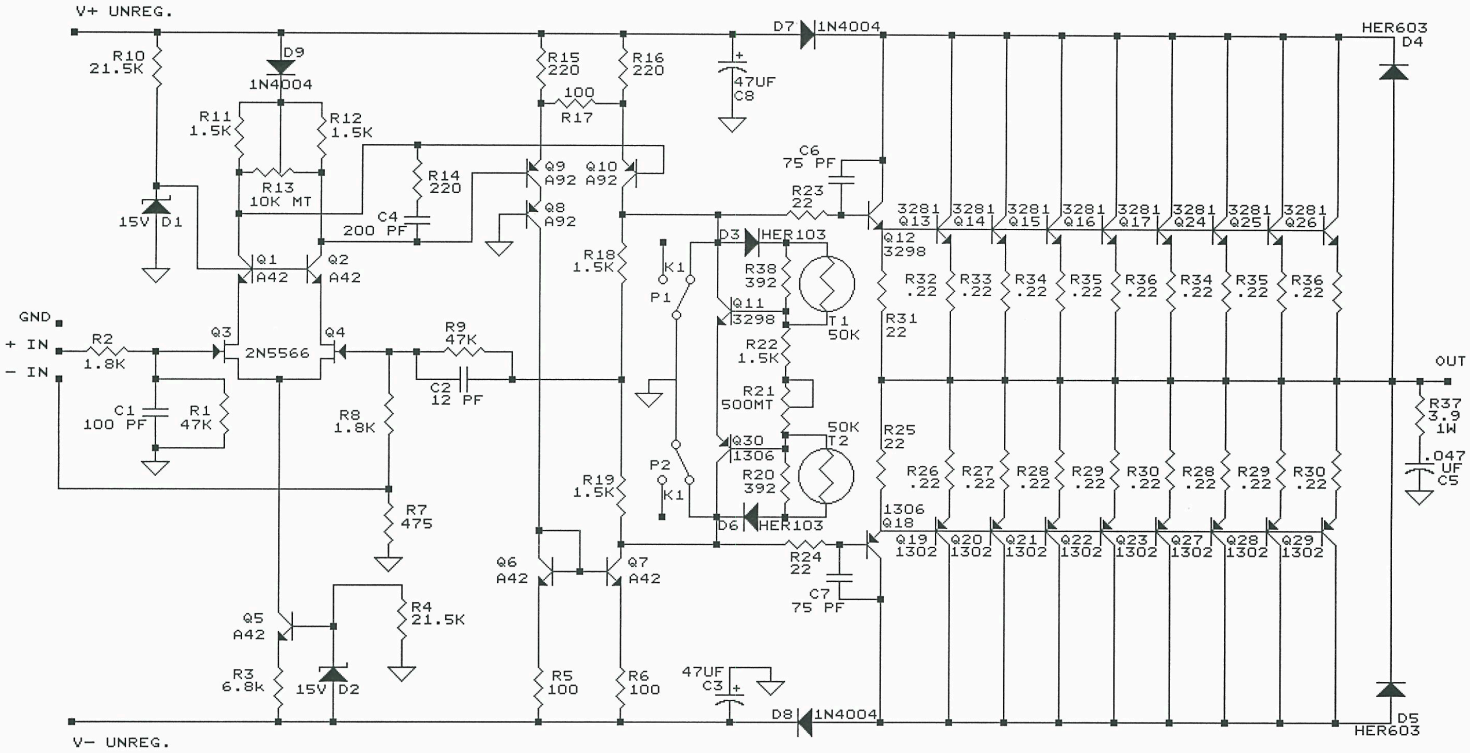

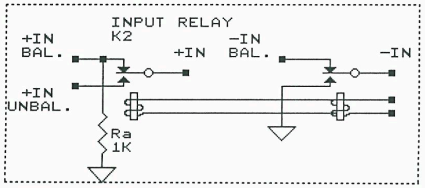

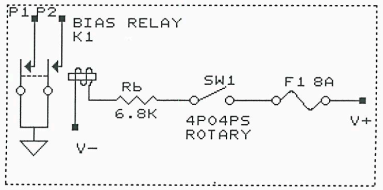

CODA Technologies, Inc.
9941 Horn Rd., Unit A
Sacramento, CA 95827-1946

Title: MODEL 10.5 AMPLIFIER

Size	Document Number	RE
B	1	A

Date: June 28, 1994 Sheet 1 of