S/M Code No.89-063 DATE OF ISSUE 8/1989-1

AIWA®

AD-WX888

SERVICE MANUAL

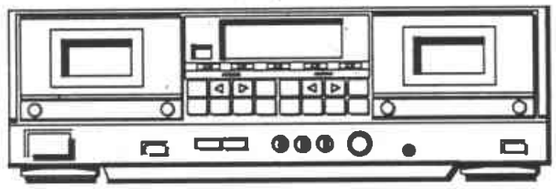

STEREO CASSETTE DECK

• BASIC TAPE MECHANISM : α-14 • TYPE. H,U,C,E,K,Z

SPECIFICATIONS

Type	Stereo cassette tape deck
Track format	4 tracks, 2 channels
Power supply	AD-WX888E, Z AC 220 V, 50/60 Hz AD-WX888K AC 240V, 50/60 Hz AD-WX888U, C AC 120 V, 60 Hz AD-WX888H AC 120 V/220 V/240 V switchable, 50/60 Hz
Power consumption	28 W
Frequency response	METAL tape: 20–18,000 Hz CrO_2 tape: 20–17,000 Hz NORMAL tape: 20–16,000 Hz
Signal-to-noise ratio	73 dB (METAL tape DOLBY C NR ON)
Wow and flutter	Deck 1 (P.B.) 0.12% (according to DIN 45500) 0.065% (WRMS) Deck 2 0.18% (according to DIN 45500) 0.065% (WRMS)
Tape speed	4.8 cm/sec. (1 7/8 ips), 9.5 cm/sec (double speed)
Recording system	AC bias (frequency 105 kHz)
Erase system	AC erase
Motor	DC servomotor × 2
Heads	Record/playback head × 1 (PC-OCC coil pure amorphous head) Playback head × 1 (PC-OCC coil pure amorphous head) Erase head × 1 (Double-gap ferite head)
Inputs	LINE IN maximum input sensitivity: 50 mV (over 50 kΩ)
Outputs	LINE OUT standard output level: 400 mV (0 VU); suitable load impedance: over 50 kΩ
Dimensions	430(W) × 140(H) × 313(D) mm
Weight	5.4 kg

- Design and specifications are subject to change without notice.
- Dolby noise reduction and HX Pro headroom extension manufactured under license from Dolby Laboratories Licensing Corporation. HX Pro originated by Bang & Olufsen.
- "Dolby", the double-D symbol, and "HX PRO" are trademarks of Dolby Laboratories Licensing Corporation.

AIWA Co., Ltd. Tokyo Japan

Printed in Japan

Cautions when servicing

The power circuit in this unit incorporates an overcurrent protector (shut-down circuit). When the overcurrent protector operates, voltages, VM, Vcc and Vref are not supplied. Once the overcurrent protector has operated, the power circuit will not be recovered automatically when is turned on, even after the cause of overcurrent is removed. Perform the following procedure to recover the power circuit.

1. Turn the power switch off.
2. Discharge C2 and C3 through a resistor of 100Ω or more. (It takes about 5 seconds to discharge C2 and C3 through a 100Ω resistor.)

Note : It takes about 90 seconds to discharge if step 2 is not performed.

Operation of Overcurrent Protector

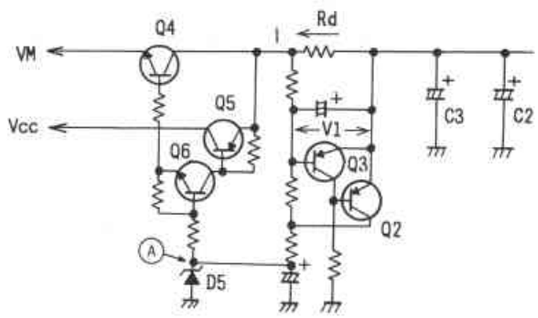

During normal operation (Q3: OFF, Q2: ON)

Since current I flowing to Rd is not large, V1 becomes lower than 0.6V and Q3 turns off. This causes Q2 to turn on, and the voltage at point Ⓐ becomes about 12V, so VM and Vcc are output.

When overcurrent occurs (Q3: ON, Q2: OFF)

When current I rises due to trouble on the VM and Vcc lines, V1 becomes higher than 0.6V and Q3 turns on. This causes Q2 to turn off, and the voltage at point Ⓐ drops abnormally, so VM or Vcc is not output.

IC BLOCK DIAGRAM

IC, CX20187

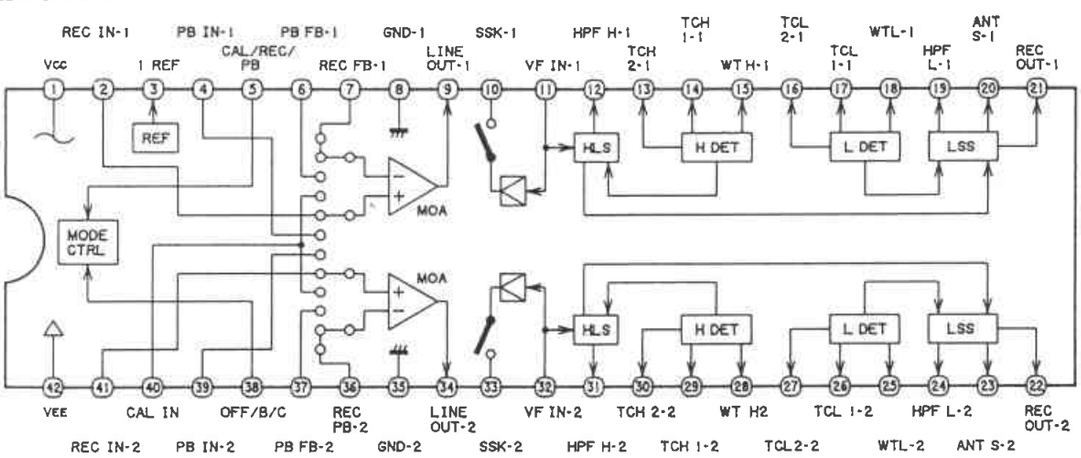

ELECTRICAL MAIN PARTS LIST

REF.NO.	PART NO.	DESCRIPTION
☰☰ IC ☰☰		
	87-001-441-019	IC,BA10358N
	87-001-440-019	IC,BA15218N
	87-001-143-019	IC,CX20187
	87-001-334-010	IC,LB9051A
	84-790-619-010	IC,LC6538D-4098
	87-020-533-019	IC,M4069UBP
	87-020-680-019	IC,NJM2068S
	87-020-758-019	IC,NJM2068SD
	87-020-908-019	IC,NJM4066BD
☰☰ TRANSISTOR ☰☰		
	89-503-735-019	FET,2SK373GR
	87-026-463-019	TRANSISTOR,2SA933SR
	89-109-521-019	TRANSISTOR,2SA952K
	89-110-155-019	TRANSISTOR,2SA1015GR
	89-112-965-019	TRANSISTOR,2SA1296GR
	89-210-154-019	TRANSISTOR,2SB1015Y
	87-026-462-019	TRANSISTOR,2SC1740S,SR
	89-318-155-019	TRANSISTOR,2SC1815GR
	89-318-156-019	TRANSISTOR,2SC1815BL
	89-320-011-019	TRANSISTOR,2SC2001K
	89-331-130-019	TRANSISTOR,2SC3113
	89-413-023-019	TRANSISTOR,2SD1302S
	89-414-065-019	TRANSISTOR,2SD1406GR
	87-026-200-019	TRANSISTOR,DTC114ES
	87-026-379-010	TRANSISTOR,RN2206
☰☰ DIODE ☰☰		
	87-001-783-019	DIODE,1N4002
	87-020-691-019	DIODE,1SS132
	87-020-123-019	DIODE,DS446
	87-001-820-010	DIODE,GP15B(F)
	87-027-676-019	DIODE,ZENER HZ12B3L
	87-027-391-019	DIODE,ZENER HZ36-2
	87-027-301-019	DIODE,ZENER HZ3A1
	87-027-286-019	DIODE,ZENER HZ5C1
	87-027-649-019	DIODE,ZENER HZ7A2
	87-027-321-019	DIODE,ZENER HZ9B2
	87-027-584-019	DIODE,ZENER HZ9C1L
☰☰ MAIN CIRCUIT BOARD SECTION ☰☰		
C1	★87-010-400-019	CAP,ELECT 0.47-50V SME
C2	★87-010-390-019	CAP,ELECT 3300-25V SME
C3	★87-010-390-019	CAP,ELECT 3300-25V SME
C4	★87-010-405-019	CAP,ELECT 10-50V SME
C5	★87-010-384-019	CAP,ELECT 100-25V
C6	★87-010-644-019	CAP,ELECT 470-16V MUSE
C7	★87-010-263-019	CAP,ELECT 100-10V
C8	★87-010-644-019	CAP,ELECT 470-16V MUSE
C9	★87-010-237-019	CAP,ELECT 1000-16V SME
C11	★87-015-406-019	CAP,ELECT 100-100V
C13	★87-010-405-019	CAP,ELECT 10-50V SME
C14	★87-010-408-019	CAP,ELECT 47-50VX
C103	★87-018-120-019	CAP,CERA 120P
C104	★87-018-120-019	CAP,CERA 120P
C109	★87-018-126-019	CAP,CERA SS 390P
C110	★87-018-126-019	CAP,CERA SS 390P
C111	★87-010-679-019	CAP,ELECT 10-16V KS
C112	★87-010-679-019	CAP,ELECT 10-16V KS
C113	★87-010-679-019	CAP,ELECT 10-16V KS
C114	★87-010-679-019	CAP,ELECT 10-16V KS
C117	★87-018-134-019	CAP,CERA SS 0.01
C201	★87-018-121-019	CAP,CERA SS 150P
C202	★87-018-121-019	CAP,CERA SS 150P
C203	★87-018-120-019	CAP,CERA SS 120P
C204	★87-018-120-019	CAP,CERA SS 120P
C209	★87-018-126-019	CAP,CERA SS 390P
C210	★87-018-126-019	CAP,CERA SS 390P
C211	★87-010-679-019	CAP,ELECT 10-16V KS
C212	★87-010-679-019	CAP,ELECT 10-16V KS
C213	★87-010-679-019	CAP,ELECT 10-16V KS
C214	★87-010-679-019	CAP,ELECT 10-16V KS
C217	★87-018-134-019	CAP,CERA SS 0.01
C405	★87-018-199-019	CAP,CERA SS 3300P
C406	★87-018-199-019	CAP,CERA SS 3300P
C413	★87-018-197-019	CAP,CERA SS 1800P
C414	★87-018-197-019	CAP,CERA SS 1800P
C421	★87-010-404-019	CAP,ELECT 4.7-50V SME
C422	★87-010-404-019	CAP,ELECT 4.7-50V SME
C423	★87-018-132-019	CAP,CERA SS 2200P
C424	★87-018-132-019	CAP,CERA SS 2200P
C425	★87-018-119-019	CAP,CERA SS 100P
C426	★87-018-119-019	CAP,CERA SS 100P
C471	★87-010-408-019	CAP,ELECT 47-50VX
C472	★87-010-401-019	CAP,ELECT 1-50V
C473	★87-010-381-019	CAP,ELECT 330-16V SME
C475	★87-018-133-019	CAP,CERA SS 4700P
C478	★87-014-077-010	CAP,PP 6800P
C479	★87-018-131-019	CAP,CERA SS 1000P
C601	★87-018-131-019	CAP,CERA SS 1000P
C602	★87-018-131-019	CAP,CERA SS 1000P
C607	★87-018-134-019	CAP,CERA SS 0.01
C608	★87-018-134-019	CAP,CERA SS 0.01
C611	★87-018-130-019	CAP,CERA 820P
C612	★87-018-130-019	CAP,CERA 820P
C615	★87-018-121-019	CAP,CERA SS 150P
C616	★87-018-121-019	CAP,CERA SS 150P
C617	★87-010-260-019	CAP,ELECT 47-25V
C618	★87-010-263-019	CAP,ELECT 100-10V
C701	★87-010-405-019	CAP,ELECT 10-50V SME
C702	★87-010-405-019	CAP,ELECT 10-50V SME
C703	★87-018-133-019	CAP,CERA SS 4700P
C704	★87-018-133-019	CAP,CERA SS 4700P
C711	★87-010-400-019	CAP,ELECT 0.47-50V SME
C712	★87-010-400-019	CAP,ELECT 0.47-50V SME
C713	★87-010-677-019	CAP,ELECT 0.15-50V SRA
C714	★87-010-677-019	CAP,ELECT 0.15-50V SRA
C717	★87-010-545-019	CAP,ELECT 0.22-50V SME
C718	★87-010-545-019	CAP,ELECT 0.22-50V SME
C731	★87-010-404-019	CAP,ELECT 4.7-50V SME
C732	★87-010-404-019	CAP,ELECT 4.7-50V SME
C751	★87-015-242-019	CAP,ELECT 2.2-50V LL
C752	★87-015-242-019	CAP,ELECT 2.2-50V LL
C761	★87-010-404-019	CAP,ELECT 4.7-50V SME
C762	★87-010-404-019	CAP,ELECT 4.7-50V SME
C763	★87-010-401-019	CAP,ELECT 1-50V
C764	★87-010-401-019	CAP,ELECT 1-50V
C765	★87-010-263-019	CAP,ELECT 100-10V
C766	★87-010-263-019	CAP,ELECT 100-10V
C767	★87-018-209-019	CAP,CERA SS 0.1
C807	★87-010-252-019	CAP,ELECT 1000-6.3V
C808	★87-018-134-019	CAP,CERA SS 0.01
C809	★87-010-401-019	CAP,ELECT 1-50V
C812	★87-010-402-019	CAP,ELECT 2.2-50V SME
C813	★87-010-382-019	CAP,ELECT 22-25V SME
C814	★87-010-402-019	CAP,ELECT 2.2-50V SME

REF.NO.	PART NO.	DESCRIPTION
C815	*87-010-382-019	CAP,ELECT 22-25V SME
C816	*87-010-565-019	CAP,ELECT 470-12V SME
C817	*87-010-565-019	CAP,ELECT 470-12V SME
C818	*87-010-565-019	CAP,ELECT 470-12V SME
C819	*87-010-565-019	CAP,ELECT 470-12V SME
C821	*87-010-401-019	CAP,ELECT 1-50V
C822	*87-010-401-019	CAP,ELECT 1-50V
C823	*87-010-402-019	CAP,ELECT 2.2-50V SME
C825	*87-010-260-019	CAP,ELECT 47-25V
C826	*87-010-385-019	CAP,ELECT 220-25V
C902	*87-010-384-019	CAP,ELECT 100-25V
CF801	87-030-167-019	CERA LOCK CST4.0 MHZ
⚠ FR1	87-029-017-010	RES,FUSE 1/4W 10 (EXCEPT U)
J761	84-790-635-019	JACK,6.3(PHONES)
L401	*87-003-128-019	MICRO INDUCTOR 5.6 MMH
L402	*87-003-128-019	MICRO INDUCTOR 5.6 MMH
L403	*87-003-131-019	MICRO INDUCTOR 10 MMH
L404	*87-003-131-019	MICRO INDUCTOR 10 MMH
L405	*82-231-622-010	COIL,22 MMH-J
L406	*82-231-622-010	COIL,22 MMH-J
L471	*84-790-621-010	COIL,BIAS 105K AMO
L601	*84-790-622-010	COIL,HX105K AMO
L602	*84-790-622-010	COIL,HX105K AMO
L701	*84-790-623-019	FILTER,DOLBY LPF 105K
L702	*84-790-623-019	FILTER,DOLBY LPF 105K
L703	*82-231-622-010	COIL,22 MMH-J
L704	*82-231-622-010	COIL,22 MMH-J
⚠ R936	87-025-338-010	RES,MO 2.2-1W(U)
SFR101	*87-024-168-019	SFR,1K
SFR102	*87-024-168-019	SFR,1K
SFR201	*87-024-168-019	SFR,1K
SFR202	*87-024-168-019	SFR,1K
SFR401	*87-024-169-019	SFR,2.2K
SFR402	*87-024-169-019	SFR,2.2K
SFR601	*87-024-176-019	SFR,100K
SFR602	*87-024-176-019	SFR,100K
SFR801	*87-024-177-019	SFR,220K
VR551	84-790-632-019	VR,250KB(BIAS FINE)(D1)
VR651	84-790-632-019	VR,250KB(BIAS FINE)(D2)
VR751	84-790-631-019	VR,100KW(BALANCE)
VR752	84-790-630-019	VR,50KA(REC LEVEL)

=== FRONT CIRCUIT BOARD SECTION ===

REF.NO.	PART NO.	DESCRIPTION
C901	*87-010-234-019	CAP,ELECT 47-16V SRE
FL1	84-790-620-010	FL,CP5387 GR(METER/COUNTER)
LED901	87-001-745-010	LED,SEL1324G(PLAY)(D2)
LED902	84-792-625-019	LED,SLH-38YC,H15.5(PAUSE)(D2)
LED904	84-792-624-019	LED,SLH-38VC,H15.5(DUAL REC/HIGH)
LED905	87-001-745-010	LED,SEL1324G(PLAY)(D1)
LED906	84-792-624-019	LED,SLH-38VC,H15.5(REC/REC MUTE)(D2)
LED908	84-792-624-019	LED,SLH-38VC,H15.5(SYNC.DUBB.NORMAL)
S901	87-036-170-019	TACT SW(▷)(D1)
S902	87-036-170-019	TACT SW(◁)(D1)
S903	87-036-170-019	TACT SW(▷▷)(D1)
S904	87-036-170-019	TACT SW(◁◁)(D1)
S905	87-036-170-019	TACT SW(STOP)(D1)
S908	87-036-170-019	TACT SW(SYNC.DUBB.NORMAL)
S909	87-036-170-019	TACT SW(▷)(D2)
S910	87-036-170-019	TACT SW(◁)(D2)
S911	87-036-170-019	TACT SW(▷▷)(D2)
S912	87-036-170-019	TACT SW(◁◁)(D2)
S913	87-036-170-019	TACT SW(STOP)(D2)
S914	87-031-863-019	TACT SW(PAUSE)(D2)
S915	87-031-863-019	TACT SW(REC/REC MUTE)(D2)
S916	87-036-170-019	TACT SW(SYNC.DUBB.HIGH)
S917	87-036-170-019	TACT SW(COUNTER RESET)(D1)
S918	87-036-170-019	TACT SW(COUNTER RESET)(D2)
S920	84-790-637-019	SLIDE SW(TIMER)
S921	84-790-637-019	SLIDE SW(STSD)
S922	84-790-637-019	SLIDE SW(DOLBY NR)

=== PIN JACK CIRCUIT BOARD SECTION ===

REF.NO.	PART NO.	DESCRIPTION
C753	*87-018-134-019	CAP,CERA SS 0.01
J751	87-009-023-019	JACK PIN(R/LINE IN,P/LINE OUT)

=== DECK-1 CIRCUIT BOARD SECTION ===

REF.NO.	PART NO.	DESCRIPTION
S1	87-036-109-010	PUSH SW SPPB61(CAST)
S2	87-036-110-010	PUSH SW SPPB62(CRO2)
SFR1	*87-024-291-019	SFR,4.7K
SFR2	*87-024-291-010	SFR,4.7K
SOL1	*86-535-611-210	SOL,X-3 PL(PLAY)
SOL2	*86-535-612-210	SOL,X-3 FR(FRP)

=== DECK-2 CIRCUIT BOARD SECTION ===

REF.NO.	PART NO.	DESCRIPTION
S1	87-036-109-010	PUSH SW SPPB61(CAST)
S2	87-036-110-010	PUSH SW SPPB62(CRO2)
S3	87-036-110-010	PUSH SW SPPB62(REA)
S4	87-036-109-010	PUSH SW SPPB61(REB)
S5	87-036-109-010	PUSH SW SPPB61(METAL)
SFR1	*87-024-291-019	SFR,4.7K
SFR2	*87-024-291-019	SFR,4.7K
SOL1	*86-535-611-210	SOL,X-3 PL(PLAY)
SOL2	*86-535-612-210	SOL,X-3 FR(FRP)

=== SENSOR-1 CIRCUIT BOARD SECTION ===

REF.NO.	PART NO.	DESCRIPTION
CP1	87-001-367-019	PHOTO,SPI-315(O)CD

=== SENSOR-2 CIRCUIT BOARD SECTION ===

REF.NO.	PART NO.	DESCRIPTION
CP1	87-001-367-019	PHOTO,SPI-315(O)CD

=== RELAY-1 CIRCUIT BOARD SECTION ===

=== RELAY-2 CIRCUIT BOARD SECTION ===

=== POWER CIRCUIT BOARD SECTION ===

REF.NO.	PART NO.	DESCRIPTION
⚠	87-033-147-019	FUSE CLAMP(EXCEPT U,C)
⚠ C15	*87-019-112-019	CAP,LINE 0.01E
⚠ FU1	87-035-191-019	FUSE,3.15A 250V T E(H,E,K,Z)
⚠ FU1	87-035-367-010	FUSE,3.15A 250V T E(H,E,K,Z)
⚠ PT1	84-790-611-019	POWER TRANSFORMER H(H)
⚠ PT1	84-790-612-019	POWER TRANSFORMER U,C(U,C)
⚠ PT1	84-790-613-019	POWER TRANSFORMER E,Z(E,Z)
⚠ PT1	84-790-614-019	POWER TRANSFORMER K,G(K)
⚠ S1	87-036-015-019	PUSH SW(POWER)
⚠ S2	87-036-136-019	ROTARY SW(VOLTAGE SELECTOR)(H)

=== MISCELLANEOUS ===

REF.NO.	PART NO.	DESCRIPTION
⚠	*82-187-796-019	AC CORD (BS)(K)
⚠	*82-187-797-019	AC CORD (E)(E,Z)
⚠	*87-034-584-019	AC CORD (U)SPT-2(U,C)
⚠	*87-034-749-019	AC CORD (H) W/PLUG(H)
⚠	*87-085-184-010	AC CORD BUSHING D(H)
⚠	*87-085-185-010	AC CORD BUSHING E(E,K,Z)
⚠	*87-085-189-010	AC CORD BUSHING (SPT-2)(U,C)

REF.NO.	PART NO.	DESCRIPTION
M1	87-045-273-019	MOTOR,MMI6HLWC1(D1)
M2	87-045-235-010	MOTOR,MMA6B2LW(D2)
PH	87-046-326-010	HEAD,PH(D1)
RPEH	87-046-325-010	HEAD,RPEH(D2)

2SA933
2SA952
2SA1015
2SA1296
2SC1740
2SC1815
2SC2001
2SD1302

2SC3113
DTC114
RN2206

2SK373

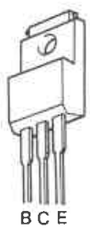

2SB1015
2SD1406

MATRIX TABLE

	DISPLAY SECTION											
	S0	S1	S2	S3	S4	S5	S6	S7	S8	S9	S10	S11
T0	DECK1 10^3 7 SEG.			DECK1	DECK2		NOR DUB.		DECK1 10^3 7 SEG.			
T1	DECK1 10^2 7 SEG.			PLAY	REC RMT	---	LED	---	DECK1 10^2 7 SEG.			
T2	DECK1 10^1 7 SEG.			LED	LED				DECK1 10^1 7 SEG.			
T3	DECK1 10^0 7 SEG.			D1:<	D1:>	(B)	(C)	---	DECK1 10^0 7 SEG.			
T4	DECK2 10^3 7 SEG.			---	---	D2:<	D2:>	---	DECK2 10^3 7 SEG.			
T5	DECK2 10^2 7 SEG.			DECK2	DECK2		HI DUB		DECK2 10^2 7 SEG.			
T6	DECK2 10^1 7 SEG.			PLAY	PAUSE	---	LED	---	DECK2 10^1 7 SEG.			
T7	DECK2 10^0 7 SEG.			LED	LED				DECK2 10^0 7 SEG.			
T8	LOWER ---------- 12 POINT PEAK HOLD METER / LEFT ---------- HIGHER											
T9	LOWER ---------- 12 POINT PEAK HOLD METER / RIGHT ---------- HIGHER											

	INPUT SECTION			
	DT0	DT1	DT2	DT3
T0	FWD PLAY/D1	REV PLAY/D1	>>/D1	<<</D1
T1	STOP/D1	---	---	NOR DUB.
T2	FWD PLAY/D2	REV PLAY/D2	>>/D2	>>/D2
T3	STOP/D2	PAUSE/D2	REC/RMT/D2	HI DUB.
T4	RESET/D1	RESET/D2	---	---
T5	TIMER REC	TIMER PLAY	ONE WAY MODE	REVERSE MODE
T6	DOLBY C	DOLBY B	---	BLANK SKIP
T7	---	---	---	CST/D1
T8	RE-A/D2	RE-B/D2	---	CST/D2
T9	---	MODE:D2	---	---

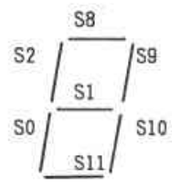

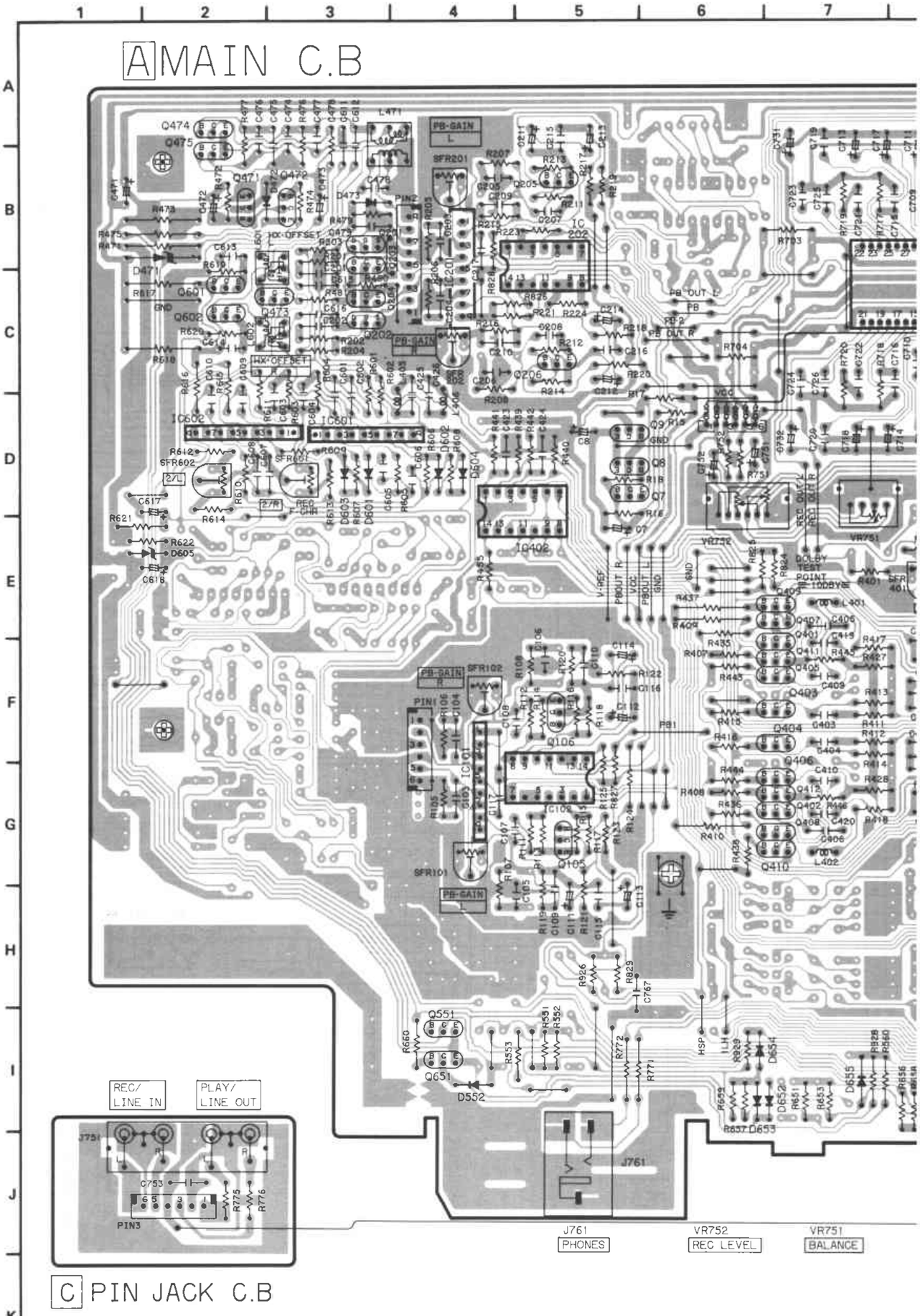
A MAIN C.B
REC/ LINE IN
PLAY/ LINE OUT
J751
PIN3
J761
PHONES
VR752
REC LEVEL
VR751
BALANCE

C PIN JACK C.B

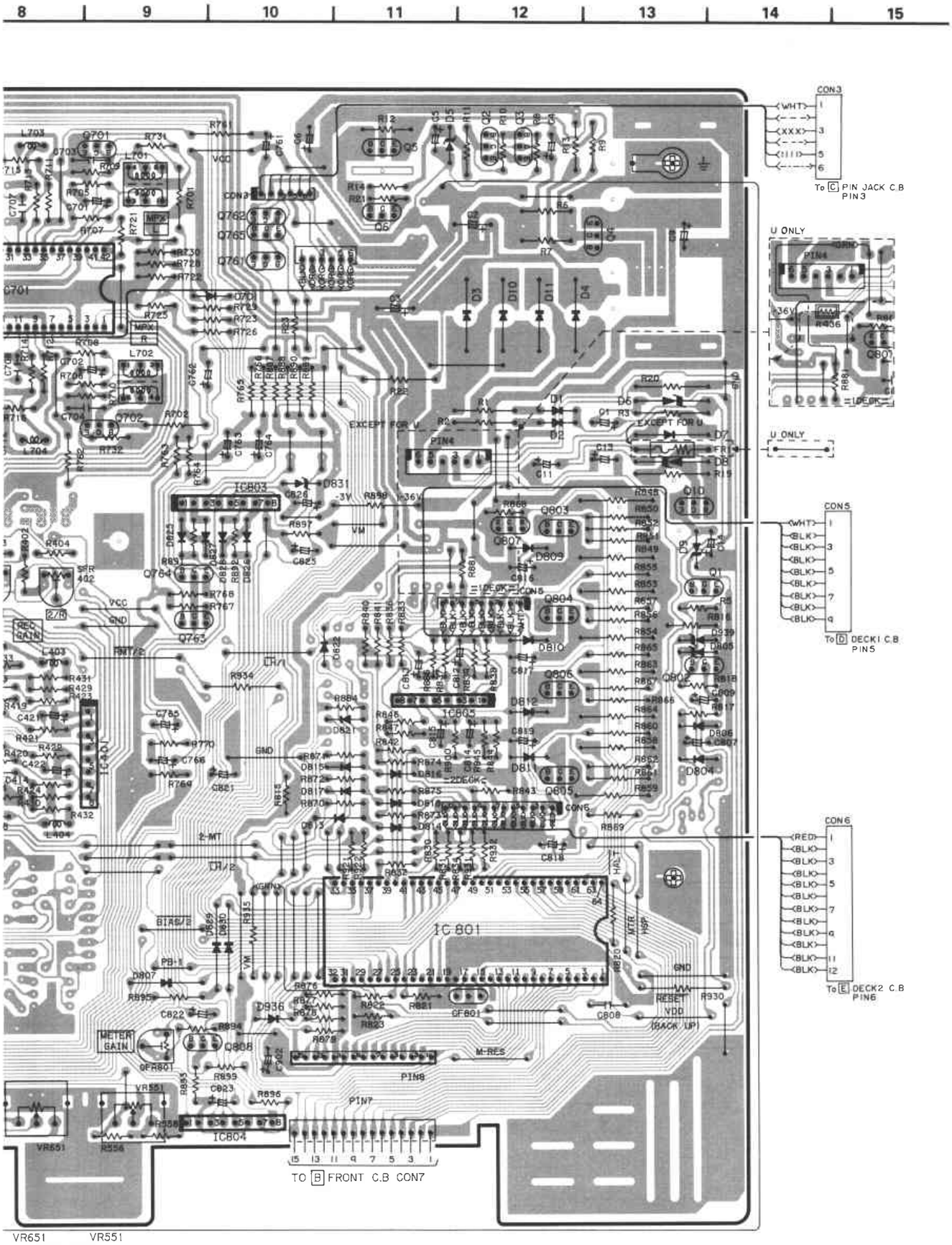
8
9
10
11
12
13
14
15
CON3
To C PIN JACK C.B PIN3
U ONLY
CON5
To D DECK1 C.B PIN5
CON6
To E DECK2 C.B PIN6
IC801
IC803
IC804
IC805
PIN4
PIN7
PIN8
TO B FRONT C.B CON7
VR651
VR551
BIAS FINE
(NORMAL/Cr O2)
DECK 2
DECK 1

BLOCK DIAGRAM

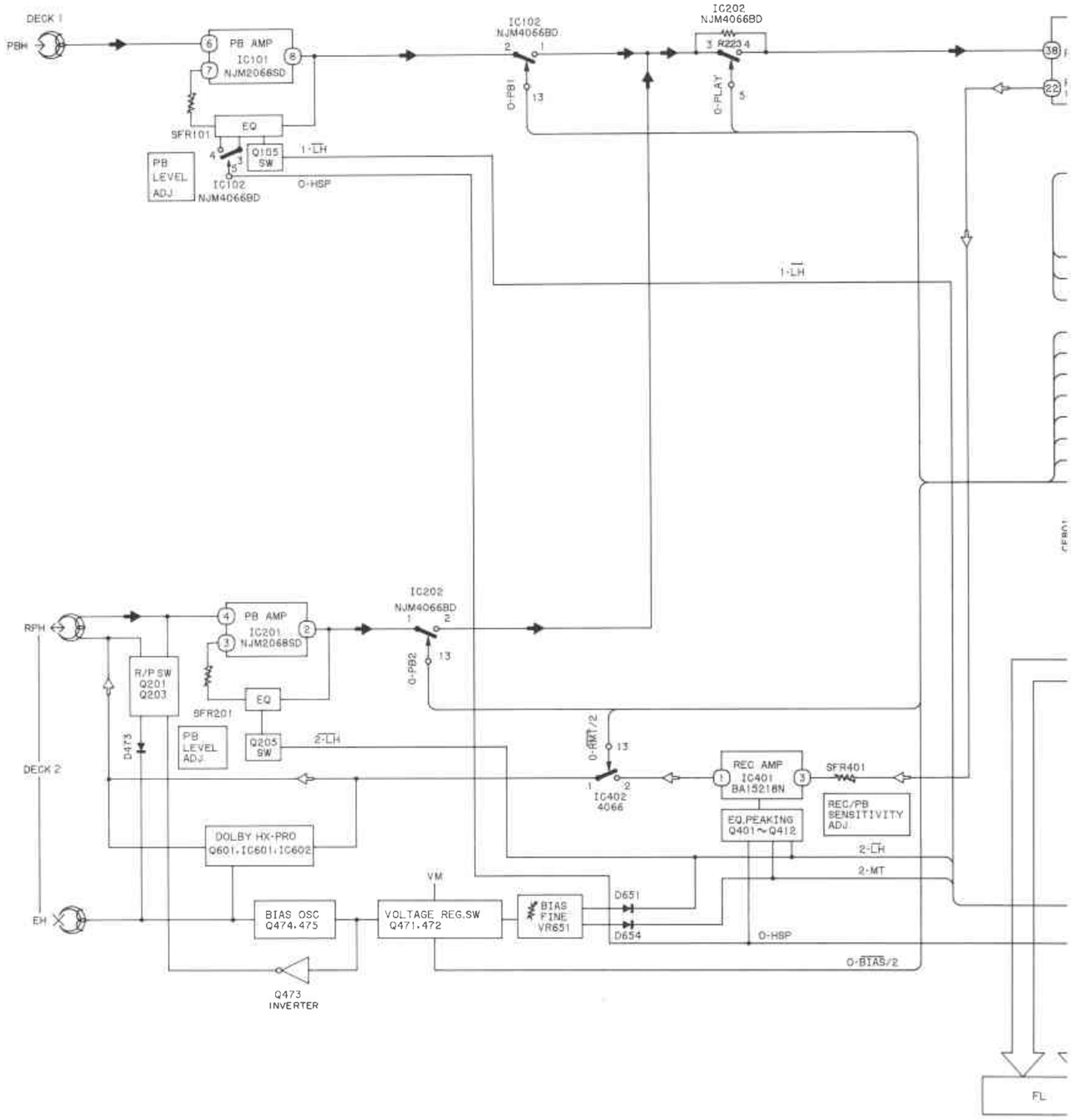

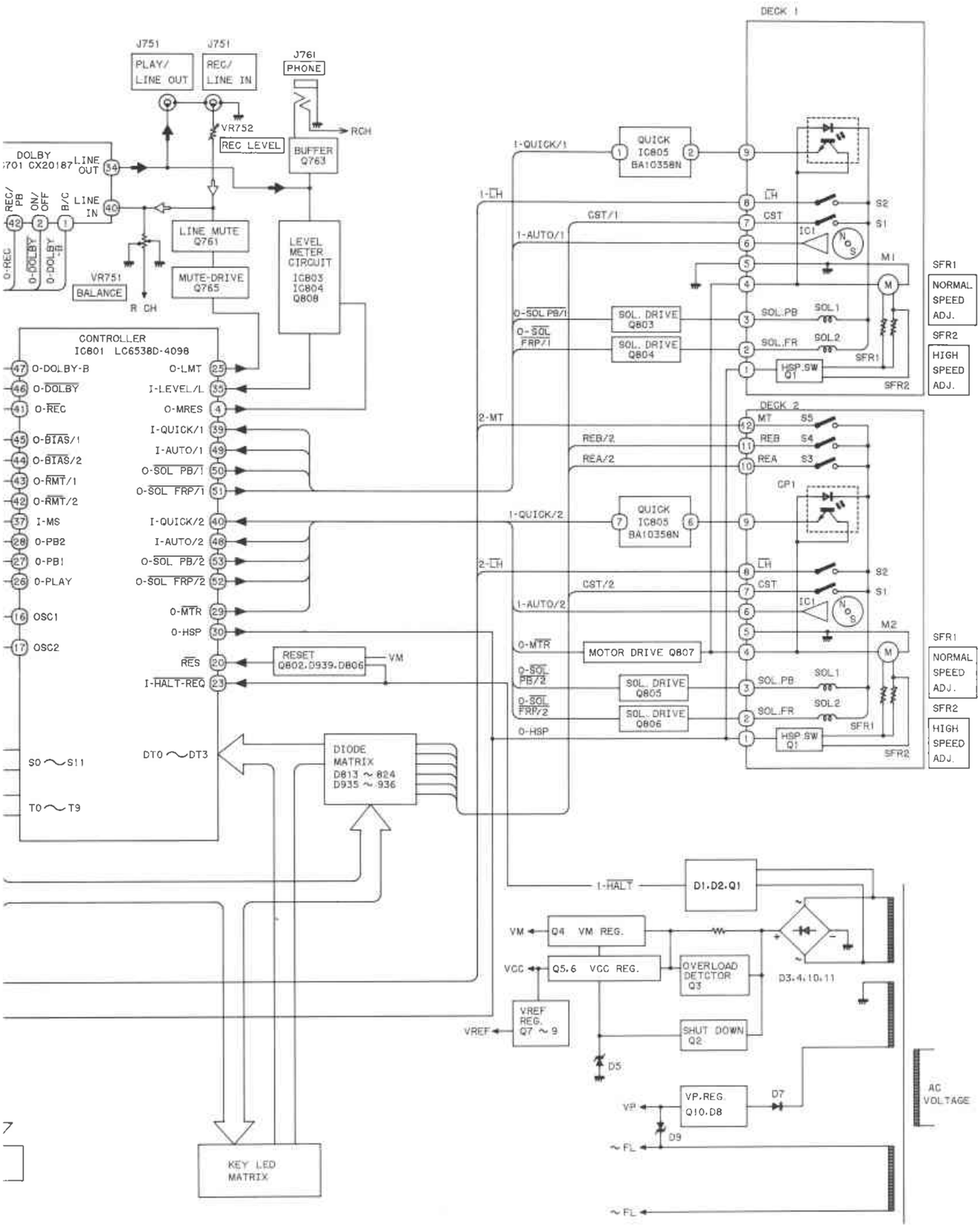
J751
PLAY/ LINE OUT
J751
REC/ LINE IN
J761
PHONE
VR752
REC LEVEL
RCH
BUFFER Q763
DOLBY IC701 CX20187
LINE OUT
LINE IN
REC/ PB
ON/ OFF
B/C
O-REC
O-DOLBY
O-DOLBY-B
LINE MUTE Q761
MUTE-DRIVE Q765
LEVEL METER CIRCUIT IC803 IC804 Q808
VR751 BALANCE
R CH
CONTROLLER IC801 LC6538D-4098
O-DOLBY-B
O-DOLBY
O-REC
O-BIAS/1
O-BIAS/2
O-RMT/1
O-RMT/2
I-MS
O-PB2
O-PB1
O-PLAY
OSC1
OSC2
O-LMT
I-LEVEL/L
O-MRES
I-QUICK/1
I-AUTO/1
O-SOL PB/1
O-SOL FRP/1
I-QUICK/2
I-AUTO/2
O-SOL PB/2
O-SOL FRP/2
O-MTR
O-HSP
RES
I-HALT-REQ
RESET Q802.D939.D806
VM
S0 ~ S11
T0 ~ T9
DT0 ~ DT3
DIODE MATRIX D813 ~ 824 D935 ~ 936
KEY LED MATRIX
DECK 1
QUICK IC805 BA10358N
SOL. DRIVE Q803
SOL. DRIVE Q804
HSP.SW Q1
M1
SFR1
NORMAL SPEED ADJ.
SFR2
HIGH SPEED ADJ.
DECK 2
QUICK IC805 BA10358N
MOTOR DRIVE Q807
SOL. DRIVE Q805
SOL. DRIVE Q806
M2
D1.D2.Q1
Q4 VM REG.
Q5.6 VCC REG.
OVERLOAD DETCTOR Q3
D3.4.10.11
VREF REG. Q7 ~ 9
SHUT DOWN Q2
D5
VP.REG Q10.D8
D7
D9
AC VOLTAGE
~FL

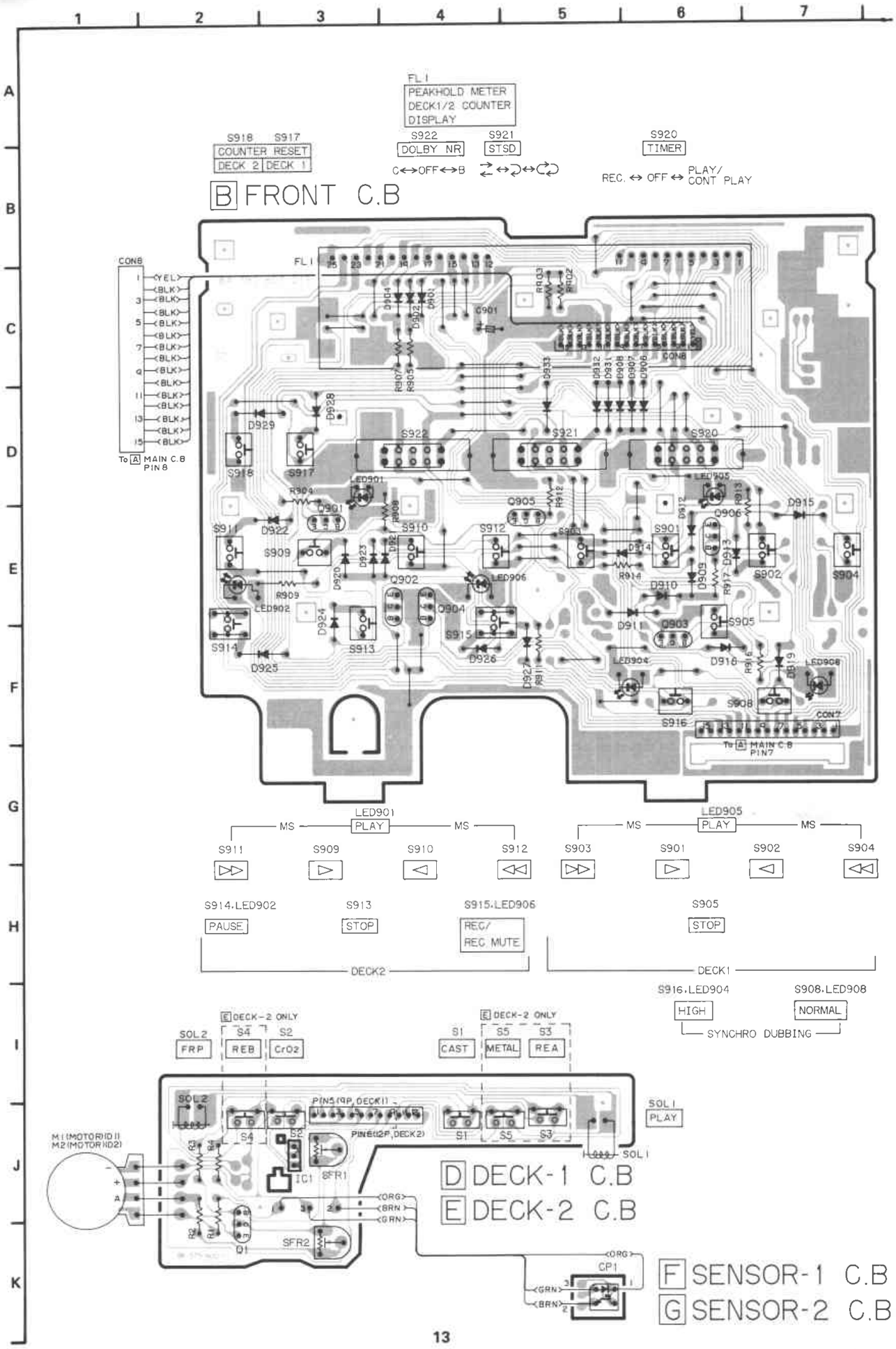
FL1
PEAKHOLD METER
DECK1/2 COUNTER
DISPLAY
S918 S917
COUNTER RESET
DECK 2 DECK 1
S922
DOLBY NR
S921
STSD
C↔OFF↔B
S920
TIMER
REC. ↔ OFF ↔ PLAY/CONT PLAY
B FRONT C.B
CON8
To A MAIN C.B PIN 8
LED901
PLAY
MS
LED905
S911
S909
S910
S912
S903
S901
S902
S904
S914.LED902
PAUSE
S913
STOP
S915.LED906
REC/
REC MUTE
S905
STOP
DECK2
DECK1
S916.LED904
HIGH
S908.LED908
NORMAL
SYNCHRO DUBBING
E DECK-2 ONLY
SOL2
FRP
S4
REB
S2
CrO2
S1
CAST
S5
METAL
S3
REA
SOL1
PLAY
PIN5(9P,DECK1)
PIN6(12P,DECK2)
M1(MOTOR ID1)
M2(MOTOR ID2)
D DECK-1 C.B
E DECK-2 C.B
CP1
F SENSOR-1 C.B
G SENSOR-2 C.B

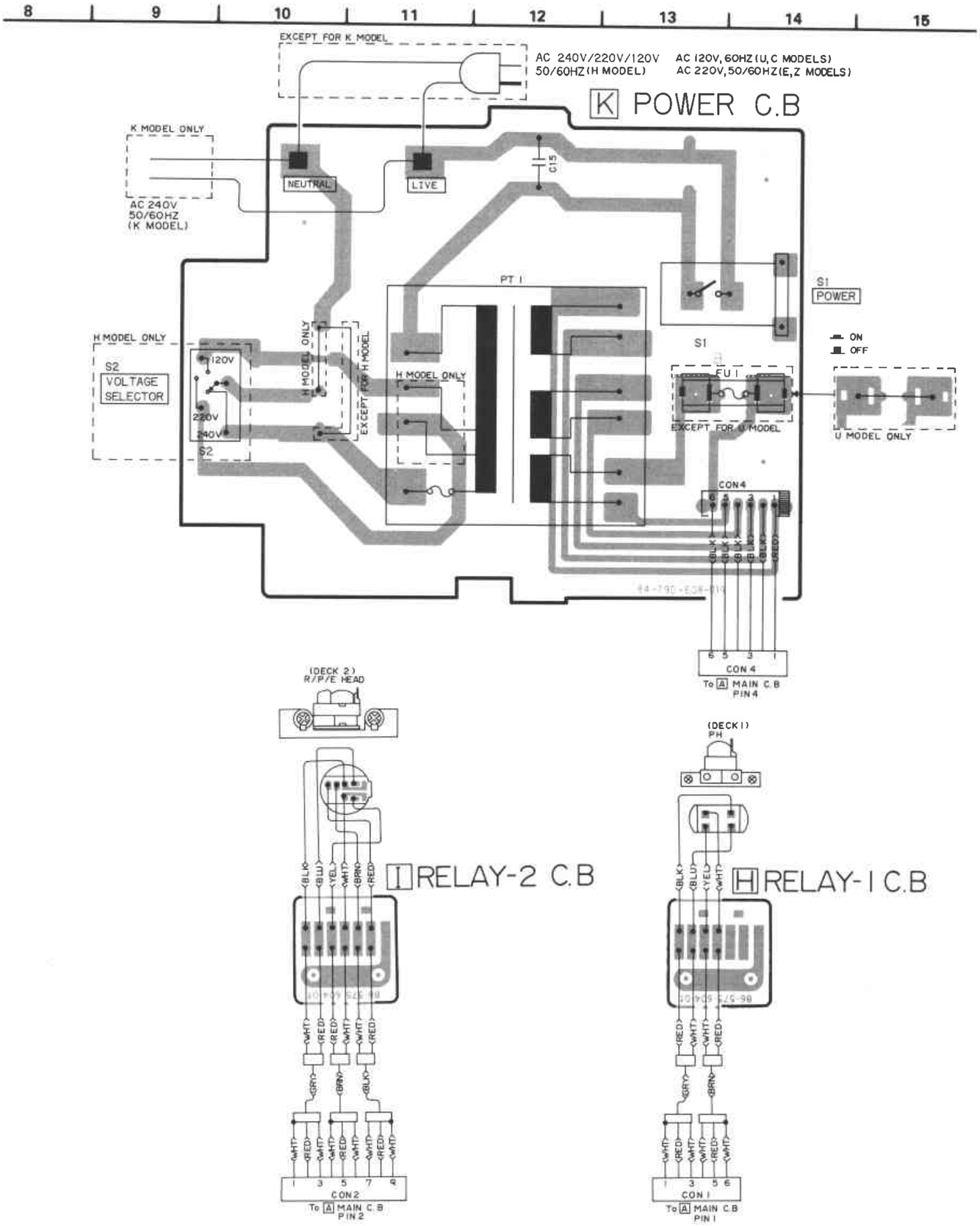
8
9
10
11
12
13
14
15
EXCEPT FOR K MODEL
AC 240V/220V/120V
50/60HZ(H MODEL)
AC 120V, 60HZ(U,C MODELS)
AC 220V,50/60HZ(E,Z MODELS)
K POWER C.B
K MODEL ONLY
AC 240V
50/60HZ
(K MODEL)
NEUTRAL
LIVE
C15
PT 1
S1
POWER
ON
OFF
H MODEL ONLY
S2
VOLTAGE
SELECTOR
120V
220V
240V
S2
H MODEL ONLY
EXCEPT FOR H MODEL
H MODEL ONLY
S1
FU 1
EXCEPT FOR U MODEL
U MODEL ONLY
CON4
BLK
BLK
BLK
BLK
BLK
RED
6 5 3 1
CON 4
To A MAIN C.B
PIN4
(DECK 2)
R/P/E HEAD
I RELAY-2 C.B
BLK
BLU
YEL
WHT
BRN
RED
WHT
RED
RED
WHT
WHT
RED
GRY
BRN
BLK
WHT
RED
WHT
RED
WHT
RED
WHT
RED
WHT
1 3 5 7 9
CON2
To A MAIN C.B
PIN2
(DECK 1)
PH
H RELAY-1 C.B
BLK
BLU
YEL
WHT
RED
WHT
WHT
RED
GRY
BRN
WHT
RED
WHT
WHT
RED
WHT
1 3 5 6
CON 1
To A MAIN C.B
PIN 1

SCHEMATIC DIAGRAM－1

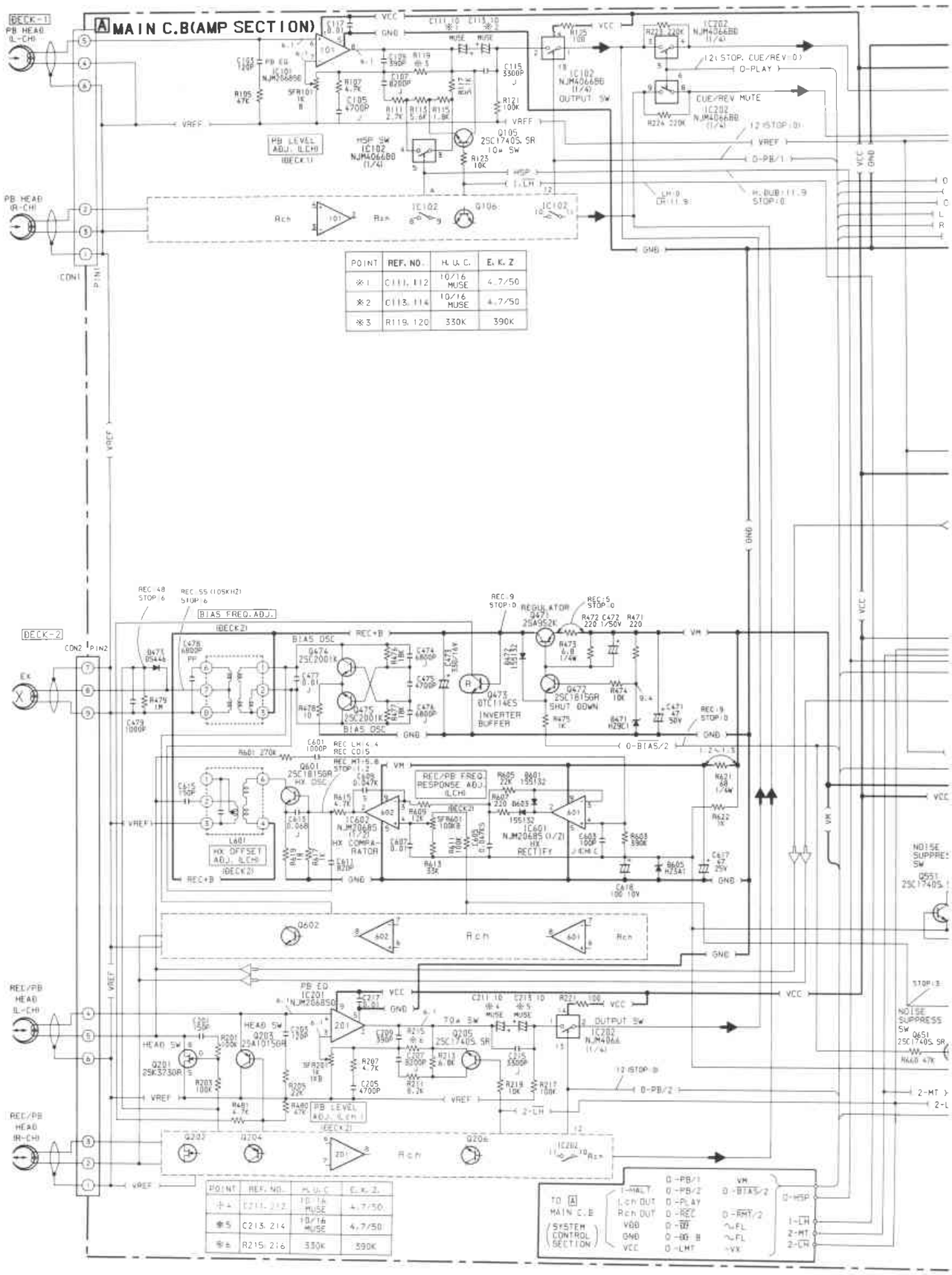

POINT	REF. NO.	H. U. C.	E. K. Z
※1	C111, 112	10/16 MUSE	4.7/50
※2	C113, 114	10/16 MUSE	4.7/50
※3	R119, 120	330K	390K

POINT	REF. NO.	H. U. C.	E. K. Z.
※4	C211, 212	10/16 MUSE	4.7/50
※5	C213, 214	10/16 MUSE	4.7/50
※6	R215, 216	330K	390K

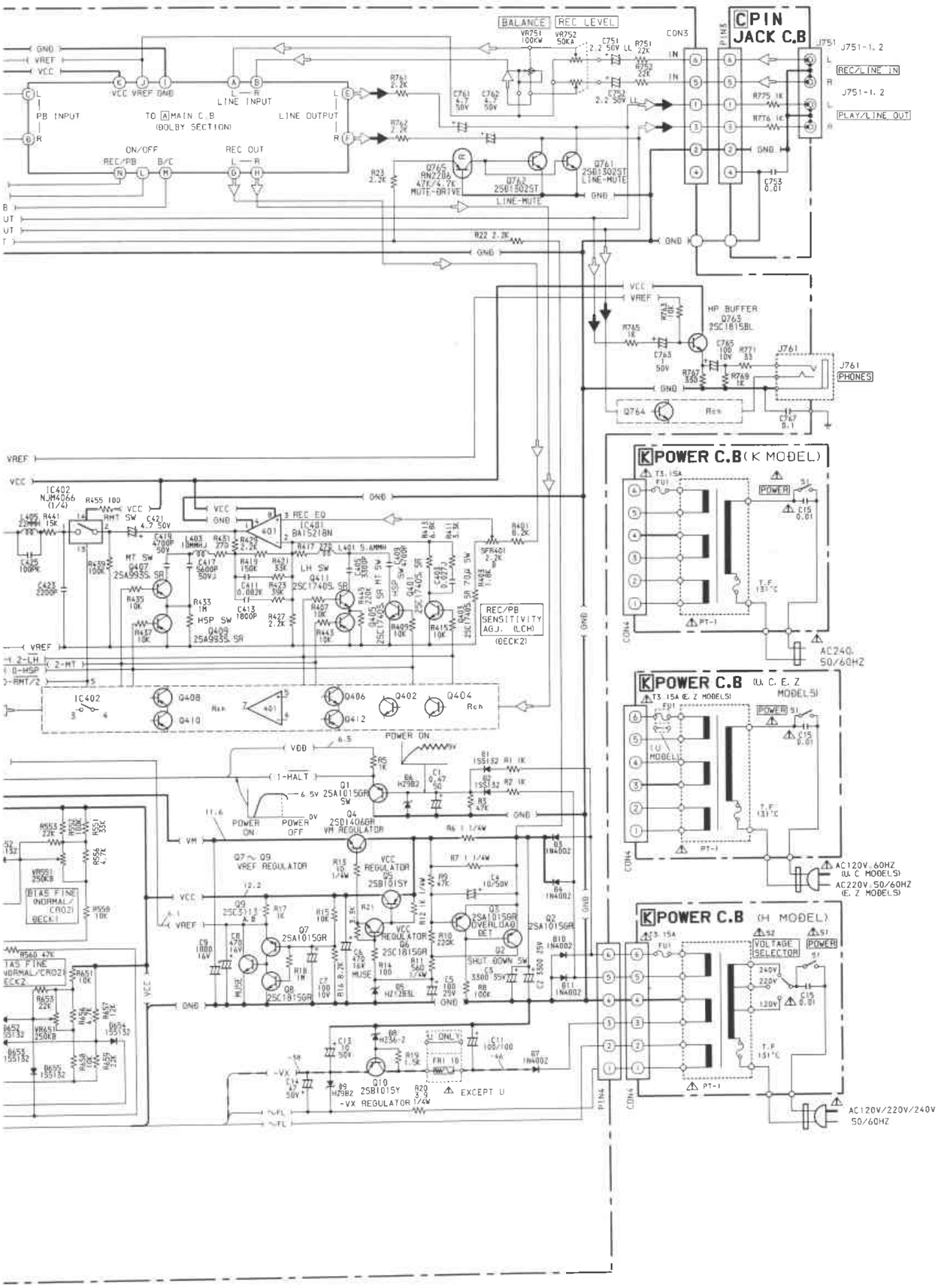
C PIN JACK C.B
BALANCE
REC LEVEL
J751-1, 2
REC/LINE IN
PLAY/LINE OUT
PB INPUT
TO A MAIN C.B (DOLBY SECTION)
LINE INPUT
LINE OUTPUT
ON/OFF
REC OUT
HP BUFFER
J761
PHONES
K POWER C.B (K MODEL)
K POWER C.B (U, C, E, Z MODELS)
K POWER C.B (H MODEL)
AC240V 50/60HZ
AC120V 60HZ (U, C MODELS)
AC220V 50/60HZ (E, Z MODELS)
AC120V/220V/240V 50/60HZ
REC/PB SENSITIVITY ADJ. (LCH)
POWER ON
POWER OFF
VOLTAGE SELECTOR
EXCEPT U

IC DESCRIPTION

IC, LC6538D-4098

Pin No.	Pin Name	I/O	Description
1	S10	O	FL display segment outputs.
2	S11	O	
3	——	—	Unused.
4	O-MRES	O	Level meter T/V conversion reset pulse. 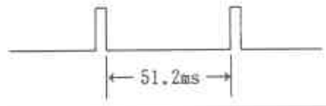
5 ~ 14	T9 ~ T0	O	FL display grid outputs and key scan outputs.
15	VDD	—	Power supply pin (+6V).
16	OSC1	—	A ceramic oscillator is connected (4MHz).
17	OSC2		
18	Vss	—	Power supply remote control terminal (GND).
19	TEST	I	Connected to ground.
20	$\overline{\text{RES}}$	I	Reset input. "L" input resets the IC.
21	X1	—	Connected to ground.
22	X2	—	Unused.
23	I-$\overline{\text{HALT-REQ}}$	I	Hold request input. When the power switch is turned off, this pin goes "L" and the IC enters the low current consumption mode and the direction of tape running is stored.
24	I/O-SYNC	I/O	Unused.
25	O-LMT	O	LINE MUTE output. "H" output mutes a signal.
26	O-PLAY	O	CUE/REVIEW MUTE output and MS gain control terminal. Goes "H" during PLAY and "L" during CUE, REVIEW and MS.
27	O-PB/1	O	DECK 1 playback sound control pin. Goes "H" when DECK 1 is playing. When DECKs 1 and 2 are playing, only pin ㉘ goes "H".
28	O-PB/2	O	DECK 2 playback sound control pin. Goes "H" when DECK 2 is playing.
29	O-$\overline{\text{MTR}}$	O	Motor on/off control pin. "L" output turns the motor.
30	O-HSP	O	Motor speed control pin. Outputs "H" during double speed.
31 ~ 34	DT0 ~ DT3	I	Key scan inputs.
35	I-LEVEL/L	I	Lch level meter signal input.
36	I-LEVEL/R	I	Rch level meter signal input.
37	I-MS	I	MS signal input.
38	I-REMOTE	I	Remote control input.
39	I-QUICK/1	I	DECK 1 quick reverse signal input. "H" input reverse the tape.
40	I-QUICK/2	I	DECK 2 quick reverse signal input.
41	O-$\overline{\text{REC}}$	O	Dolby NR IC recording/playback mode switching pin. Goes "L" during recording and "L" during play and dubbing.
42	O-$\overline{\text{RMT-2}}$	O	DECK 2 REC MUTE control pin. "L" output turns REC MUTE on.
43	O-$\overline{\text{RMT-1}}$	O	DECK 1 REC MUTE control pin. "L" output turns REC MUTE on.
44	O-$\overline{\text{BIAS-2}}$	O	DECK 2 BIAS OSC control pin. "L" output causes oscillations.
45	O-$\overline{\text{BIAS-1}}$	O	DECK 1 BIAS OSC control pin. "L" output causes oscillations.
46	O-$\overline{\text{DOLBY}}$	O	Dolby NR on/off control pin. "L" output turns Dolby NR on.
47	O-DOLBY-B	O	Dolby B/C NR control pin. "H" output activates Dolby B NR.

Pin No.	Pin Name	I/O	Description	
48	I-AUTO/2	I	DECK 2 tape end detection signal input.	When there is no change in the input for a predetermined time, the tape is reversed and then stops. (It is set to 4 sec during play and recording and 0.5 sec during fast forward and rewind.
49	I-AUTO/1	I	DECK 1 tape end detection signal input.	
50	O-$\overline{\text{SOL-PB/1}}$	O	DECK 1 play solenoid control pin.	
51	O-$\overline{\text{SOL-FRP/1}}$	O	DECK 1 pause solenoid control pin.	
52	O-$\overline{\text{SOL-FRP/2}}$	O	DECK 2 pause solenoid control pin.	
53	O-$\overline{\text{SOL-PB/2}}$	O	DECK 2 play solenoid control pin.	
54 ~ 61 63 64	S0 ~ S7 S8 S9	O	FL display segment ouputs.	
62	VP	—	Power supply pin to light the FL display (-38V).	

PRACTICAL SERVICE FIGURE

Playback output : 0.45V±1.5dB (LINE OUT)
TTA-200(TTA-161,TCC-130)
PB/REC output : 0VU±1.5dB (LINE OUT)
TTA-600(TTA-119K) 0VU±1.7dB
(At Dubbing, Master tape TTA-200)
PB/REC distortion : Less than 2.5% (MT,CrO_2,NORM.)
Playback noise : Less than 2.0/1.2mV
(Unweighted) (CrO_2,DOLBY NR C OFF/ON)
Less than 2.5mV
(NORM.,DOLBY NR OFF)
(DIN AUDIO) Less than 1.5/1.0mV
(CrO_2,DOLBY NR C OFF/ON)
Less than 1.8mV
(NORM.,DOLBY NR OFF)
Erase ratio (125kHz) : More than 60dB
Cross talk (PB) : More than 60dB
Channel separation (PB): More than 25dB
Level drift : Within 1dB
PB/REC S/N ratio : More than 43/48dB
(UNweighted) (MT,CrO_2,DOLBY NR C OFF/ON)
More than 41/46dB
(NORM.,DOLBY NR C OFF/ON)
(Weighted-A) More than 47/65dB
(MT,CrO_2,DOLBY NR C OFF/ON)
More than 45/65dB
(NORM.,DOLBY NR C OFF/ON)
Dolby NR effect : More than 8.5dB (B type)
(TTA-610,CCIR Filter) More than 17dB (C type)
Recording bias frequency:105kHz
Tape speed : 3kHz±1.5% (D1,2)

TTA-100(TTA-111S)
Wow & flutter : Less than 0.065% (D1,2)
(W.R.M.S)
Take-up torque : 45±15g-cm (D1,2)
[0.44±0.15mN·m]
F.FWD torque : 120±40g-cm (D1,2)
[1.18±0.39mN·m]
Rewind torque : 120±40g-cm (D1,2)
[1.18±0.39mN·m]
Back-tension : 3±2g-cm (D1,2)
[0.03±0.02mN·m]
Test tapes : METAL TTA-620 (TTA-119MP)
CrO_2 TTA-610 (TTA-119H)
NORMAL TTA-600 (TTA-119K)

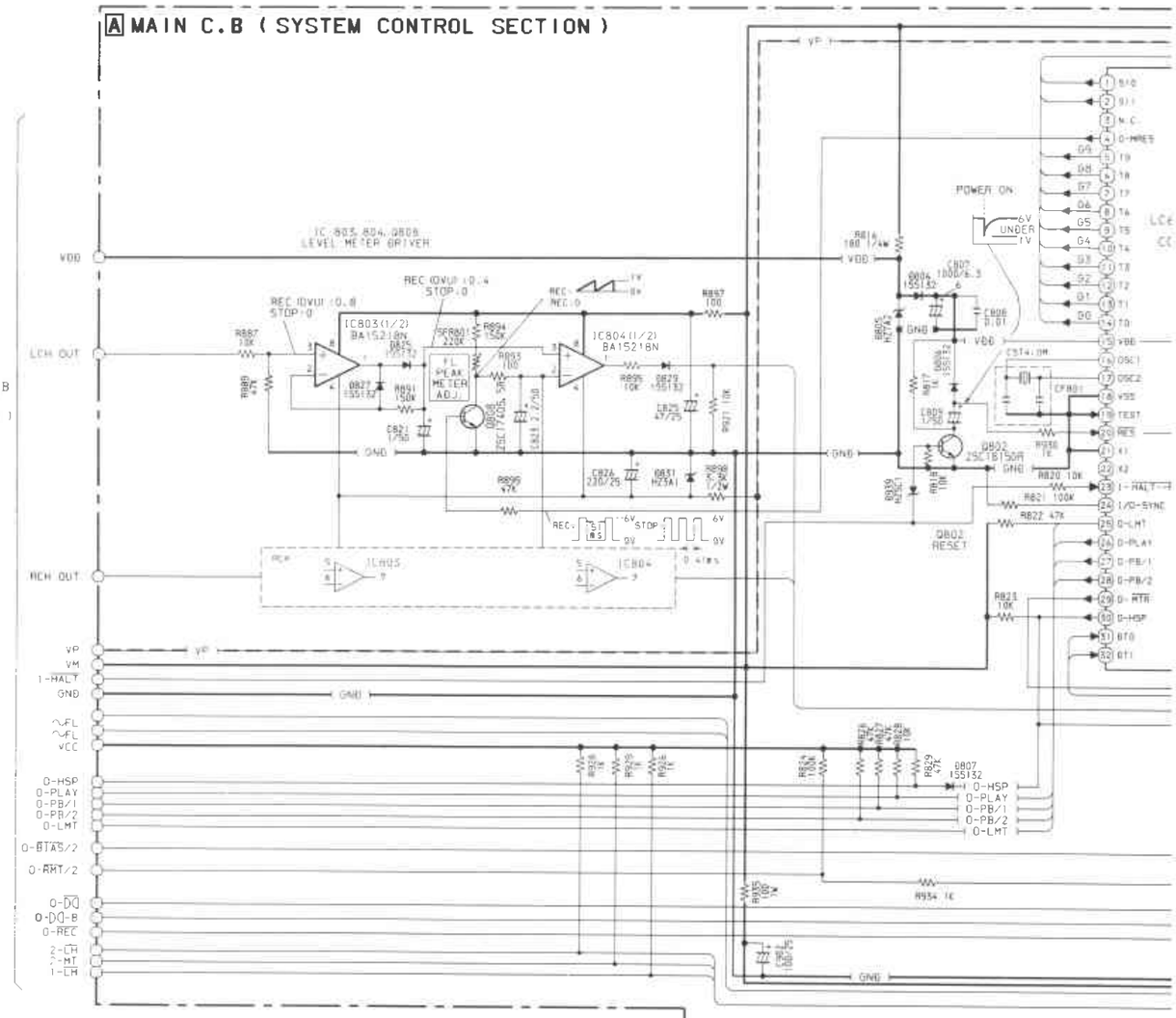
A MAIN C.B (SYSTEM CONTROL SECTION)
TO A MAIN C.B (AMP SECTION)
VDD
LCH OUT
RCH OUT
VP
VM
I-HALT
GND
~FL
~FL
VCC
O-HSP
O-PLAY
O-PB/1
O-PB/2
O-LMT
O-BIAS/2
O-RMT/2
O-DQ
O-DQ-B
O-REC
2-CH
2-MT
1-CH
IC803,804,Q808
LEVEL METER DRIVER
IC803(1/2)
BA15218N
IC804(1/2)
BA15218N
FL PEAK METER ADJ.
POWER ON
6V UNDER 1V
Q802 2SC1815GR
Q802 RESET
IC805
IC804
O-HSP
O-PLAY
O-PB/1
O-PB/2
O-LMT
I-HALT
I/O-SYNC
O-LMT
O-PLAY
O-PB/1
O-PB/2
O-RTR
O-HSP
DT0
DT1

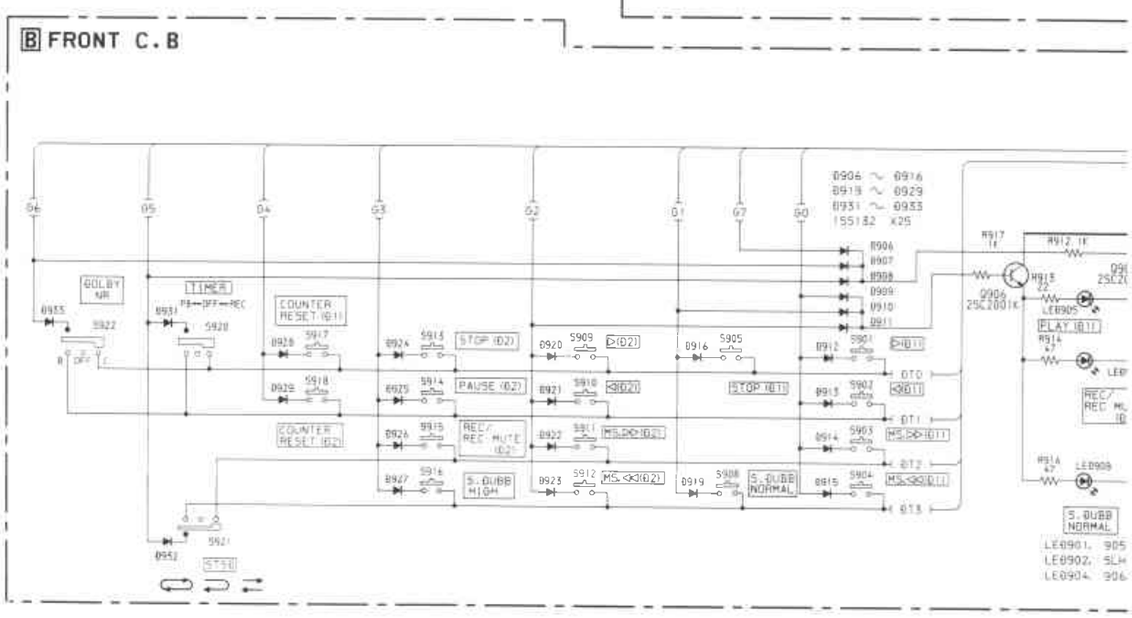
B FRONT C.B
D6
D5
D4
D3
D2
D1
D7
D0
D906 ~ D916
D918 ~ D929
D931 ~ D933
1SS132 X25
DOLBY NR
TIMER
PB→OFF→REC
COUNTER RESET (D1)
COUNTER RESET (D2)
STOP (D2)
PAUSE (D2)
REC/ REC MUTE (D2)
S.DUBB HIGH
S.DUBB NORMAL
STOP (D1)
PLAY (D1)
REC/ REC MUTE (D1)
S.DUBB NORMAL
LED901, 905
LED902, SLH
LED904, 906

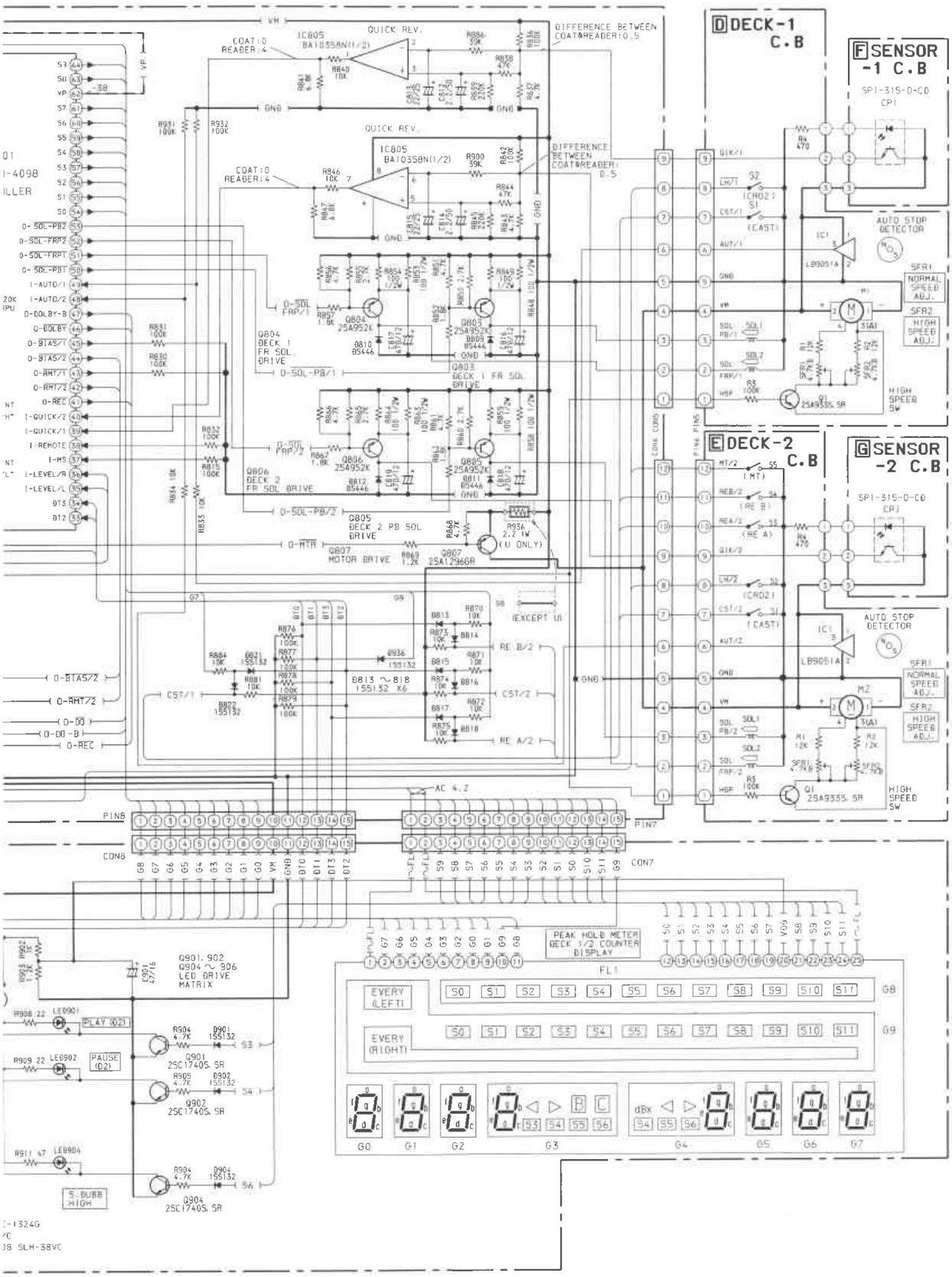
D DECK-1 C.B
F SENSOR -1 C.B
E DECK-2 C.B
G SENSOR -2 C.B
SP1-31S-0-C0
CP1
AUTO STOP DETECTOR
NORMAL SPEED ADJ.
HIGH SPEED ADJ.
HIGH SPEED SW
IC805 BA10358N(1/2)
QUICK REV.
COAT:0 READER:4
DIFFERENCE BETWEEN COAT&READER:0.5
Q804 DECK 1 FR SOL DRIVE
Q803 DECK 1 FR SOL DRIVE
Q806 DECK 2 FR SOL DRIVE
Q805 DECK 2 PB SOL DRIVE
Q807 MOTOR DRIVE
Q807 2SA1266GR
R936 2.2 1W (U ONLY)
(EXCEPT U)
RE B/2
RE A/2
CST/1
CST/2
PIN8
PIN7
CON8
CON7
AC 4.2
Q901, 902 Q904 ~ 906 LED DRIVE MATRIX
PLAY (D2)
PAUSE (D2)
5-DUBB HIGH
PEAK HOLD METER DECK 1/2 COUNTER DISPLAY
EVERY (LEFT)
EVERY (RIGHT)
FL1

ADJUSTMENT

Initial Settings

- TIMER : OFF
- STSD MODE : ⇄
- DOLBY NR : OFF
- BIAS FINE (DECK 2) : Center
- BALANCE : Center
- REC LEVEL : Center
- OVU LEVEL : 1kHz, 320mV

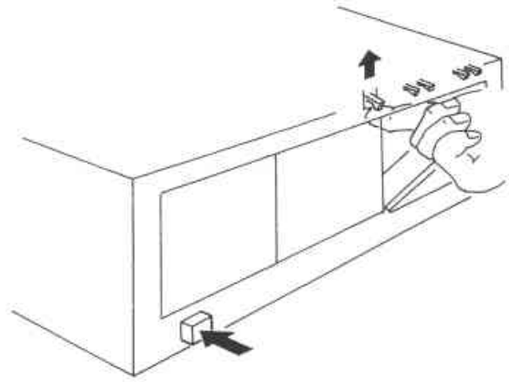

Tape Speed Adjustment

Set the unit to the test mode by the following procedure before performing speed adjustment. Be sure to perform normal speed adjustment first. If high speed adjustment is done first, adjustment will drift.

To set the test mode :

1. Turn the power switch off.
2. Open the cassette lid of DECK 2.
3. Turn the power switch on while pressing the miserasure prevention lever (FWD side) of DECK 2 as shown in the figure.
4. After several seconds, the FL display light showing that the unit has entered the test mode.

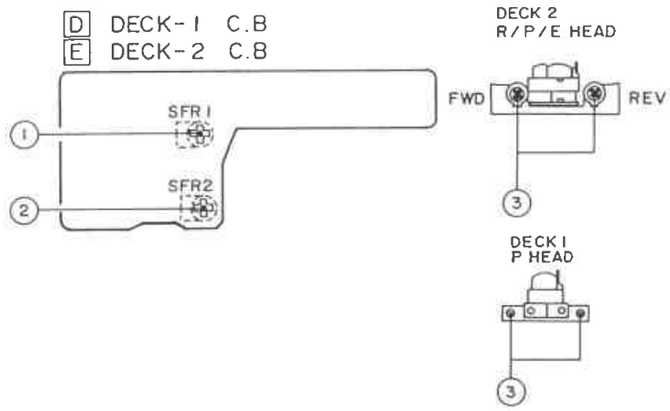

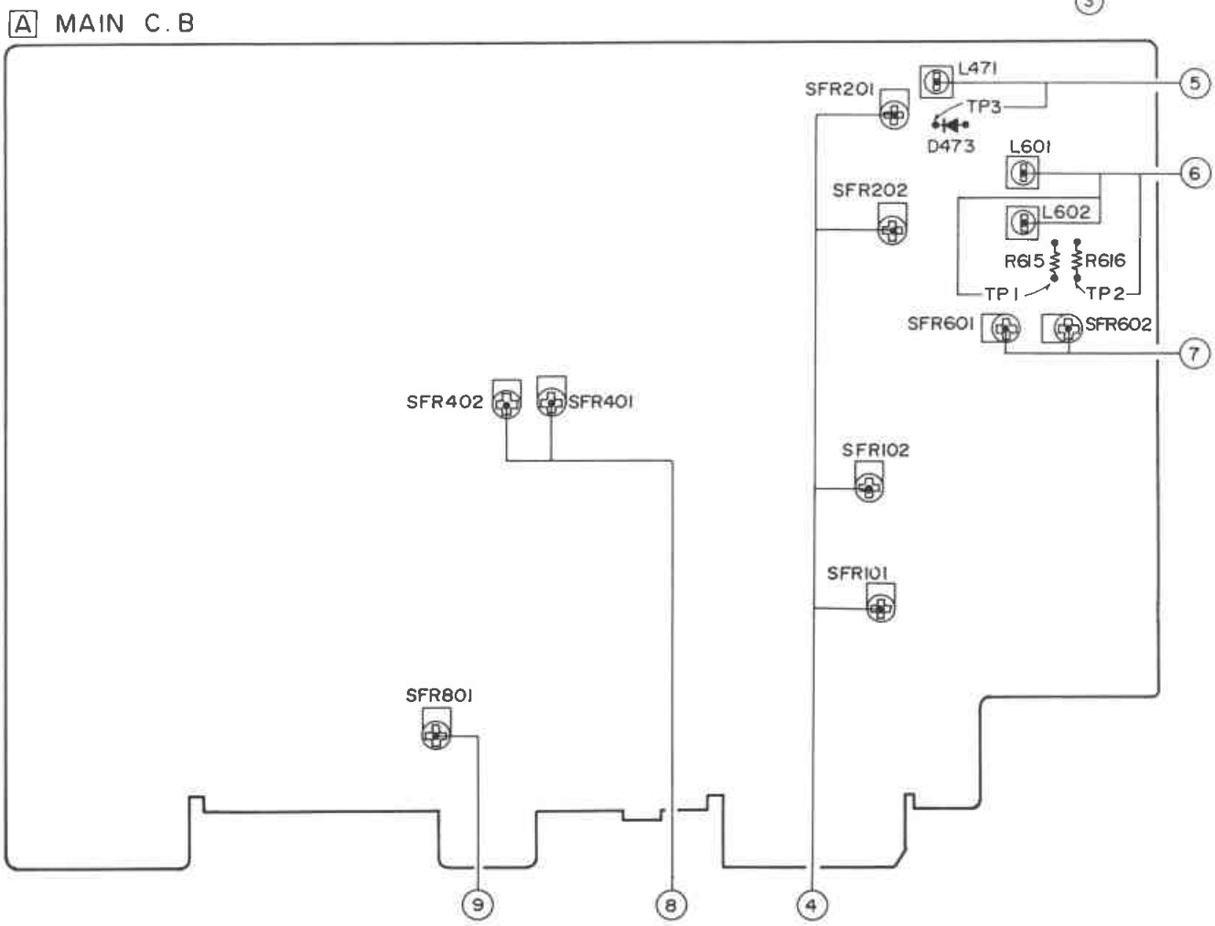

1. Normal Speed Adjustment (DECK 1, DECK 2)
   Settings : • Test tape: TTA-100 (TTA-111S)
   • Test point: LINE OUT jack
   • Adjustment location: SFR1 on [D] DECK-1 C.B
   SFR1 on [E] DECK-2 C.B
   Method : Play the test tape and adjust so that the frequency is 3000Hz.

2. High Speed Adjustment (DECK 1, DECK 2)
   Settings : • Test tape: TTA-100 (TTA-111S)
   • Test point: LINE OUT jack
   • Adjustment location: SFR2 on [D] DECK-1 C.B
   SFR2 on [E] DECK-2 C.B
   Method :
   1. Set the unit to the test mode.
   2. Load test tape TTA-100 (TTA-111S).
   3. Press the PLAY button and then the HIGH button to set the unit to the high speed mode.
   4. Adjust SFR2 so that the frequency is 6000Hz.
   5. After adjustment is completed, press the HIGH button to set the unit to the normal speed mode.
   6. Press the STOP button.
   7. Turn the power switch off to release the test mode.
   Notes: (1) Keys other than the HIGH button will not operate in the high speed mode.
   (2) Do not turn the power switch off in the high speed mode.

3. Azimuth Adjustment (DECK 1, DECK 2)
   Settings : • Test tape: TTS-310 (TTA-317E)
   • Test point: LINE OUT jack
   • Adjustment location: Azimuth adjustment screws (DECK-1, DECK-2, FWD, REV)
   Method : Play the 10kHz signal of test tape and adjust so that the output is maximum and the waveforms in the Lissajours are in phase. Then tighten the screw slightly so that the output is within -0.5dB for the maximum value and the waveforms are within 90°.

4. Playback Level Adjustment (DECK 1, DECK 2)
   Settings : • Test tape: TTA-200 (TTA-161, TCC-130)
   • Test point: LINE OUT jack
   • Adjustment location: SFR101 (DECK 1, Lch)
   SFR102 (DECK 1, Rch)
   SFR201 (DECK 2, Lch)
   SFR202 (DECK 2, Rch)
   Method : Play the test tape and adjust so that the output level is 450mV±0.5dB.

5. Bias Frequency Adjustment (DECK 2)
   Settings : • Test tape: TTA-620 (TTA-119MP)
   • Test point: TP3 (D473 cathode)
   • Adjustment location: L471
   Method : Set to the record mode and adjust so that the frequency is 105kHz±0.3kHz.

6. HX Offset Adjustment (DECK 2)
   Settings : • Test tape: TTA-620 (TTA-119MP)
   • Test point: TP1 (R615, Lch)
   TP2 (R616, Rch)
   • Adjustment location: L601 (Lch)
   L602 (Rch)
   Method : Set to the record mode and adjust so that the bias voltage leaking to the test point is minimum.

7. REC/PB Frequency Response Adjustment (DECK 2)
   Settings : • Test tape: TTA-600 (TTA-119K)
   • Input signal: 1kHz/10kHz (LINE IN jack)
   • Test point: LINE OUT jack
   • Adjustment location: SFR601 (Lch)
   SFR602 (Rch)
   Method : Apply a 1kHz signal and adjust an attenuator so that the output level is 32mV at LINE OUT jack. Record and play back the 1kHz and 10kHz signals and adjust so that the output level of 10kHz signal is +0.5dB±0.5dB for 1kHz signal.

8. REC/PB Sensitivity Adjustment (DECK 2)
   Settings : • Test tape: TTA-600 (TTA-119K)
   • Input signal: 1kHz (LINE IN jack)
   • Test point: LINE OUT jack
   • Adjustment location: SFR401 (DECK 2, Lch)
   SFR402 (DECK 2, Rch)
   Method : Apply a 1kHz signal and adjust an attenuator so that the output level is 32mV at LINE OUT jack. Record and play back the 1kHz signal and adjust so that the output is 32mV±0.5dB.

9. FL Peak Meter Adjustment (DECK 1)
   Settings : • Test tape: TTA-600 (TTA-119K)
   • Input signal: 1kHz (LINE IN jack)
   • Test point: LINE OUT jack
   • Adjustment location: SFR801
   Method : Apply a 1kHz signal of 320mV and record it to a test tape and adjust SFR801 so that FL peak meter indicates 0VU. Play back the test tape and confirm that FL peak meter indicates +3dB (9 Blue LED light on).

SCHEMATIC DIAGRAM—3

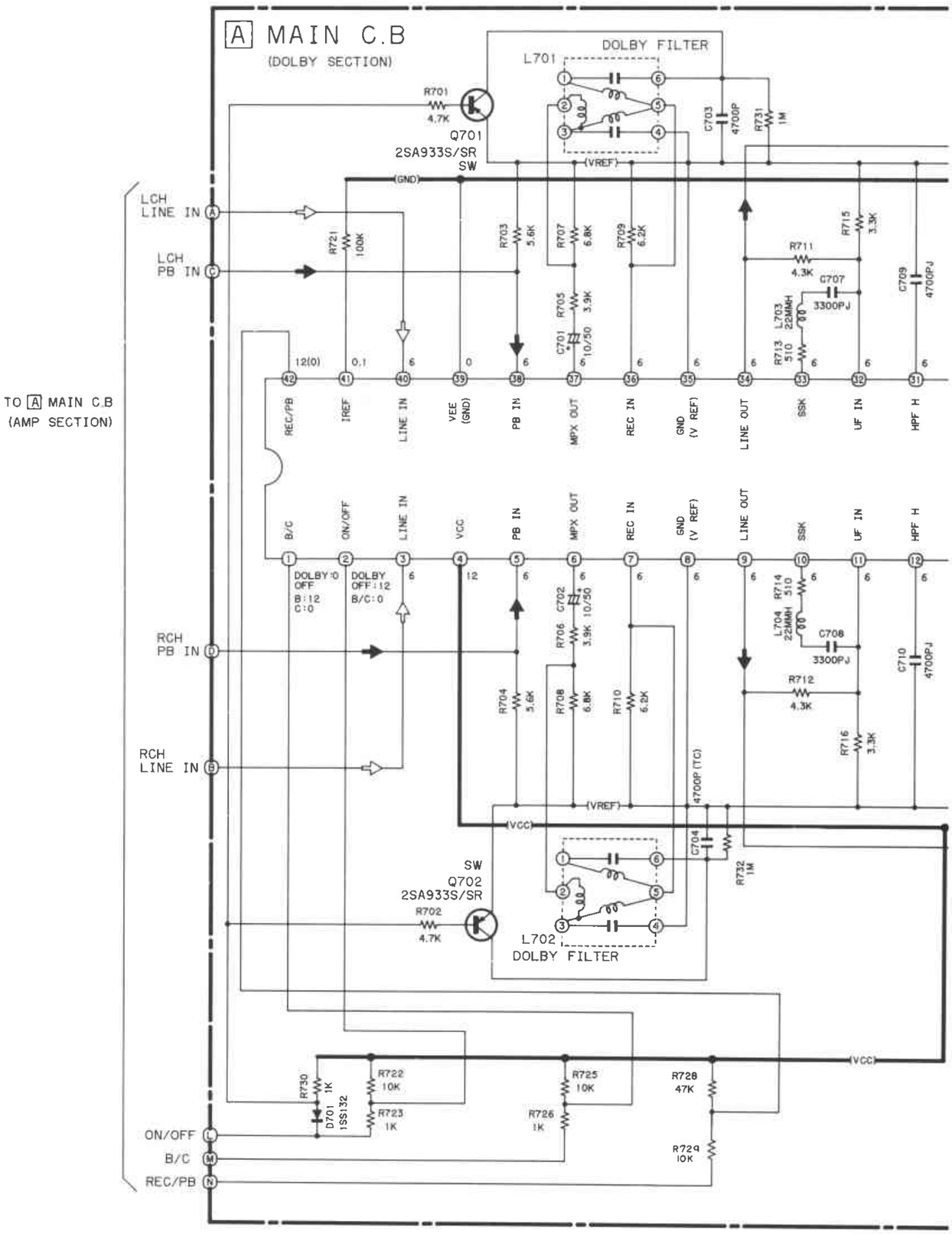

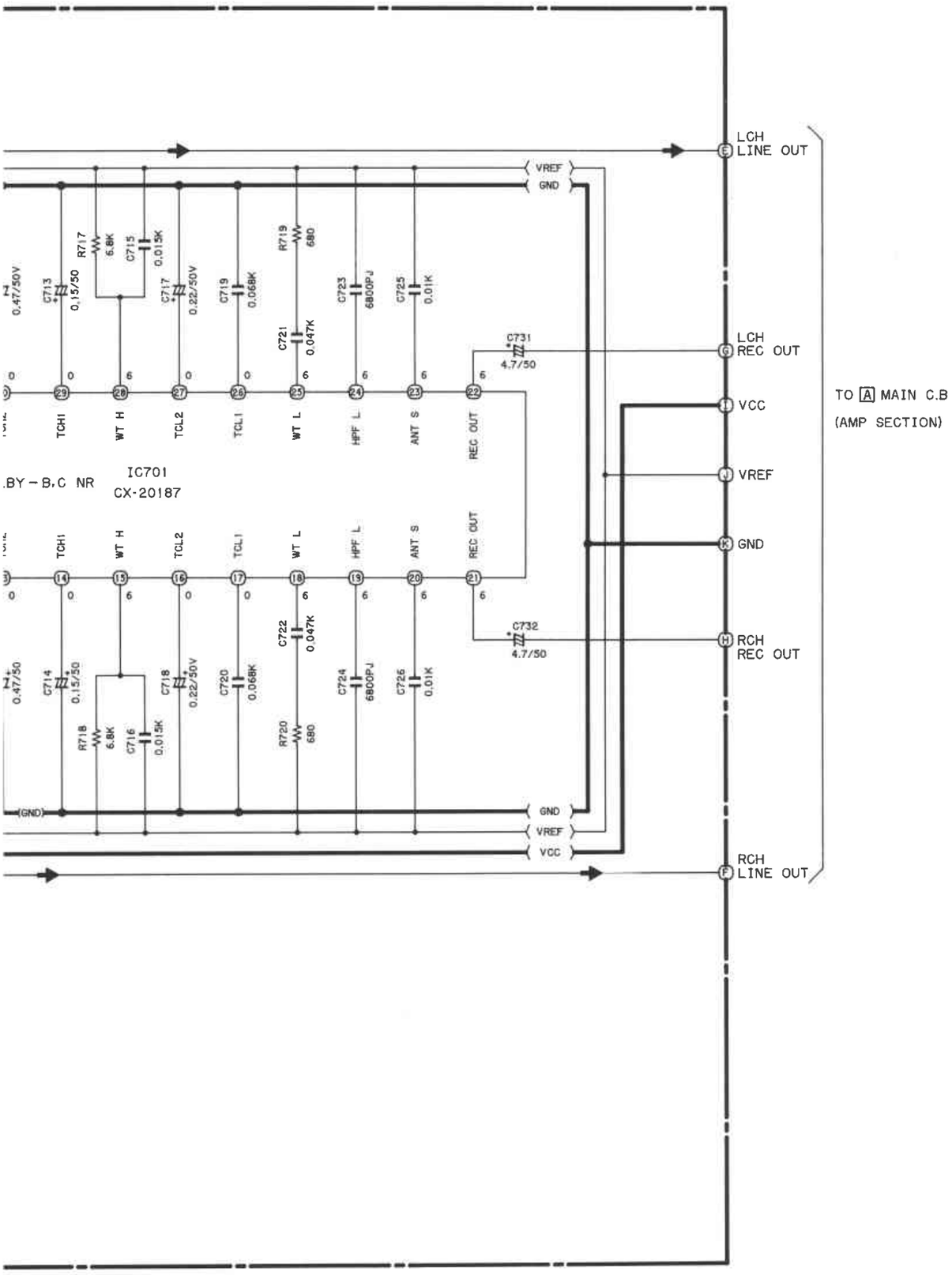
LCH
LINE OUT
VREF
GND
LCH
REC OUT
VCC
VREF
GND
RCH
REC OUT
RCH
LINE OUT
TO A MAIN C.B
(AMP SECTION)
IC701
CX-20187
.BY-B.C NR
TCH1
WT H
TCL2
TCL1
WT L
HPF L
ANT S
REC OUT
C713
0.15/50
R717
6.8K
C715
0.015K
C717
0.22/50V
C719
0.068K
R719
680
C721
0.047K
C723
6800PJ
C725
0.01K
C731
4.7/50
C714
0.15/50
R718
6.8K
C716
0.015K
C718
0.22/50V
C720
0.068K
R720
680
C722
0.047K
C724
6800PJ
C726
0.01K
C732
4.7/50
(GND)

EXPLODED VIEW－2

REF. NO.	PART NO.	DESCRIPTION
A	87-067-470-01	PW4.1－6.9－0.13
B	86-524-418-01	VFT2＋1.4－5
C	87-067-177-01	V＋1.6－5.5
D	87-081-489-01	PW1.7－3.5－0.25
E	87-067-174-01	VTT＋2－4

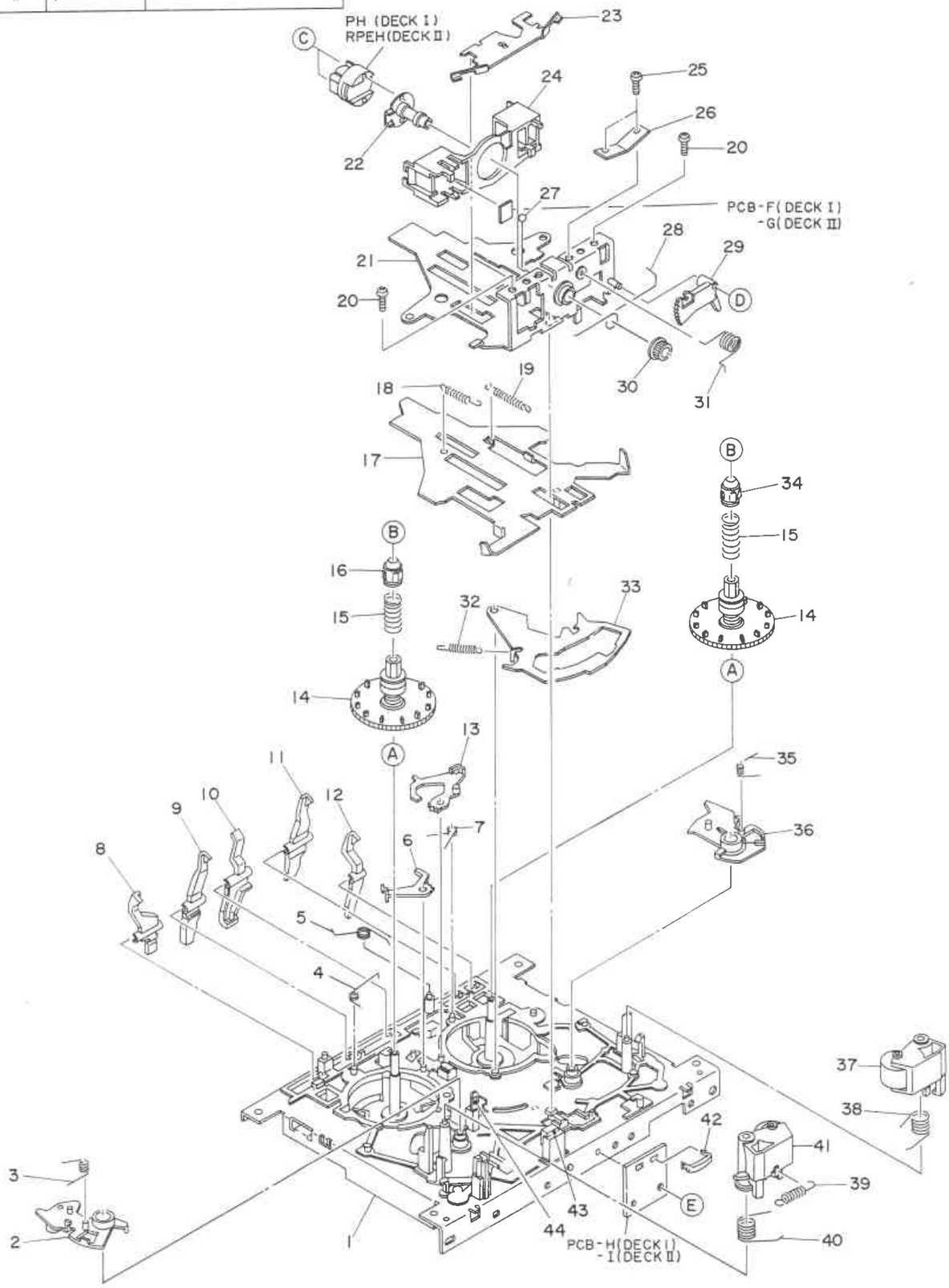

PART NO. CHANGED TO	REF. NO.	PART NO.	DESCRIPTION	COMMON MODEL	Q'TY
	2-1	★86-575-217-110	MECHANIZUM CHASSIS ASSY		1
	2-2	★86-535-239-110	LEVER, PLAY R		1
	2-3	★86-535-283-019	T-SPRING, PLAY GEAR R		1
	2-4	★86-535-371-019	T-SPRING, BRAKE R		1
	2-5	★86-575-225-010	T-SPRING, CASSETTE		1
	2-6	★86-535-252-210	LEVER, BRAKE R		1
	2-7	★86-535-370-019	T-SPRING, BRAKE F		1
	2-8	★86-535-247-210	LEVER, REC GUARD A(DECK Ⅱ)		1
	2-9	★86-535-250-010	LEVER, METAL(DECK Ⅱ)		1
	2-10	★86-535-249-210	LEVER, CASSETTE SENSOR		1
	2-11	★86-535-254-110	LEVER, CR		1
	2-12	★86-535-248-310	LEVER, REC GUARD B(DECK Ⅱ)		1
	2-13	★86-535-251-010	LEVER, BRAKE F		1
	2-14	★86-535-240-210	REEL TABLE R ASSY		2
	2-15	★86-535-293-019	C-SPRING, REEL TABLE		2
	2-16	★86-524-218-119	STOPPER, REEL TABLE S		1
	2-17	★86-535-215-310	SLIDE PLATE ASSY		1
	2-18	★86-575-227-010	E-SPRING, LEVER SLIDE		1
	2-19	★86-575-226-010	E-SPRING, CHASSIS HEAD		1
	2-20	★86-575-236-010	S-SCREW, TAPE ADJUSTMENT		2
	2-21	★86-575-209-010	HEAD CHASSIS ASSY		1
	2-22	★86-575-207-010	HEAD HOUSING ASSY		1
	2-23	★86-535-289-010	P-SPRING, HEAD CHASSIS		1
	2-24	★86-575-214-110	GUIDE, TAPE		1
	2-25	★86-575-235-010	S-SCREW, AZIMUTH		2
	2-26	★86-524-300-019	P-SPRING, AZIMUTH		1
	2-27	★87-073-018-019	STEEL BALL1.588		1
	2-28	★86-575-240-010	T-SPRING, GUIDE		1
	2-29	★86-535-246-210	GEAR, SEGMENT		1
	2-30	★86-575-206-010	GEAR, HEAD FR		1
	2-31	★86-535-290-010	T-SPRING, GEAR SEGMENT		1
	2-32	★86-535-284-010	E-SPRING, LEVER DIRECTION		1
	2-33	★86-535-218-210	LEVER DIRECTION ASSY		1
	2-34	★86-524-233-119	STOPPER, REEL TABLE T		1
	2-35	★86-535-282-019	T-SPRING, PLAY GEAR F		1
	2-36	★86-535-238-210	LEVER, PLAY F		1
	2-37	★86-535-226-110	PINCH LEVER F ASSY		1
	2-38	★86-575-222-010	T-SPRING, PINCH F		1
	2-39	★86-535-287-110	E-SPRING, PINCH		1
	2-40	★86-575-223-010	T-SPRING, PINCH R		1
	2-41	86-535-228-110	PINCH LEVER R ASSY		1
	2-42	★86-575-234-010	HOLDER, WIRE		1
	2-43	★86-535-353-010	FELT SQ 5-4-2		1
	2-44	★86-517-353-019	SEET, QUICK		1

EXPLODED VIEW－1

REF.NO.	PART NO.	DESCRIPTION
A	87-067-578-01	BVT_1+3-8
B	87-591-094-41	QIT+3-6
C	81-653-215-01	SPECIAL SCREW VT2
D	87-583-094-01	VIT+3-6(B)
E	87-067-586-01	BVTT+4-8
F	87-067-660-01	BVT_2+3-8(B)
G	87-571-094-41	VIT+3-6
H	87-067-583-01	BVT_2+3-6(R)
I	87-067-633-01	BVT_2+3-8
J	87-561-097-21	VFT_1+3-12

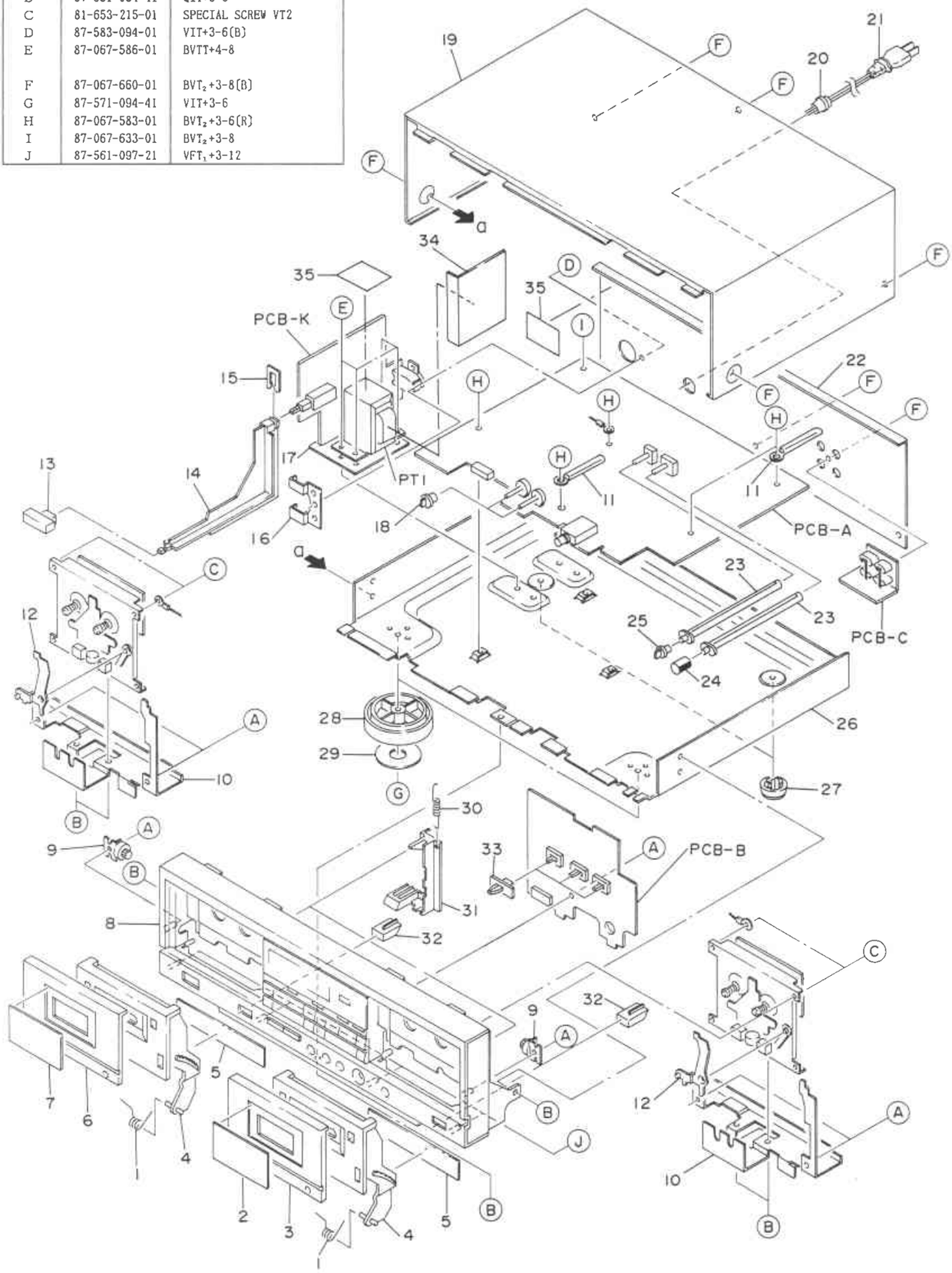

MECHANICAL PARTS LIST

PART NO. CHANGED TO	REF. NO.	PART NO.	DESCRIPTION	COMMON MODEL	Q, TY
	1-1	*84-790-208-019	SPRING,EJECT		2
	1-2	*84-790-027-019	WINDOW,CASSETTE BOX 2		1
	1-3	*84-790-031-119	PANEL,AMTS		1
	1-4	*09-047-508-010	CASSETTE BOX ASSY(H,C,E,K,Z)	*	2
	1-4	*09-047-509-010	CASSETTE BOX ASSY(U)	*	2
	1-5	---	SHEET FOAMED MAT 250-25		2
	1-6	*84-790-030-019	PANEL,CASSETTE BOX 1		1
	1-7	*84-791-016-019	WINDOW,CASSETTE BOX 1M	*	1
	1-8	*09-047-519-010	CABINET FRONT ASSY(H,C,E,K,Z)	*	1
	1-8	*09-047-520-010	CABINET FRONT ASSY(U)	*	1
	1-9	*87-063-143-010	OIL-DMPR 75		2
	1-10	*84-790-207-019	HOLDER,MECHA		2
	1-11	---	WIRE BINDER		2
	1-12	*86-535-393-019	LEVER,EJECT STOPPER		2
	1-13	*84-721-023-010	BUTTON,POWER		1
	1-14	*84-790-209-019	ROD,POWER		1
	1-15	*82-385-383-010	STOPPER,ROD		1
	1-16	*83-317-212-019	HOLDER,VS(H)		1
	1-17	*84-790-218-010	PLATE,SHIELD		2
	1-18	*84-424-008-019	KNOB,VOLUME		2
	1-19	*84-790-042-019	CABINET,STEEL 2		1
	1-20	*87-085-184-010	BUSHING AC CORD(H)		1
	1-20	*87-085-189-010	BUSHING AC CORD(U,C)		1
	1-20	*87-085-185-010	BUSHING AC CORD(E,K,Z)		1
	1-21	*87-034-749-019	AC CORD(H)		1
	1-21	*87-034-584-019	AC CORD(U,C)		1
	1-21	*82-187-797-019	AC CORD(E,Z)		1
	1-21	*82-187-796-019	AC CORD(K)		1
	1-22	*84-791-004-019	PANEL,REAR(H)	*	1
	1-22	*84-791-010-019	PANEL,REAR(HJ)	*	1
	1-22	*84-791-005-019	PANEL,REAR(U)	*	1
	1-22	*84-791-006-019	PANEL,REAR(C)	*	1
	1-22	*84-791-007-019	PANEL,REAR(E)	*	1
	1-22	*84-791-008-019	PANEL,REAR(K)	*	1
	1-22	*84-791-009-019	PANEL,REAR(Z)	*	1
	1-23	*84-790-216-019	SHAFT,VOLUME		2
	1-24	*84-790-015-019	KNOB,VOLUME		1
	1-25	*84-790-040-010	KNOB,BALANCE		1
	1-26	---	CHASSIS,9D		1
	1-27	*81-675-010-010	FOOT,H10		2
	1-28	*84-738-022-010	FOOT		2
	1-29	*84-731-027-010	FELT,FOOT		2
	1-30	*84-790-212-019	E-SPRING,ROD		2
	1-31	*84-790-206-019	ROD,EJECT		2
	1-32	*84-790-014-019	BUTTON,EJECT		2
	1-33	*84-790-039-019	KNOB,SLIDE N		3
	1-34	*84-117-637-010	PLATE,SHIELD PT		1
	1-35	*82-231-213-010	SHEET,45X30		1

EXPLODED VIEW－3

REF. NO.	PART NO.	DESCRIPTION
A	87-081-501-01	VTT+2.6－4
B	86-575-243-01	MOTOR SCREW
C	87-067-332-01	PW2.8－4.7－0.13
D	87-081-489-01	PW1.7－3.5－0.25
E	87-067-380-01	PW1.7－7－0.5

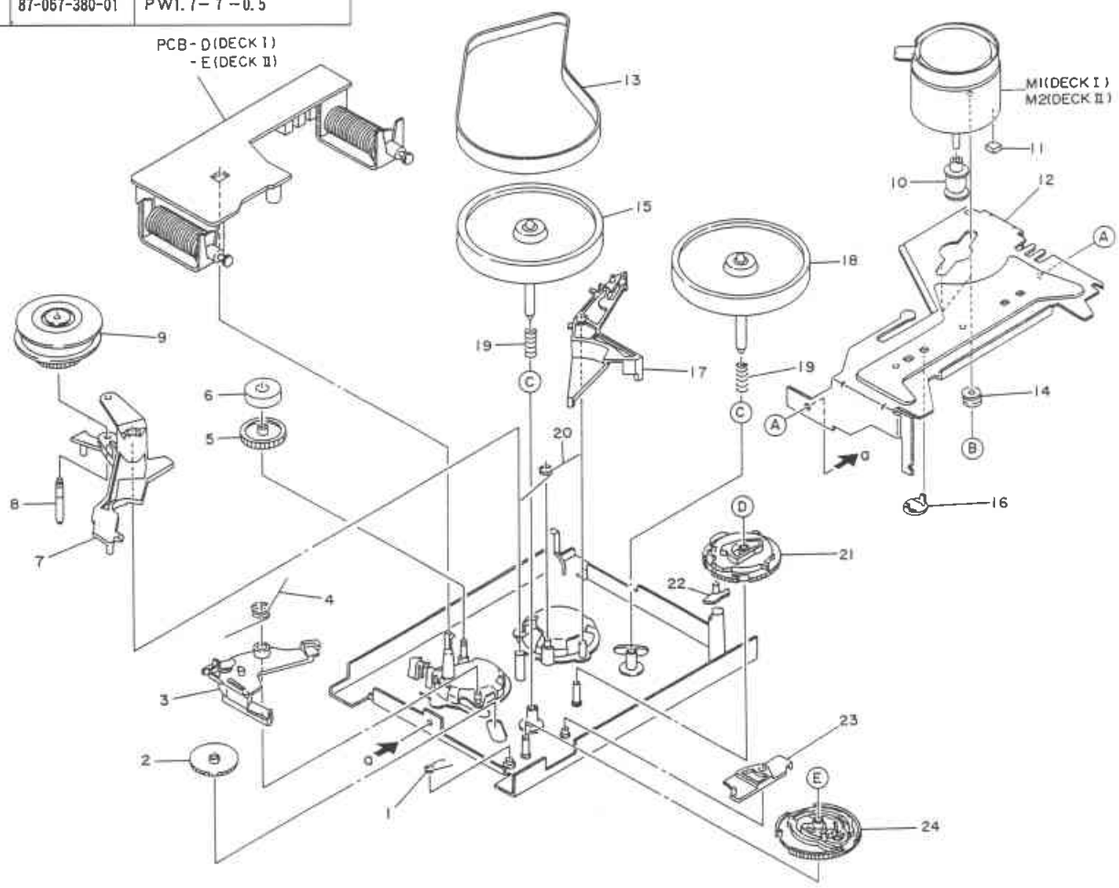

PART NO. CHANGED TO	REF. NO.	PART NO.	DESCRIPTION	COMMON MODEL	Q'TY
	3-1	★86-535-291-210	T－SPRING, FR CAM		1
	3-2	★86-535-259-310	GEAR, PLAY		1
	3-3	86-535-230-310	LEVER, TRIGGER FR		1
	3-4	★86-535-278-019	T－SPRING, FR		1
	3-5	★86-575-220-010	GEAR, IDLER		1
	3-6	★86-535-614-010	RING, MAGNET		1
	3-7	86-535-233-110	LEVER FR		1
	3-8	86-575-213-010	SHAFT, FR		1
	3-9	★86-535-301-110	SLIP DISK ASSY		1
	3-10	★86-575-237-010	PULLY, MOTOR B		1
	3-11	★86-575-261-019	G CUSHION 5－5－1.35		1
	3-12	★86-575-218-010	HOLDER, MOTOR		1
	3-13	★86-575-210-110	BELT 1		1
	3-14	★86-575-242-010	G CUSHION DIAL3.9－3.2		2
	3-15	86-575-203-010	FLYWHEEL F ASSY		1
	3-16	★86-535-255-010	RETAINER, FLYWHEEL		1
	3-17	86-535-231-210	LEVER, TRIGGER PLAY		1
	3-18	86-575-201-010	FLYWHEEL R ASSY		1
	3-19	★86-535-288-019	C－SPRING, FLYWHEEL		2
	3-20	★86-535-279-010	T－SPRING, MAIN		1
	3-21	★86-535-260-310	CAM, MAIN		1
	3-22	★86-535-308-110	LEVER, CHANGE		1
	3-23	★86-575-229-010	LEVER, PAUSE B		1
	3-24	★86-535-261-310	CAM, FRP		1

SPRING APPLICATION POSITION

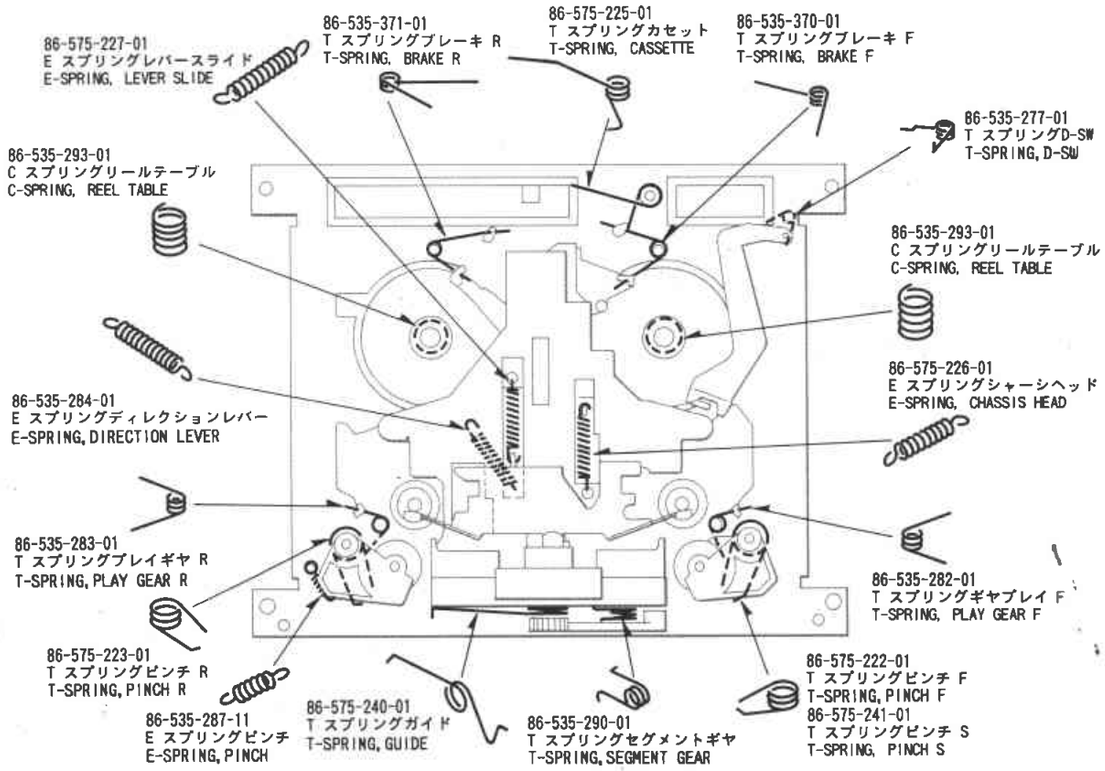

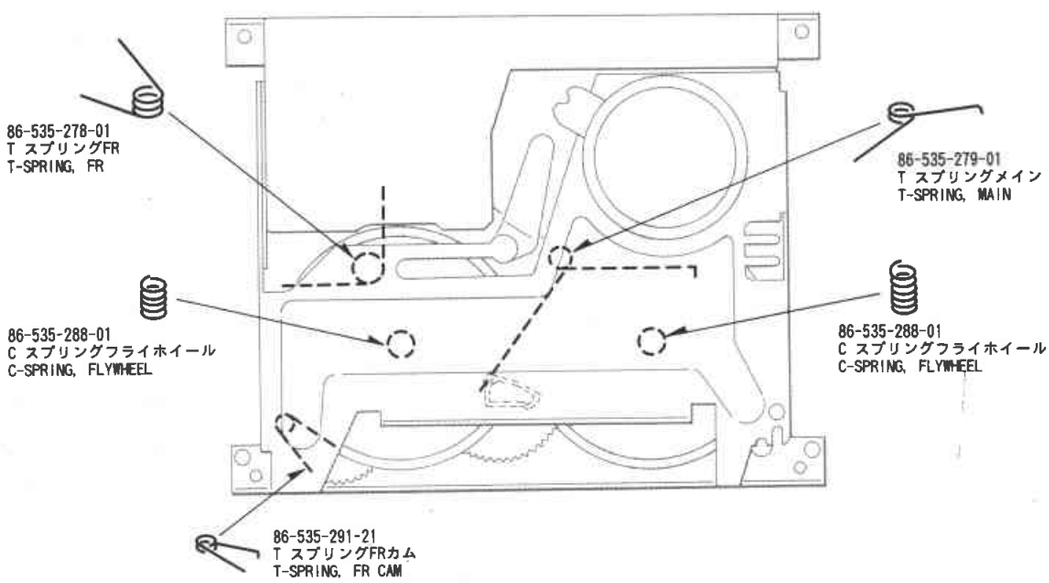

■ACCESSORIES／PACKAGE LIST

PART NO. CHANGED TO	REF. NO.	PART NO.	DESCRIPTION	COMMON MODEL	Q, TY
	1	*84-791-904-019	INSTRUCTION BOOKLET EX	*	1
	2	*87-032-845-019	PLUG SIEMENS(H)		1
	3	*87-034-773-010	CORD PIN,R-237W-1M		2