FULL AUTOMATIC DIRECT DRIVE TURNTABLE SYSTEM

MODEL NO. AP-D50E, K, G

AIWA®

(SERVICE MANUAL)

Code No. 07-500-000-36

DATE OF ISSUE 6/1980

SPECIFICATIONS

Type:	Full automatic direct drive turntable system
Semiconductors:	2 IC's, 1 FET, 50 transistors, 36 diodes, 3 LED's
Power source:	E model AC 220V, 50/60 Hz K,G model AC 240V, 50/60 Hz
Power consumption:	10 W
Dimensions:	450(W) x 106.5(H) x 375(D) mm
Weight:	7 kg
< Turntable section >	
Drive system:	Frequency generated direct drive system
Motor:	4 phase 8-pole linear torque DD hall motor x 1 DC motor x 2
Turntable platter:	Aluminum alloy diecast Diameter 300 mm Weight 1.3 kg
Moment of inertia:	220 kg/cm²
Speeds:	33-1/3, 45 rpm
Wow & flutter:	0.028% (WRMS)
Signal to noise ratio: (Weighted)	More than 57 dB (IEC B) More than 75 dB (DIN B)

< Tone arm section >	
Type:	Static-balanced type
Effective arm length:	215 mm
Overhang:	15 mm
Usable cartridge weight:	3.5 to 8.5 g
Maximum weight:	18.5 g (with head shell)
Offset angle:	21.5°
Applicable tracking force:	0 to 3 g (0 to 29.4 mN) (direct readout of tracking force)
< Cartridge section >	
Type:	VM type
Output voltage:	2.5 mV
Separation:	More than 17 dB (33-1/3 rpm, 1 kHz)
Frequency response:	20 to 20,000 Hz
Compliance:	15 x 10^{-6} cm/dyne.
Stylus pressure:	2.5g (24.5 mN) (Normal)
Load impedance:	50 kohms
Load capacitance:	100 pF

- The specifications and external appearance of this set are subject to change without prior notice.

DISASSEMBLY INSTRUCTIONS

1. To Remove Tray

1) Remove the turntable platter TT sheet
2) Gently pull the tray out to its midway point
3) Press the left side of the tray as shown by the arrow and lift off. (See figure 1)

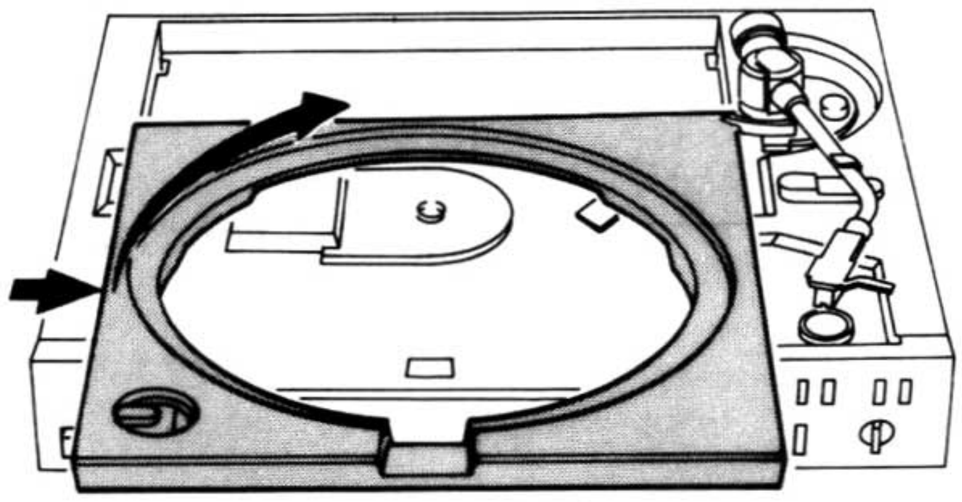

Fig. 1

2. To Remove Main Cabinet

1) Remove the headshell assembly, main weight and plate B (elevation). (See figure 2'
   Headshell assembly
   Plate B elevation
   Main weight

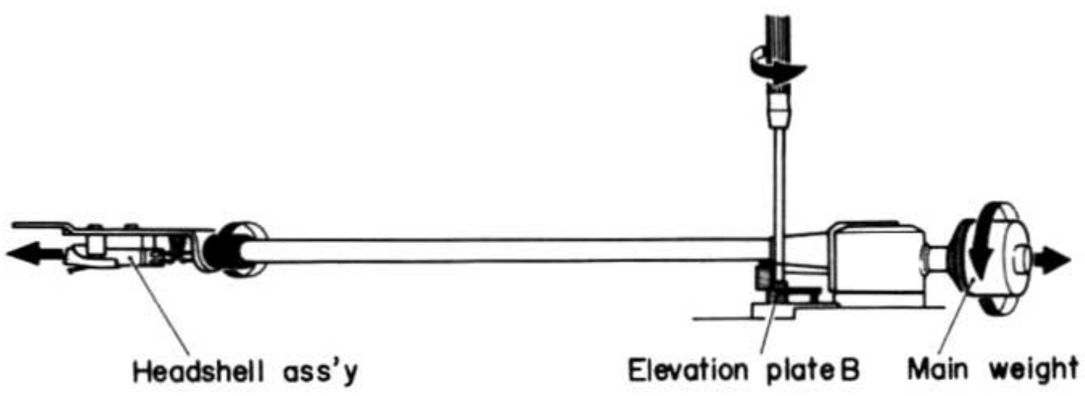

Fig. 2

2) Remove the tray (See figure 1)
3) Remove the cover (main cabinet) (See figure 3)

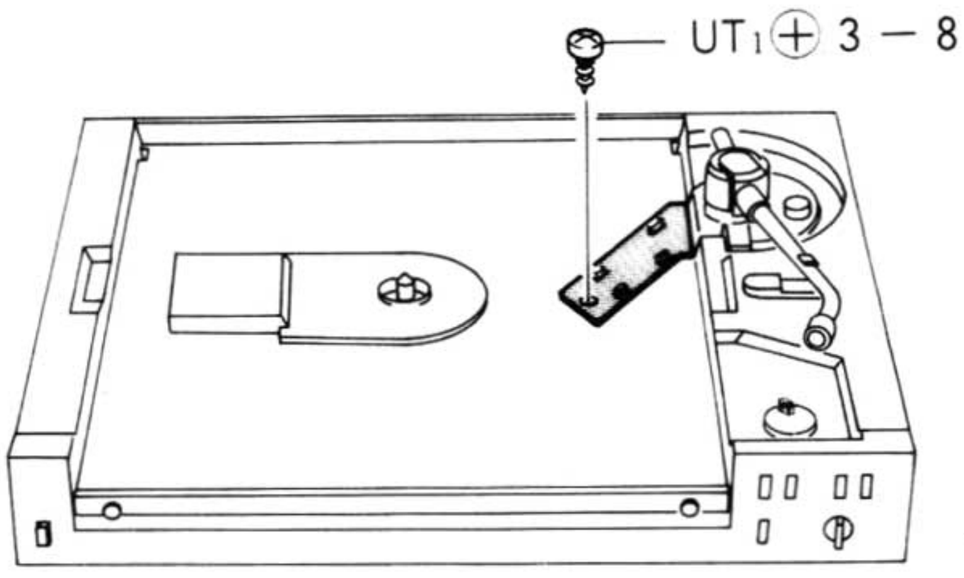

Fig. 3

4) Remove the 11 screws (See figure 4)

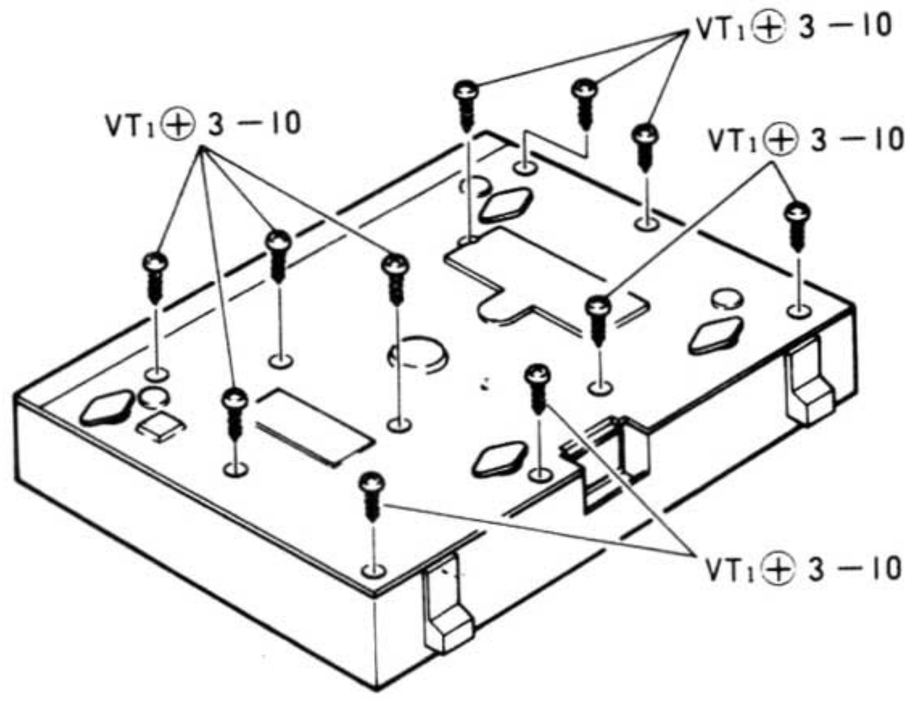

Fig. 4

5) While turning the main cabinet back and forth and from side to side, pull the main cabinet off in the direction of the weight shaft.
   Since removal of the main cabient is difficult, do not try to force it. (See figure 5)

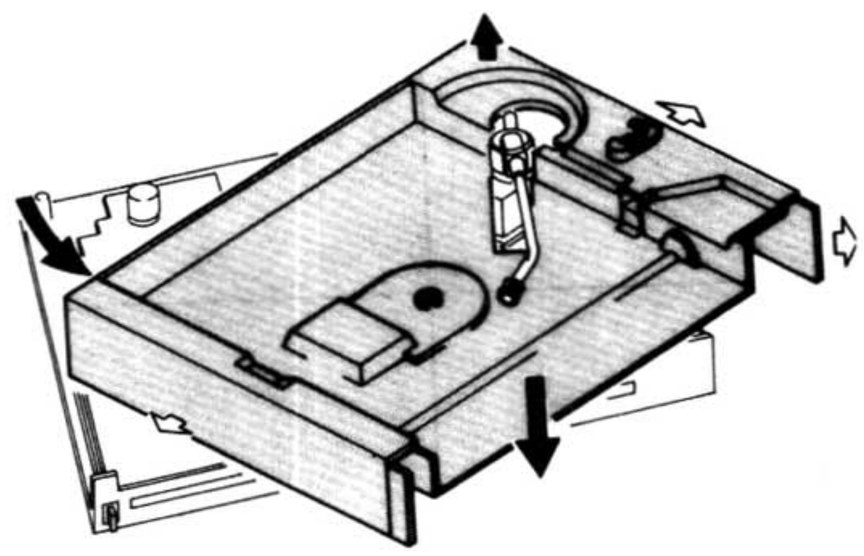

Fig. 5

Adjustments

1. Stylus Height Adjustment

1) Adjust the stylus height (with cueing lever in the UP position) as follows:

- **If too high**
  Turn the screw on the elevation plate to the right until the distance between record and stylus is 5 mm.
- **If too low**
  Turn the screw on the elevation plate to the left until the distance between record and stylus is 5 mm. (See figure 6

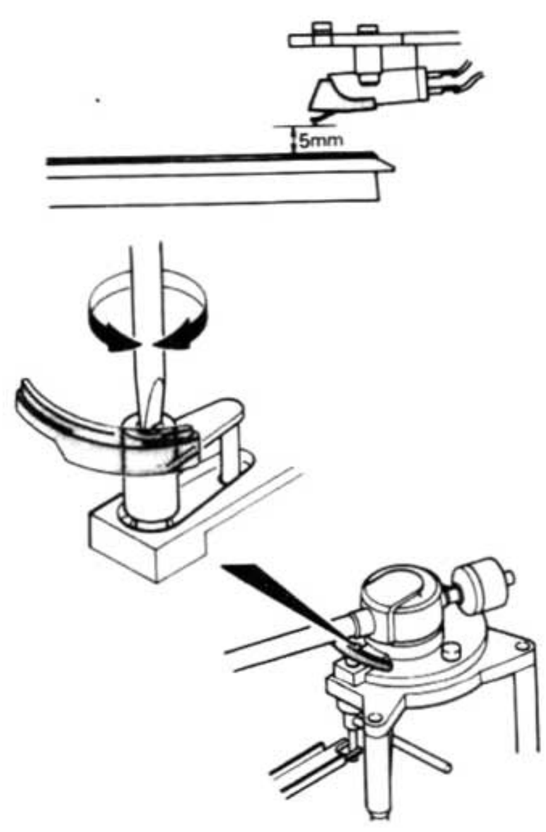

Fig. 6

Note: When adjusting, first set the record size selector to 30 cm, turn the power ON, press the LOAD PLAY/CUT button and after the arm descends on the disc, press the LOAD PLAY/CUT button once again. After the arm has returned then turn off the power and perform adjustments.

2. Stylus Height Adjustment during MANUAL UP Setting

1) Rotate the M4 screw on the UP/DOWN lever to the left or right to adjust stylus height during manual lifting of the arm.

- **If too high**
  Turn the screw on the UP/DOWN lever to the left
- **If too low**
  Turn the screw on the UP/DOWN lever to the right. (See figure 7)

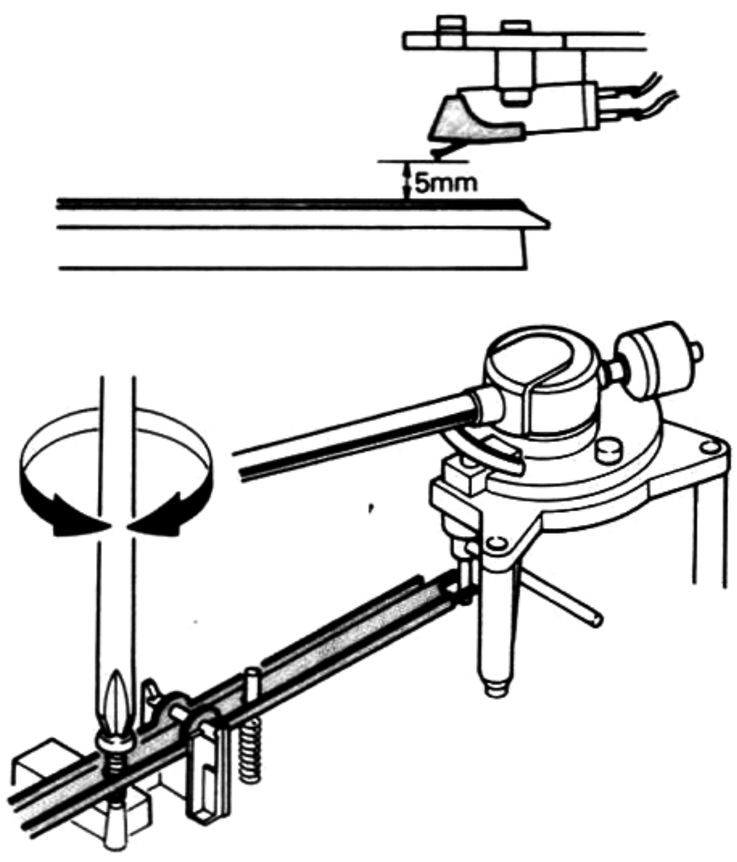

Fig. 7

2) After operating the cueing lever 4 or 5 times, check to make sure the stylus is within ±0.2 mm of 5 mm.

Note: Above is based on the "NOTE" in the previous article 1.

3. Friction Adjustments of the Manual Arm Carrier

There are two varieties of this model, those with 2-position and 3-position switching for the cueing lever. For this reason the cueing lever position will be different during friction adjustments. Therefore be sure to confirm the following:
During 2-position switching — in the UP position
During 3-position switching — in the UP/MANUAL position
However, on models with the UP/MANUAL position, note that step 2) is not required.

1) Make friction adjustments by turning the M4 screw on the manual lever to the left or right while moving the manual carrier lever back and forth. Make sure that the arm does not slip at this time.

- **If friction is too strong**
  Turn the screw to the left
- **If friction is too weak**
  Turn screw to the right
  (See figure 8)

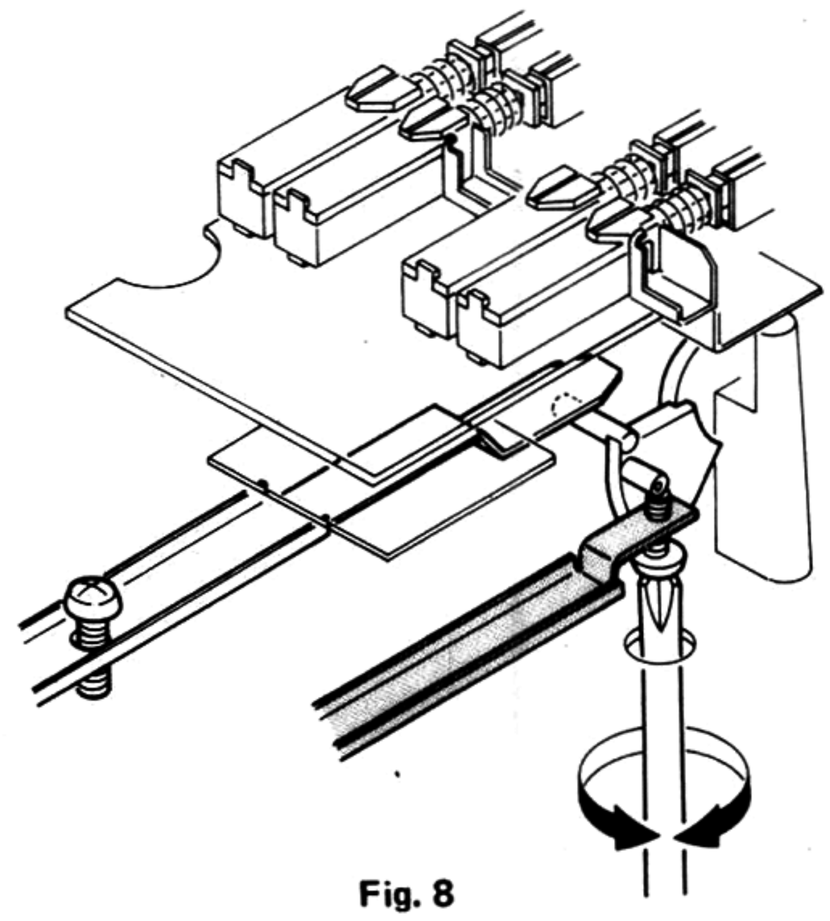

Fig. 8

2) After adjustments are completed, move the arm up and down. When the arm is up, make sure it will not skate over the record. If this occurs, it indicates the friction is too strong. Reduce friction by turning the adjustment screw by 1/8 of a turn to the left and test again.

Note: Only perform friction adjustments after stylus height has been set.

4. Re-sync Adjustment

1) Adjust the rec-sync mechanism so that the cassette deck function begins approximately 0.5 to 1 mm before the stylus comes in contact with the disc.

- **If too fast:**
  Loosen the screws and adjust by lowering the microswitch.
- **If too slow:**
  Loosen the screws and adjust by raising the microswitch.
  (See figure 9)

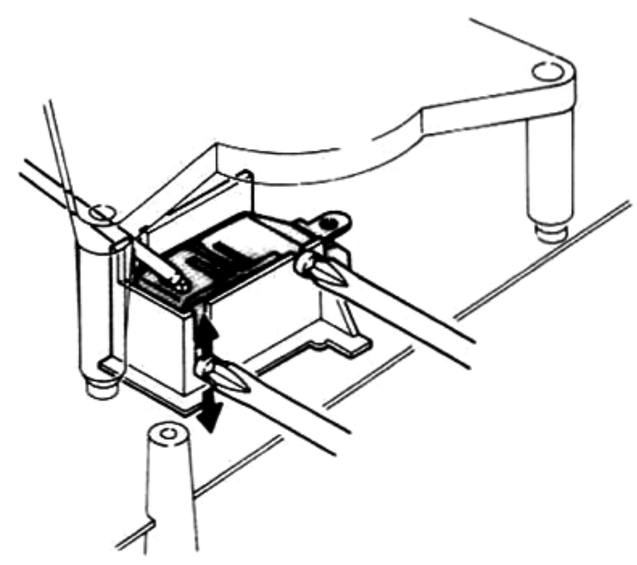

Fig. 9

2) When the cueing lever is in the UP position, make sure that deck operation comes to a halt. Confirm by operating cueing 3 or 4 times, then lock the microswitch in position with bonding glue.

Note: * Above adjustments should be performed after connecting unit to an AIWA deck having a PLAYER SYNC terminal.

5. Auto-in Adjustments

1) Use side A of the test record (ES-1008) to check auto-in adjustment.
   Listen to the counts of the record when the stylus shifts on it, and adjust the eccentricity gear cam to obtain a count of 13±4 (for 30 cm). (See figure 10)

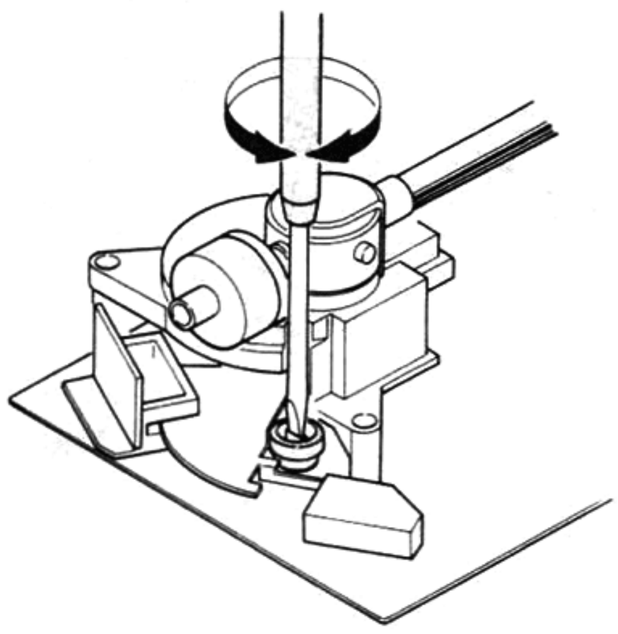

Fig. 10

2) Operate the above 2 or 3 times to confirm the proper count.

6. Auto Out Adjustment

1) Place the stylus on the test record's (ES-1008) auto-out groove by means of the manual arm carrier. When pressing the LOAD PLAY/CUT button to start operation, loosen the screw on holder A (end) and move the holder A (end) to the left or right until the a count of 18 to 22 (30 cm) is obtained. (See figure 11)

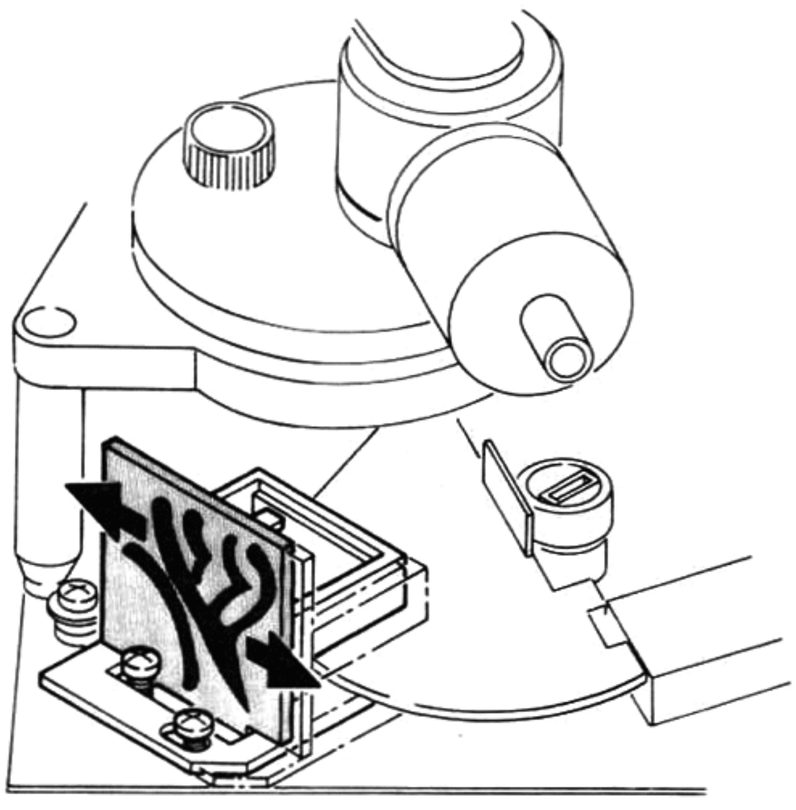

Fig. 11

- If count is less than 18~22 move the end sensor to the left
- If count is higher than 18~22 move the end sensor to the right

2) After adjustment, operate 2 or 3 times to make sure the count is within the specified range. Then set the record size selector to 17 cm and measure to see if the count is between 23 and 27 (17 cm). If outside the recommended specifications, re-check the adjustments made in the 30 cm setting.

7. Adjustment of Motor Assembly Height (When replacing motor)

1) The motor assembly in this unit is attached by means of 8 screws. When replacing the motor, make sure that there is about 11.5 mm of space between the chassis and motor assembly.
   If a specific uniform height is not maintained throughout, in some cases turntable's direct-dirve motor will not be able to engage itself. Therefore please pay particular attention to uniform height adjustment. (See figure 12)

motor assembly
chassis

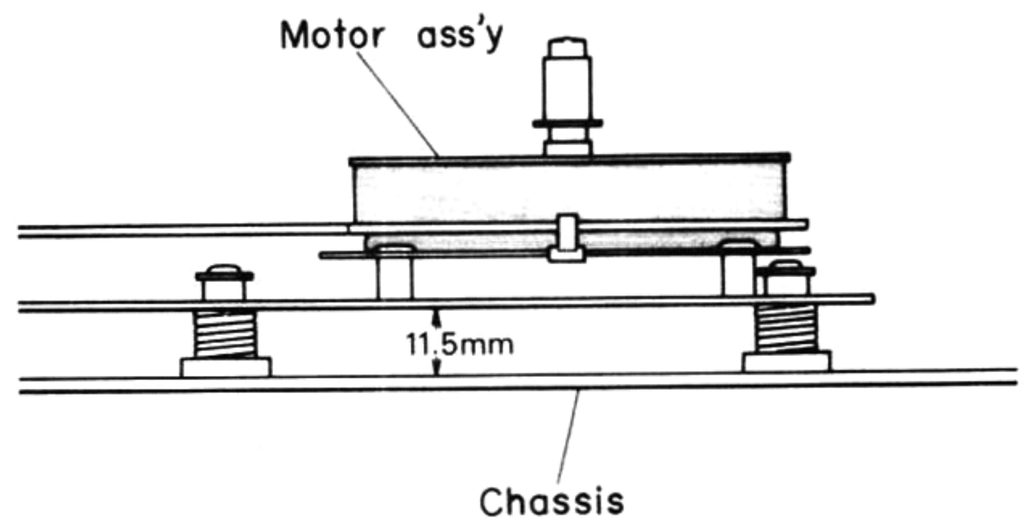

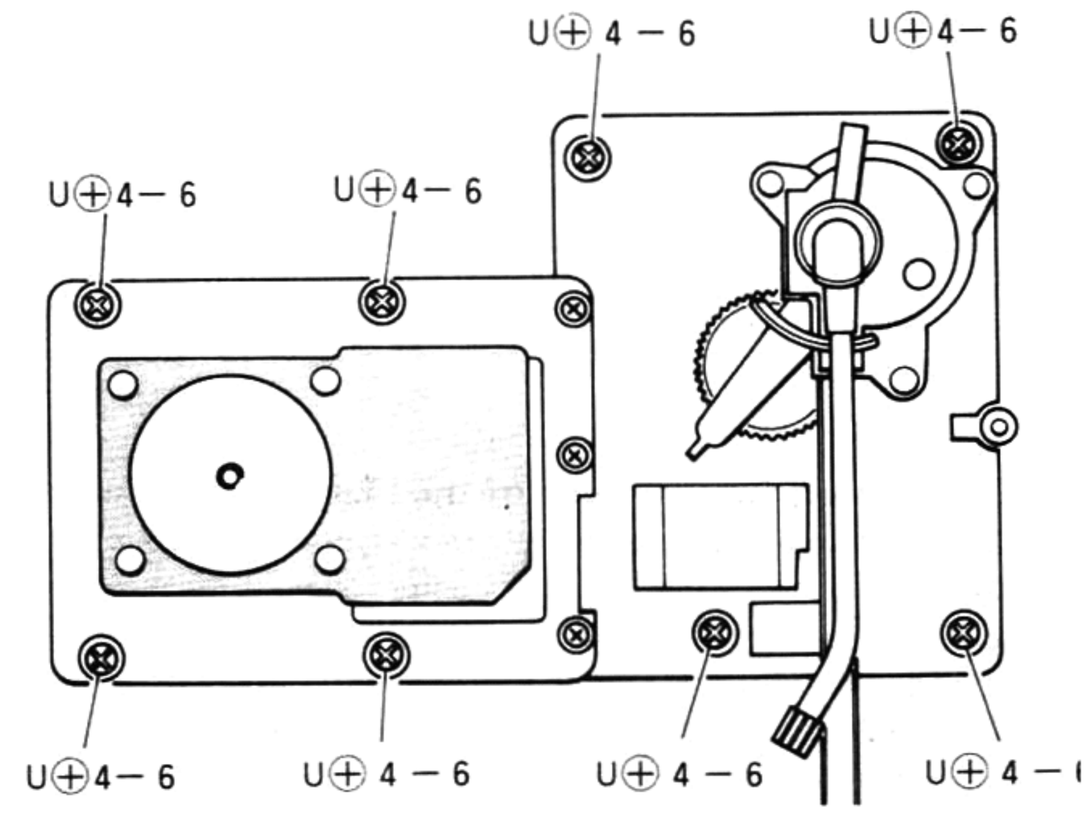

Fig. 12

☆ ☆ ☆ ☆ ☆ ☆ ☆ ☆ ☆ ☆ ☆ ☆ ☆ ☆ ☆ **MEMO** ☆ ☆ ☆ ☆ ☆ ☆ ☆ ☆ ☆ ☆ ☆ ☆ ☆ ☆ ☆

EXPLODED VIEW–1

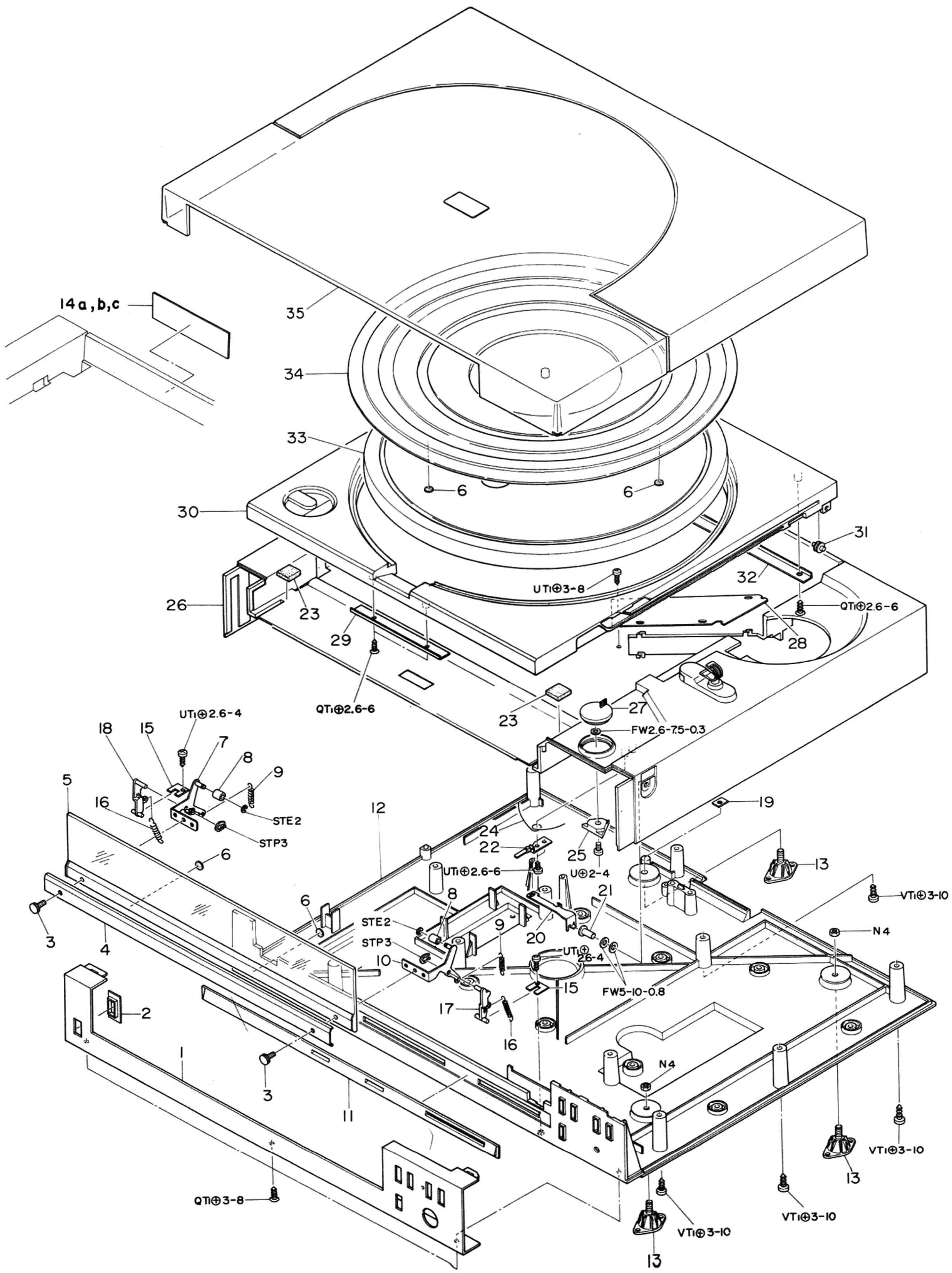

PARTS LIST

MECHANICAL PARTS

■ * mark in this part list shows exclusive part (which is used) for only Model No. AP-D50.

Ref. No.	Part No.	Part No. Changed to	Description	Common Model	Q'ty
1-1	84-117-044-01		Panel, Front	*	1
1-2	82-745-012-01		Guide, Push-button		1
1-3	84-117-028-01		Decorative screw 3—6	*	2
1-4	84-117-012-01		Cover, Window	*	1
1-5	84-117-004-01		Window, Front	*	1
1-6	84-184-373-01		Cushion		6
1-7	84-117-283-01		Lever G, Window ass'y	*	1
1-8	84-117-305-01		Roller, Window	*	2
1-9	84-117-307-01		E-spring, Lever FG	*	2
1-10	84-117-279-01		Lever F, Window ass'y	*	1
1-11	84-117-013-01		Frame, Front	*	1
1-12	84-117-002-01		Cabinet, Bottom	*	1
1-13	84-117-035-01		Rubber foot ass'y	*	4
1-14a	84-117-047-01		Name plate, Spec. (E model only)	*	1
1-14b	84-117-048-01		Name plate, Spec. (K model only)	*	2
1-14c	84-117-049-01		Name plate, Spec. (G model only)	*	1
1-15	84-117-303-01		Lever E, Window holder	*	2
1-16	84-117-306-01		E-spring, Lever E	*	2
1-17	84-117-289-01		Lever E, Window R	*	1
1-18	84-117-275-01		Lever E, Window L	*	1
1-19	84-117-330-01		Holder nut	*	1
1-20	84-117-292-01		Slide lever A	*	1
1-21	84-117-043-01		Stylus cleaner	*	1
1-22	84-117-291-01		Holder K, Slide lever	*	1
1-23	84-117-347-01		Cushion B, Career	*	2
1-24	84-117-314-01		T-spring, Cleaner	*	1
1-25	84-117-290-01		Holder B, Cleaner	*	1
1-26	09-041-053-01		Main cabinet ass'y		1
	84-117-036-01		Name, Stylus cleaner	*	1
	84-117-062-01		Arm rest ass'y	*	1
	84-117-020-01		Window, Strobo	*	1
	84-117-051-01		Label, Stylus change	*	1
	84-117-001-01		Cabinet, Main	*	1
	84-117-015-01		Guide roller holder ass'y	*	1
	84-117-326-01		C-spring, Guide roller	*	2
	84-117-270-01		Guide roller	*	2
	84-117-025-01		Illumination, Window	*	1
	87-410-304-01		W2—4.3—0.4		2
	87-441-001-01		STE1.2		2
1-27	84-117-022-01		Holder L, Cleaner ass'y	*	1
1-28	84-117-024-01		Cover, Main cabient	*	1
1-29	84-117-321-01		L-metal fitting, Carrier front	*	1
1-30	84-117-014-01		Carrier	*	1
1-31	82-439-317-01		Roller	*	2
1-32	84-117-322-01		L-metal fitting, Carrier back	*	1
1-33	84-117-005-01		Turntable	*	1
1-34	84-117-032-01		T, T sheet ass'y	*	1
1-35	84-117-055-01		Dust cover ass'y	*	1

EXPLODED VIEW–2

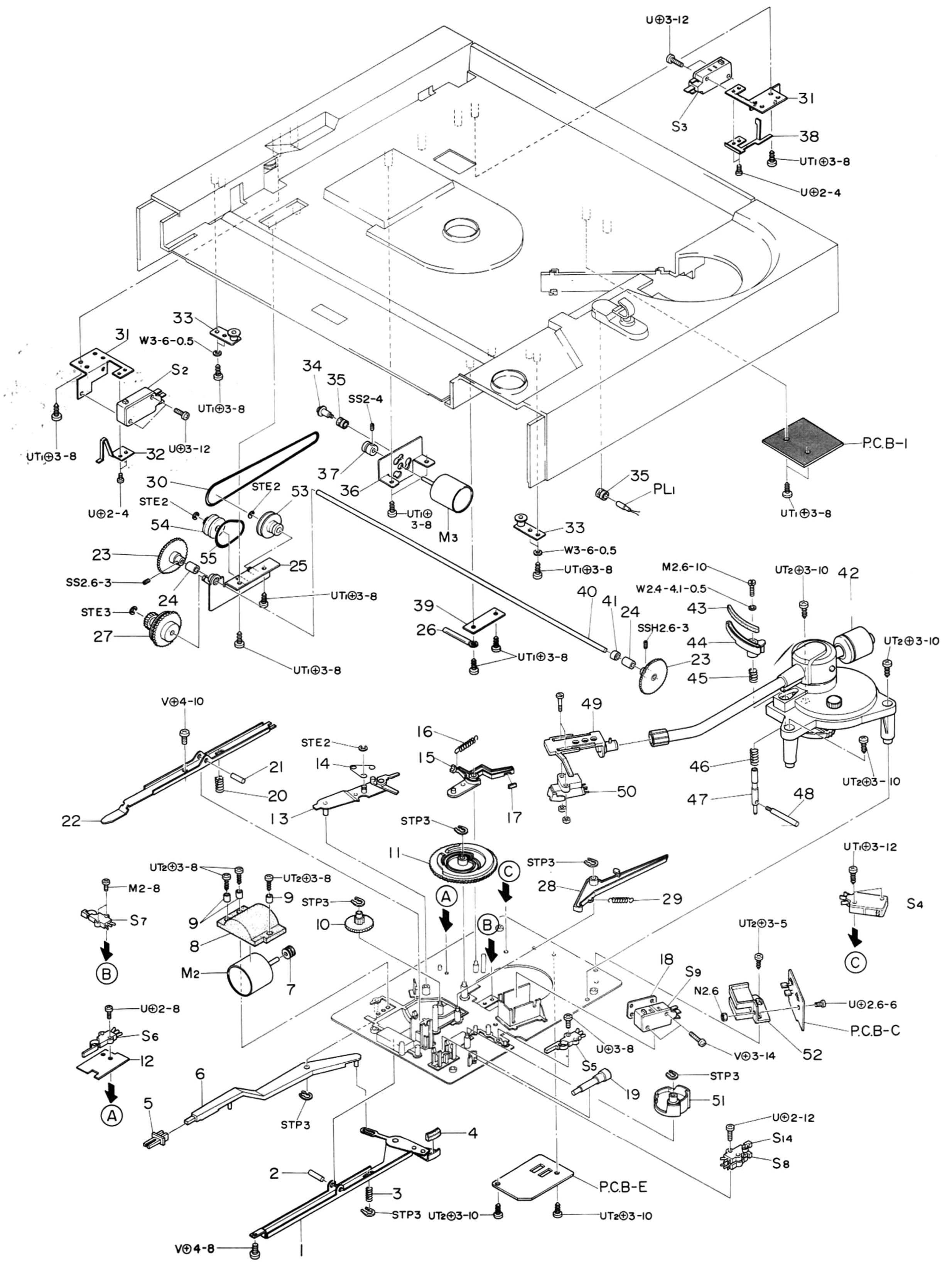

Ref. No.	Part No.	Part No. Changed to	Description	Common Model	Q'ty
2-1	84-117-234-01		Lever A, Manual ass'y	*	1
2-2	84-117-229-01		Shaft A	*	1
2-3	84-117-327-01		C-spring, Manual	*	1
2-4	84-117-315-01		Rubber B, Friction	*	1
2-5	84-117-010-01		Knob B, Arm carrier	*	1
2-6	84-117-240-01		Lever C, Manual	*	1
2-7	84-117-203-01		Worm gear, Motor	*	1
2-8	84-117-356-01		Holder C, Motor	*	1
2-9	87-085-135-01		Bushing 3-4-5		3
2-10	84-117-204-01		Gear A, Relay	*	1
2-11	84-117-205-01		Gear B, Drive	*	1
2-12	84-117-320-01		Switch plate B	*	1
2-13	84-117-207-01		Arm carrier lever ass'y	*	1
2-14	84-117-213-01		T-spring	*	1
2-15	84-117-214-01		Lever, Friction	*	1
2-16	84-117-328-01		E-spring, Friction	*	1
2-17	84-117-215-01		Felt, Friction	*	1
2-18	84-117-239-01		Plate A, Switch	*	1
2-19	84-117-232-01		Gear C, Size	*	1
2-20	84-117-228-01		C-spring, Up	*	1
2-21	84-117-323-01		Shaft A, Up-down	*	1
2-22	84-117-231-01		Lever, Up-down	*	1
2-23	84-117-253-01		Gear, Drive	*	1
2-24	84-117-325-01		Collar, Drive shaft	*	2
2-25	84-117-299-01		Holder E ass'y	*	1
2-26	87-038-039-01		Wire binder		2
2-27	84-117-261-01		Gear D ass'y	*	1
2-28	84-117-334-01		Arm stopper B ass'y	*	1
2-29	84-117-307-01		E-spring, FG	*	1
2-30	82-443-214-01		Belt, Main		1
2-31	84-117-301-01		Angle, Micro switch	*	2
2-32	84-117-302-01		Leaf lever, Micro switch	*	1
2-33	84-117-317-01		Plate N, Guide roller ass'y	*	2
2-34	87-081-483-01		Motor screw, M2.6		3
2-35	87-087-029-01		Rubber cushion		3
2-36	84-117-286-01		Holder B, Motor	*	1
2-37	84-117-361-01		Pulley, Motor		1
2-38	84-117-331-01		Leaf lever, Rear micro switch	*	1
2-39	84-117-300-01		Plate D, Holder	*	1
2-40	84-117-251-01		Shaft, Drive	*	1
2-41	84-195-257-01		Holder, Screw		1
2-42	09-041-054-01		Tone arm ass'y		1
	84-117-101-01		Tone arm	*	1
	82-285-236-01		Washer, Carrying handle		1
	82-416-341-01		Wave washer		1
	84-117-219-01		Arm plate ass'y	*	1
	84-117-223-01		Cum B	*	1
	84-117-313-01		E-spring, Cum B	*	1
	87-410-213-01		W3–6–0.5		1
	87-341-095-01		UT_1 + 3–8		1
	87-364-070-01		SSH2.6–3		2
2-43	84-117-029-01		Rubber, Elevation	*	1
2-44	84-117-042-01		Elevation plate	*	1
2-45	84-117-340-01		C-spring, Elevation	*	1
2-46	84-117-226-01		C-spring, Down	*	1
2-47	84-117-225-01		Shaft, Lifter	*	1
2-48	84-190-284-01		Shaft Q, Syncrate		1
2-49	84-117-951-01		Head shell	*	1
2-50	84-117-952-01		Cartridge ass'y	*	1
2-51	84-117-216-01		Cum A, Size select	*	1
2-52	84-117-218-01		Holder A, End	*	1
2-53	84-117-358-01		Pulley A	*	1
2-54	84-117-359-01		Pulley B	*	1
2-55	84-117-362-01		Belt	*	1

EXPLODED VIEW–3

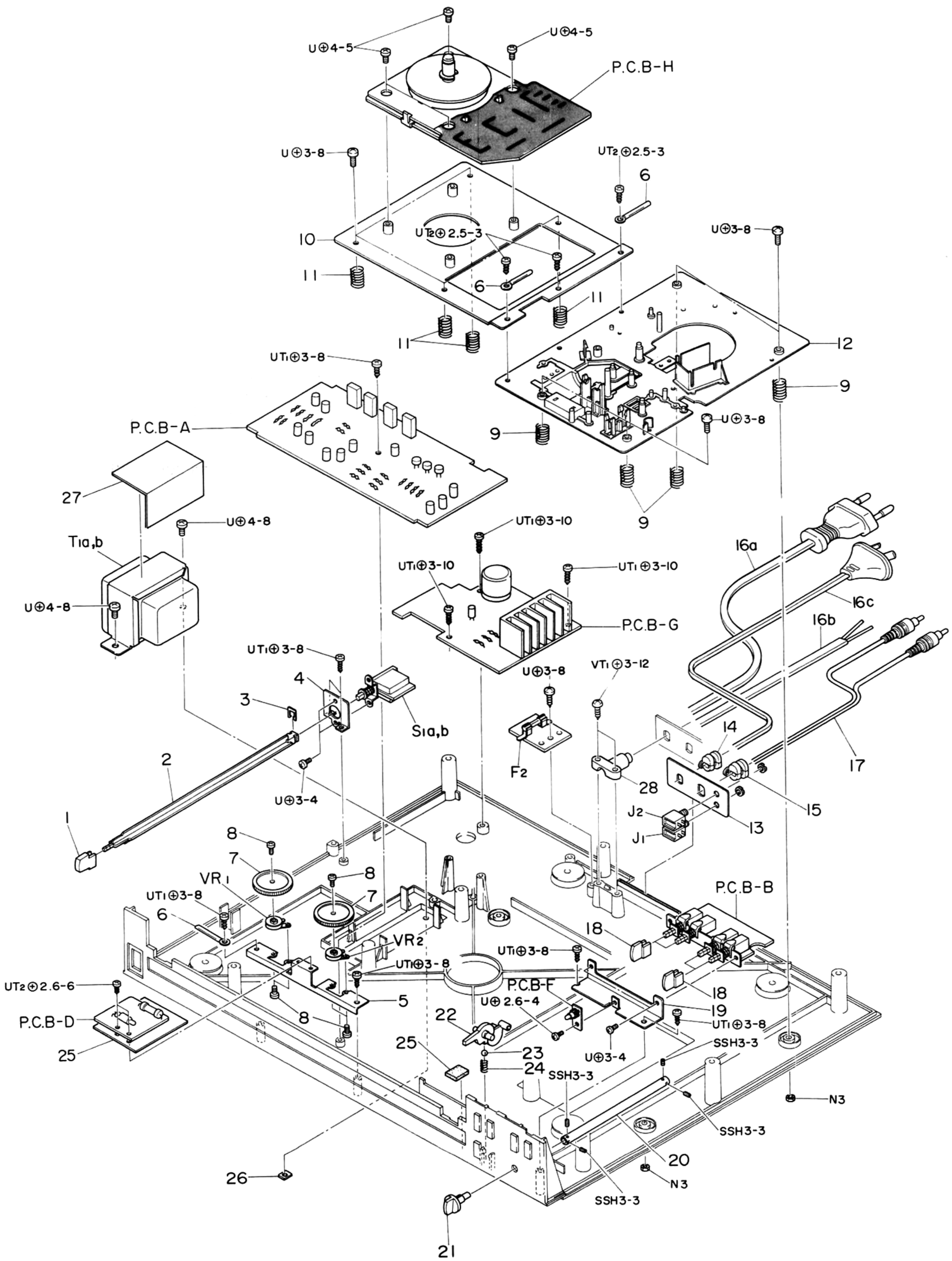

Ref. No.	Part No.	Part No. Changed to	Description	Common Model	Q'ty
3-1	82-745-010-01		Push-button C		1
3-2	82-385-382-01		Rod P		1
3-3	82-385-383-01		Stopper, Rod		1
3-4	84-117-244-01		Holder C, Power switch	*	1
3-5	84-117-245-01		Holder D, Volume	*	1
3-6	87-038-039-01		Wire binder		3
3-7	84-117-011-01		Knob, Volume	*	2
3-8	87-266-529-01		Screw, V + 1.7—4		6
3-9	84-117-247-01		C-spring, Damper	*	4
3-10	84-117-246-01		Motor chassis ass'y	*	1
3-11	84-117-350-01		C-spring, Damper N	*	4
3-12	84-117-201-01		Mechanism chassis ass'y	*	1
3-13	84-117-018-01		Jack plate	*	1
3-14	87-085-101-01		Cord bushing (G model only)		1
3-15	87-085-165-01		Cord bushing		1
3-16a	87-034-877-01		AC power cord (E model only)		1
3-16b	87-034-872-01		AC power cord (K model only)		1
3-16c	87-034-878-01		AC power cord (G model only)		1
3-17	84-199-606-01		Pin cord		1
3-18	82-745-009-01		Push-button B		4
3-19	84-117-243-01		Holder B, Push-switch	*	1
3-20	84-117-230-01		Shaft, Spring	*	1
3-21	84-117-009-01		Knob A, Disk size	*	1
3-22	84-117-227-01		Cum C, Up-down	*	1
3-23	87-073-006-01		Steel ball 3		1
3-24	84-117-242-01		C-spring, Lock	*	1
3-25	84-117-619-01		Sheet, Insulation	*	1
3-26	84-117-330-01		Holder nut M4—0.7	*	2
3-27	84-117-637-01		Sield plate P, T	*	1
3-28	87-085-166-01		Holder, AC power cord (E, K model only)		1

TROUBLE SHOOTING

1. Power system malfunctions

1.1 Neon lamp (NL1) remains on even if S1 (POWER) is turned to off position.

Cause Secondary load is open

1.1.1 Is Vcc being produced at the main and power source circuit boards? Also if SI is OFF, are several volts of Vcc being produced?

NO
- Is the fuse (F1) blown?
- Q1, D3 are open.
- Q2 is open.
- D4 is shorted.
- D1, D2 are open.
- The temperature fuse on T1 (PT) is cut.

1.1.2 Is Voltage being produced at the "+" terminal of C2? (With the armrest position.)

YES
- Is the fuse (F1) cut?

NO
- Is voltage (42~43V) being produced at Q1 (Collecter)

YES
- Check Q2 and Q3

NO
- Is voltage (18V) being produced at D3?

YES
- Q1 is open

NO
- D3 is shorted (at this time, voltage is 0V)

NO
- Check PT, D1 and D2.

1.2 Neon lamp will not come on

Lamp is defective.

1.3 Pilot lamp (PL1) will not come on when tray is in loaded position.

Does lamp come on when pressing the tray downwards? Is S3 (LOADING IN) stuck in the IN position?

YES
- Check the VCC
- Check S3

YES
- (Normal), is +B Votlage (15.5V) being produced?

YES
- Q27 is open, C15 is shorted.
- PL1 is cut. (if Q27 is operating normally)
- Fuse resistor (R69) is melted.

NO
- Q28 is open, D29 is shorted.
- Check operation of S3 (LOADING IN)

NO
- S3 or connecter is defective.

1.4 The pilot lamp (PL1) comes on, but produces excessive brightness.

Q28 is shorted, D29 is open.

1.5 Pilot lamp (PL1) will not go out even when tray is ejected.

Q27 is shorted, S3 (LOADING IN) or S3 operation is defective.

2. Tonearm operation system malfunctions

2.1 During manual operation, PL1 lights up when the tonearm is set over the turntable and with voltage produced at the NC terminal on S4 (ARM) the M1 (PHONO MOTOR) does not rotate.

Q26 is open, D25, D26 are open.

2.2 Tonearm does not descend in the same mode as 2.1, above.

Does M2 (Phono motor) rotate when the tonearm is set over the turntable?

YES
- Check for interference with arm lifter, mechanism system.

NO
- Is voltage being produced at D19 (cathode)? (+B: 15.5V)

YES
- Is 6V being produced at the M2 terminal?

YES
- Detach M2 from the gear section: does it rotate?

YES
- Check the remainder of the mechanism after the gears.

NO
- M2 is defective.

NO
- Short out between the collecter and emitter of Q20; does N2 rotate?

YES
- At that time, is approximately 6V produced between collecter and emitter of Q19?

YES
- Q20 is defective

NO
- When 6V is fed to M2 only, does it function normally?

YES
- Q19 is defective

NO
- Check M2 or adjoining mechanisms

NO
- Is voltage (15.5V) produced at Q16 (collector)?

YES
- D19 is defective

NO
- Is voltage at Q27 (collecter) below 0.2V?

NO
- If too high (1V or higher) check to see if standard pilot lamp is being used; check Q27 and others.

YES
- Check reasons why Q18 is on, and Q14, Q16, Q17, D14, S4 (arm). Also check C16 to see whether quantity of capacitor is correct.

2.3 Tonearm operation speed is too fast in the same mode as 2.1, above.

Q19 or Q28 are shorted.
(If Q28 is defective, PL1 will be excessively bright or loading speed will be too rapid.)

2.4 Eject operation is defective
During eject operation if the arm is set to the turntable, eject operation does not stop.

Is S4 (ARM) operating properly? (Is voltage present at the NC terminal?)

YES
- Is voltage produced at D6 (cathode side)?

NO
- D6 is open.

YES
- Q11 is defective.

NO
- Check S4 and nearby mechanism.

2.5 Tonearm does not move even if S10 (LOAD PLAY/CUT) is pressed. (Tray is IN, PL1 comes on, arm is on armrest, UP/DOWN lever is DOWN, size selector set to position other than manual.)
Arm does not return even if S10 is pressed.

Are there any irregularities at C6?

YES · C6 is defective.
NO · Is C7 shorted?
YES · C7 is defective.
NO · Is D11 open?
YES · D11 is defective.
NO · Is voltage being produced at D11 (cathode side)?
YES · Check for defects of S2. (LOADING OUT)
· If the NC terminal is connected to ground, it is normal.
NO · Are C5, C9 shorted?
YES · C5, C9 are defective.
NO · Is C8 shorted?
YES · C8 is defective.
NO · Is there a short between collecter and emitter in Q18?
YES · Q18 is defective.
NO · Is voltage at Q14 (collecter) 0?
· Is voltage at Q17 (collecter) +B (15.5V)?
NO · Q14, Q17 are defective.
YES · Is voltage at D19 (cathode side) +B (15.5V)?
NO · D19 is open.
YES · Is voltage (+5.8~15.5V) being produced at Q19 (emitter)?
YES · Is voltage at Q20 (collector) 0V?
YES · Remove M2 (full auto motor) from terminal and apply 6V current; does M2 remote?
NO · M2 is defective.
YES · Mechanism system is defective.
· Are gears rotating?
YES · During rotation does the reverse lever function?
YES · Move the tonearm by hand; does it move with difficulty or easily?
If heavy: Mechanism system
If light: Normal
NO · Is the hook which protrudes from the arm plate interfering with arm operation?
NO · Is voltage being produced at + side of C15?
YES · Q20 is defective.

2.6 Even if tonearm is lowered, it quickly lifts up and returns to armrest.

Does this occur when arm is set at any point on the turntable?
YES · At the instant the arm should lower, does S6 (main gear) change from NO terminal to NC terminal?
NO · Adjust as S6 changes from NO terminal to NC terminal by means of mechanical adjustment. (for switch stroke or gears, etc.)
If C6 is shorted or C9, D20, Q18 are defective (at this time, arm would move back and forth).
NO · At the point where the arm returns, is voltage (about 23V) produced at Q25 (emitter), and is voltage produced at a point where the arm does not return (just before the end position)?
YES · Improper assembly position of end sensor.

2.7 When size selector is in position other than manual, when S1 (POWER) is turned ON, the arm repeatedly moves back and forth.

Does this cease when the size selector is set to the manual position?
NO · (1) is the S6 (MAIN GEAR) operating properly during arm operation?
YES · C9, D20 are open or Q18 is defective.
· Q13, Q14 or Q17 are shorted.
· Q13, Q14 or Q17 are defective.
· Q13 is defective.
NO · Check S6
NO · (2) is voltage always produced at Q25 (emitter)?
NO · Is voltage always produced at the base of Q25?
NO · Q25 is defective.
YES · Q1 or Q2 (PN150) is shorted.
YES · Sensor holder is mis-positioned or disconnected.

2.8 Even if size is selected, arm does not stop at correct point. Cuing lever is in DOWN position.

Can the arm be moved easily by hand?
YES · Check operation of arm's cam position and arm stopper.
NO · Check mechanism for resistance or interference with arm.

2.9 Instability of arm stopping position. Arm does not stop at edge of record.

Does arm function smoothly?
NO · In case of abnormal movement of tone-arm, are braking functions normal?
YES · Is the gasket on the manual arm carrier plate making contact with the arm?
YES · Check mechanism.
NO · Confirm horizontal setting of the unit.

2.10 Play does not begin if tray is pushed in by hand, and when S10 (LOAD PLAY/CUT) is pressed or pressed twice. (Tone arm does not operate.) Tray is at IN position, PL1 lights up and size selector is at a position other than manual.

Does play begin when S10 is pressed with tray completely inserted?
Refer to section 2.5.

2.11 With tray in OUT position, does play begin with S10 (LOAD PLAY/CUT) pressed only once?

2.11.1 Is S2 (loading out) operating normally?
Cause might be that the trigger pulse time from C6 is longer than the switching from the NC to NO terminal on S2.
YES · C6 is overloaded.
NO · Check S2.
2.11.2 Cause might be that S10 (LOAD PLAY/CUT) is defective and trigger pulse is generated twice or delayed.
YES · S10 is defective.

2.12 With size selector in manual position, are starts to operate when S10 (LOAD PLAY/CUT) is pressed.

S8 (MANUAL-1) is defective.

2.13 With size selector set to manual, arm returns when end is detected.

S14 (MANUAL 2) is defective.

2.14 End detector operates with size selector at 17, but not at 25 or 30, or vice versa.

Is S5 (size) operating normally?

YES · Q1, Q2 (PN150) are defective.

NO · S5 is defective.

2.15 End detector position is very irregular.

Mis-connection of cover plate or sensor holder.

3. Loading malfunctions

3.1 Unit does not load. (Tray pressed by hand)

Is S2 (Loading out) changed as tray's movement?

NO · S2 is defective.

YES · Arm is on armrest. [Is voltage present at NC terminal of S4 (Arm)?]

YES · Is Q6 shorting?

YES · Q6 is defective.

NO · When the base of Q7 is connected to +B Line with 1 kohms resistance. Does M3 (loading motor) rotate and perform loading?

NO · Is voltage present at Q5 (collector)?

NO · Is Q4 shorted?

YES · Q4 is defective.

NO · Is voltage present at the NO terminal of S3 (Loading in)?

YES · Is +B (15.5V) present?

NO · When the base of Q3 is connected to +B line with 10 kohms resistance, instantly after the above connection is voltage present at the Q5 collector?

YES · Is C3 open?

YES · C3 is defective.

NO · Is D27 open?

YES · D27 is defective.

NO · Load of C3 is insufficient.

NO · Check Q3, Q5; open D3.

3.2 Operation of "PLAY" can be done by S10 at Tray is in position, however, Tray does not go in except by hand.

D2 is open or Q1 is shorted.

3.3 Eject does not function when S12 (Eject) button is pressed (loaded position).

Is PL1 lit up?

YES · Is the arm on the armrest?

YES · Is S4 (Arm) at the NO terminal position?

NO · Check S4 and nearby mechanism.

YES · Q11 shorted?

YES · Q11 is defective.

NO · When 1 kohms resistance is applied from the +B line through the base of Q10, does M3 (loading motor) rotate and perform ejection?

NO · Either Q8, Q10 or M3 is defective.

YES · Is C2 shorted?

NO · Is voltage (+B: 15.5V) present at Q2 (collector)? (From the time S12 is pushed to the time ejection is completed.)

YES · (If voltage is present)

· Is voltage present at + side of C2?

NO · Check S2. (loading out)

(It must be at the NC terminal.)

NO · When no voltage is present at Q2 (collector), 10 kohms resistance is very briefly applied from the +B to the base of Q1.

Does Q2 come on (i.e. is voltage present)?

NO · Q2 is off.

· Is S2 (Loading out) in the NC terminal position?

YES · Q1 or Q2 is defective.

NO · S2 is defective.

YES · Is C1 open?

YES · C1 is defective.

NO · Insufficient actual volume of capacitance of C1, or S12 defective.

NO · Tonearm has returned to armrest.

3.4 While tray is being loaded when arm is moved from armrest to turntable, loading operation does not stop.

Is S4 (arm) operating normally? (Does it switch from NO to NC terminal, with voltage present at NC terminal?)

YES · Is voltage present at D7. (Cathode Side)

YES · Q6 is defective.

NO · D7 is open.

NO · Check mechanism in area of S4.

3.5 Immediately after tray is loaded in, tray comes out without staying in position. (PL1 is on)

S12 (EJECT) is shorted. (same as in ON mode)

4. Repeat operation malfunction

4.1 S11 (REPEAT) is pressed and repeat indicator (D1) comes on; even if S1 (power) is set to OFF, the repeat indicator remains on.

Is there voltage present at VCC, +B (15.5V)?

Is D3 shorted?

NO · Change the spark killer C1 from 0.1 μF +120 Ohms to 0.0033 μF + 120 Ohms. Also, change the D1 for higher zener breakdown voltage.

4.2 Even if S7 (REPEAT) is pressed, repeat operation is not performed. Size selector is set to other than manual. Repeat operation does not function other than when record end is detected. Repeat indicator is normal.

When S7 is pressed, does repeat indicator come on? Also, is D22 (cathode) connected to GND?

NO · Check S7.

YES · Does the end detector function? [Is voltage present at D16, D17 (Anode side)?]

NO · Is voltage present at the base of Q25?

YES · Q25 is defective.

NO · Is voltage present at Q1, Q2 (PN150) (emitters)?

YES · If S5 (size) is normal, then the wire has been cut.

NO · Q1, Q2 (PN150) are defective.

· D1, D2 (LN55) are defective [S14 (Manual-2) is normal.]

YES · (Does not repeat play)

Case (1) If the arm returns to the armrest.

Case (2) If the arm remains as it is at the end of play.

Case (1)

Is the repeat memory set? [Is 3.5V present at Q22 (Collector)?]

NO · Is voltage present in D7 (cahode side) when the end is detected?

YES · Is voltage present at D13 (cathode side)?

YES · D12 is shorted.

NO · Is Q22 shorted?

YES · Q22 is defective.

NO · Is C11 shorted?

NO · If 10 kohms of resistance is very briefly fed through +B line to the Q22 collector, does voltage continue at Q22?

NO · Q23 or Q24 are defective.

YES · With the arm set on the armrest and applying some amount of voltage of end detection to +B line circuit of end detector, is 0.7V present at Q29 (Collector)?

NO · D22 or Q29 is defective.

[D22 (cathode) is connected to a ground.]

YES · Is voltage presented at Q21 emitter?

NO · Check S7.

YES · Is voltage present at Q21 (collector)?

YES · Q19 or Q20 is defective. (Confirm that PL1 is on.)

NO · Q21 is defective.

[Attention to S6 (MAIN GEAR) and S7 (REPEAT) whether timing is proper or not.]

Case (2)

Is D16 open?

YES · D16 is defective.

NO · Move the arm by hand, and when it is over the turntable, check whether it will go down or not.

· Refer to 2.2.

4.3 With the size selector in a position other than manual, S1 (REPEAT) is pressed.

(1) Tonearm is returned by hand.

(2) S10 (LOAD PLAY/CUT) is pressed, and when the arm is returned it continuous to play.

[1] If once the repeat memory is set it cannot be reset again (not including when power is off.).

[2] D 16 is shorted.

Case [1]

Is D24 open? [case [2]], also is D23 open? [case [1]]

Also is C10 open or improper volume of capacitance, Q22 is defective.

Concerning D23:

During play, is voltage at + side of C10 High (+B) or Low (0V)?

If High: C10, D23 are open.

If Low: S7 (Repeat) is defective (should be low).

In conjunction with D24:

D24 or Q22 is defective.

Case [2]

D16 is defective.

(Repeat memory is set together with auto memory.)

4.4 When S7 (Repeat) is pressed, arm returns when S12 (Eject) is pressed, the tray slides out; when tray moves in, even though S10 (LOAD PLAY/CUT) is not pressed play begins.

CAUSE Since the repeat memory is not reset by the arm's return, M2 (Full auto motor) rotates slightly when the arm returns; After S6 (Main gear) switches from the NC to the NO terminal, the tray lifts up slightly and S3 (Loading in) switches from the NO to NC terminal, the pilot lamp goes out, M2 (full auto motor) stops. When the tray goes in once again immediately after this tray comes out while M2 (full auto motor) is able to rotate.

Is D13 open?

NO · D24 is shorted or Q27 is defective.

YES · D13 is defective.

4.5 Repeat play functions even if S11 is not pressed. (Size selector is in position other than manual.)

Check Q21. (between collector and emitter)

4.6 Repeat indicator does not light.

[Size selector is not in manual position.]

S8, S14 (NC terminal position)

Is operation of S8, S14 (Manual 1, 2) normal?

YES · Repeat indicator is open.

· D1 (HZ6B1) is open.

NO · Adjust position of S8 or S14.

4.7 After S11 (Repeat) is pressed and repeat indicator comes on, repeat indicator does not go off when size selector is set to manual.

Check S8, S14. (manual, 1,2)

5. Other malfunctions

5.1 Adjustment of Rec-sync timing.

Adjust the height of S9 (Rec-sync).

5.2 Remote control does not function.

If unit does not operate with S10 (LOAD PLAY/CUT), refer to 2.5, 2.6, 3.1 and 3.2.
If unit does operate with S10, does it operate if 12V are briefly sent from J1 (Remote)?

YES · Remote cord or remote unit is defective.
NO · D10 or J1 is defective.

ACCESSORIES/PACKAGE

Ref. No.	Part No.	Part No. Changed to	Description	Common Model	Q'ty	
1a	84-117-856-01		Printed indiv., Packing	*	1	
2	84-117-852-11		Cushion front, Printed indiv.	*	1	
3	84-117-853-01		Cushion R, Printed indiv.	*	1	
4	84-117-854-01		Cushion A, Auxiliary	*	1	
5	84-117-855-01		Sheet, Auxiliary	*	1	
6	84-117-861-01		Bag, Foamed mat	*	1	
7	84-184-860-01		Foamed mat		1	
8	84-196-858-01		Foamed mat		1	
9	87-051-132-11		Poly-vinyl sack		3	
10	87-051-171-11		Poly-vinyl sack		1	
11	87-056-604-01		Poly-vinyl sack		1	
12	87-056-608-01		Poly-vinyl sack		1	
13a	84-117-906-01		Instructions booklet (E model only)	*	1	
13b	84-117-907-01		Instructions booklet (K model only)	*	1	
13c	84-117-908-01		Instructions booklet (G model only)	*	1	
14	87-056-009-41		Distributors list		1	
15	87-056-032-01		Guarantee card (G model only)		1	
16	87-056-008-01		Label, AC power cord (K model only)		1	
17	84-190-965-01		Adapter, 45		1	
18	85-439-002-01		Syncrate cord CW-150K		1	

AIWA CO., LTD.

Printed in Japan

SCHEMATIC DIAGRAM—1

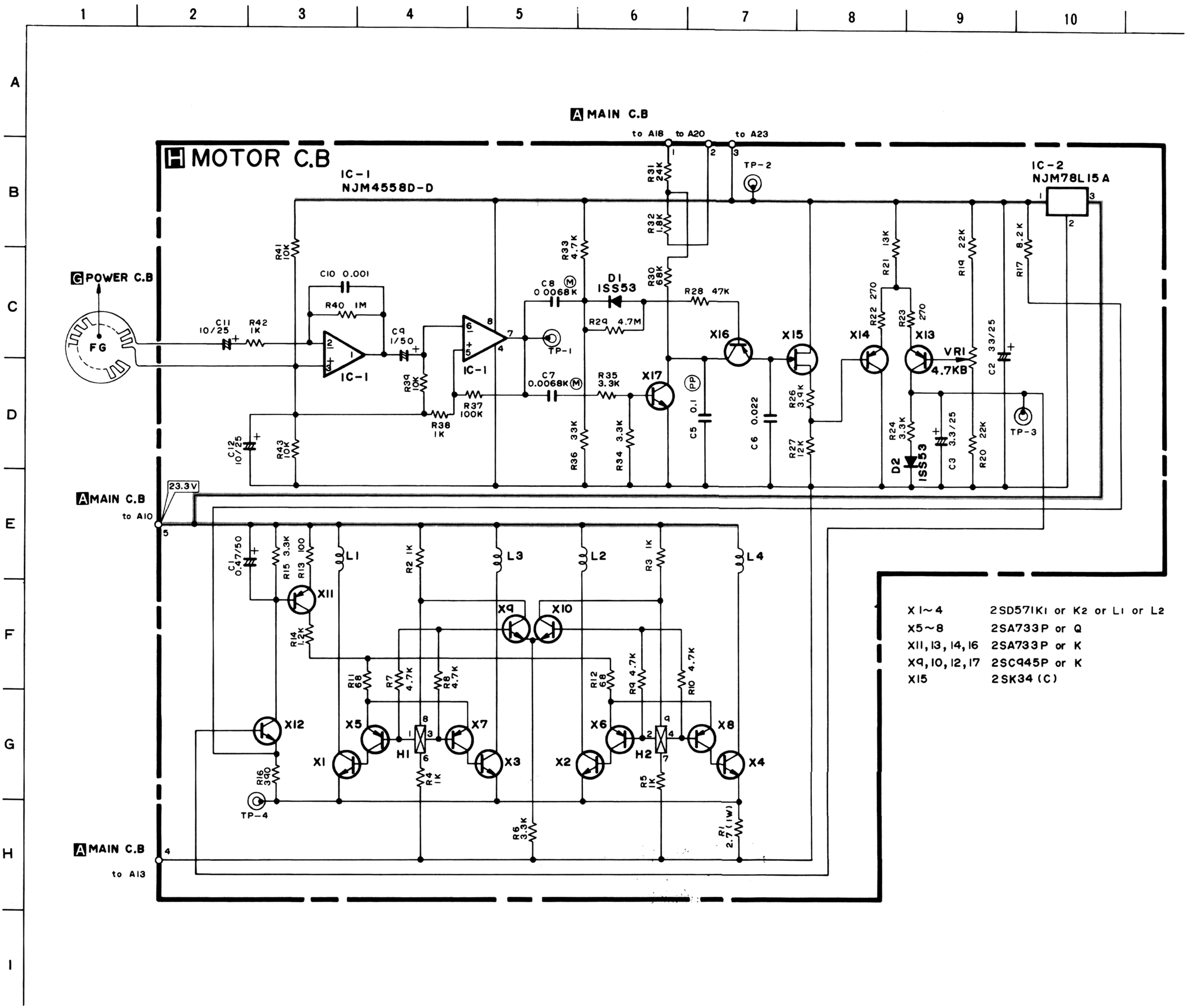

SCHEMATIC DIAGRAM–2

S1	POWER	(OFF)
S2	LOADING OUT	
S3	LOADING IN	
S4	ARM	
S5	SIZE	(30,25)
S6	MAIN GEAR	
S7	REPEAT PULS	(ON)
S8	MANUAL–I	
S9	REC SYNC.	(OFF)
S10	PLAY/CUT	(OFF)
S11	REPEAT	(OFF)
S12	EJECT	(OFF)
S13	SPEED	(33)
S14	MANUAL–2	

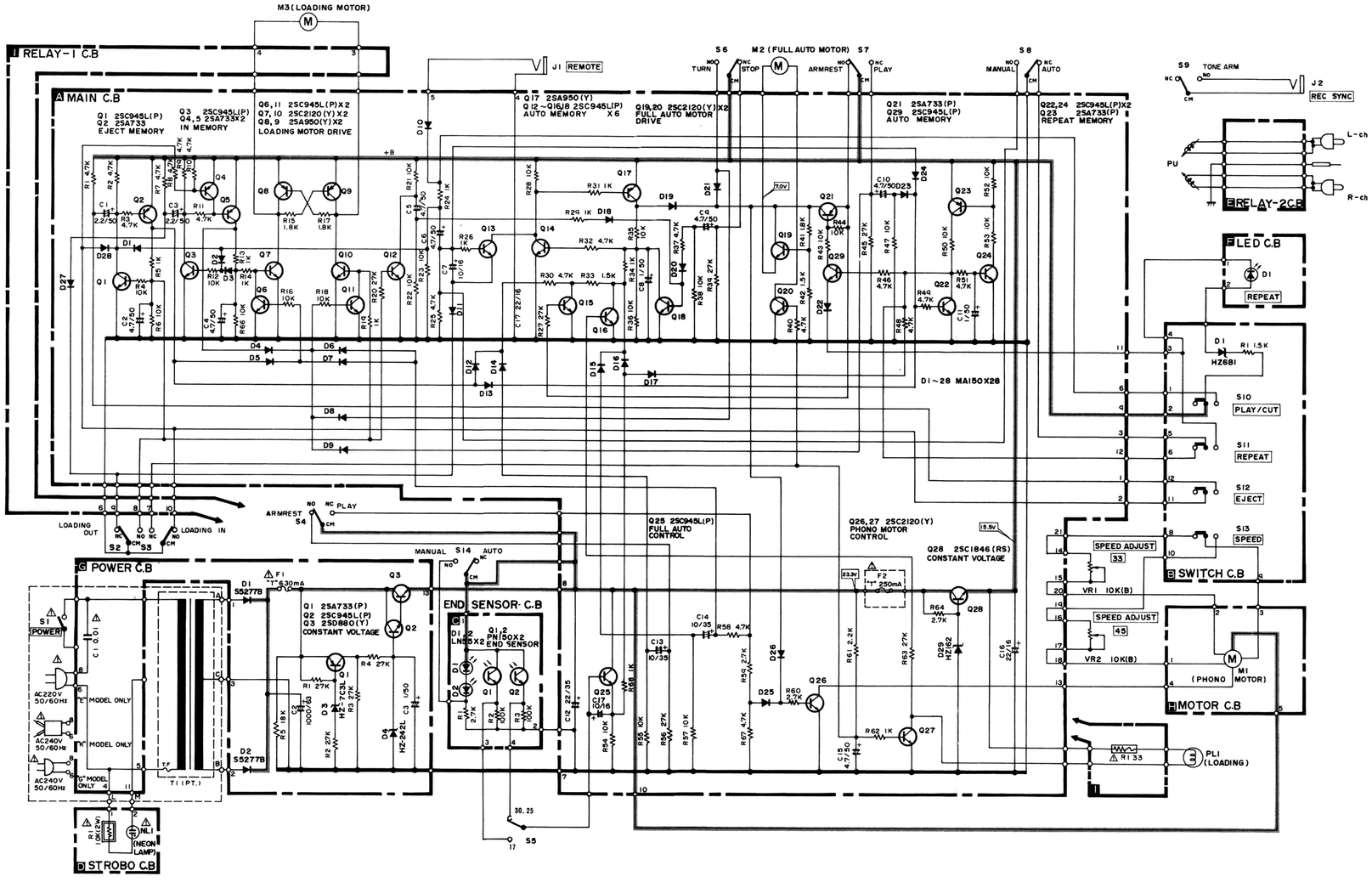

NOTES:

1) ▬ B (+) power supply
2) The voltage is the reference value measured with a tester (20 k-ohms/V DC) when there are no signals.
3) Resistors with no designation have a rated power of ¼W and a tolerance of ±5%.
4) Capacitors with no designation have a dielectric strength of less than 50WV.
5) The only capacitor tolerances indicated are ±5% (J) and ±10% (K).
6) Explanation of symbols
   - (M) Mylar capacitor
   - (PP) Polypropylene film capacitor
   - Fuse resistor
   - Nonflammable resistor
   - ⚠ Safety component symbol

   This symbol is given to important parts which serve to maintain the safety of the product, and which are made to conform to special safety specifications. Therefore, when replacing a component with this symbol, make absolutely sure that you use a designated part.

   This schematic diagram is subject to change without notice in the interests of improved performance.

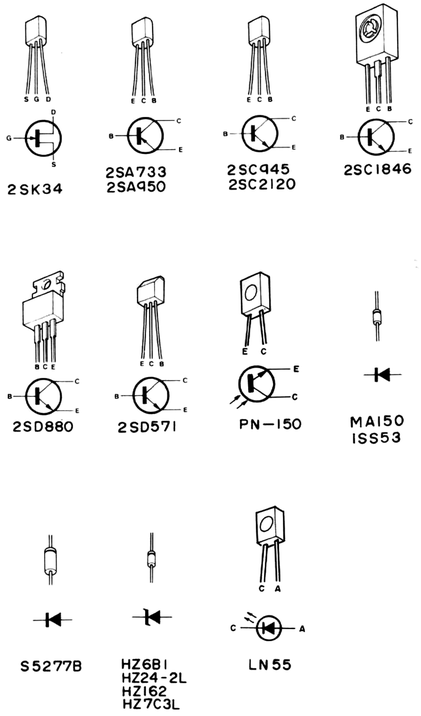

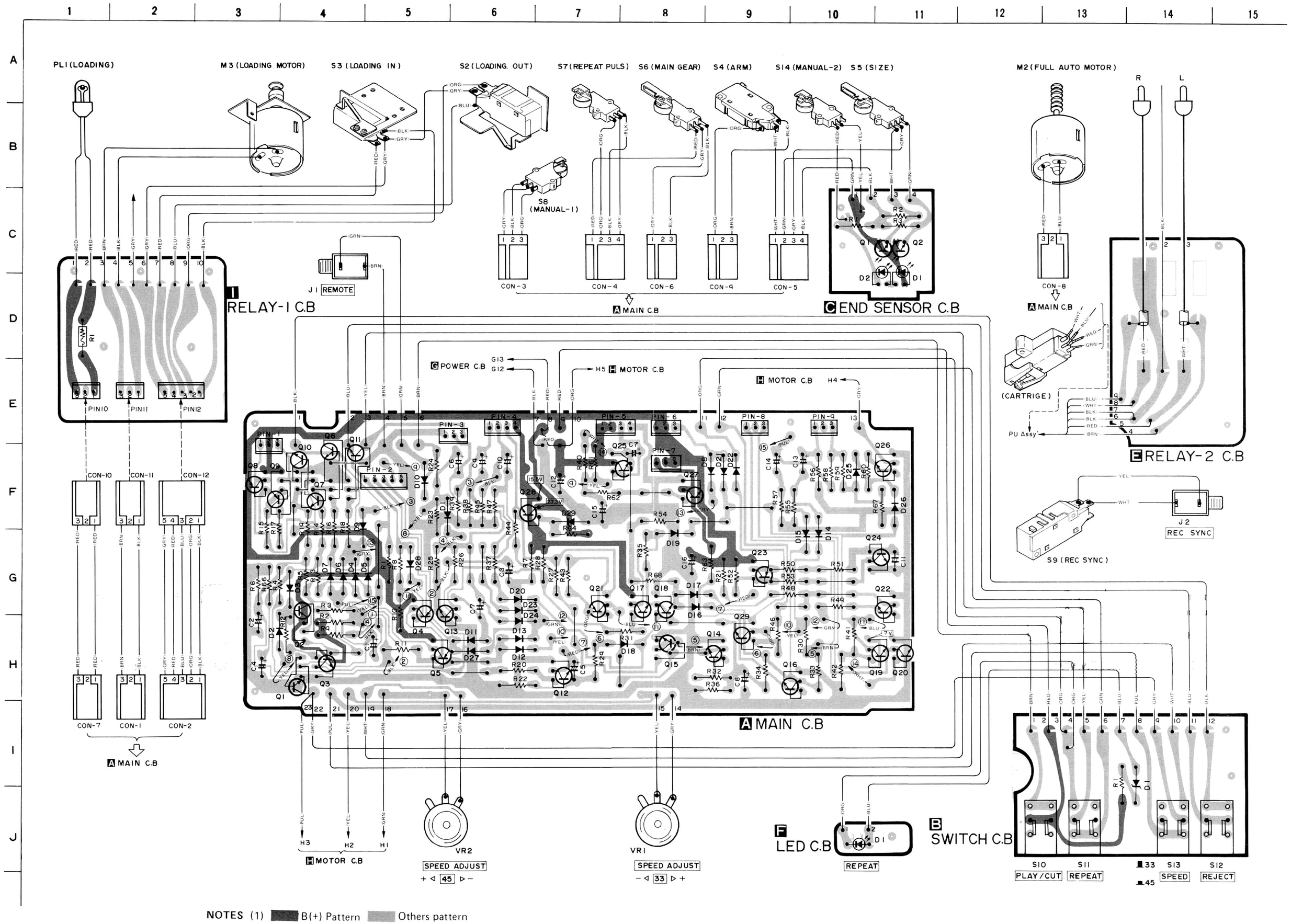

NOTES (1) B(+) Pattern Others pattern

(2) The voltage is the reference value measured with a tester (20 K ohms/V DC) when there are no signals.

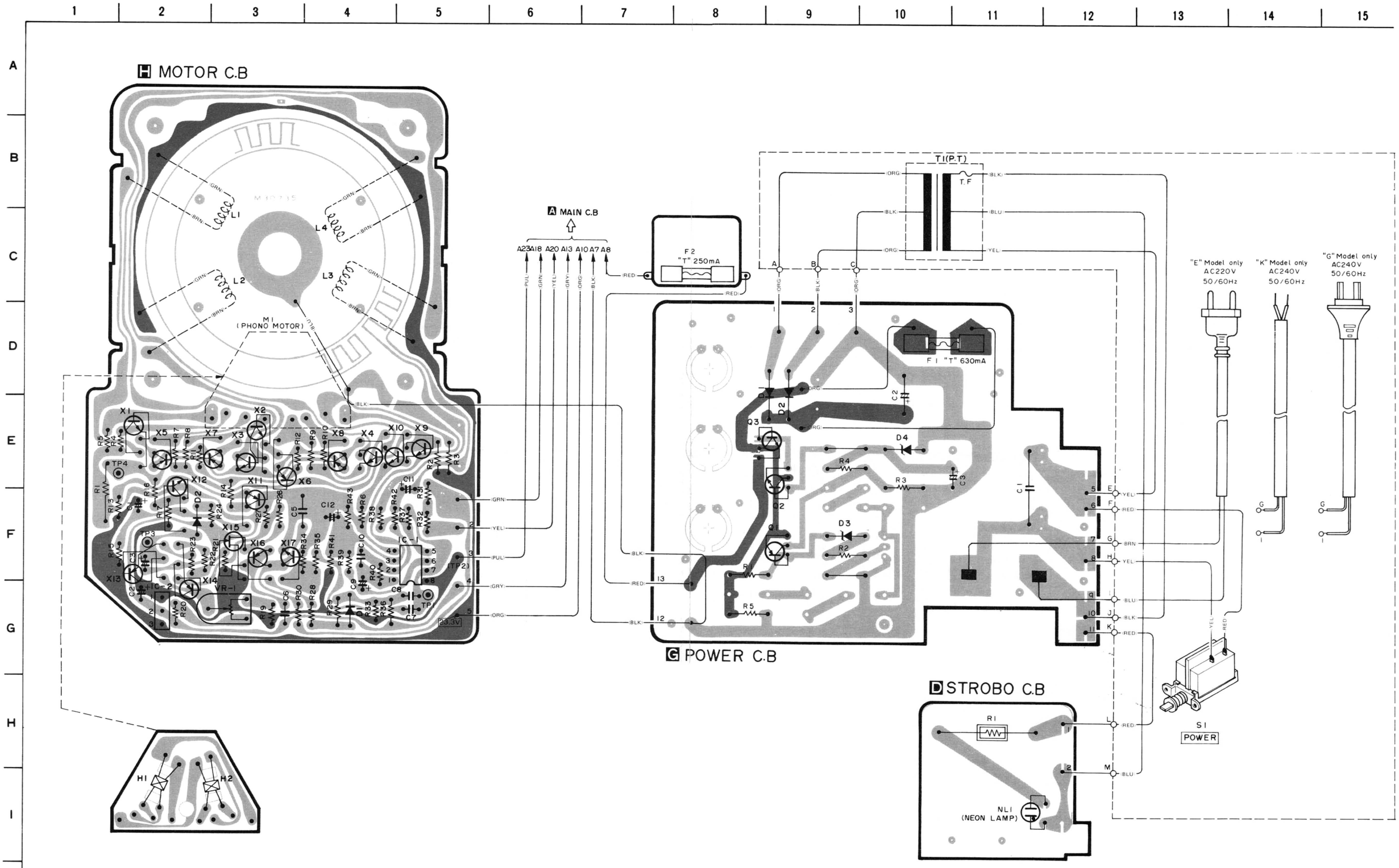

NOTES (1) B(+) Pattern Others pattern