SERVICE MANUAL

MODEL: MPC5000

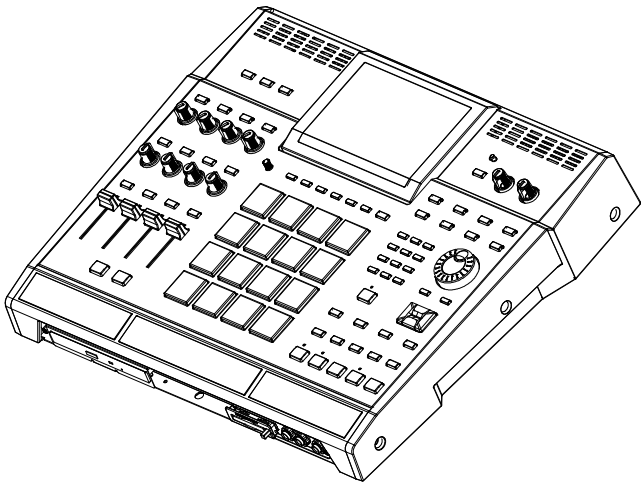

SPECIFICATIONS

General

Display / 240 x 128 dot graphic LCD w/back light
Memory card slot / Compact Flash (The size of the compact flash card
that MPC5000 can handle is from32MB to 2GB)
Dimentions (W x H x D) / 18in x 16 1/16 x 3 3/8 (6 7/8 with screen at max)
Weight / 18.2 lbs
Power reqirement /50W

Sound generator

Sampling rate / 44.1kHz
Memory capacity / 64MB standard ,expandable to 192MB
Recording time / 12m 48sec. (64MB, MONO),38m24sec.(192MB MONO)
Memory expansion slot / 1 x for optional EXM-E3
Data format / 16-bit linear
Polyphony / 64
Dynamic filtering / 1 State Variable Filter per voice (up to 8 pole, depending on type)
Filter type / LOW PASS, BAND PASS, HIGH PASS, BAND BOOST, BAND STOP, ANALOG MODELING, VOCAL FORMANT
Preset sound memory / 16MB
Number of programs / 128

Effects

Effects / 4 stereo busses with 2 stereo effects per buss, and Master effect
Master effect/4 band EQ, Compressor

Sequencer

Maximum events / 100,000 notes
Resolution /960 parts per 1/4-note
Sequences / 99
Tracks per sequence / 64
MIDI output channels / 64 (16 channels x 4 outputs)
Song mode / 20 songs, 250 steps per song
Drum pad / 16 (velocity and pressure sensitive)
Drum pad banks / 4
Sync mode / MIDI clock, MIDI Time Code
Transport Controls/MIDI Machine Control

Inputs/Outputs

Record input (L and R) / MIC/ 1/4-inch Combo x 2 balanced -40dBu, input impedance 11k ohms; RCA with PHONO preamp,
Max. Input level /+10dBu
Digital input / RCA-pin x 1 S/PDIF
Stereo output (L and R) / 1/4-inch phone x 2 balanced +11dBu, output impedance 1k Ohms,
Max. output level/ +22dBu
8 individual outputs / 1/4-inch phone x 4 balanced +11dBu, output impedance 1k Ohms,
Max. output level /+22dBu
Phones output / 1/4-inch stereo phone x 1, 200mW / 100 ohms
Digital output / RCA-pin x 1 S/PDIF
ADAT Optical x 1 (8 Channels)
MIDI inputs / 5-pin DIN x 2
MIDI outputs /5-pin DIN x 4
USB / Slave connector x 1, USB MASS STORAGE CLASS support (Windows 2000/Me/XP or later version, or Mac OS 9.x/10.x or later version.)
Footswitches / 1/4-inch x 2

Standard accessories

Standard accessories / Power cable,Operator's manual

Options

EXM-E3/128MB expansion memory card (Upgrades unit to 192MB total) CDM-25 CDR/DVD Drive

Data Compatibility

MPC1000 / SEQ, WAV, PGM
MPC2000/2000XL / SEQ, WAV, SND, PGM (Most parameters of PGM file can be loaded.)
MPC4000 / SEQ, WAV, PGM (DRUM program only. Only note assign and tune are loaded.)
MPC3000 / SND (THRU Computer)
Z4/Z8 / SEQ, WAV, PGM,(DRUM program only. Only note assign and tune are loade.)
S5000/6000 / WAV only (THRU Computer)
S1000/3000 / No compatibility

DISASSEMBLY PROCEDURES

1. DISASSEMBLE THE FRONT COVER.

(A) REMOVE 4 PCS SCREW FROM FRONT COVER.

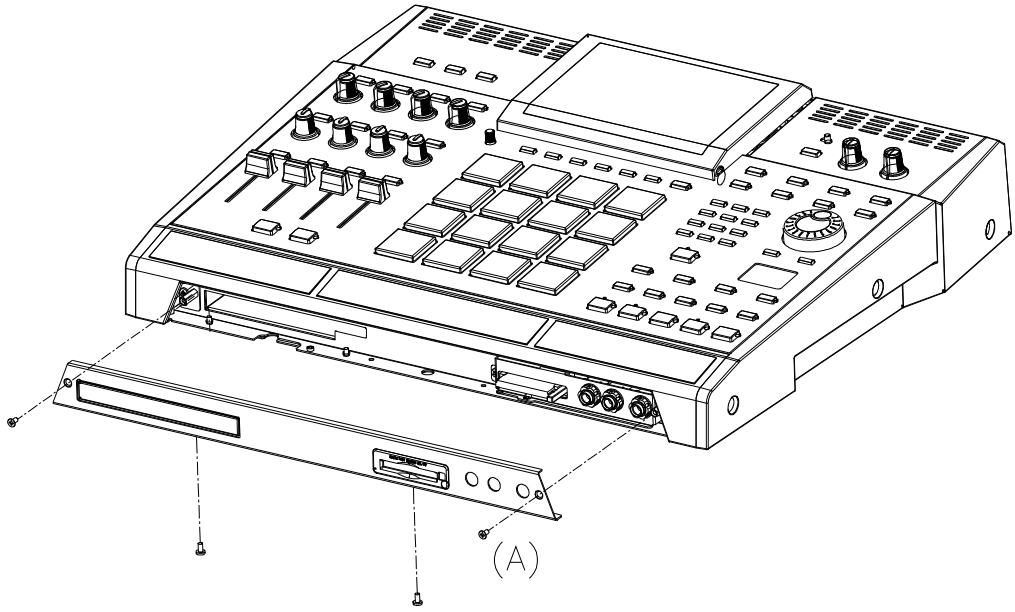

(Fig1)

2. DISASSEMBLE THE BOTTOM COVER.

(A)REMOVE 17 PCS SCREW FROM BOTTOM COVER.

(B)THE BOTTOM COVER CANNOT BE TAKEN AWAY START, FIRST LIFTS ANGLE 30~40, DISASSEMBLY CABLE FROM HP HARD DISK, THEN TAKE THE BOTTOM COVER OFF.

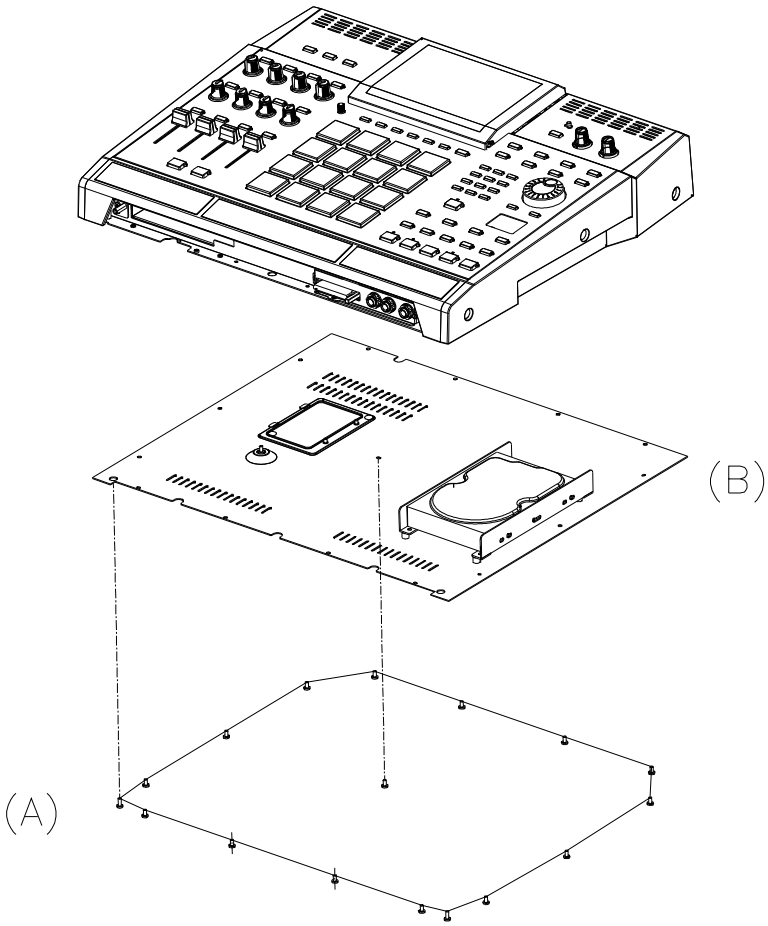

(Fig2)

3. DISASSEMBLE THE SIDE CAP AND PALMREST.

(A) REMOVE 6 PCS SCREW FROM SIDE CAP.
(B) REMOVE 9 PCS SCREW FROM THE PART

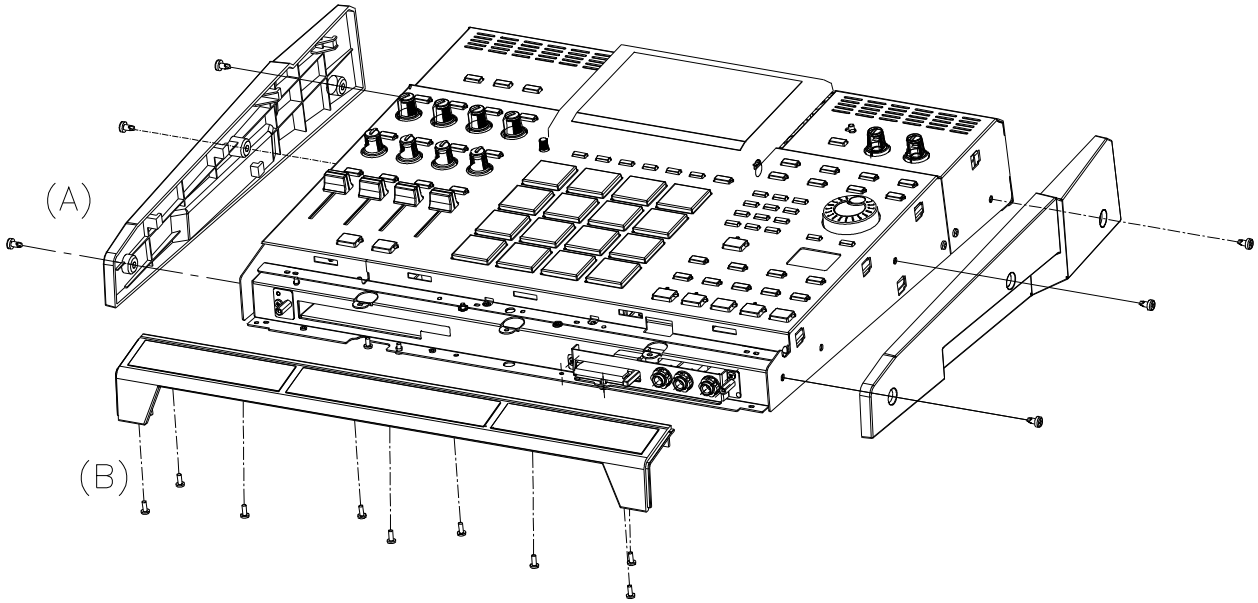

(Fig3)

4. DISASSEMBLE THE TOP PANEL.

(A) REMOVE 4 PCS SIDE CAP AND 4 PCS SPACER SLIDE FROM TOP PANEL.
(B) REMOVE 6 PCS SCREW FROM TOP PANEL.
(C) REMOVE 4 PCS SCREW FROM PANEL SIDE.
(D) REMOVE 4 PCS SCREW FROM PANEL TOP.
(E) LIFT THE LCM MODLE.
(F) WIPES OUT 2 PCS SCREW FROM PANEL LCM MODLE.

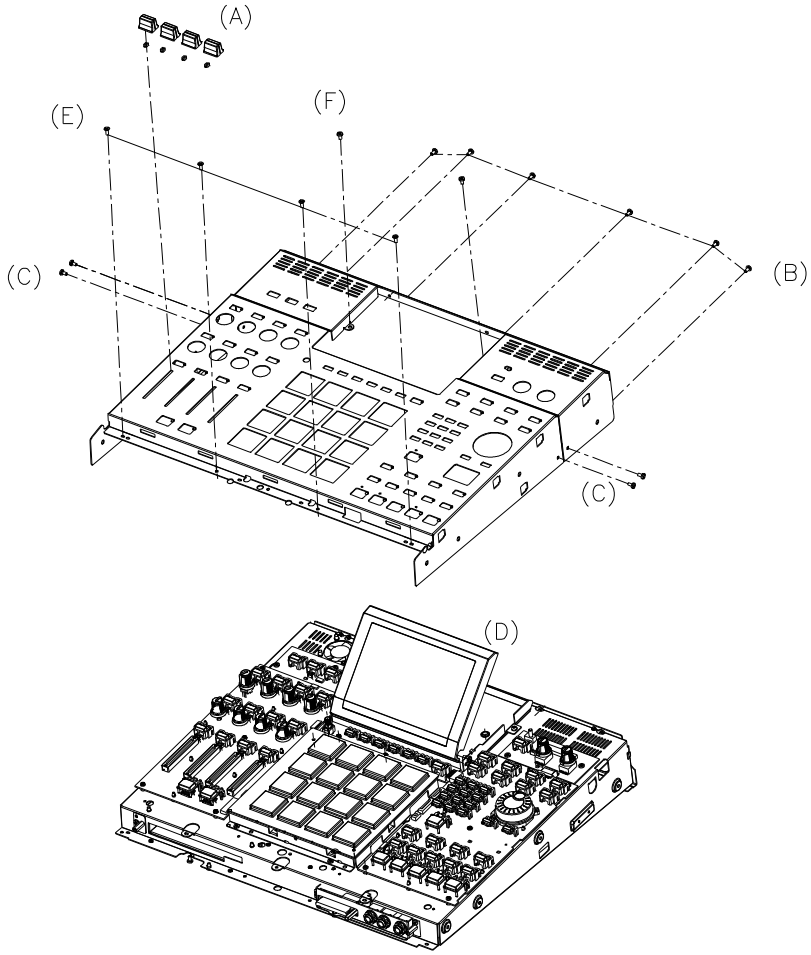

(Fig4)

5. DISASSEMBLE MAIN CONTROL PCB, VOLUME PCB,Q LINK PCB,SYNTH PCB,SELECT PCB ASS'Y.

(A) REMOVE 5 PCS SCREW FROM MAIN CONTROL PCB.
(B) REMOVE 3 PCS SCREW FROM VOLUME PCB.
(C) REMOVE 5 PCS SCREW FROM Q LINK PCB.
(D) REMOVE 3 PCS SCREW FROM SYNTH PCB.
(E) REMOVE 2 PCS SCREW FROM SELECT PCB.

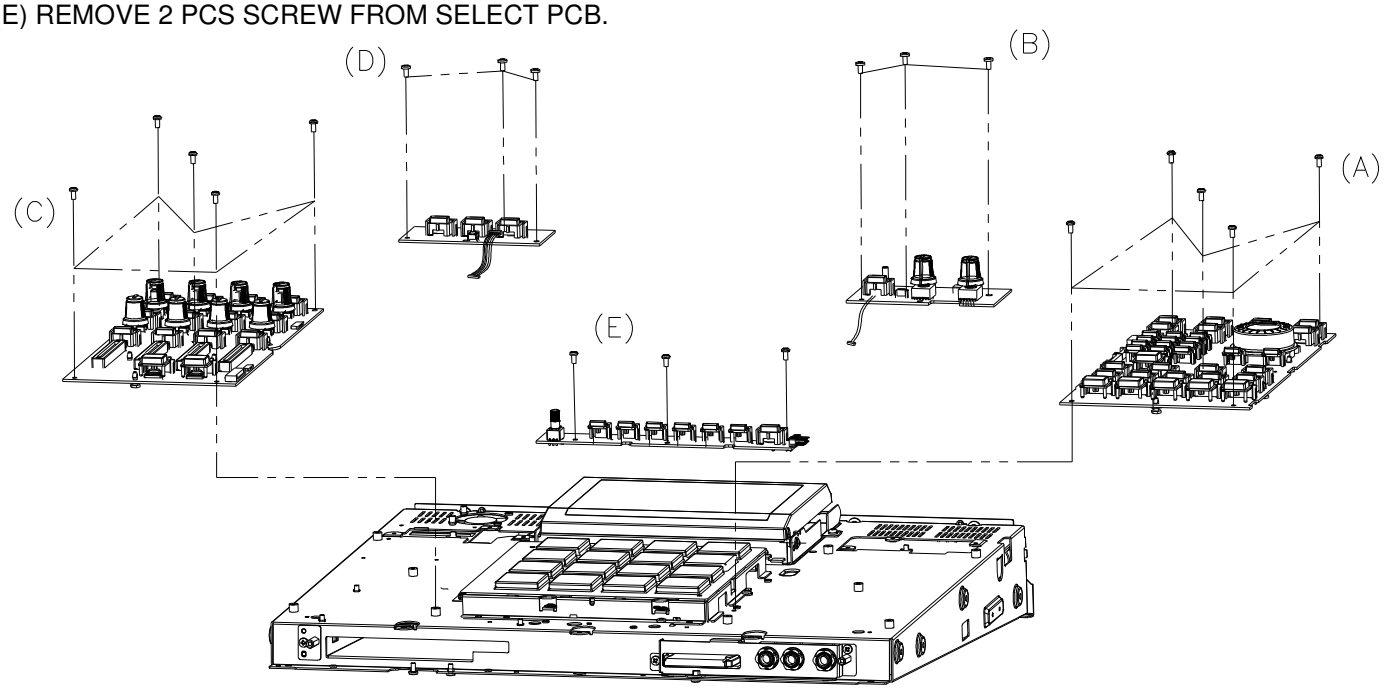

(Fig5)

6. DISASSEMBLE THE PAD ASS'Y.

(A) REMOVE 6 PCS SCREW FROM THE HOLDER PAD.

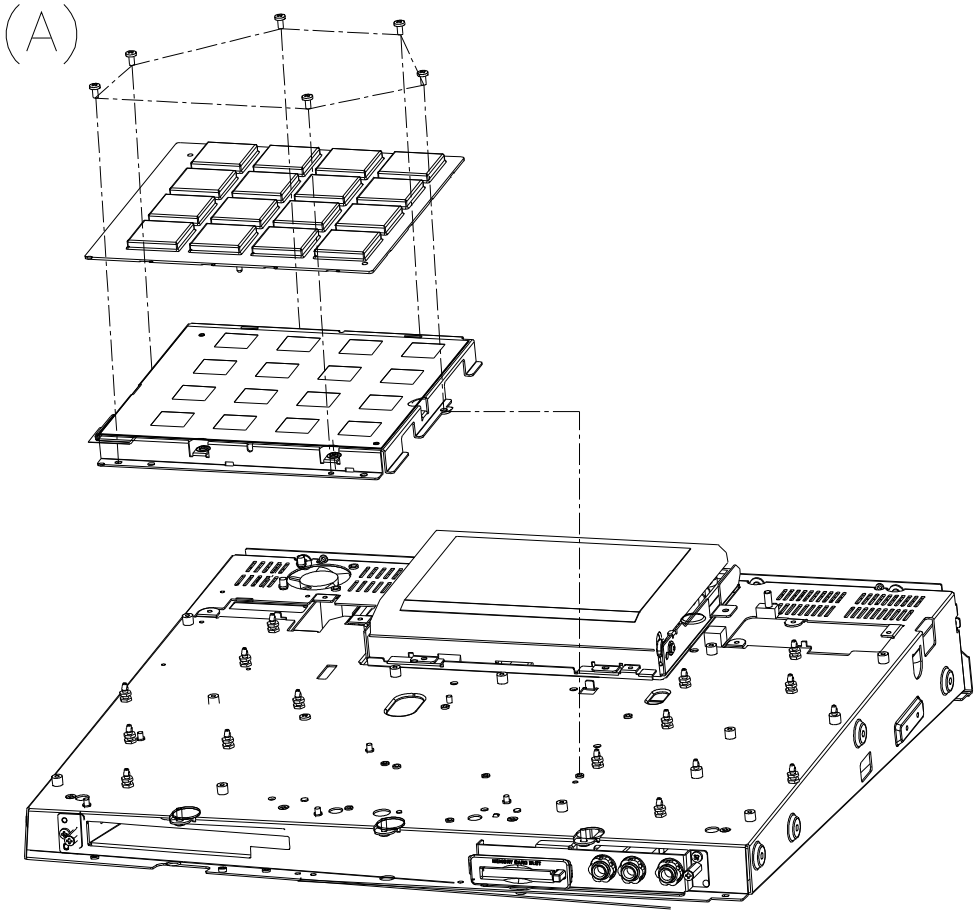

(Fig6)

7. DISASSEMBLE PANEL LCM MODLE.

(A) REMOVE 4 PCS SCREW FROM PANEL LCD BOTTON.

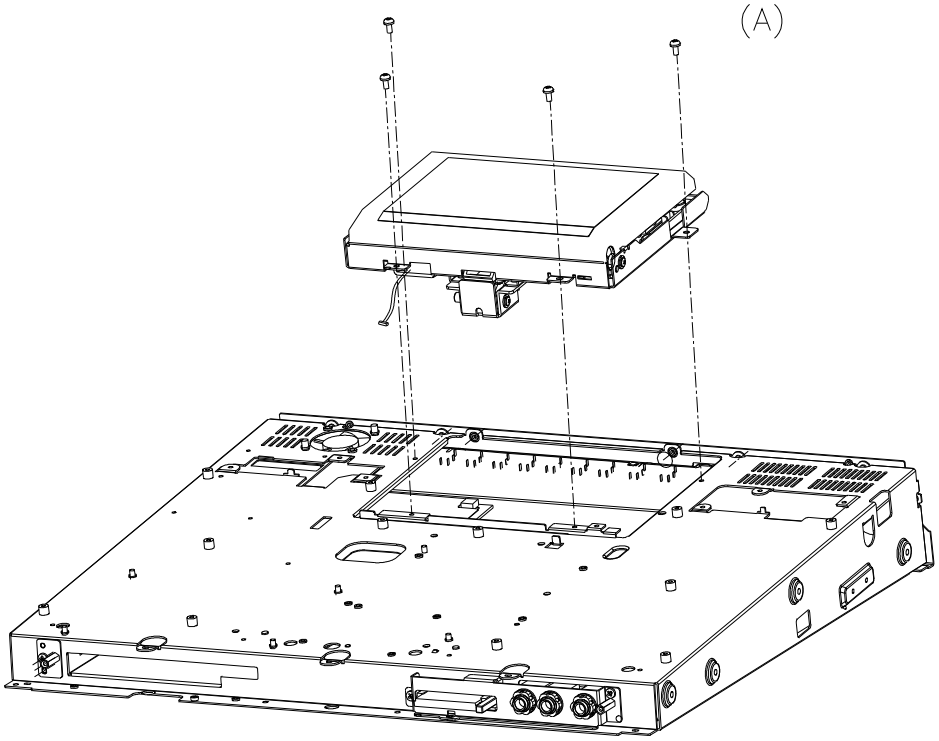

(Fig7)

8. DISASSEMBLE THE MAIN PCB ASS'Y.

(A) REMOVE 3 PCS SCREW FROM THE REAR PANEL.

(B) REMOVE 4 PCS SCREW FROM THE REAR PANEL.

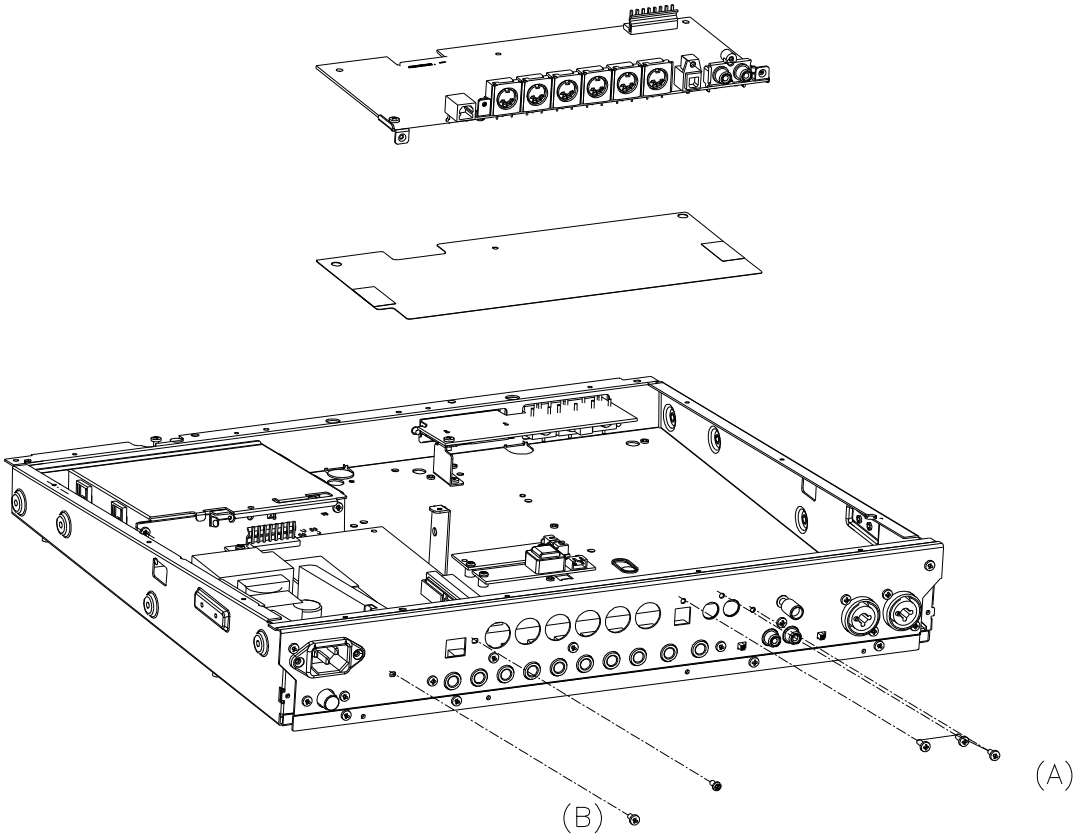

(Fig8)

9. DISASSEMBLE THE ANALOG PCB.

(A) REMOVE 4 PCS SCREW FROM THE REAR PANEL.
(B) REMOVE 4 PCS SCREW FROM THE REAE PANEL
(C) REMOVE 1 PCS SCREW FROM THE REAE PANEL
(D) REMOVE 1 PCS SCREW FROM THE REAE PANEL

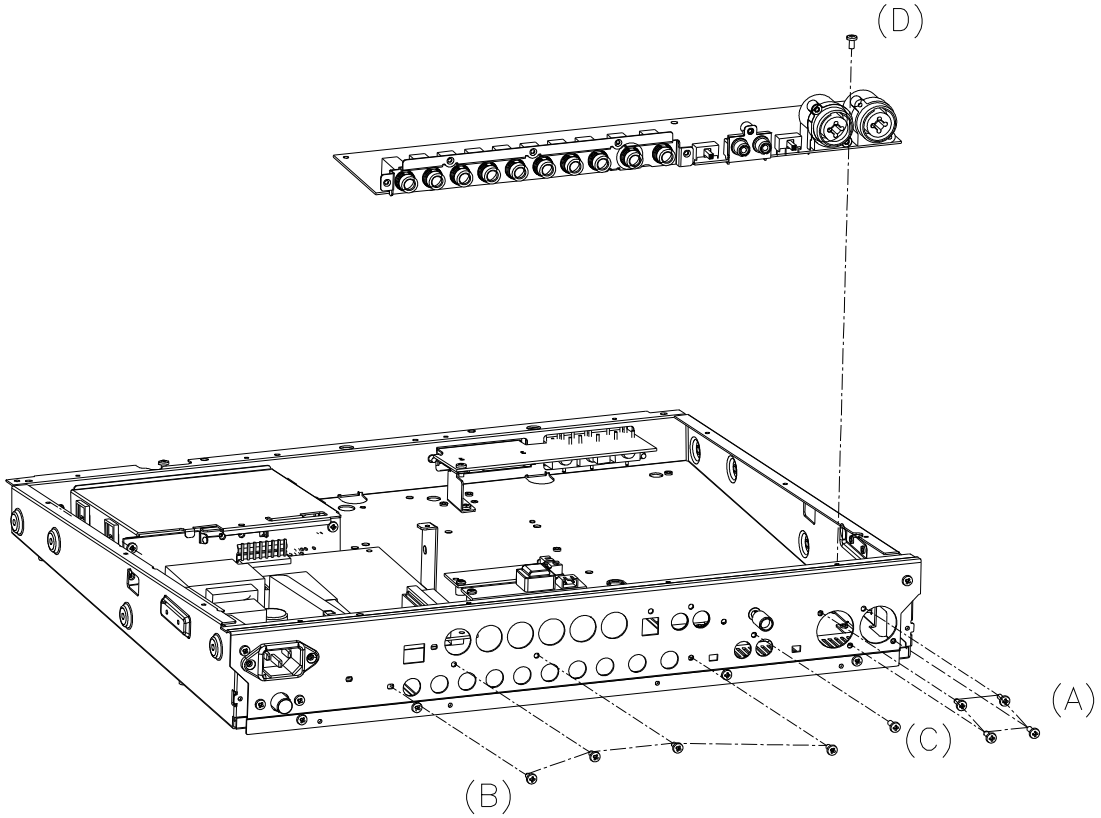

(Fig9)

10. DISASSEMBLE THE CF PCB

(A) REMOVE 3 PCS NUTS FROM HOLDER HP.
(B) REMOVE 1 PCS M SCREW FROM CF PCB.

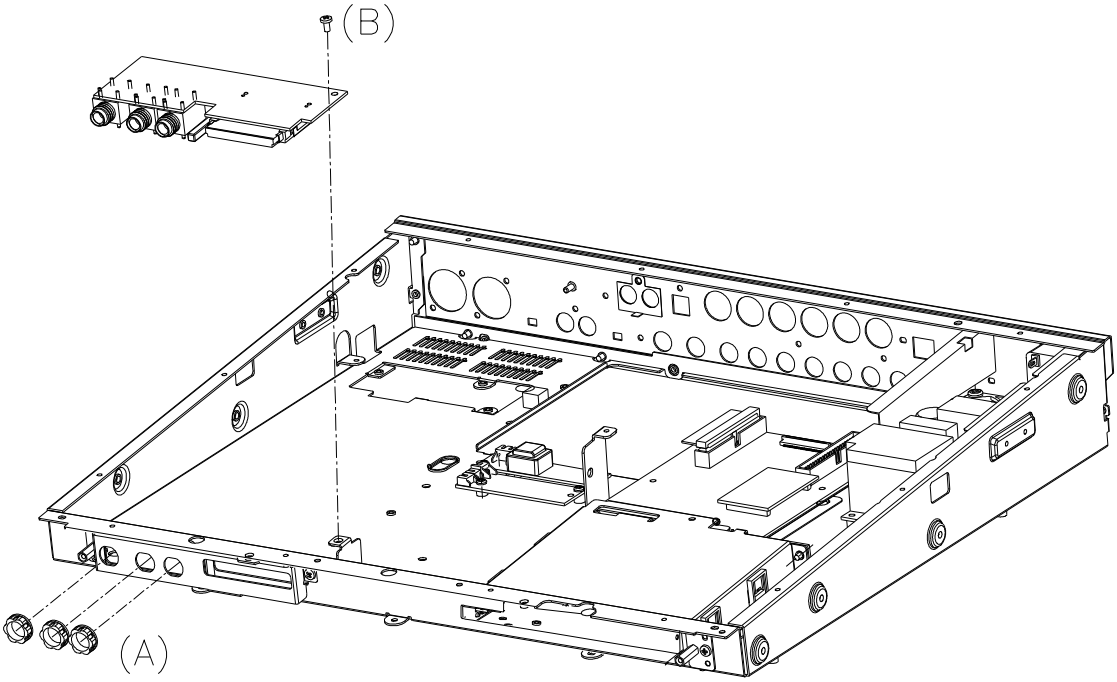

(Fig10)

11. DISASSEMBLE THE DIGITAL EXPANSION PCB, CHASSIS.

(A) REMOVE 1 PCS SCREW AND 1PCS SCREW FROM DIGITAL EXPANSION PCB.
(B) REMOVE 2 PCS SCREW FROM THE CHASSIS.
(C) REMOVE 4 PCS 1PCS SCREW FROM THE CHASSIS.

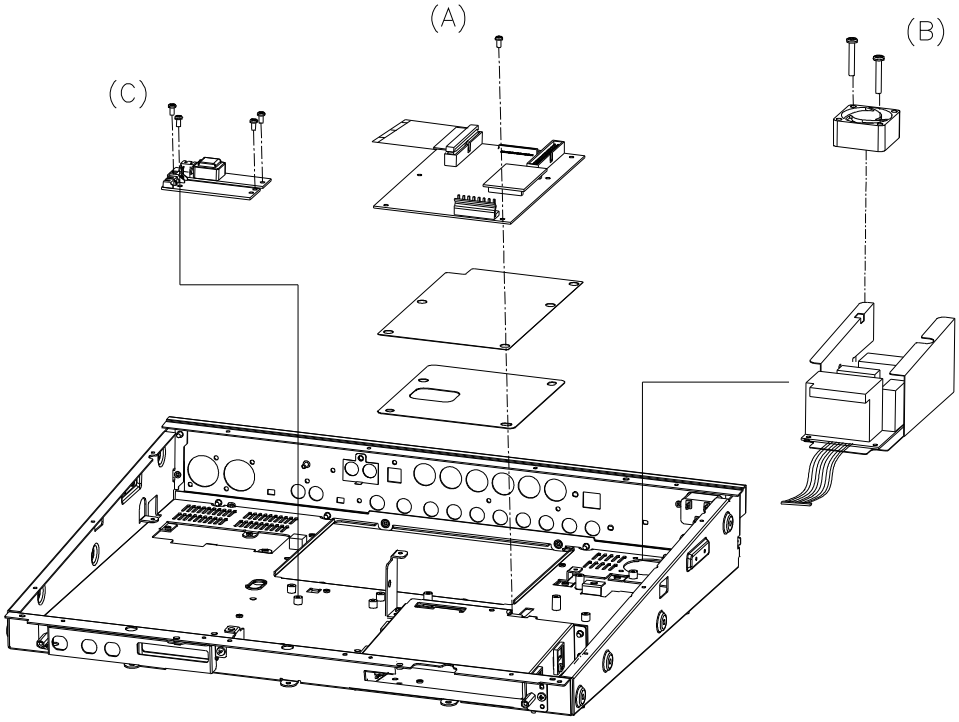

(Fig11)

12. DISASSEMBLE THE DVD PCB.

(A)REMOVE 4 PCS SCREW FROM THE HOLDER CD.
(B)REMOVE 2 PCS SCREW FROM THE DVD PCB.

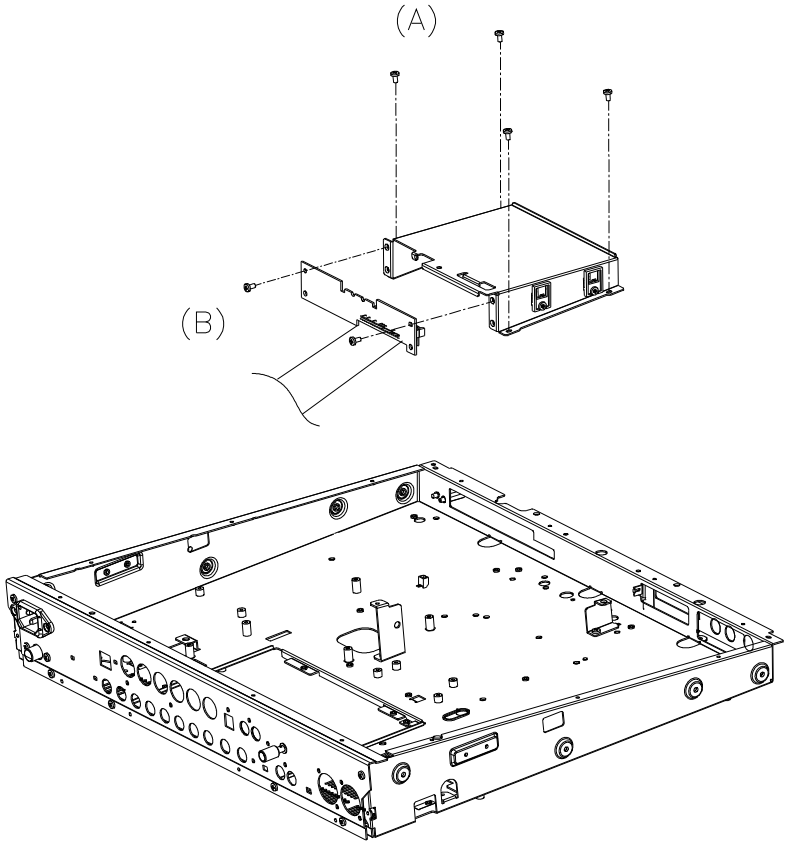

(Fig12)

WIRING DIAGRAM
(US/EU/UK/JIS/AUS NZ)

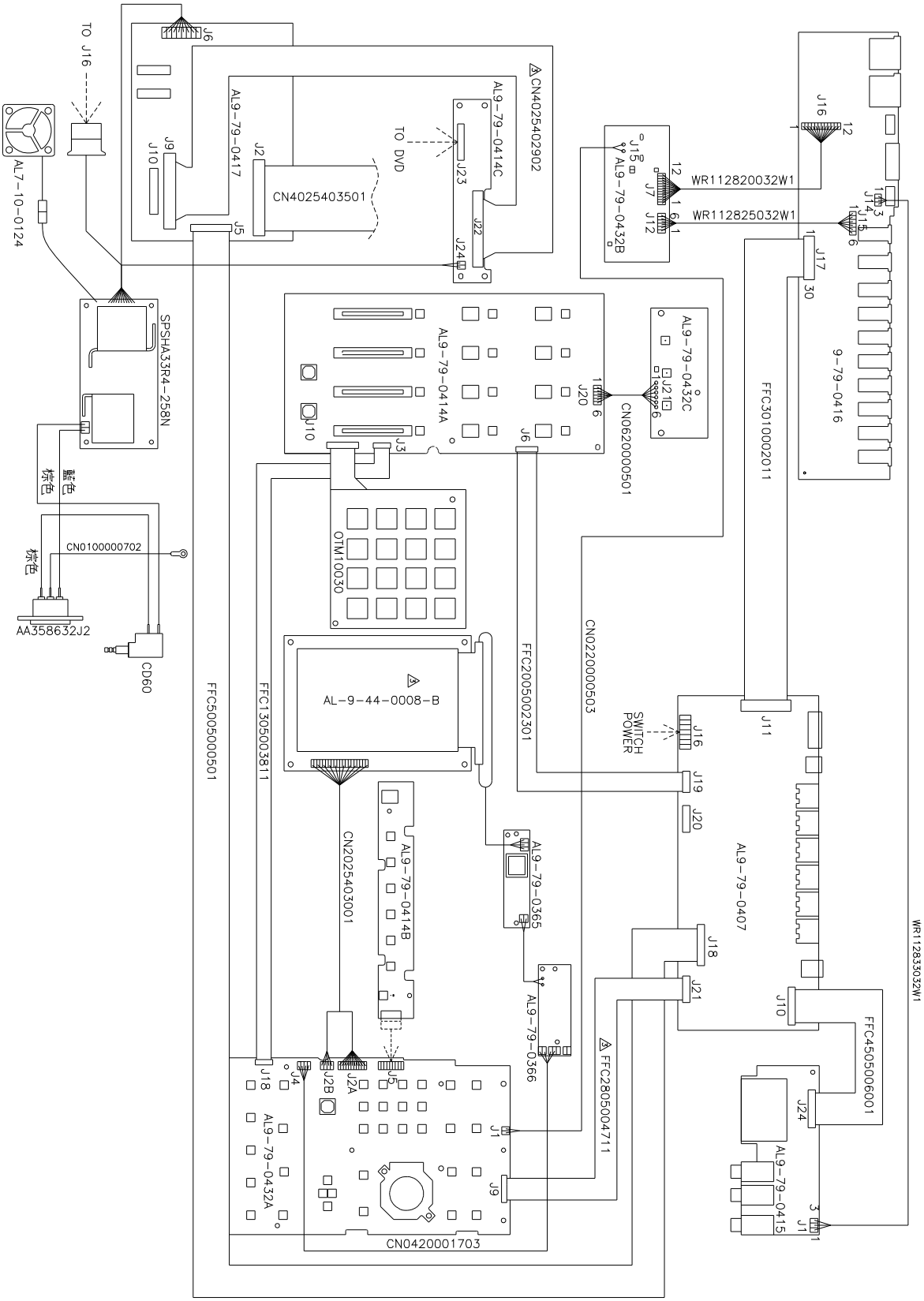

EXPLODE DIAGRAM
(US/EU/UK/JIS/AUS NZ)

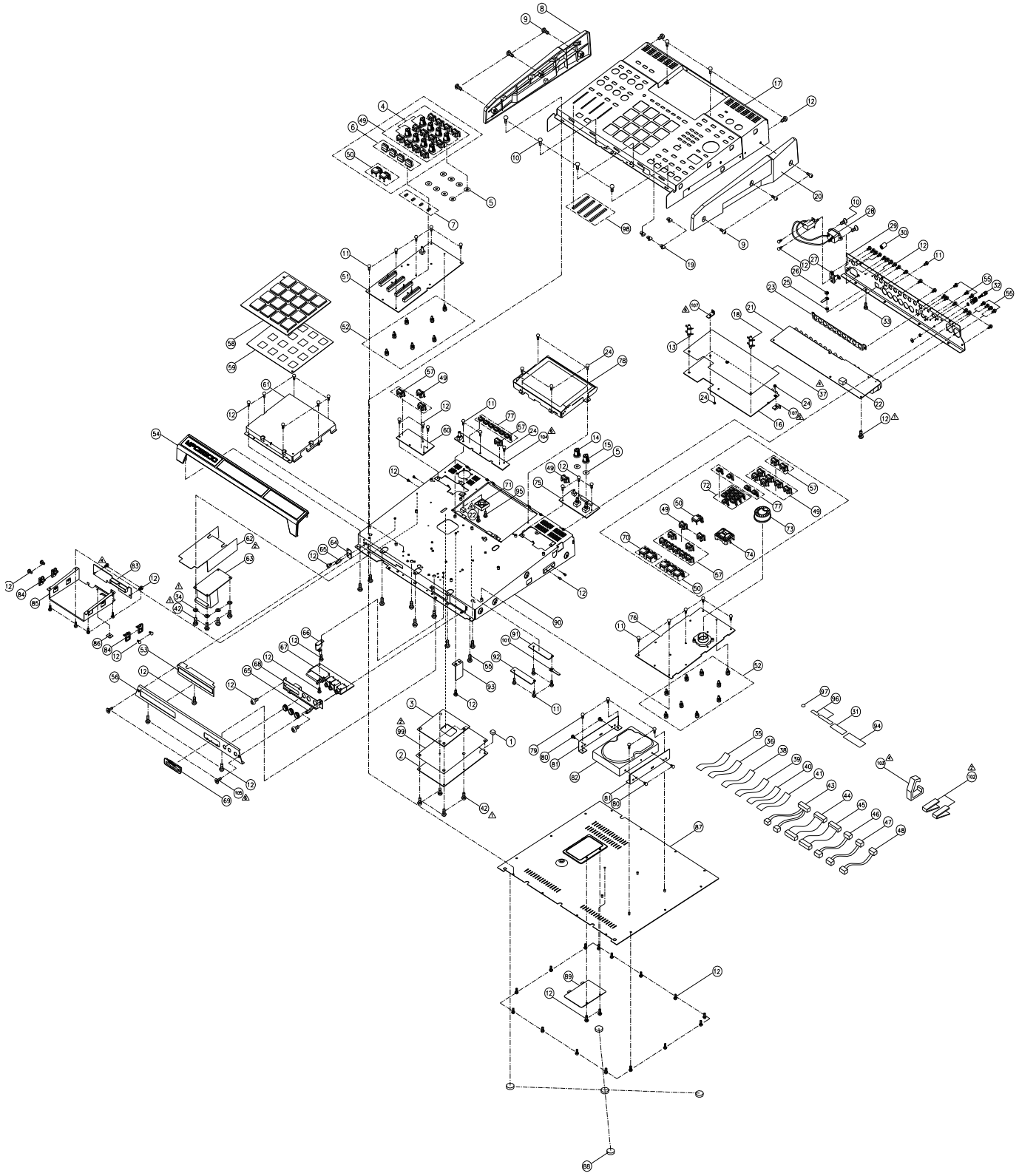

EQUENCIAL NO EXPLODE DIAGRAM WILL BE MARKED ON REF.COLUMM OF BOM LIST

EXPLODE DIAGRAM
(US/EU/UK/JIS/AUS NZ)

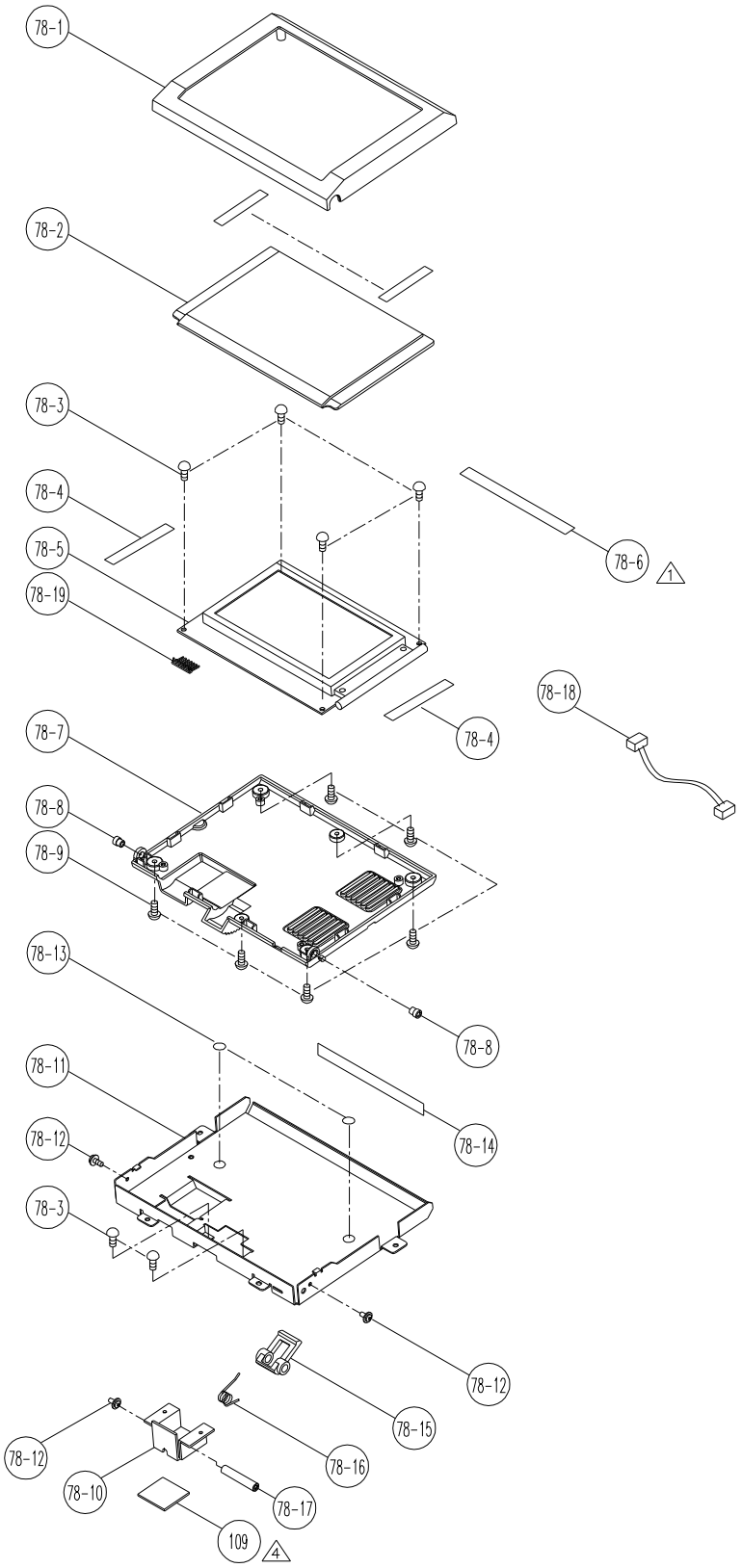

NOTE：PLEASE VOLUNTARILY PASTES ABOVE 78-2 ATTACHES TWO TWO-SIDED RUBBER

EQUENCIAL NO EXPLODE DIAGRAM WILL BE MARKED ON REF.COLUMM OF BOM LIST

PACKING DIAGRAM
(US/EU/UK/JIS/AUS NZ)

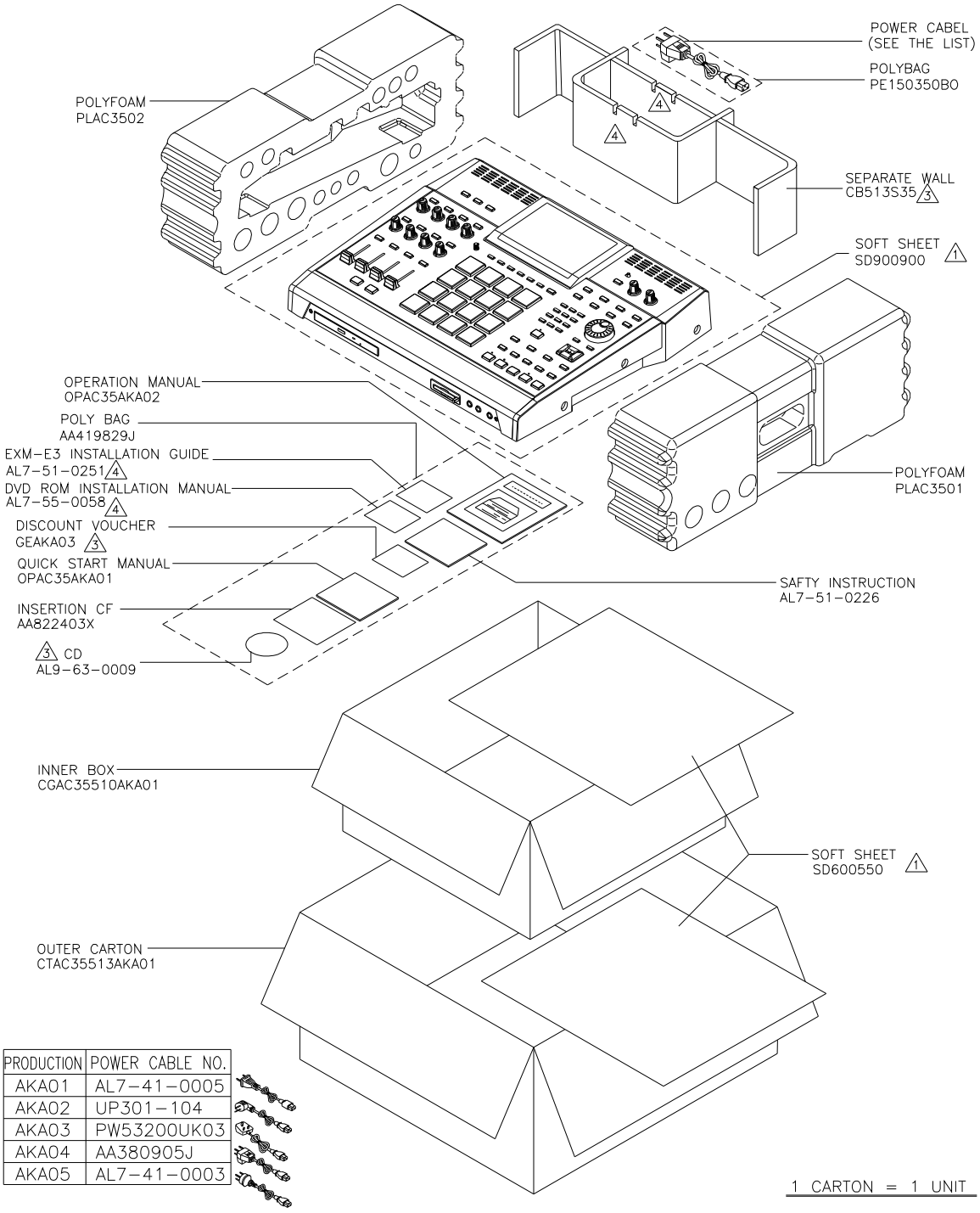

PRODUCTION	POWER CABLE NO.
AKA01	AL7-41-0005
AKA02	UP301-104
AKA03	PW53200UK03
AKA04	AA380905J
AKA05	AL7-41-0003

1 CARTON = 1 UNIT

MPC5000AKA BOM

LEVEL	P/N	DESCRIPTION	QTY	REF
1	AA810353J	LENS LED	4	19
1	AA810525J	BUTTON POWER	1	30
1	AA811571J	LABEL CAUTION	1	94
1	AA812668J	FOOT B	5	88
1	AA821679X	SPACER SLIDE	4	7
1	AA821799X	COVER MEMORY	1	89
1	AA822124X	LABEL FCC-S	1	31
1	AA822272X	HOLDER ADDA	1	23
1	AA822273X	HOLDER HP	1	68
1	AA822275X	HOLDER MIDI	2	107
1	AA822278X	HOLDER FRONT	1	64
1	AA822280X	PROP M.SCREW L=15.1	2	65
1	AA822283X	HOLDER CD	1	85
1	AA822285X	HOLDER PCB	1	66
1	AA822287X	GUIDE CD	4	84
1	AA822298X	BUTTON PUSH M (A) CLEAR	22	49
1	AA822299X	BUTTON PUSH M (B)	12	57
1	AA822308X	KNOB VOL PART (17)	1	14
2	PT1510606	KNOB VOL(8)	1	
2	PT151060701	KNOB (SPRAY PAINT SILVER)(10)	1	
3	PT1510607	KNOB VOL(10)	1	
1	AA822311X	KNOB VOL PART (18)	1	15
2	PT1510606	KNOB VOL(8)	1	
2	PT151060702	KNOB CAP(RED)(11)	1	
1	AA822313X	KNOB VOL PART(19)	8	4
2	PT1510606	KNOB VOL(8)	8	
2	PT151060703	KNOB (SPRAY PAINT BLACK)(12)	8	
1	AA822330X	BUTTON PUSH (B)-7 COOL GRAY 4C	10	77
1	AA822331X	BUTTON PUSH (B)-8 COOL GRAY 9C	10	72
1	AA822333X	BUTTON PUSH B (7) RED 187C	2	70
1	AA822334X	PANEL SLOT (B)	1	69
1	AA822401X	RUBBER DRUM PAD TW-LG	1	58
1	AA822775X	EVA	1	86
1	AL5-00-0149	SCREW NO.6-32 UNC	4	80
1	AL7-10-0124	FAN	1	71
1	AL9-79-0365	DC-AC INVERTER	1	91
1	AL9-79-0366	DIMMERS	1	92
1	BACBS-22A	PCB SUPPORT	1	18
1	BACBS-29A	PCB SUPPORT	1	13
1	BAFAM-25A	FLAT CABLE CLAMP	2	102
1	BAGL-40A	CLIP	1	101
1	BAGL-70L	CLIP	1	
1	BAMCBS-5P	PCB SUPPORT	16	52
1	BAWD800JB	HARD DISCS	1	82
1	BAWEM-01	FLAT CABLE CLAMP	1	103
1	CN0420001703	Flat Cable 4P(2P+2P) Pitch 2.5	1	43
1	CN4025402902	Flat Cable ATA Type 20P*2 Pitc	1	44
1	CN4025403501	Flat Cable ATA Type 20P*2 Pitc	1	45

1	EVA1504406	EVA(30X30MM)	1	
1	FFC1305002001	FFC 13Pin Pitch:0.5mm Length:2	1	35
1	FFC2005002301	FFC 20Pin Pitch:0.5mm Length:2	1	36
1	FFC2805004711	FFC 28Pin Pitch:0.5mm Length:4	1	38
1	FFC3010002011	FFC 30Pin Pitch:1.0mm Length:2	1	39
1	FFC4505006001	FFC 45Pin Pitch:0.5mm Length:6	1	40
1	FFC5005000501	FFC 50Pin Pitch:0.5mm Length:5	1	41
1	K46-1	CABLE TIE	5	
1	LA67YH104	GND INDICATE STICKER	1	97
1	LAC27AKA01	LABEL BARCODE-B(A)	1	96
1	MT1101809	SCREW GROUND ASS'Y	1	32
1	MT1304446	BRACKET HDD	2	81
1	MT150290201	CD COVER(PAINT)	1	53
2	MT1502902	CD COVER	1	
1	MT150290401	COVER FRONT SPRAY PAINT & PRIN	1	56
1	MT1504316	BRACKET	1	93
1	MT1504413	SW HOLDER	1	27
1	MT1504414	PAD HOLDER	1	61
1	MT152040301	REAR PANEL SPRAY PAINT PRINTNG	1	29
2	MT1520403	REAR PANEL	1	
1	MT153000401	PANEL TOP SPRAY PAINT & PRINTI	1	17
1	MT1530201	CHASSIS MAIN	1	90
1	MT1530302	BOTTOM COVER	1	87
1	NM1106120	VELVET CARPET	10	5
1	NM1504402	FELT-45	4	98
1	NP215AKA07	INSULATION	1	
1	NP215AKA08	INSULATION	1	99
1	NP215AKA09	INSULATION	1	37
1	NP215AKA10	INSULATION	1	3
1	NUT01040IIZL	N FRANGE 40STL CMT	1	26
1	OTM10030	PAD SENSOR	1	59
1	PMPC3500AKA01	PAC ASS'Y	1	
2	AA419829J	POLY BAG(O/M A-4)-2	1	
2	AA822403X	INSERTION CF MPC2500	1	
2	AL7-41-0005	CABLE POWER UL/CSA SJT	1	
2	AL7-51-0226	SAFETY MANUAL	1	
2	AL7-51-0251	EXM-E3 INSTALLATION GUIDE	1	
2	AL7-55-0058	DVD ROM INSTALLATION MANUAL	1	
2	CB513S035	SEPARATE WALL	1	
2	CGAC35510AKA01	OUTER BOX	1	
2	CTAC35513AKA01	OUTER BOX	1	
2	EVA1504409	SPONGE 150X3X3	4	
2	GEAKA03	DISCOUNT VOUCHER	1	
2	LAC67YAH261	INDICATED LABEL(GREEN)	1	
2	LAP67YAH255	LABEL	5	
2	OPAC35AKA01	QUICK START MANUAL(EN)	1	
2	OPAC35AKA02	OPERATION MANUAL(EN)	1	
2	PE150350BO	POLYBAG	1	

2	PLAC3501	FOAMED(R)	1	
2	PLAC3502	FOAMED(L)	1	
2	SD600550	SOFT SHEET 600X550	2	
2	SD900900	SOFT SHEET 900X900	1	
1	PT151060101	KNOB PRINTING	1	73
2	PT1510601	JOG KNOB	1	
3	ABS5000	ABS MATERIAL	0.01	
1	PT151060202	SLIDER CAP(BLACK)	4	6
2	PT1510602	SLIDER CAP	4	
1	PT151060301	KNOB PRINTING	1	74
2	PT1510603	KNOB	1	
1	PT1510604	BUTTON PUSH B(6)(COOLGRAY 4C)	6	50
1	PT1520604	PANEL SIDE(L)	1	8
2	PM-PA727	ABS	103	
2	PM3373MB	COLOR RESIN	0.001	
1	PT1520605	SIDE CAP(R)	1	20
2	PM-PA727	ABS	103	
2	PM3373MB	COLOR RESIN	0.001	
1	PT1530107	PALM REST	1	54
2	PM-PA727	ABS	135	
2	PM3373MB	COLOR RESIN	0.001	
1	RU1504401	RUBBER MAT 8X8X4.0	1	1
1	RU1504402	RUBBER MAT 10*10*8.5	2	22
1	SC0306FIBI	SCREW M3*6MM PFB	2	105
1	SC0306PBBI	SCREW M3*6MM PPB TAPPING	79	12
1	SC0306RBNI	SCREW M3*6MM PRN TAPPING	8	24
1	SC0306RIBI	SCREW M3*6MM PRB	18	11
1	SC0306RICI	SCREW M3*6MM PRZ	8	42
1	SC0308FBBI	SCREW M3x8mm PFB Tapping	6	10
1	SC0308PBBI	SCREW M3x8mm PPB Tapping	16	55
1	SC0408BSBIL	ST BID40X08STL BZN	6	9
1	SC0410BIBIL	SCREW M4x8mm PBB	1	33
1	SC0425PIDI	SCREW M4x25mm PPZ	2	95
1	SC3506AIBI	SCREW M3.5x6 mm PFB	4	79
1	SPSHA33R4-058N	SWITCHING POWER	1	63
1	TWAA358632J3	POWER STICK BASE ASS'Y	1	28
2	AA358632J2	AC SOCKET	1	
2	CD60	Switch Power Push Single Row	1	
2	CN0100000902	CONNECTOR-YELLOW GREEN 1P 90mm	1	
2	DWAC11	Dual Isolation Cable BROWN 1P	1	
2	DWLB200801	Dual Isolation Cable BLUE/BROW	1	
2	HST050015BUL	HEAT-SHRINKABLE TUBE 5X15MM	5	
1	TWMT150431301	LCD ASS'Y	1	78
2	AA820655X	PROP 1 F.SCREW L=27	1	78-17
2	AA821800X	SHIELD LCD(1)	1	78-14

2	AA822276X	HOLDER LEVER	1	28764
2	AA822277X	LEVER	1	78-15
2	AA822279X	BUSH PANEL LCD	2	28703
2	AL9-44-0008-B	LCM UMS-8074MC-B	1	28611
2	CN2025403001	Flat Cable 20P(11P+9P) Pitch 2	1	78-18
2	EVA1504403	LCD SPONGE LONG	1	28642
2	EVA1504404	LCD SPONGE SHORT	2	28581
2	MT150431301	HOLDER LCD SPRAY PAINT PRINTNG	1	28795
2	PT150140601	LCD LENS	1	28522
3	PT1501406	LCD LENS	1	
2	PT150440701	LCD TOP COVER SPRAY PAINT	1	28491
3	PT1504407	LCD TOP COVER	1	
4	ABS5000	ABS MATERIAL	0.032	
4	PM3373MB	COLOR RESIN	0	
2	PT150440801	LCD BOTTOM SPRAY PAINT SPRAY P	1	28672
3	PT1504408	LCD BOTTOM COVER	1	
4	ABS5000	ABS MATERIAL	0.067	
4	PM3373MB	COLOR RESIN	0.001	
2	RU1504306	RUBBER MAT	2	78-13
2	SC0306PBBI	SCREW M3*6MM PPB TAPPING	6	28550
2	SC0306WIZIL	PAN30X06STL CMT POLY WAVE	3	28825
2	SC0308PBBI	SCREW M3x8mm PPB Tapping	6	28734
2	SP1504401	TORSION SPRING	1	78-16
2	TE522502001	Pin Header 90°2.54mm Single	1	78-19
2	WS073307IC	WASHER FLAT	2	78-20
1	WR112820032W1	Isolation Cable 12P 200MM PITC	1	46
1	WR112825032W1	Isolation Cable 6P 250MM PITCH	1	47
1	WR112833032W1	Isolation Cable 3P 330MM PITCH	1	48
1	WS408604505B	WASHER EXTERNAL	1	25
1	WS663309IC	SPRING WASHER 3#	4	34
1	**AL9-79-0407**	**MAIN PCB ASS'Y**	**1**	
2	AL0-16-1001	RES 1K 1% SMD 0805	1	R40
2	AL0-16-1202	RES 12.0K 1% SMD 0805	1	R18
2	AL0-16-1273	RES 127K 1% SMD 0805	1	R39
2	AL0-16-1961	RES 1.96K 1% SMD 0805	1	R38
2	AL0-17-0102	RES ARRAY 4X1K	1	R131
2	AL0-17-0103	RES ARRAY 4X10K 1/10W 0603	6	R19,87,129,142,163,165
2	AL0-17-0472	RES ARRAY 4X4.7K 1/10W 0603	7	R12,15,28,54,73,75,112
2	AL0-17-2470	RES ARRAY 4X47 1/16W 0402	73	R5,6,48~53,56,57,59~70,76,78~81,83,84
				R86,88~103,105~111,115~119,128,132~140
				R144~148
2	AL1-08-0476	E.CAP 47UF/25V	4	C15,17,19,20
2	AL1-16-0823	E.CAP 820UF/6.3V	3	C12,13,21
2	AL1-55-0209	CCAP SMD 20pF/50V 5% 0805 NPO	2	C2,3
2	AL1-56-0105	CCAP SMD 1UF/10V 10% 0805 X7R	2	C6,7
2	AL1-56-0151	CCAP SMD 150PF/50V 5% 0805 NPO	1	C14
2	AL1-56-0221	CCAP SMD 220pF/100V 10% 0805 X	13	C22,25,27~31,34,35,40~42,45

2	AL1-62-0104	CCAP SMD 1UF/50V 10% 0603 X7	130	C4,8,9,23,24,26,32,33,36~39,43,44,46
				C47,49,51,53,54,56,57,59,62,64,66,67
				C70~73,75,77,80~98,102,103,105~112
				C114,116~127,129~134,136,138,141~146
				C148,150~189
2	AL1-70-1471	Solid Tantalum Electrolytic Ca	1	C48
2	AL1-70-3221	Solid Tantalum Electrolytic Ca	2	C63,115
2	AL1-71-3102	Solid Tantalum Electrolytic Ca	9	C60,61,65,99~101,104,113,128
2	AL2-50-4149	DIODE SIGNAL 1N4148 100V 200mA	2	D8,9
2	AL2-51-0140	DIODE POWER SCHOTTKY MBRS140LT	4	D1,5~7
2	AL2-51-4003	DIODE POWER 300V 1A SMA	3	D2~4
2	AL2-51-4401	TRANS NPN 2N4401 40V 1A SOT-23	2	Q1,2
2	AL2-56-0749	TRANS MED-POWER PNP FZT749 SOT	1	Q3
2	AL2-61-2517	REG VOLTAGE AP1117 1.5V SOT-22	1	U35
2	AL2-61-3463	IC REG VOLTAGE MC34063A ADJ 10	1	U32
2	AL2-61-5000	IC REG VOLTAGE NCP500SN25T1 2.	1	U10
2	AL2-62-0032	IC 74AHC32 QUAD 2-IN POS OR SO	1	U16
2	AL2-64-5245	IC 74LVC16245A 16-BIT BUS TRAN	7	U19,20,27,30,37~39
2	AL2-65-2017	IC 74LVC2G17 DUAL GATE SCHMITT	6	U1~3,7,26,28
2	AL2-65-2305	IC MPC962305 ZERO DELAY BUFFER	2	U18,33
2	AL2-69-1208	IC FLASH-ROM NAND-TYPE 64M x 8	1	U29
2	AL2-69-2416	IC EEPROM SERIAL 16K SOIC-8	1	U13
2	AL2-70-5249	IC MPU MCF5249 160-PIN BGA	1	U14
2	AL2-70-6713	IC MPU DSP TMS320C6713B 272-PI	1	U21
2	AL2-74-0181	IC OPTO-ISOLATOR TLP181 TRANS-	2	U4,5
2	AL2-78-0041	IC TIMER RTC SERIAL I2C M41T00	1	U9
2	AL2-79-1582	IC CONTROLLER USB 2.0 HI-SPEED	1	U6
2	AL2-79-3305	IC CONTROLLER RESET W/OVERRIDE	1	U15
2	AL2-80-0010	IC FPGA EP1C4F324C8 324-PIN BG	1	U24
2	AL2-84-8416	IC RECEIVER DIG AUDIO 192kHz C	1	U12
2	AL2-84-8421	IC SAMPLE RATE CONVERTER ASYNC	1	U11
2	AL4-00-0002	JACK DIN 5-PIN MIDI PCB MOUNT	6	J3~8
2	AL4-01-0013	JACK RCA DUAL 2-PIN FEMALE PCB	1	J1
2	AL4-08-0402	CON USB 4-PIN FEMALE PC-MNT HO	1	J9
2	AL4-11-0009	CON DIG OPTICAL TRANSMITTER	1	J2
2	AL4-15-0803	HEADER SIL 8-PIN 3.96mm MALE L	1	J16
2	AL4-20-0001	HEADER DIL 10-PIN 1mm FEMALE S	1	J17
2	AL4-20-0002	HEADER DIL 14-PIN 1mm FEMALE S	1	J12
2	AL4-20-0004	HEADER DIL 26-PIN 1mm FEMALE S	1	J13
2	AL4-20-4000	HEADER DIL 40-PIN .050 MALE SM	2	J14,15
C	AL4-21-2000	CON SIL 20-PIN FFC/FPC 0.5mm 9	1	J19
2	AL4-21-2800	CON SIL 28-PIN FFC/FPC 0.5mm 9	1	J21
2	AL4-21-3001	CON SIL 30-PIN FFC/FPC 1mm 90	1	J11
2	AL4-21-4500	CON SIL 45-PIN FFC/FPC 0.5mm 9	1	J10
2	AL4-21-5000	CON SIL 50-PIN FFC/FPC 0.5mm 9	1	J18
2	AL7-01-0043	OSCILLATOR 33.8688 MHz 3.3V SM	1	U17
2	AL7-01-0045	CRYSTAL 32.768 KHz PARALLEL 12	1	X2
2	AL7-01-0046	CRYSTAL 12 MHz PARALLEL 18pF S	1	X1
2	AL7-01-0049	OSCILLATOR 25 MHz 3.3V SMD	1	U8
2	AL7-05-0003	BATTERY 3V LITHIUM COIN-TYPE P	1	B1
2	AL7-20-0067	INDUCTOR 33uH 1.8A SMD	1	L2
2	AL7-20-0070	INDUCTOR FERRITE BEAD 120 OHMS	1	L1
2	AL7-33-0103	IC FILTER EMI SMD CHIP 2A 50V	1	E1

2	AL7-40-8865	TRANSFORMER 1-10 mHz PULSE 1:1	1	T1
2	AL9-40-0407	PCB MAIN AC35	1	-
2	AL9-61-0173	PROGRAMMED IC(2-69-3920)	1	U31
3	AL2-69-3920	IC FLASH-ROM 128Kx16 70nS TSOP	1	
2	CS102J5003NPO	CCAP SMD 1000PF/50V 5% 0603 NP	2	C10,11
2	CS102J5003X7R	CCAP SMD 1000pF/50V 10% 0603 X	10	C74,76,78,79,135,137,139,140,147,149
2	CS103K5003X7R	CCAP SMD 0.01UF/50V 10% 0603 X	6	C50,52,55,58,68,69
2	CS223K5005X7R	CCAP SMD 0.022UF/50V 10% 0603	1	C5
2	ICAIC1117-18PY	REG IC AIC1117-18PY SOT-223	1	U36
2	ICK4S641632E	IC SDRAM K4S641632K-UC75 TSSOP	3	U22,23,25
2	M0104420	FRAME	1	-
2	MT1301807	GROUND PLATE	1	(J1)
2	RS00018J05	RES 0Ω 5% SMD 0805	14	R9,11,27,149,153~160,162,166
2	RS01018J05	RES 1Ω 5% SMD 0805	5	R122~126
2	RS10218J05	RES 1K 5% SMD 0805	9	R30,33,35,36,121,,130,150,152,164
2	RS10318J05	RES 10K 5% SMD 0805	21	R2,7,8,14,20,22,23,25,26,29,32,43,45~47
				R55,71,72,85,104,113
2	RS12118J05	RES 120Ω 5% SMD 0805	2	R120,151
2	RS15218J05	RES 1.5K 5% SMD 0805	1	R24
2	RS22118J05	RES 220Ω5% SMD 0805	2	R10,16
2	RS30218J05	RES 3K 5% SMD 0805	1	R37
2	RS39118J05	RES 390Ω 5% SMD 0805	2	R3,4
2	RS47018J05	RES 47Ω 5% SMD 0805	6	R44,58,74,77,114,143
2	RS47118J05	RES 470Ω 5% SMD 0805	3	R13,21,82
2	RS47318J05	RES 47K 5% SMD 0805	4	R17,41,42,161
2	RS75018J05	RES 75 5% SMD 0805	1	R1
2	SC0306RICI	SCREW M3*6MM PRZ	1	-
1	**AL9-79-0414A**	QLINK PCB ASS'Y	**1**	
2	AA415015J	Switch Tact Stem Height:4.3mm,	2	S49,50
2	AA822377X	POT ROTARY B10K*2 RD14K12D L=2	8	R4,12,13,15,18,20~22
2	AA822423X	POT ROTARY B10K*2 RF45112P6 L	4	R26~28,40
2	AL0-17-0103	RES ARRAY 4X10K 1/10W 0603	1	R45
2	AL0-17-0472	RES ARRAY 4X4.7K 1/10W 0603	4	R47,49,50,52
2	AL1-08-0222	E.CAP 22UF/16V(MINI)	2	C54,77
2	AL1-56-0103	CCAP SMD 0.01UF/50V 10% 0805 X	16	C56~71
2	AL1-56-0104	CCAP SMD 1UF/50V 10% 0805 X7	41	C3,12,16,19,20,22,24~27,29~33,36,38,40
				C42~53,55,72~76,78~82
2	AL1-56-0222	CCAP SMD 2200pF/50V 5% 0805 NP	1	C9
2	AL2-51-4401	TRANS NPN 2N4401 40V 1A SOT-23	6	Q13,14,23,26~28
2	AL2-51-4403	TRANS PNP 2N4403 40V 800mA SOT	2	Q10,12
2	AL2-54-0138	TRANS SMALL-SIGNAL N-CHAN EN-M	1	Q11
2	AL2-61-7808	IC REG VOLTAGE NJM78L08 8V 100	1	U13
2	AL2-72-0339	IC LM339 ANALOG COMP SOP-14	3	U7,12,16
2	AL2-73-4052	IC CD4052 DIFFERENTIAL 4-CHAN	4	U4,11,14,15
2	AL3-02-0080	LED AMBER L-169XSYDK	12	D48~59
2	AL4-21-1300	CON SIL 13-PIN FFC/FPC 0.5mm 9	1	(J3)
2	AL4-21-2000	CON SIL 20-PIN FFC/FPC 0.5mm 9	1	(J6)
2	BALE48201-5A	LED FIXED 1.5MM	12	(D48~59)
2	FCN1S1002001	CON SIL 20-PIN FFC/FPC 1.0mm 1	1	(J10)
2	RS00018J05	RES 0Ω 5% SMD 0805	1	R51
2	RS10118J05	RES 100Ω 5% SMD 0805	1	R42
2	RS10318J05	RES 10K 5% SMD 0805	1	R41

2	RS24218J05	RES 2.4K 5% SMD 0805	1	R8
2	SWSKRGAED010	Switch Tact 5mm 160gf Horizontal DIP	12	S52~63
2	TE10200602	Pin Header 90° Pitch:2.00mm S	1	(J20)
1	**AL9-79-0414B**	**SELECT PCB ASS'Y**	**1**	
2	AA822378X	LED L-169XQWC-C WHITE	1	D63
2	AL0-09-1090	POT 10KB SINGLE 9mm SERRATED 2	1	R33
2	BALE48201-5A	LED FIXED 1.5MM	1	(D63)
2	RS00018J05	RES 0Ω 5% SMD 0805	1	R74
2	RS20318J05	RES 20K SMD 0805	1	R73
2	SWSKRGAED010	Switch Tact 5mm 160gf Horizontal DIP	7	S51,64,67~71
2	TE552541201	Pin Header 90° Pitch:2.54mm D	1	J8
1	**AL9-79-0414C**	**DVD PCB ASS'Y**	**1**	
2	AA822781X	Female Header 180° Pitch:0.8	1	J23
2	AL1-56-0104	CCAP SMD 1UF/50V 10% 0805 X7	2	C101,102
2	AL4-14-4001	HEADER DIL 40-PIN 1 MALE SHR	1	J22
2	TE622000201	Pin Header 90° Pitch:2.00mm S	1	J24
1	**AL9-79-0415**	**FRONT PANEL PCB ASS'Y**	**1**	
2	AA822374X	SOCKET CFHP-A9-0034 50P	1	J10
2	AA822406X	CF CARD ENJECTOR L=22mm	1	(J10)
2	AL0-17-0103	RES ARRAY 4X10K 1/10W 0603	2	R3,6
2	AL1-56-0104	CCAP SMD 1UF/50V 10% 0805 X7	4	C35,36,39,40
2	AL4-02-0006	JACK 1/4 MONO 5-PIN FEM MINI W	2	J6,7
2	AL4-02-0007	JACK 1/4 STEREO 7-PIN FEM MINI	1	J14
2	AL4-21-4500	CON SIL 45-PIN FFC/FPC 0.5mm 9	1	(J24)
2	AL9-40-0415	PCB FRONT PANEL AC35	1	-
2	CS102K5005X7R	CCAP SMD 1000PF/50V 10% 0805 X	2	C41,42
2	NUT0102IID	NUT HEX M2	2	(J10)
2	RS10218J05	RES 1K 5% SMD 0805	2	R130,132
2	RS10418J05	RES 100K 5% SMD 0805	4	R4,5,7,8
2	SC0206RINI	SCREW M2*6MM PPN	2	(J10)
2	TE622000302	Pin Header 90° Pitch:2.00mm S	1	(J1)
1	**AL9-79-0416**	**ANALOG PCB ASS'Y**	**1**	
2	AA822757X	TRANS 2SC3326 SMD SC-59	12	Q13~24
2	AL0-16-1002	RES 10K 1% SMD 0805	15	R71,84,87,100,105,114~116,124,125,136
				R167,173,176,177
2	AL0-16-1401	RES 1.4K 1% SMD 0805	23	R9~18,23,28,68~70,73,74,85,86,88,89
				R175,178
2	AL0-16-1651	RES 1.65K 1% SMD 0805	22	R21,22,43,44,57,58,91,92,95,96,101~104
				R145~148,151~154
2	AL0-16-1780	RES 178Ω 1% SMD 0805	2	R98,99
2	AL0-16-4021	RES 4.02K 1% SMD 0805	2	R137,168
2	AL0-16-4751	RES 4.75K 1% SMD 0805	26	R25,26,39,40,42,45,76,79,80,83,90,93,94
				R97,117,122,123,126,144,149,150,155,156
				R159,160,163
2	AL0-16-6340	RES 634Ω 1% SMD 0805	6	R5,8,138,141,165,169
2	AL0-16-6813	RES 681K 1% SMD 0805	2	R19,20
2	AL0-16-7321	RES 7.32K 1% SMD 0805	9	R63,72,107,108,118~121,166
2	AL0-16-9099	RES 90.9Ω 1% SMD 0805	2	R142,170
2	AL1-07-0102	E.CAP 1000UF/6.3V	2	C85,86

2	AL1-12-0472	E.CAP 47UF/63V	4	C37~40
2	AL1-55-0221	CCAP SMD 220PF/100V 5% 0805 NP	20	C52~55,59~62,66,67,75,76,89~92,98~101
2	AL1-55-0272	CCAP SMD 2700PF/50V 5% 0805 NP	2	C65,73
2	AL1-55-0472	CCAP SMD 4700PF/50V 10% 0805 X	2	C4,7
2	AL1-56-0102	CCAP SMD 1000PF/100V 5% 0805 N	30	C13~22,27~36,44~47,82,83,104~107
2	AL1-62-0104	CCAP SMD 1UF/50V 10% 0603 X7	36	C23,24,43,51,56,57,69~72,74,79~81,87,95
				C96,102,108~111,113,114,116,120~122,128
				C129~13
2	AL1-62-0105	CCAP SMD 1UF/10V 10% 0603 X5R	9	C58,64,78,84,88,97,112,115,125
2	AL2-51-4401	TRANS NPN 2N4401 40V 1A SOT-23	22	Q1~12,25,27,28,30~34,36,39
2	AL2-51-4403	TRANS PNP 2N4403 40V 800mA SOT	5	Q26,29,35,37,38
2	AL2-61-5000	IC REG VOLTAGE NCP500SN25T1 2.	1	U10
2	AL2-61-7807	REG VOLTAGE LM340MP-5.0 +5V SO	1	U11
2	AL2-62-0014	IC 74AHC14 HEX SCHMITT-TRIGGER	2	U3,13
2	AL2-71-0072	'IC TL072 DUAL OPAMP SOP-8	1	U7
2	AL2-71-0074	IC TL074 QUAD OPAMP SOP-14	1	U1
2	AL2-71-1510	IC OP-AMP SINGLE THAT1510 SOP-	2	U5,6
2	AL2-71-3079	IC MC33079 QUAD OP-AMP SOP-14	5	U2,4,8,9,15
2	AL2-75-4271	IC CODEC CS4271 STEREO 24-BIT	1	U12
2	AL2-75-4382	IC CONVERTER D/A 8-CHANNEL CS4	1	U14
2	AL4-05-0028	JACK XLR 3-PIN FEM STEREO-COMB	2	(J1,2)
2	AL4-15-3000	CON SIL 30-PIN FFC/FPC 1mm 90	1	(J17)
2	AL6-01-0012	SWITCH SLIDE DPDT 2MM	2	S1,2
2	AL9-40-0416	ANALOG PCB	1	-
2	CS101J5005NPO	CCAP SMD 100PF/50V 5% 0805 NPO	6	C1,2,48,49,93,118
2	CS152J5005NPO	CCAP SMD 1500PF/50V 5% 0805 NP	2	C5,6
2	CS471J5005NPO	CCAP SMD 470PF/50V 5% 0805 NPO	6	C9~12,94,119
2	DIZDMMBZ15ALSM	Zener Diode MMBZ15VALT1G 15V S	4	D1~4
2	EC47616TS	E.CAP 47UF/16V (MINI)	16	C3,8,25,26,41,42,50,63,68,77,103,117,123
				C124,126,127
2	JK-6314-01-340	1/4 PHONE JACK JY-6314-0F-340	10	J4~13
2	MT1301807	GROUND PLATE	1	(J3)
2	MT1501802	LUG SOLDER-XLR	1	(J2)
2	MT1501803	GROUND PLATE-JACK	2	(J5,12)
2	RJ103100-130A	JACK RCA DUAL 2-PIN FEMALE RED	1	J3
2	RS027418F05	RES 274Ω 1% SMD 0805	2	R171,172
2	RS04M308J05	RES 4.3M 5% SMD 0805	1	R106
2	RS10118J05	RES 100Ω 5% SMD 0805	6	R1,4,64~67
2	RS140218F05	RES 14.0K 1% SMD 0805	16	R77,78,81,82,109~112,132~135,157,158,161,162
2	RS22118J05	RES 220Ω5% SMD 0805	23	R29~38,47~56,75,113,174
2	RS47018J05	RES 47Ω 5% SMD 0805	7	R127~131,143,164
2	RS47318J05	RES 47K 5% SMD 0805	6	R2,3,59~62
2	RS562218F05	RES 56.2K 1% SMD 0805	2	R6,7
2	RS62018J05	RES 62Ω 5% SMD 0805	4	R24,27,41,46
2	TE10200601	CONNECTPin Header 180° Pitch:	1	(J15)
2	TE612000301	Pin Header 180° Pitch:2.00mm	1	(J14)
2	TE612001201	Pin Header 180° Pitch:2.00mm	1	(J16)
1	**AL9-79-0417**			
2	AL0-17-0103	RES ARRAY 4X10K 1/10W 0603	3	R24,73,83
2	AL0-17-0104	RES ARRAY 4X100K 1/10W 0603	1	R74
2	AL0-17-0470	RES ARRAY 4X47 1/10W 0603	8	R114~121
2	AL0-17-0472	RES ARRAY 4X4.7K 1/10W 0603	2	R6,61

2	AL0-17-0680	RES ARRAY 4X68 1/10W 0603	10	R36,37,40,41,51,97~100,112
2	AL0-17-2470	RES ARRAY 4X47 1/16W 0402	32	R1,2,23,25~27,29~33,58~60,70,72,75~81
				R84~91,93
2	AL1-07-0102	E.CAP 1000UF/6.3V	2	C5,7
2	AL1-16-0823	E.CAP 820UF/6.3V	3	C2~4
2	AL1-56-0151	CCAP SMD 150PF/50V 5% 0805 NPO	1	C1
2	AL1-60-2222	E.CAP 22UF/16V SMD	1	C6
2	AL1-62-0104	CCAP SMD 1UF/50V 10% 0603 X7	111	C8,11,13~18,21~35,37~43,45,48~55,57,59
				C60~62,65~70,73~84,86,87,90,92~101,104
				C105~114,116~127,129,131~142
2	AL1-70-3221	Solid Tantalum Electrolytic Ca	4	C12,56,71,128
2	AL1-71-3102	Solid Tantalum Electrolytic Ca	18	C9,10,19,20,36,44,46,47,58,63,64,72,85
				C88,89,91,115,130
2	AL2-51-0140	DIODE POWER SCHOTTKY MBRS140LT	3	D1,2,6
2	AL2-51-4003	DIODE POWER 300V 1A SMA	3	D3~5
2	AL2-56-0749	TRANS MED-POWER PNP FZT749 SOT	1	Q1
2	AL2-61-2517	REG VOLTAGE AP1117 1.5V SOT-22	1	U11
2	AL2-61-3463	IC REG VOLTAGE MC34063A ADJ 10	1	U3
2	AL2-65-2017	IC 74LVC2G17 DUAL GATE SCHMITT	3	U7,13,14
2	AL2-65-2305	IC MPC962305 ZERO DELAY BUFFER	2	U15,16
2	AL2-66-3216	IC SDRAM 4Mb x 16 x 4 BANK 3.3	4	U5,6,18,19
2	AL2-70-6713	IC MPU DSP TMS320C6713B 272-PI	2	U4,9
2	AL2-80-0010	IC FPGA EP1C4F324C8 324-PIN BG	1	U12
2	AL4-14-4002	HEADER DIL 40-PIN 1 MALE SHR	2	(J2,9)
2	AL4-15-0803	HEADER SIL 8-PIN 3.96mm MALE L	1	(J6)
2	AL4-20-0001	HEADER DIL 10-PIN 1mm FEMALE S	1	(J4)
2	AL4-20-0002	HEADER DIL 14-PIN 1mm FEMALE S	2	(J1,3)
2	AL4-20-4000	HEADER DIL 40-PIN .050 MALE SM	2	(J7,8)
2	AL4-21-5001	CON SIL 50-PIN FFC/FPC 0.5mm 1	1	(J5)
2	AL7-01-0049	OSCILLATOR 25 MHz 3.3V SMD	2	U1,8
2	AL7-20-0067	INDUCTOR 33uH 1.8A SMD	1	L1
2	AL7-33-0103	IC FILTER EMI SMD CHIP 2A 50V	2	E1,2
2	AL9-40-0417	PCB EXPANSON DIGITAL AC35	1	-
2	CS102J5003NPO	CCAP SMD 1000PF/50V 5% 0603 NP	2	C102,103
2	RS00018J05	RES 0Ω 5% SMD 0805	4	R14,28,122,123
2	RS01018J05	RES 1Ω 5% SMD 0805	5	R18~22
2	RS10218J05	RES 1K 5% SMD 0805	12	R3,4,10,12,13,15,17,56,63,65,66,82
2	RS10318J05	RES 10K 5% SMD 0805	11	R5,8,9,35,39,57,62,67,69,94,96
2	RS10418J05	RES 100K 5% SMD 0805	1	R71
2	RS12118J05	RES 120Ω 5% SMD 0805	1	R16
2	RS47218J05	RES 4.7K 5% SMD 0805	2	R46,106
2	RS56218J05	RES 5.6K 5% SMD 0805	2	R42,101
2	RS68018J05	RES 68Ω 5% SMD 0805	10	R38,44,45,48,53,95,103,104,107,110
2	RS68218J05	RES 6.8K 5% SMD 0805	2	R50,109
2	RS82018J05	RES 82Ω 5% SMD 0805	10	R43,47,49,52,54,102,105,108,111,113
1	**AL9-79-0432A**	**CONTROL PCB ASS'Y**	**1**	
2	AA415015J	Switch Tact Stem Height:4.3mm,	6	S3,4,8,12,41,42
2	AA812086J	LED GREEN L-934SGD	1	D12
2	AA812087J	LED RED L-934SRD-G	2	D4,8
2	AA822352X	Switch Rotational Encode 24Pul	1	S13
2	AL0-17-0101	RES ARRAY 4X100 1/10W 0603	2	R16,17
2	AL0-17-0103	RES ARRAY 4X10K 1/10W 0603	4	R9,11,43,48

2	AL0-17-0221	RES ARRAY 4X220 1/10W 0603	2	R1,2
2	AL1-56-0102	CCAP SMD 1000PF/100V 5% 0805 N	2	C4,5
2	AL1-56-0104	CCAP SMD 1UF/50V 10% 0805 X7	7	C1,6,7,11,13,15,18
2	AL2-51-4401	TRANS NPN 2N4401 40V 1A SOT-23	6	Q1,15,25,29~31
2	AL2-51-4403	TRANS PNP 2N4403 40V 800mA SOT	9	Q6~9,18~21,24
2	AL2-56-5592	TRANS MED-POWER NPN 2SC5592 SO	4	Q2~5
2	AL2-62-0000	IC 74AHC00 QUAD 2-IN POS NAND	1	U2
2	AL2-62-0032	IC 74AHC32 QUAD 2-IN POS OR SO	1	U1
2	AL2-62-0138	IC 74AHC138 3-8 DECODER/DEMUX	1	U3
2	AL2-62-0541	IC 74AHC541 OCTAL BUFFERS/DRIV	2	U8,9
2	AL2-62-0574	IC 74AHC574 OCTAL D FF W/TRI-S	2	U5,10
2	AL3-02-0079	LED AMBER DIFFUSED L-934SYDK T	1	D3
2	AL3-02-0080	LED AMBER L-169XSYDK	8	D1,2,5~7,9~11
2	AL4-21-1300	CON SIL 13-PIN FFC/FPC 0.5mm 9	1	(J18)
2	AL4-21-2800	CON SIL 28-PIN FFC/FPC 0.5mm 9	1	(J9)
2	BALE48201-5A	LED FIXED 1.5MM	12	(D1~12)
2	EC22616TS	E.CAP 22UF/16V(MINI)	4	C14,17,21,83
2	EC22716TS	E.CAP 220UF/16V(MINI)	1	C10
2	RS00018J05	RES 0Ω 5% SMD 0805	2	R31,32
2	RS10318J05	RES 10K 5% SMD 0805	10	R15,18,20~25,29,30
2	RS13018J05	RES 13Ω 5% SMD 0805	9	R3,6,10,14,19,35,37,44,54
2	RS20218J05	RES 2K 5% SMD 0805	2	R34,53
2	RS22118J05	RES 220Ω5% SMD 0805	1	R76
2	RS68118J05	RES 680Ω 5% SMD 0805	2	R46,67
2	SWSKRGAED010	Switch Tact 5mm 160gf Horizontal DIP	35	S1,2,5~7,9~11,15~22,24~40,43,44
2	TE622000201	Pin Header 90° Pitch:2.00mm S	2	(J1)
2	TE622000401	Pin Header 90° Pitch:2.00mm S	1	(J4)
2	TE622000901	Pin Header 90° Pitch:2.00mm S	1	(J2A)
2	TE622001101	Pin Header 90° Pitch:2.00mm S	1	(J2B)
2	TE952541201	Pin Header 90° Pitch:2.54mm D	1	(J5)
1	**AL9-79-0432B**	**VOLUME PCB ASS'Y**	**1**	
2	AL0-09-0008	POT 10KA DUAL	1	R162
2	AL0-09-0083	POT 10KB DUAL VERT 15mm D-SHAF	1	P1
2	AL0-16-1002	RES 10K 1% SMD 0805	2	R58,60
2	CN0220000503	Flat Cable 2P Pitch 2.00mm Sin	1	(J15)
2	EC47616TS	E.CAP 47UF/16V (MINI)	4	C86,96,98,104
2	SWSKD22	Switch Slide 2P2T	1	S14
2	SWSKRGAED010	Switch Tact 5mm 160gf Horizontal DIP	1	S23
2	TE10200602	Pin Header 90° Pitch:2.00mm S	1	J12
2	TE622001201	Pin Header 90° Pitch:2.00mm S	1	J7
2	TE812000211	Pin Header 180° Pitch:2.00mm	1	J15
1	**AL9-79-0432C**	**SYNTH PCB ASS'Y**	**1**	
2	AL3-02-0080	LED AMBER L-169XSYDK	1	D45
2	BALE48201-5A	LED FIXED 1.5MM	1	(D45)
2	CN0620000501	Flat Cable 6P Pitch 2.00mm Sin	1	(J21)
2	SWSKRGAED010	Switch Tact 5mm 160gf Horizontal DIP	3	S48,65,66
2	TE812000611	Pin Header 180° Pitch:2.00mm	1	J21

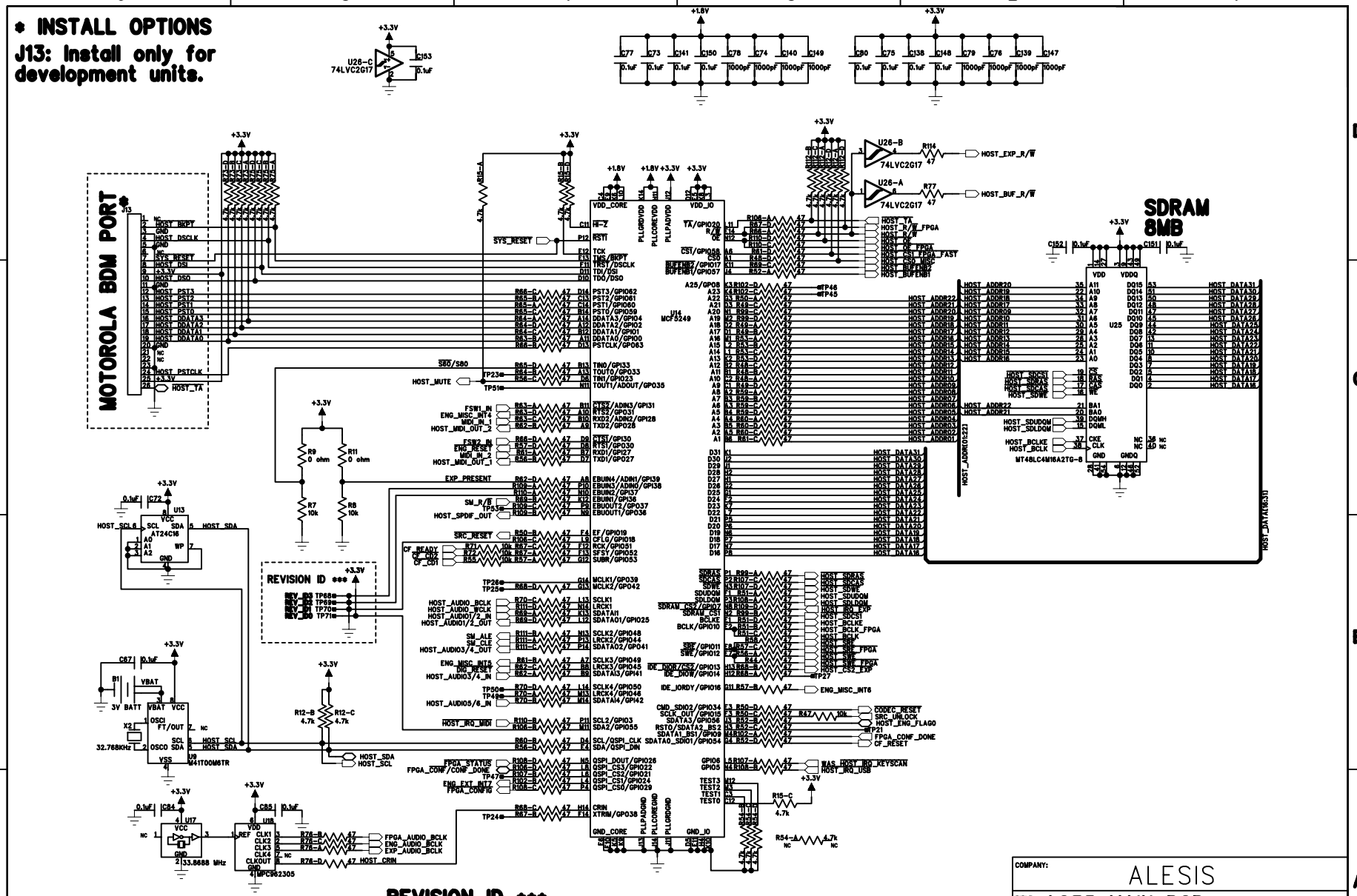

REVISION ID ***

	REV_ID3 GPI38	REV_ID2 GPI37	REV_ID1 GPI018	REV_ID0 GPI055
REV 1	0	0	0	0
REV A	0	0	0	1
REV B	0	0	1	0
REV C	0	0	1	1
⋮	⋮	⋮	⋮	⋮
REV P	1	1	1	1

DRAWN: SCHMANSKI	DATED: 21 MAR 2007	COMPANY: ALESIS	
RELEASED:	DATED:	TITLE: AC35 MAIN PCB HOST LOCAL BUS	
		PART NUMBER: 9-40-0407-A	
		ASSY NUMBER: 9-79-0407-A-0	
		FILENAME: AC35MNA03A.SCH	SIZE: C
		SCALE:	SHEET: 1 OF 5

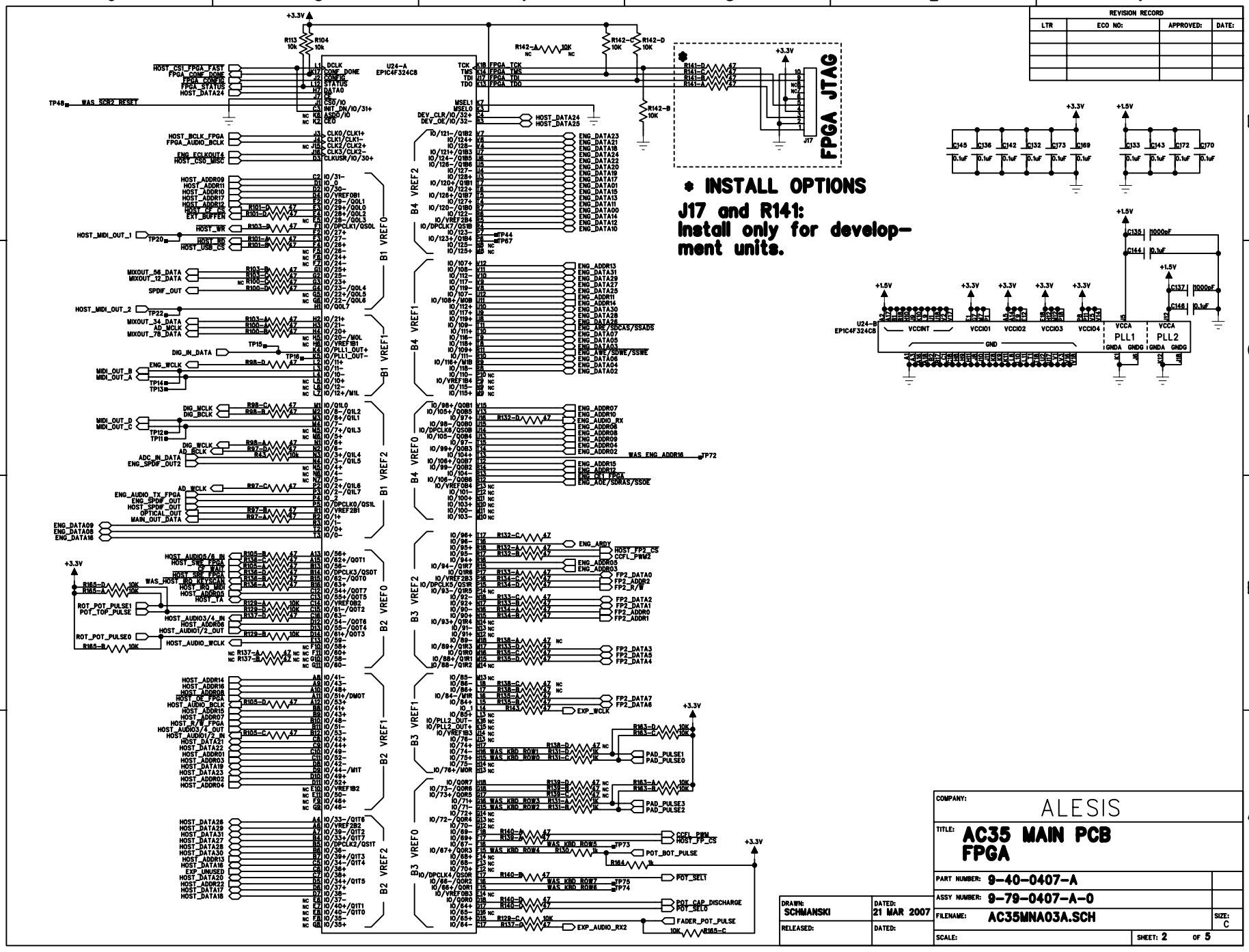
U24-A
EP1C4F324C8
FPGA JTAG
J17
* INSTALL OPTIONS
J17 and R141:
Install only for development units.
U24-B
EP1C4F324C8
PLL1
PLL2
REVISION RECORD
LTR
ECO NO:
APPROVED:
DATE:
COMPANY:
ALESIS
TITLE:
AC35 MAIN PCB
FPGA
PART NUMBER: 9-40-0407-A
ASSY NUMBER: 9-79-0407-A-0
FILENAME: AC35MNA03A.SCH
SIZE: C
SCALE:
SHEET: 2 OF 5
DRAWN: SCHMANSKI
DATED: 21 MAR 2007
RELEASED:
DATED:

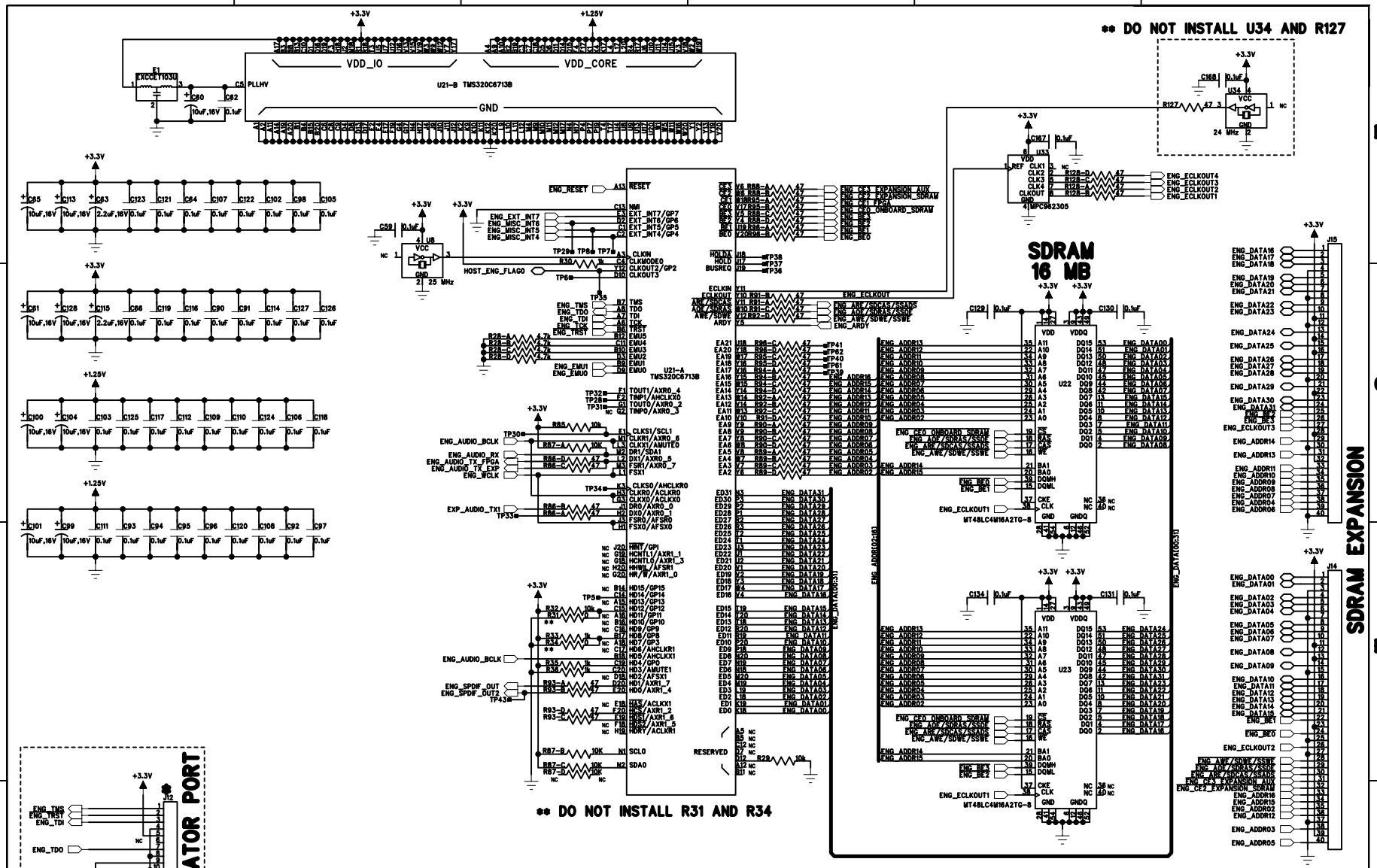

COMPANY: ALESIS

TITLE: AC35 MAIN PCB DSPs

PART NUMBER: 9-40-0407-A

ASSY NUMBER: 9-79-0407-A-0

FILENAME: AC35MNA03A.SCH

SIZE: C

SCALE:

SHEET: 3 OF 5

DRAWN: SCHMANSKI

DATED: 21 MAR 2007

RELEASED:

DATED:

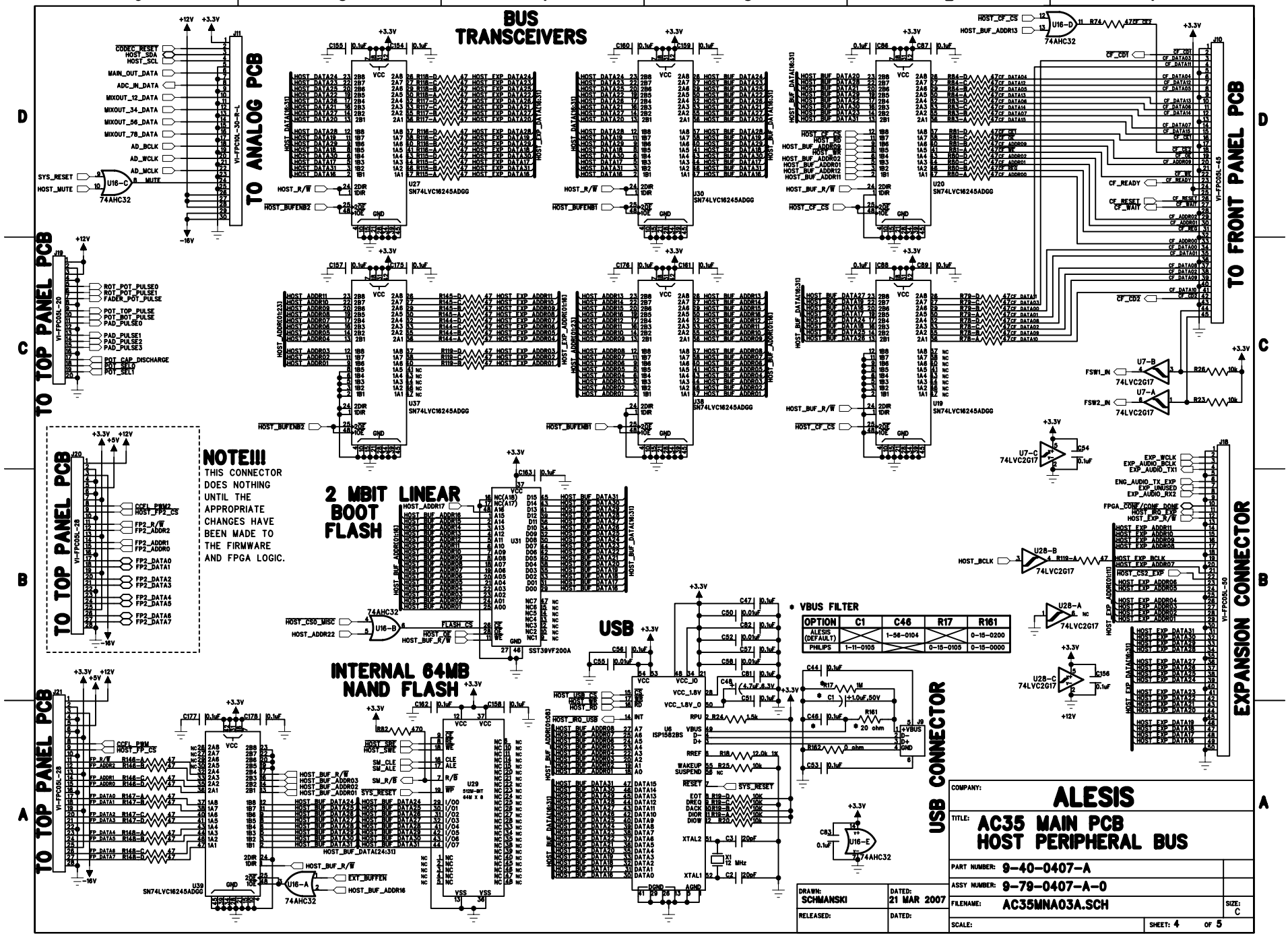
BUS TRANSCEIVERS
TO ANALOG PCB
TO FRONT PANEL PCB
TO TOP PANEL PCB
NOTE!!!
THIS CONNECTOR DOES NOTHING UNTIL THE APPROPRIATE CHANGES HAVE BEEN MADE TO THE FIRMWARE AND FPGA LOGIC.
2 MBIT LINEAR BOOT FLASH
INTERNAL 64MB NAND FLASH
USB
USB CONNECTOR
EXPANSION CONNECTOR
* VBUS FILTER
OPTION | C1 | C46 | R17 | R161
ALESIS (DEFAULT) | | 1-56-0104 | | 0-15-0200
PHILIPS | 1-11-0105 | | 0-15-0105 | 0-15-0000
COMPANY: ALESIS
TITLE: AC35 MAIN PCB HOST PERIPHERAL BUS
PART NUMBER: 9-40-0407-A
ASSY NUMBER: 9-79-0407-A-0
FILENAME: AC35MNA03A.SCH
SIZE: C
SCALE:
SHEET: 4 OF 5
DRAWN: SCHMANSKI
DATED: 21 MAR 2007
RELEASED:
DATED:

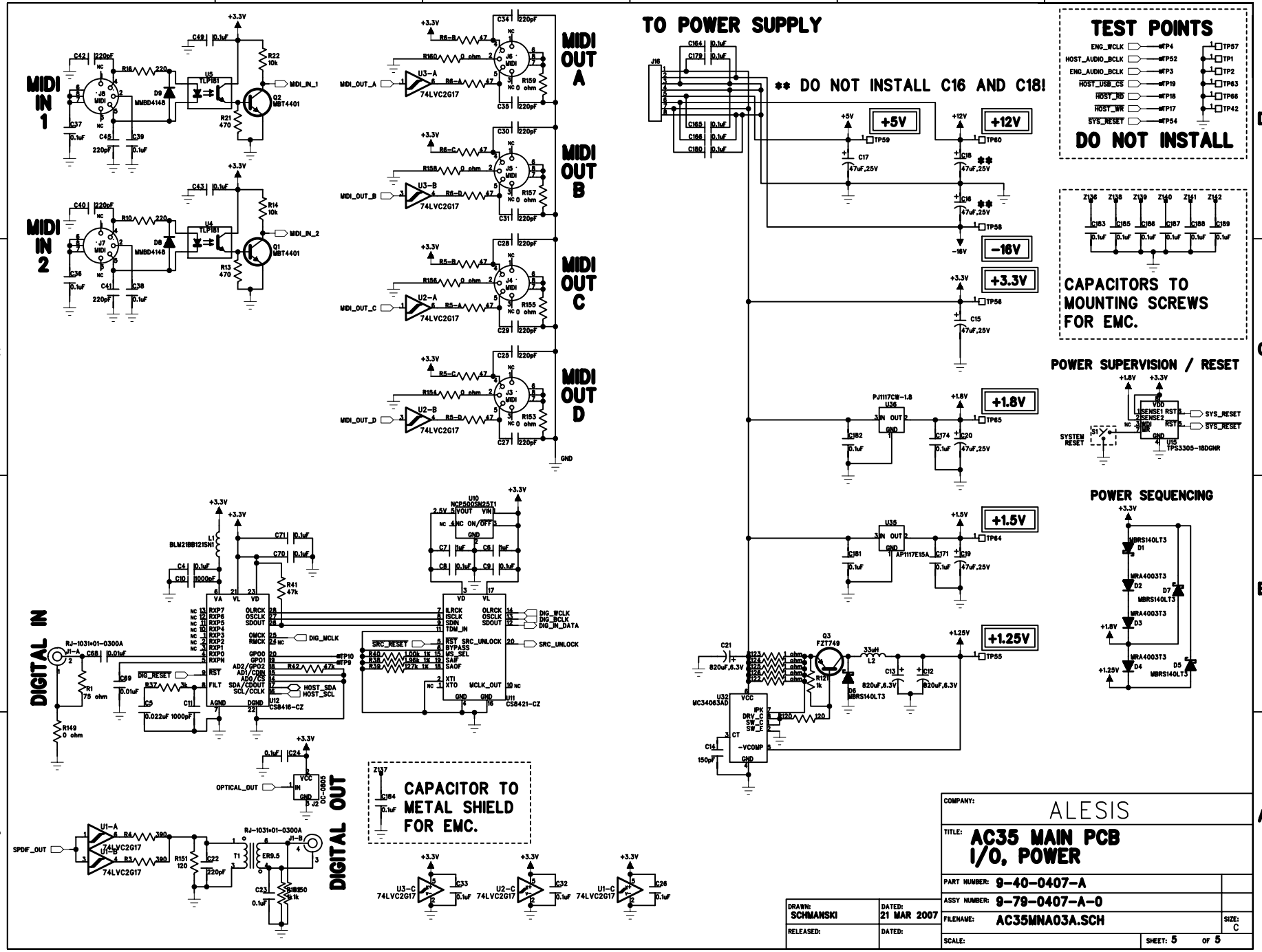
MIDI IN 1
MIDI IN 2
MIDI OUT A
MIDI OUT B
MIDI OUT C
MIDI OUT D
TO POWER SUPPLY
** DO NOT INSTALL C16 AND C18!
TEST POINTS
DO NOT INSTALL
CAPACITORS TO MOUNTING SCREWS FOR EMC.
POWER SUPERVISION / RESET
POWER SEQUENCING
DIGITAL IN
DIGITAL OUT
CAPACITOR TO METAL SHIELD FOR EMC.
+5V
+12V
-16V
+3.3V
+1.8V
+1.5V
+1.25V
COMPANY: ALESIS
TITLE: AC35 MAIN PCB I/O, POWER
PART NUMBER: 9-40-0407-A
ASSY NUMBER: 9-79-0407-A-0
FILENAME: AC35MNA03A.SCH
SIZE: C
SCALE:
SHEET: 5 OF 5
DRAWN: SCHMANSKI
DATED: 21 MAR 2007
RELEASED:
DATED:

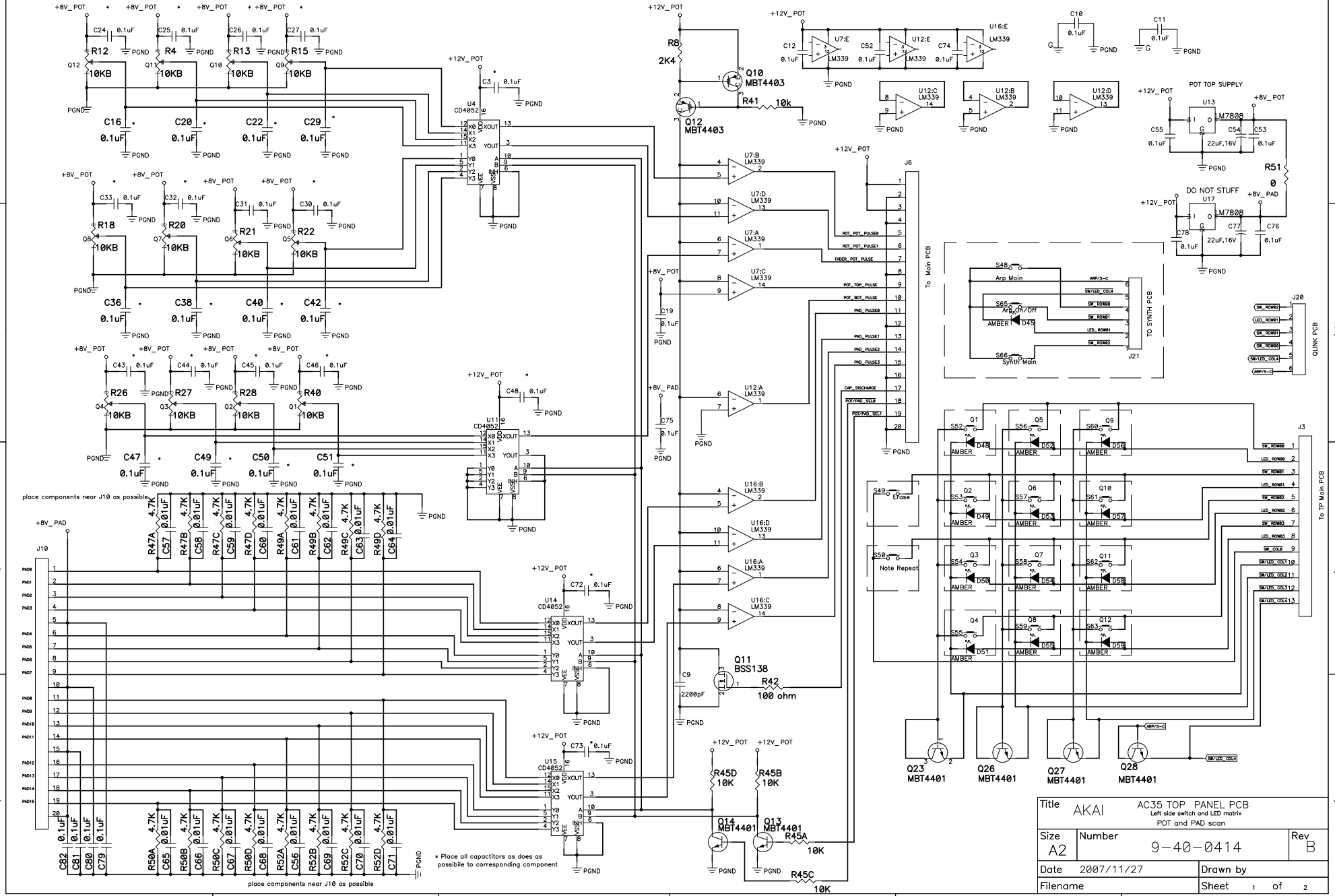
Title
AKAI
AC35 TOP PANEL PCB
Left side switch and LED matrix
POT and PAD scan
Size
A2
Number
9-40-0414
Rev
B
Date
2007/11/27
Drawn by
Filename
Sheet 1 of 2
* Place all capacitors as does as possibile to corresponding component
place components near J10 as possible
To Main PCB
TO SYNTH PCB
QLINK PCB
To TP Main PCB
POT TOP SUPPLY
DO NOT STUFF
Arp Main
Arp On/Off
Synth Main
Erase
Note Repeat
Q10 MBT4403
Q12 MBT4403
Q11 BSS138
Q23 MBT4401
Q26 MBT4401
Q27 MBT4401
Q28 MBT4401
Q14 MBT4401
Q13 MBT4401
U4 CD4052
U11 CD4052
U14 CD4052
U15 CD4052
U7:E LM339
U12:E LM339
U16:E LM339
U12:C LM339
U12:B LM339
U12:D LM339
U7:B LM339
U7:D LM339
U7:A LM339
U7:C LM339
U12:A LM339
U16:B LM339
U16:D LM339
U16:A LM339
U16:C LM339
U13 LM7808
U17 LM7808
J6
J20
J21
J3
J10
R8 2K4
R41 10k
R42 100 ohm
R45A 10K
R45B 10K
R45C 10K
R45D 10K
R51 0
C9 2200pF
+12V_POT
+8V_POT
+8V_PAD
PGND

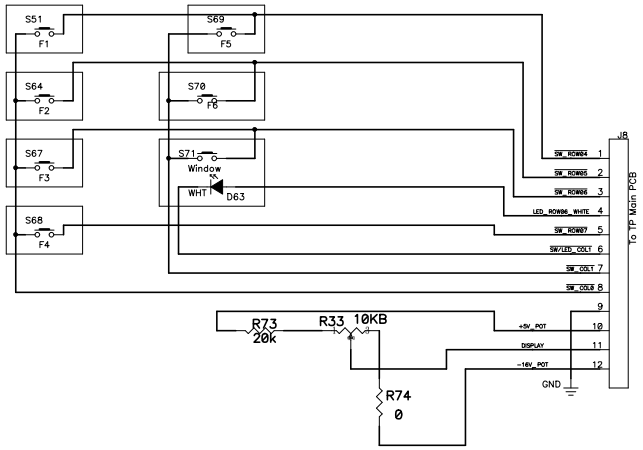

Title	AKAI AC35 TOP PANEL PCN Soft button switch and LED matrix		
Size A2	Number 9-40-0414		Rev B
Date 2007/11/27		Drawn by	
Filename		Sheet 2 of 2	

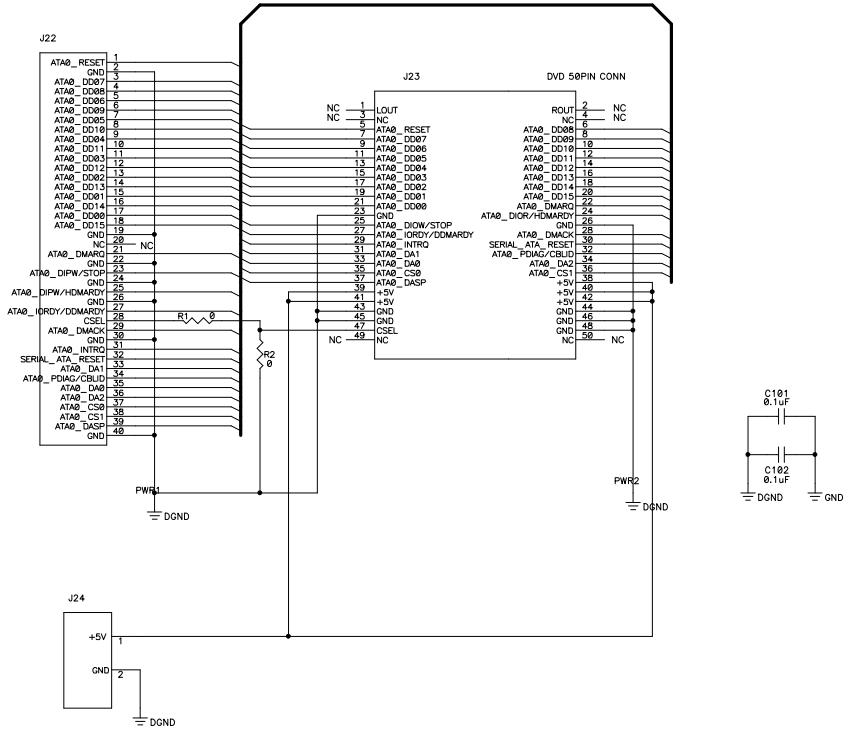

Title		
Size A2	Number	Rev
Date	Drawn by	
Filename	Sheet of	

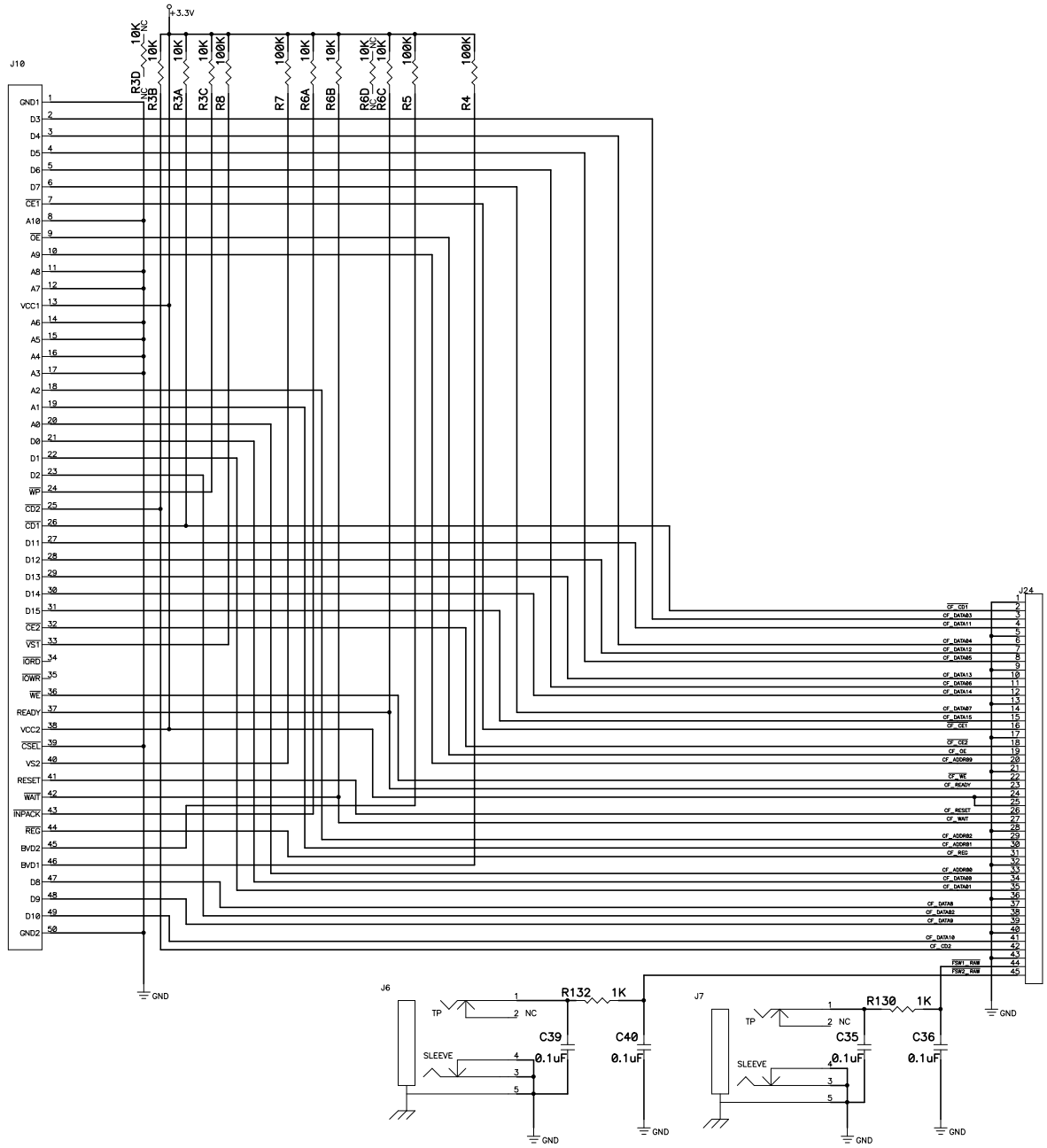

Title	AKAI AC35 FRONT PANEL PCB	
Size A2	Number 9-40-0415	Rev 1
Date 2007/02/13		Drawn by
Filename		Sheet 1 of 1

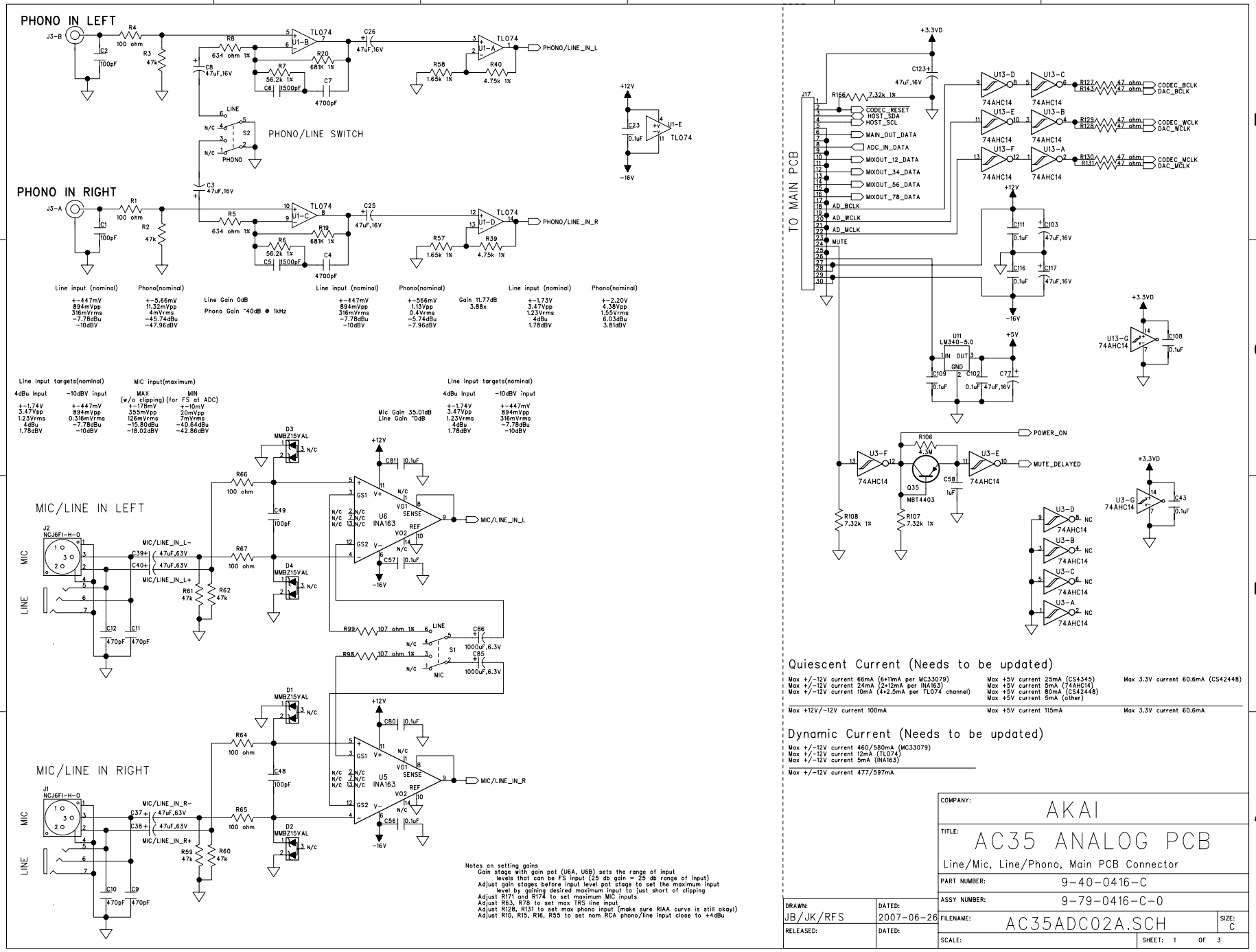

Quiescent Current (Needs to be updated)

Max +/-12V current 66mA (6*11mA per MC33079)
Max +/-12V current 24mA (2*12mA per INA163)
Max +/-12V current 10mA (4*2.5mA per TL074 channel)

Max +5V current 25mA (CS4345)
Max +5V current 5mA (74AHC14)
Max +5V current 80mA (CS42448)
Max +5V current 5mA (other)

Max 3.3V current 60.6mA (CS42448)

Max +12V/-12V current 100mA
Max +5V current 115mA
Max 3.3V current 60.6mA

Dynamic Current (Needs to be updated)

Max +/-12V current 460/580mA (MC33079)
Max +/-12V current 12mA (TL074)
Max +/-12V current 5mA (INA163)

Max +/-12V current 477/597mA

COMPANY:	AKAI		
TITLE:	AC35 ANALOG PCB Line/Mic, Line/Phono, Main PCB Connector		
PART NUMBER:	9-40-0416-C		
ASSY NUMBER:	9-79-0416-C-0		
DRAWN: JB/JK/RFS	DATED: 2007-06-26	FILENAME: AC35ADC02A.SCH	SIZE: C
RELEASED:	DATED:	SCALE:	SHEET: 1 OF 3

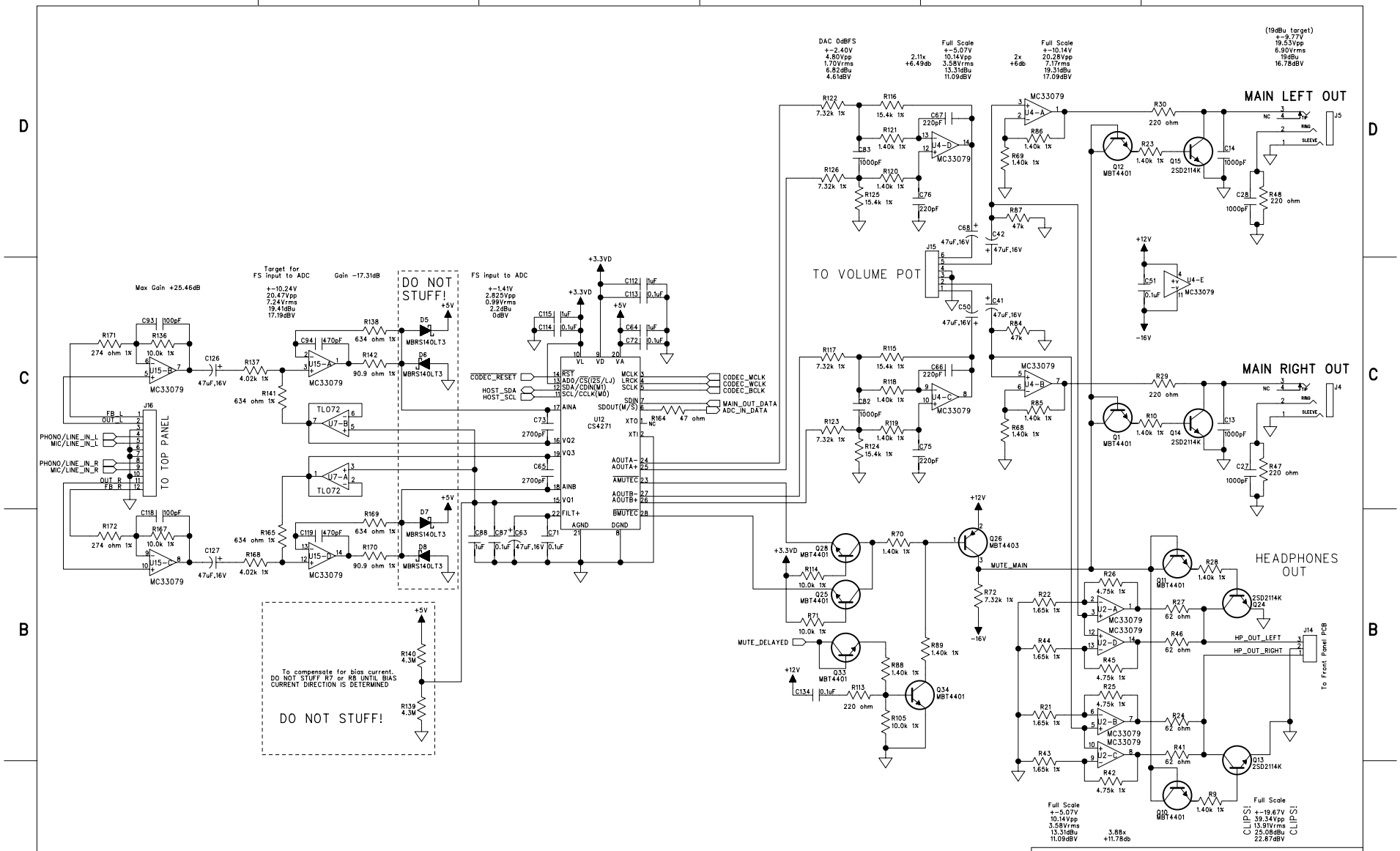

COMPANY:	AKAI
TITLE:	AC35 ANALOG PCB
	CODEC, CODEC in/out buffers, Main and HP driver
PART NUMBER:	9-40-0416-C
ASSY NUMBER:	9-79-0416-C-0
FILENAME:	AC35ADC02A.SCH
SIZE:	C
SCALE:	
SHEET:	2 OF 3
DRAWN:	JB/JK/RFS
DATED:	2007-06-26
RELEASED:	
DATED:	

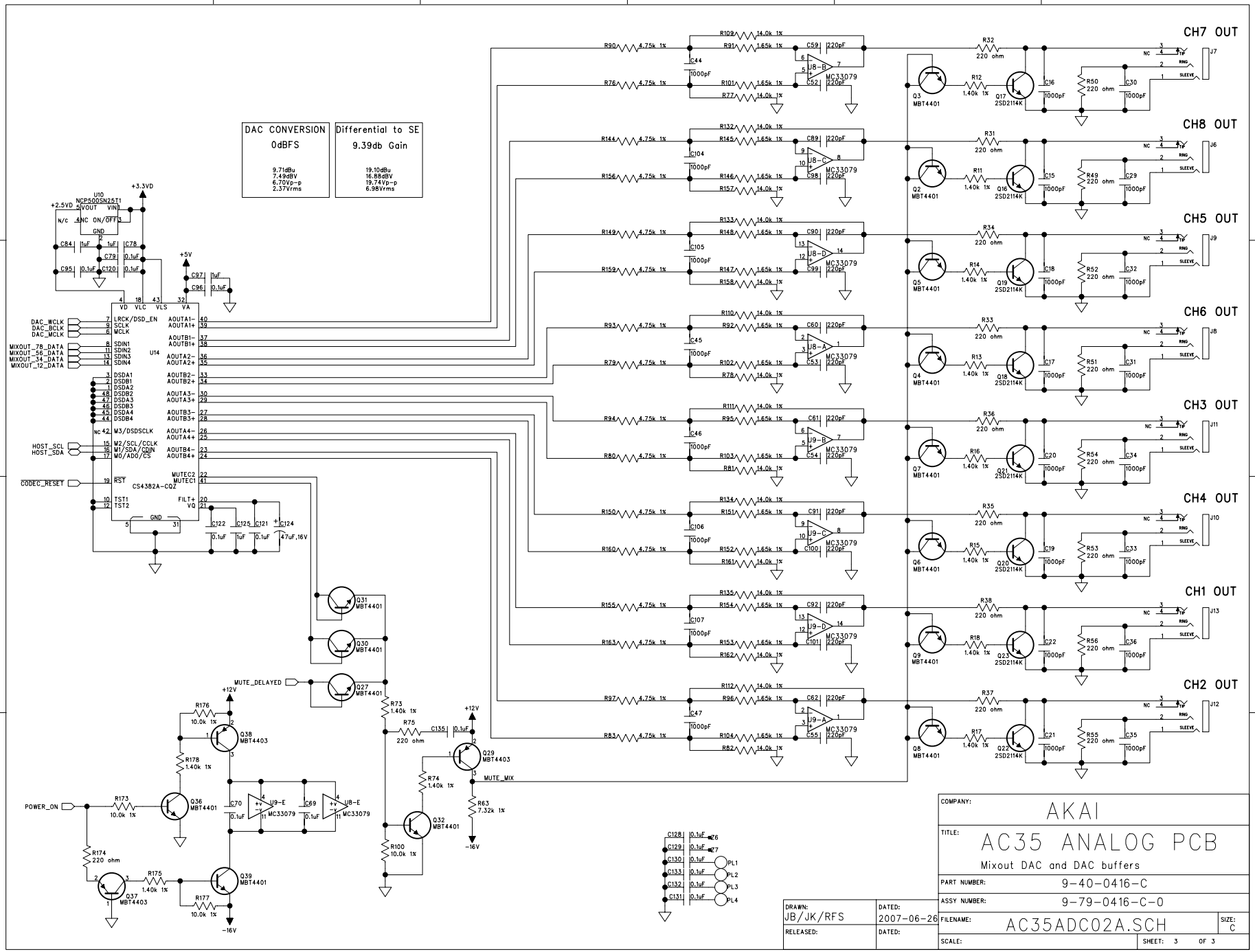
DAC CONVERSION
0dBFS
9.71dBu
7.49dBV
6.70Vp-p
2.37Vrms
Differential to SE
9.39db Gain
19.10dBu
16.88dBV
19.74Vp-p
6.98Vrms
CH7 OUT
CH8 OUT
CH5 OUT
CH6 OUT
CH3 OUT
CH4 OUT
CH1 OUT
CH2 OUT
U14
CS4382A-CQZ
U10
NCP500SN25T1
+3.3VD
+2.5VD
+5V
+12V
-16V
DAC_WCLK
DAC_BCLK
DAC_MCLK
MIXOUT_78_DATA
MIXOUT_56_DATA
MIXOUT_34_DATA
MIXOUT_12_DATA
HOST_SCL
HOST_SDA
CODEC_RESET
MUTE_DELAYED
MUTE_MIX
POWER_ON
MC33079
MBT4401
MBT4403
2SD2114K
COMPANY:
AKAI
TITLE:
AC35 ANALOG PCB
Mixout DAC and DAC buffers
PART NUMBER:
9-40-0416-C
ASSY NUMBER:
9-79-0416-C-0
FILENAME:
AC35ADC02A.SCH
SIZE:
C
SCALE:
SHEET: 3 OF 3
DRAWN:
JB/JK/RFS
DATED:
2007-06-26
RELEASED:
DATED:

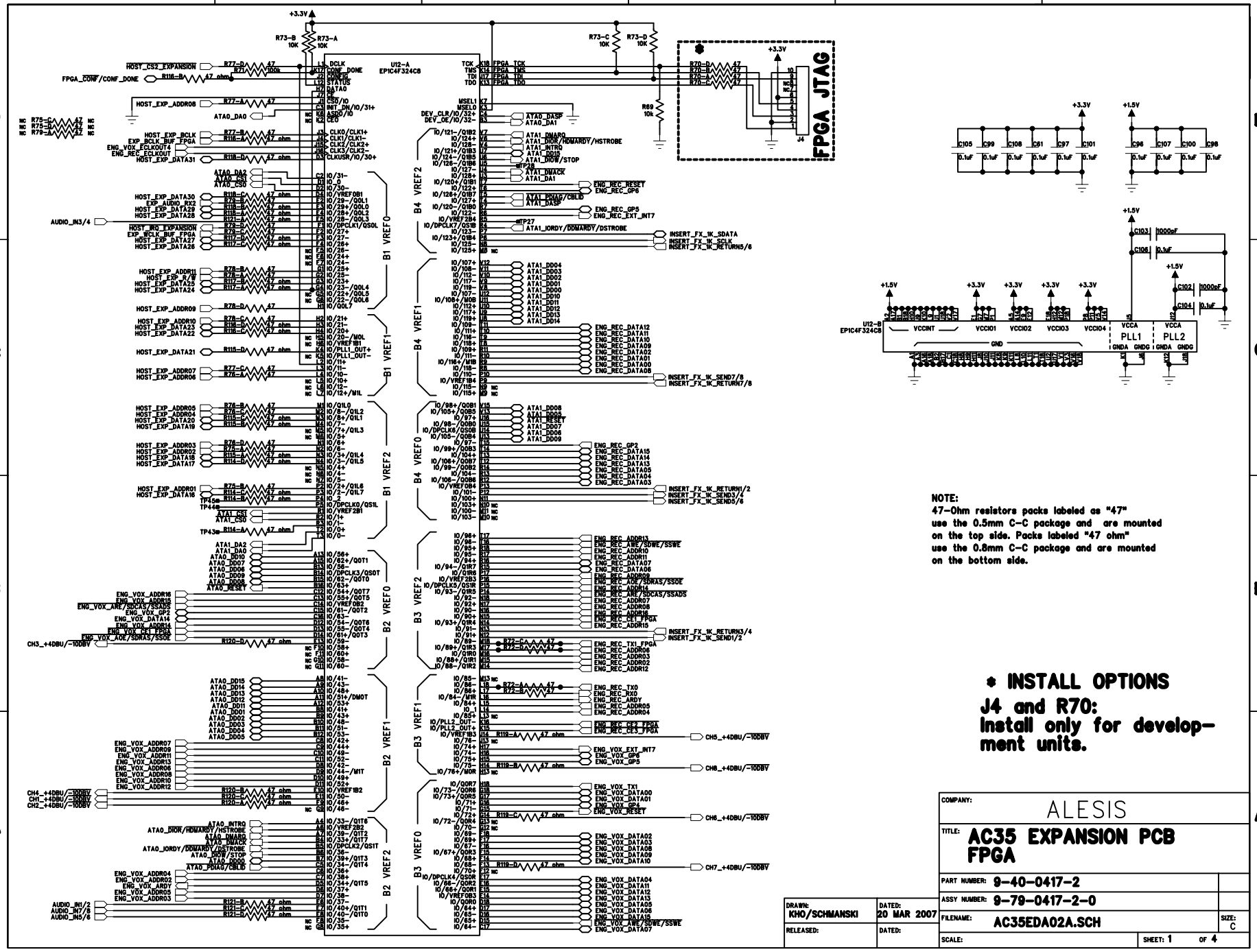
U12-A
EP1C4F324CB
FPGA JTAG
J4
U12-B
EP1C4F324CB
PLL1
PLL2
VCCINT
VCCIO1
VCCIO2
VCCIO3
VCCIO4
VCCA
GND
GNDA
GNDG
+3.3V
+1.5V
R73-A 10K
R73-B 10K
R73-C 10K
R73-D 10K
R69 10k
B1 VREF0
B1 VREF1
B1 VREF2
B2 VREF0
B2 VREF1
B2 VREF2
B3 VREF0
B3 VREF1
B3 VREF2
B4 VREF0
B4 VREF1
B4 VREF2
HOST_CS2_EXPANSION
FPGA_CONF/CONF_DONE
HOST_EXP_ADDR08
ATA0_DA0
HOST_EXP_BCLK
EXP_BCLK_BUF_FPGA
ENG_VOX_ECLKOUT4
ENG_REC_ECLKOUT
HOST_EXP_DATA31
HOST_EXP_DATA30
EXP_AUDIO_RX2
HOST_EXP_DATA29
HOST_EXP_DATA28
AUDIO_IN3/4
HOST_IRQ_EXPANSION
EXP_WCLK_BUF_FPGA
HOST_EXP_DATA27
HOST_EXP_DATA26
HOST_EXP_ADDR11
HOST_EXP_R/W
HOST_EXP_DATA25
HOST_EXP_DATA24
HOST_EXP_ADDR09
HOST_EXP_ADDR10
HOST_EXP_DATA23
HOST_EXP_DATA22
HOST_EXP_DATA21
HOST_EXP_ADDR07
HOST_EXP_ADDR06
HOST_EXP_ADDR05
HOST_EXP_ADDR04
HOST_EXP_DATA20
HOST_EXP_DATA19
HOST_EXP_ADDR03
HOST_EXP_ADDR02
HOST_EXP_DATA18
HOST_EXP_DATA17
HOST_EXP_ADDR01
HOST_EXP_DATA16
ENG_VOX_ADDR16
ENG_VOX_ADDR13
ENG_VOX_AWE/SDCAS/SSOE
ENG_VOX_GP2
ENG_VOX_DATA14
ENG_VOX_ADDR14
ENG_VOX_CE1_FPGA
ENG_VOX_AOE/SDRAS/SSOE
CH3_+4DBU/-10DBV
ENG_VOX_ADDR07
ENG_VOX_ADDR09
ENG_VOX_ADDR11
ENG_VOX_ADDR13
ENG_VOX_ADDR06
ENG_VOX_ADDR08
ENG_VOX_ADDR10
ENG_VOX_ADDR12
CH4_+4DBU/-10DBV
CH1_+4DBU/-10DBV
CH2_+4DBU/-10DBV
ENG_VOX_ADDR04
ENG_VOX_ADDR02
ENG_VOX_ARDY
ENG_VOX_ADDR05
ENG_VOX_ADDR03
AUDIO_IN1/2
AUDIO_IN7/8
AUDIO_IN5/6
ATA0_DIOR/HDMARDY/HSTROBE
ATA0_DIOW/STOP
ATA0_PDIAG/CBLID
ATA0_IORDY/DDMARDY/DSTROBE
ATA1_DIOR/HDMARDY/HSTROBE
ATA1_DIOW/STOP
ATA1_PDIAG/CBLID
ATA1_IORDY/DDMARDY/DSTROBE
ENG_REC_RESET
ENG_REC_GP6
ENG_REC_GP5
ENG_REC_EXT_INT7
INSERT_FX_1K_SDATA
INSERT_FX_1K_SCLK
INSERT_FX_1K_RETURN5/6
INSERT_FX_1K_SEND7/8
INSERT_FX_1K_RETURN7/8
INSERT_FX_1K_RETURN1/2
INSERT_FX_1K_SEND3/4
INSERT_FX_1K_SEND5/6
INSERT_FX_1K_RETURN3/4
INSERT_FX_1K_SEND1/2
ENG_REC_TX1_FPGA
ENG_REC_TX0
ENG_REC_RX0
ENG_REC_ARDY
ENG_REC_CE2_FPGA
ENG_REC_CE3_FPGA
CH5_+4DBU/-10DBV
ENG_VOX_EXT_INT7
ENG_VOX_GP6
ENG_VOX_GP5
CH8_+4DBU/-10DBV
ENG_VOX_TX1
ENG_VOX_RESET
CH6_+4DBU/-10DBV
CH7_+4DBU/-10DBV
NOTE:
47-Ohm resistors packs labeled as "47"
use the 0.5mm C-C package and are mounted
on the top side. Packs labeled "47 ohm"
use the 0.8mm C-C package and are mounted
on the bottom side.
* INSTALL OPTIONS
J4 and R70:
Install only for development units.
COMPANY: ALESIS
TITLE: AC35 EXPANSION PCB FPGA
PART NUMBER: 9-40-0417-2
ASSY NUMBER: 9-79-0417-2-0
FILENAME: AC35EDA02A.SCH
SIZE: C
SCALE:
SHEET: 1 OF 4
DRAWN: KHO/SCHMANSKI
DATED: 20 MAR 2007
RELEASED:
DATED:

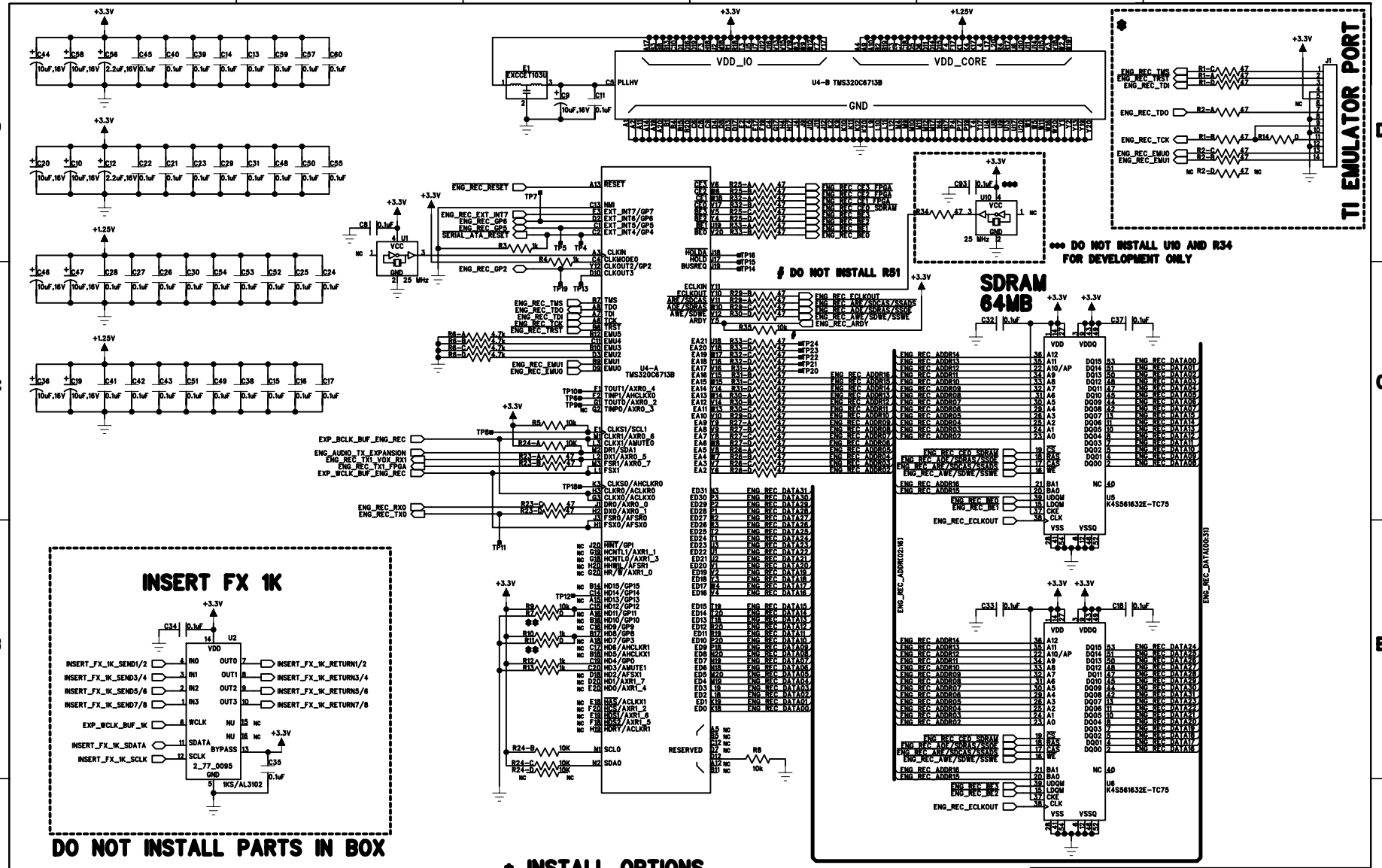

COMPANY: ALESIS

TITLE: AC35 EXPANSION PCB RECORDING DSP

PART NUMBER: 9-40-0417-2

ASSY NUMBER: 9-79-0417-2-0

FILENAME: AC35EDA02A.SCH

SIZE: C

SCALE:

SHEET: 2 OF 4

DRAWN: KHO/SCHMANSKI

DATED: 20 MAR 2007

RELEASED:

DATED:

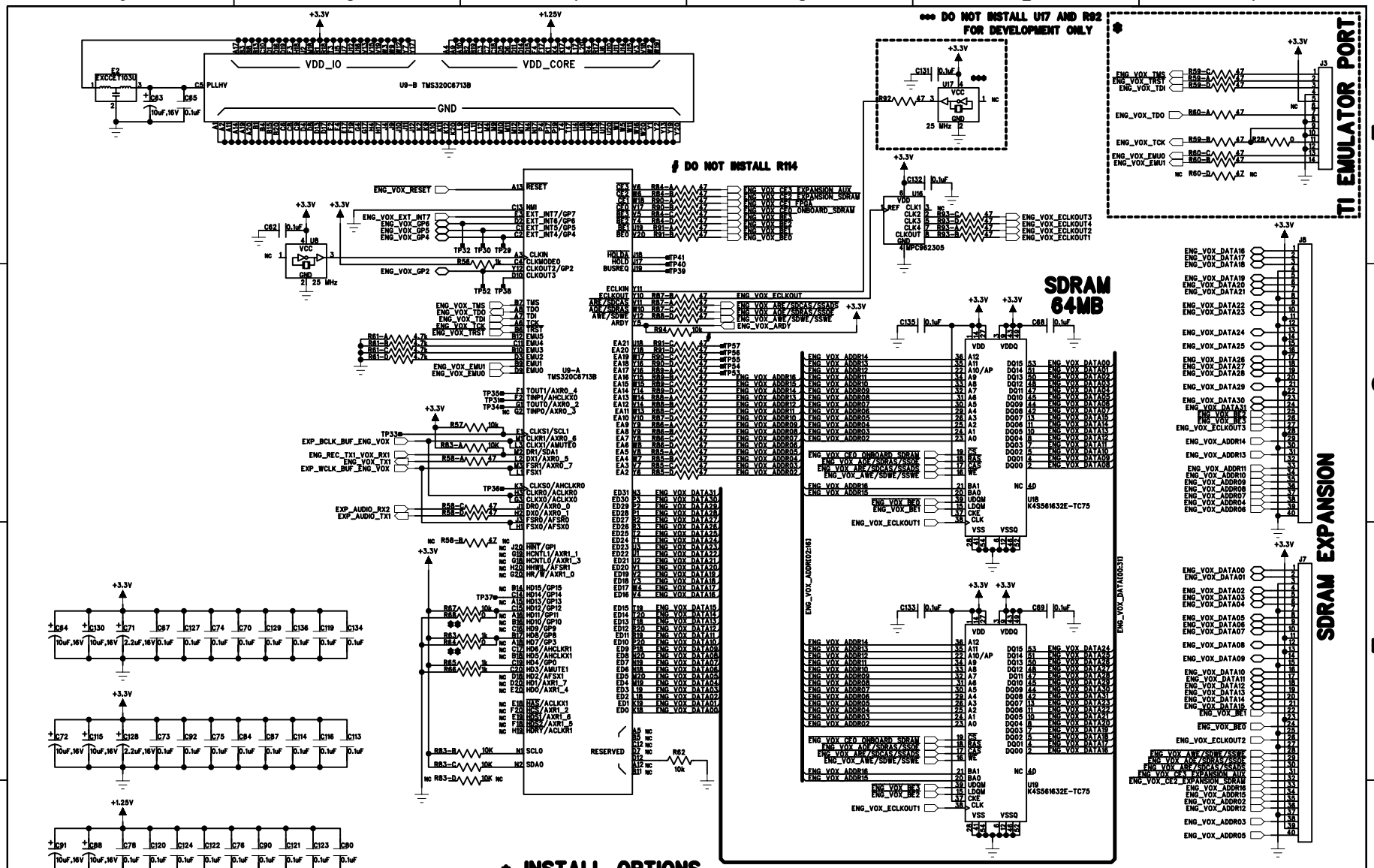

* INSTALL OPTIONS

J3, R28, R59-60: Install for development units only.

** DO NOT STUFF

R64 and R66 are for maintaining compatibility with the 6711 or the 6712D.

COMPANY:	ALESIS		
TITLE:	AC35 EXPANSION PCB VOICE DSP		
PART NUMBER:	9-40-0417-2		
ASSY NUMBER:	9-79-0417-2-0		
FILENAME:	AC35EDA02A.SCH		SIZE: C
SCALE:		SHEET: 3	OF 4
DRAWN: KHO/SCHMANSKI	DATED: 20 MAR 2007		
RELEASED:	DATED:		

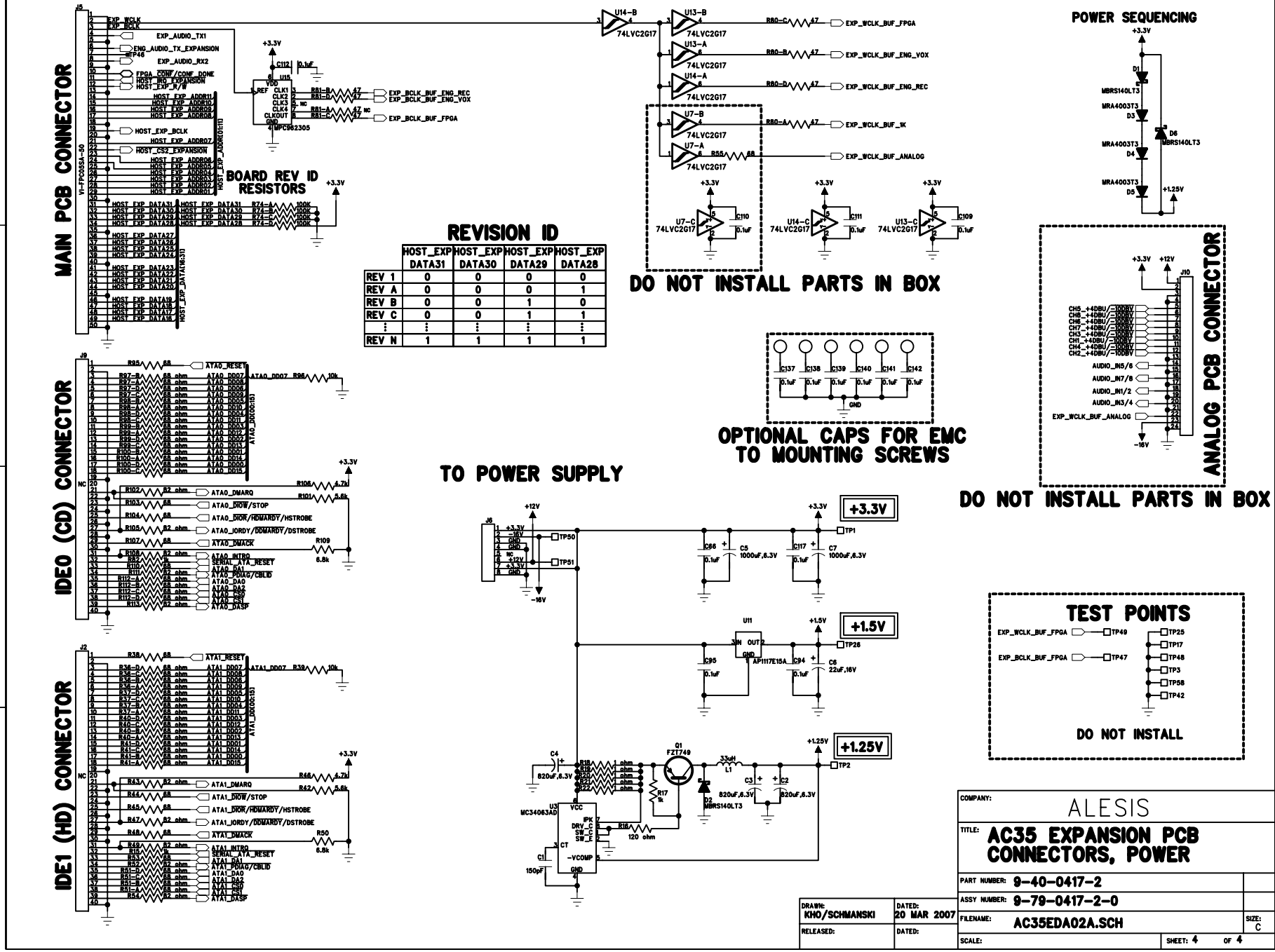
MAIN PCB CONNECTOR
J5
VI-FPC055A-50
EXP_WCLK
EXP_BCLK
EXP_AUDIO_TX1
ENG_AUDIO_TX_EXPANSION
EXP_AUDIO_RX2
FPGA_CONF/CONF_DONE
HOST_IRQ_EXPANSION
HOST_EXP_R/W
HOST_EXP_BCLK
HOST_CS2_EXPANSION
HOST_EXP_DATA31
HOST_EXP_DATA30
HOST_EXP_DATA29
HOST_EXP_DATA28
BOARD REV ID RESISTORS
+3.3V
C112 0.1uF
U15
VDD
REF CLK1
CLK2
CLK3
CLK4
CLKOUT
GND
MPC962305
EXP_BCLK_BUF_ENG_REC
EXP_BCLK_BUF_ENG_VOX
EXP_BCLK_BUF_FPGA
U14-B
U13-B
U13-A
U14-A
U7-B
U7-A
U7-C
U14-C
U13-C
74LVC2G17
EXP_WCLK_BUF_FPGA
EXP_WCLK_BUF_ENG_VOX
EXP_WCLK_BUF_ENG_REC
EXP_WCLK_BUF_1K
EXP_WCLK_BUF_ANALOG
DO NOT INSTALL PARTS IN BOX
POWER SEQUENCING
D1 MBRS140LT3
D3 MRA4003T3
D6 MBRS140LT3
D4 MRA4003T3
D5 MRA4003T3
+1.25V
REVISION ID
HOST_EXP DATA31
HOST_EXP DATA30
HOST_EXP DATA29
HOST_EXP DATA28
REV 1 0 0 0 0
REV A 0 0 0 1
REV B 0 0 1 0
REV C 0 0 1 1
REV N 1 1 1 1
OPTIONAL CAPS FOR EMC TO MOUNTING SCREWS
C137 C138 C139 C140 C141 C142
0.1uF
GND
ANALOG PCB CONNECTOR
J10
+12V
-16V
AUDIO_IN5/6
AUDIO_IN7/8
AUDIO_IN1/2
AUDIO_IN3/4
EXP_WCLK_BUF_ANALOG
DO NOT INSTALL PARTS IN BOX
IDE0 (CD) CONNECTOR
J9
ATA0_RESET
ATA0_DMARQ
ATA0_DIOW/STOP
ATA0_DIOR/HDMARDY/HSTROBE
ATA0_IORDY/DDMARDY/DSTROBE
ATA0_DMACK
ATA0_INTRQ
SERIAL_ATA_RESET
ATA0_DA1
ATA0_PDIAG/CBLID
ATA0_DA0
ATA0_DA2
ATA0_CS0
ATA0_CS1
ATA0_DASP
R106 4.7k
R101 5.6k
R109 6.8k
IDE1 (HD) CONNECTOR
J2
ATA1_RESET
ATA1_DMARQ
ATA1_DIOW/STOP
ATA1_DIOR/HDMARDY/HSTROBE
ATA1_IORDY/DDMARDY/DSTROBE
ATA1_DMACK
ATA1_INTRQ
SERIAL_ATA_RESET
ATA1_DA1
ATA1_PDIAG/CBLID
ATA1_DA0
ATA1_DA2
ATA1_CS0
ATA1_CS1
ATA1_DASP
R46 4.7k
R42 5.6k
R50 6.8k
TO POWER SUPPLY
J6
TP50
TP51
+3.3V
TP1
C5 1000uF,6.3V
C7 1000uF,6.3V
U11
AP1117E15A
+1.5V
TP26
C6 22uF,16V
+1.25V
TP2
Q1 FZT749
D2 MBRS140LT3
L1 33uH
C4 820uF,6.3V
C3 820uF,6.3V
C2 820uF,6.3V
U3 MC34063AD
VCC
IPK
DRV_C
SW_C
SW_E
CT
-VCOMP
GND
R17 1k
R18 120 ohm
C1 150pF
TEST POINTS
EXP_WCLK_BUF_FPGA TP49
EXP_BCLK_BUF_FPGA TP47
TP25
TP17
TP48
TP3
TP58
TP42
DO NOT INSTALL
COMPANY: ALESIS
TITLE: AC35 EXPANSION PCB CONNECTORS, POWER
PART NUMBER: 9-40-0417-2
ASSY NUMBER: 9-79-0417-2-0
FILENAME: AC35EDA02A.SCH
SIZE: C
SCALE:
SHEET: 4 OF 4
DRAWN: KHO/SCHMANSKI
DATED: 20 MAR 2007
RELEASED:
DATED:

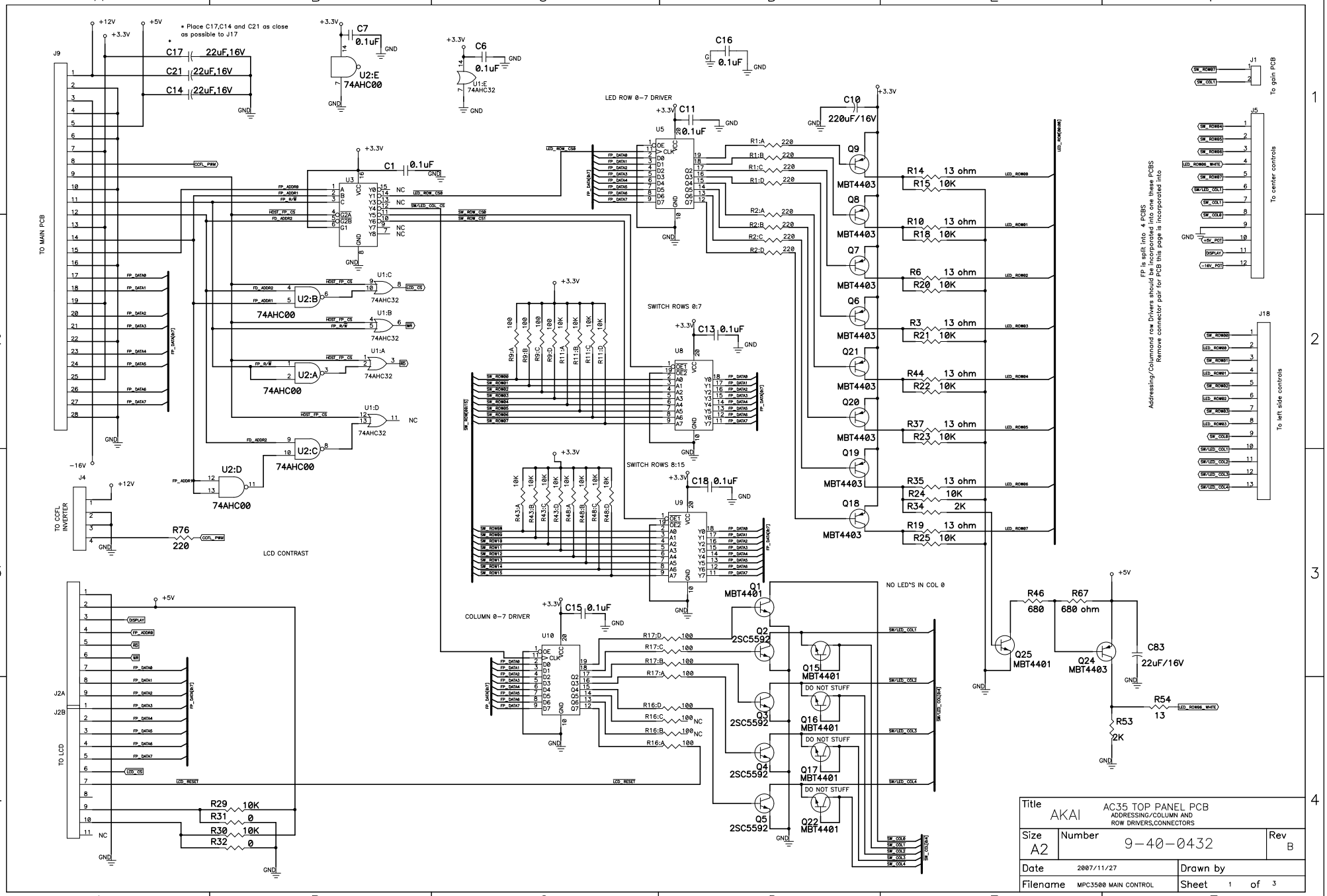
* Place C17,C14 and C21 as close as possible to J17
C17 22uF,16V
C21 22uF,16V
C14 22uF,16V
C7 0.1uF
U2:E 74AHC00
C6 0.1uF
U1:E 74AHC32
C16 0.1uF
LED ROW 0-7 DRIVER
C11 0.1uF
U5
C10 220uF/16V
C1 0.1uF
U3
U1:C 74AHC32
U2:B 74AHC00
U1:B 74AHC32
U1:A 74AHC32
U2:A 74AHC00
U1:D 74AHC32
U2:C 74AHC00
U2:D 74AHC00
SWITCH ROWS 0:7
C13 0.1uF
U8
SWITCH ROWS 8:15
C18 0.1uF
U9
COLUMN 0-7 DRIVER
C15 0.1uF
U10
NO LED'S IN COL 0
DO NOT STUFF
R76 220
LCD CONTRAST
R29 10K
R31 0
R30 10K
R32 0
R46 680
R67 680 ohm
C83 22uF/16V
R54 13
R53 2K
FP is split into 4 PCBS
Addressing/Columnad row Drivers should be incorporated into one these PCBS
Remove connector pair for PCB this page is incorporated into
To gain PCB
To center controls
To left side controls
TO MAIN PCB
TO CCFL INVERTER
TO LCD
Title AKAI AC35 TOP PANEL PCB ADDRESSING/COLUMN AND ROW DRIVERS,CONNECTORS
Size A2
Number 9-40-0432
Rev B
Date 2007/11/27
Drawn by
Filename MPC3500 MAIN CONTROL
Sheet 1 of 3

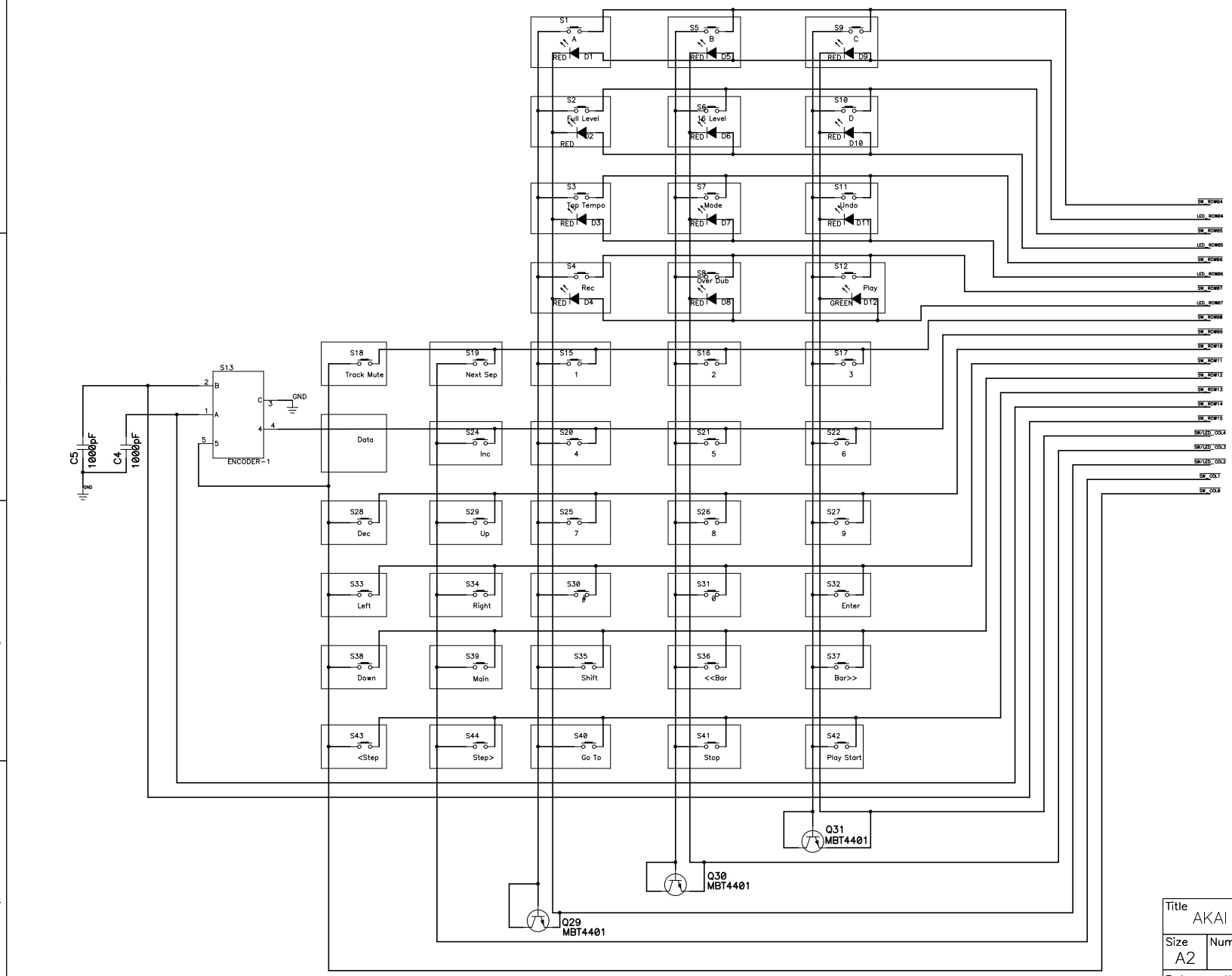

Title	AKAI	AC35 TOP PANEL PCB ADDRESSING/COLUMN AND ROW DRIVERS,CONNECTORS
Size A2	Number 9-40-0432	Rev B
Date 2007/11/27		Drawn by
Filename MPC3500 MAIN CONTROL		Sheet 2 of 3

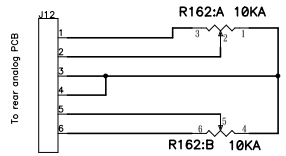

MASTER OUT VOLUME POT

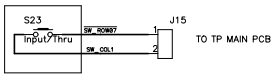

Take car route $\overline{\text{SW_ROW07}}$
and SW_COL1 so as to isolate from audio signal

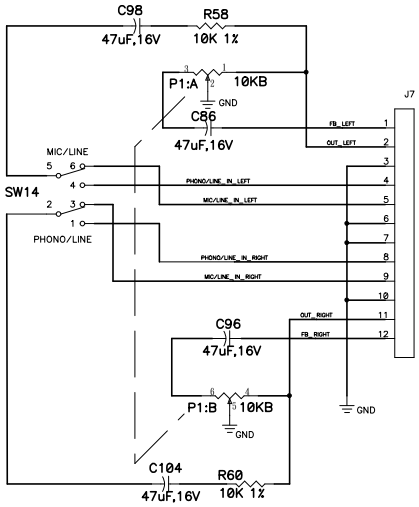

Title	AC35 TOP PANEL PCB Analog gaing knobs,input select switch input/thru switch (digital)	
AKAI		
Size A2	Number 9-40-0432	Rev B
Date 2007/11/27		Drawn by
Filename		Sheet 3 of 3

CAM Products 2000(TM):

CAM Products 2000(TM):

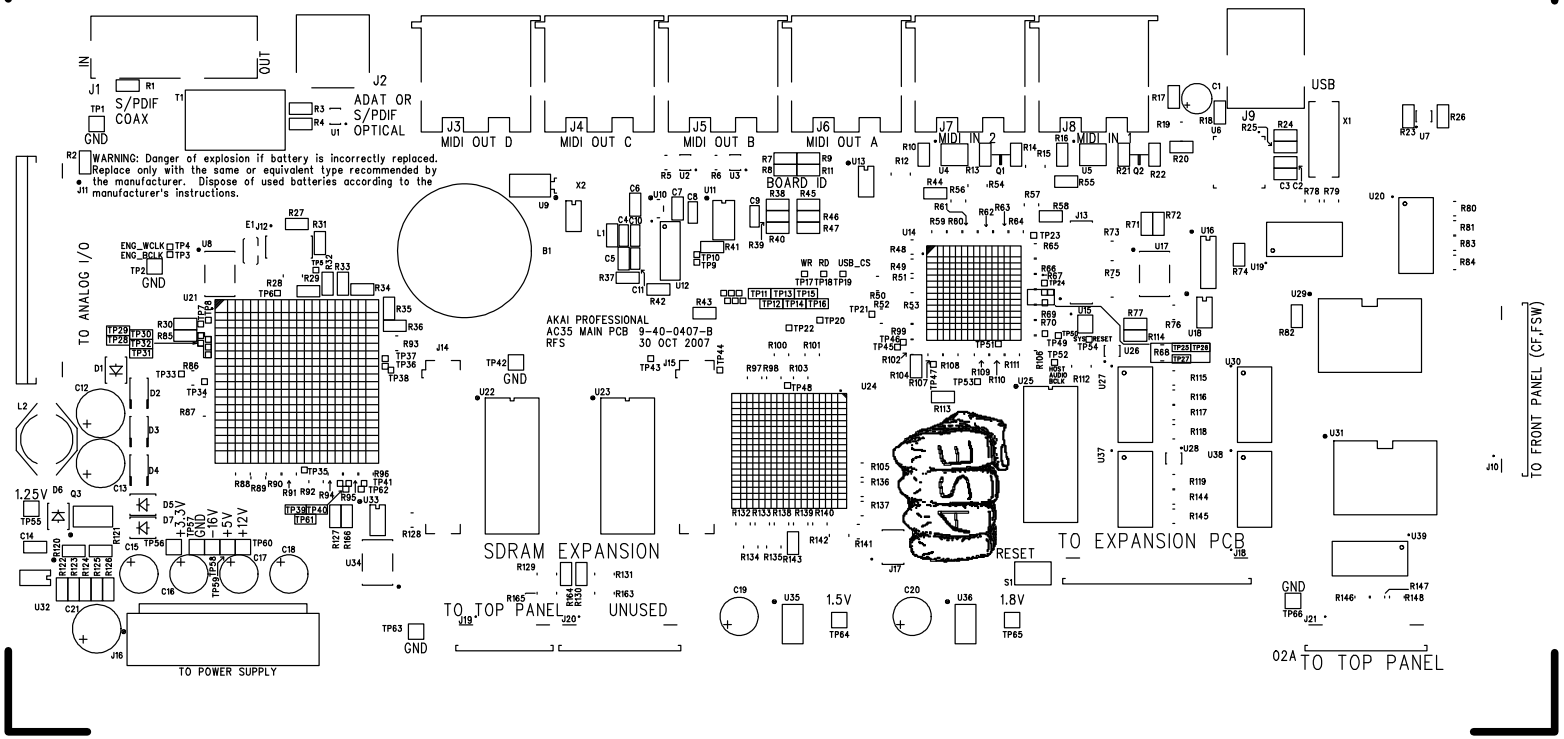

AKAI 9-40-0407-B "TOPSILK"

CAM Products 2000(TM):

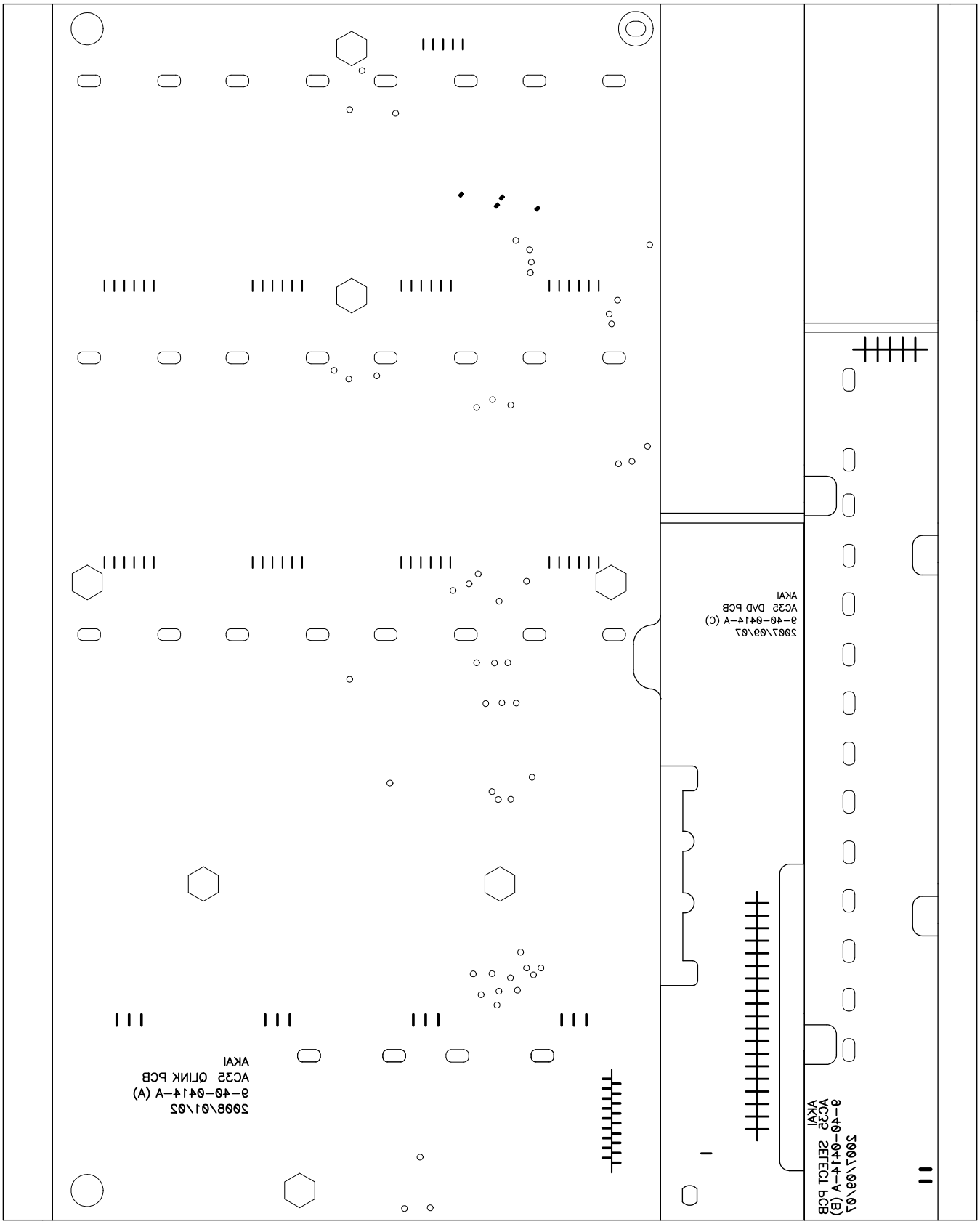

CAM Products 2000(TM):

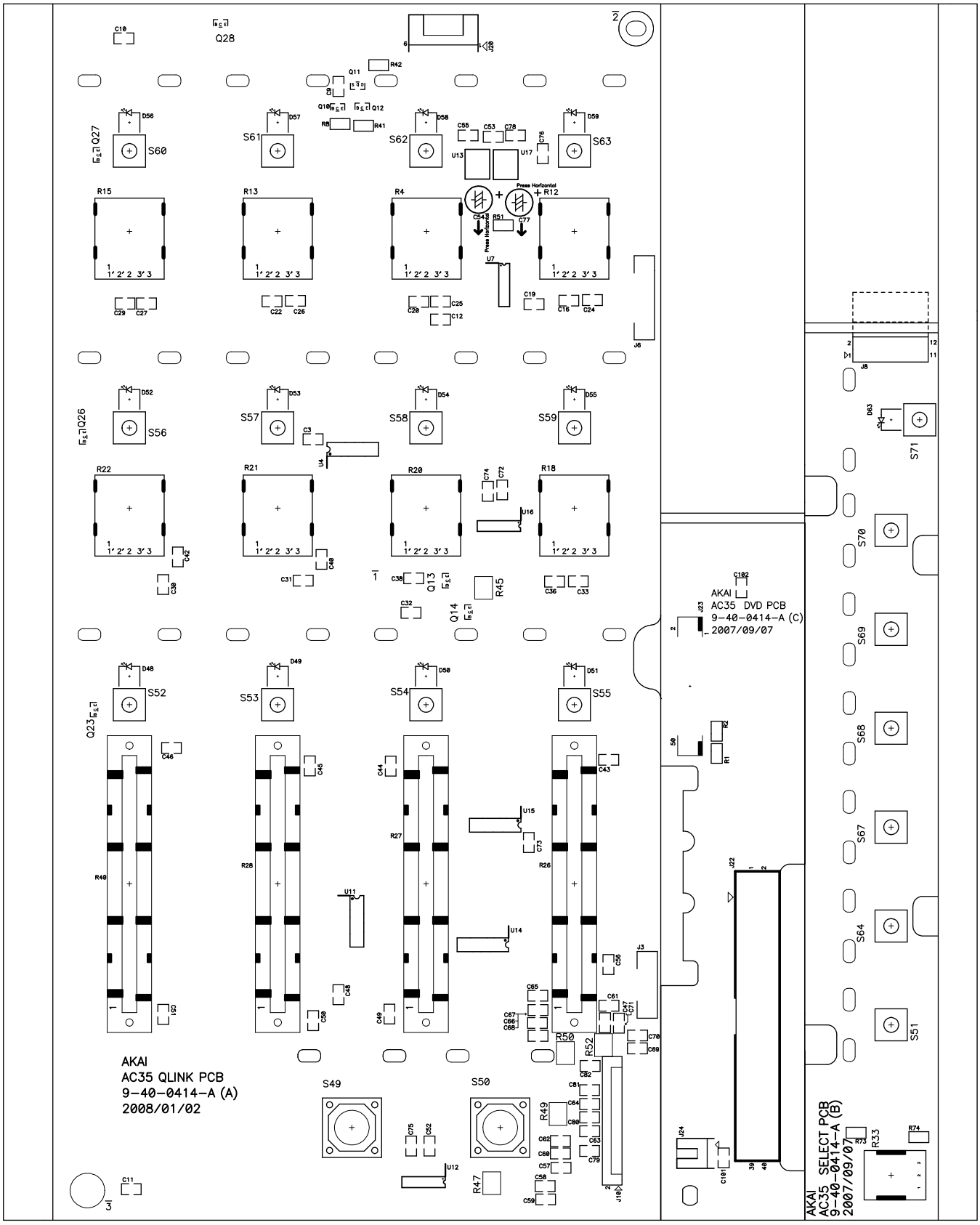

CAM Products 2000(TM):

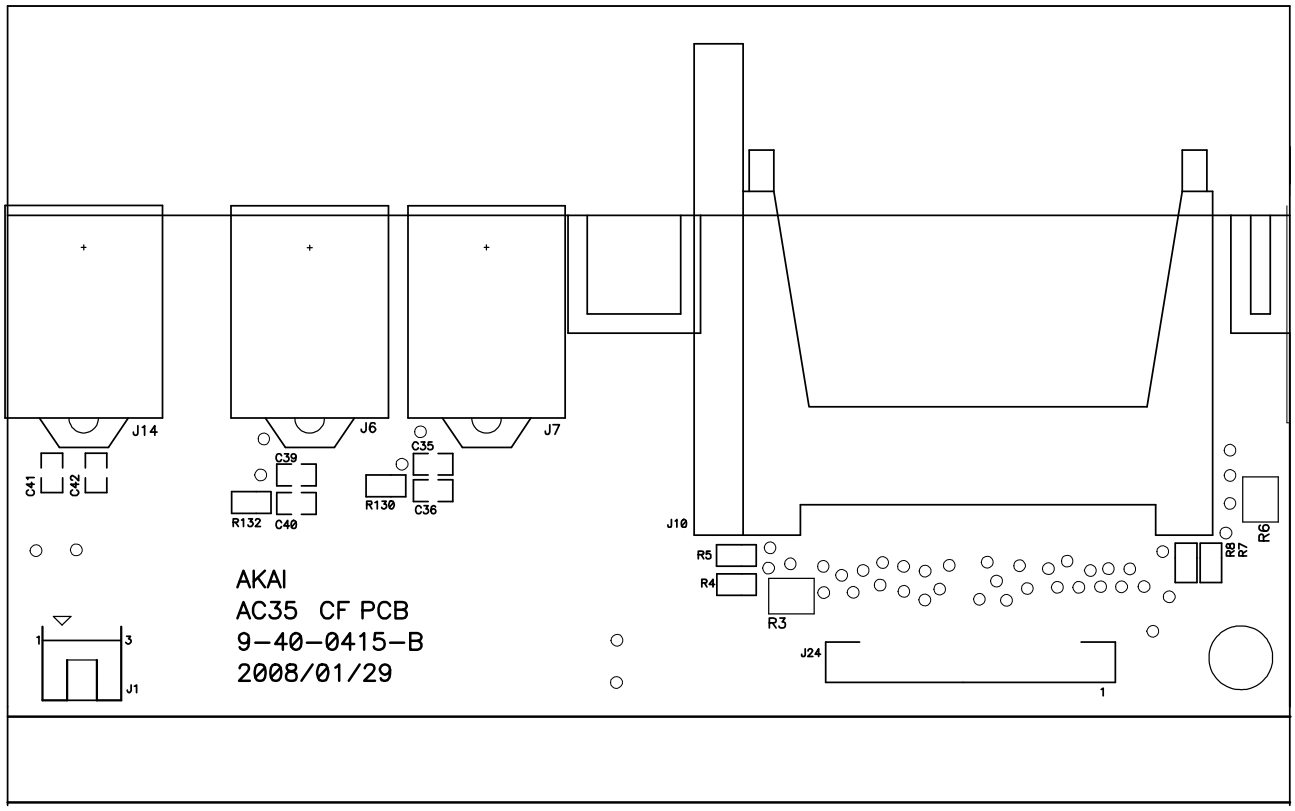

CAM Products 2000(TM):

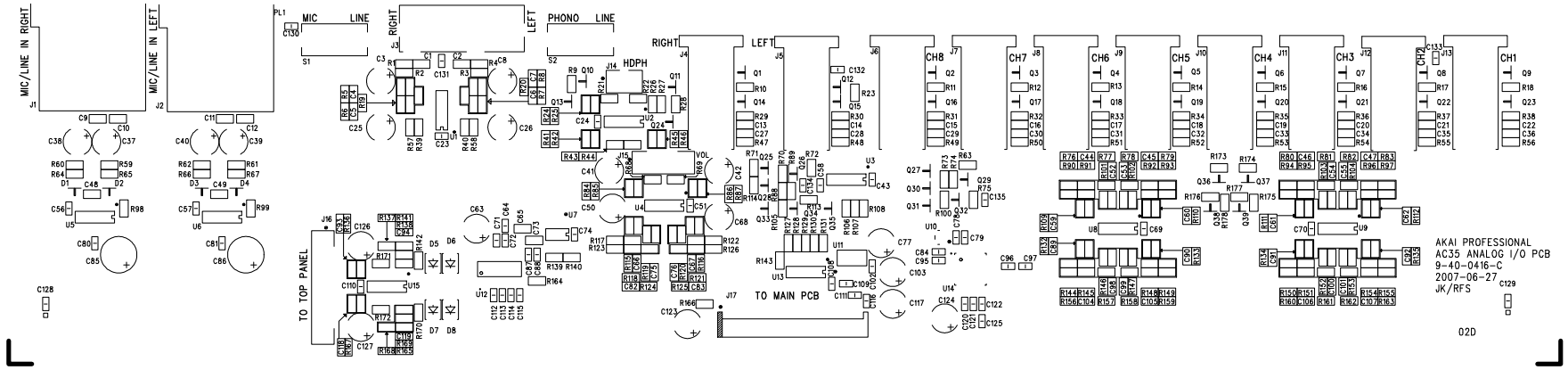

AKAI 9-40-0416-C "TOPSILK"

CAM Products 2000(TM):

CAM Products 2000(TM):

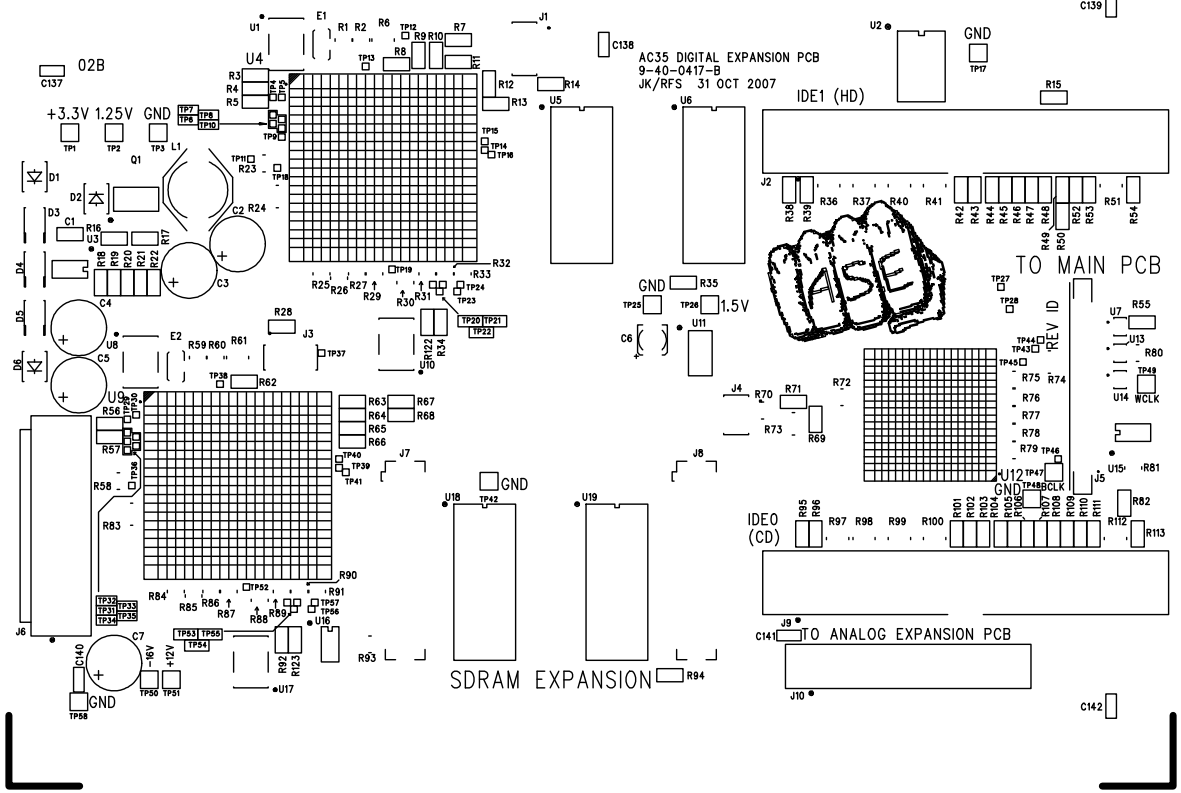

AKAI 9-40-0417-B "TOPSILK"

CAM Products 2000(TM):

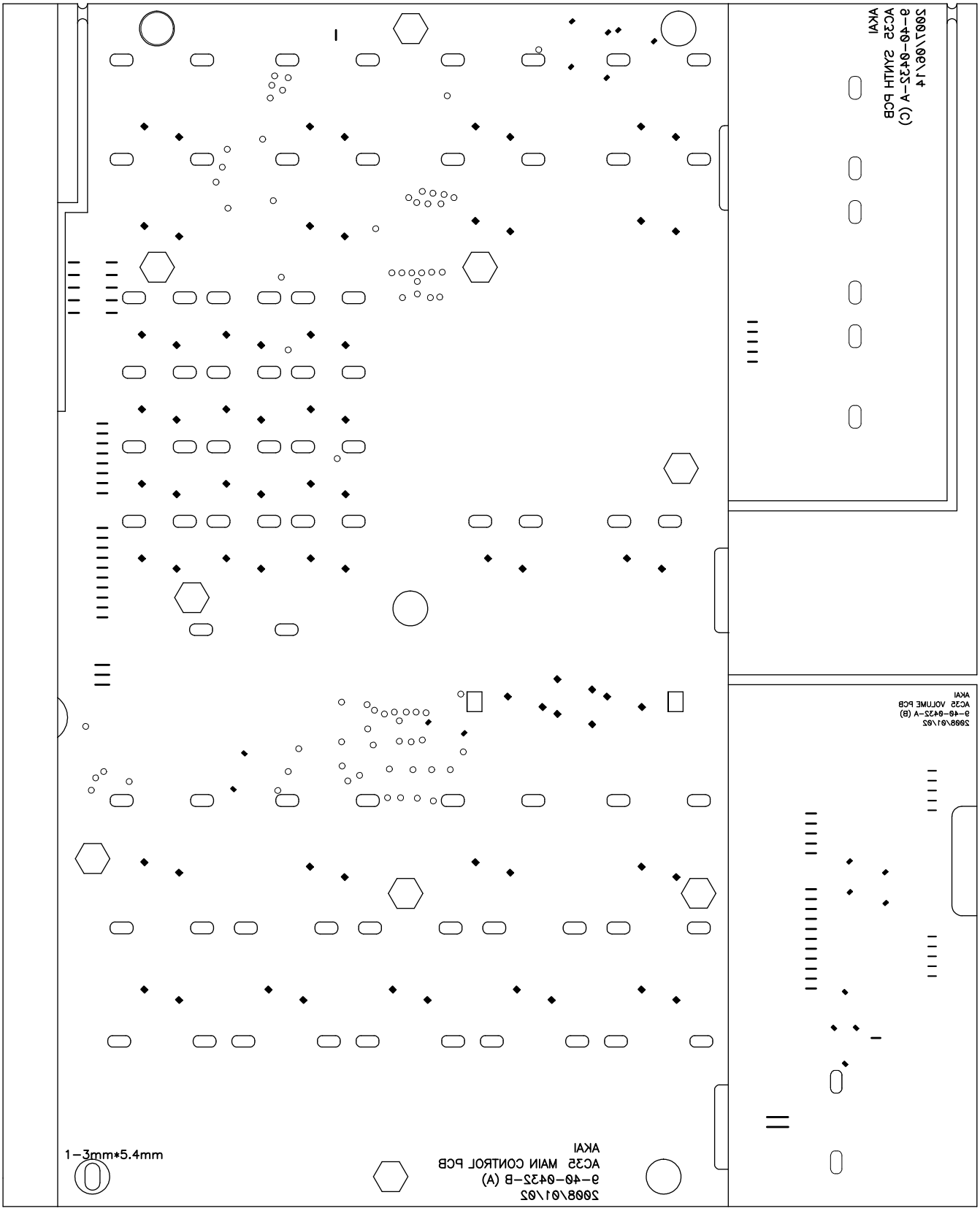
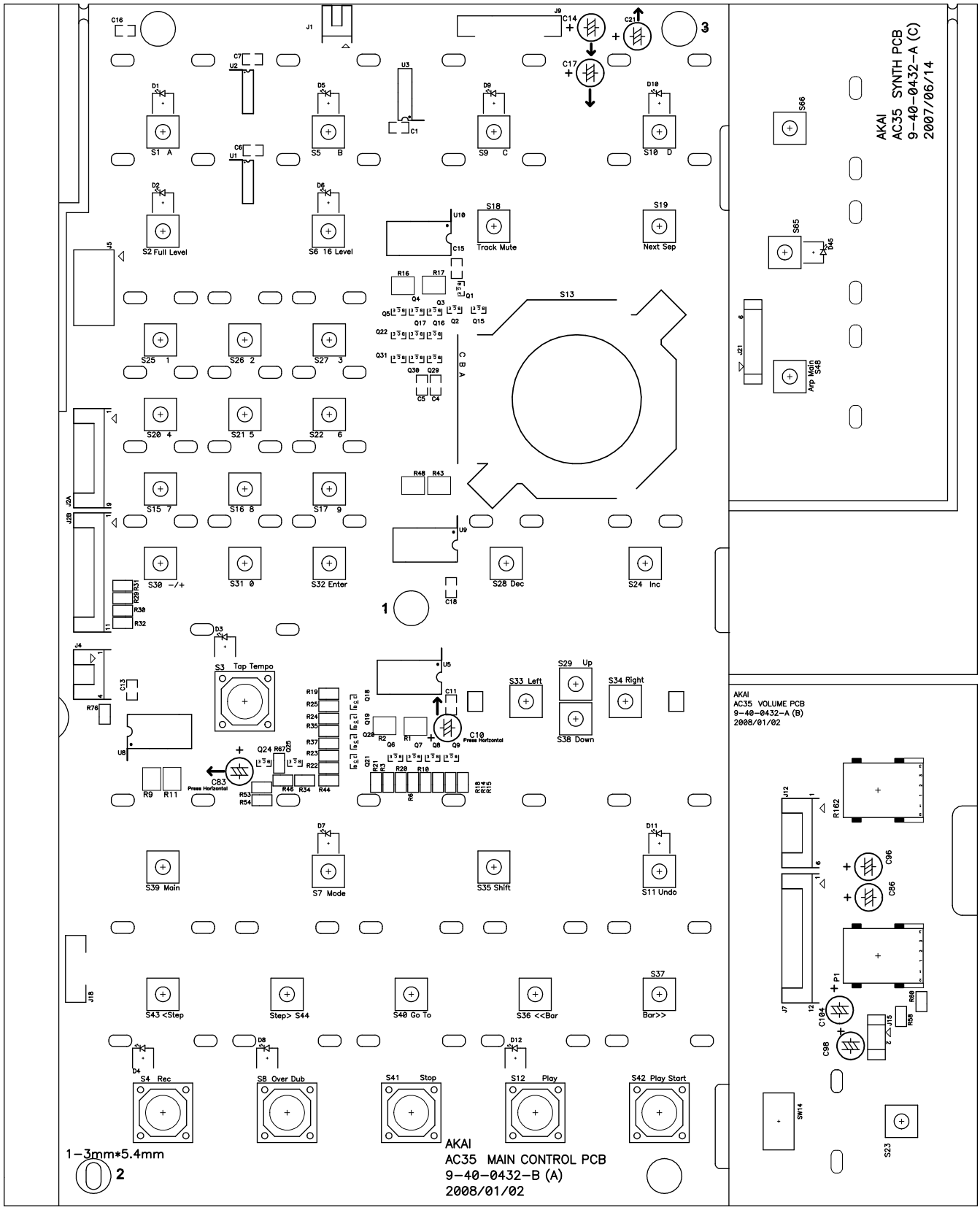
CAM Products 2000(TM):