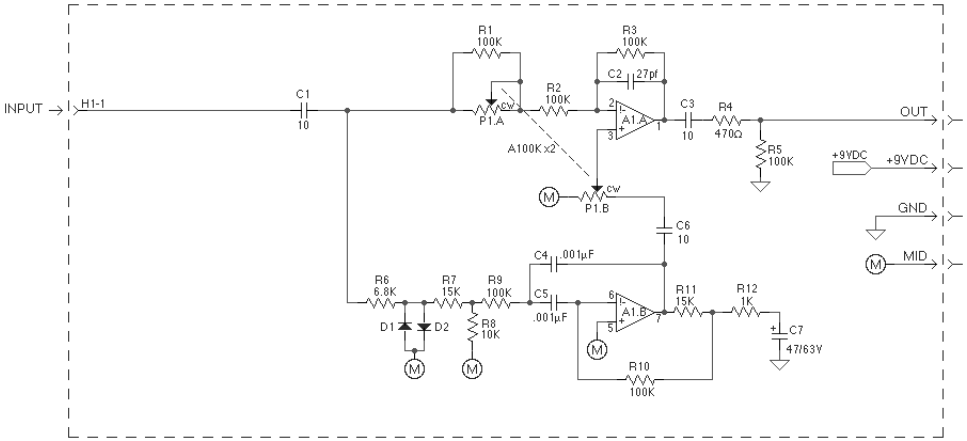

NOTES:

1. All capacitors are in microfarads except as noted.
2. All resistors values are in Ohms except as noted
3. N/U = not used
4. A1 is a type TLC2262CPdual micropower low noise op amp
5. D1 and D2 are type 1N914 (or 1N4003) type diodes

CARVIN
12340 World Trade Drive
San Diego, CA 92128
(858) 487-1600
FAX 521-6032

Mid Boost Equalizer for Bass Guitar

DRAWN BY:	John L. Murphy	DATE:	7JUL94
APPROVED:		DATE:	
PCB NO:	30-05033	REV:	-
ASSY. NO:	98-05033	REV:	-
REVISED BY:		DATE:	