Dual

1004

FUNCTIONS AND ADJUSTMENTS

Record Changer 1004

GEBRÜDER STEIDINGER · ST. GEORGEN / SCHWARZWALD

www.vinylengine.com

CONTENTS:

1. Technical Data

2. Applications and Accessories

3. Hook-up and installation

4. Operation and functions

5. Functions of individual components

6. Adjustments

7. Wiring diagram

8. General information

1. Technical Data

Power Supply:	110 / 125 volts — 150 / 160 volts — 220 / 240 volts AC
Power Frequency:	40 — 60 cycles (delivery ex factory for 50 cycles)
Power Consumption:	approx. 9 watts
Turntable Speeds:	78 — 45 — 33 — 16 rpm
Drive:	Asynchronous motor of low stray-flux
Pick-up:	Pick-up head K with wide range crystal system CDS 3 and twin sapphire assembly DN 2 for 78- and LP-records. Head, cartridge and styli replaceable.
Pick-up Impedance:	1 megohm (DC-resistance)
Weight:	4.7 kg (approx. 10 lbs.)

www.vinylengine.com

Electrical Data

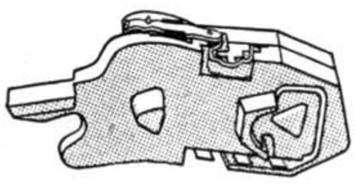

Fig. 1
DUAL Full Frequency Range
Crystal Cartridges CDS 2 - CDS 3
Frequency Response 78-Groove
Load Resistance = 1 Megohm
(1) based on constant velocity
(2) based on average industrial standard N 78
Load Resistance = .1 Megohm
(3) based on constant velocity
(4) based on average industrial standard N 78
0 db = min. 62 mV/cms-1

Fig. 2
DUAL Full Frequency Range
Crystal Cartridges CDS 2 - CDS 3
Frequency Response LP-Groove
Load Resistance = 1 Megohm
(1) based on constant velocity
(2) based on average industrial standard M 33 1/3
Load Resistance = .1 Megohm
(3) based on constant velocity
(4) based on average industrial standard M 33 1/3
0 db = min. 72 mV/cms-1

For load-impedance, frequency response and frequency range see figures 5—7. The frequency response of the DUAL cartridge CDS 3 is extremely well balanced from the lowest to the highest frequencies. The cartridge covers the entire audible range both on 78- and LP-reproduction. Not only at high frequencies is the response free of resonances but also at low frequencies the commonly encountered shuffle resonance resulting from system elasticity (static compliance) and tone arm inertia has been completely overcome by introduction of extremely low static compliance.

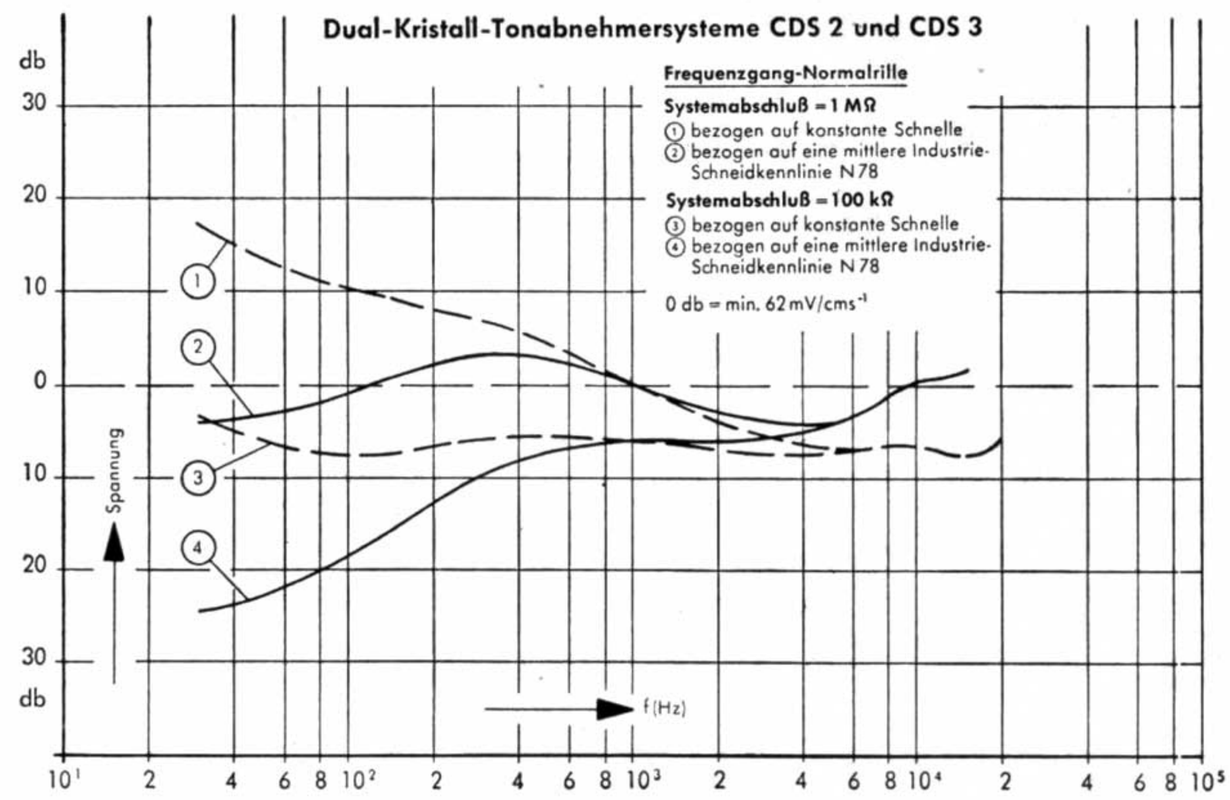

Fig. 1

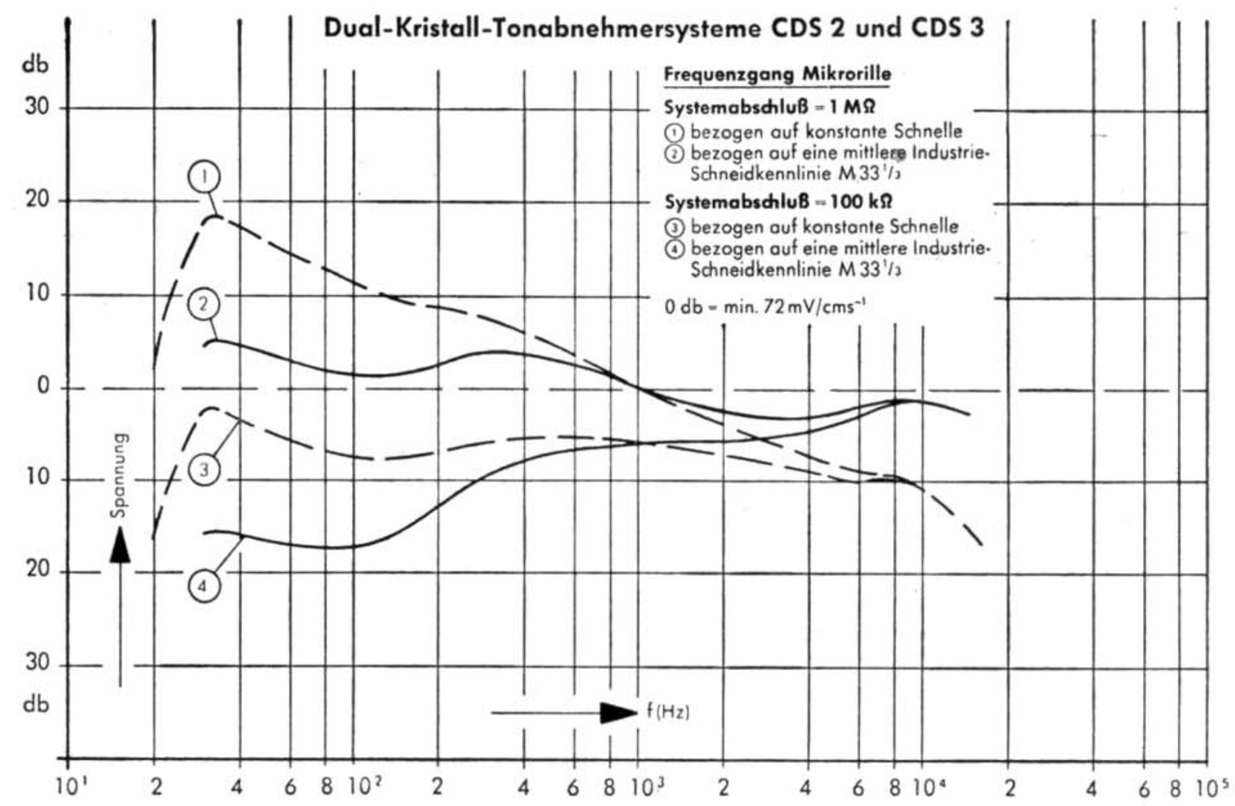

Fig. 2

This almost ideal balance of the frequency response of the DUAL CDS 3 secures unexcelled quality of natural reproduction. The complete absence of resonances even at lowest frequencies is of special importance for installations in phono consoles. The tendency to acoustical feedback in such consoles is reduced considerably due to the evenly balanced response which is free of resonance peaks.

The standard matching impedance (load impedance, i. e. amplifier input) is 0.5—1 megohm. Under 78-reproduction at 1 megohm load, a frequency response as shown in figure 5, graph 2, is obtained which covers a range from 20—20,000 cycles at ± 4 db. This frequency response is based on the average industrial recording standard N 78, and therefore shows the actual signal voltage produced with a 78-record.

Figure 5 also shows the effects of different loads on the frequency response such as for example 100,000 ohms. All graphs are based on constant velocity and average industrial recording standard N 78.

Under LP-reproduction at 1 megohm load, a frequency response as shown in figure 6, graph 2, is obtained which covers a range from 20—16,000 cycles at ± 4 db. This frequency response is based on the average industrial recording standard M 33 1/3, and therefore shows the actual signal voltage produced with an LP-record. The change in frequency response at 100,000 ohms load is shown in graph 4.
For ultimate perfection of the quality of reproduction, an improvement of the response of the DUAL wide range crystal cartridge CDS 3 can be achieved by the introduction of an RC-network.

This results in a still better matching to the recording standards of 78- and LP-records with a still more evenly balanced frequency response and increased quality of reproduction.

www.vinylengine.com

With RC-equalization, 78-reproduction will be possible from 20—20,000 cycles at ± 3 db. The diagram of the RC-equalizer and the resulting frequency responses are shown in figure 7.

Sensitivity at 1000 cycles:

under 1 megohm load:

78 = min. 62 mV/cms-1

LP = min. 72 mV/cms-1

with RC-network:

78 = min. 22 mV/cms-1

LP = min. 72 mV/cms-1

Compliance:

The static compliance

at 78-sapphire: max. 1.2 g / 60 μ

at LP-sapphire: max. 2.0 g / 60 μ

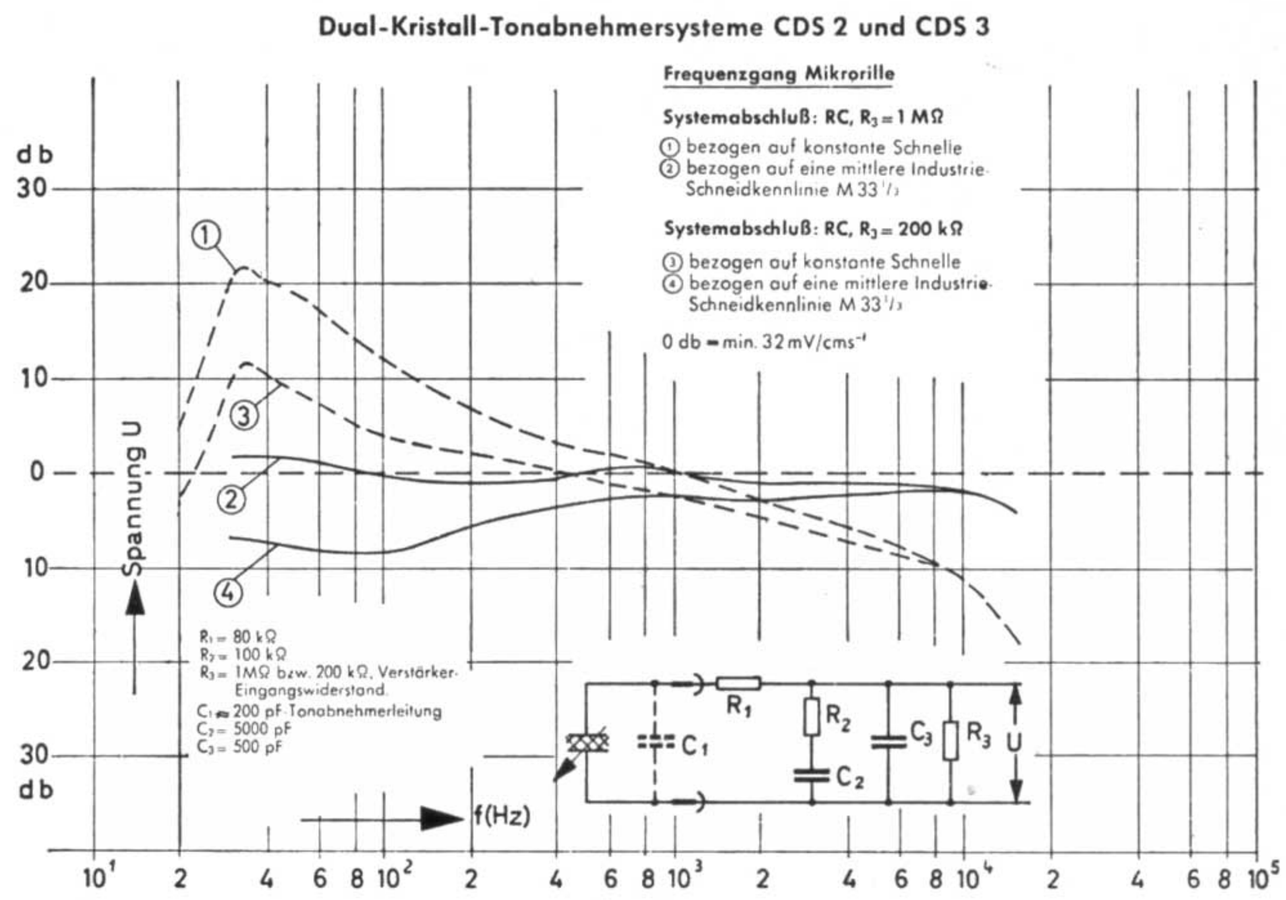

Fig. 3

Fig. 3
DUAL Full Frequency Range
Crystal Cartridges CDS 2 - CDS 3
Frequency Response LP-Groove
(1) based on constant velocity
(2) based on average industrial standard M 33 1/3
Load resistance: RC, R_3 = .2 Megohm
(3) based on constant velocity
(4) based on average industrial standard M 33 1/3
0 db = min. 32 mV/cms-1
R_1 = .08 Megohm
R_2 = .1 Megohm
R_3 = 1 Megohm resp. .2 Megohm Amplifier Input-Impedance
C_1 = 200 pF Pick-up lead
C_2 = 5000 pF
C_3 = 500 pF

2. Applications and Accessories:

The record changer allows reproduction of all standard records at 78, 45, 33 and 16 rpm in connection with a radio or amplifier. All sizes of records between 17—30 cm (7—12") can be used.

Functions:

As **Record Changer** for records with 7 mm centre hole, using the changing spindle. Either 78 or LP-records of uniform speeds can be intermixed regardgardless of diameters.

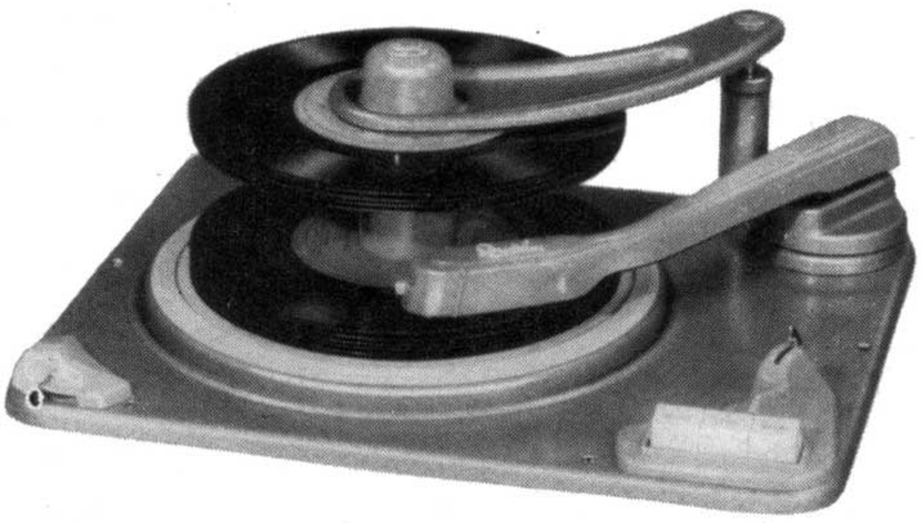

As **Record Changer** for records witch 38 mm centre holes, using the spindle AS 3.

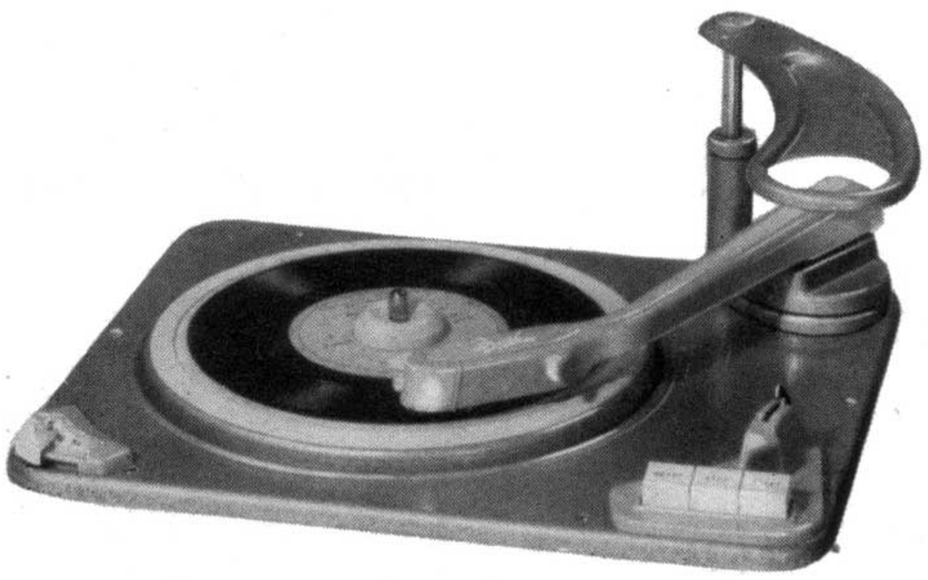

As **Automatic Single Player** for records of any of the four standard speeds, 78 or LP, with 7 mm or 38 mm centre holes, using the short single play spindle and the adapter for 38 mm centre hole records.

www.vinylengine.com

Accessories :

Pick-up head K with

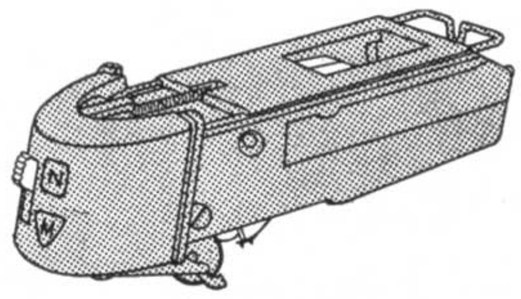

Cartridge CDS 3 and

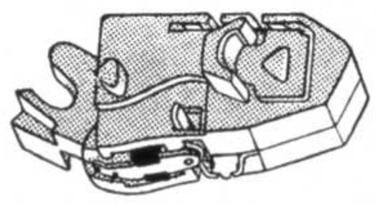

Twin Sapphire Assembly DN 2

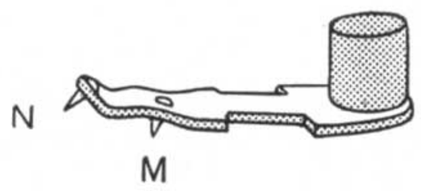

Thin Centre Spindle	12 A - U 182
Short Spindle	11 A - 221
7" Adapter	12 B - 208
Spring Suspension	12 A - U 252
Large Centre Spindle AS 3	13A - Ausf. B 2 (optional)

Pick-up heads with diamond styli can be supplied on special request. See list S 457 for standard and special pick-up heads, cartridges and styli.

3. Hook-up and Installation:

Voltage Selector

All units are supplied by the factory for 220 volts. Adjustment to other voltages can easily be made by inserting a coin into the voltage selector which can be reached through one of the holes in the turntable after the rubber mat has been lifted.

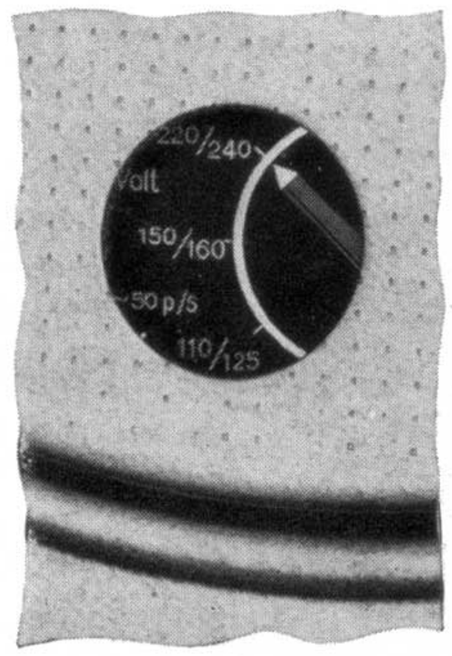

Connection of Pick-up

A red and a black plug are provided for connecting the record changer to a radio or amplifier (red plug to "hot" input). The third green plug must be connected to the ground terminal of the radio or amplifier.

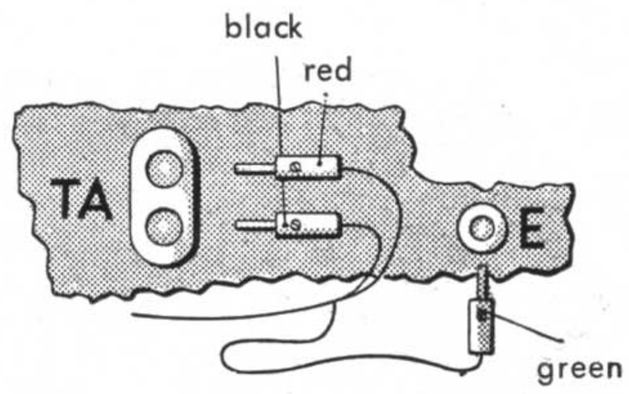

Spring Suspension

The spring suspensions, supplied with each record changer, must be used in order to avoid inproper indexing and acoustical feedback. It is important not to cancel the effectiveness of the spring suspensions by tightly pulled cables.

For the same reason it is essential to remove the transit screws on both sides of the changer if supplied installed in a cabinet. A template with all measurements of the cut-out for installation of the changer is supplied with each unit.

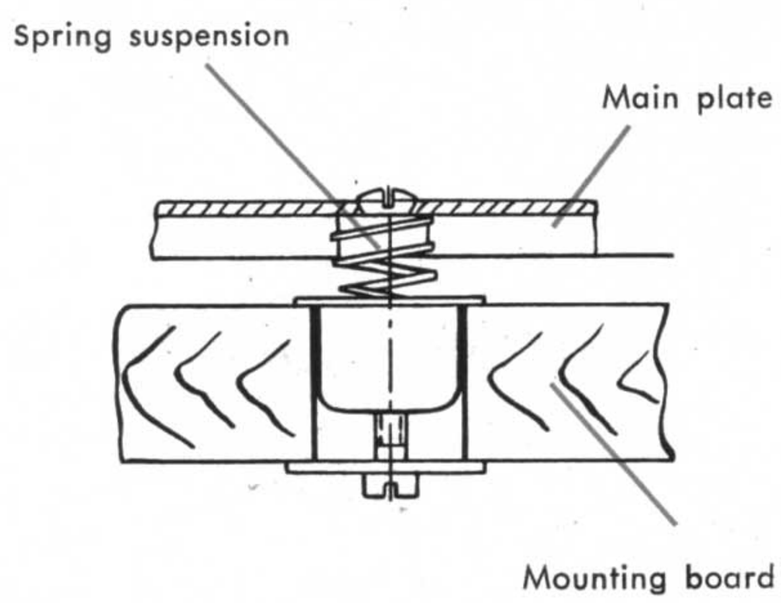

www.vinylengine.com

4. Operation and Functions

After installation and connection, the record changer is ready for operation, and can be started by pressing the start button. When loading the thin centre spindle it should be observed that only records of uniform speed and either 78 or LP are used. Furthermore it is necessary to select the required speed with the speed selector and the required stylus with the stylus selector at the pick-up head before starting the changer.

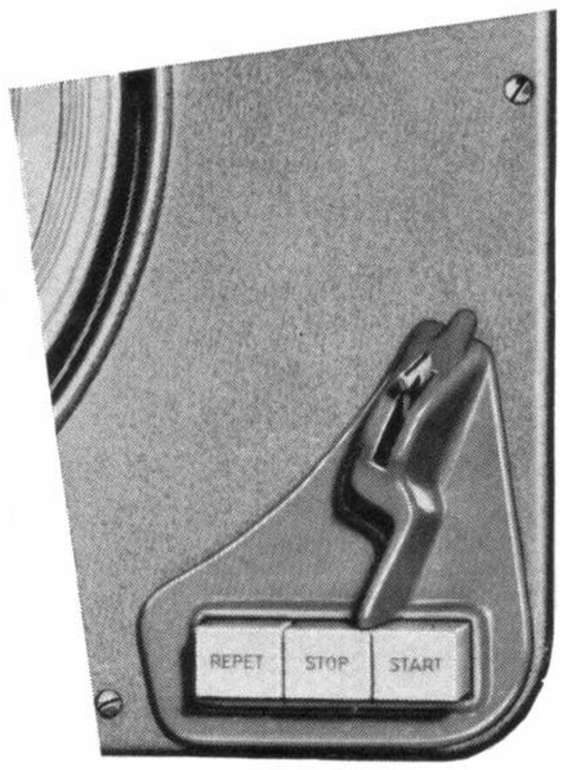

The tone arm is controlled automatically, indexing the record size, and after completion of play returning and locking to its stand. This cycle is started by pressing the start button.

The normal playing cycle can be extended by operating the repeat button in order to repeat a playing record. Repeating of records is not possible when either operated as a single player or when playing the last of a stack of records. The playing cycle can be immediately interrupted, with the tone arm returning to its stand, by pressing the stop button. The motor will then shut itself off automatically. An immediate interruption of play, and change over to the next record, can be achieved by pressing the start button once again.

Besides the normal operation the following variations are possible:

a) Pressing both the start and the repeat button at the same time:
A record already on the turntable will be played before the following record is dropped.

b) Pressing both the stop and the repeat button at the same time:
The play will be interrupted, and the tone arm will return to its stand without dropping the following record.

c) When interrupting the play and later starting over, stop and repeat as well as start and repeat will always be operated at the same time. This avoids dropping of the following record, and the same interrupted record will be played over again.

The design of the tone arm is such, that no damage can occur, even if it should accidentally land on the rubber mat, due to erroneous pressing of start and repeat when beginning with a new stack of records. (The tone arm can be "called back" by pressing either the stop or the start button.

In order to level the records on the thin centre spindle horizontally, the overarm must be placed in position. This is not necessary when playing single records, and the overarm may then be lifted and swung to the extreme right.

www.vinylengine.com

5. Functions of the individual components

Both the turntable and the entire mechanismus are driven by a sturdy asynchronous motor of low stray-flux. The speed of the motor at normal operating voltage is constant within ± 10 %. Deviations occur in direct proportion to changes in the frequency of the power supply.

The motor pulley Pos. 107 on the shaft of the motor is designed for operation of the changer on 50 cycles. For other frequencies, such as 40 or 60 cycles, special pulleys can be obtained from the factory.

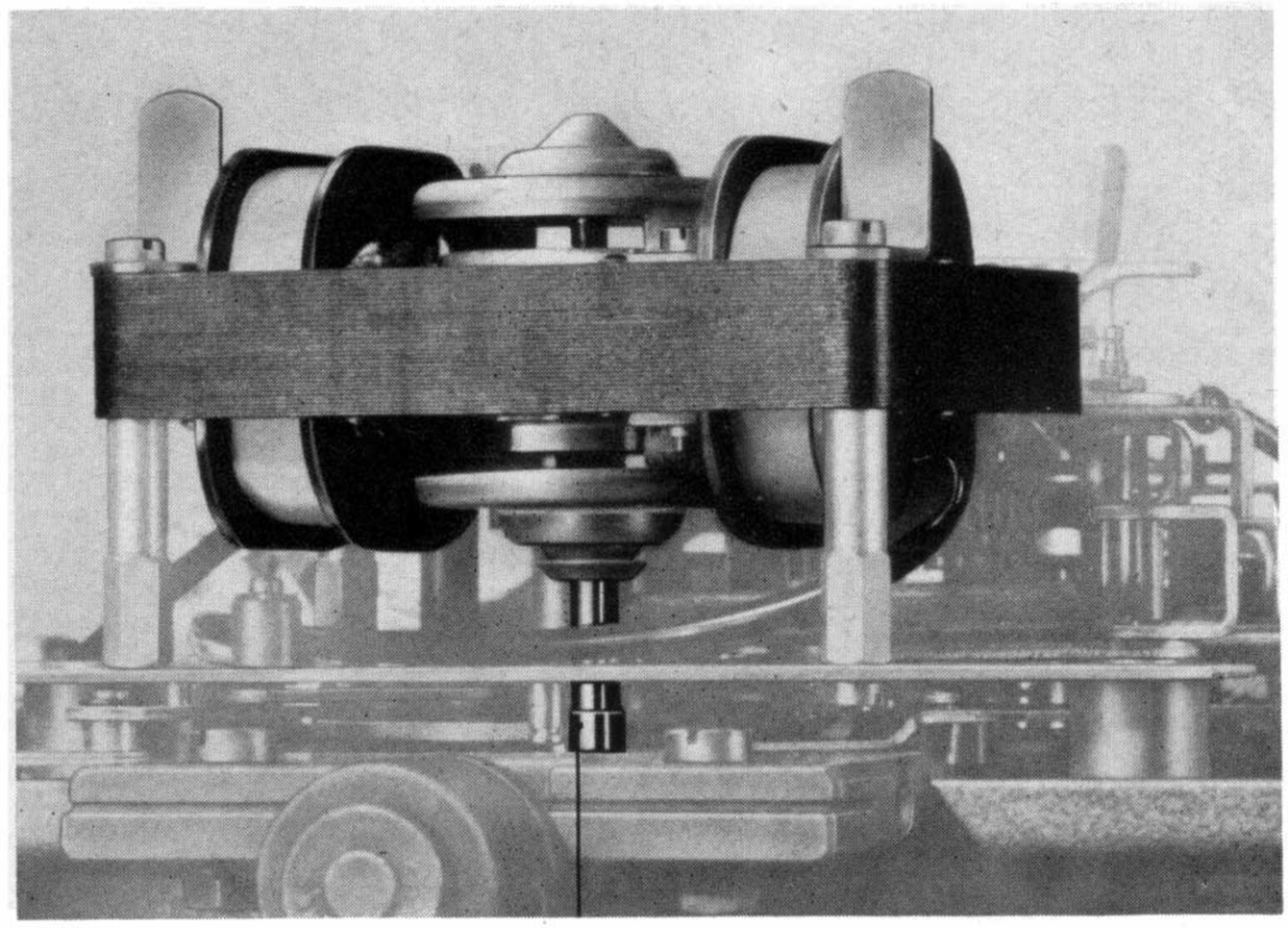

In case of exchanging the pulley, it is of utmost importance not to bend the motor shaft, since otherwise a rumble in the reproduction might result.

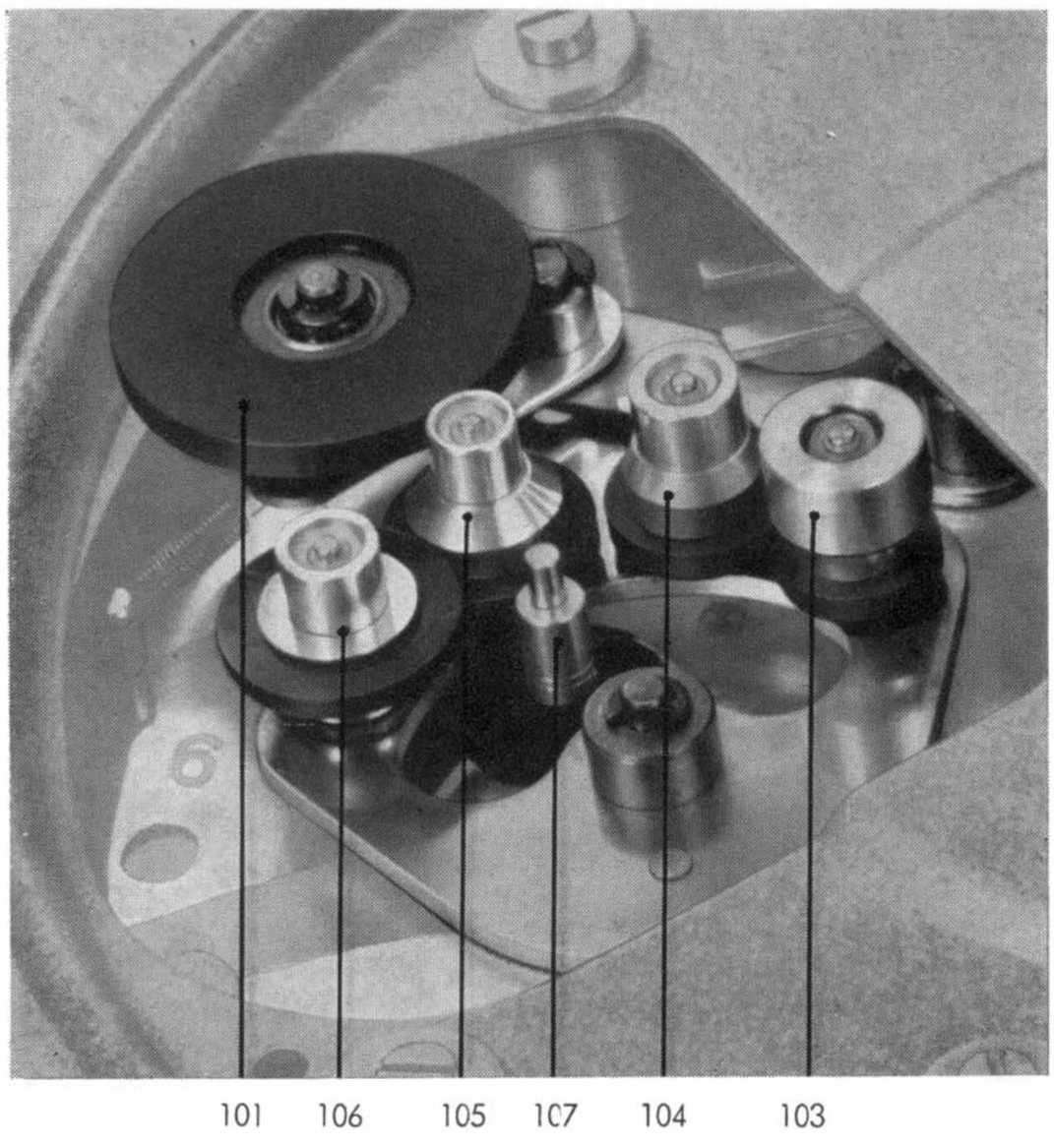

Friction Wheel Drive

and 106 become completely disengaged in the neutral position.

In order to avoid any slipping in the drive, it is absolutely essential to keep grease and oil away from the friction wheels. Otherwise a wow due to uneven turntable speed might result.

Turntable Drive

A friction wheel drive for the four speeds of 78, 45, 33 and 16 rpm is located under the turntable. The driving rims of the rubber wheels are polished concentrically around their centres of rotation in order to guarantee a rumble free performance.

When an exchange of the intermediate wheels should become necessary always the complete wheels should be replaced, and not merely the rubber rings. The drive wheel Pos. 101 automatically disengages in rest position, and thus pressure marks on the rubber and resulting uneven drive are avoided.

There is a neutral position on the speed selector for transit purposes. All intermediate wheels Pos. 103, 104, 105

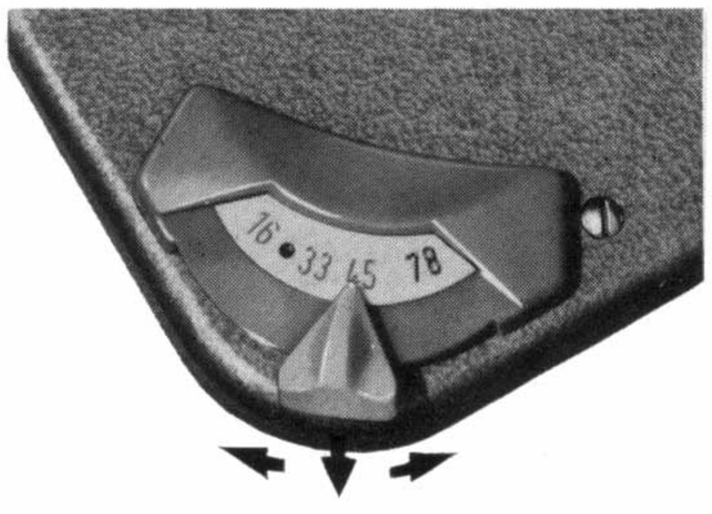

www.vinylengine.com

Mechanical Drive

The cam set (Pos. 37) is driven by the motor through the drive wheel and intermediate wheel (Pos. 17 and 29) while the rubber surface of the drive wheel is engaged to the motor shaft. The cam set which controls the movements of the tonearm is released by the engage lever (Pos. 7) which disengages upon pressing of the start button through start link (Pos. 53), meanwhile the engage bracket (Pos. 4) will at the same time press the drive wheel against the motor shaft.

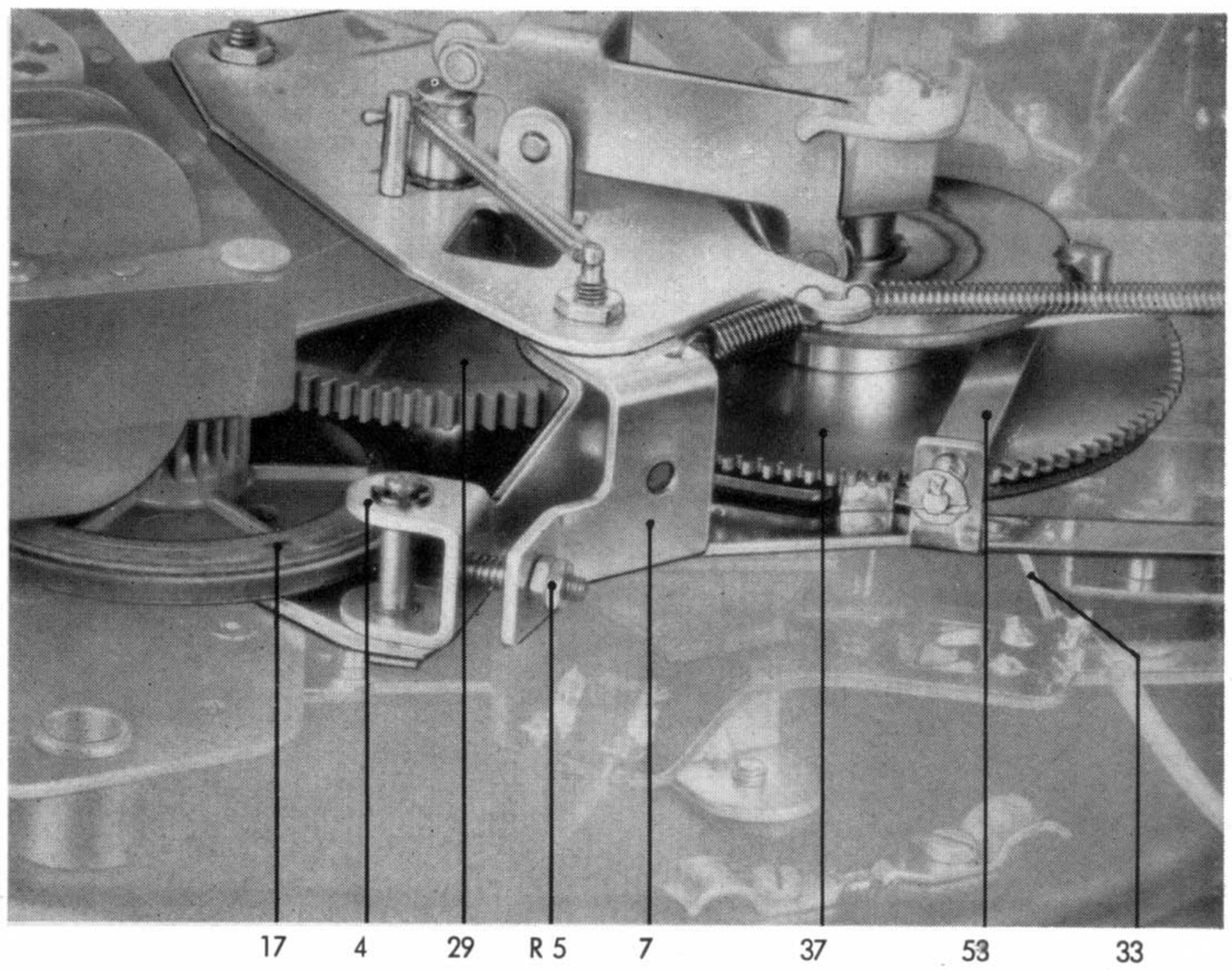

The distance between the rubber surface of the drive wheel and the motor shaft in 0-position is critical. This distance should be approx. 0.6 mm for trouble free drive and proper disengagement after a 360° cycle of the cam set.

Tone Arm Drive

The movements of the tone arm for measuring of record size are activated by the rotation of the cam set (Pos. 37). The tone arm is driven by the main rail (Pos. 16) the feeler arm (Pos. 21), the lift lever (Pos. 22) and the lift stud (Pos. 13). By the movement of the main rail, the clutch (Pos. 15 and 20) will be closed through lift lever and lift stud, and the tone arm will be raised.

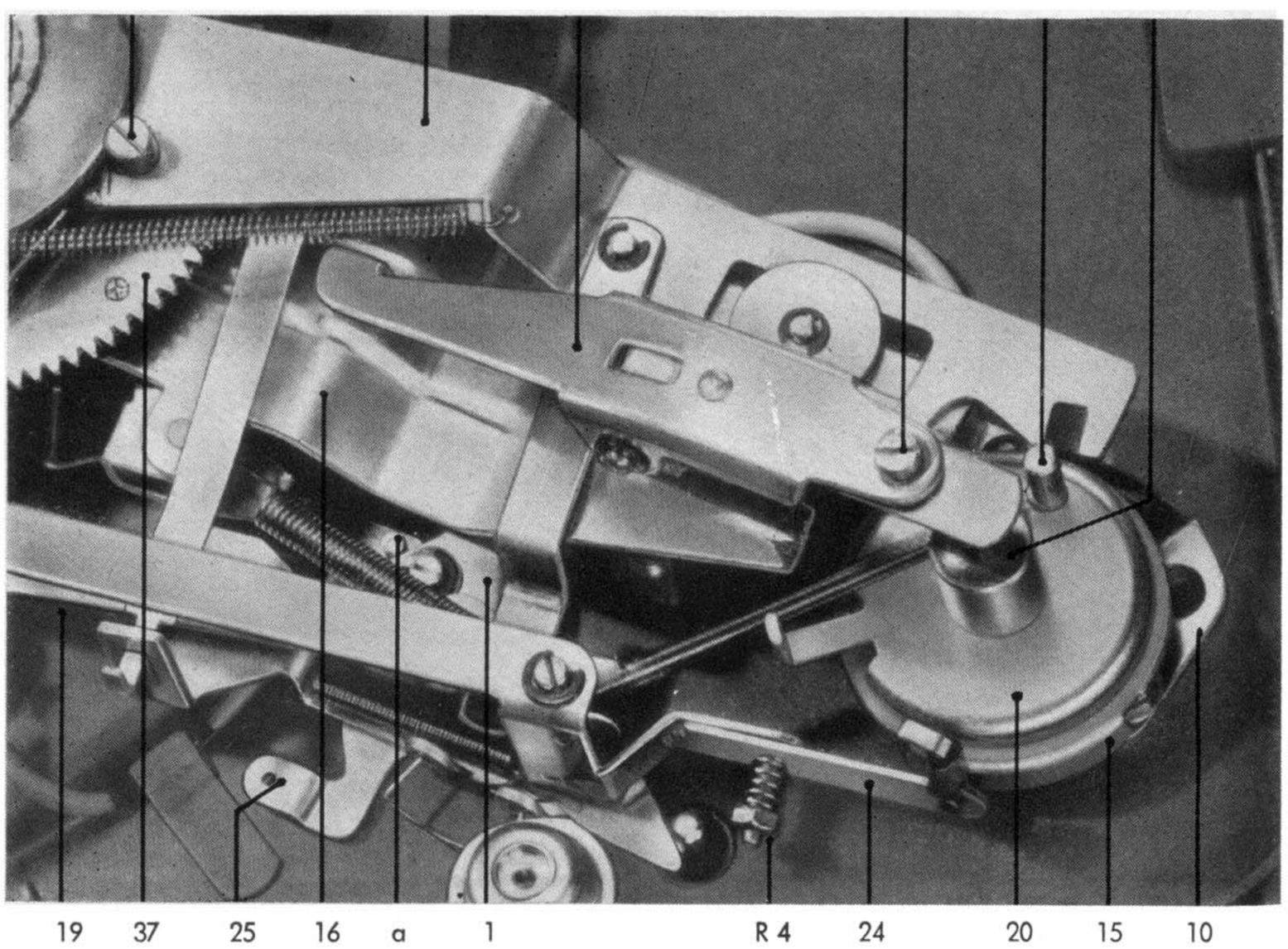

At the same time the indexing system in the pick-up head is triggered. The horizontal movement of the tone arm will then be activated by the feeler arm (Pos. 21) which is also driven by the cam set. When reaching the edge of the record and releasing the indexing device, the clutch will be disengaged through the lever system inside the tone arm and tone arm base. The tone arm can then track the record freely. While indexing the record size, the movement of the tone arm is damped by the tone arm brake (Pos. 24) which presses against the clutch housing (Pos. 20).

www.vinylengine.com

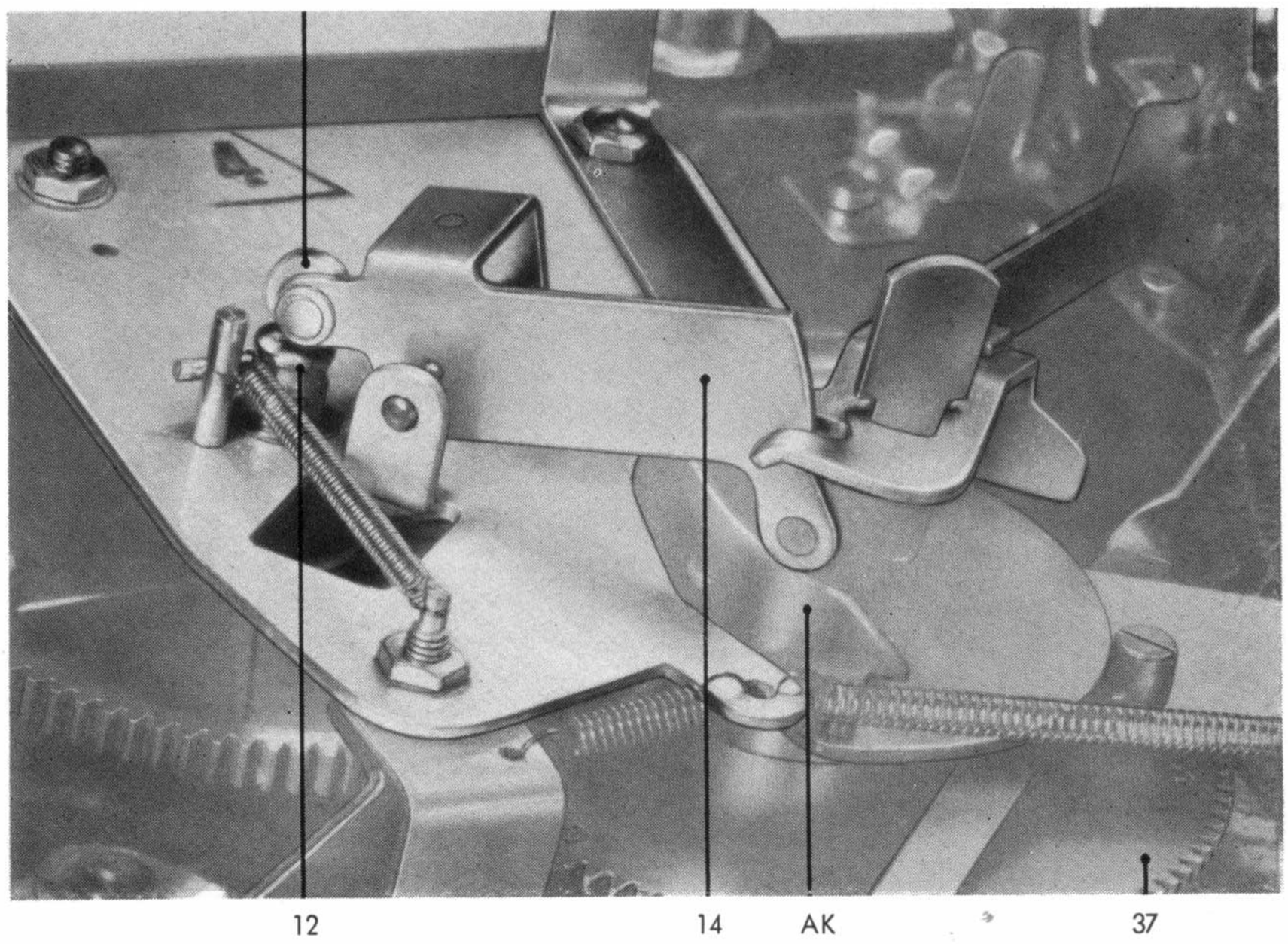

Changing of Records

For loading and automatic changing of records either the thin centre spindle for 7 mm centre holes or the large centre spindle AS 3 for 38 mm centre holes is to be used. The changing of records is initiated also by the rotation of the cam set (Pos. 37), the cam of which (Pos. AK) drives the dropping lever (Pos. 14) and the change bolt (Pos. 12). The latter shaft in turn activates the changing spindle to drop a record.

The cam of the cam disk is of such shape that the record will be dropped while the tone arm is over its rest position, i. e. out of the range of 12" records.

Severe stressing of records' centre holes is avoided by an ingenious device, the so-called "record lift" which lowers the remaining stack of records slowly to their rest position. This action is also controlled by the cam set in connection with the lever system of the changing spindle.

www.vinylengine.com

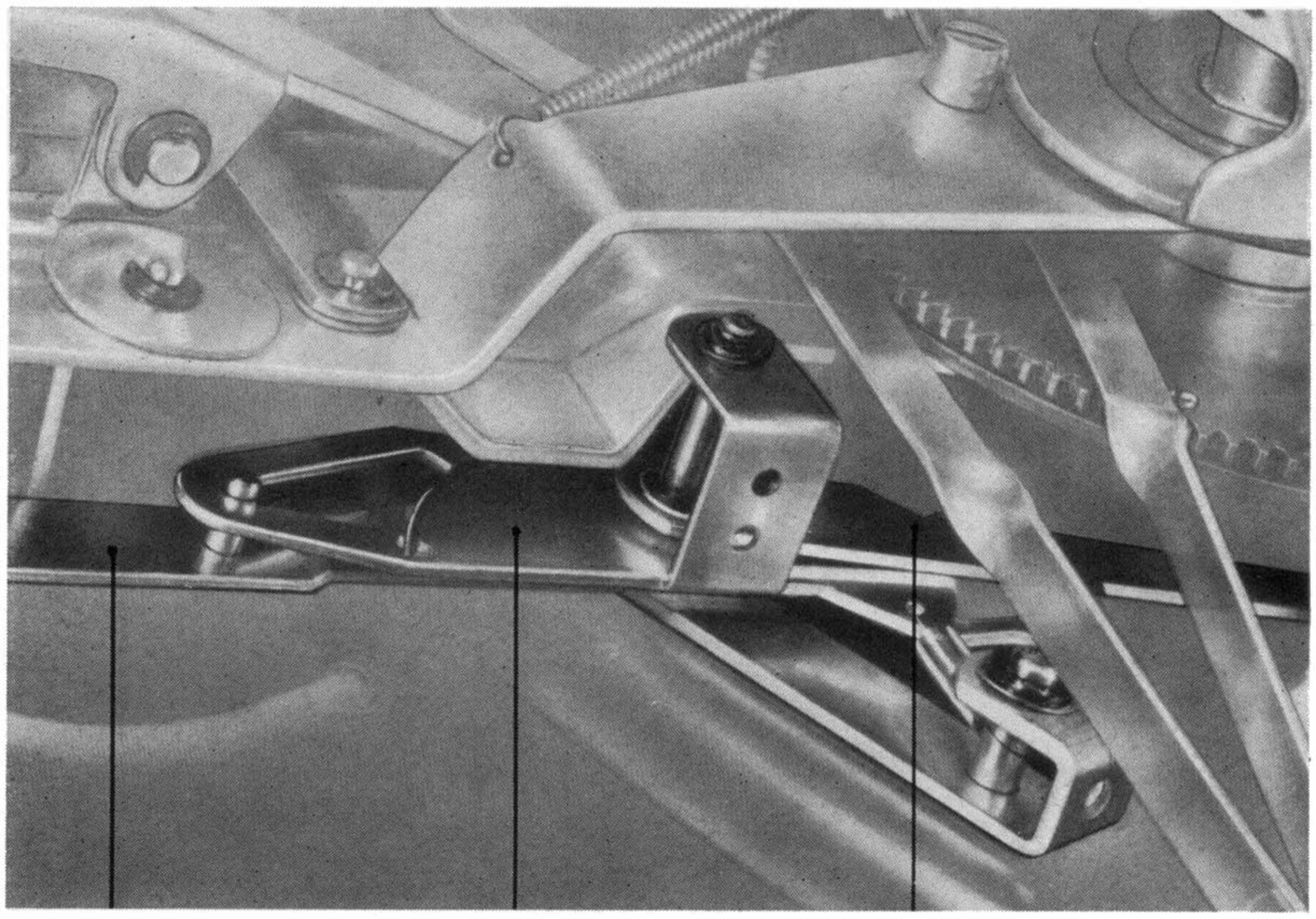

Automatic Shut-off Device

Shut-Off or Begin of Changing Cycle

Either the changing cycle after playing of a record or the final shut-off after playing of a complete stack of records is activated by the shut-off cam and the shut-off lever (Pos. 35).

The shut-off lever is connected to a pull lever through a fricton drive (Pos. 35 a and 35 b), and is moved towards the shut-off cam with the tracking speed of the tone arm. As long as this speed is maintained, the rotating cam will keep on bouncing off the shut-off lever.

The speed of the radial movement increases however as soon as the run-out groove of a record is reached, and the shut-off lever will then be caught and pulled by the rotating cam. This in turn will operate the switch lever (Pos. 33) and start the changing cycle or shut off the unit.

Begin of either a new changing cycle or shutting off of the unit is governed by the position of the overarm which controls the shut-off switch (Pos. 25).

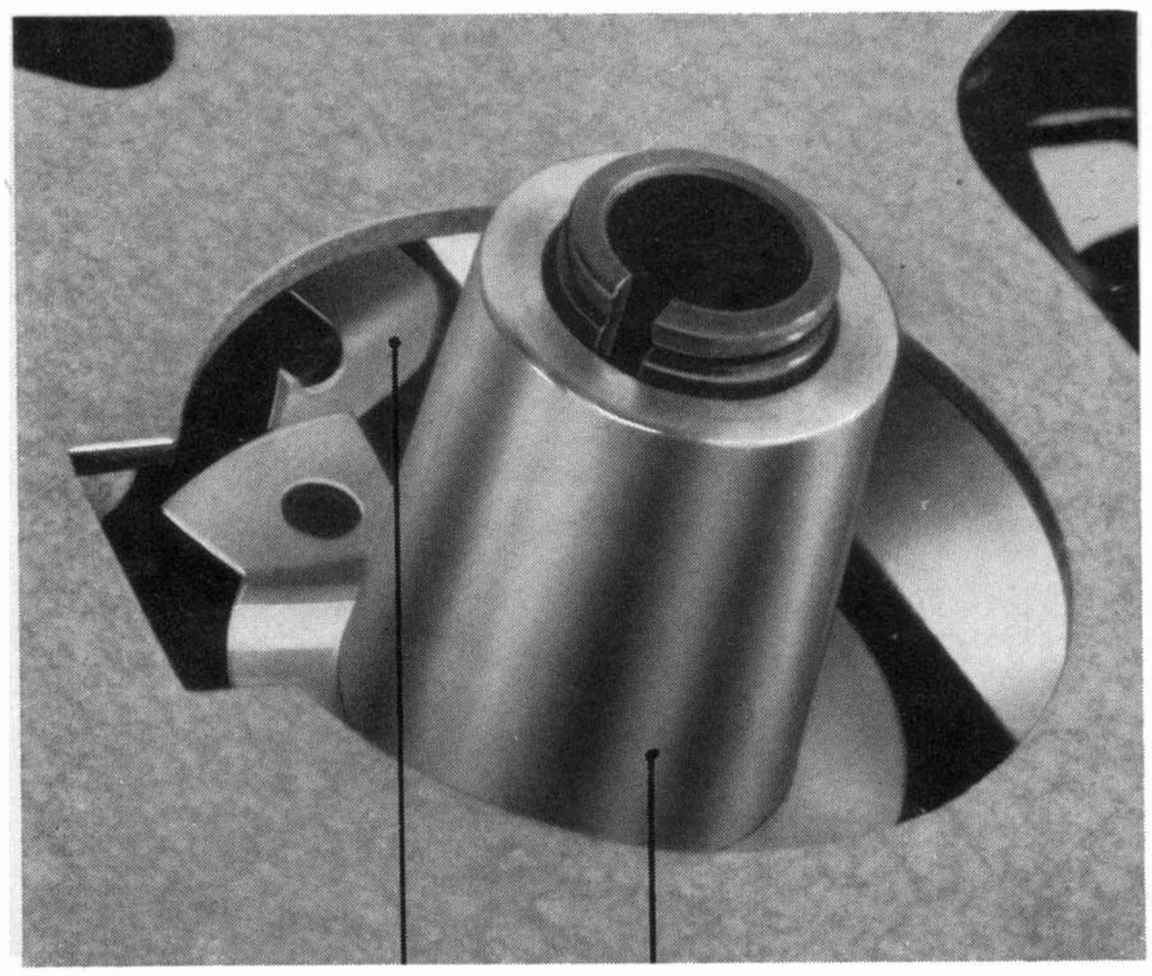

Shut-off Cam
(Visible after removal of turntable)

www.vinylengine.com

Pos. 50

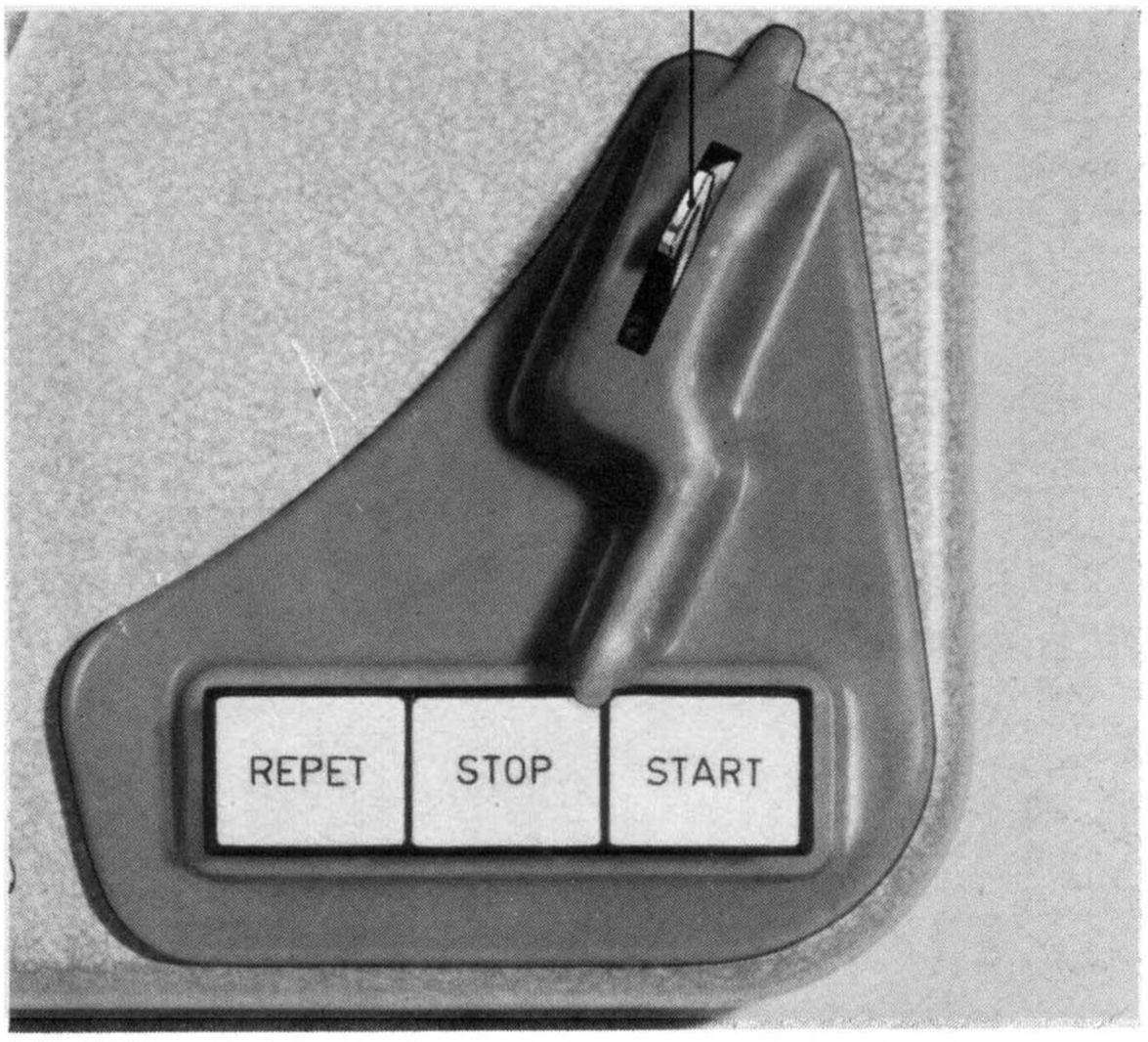

Push-Button Control from above

66 53 54

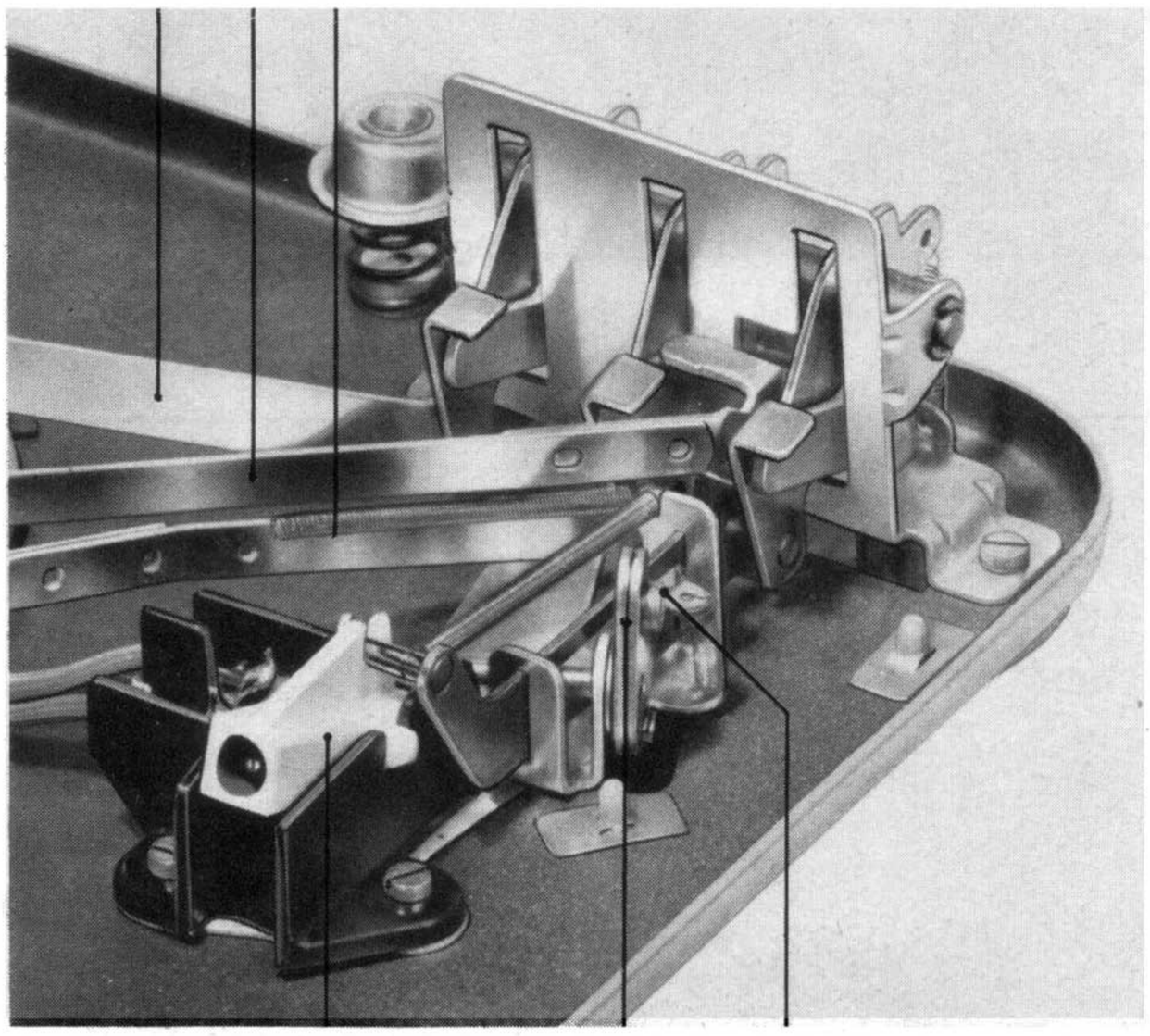

52 50 R 6

Push-Button Control with Power Switch from underneath.

forced between the spring contacts as long as the cam set is in rotation **or the changer in 0-position.**

If more than one signal source is to be connected in parallel (as for example a record changer and a tape recorder), provisions for a switch- or fade-over have to be made in view of the shortened pick-up leads in the 0-position.

Push-Button Control

The different functions, such as Start, Stop, and Repeat are controlled by the push-buttons at the right front of the unit. These are coupled with the locking device for the tone arm (locking lever Pos. 50) and the power switch (Pos. 52).

The design of the changer is such, that no damage can result in case of incorrect operating as for example pressing of more than one button at the same time.

Control Rods (Pos. 53, 54 and 66) connect the push-buttons with the mechanismus.

Muting Switch

The changer is equipped with a muting switch in order to avoid reproduction of noise during the changing cycle. This switch shortens the pick-up leads, and thus temporalily cuts out the amplifier. The knife-contact (Pos. SM 36) is driven by the engage lever (Pos. 7) and the rail (Pos. 19), and

SM 36 7 19

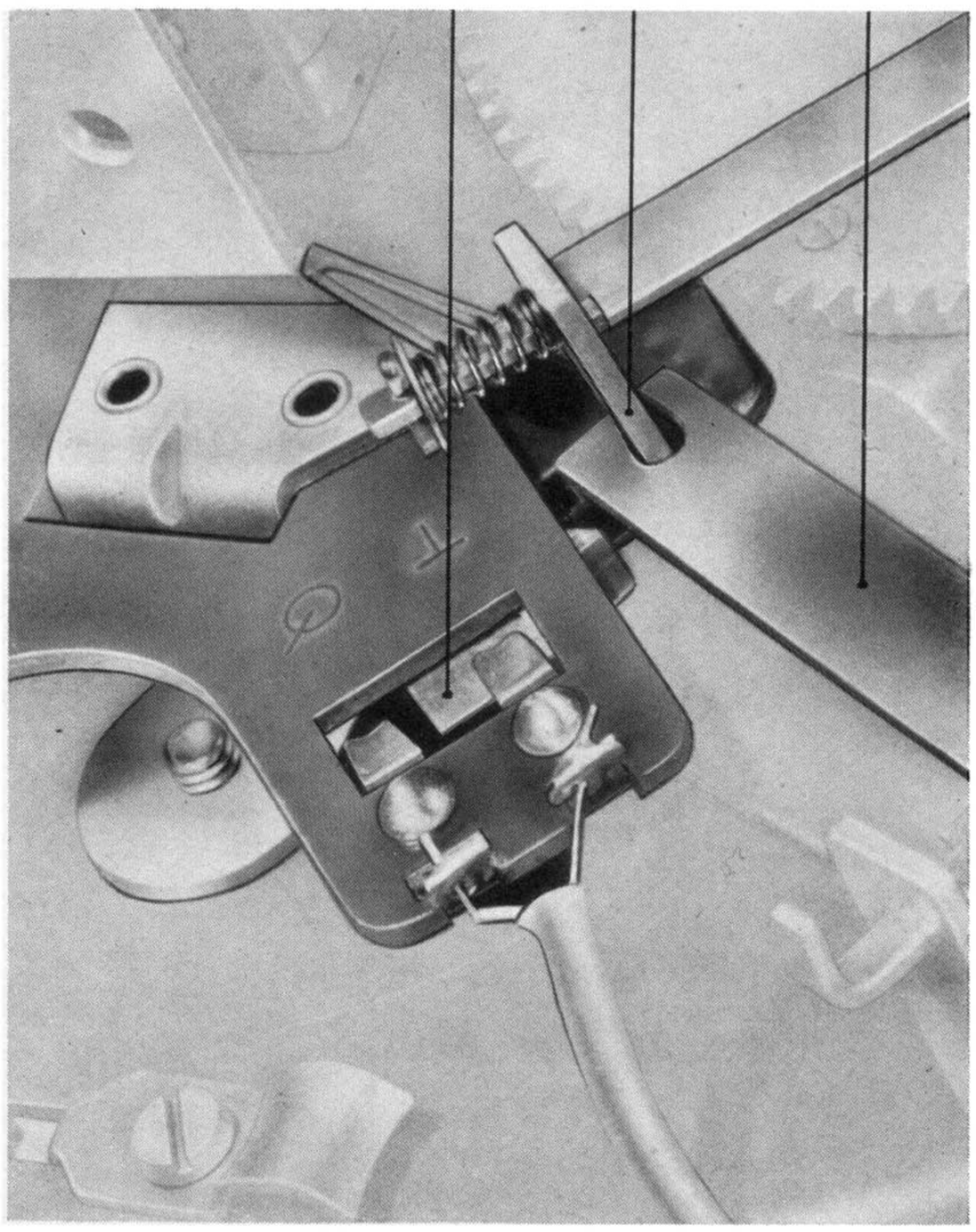

www.vinylengine.com

Diagram of functions during automatic touch-down and lifting of pick-up

Pick-up in rest position
or tracking a record

Pick-up head K

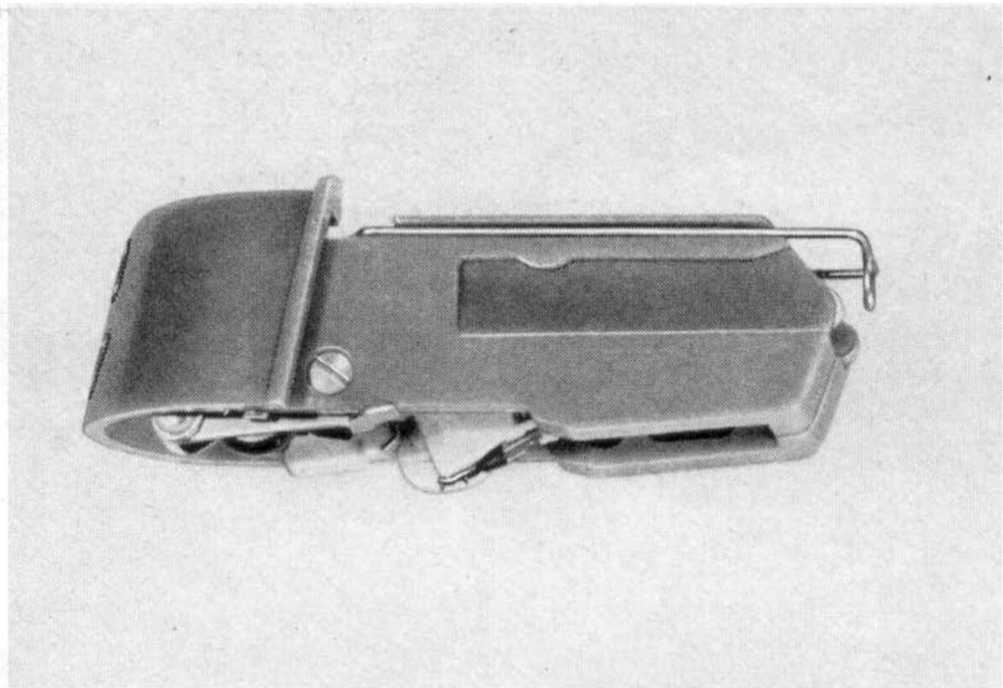

Indexing wheel retracted

Cut of tone arm base

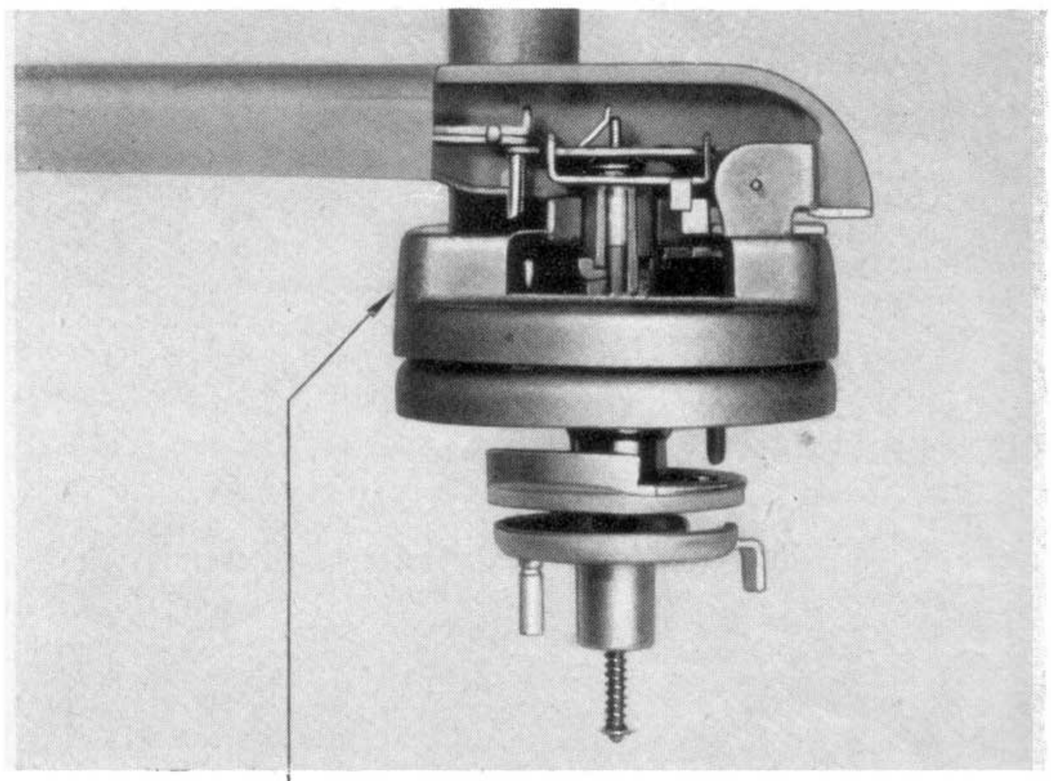

Playing position - Rest position
clutch open (disengaged)

Pick-up raises
and will then be driven towards center of record

Pick-up head K

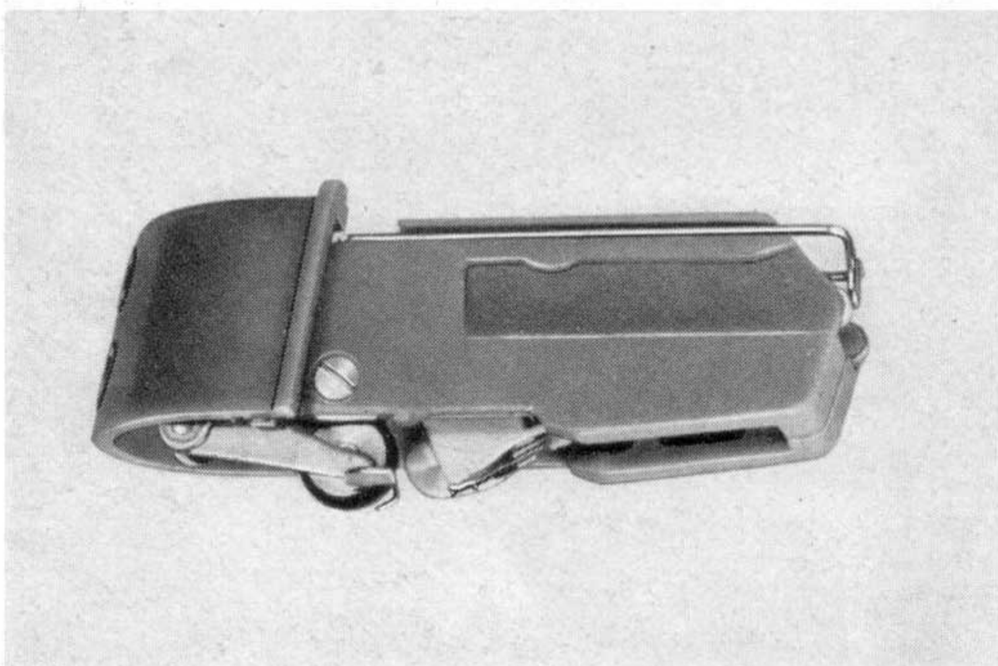

Indexing wheel out (triggered)

Cut of tone arm base

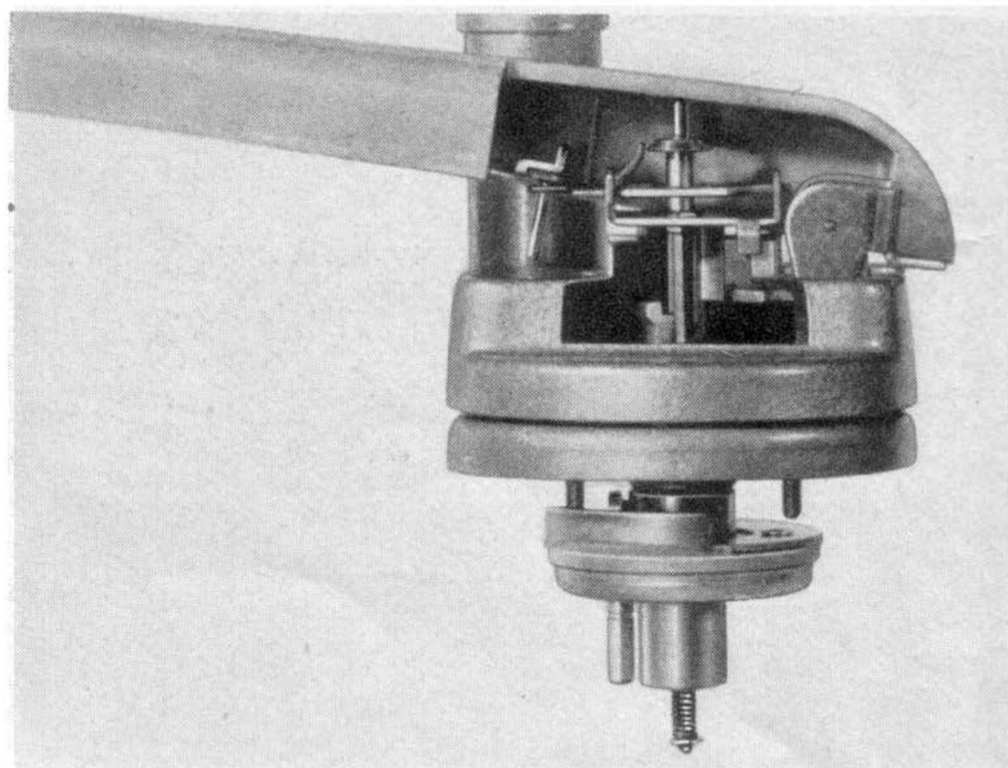

Action Pos. I
Lifting of pick-up
Closing (engaging) of clutch
Triggering of indexing wheel

www.vinylengine.com

Pick-up landed on record and is scanning
on its rubber wheel towards edge of record

Pick-up head K

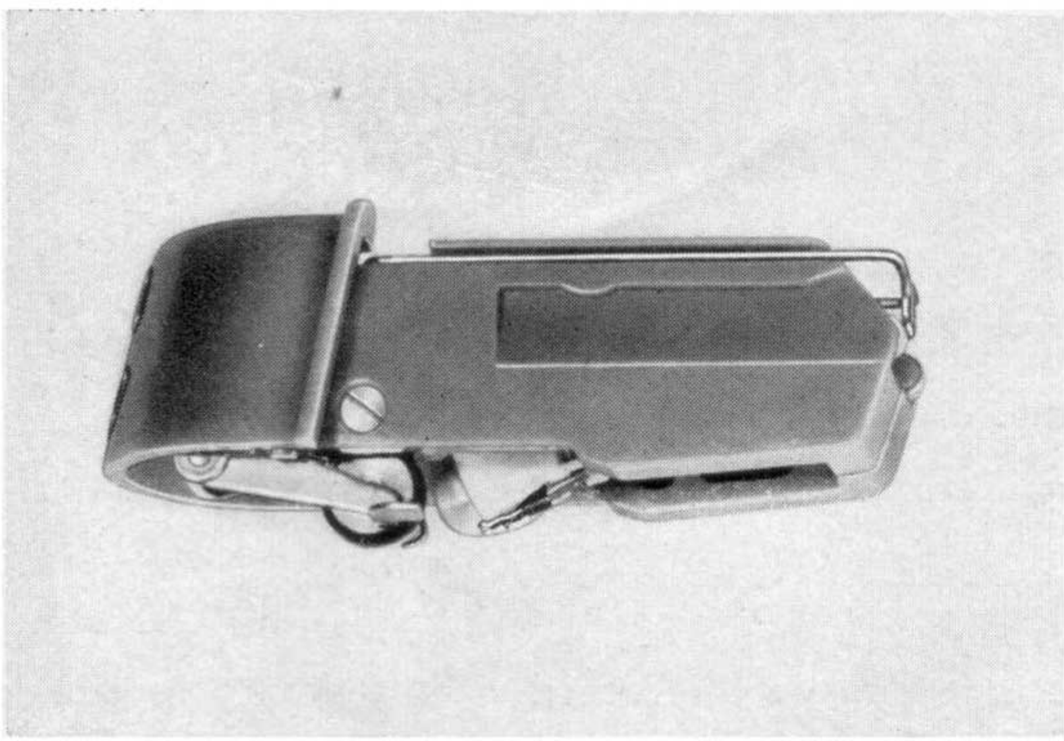

Indexing wheel out (triggered)

Cut of tone arm base

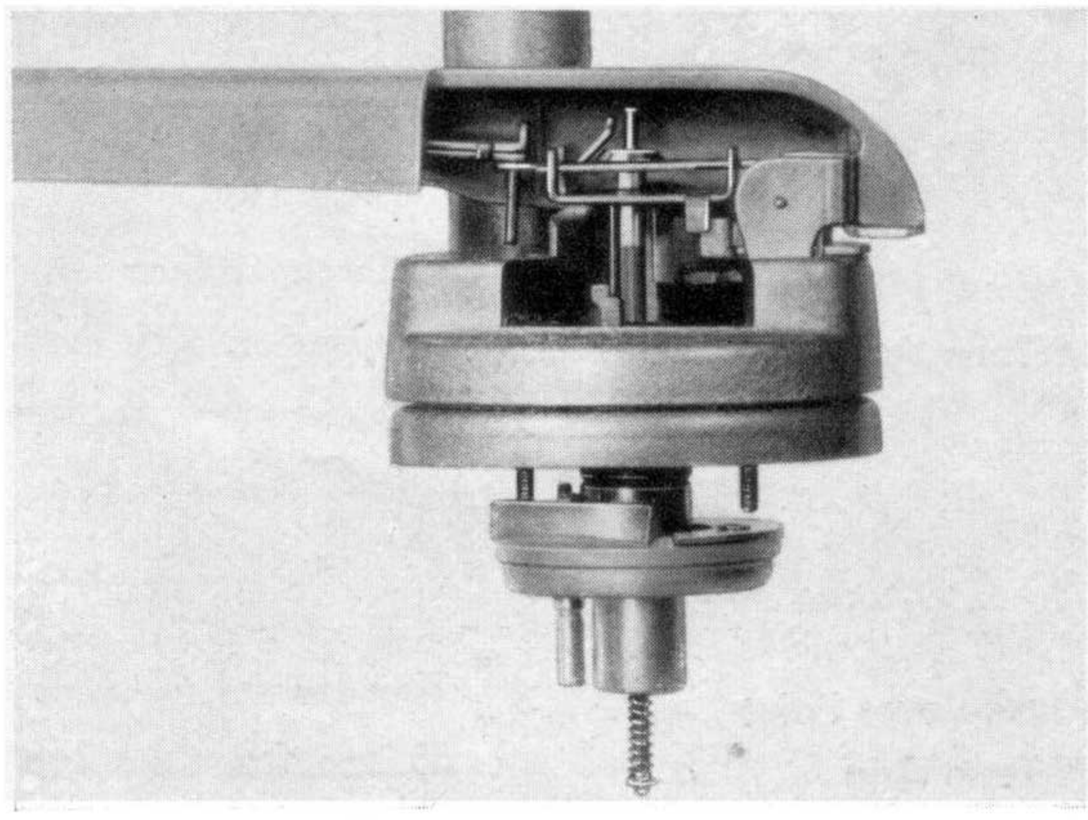

Action Pos. II

Indexing of record diameter
Clutch is closed (engaged)

Pick-up scans the surface of a record
or is already in rest position on its post

Pick-up head K

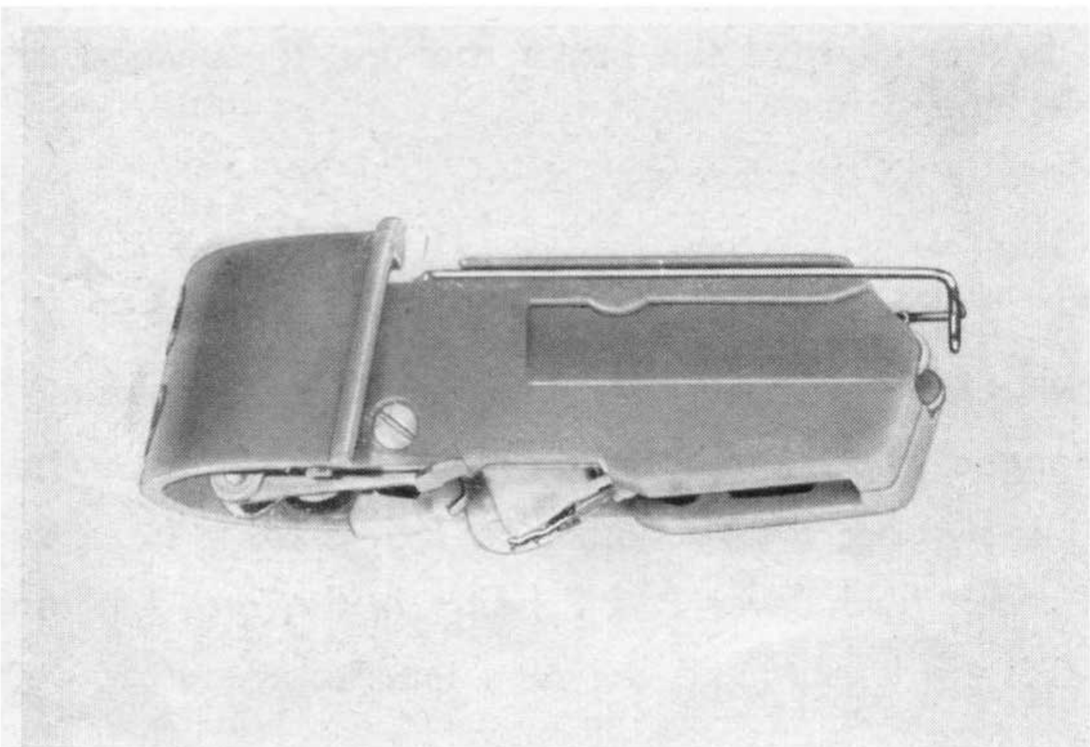

Indexing wheel retracted

Cut of tone arm base

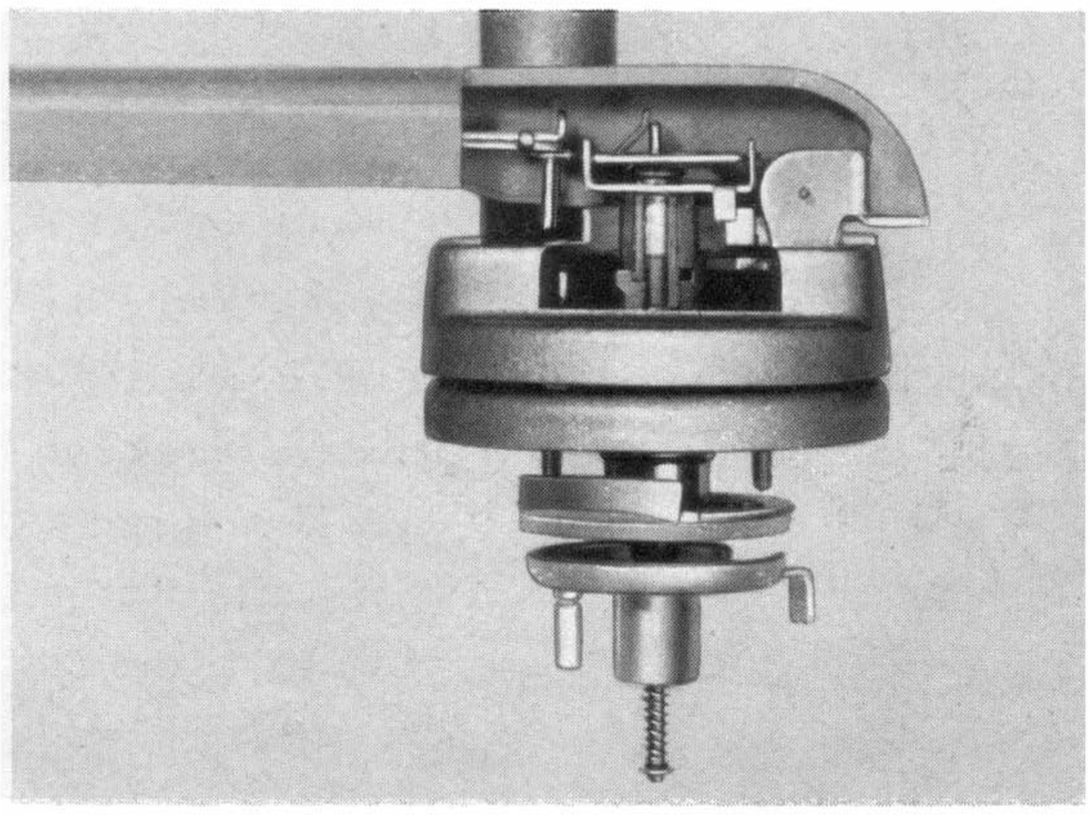

Playing position - Rest position

clutch open (disengaged)

www.vinylengine.com

6. Adjustments of the Record Changer

Pick-up Weight:

The pick-up weight is to be adjusted to 8 — 9 gramms by means of the built-in weight compensator. The control screw (Pos. R 7) is located at the front of tone arm base. (Special scales can be obtained from the factory).

Vertical Movement of Tone Arm:

With the adjustment screw (Pos. R 3) the vertical movement of the tone arm is to be adjusted in such manner that a distance of approx. 3 mm will be obtained between the lowest record of the stack and the tone arm during its movement to the centre.

Touch-down Point of Tone Arm (on record):

The correct touch-down point of the tone arm on the record when indexing its size is 80 mm from the centre. If required, an adjustment of Pos. R 2 is possible. Difficulties will be encountered with 7" records if the tone arm touches down outside of a 160 mm diameter circle. If the tone arm touches down too far inside, the shut-off device will be activated, resulting in a continued changing of records without playing them.

Tone Arm Locking:

For automatic locking of the tone arm it is essential that the locking lever (Pos. 50) can easily enter the resp. cut-out of the tone arm. For this purpose first the horizontal movement of the tone arm has to be adjusted with Pos. 10 (loosen hexagonal nut).

The vertical tolerance of approx. 0.5 mm can be obtained by adjusting the adjustment screw (Pos. R 6) while the tone arm is locked.

Tone Arm Brake:

The brake is adjusted correctly if a force of 4 — 6 gramms is required to move the tone arm horizontally while the brake is on. For measuring this, the pick-up head is to be removed, and a measuring scale to be connected to the very front end of the tone arm. The braking power can be adjusted with the adjustment screw (Pos. R 4). When disengaged, the distance between the brake lining of the brake rod and the clutch disk (Pos. 15) shall be approx. 1 mm.

Drive Engagement Lever (Pos. 4):

In order to transmit the required power from the motor shaft to the gear mechanismus, the drive wheel (Pos. 17) has to be engaged with the motor shaft by means of engagement lever (Pos. 4) in a proper way. For this purpose the twin-nut (Pos. R 5) is to be adjusted in such way that in 0-position of the unit (with lever Pos. 7 being in the rest position of the cam) a distance of approx. 0.6 mm is obtained between the rubber surface of the drive wheel and the motor shaft.

Record Dropping Whip:

The correct lift of the change bolt (Pos. 12) is to be adjusted with the eccentric adjustment screw R 1. It is to be observed that the dropping of records is done without difficulties, i. e. that no tendency for jamming exists at the highest point of the cam (Pos. AK). (The changing spindle has to be inserted and locked for this adjustment).

www.vinylengine.com

Indexing Wheel: The indexing device should in triggered position respond to a pressure of 4—6 gramms on the feeler, i. e. the rubber wheel should then retract. No adjustment of this part is possible, and if necessary, the empty pick-up shell No. 14 C - U 80 is to be replaced.

7. Wiring diagram

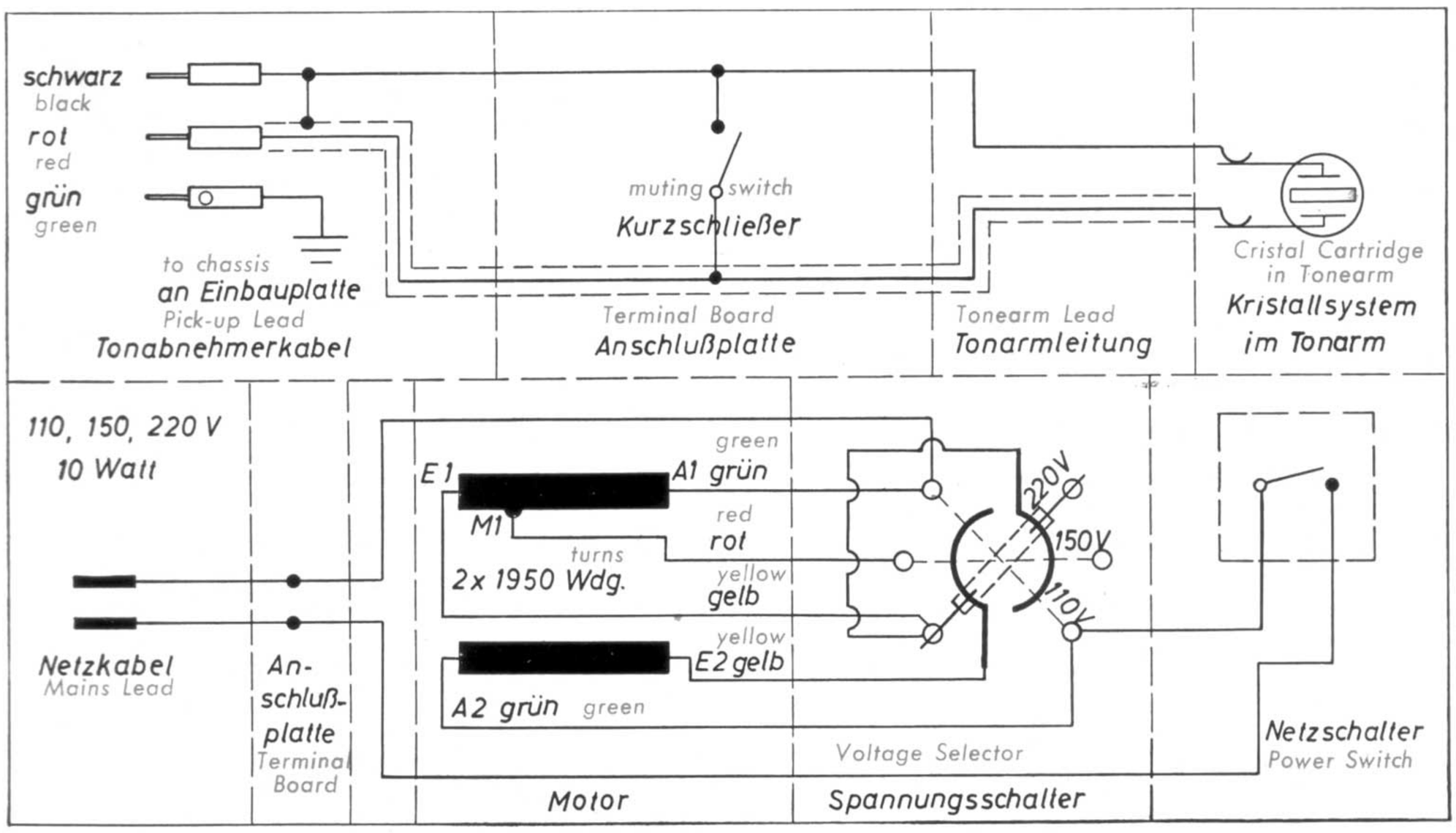

8. Observations:

1. Records The design of the unit is based on the use of records which comply with the industrial standards. Special attention should be paid to

a) the thickness of the record being 2.0 millimeters ± 0.4 mm
b) the centre hole diameter being

7.2 millimeters ± 0.09 on 10" and 12" records,
38.2 millimeters ± 0.05 on 7" records.

Furthermore it is of importance that both the run-in and run-out grooves are properly made (poor run-out grooves may result in inproper functioning of the automatic shut-off). The specially designed changing spindle with its unique "record-lift" action prevents centre hole damages. Should any such damages occur, they will without exceptions always be caused by inproper handling (bent or not used record overarm, resulting in the records not being parallel to the turntable!). Within the range of 17—30 centimeters (7—12 inches) the diameter of the records is of no importance, and any sizes of records within this range can be played.

www.vinylengine.com

2. Changing Spindle

The slide on the upper part of the changing spindle must always be in its lowest position after records have been loaded. It prevents dropping of more than one record at the same time (records of less than 1.6 millimeters thickness cause inproper dropping). The changing spindle must be turned clockwise when inserted until locking properly.

3. Changing Spindle AS 3

45 rpm records are changed automatically by the special 45 rpm spindle AS 3. It is advisable to remove the centre hole adapters from 45 rpm records. Faulty dropping of records is in almost all cases caused by poor condition of centre holes (remains of labels reaching into the centre holes must be removed!).

4. Pick-up Lead

If the distance between record changer and amplifier is to exceed 10 meters (30'), a special extension cable, available from our distributors, must be used in lieu of conventional pick-up lead.

5. Reproduction Quality

The wide-range crystal pick-up system secures high fidelity reproduction in its truest sense. For ultimate requirements, equalizer circuits (see technical manual CDS 2/3) can be used, and the record changer can be equipped with a diamond stylus (see list S 457). For an improvement in reproduction of old 78-records which have already been played with steel-needles, special pick-up heads and styli are available (see list S 457).

6. Wheel Indexer for Record Diameter

The pick-up head is equipped with an indexing device for the record diameter which safely and rapidly leads the stylus of the pick-up into the run-in groove of the record on the turntable. The necessary triggering of the indexing device for each indexing cycle is accomplished through a rod inside the tone arm. Inadequate triggering will result if the pick-up head is not fully inserted and locked in the tone arm, and the record will be played only from the touch-down point of the tone arm on.

7. Lubrication

The unit is adequately lubricated for a long time of maintenance-free operation (depending on use up to 2 years). Lubrication must be done in strict compliance with our manual for lubrication 1003 / 1004 / 1005. It is essential for proper functioning that only such types of oil and grease are used as listed in our manual.

GEBRÜDER STEIDINGER · ST. GEORGEN / SCHWARZWALD

V 164 - 3000 - engl. - 108 H.

Printed in Germany

www.vinylengine.com