The Harman Kardon

Model AVR5/ AVR18RDS

Manual A

AUDIO AND VIDEO RECEIVER

Technical Manual

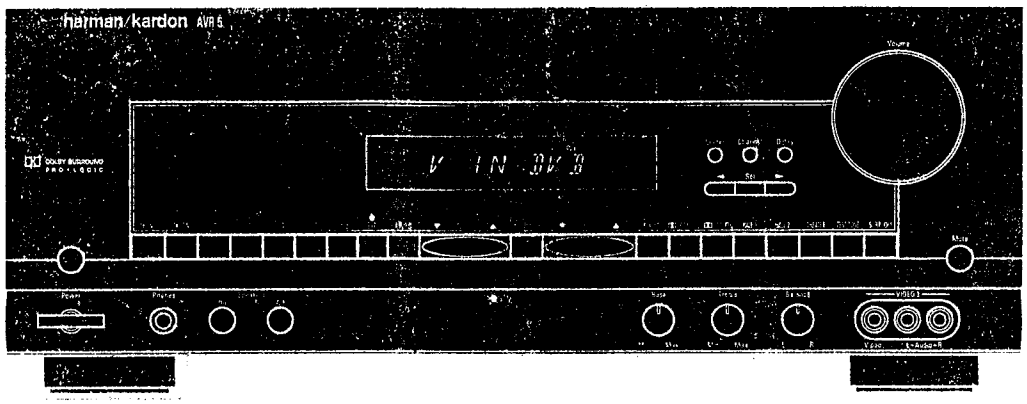

CONTENTS

SPECIFICATIONS 2
ELECTROSTATICALLY SENSITIVE (ES) DEVICE 3
LEAKAGE TEST 4
ALIGNMENT PROCEDURES 5
TEST EQUIPMENT REQUIRED 5
ALIGNMENT AND TEST POINTS 5
CONTROLS AND FUNCTIONS 8
CIRCUIT DESCRIPTION 11
BLOCK DIAGRAM 21
DISASSEMBLY PROCEDURES 22
EXPLODED VIEW 25
PRINCIPAL SCREW LOCATIONS 27
ELECTRICAL PARTS LIST 30
IC BLOCK DIAGRAMS 56
P.C. BOARDS 66
SCHEMATIC DIAGRAMS 70
WIRING DIAGRAM 77
PACKING MATERIAL AND PARTS LIST 78

harman/ kardon

Parts and Service Office
250 Crossways Park Dr, Woodbury, N.Y. 11797
1112 AVR5/AVR18RDS 1200 Printed in Japan

SPECIFICATIONS

FRONT AMP SECTION

	Nominal	Limit
Continuous Power Output		
(STEREO MODE), Input: CD	≥50W	≥45W
THD: 0.08%, 8ohms		
Both Channel Driven (20Hz - 20Hz)		
(SURROUND MODE)	≥40W	≥35W
THD: 0.3%, 8ohms, 1KHz		
THD at 50W, 8ohms, Input: CD		
20Hz	≤0.05%	≤0.08%
1KHz	≤0.05%	≤0.08%
20KHz	≤0.05%	≤0.08%
IM Distortion at 50W, 8ohms, Vol: Max		
	≤0.05%	≤0.08%
Input Sensitivity for Rated Power Output (50W)		
Tape Monitor/ CD/ DVD	200mV	150-250mV
Video 1/ Video 2/ Video 3/ 6-CH In	200mV	150-250mV
S/N Ratio Input Shorted at 1KHz 1W Output (WTD IHF-A)		
CD	≥95dB	≥90dB
Tone Control		
Bass: 100Hz	+10dB	+10±2dB
	- 10dB	- 10±2dB
Treble: 10Hz	+10dB	+10±2dB
	- 10dB	- 10±2dB
Frequency Response at -3dB		
Mode: Stereo, Ref: 1KHz, 10Hz-120KHz 15Hz-100KHz		
Channel Crosstalk Input Shorted by 1Kohms		
100Hz	≥60dB	≥52dB
1KHz	≥60dB	≥52dB
10KHz	≥50dB	≥42dB

CENTER AMP SECTION

	Nominal	Limit
RMS Output Power		
THD (0.05%, 8ohms, 1KHz)	≥40W	≥35W
Only Center Channel Driven		
S/N Ratio (Input Level: 350mV)	≥70dB	≥65dB
Input shorted, IHF-A WTD		
Frequency Response at-3dB		
8ohms, Dolby Pro-Logic	40Hz-30KHz	60Hz-20KHz

REAR AMP SECTION

	Nominal	Limit
RMS Output Power		
THD (0.7%, 8ohms, 1KHz)	≥40W	≥35W
Only Rear Channel Driven		
S/N Ratio (Input shorted, IHF-A WTD)	≥63dB	≥55dB
Delay: 20ms, Input Level: 350mV		
Frequency Response at-3dB		
8ohms, Dolby Pro-Logic	80Hz-7KHz	100Hz-6KHz

VIDEO AMP SECTION

	Nominal	Limit
Input Sensitivity/Impedance		
(DVD, VIDEO1, VIDEO2, VIDEO3)	1Vp-p/75 Ω	±1dB
Output Level/Impedance		
VIDEO1, Monitor	1Vp-p/75 Ω	±1dB
Frequency Response at-3dB	DC-8MHz	DC-6MHz

FM SECTION

	Nominal	Limit
Tuning Cover Range		
USA/ Canada: 100KHz STEP	87.50-108.00MHz	
Europe : 50KHz STEP	87.50-108.00MHz	
Mono Usable Sensitivity(75ohms Input, 98MHz)		
	≤12.2dbf	≤17.3dbf
Image Rejection (at 98MHz)		
USA/Canada	≥40dB	≥35dB
Europe	≥70dB	≥65dB
IF Rejection (at 98MHz)	≥80dB	≥70dB
50dB Quieting Sensitivity (at 98MHz, 100% MOD.)		
IHF Band Pass Filter		
Stereo	≤41.2dbf	≤47.3dbf
Distortion (1KHz, 100% MOD. at 98MHz, 65dbf Input)		
IHF Band Pass Filter		
Mono	≤0.3%	≤0.5%
S/N Ratio (500 Input, 100% MOD. at 98MHz)		
IHF Band Pass Filter		
Stereo	≥65dB	≥60dB
Frequency Response(-3dB)		
USA/Canada De-Emphasis: 75μs	20Hz-15KHz	40Hz-14KHz
Europe De-Emphasis: 50μs	20Hz-15KHz	40Hz-14KHz
AM suppression at 98MHz		
	≥52dB	≥47dB
Muting threshold (at 98MHz)	35.2dbf	31.2-39.2dbf
Overload Distortion at 98MHz	0.3%	1%
Capture Ratio at 65dbf	≤1.5dB	≤2.5dB
Stereo Separation (at 98MHz, 100% MOD., 500μV Input)		
IHF Band Pass Filter	≥40dB	≥30dB
1KHz		
Tape out Level (at 98MHz)		
	500mV	350-650mV

AM SECTION

	Nominal	Limit
Tuning Cover Range (MW)		
USA/ Canada: 10KHz STEP	520-1710MHz	
Other : 9KHz STEP	522-1611MHz	
Usable Sensitivity		
999/990KHz	≤500μV/m	≤1000μV/m
Image Rejection (at 999KHz)	≥35dB	≥30dB
AGC Figure of Merit (From 100mV/m at 999/1000KHz)		
	≥55dB	≥50dB
Distortion (999/1000Hz, 30% MOD. 50mVm Input)		
	≤1.0%	≤1.5%
Frequency Response (999/1000KHz) at -6dB		
	80Hz-2.3KHz	100Hz-2KHz
Selectivity (at 999/1000Hz)		
9KHz/ 10KHz	≥25dB	≥20dB
S/N Ratio (999/k1000KHz, With Antenna Input 50mV/m)		
	≥40dB	≥35dB
Overload Distortion at 999/1000KHz		
	≥1%	≥1.5%
TAPE Output Level at 999/1000KH (5mV/m Input)		

GENERAL

	Nominal	Limit
Power Consumption		
At Rated Power All Channel Driven		
USA/Canada	195W (1/8Pmax)	160-200W
Europe	550W	500-600W
Idling at Minimum Volume Control		
USA/Canada	70W	50-90W
Europe	70W	50-90W
Power Supplies:		
USA/Canada	AC120V, 60Hz	
Europe	AC230V, 50Hz	
Dimensions (W×H×D)		
inches	17.3×5.5×15	
mm	440×140×380	
Weight(lbs/ kgs)	28.8/ 13.1	

ELECTROSTATICALLY SENSITIVE (ES) DEVICES

Some semiconductor (solid state) devices can be damaged easily by static electricity. Such components commonly are called Electrostatically Sensitive (ES) Devices. Examples of typical ES devices are integrated circuits and some field effect transistors and semiconductor "chip" components. The following techniques should be used to help reduce the incidence of component damage caused by static electricity.

1. Immediately before handling any semiconductor component or semiconductor-equipped assembly, drain off any electrostatic charge on your body by touching a known earth ground. Alternatively, obtain and wear a commercially available discharging wrist strap device, which should be removed for potential shock reasons prior to applying power to the unit under test.

2. After removing an electrical assembly equipped with ES devices, place the assembly on a conductive surface such as aluminum foil, to prevent electrostatic charge buildup or exposure of the assembly.

3. Use only a grounded-tip soldering iron to solder or unsolder ES devices.

4. Use only an anti-static solder removal device. Some solder removal devices not classified as "anti-static" can generate electrical charges sufficient to damage ES devices.

5. Do not use freon-propelled chemicals. These can generate electrical change sufficient to damage ES devices.

6. Do not remove a replacement ES device from its protective package until immediately before you are ready to install it. (Most replacement ES devices are packaged with leads electrically shorted together by conductive foam, aluminum foil or comparable conductive material.)

7. Immediately before removing the protective material from the leads of a replacement ES device, touch the protective material to the chassis or circuit assembly into which the device will be installed.

   CAUTION: Be sure no power is applied to the chassis or circuit, and observe all other safety precautions.

8. Minimize bodily motions when handling unpackaged replacement ES devices. (Otherwise harmless motion such as the brushing together or your clothes fabric or the lifting of your foot from a carpeted floor can generate static electricity sufficient to damage an ES device.)

PRODUCT SAFETY NOTICE

Each precaution in this manual should be followed during servicing.
Components identified with the IEC symbol ⚠ in the parts list are of special significance to safety. When replacing a component identified with ⚠ , use only the replacement parts designated, or parts with the same ratings or resistance, wattage, or voltage that are designated in the parts list in this manual.
Leakage - current or resistance measurements must be made to determine that exposed parts are acceptably insulated from the supply circuit before returning the product to the customer.

LEAKAGE TEST (FOR SERVICE ENGINEERS IN THE U.S.A.)

Before returning the unit to the user, perform the following safety checks:

1. Inspect all lead dress to make certain that leads are not pinched or that hardware is not lodged between the chassis and other metal parts in the unit.
2. Be sure that any protective devices such as nonmetallic control knobs, insulating fishpapers, cabinet backs, adjustment and compartment covers or shields, isolation resistor-capacity networks, mechanical insulators, etc. Which were removed for servicing are properly reinstalled.
3. Be sure that no shock hazard exists; check for leakage current using Simpson Model 229 Leakage Tester, standard equipment item No. 21641, RCA Model WT540A or use alternate method as follows: Plug the power cord directly into a 120-volt AC receptacle (do not use an Isolation Transformer for this test). Using two clip leads, connect a 1500 Ohm, 10-watt resistor paralleled by a 0.15μF capacitor, in series with all exposed metal cabinet parts and a known earth ground, such as a water pipe or conduit. Use a VTVM or VOM with 1000 Ohms per volt, or higher sensitivity to measure the AC voltage drop across the resistor. (See Diagram.) Move the resistor connection to each exposed metal part having a return path to the chassis (antenna, metal, cabinet, screw heads, knobs and control shafts, escutcheon, etc.) and measure the AC voltage drop across the resistor. (This test should be performed with the power switch in both the On and Off positions.)

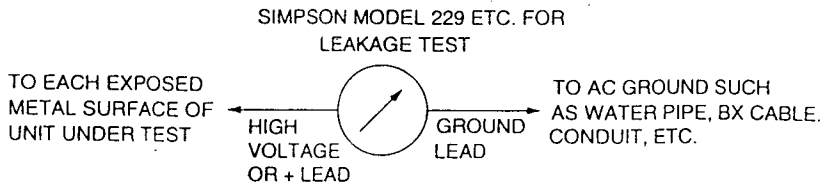

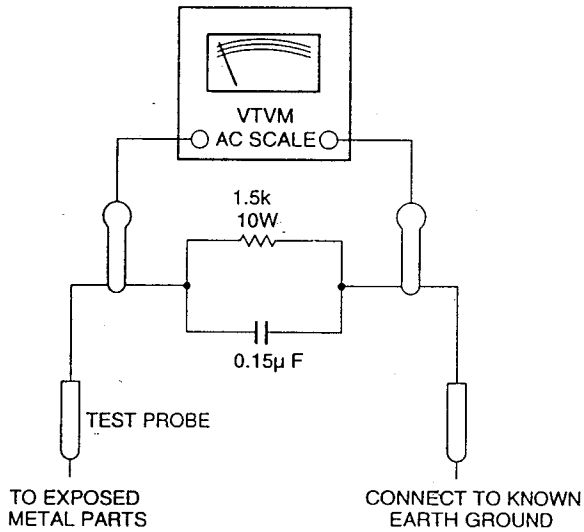

A reading of 0.35 volt RMS or more is excessive and indicates a potential shock hazard which must be corrected before returning the unit to the owner.

ALIGNMENT PROCEDURES

1. Test Equipment Required

- AM Standard Signal Generator (AM SSG)
- Oscilloscope
- AC Voltmeter
- FM Standard Signal Generator (FM SSG)
- Stereo Modulator
- Audio Generator
- Distortion Meter
- DC Voltmeter
- Frequency Counter

Note: Disconnect external FM antenna prior to alignment

2. Alignment and Test Points

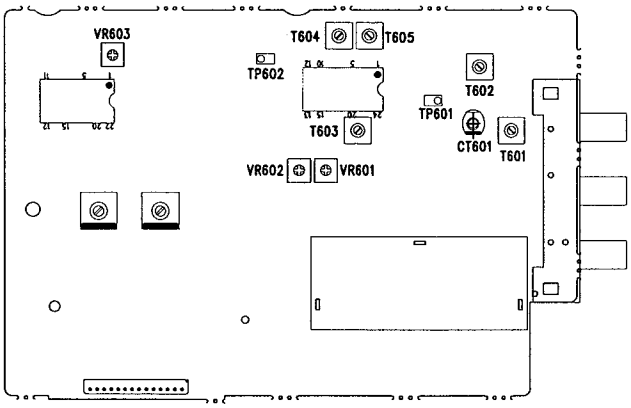

3. AM IF and RF Alignment

Preparation

1. Output of signal Generator should not be higher than necessary to obtain an optimum output reading.
2. Signal Generator Modulation: 30%
3. Switch: Press to AM.

Step	Signal Generator Frequency	Receiver Frequency on the Display	Equipment Connection	Adjustment Point	Adjust for
1	990KHz (400Hz, Mod.)	520KHz	DC Voltmeter TP601	T602	1.2V reading Maximum
2	600KHz (400Hz, Mod.)	600KHz	AC Voltmeter to TAPE OUT jack	T601	reading Maximum
3	1400KHz (400Hz, Mod.)	400KHz	AC Voltmeter to TAPE OUT jack	CT601	reading Maximum
4	990KHz (400Hz, Mod.)	990KHz	AC Voltmeter to TAPE OUT jack	T603	reading FL display "TUNED"
5	990KHz (400Hz, Mod.)	990KHz	Same as Step 1.	VR601	Indicator on receiver with AM SSG Output level of 800 μV/m

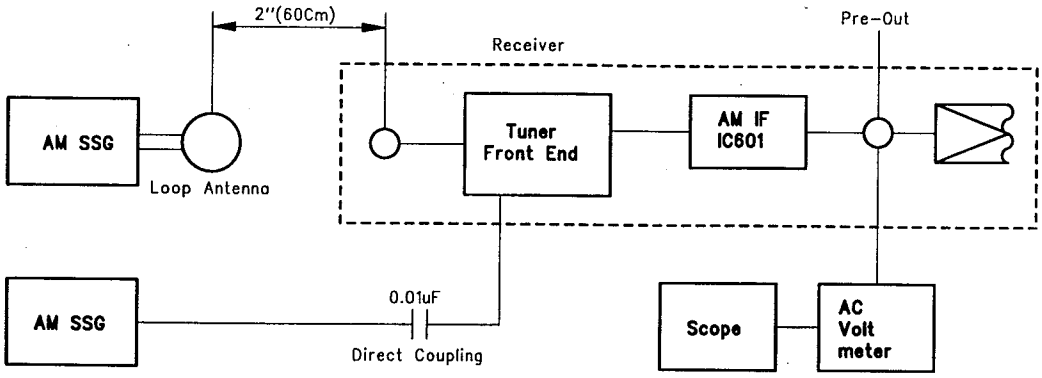

AM Alignment Connection

4. FM IF Alignment

Preparation

1. Signal Generator output should be no higher than necessary to obtain an optimum output reading.
2. Switch Press to FM.
3. Signal generator deviation: 75KHz (AVR5) 40KHz (AVR18RDS)

Step	Signal Generator Frequency	Receiver Frequency on the Display	Equipment Connection	Adjustment Point	Adjust for
1	98.0MHz (1KHz, Mod.)	98.0MHz	DC Voltmeter to TP 602	T604	Zero reading on DC voltmeter
2	98.0MHz (1KHz, Mod.)	98.0MHz	Distortion meter to TAPE OUT jack	T605	Minimum distortion
3	98.0MHz (1KHz, Mod.)	98.0MHz	Same as Step 1	VR602	FL display "TUNED" Indication on receiver with FM SSG output level of 35.2 dbf

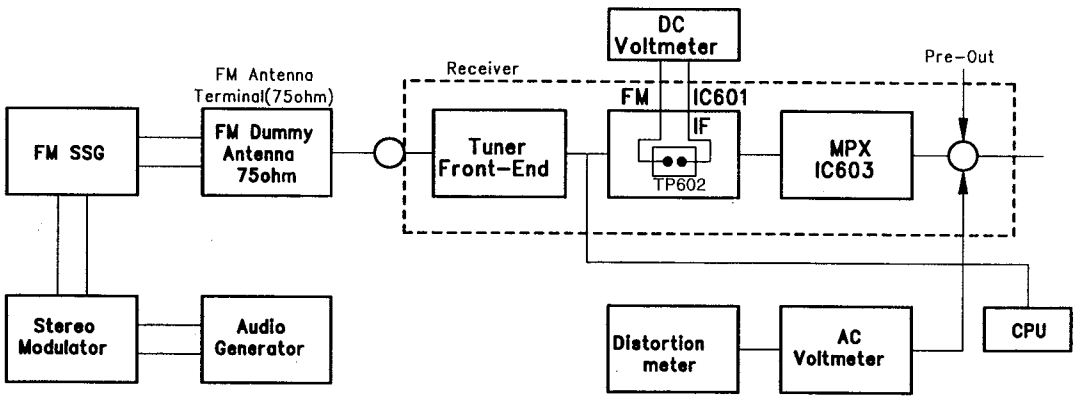

FM RF/IF and MPX Alignment Connection

5. MPX Alignment, SM Alignment

Preparation

1. Switch : Press to FM.
2. Tuner for 98MHz on band.
3. Signal Generator output level : 1000 μV.
4. Deviation : 75 KHz (AVR5) , 40 KHz (AVR18RDS) at 100% modulation of composite signal.
5. Connect Signal Generator to FM antenna terminal through FM dummy antenna (75 Ω).

Step	19KHz Modulation Level	Signal Generator Frequency Setting	Equipment Connection	Adjustment Point	Adjust for
1	7.5KHz Mod.	Composite to channel 1KHz R	AC voltmeter to TAPE OUT jack of R channel	-	Adjust for about 450mV of audio output
2	7.5KHz Mod.	Composite to channel 1KHz L	AC voltmeter to TAPE OUT jack of R channel	VR603	AC voltmeter reading should be at least 40dBbelow.
3	7.5KHz Mod.	Composite to channel 1KHz R	AC voltmeter to TAPE OUT jack of L channel	VR603	Same as Step 2.
If you could not obtain -40dB reading in Steps 2 and 3 (compared with Step 1), read just VR603 until you obtain -40dB readings for both steps 2 and 3. Nominal is -45dB.					

CONTROLS AND FUNCTIONS

Front Panel Controls

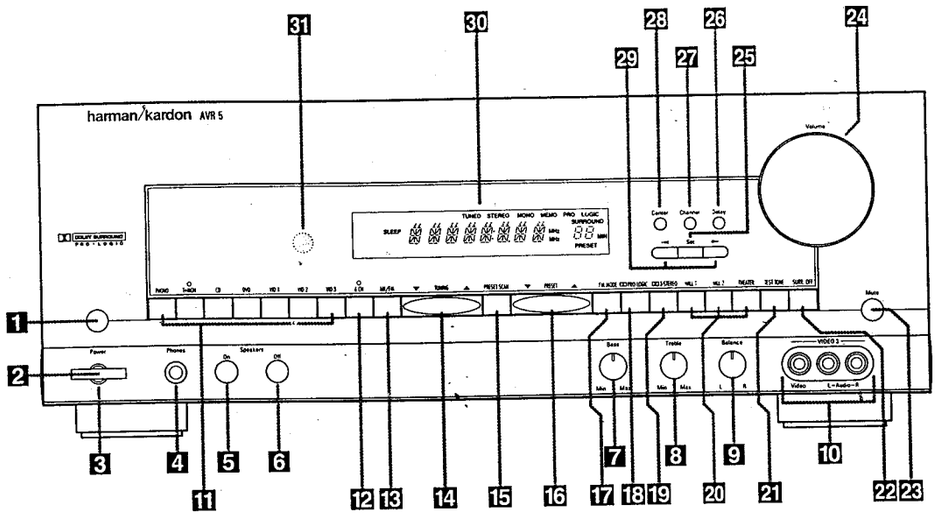

1 Main Power Switch: Press this button to apply power to the AVR5/AVR18RDS. When the switch is pressed in the unit is placed in a Standby mode, as indicated by the amber LED 3 surrounding the **System Power Control** 2. This button MUST be pressed in to operate the unit. To turn the unit off and prevent the use of the remote control, this switch should be pressed until it pops out from the front panel so that the word "OFF" may be read at the top of the switch.

NOTE: In normal operation this switch is left in the "ON" position.

2 System Power Control: When the **Main Power Switch** 1 is "ON," press this button to turn on the AVR5/ AVR18RDS; press it again to turn the unit off. Note that the **Power Indicator** surrounding the switch 3 will turn green when the unit is on.

3 Power Indicator: This LED will illuminate in amber when the unit is in the Standby mode to signal that the unit is ready to be turned on. When the unit is in operation, the indicator will turn green. A red indicator means that the unit is in the Protect mode, and should be turned off and then checked for a possible speaker wire short circuit.

4 Headphone Jack: This jack may be used to listen to the AVR5/ AVR18RDS's output through a pair of headphones. Be Certain that the headphones have a standard 1/4" stereo phone plug.

7 Bass Control: Turn this control to modify the low-frequency output of the left/right channels by as much as ±10dB. Set this control to a suitable position for your taste and room acoustics.

5 Speakers ON Button: This button turns the speakers on for normal listening.

6 Speakers OFF Button: This button turns the speakers off for private listening when the headphones are in use.

8 Treble Control: Turn this control to modify the high-frequency output of the left/right channels by as much as ±10dB. Set this control to a suitable position for your taste and room acoustics.

9 Balance Control: Turn this control to change the relative volume for the front left/right channels.

NOTE: For proper operation of the surround modes this control should be at the midpoint, or "12 o'clock" position.

10 Video 3 Inputs: These audio/video inputs may be used for temporary connection of video games, camcorders, digital still cameras or portable audio products. To select a source connected to these jacks, press the **Vid 3 Input Selector** 11.

11 Input Selectors: Press one of these buttons to select or change the input source. If the unit is in the Standby mode, pressing one of these buttons will also turn the AVR5/AVR18RDS on.

12 6-Channel Direct Selector: Press this button to select the output of an optional, external 6-channel decoder connected to the **6 Ch Direct** inputs 18 as the listening source.

13 AM/FM : Press this button to select the tuner as the AVR5/ AVR18RDS's input source. When it is first pressed the last station tuned will be heard. Press it again to change between AM and FM bands.

14 Tuning Button: Press the left side of the button to tune lower frequency stations and the right side of the button to tune higher frequency stations. When a station with a strong signal is tuned, the **TUNED** indicator will illuminate in the **Information Display** 30. A brief (1/2 second) press of the button will manually tune to the next frequency increment, while pressing and holding the button for a longer period will automatically tune to the next station with a signal strong enough for acceptable reception.

15 Preset Scan: Press this button to automatically scan through the stations that have been programmed in the AVR5/ AVR18RDS's memory. The tuner will play five seconds of each station before moving to the next preset station. To stop the scan when the desired station is heard, press the button again.

16 Preset Stations Selector: Press this button to select stations that have been entered into the preset memory.

17 FM Mode: Press this button to select the stereo or mono mode for FM tuning. In the STEREO mode a **Stereo** indicator will illuminate in the **Information Display** 30, and stereo reception will be provided when stations are transmitting stereo signals. In the MONO mode the left and right signals from stereo broadcasts will be mixed together and reproduced through all channels. Select MONO for better reception of weak signals.

18 Dolby Pro Logic Selector: Press this button to select the Dolby Pro Logic surround mode when listening to an analog program that is encoded with surround-sound information.

19 Dolby 3 Stereo Selector: Press this button to select the Dolby 3 Stereo listening mode. This mode is used primarily when a program has surround information when a center channel speaker, but no surround speakers, is installed.

20 Analog Surround Mode Selectors: Press one of these buttons to select the analog surround modes. These modes may be used with any analog program source to create a pleasing surround effect.

21 Test Tone: Press this button to begin the sequence of steps used to set the AVR5/AVR18RDS output levels. When this button is pressed, a test tone will replace the currently selected listening source and the **Information Display** 30 will show the channel where the test tone appears. The test tone will automatically switch to the next channel after three seconds.

22 Surround Off: Press this button to turn off all surround processing, and to listen to a program in traditional stereo from the left front and right front speakers only.

23 Mute: Press this button to momentarily silence the speaker output of the AVR5/ AVR18RDS.

24 Volume Control: Turn the knob clockwise to increase volume, counterclockwise to decrease the volume.

25 Set Button: This button has two functions. If this button is pressed while in normal operation, the **Information Display** 30 will show the Surround mode for three seconds. This button is also used to enter an output level setting when using the **Test Tone** and **Selector Buttons** 21 29.

26 Delay: Press this button to enter delay time settings.

27 Channel Select: Press this button during normal operation, or during the Test Tone operation, to begin the process that adjusts the output levels.

NOTE: Be sure to select the Dolby Pro Logic surround mode before calibration so that all five channels will be adjusted.

28 Center Speaker Select Button: Press this button to select the center channel speaker. When it is first pressed, the **Information Display** 30 will show the currently selected speaker type. Press it again to show another speaker type or no speaker option (this option is available with the Dolby Pro Logic surround mode only).

Release this button when a desired selection is shown in the **Information Display** 30.

29 Selector Buttons: Press these buttons to adjust the AVR5/AVR18RDS output levels. You may use these buttons while you are checking the output levels by pressing either the **Test Tone Button** 21 or the **Channel Select Button** 27.

NOTE: Be sure to press the **Set Button** 25 to enter a new output level each time you adjust the channel.

30 Information Display: This display delivers messages and status indications to help you operate the receiver.

31 Remote Sensor Window: The sensor behind this window receives infrared signals from the remote control. Aim the remote at this area and do not block or cover it unless an external remote sensor is installed.

CONTROLS AND FUNCTIONS

Front Panel Controls

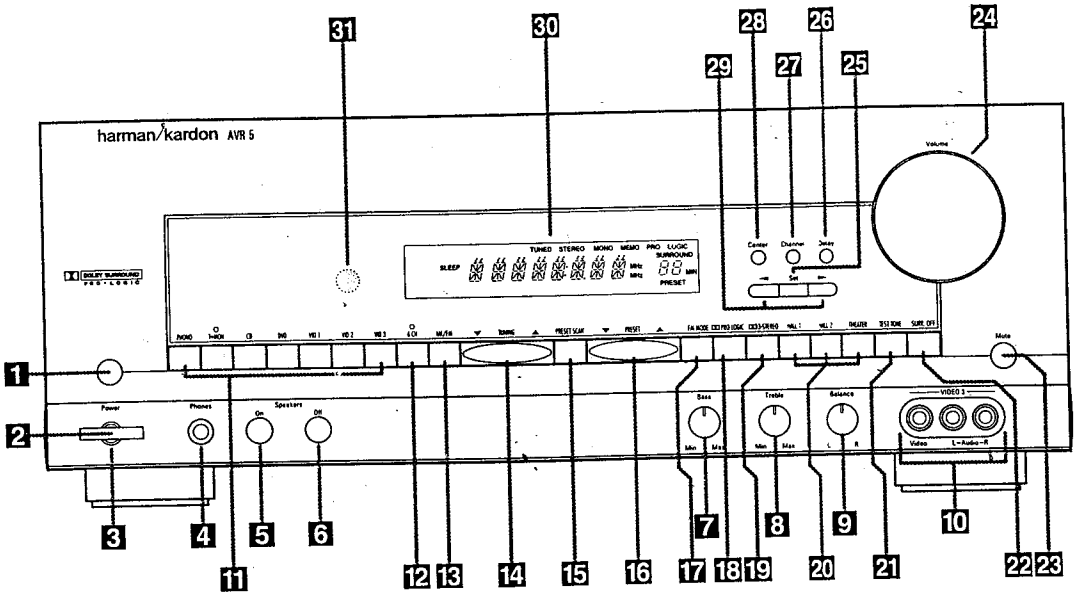

1 Main Power Switch: Press this button to apply power to the AVR5/AVR18RDS. When the switch is pressed in the unit is placed in a Standby mode, as indicated by the amber LED **3** surrounding the **System Power Control 2**. This button MUST be pressed in to operate the unit. To turn the unit off and prevent the use of the remote control, this switch should be pressed until it pops out from the front panel so that the word "OFF" may be read at the top of the switch.

NOTE: In normal operation this switch is left in the "ON" position.

2 System Power Control: When the **Main Power Switch 1** is "ON," press this button to turn on the AVR5/ AVR18RDS; press it again to turn the unit off. Note that the **Power Indicator** surrounding the switch **3** will turn green when the unit is on.

3 Power Indicator: This LED will illuminate in amber when the unit is in the Standby mode to signal that the unit is ready to be turned on. When the unit is in operation, the indicator will turn green. A red indicator means that the unit is in the Protect mode, and should be turned off and then checked for a possible speaker wire short circuit.

4 Headphone Jack: This jack may be used to listen to the AVR5/ AVR18RDS's output through a pair of headphones. Be Certain that the headphones have a standard 1/4" stereo phone plug.

7 Bass Control: Turn this control to modify the low-frequency output of the left/right channels by as much as ±10dB. Set this control to a suitable position for your taste and room acoustics.

5 Speakers ON Button: This button turns the speakers on for normal listening.

6 Speakers OFF Button: This button turns the speakers off for private listening when the headphones are in use.

8 Treble Control: Turn this control to modify the high-frequency output of the left/right channels by as much as ±10dB. Set this control to a suitable position for your taste and room acoustics.

9 Balance Control: Turn this control to change the relative volume for the front left/right channels.

NOTE: For proper operation of the surround modes this control should be at the midpoint, or "12 o'clock" position.

10 Video 3 Inputs: These audio/video inputs may be used for temporary connection of video games, camcorders, digital still cameras or portable audio products. To select a source connected to these jacks, press the **Vid 3 Input Selector 11**.

11 Input Selectors: Press one of these buttons to select or change the input source. If the unit is in the Standby mode, pressing one of these buttons will also turn the AVR5/AVR18RDS on.

12 6-Channel Direct Selector: Press this button to select the output of an optional, external 6-channel decoder connected to the **6 Ch Direct** inputs **18** as the listening source.

13 AM/FM : Press this button to select the tuner as the AVR5/ AVR18RDS's input source. When it is first pressed the last station tuned will be heard. Press it again to change between AM and FM bands.

14 Tuning Button: Press the left side of the button to tune lower frequency stations and the right side of the button to tune higher frequency stations. When a station with a strong signal is tuned, the **TUNED** indicator will illuminate in the **Information Display 30**. A brief (1/2 second) press of the button will manually tune to the next frequency increment, while pressing and holding the button for a longer period will automatically tune to the next station with a signal strong enough for acceptable reception.

15 Preset Scan: Press this button to automatically scan through the stations that have been programmed in the AVR5/ AVR18RDS's memory. The tuner will play five seconds of each station before moving to the next preset station. To stop the scan when the desired station is heard, press the button again.

16 Preset Stations Selector: Press this button to select stations that have been entered into the preset memory.

17 FM Mode: Press this button to select the stereo or mono mode for FM tuning. In the STEREO mode a **Stereo** indicator will illuminate in the **Information Display 30**, and stereo reception will be provided when stations are transmitting stereo signals. In the MONO mode the left and right signals from stereo broadcasts will be mixed together and reproduced through all channels. Select MONO for better reception of weak signals.

18 Dolby Pro Logic Selector: Press this button to select the Dolby Pro Logic surround mode when listening to an analog program that is encoded with surround-sound information.

19 Dolby 3 Stereo Selector: Press this button to select the Dolby 3 Stereo listening mode. This mode is used primarily when a program has surround information when a center channel speaker, but no surround speakers, is installed.

20 Analog Surround Mode Selectors: Press one of these buttons to select the analog surround modes. These modes may be used with any analog program source to create a pleasing surround effect.

21 Test Tone: Press this button to begin the sequence of steps used to set the AVR5/AVR18RDS output levels. When this button is pressed, a test tone will replace the currently selected listening source and the **Information Display 30** will show the channel where the test tone appears. The test tone will automatically switch to the next channel after three seconds.

22 Surround Off: Press this button to turn off all surround processing, and to listen to a program in traditional stereo from the left front and right front speakers only.

23 Mute: Press this button to momentarily silence the speaker output of the AVR5/ AVR18RDS.

24 Volume Control: Turn the knob clockwise to increase volume, counterclockwise to decrease the volume.

25 Set Button: This button has two functions. If this button is pressed while in normal operation, the **Information Display 30** will show the Surround mode for three seconds. This button is also used to enter an output level setting when using the **Test Tone** and **Selector Buttons 21 29**.

26 Delay: Press this button to enter delay time settings.

27 Channel Select: Press this button during normal operation, or during the Test Tone operation, to begin the process that adjusts the output levels.

NOTE: Be sure to select the Dolby Pro Logic surround mode before calibration so that all five channels will be adjusted.

28 Center Speaker Select Button: Press this button to select the center channel speaker. When it is first pressed, the **Information Display 30** will show the currently selected speaker type. Press it again to show another speaker type or no speaker option (this option is available with the Dolby Pro Logic surround mode only).

Release this button when a desired selection is shown in the **Information Display 30**.

29 Selector Buttons: Press these buttons to adjust the AVR5/AVR18RDS output levels. You may use these buttons while you are checking the output levels by pressing either the **Test Tone Button 21** or the **Channel Select Button 27**.

NOTE: Be sure to press the **Set Button 25** to enter a new output level each time you adjust the channel.

30 Information Display: This display delivers messages and status indications to help you operate the receiver.

31 Remote Sensor Window: The sensor behind this window receives infrared signals from the remote control. Aim the remote at this area and do not block or cover it unless an external remote sensor is installed.

Rear Panel Connections

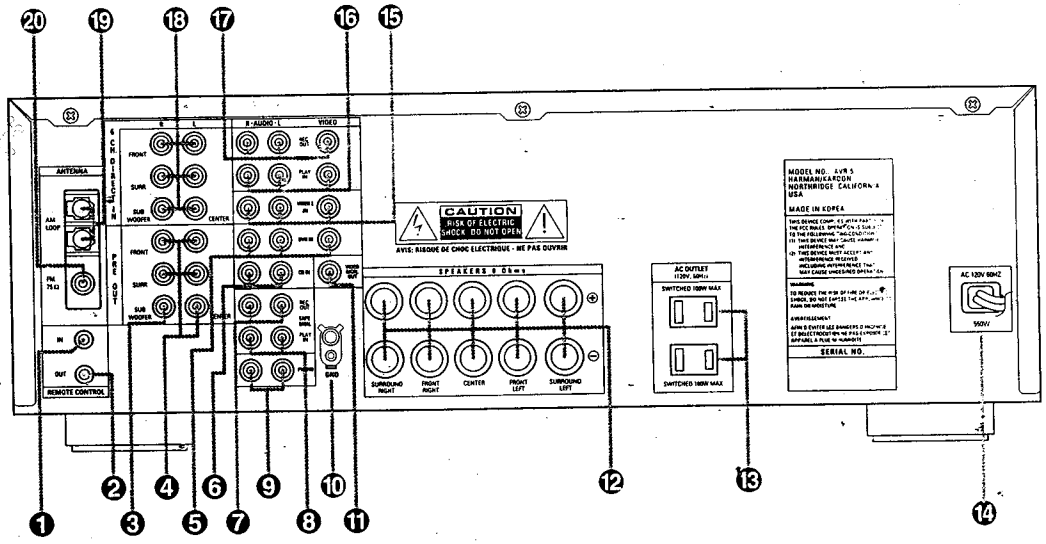

❶ Remote IR In: If the AVR5/AVR18RDS front panel IR sensor is blocked due to cabinet doors or other obstructions, an external IR sensor may be used. Connect the output of the sensor to this jack.

❷ Remote IR Out: This connection permits the IR sensor in the receiver to serve other remote controlled devices. Connect this jack to the "IR IN" jack on Harman Kardon or other compatible equipment.

❸ Subwoofer Pre-Out: Connect this jack to the line level input of a powered subwoofer. If an external subwoofer amplifier is used, connect this jack to the subwoofer amplifier input.

❹ Pre-Outs: If external power amplifiers are used for any channels, connect them to these jacks.

❺ DVD Inputs: Connect the analog audio outputs and composite video output of a DVD or LV player to these jacks.

❻ CD Inputs: Connect these jacks to the output of a compact disc player or CD changer.

❼ Tape Monitor Out: Connect these jacks to the RECORD/INPUT jacks of an audio recorder.

❽ Tape Monitor In: Connect these jacks to the PLAY/OUT jacks of an audio recorder.

❾ Phono Inputs: Connect the outputs of your turntable or tone arm to these jacks. Note that only Moving Magnet (MM) type cartridges may be used.

❿ Phono Ground: Connect the ground wire from a turntable to this terminal to reduce system hum.

⓫ TV Monitor Video Output: Connect this jack to the standard (composite) video input of a TV monitor or video projector to view the output of any standard video source selected by the receiver's video switcher.

⓬ Speaker Terminals: Connect these terminals to the appropriate terminals on your speakers.

⓭ Switched AC Outlets: These outlets may be used to power any device that you wish to have turn on when the unit is turned on with the **System Power Control** switch **2**.

NOTE: The power consumption of the device plugged into each of these outlets should not exceed 100 watts.

⓮ Power Cable: Connect the AC plug to a non-switched AC wall output

⓯ Video 2 Inputs: Connect these jacks to the audio and video outputs of a TV Tuner, Cable TV converter box, satellite receiver or any other audio/video source.

⓰ Video 1 Inputs: Connect these jacks to the audio and video PLAY/OUT jacks of a VCR.

⓱ Video Outputs 1: Connect these jacks to the audio and video RECORD/IN jacks of a VCR.

⓲ 6-Channel Direct Inputs: If an external digital audio decoder is used for 5.1 (Dolby Digital, DTS, etc.) audio, connect the outputs of that decoder to these terminals.

⓳ AM Antenna: Connect the AM loop antenna supplied with the receiver to these terminals. If an external AM antenna is used, make connections to the **AM** and **GND** terminals in accordance with the instructions supplied with the antenna.

⓴ FM Antenna: Connect an indoor or external FM antenna to this terminal.

Remote Control Functions

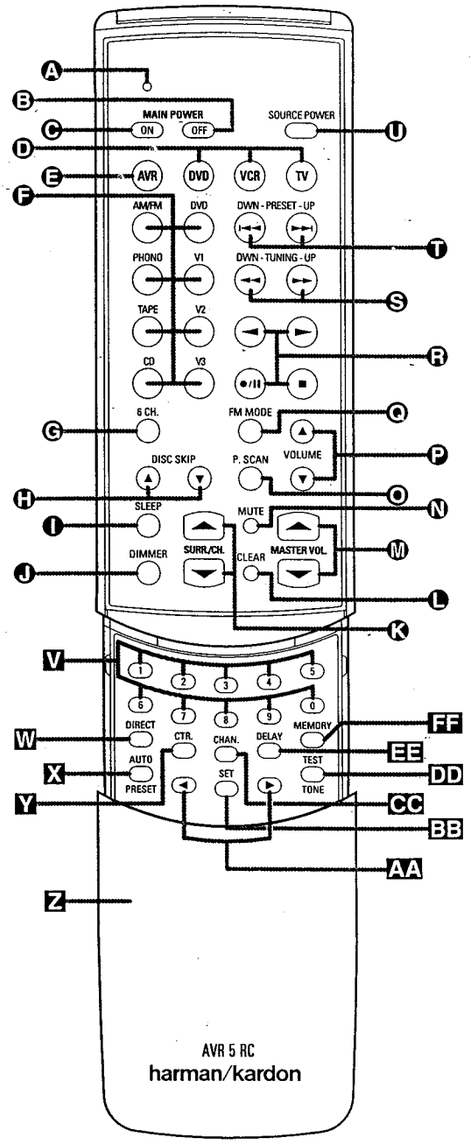

IMPORTANT NOTE: The AVR5/ AVR18RDS's remote may be programmed to control up to three additional devices, including the AVR5/ AVR18RDS. Before using the remote, it is important to remember to press the **Device Control Selector** button Ⓓ Ⓔ that corresponds to the unit you wish to operate. The remote is capable of operating a wide variety of products using the control codes that are part of the remote.

It is also important to remember that many of the buttons on the remote take on different functions, depending on the product selected using the Device Control Selectors. The descriptions shown here primarily detail the functions of the remote when it is used to operate the AVR5/ AVR18RDS.

Ⓐ **LED Indicator:** This indicator will flash whenever a button is pressed to confirm that a remote command is being transmitted. It will also flash while the remote is being programmed to assist in entering or reading remote codes. Note that this is NOT a standard remote button, and has no function when pressed.

Ⓑ **Main Power Off:** When the AVR5/ AVR18RDS is turned on, press this button to place it in the Standby mode. Note that in this condition, the unit is still connect to AC Power.

Ⓒ **Main Power On:** When the AVR5/ AVR18RDS is in the Standby mode, as indicated by the **Power Indicator** 3 glowing green, press this button to turn the AVR5 on.

Ⓓ **Device Control Selectors:** Press one of these buttons to use the remote to control the functions of another audio/video device. Note that the button will briefly turn red after it has been pressed to confirm your selection.

Ⓔ **AVR Selector:** Press this button to use the remote control for operation of the AVR5/AVR18RDS. Note that the button will briefly turn red after is has beep pressed to confirm your selection.

Ⓕ **Source Selectors:** Press these buttons to select an input source for the AVR5/ AVR18RDS. The AM/FM button is also used to switch between frequency bands when the tuner is in use.

NOTE: Pressing one of these buttons selects the source only. In order to control the actual source machine using the remote you must press the **Device Control Selector** button Ⓔ for the desired product.

Ⓖ **6-Channel Direct:** Press this button to use the output of an optional, external digital decoder as the AVR5/ AVR18RDS's input source.

Ⓗ **Disc Skip:** These buttons do not have any functions when controlling the AVR5/AVR18RDS, but they operate the Disc Skip functions of compatible Harman Kardon compact disc changers. The Disc Skip Up button will also function as the Open/Close button for certain DVD and LD equipment when the remote is properly programmed to control them.

Ⓘ **Sleep Button:** Press this button to place the unit in the Sleep mode. After the time shown in the display, the AVR5/ AVR18RDS will automatically go into the Standby mode. Each press of the button changes the time until turn-off in the following order:

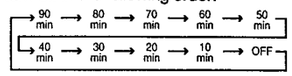

Ⓙ **Dimmer:** Press this button once to reduce the brightness of the front panel display to half the normal intensity. Press it again to turn the front panel display completely off. When the display is completely off, press the button to return to normal brightness.

Ⓚ **Surround/Channel Selectors:** Press these buttons to check or change the current Surround mode. When either one of these two buttons is first pressed, the **Information Display** 30 will show the current Surround mode. Press either button again to change the current Surround mode by scrolling the list of available modes as they appear in the **Information Display** 30. When the remote is being used to control a VCR or TV set, these buttons are used to change channels. These buttons are also used when the remote is being programmed to "find" the correct codes via the Search mode.

Ⓛ **Clear Button:** This button is used to clear preset memory information for the AVR5/ AVR18RDS's tuner.

Ⓜ **Master Volume:** Press these buttons to raise or lower the AVR5/AVR18RDS's volume. These button are also used to obtain the IR code numbers for a device that has been programmed into the remote.

Ⓝ **Mute:** Press this button to momentarily silence the AVR5/ AVR18RDS. When the AVR5/ AVR18RDS remote is being programmed to operate another device, this button is pressed with the **Device Control Selector** button Ⓓ to begin the programming process.

Ⓞ **P-Scan:** Press this button to automatically scan through the list of stations that are programmed into the AVR5/ AVR18RDS's tuner memory. When the button is pressed, each preset station will play for five seconds before the next station is selected. Press the button again when the desired station is heard to stop the preset scan.

Ⓟ **Volume:** When the remote has been properly programmed for a compatible device, these buttons may be used to raise of lower the volume of a TV. Note that they DO NOT change the volume of the AVR5/ AVR18RDS. That is done with the **Master Volume** button Ⓜ.

Ⓠ **FM Mode:** Press this button when the tuner is in use in the FM band to switch to monaural reception if the station is weak and noisy. When the **MONO** indicator is on, FM reception will be monaural regardless of the strength of the tuned FM station.

Ⓡ **Transport Controls:** These buttons are used to control Play, Play Forward, Play Reverse, Stop, Pause and Record functions on compatible Harman Kardon compact disc players/ changers and cassette tape decks. When the remote has been programmed to control an external device, such as a VCR, DVD or LD, these buttons may be used to control the standard Forward, Reverse, Stop and Pause functions, as well.

Ⓢ **Tuning Up/Down:** When the tuner is in use, these buttons will tune up or down through the selected frequency band. A brief (½ second) press of the button will manually tune to the next frequency increment, while pressing and holding the button for a longer period will automatically tune to the next station with a signal strong enough for acceptable reception. These buttons will also control Fast Forward and Fast Reverse (or Rewind) for compatible Harman Kardon compact disc players/ changers and cassette tape decks, as well as controlling these functions on a DVD or VCR, if the remote has been properly programmed.

Ⓣ **Preset Up/ Down:** When the tuner is in use, these buttons scroll through the stations that have been programmed into the AVR5/ AVR18RDS's memory. These buttons also control the track Skip Up and Down on compatible Harman Kardon compact disc players/ changers as well as controlling the similar functions on a DVD if the remote has been properly programmed.

Ⓤ **Source Power:** When the remote has been properly programmed to control another product, and the **Device Control Selector** Ⓓ for that device has been pressed, press this button to turn the product on or off.

Ⓥ **Numeric Keys:** These buttons serve as a ten-button numeric keypad to enter tuner preset positions. They are also to be used to select channel numbers when **TV** or **VCR** has been selected on the remote, or to select track numbers on a DVD player, depending on how the remote has been programmed.

Ⓦ **Direct:** Press this button to select a radio station by entering its frequency using the **Numeric Keys** Ⓥ.

Ⓧ **Auto Preset:** When the tuner and FM band have been selected, this button may be used to automatically program the tuner presets for all active stations. To start the auto preset scan, press and hold the button. Note that the **MEMO** and **PRESET** indicators will flash. After a few seconds, the tuner will start to "look" for active stations, as shown by increasing frequency numbers in the Information Display. Release the button and note that the tuner will briefly stop at each active station and add a preset number to the memory. If the FM tuner found less the 30 FM stations with acceptable signal strength, the Auto Preset tuning will scan two more cycles or until the remaining vacant preset memory spaces have been filled with those found in the first scan. The scan will stop when all 30 preset memory spaces have been filled or when three scans through the band have been completed.

Ⓨ **Center:** Use this button to configure the AVR5/ AVR18RDS for the type of center channel speaker being used.

Ⓩ **Secondary Control Cover:** This sliding cover normally is in the "up" position so that it hides the secondary controls. To access these controls, place your thumb on the small recessed area at the top center of the control, and gently press the cover down and towards you.

AA **◄/► Buttons:** These buttons are used to change settings during the level output adjustments with either the test tone or an external audio source.

BB **Set Button:** This button has two functions. If this button is pressed while in normal operation, the **Information Display** 30 will show the Surround mode for three seconds. This button is also used to enter an output level setting when using the **Test Tone** and **Selector** buttons 21 29.

CC **Channel Button:** Use this button to adjust the AVR5/ AVR18RDS's output levels using an external audio source, rather than the internal test signal generator. Each press of the button will select a channel for adjustment. To trim the output level use the ◄/► buttons

DD **Test Tone:** Press this button to start the procedure for adjusting the AVR5/ AVR18RDS's output levels.

EE **Delay:** Press this button to change the AVR5/ AVR18RDS's delay settings. To change the settings, first make certain that the Pro Logic mode has been selected. Then, each press of the button will change the delay setting in the following order.

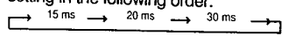

FF **Memory:** Press this button to open a memory position that stores a preset location for the AVR5/ AVR18RDS's tuner.

Remote Control Functions

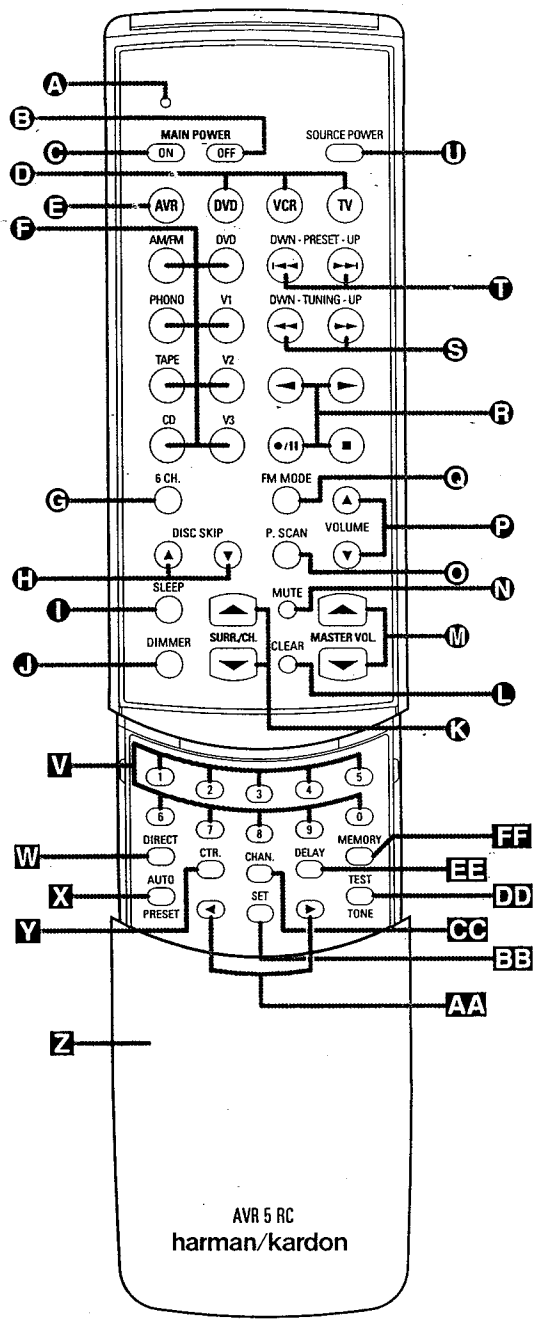

IMPORTANT NOTE: The AVR5/ AVR18RDS's remote may be programmed to control up to three additional devices, including the AVR5/ AVR18RDS. Before using the remote, it is important to remember to press the **Device Control Selector** button Ⓓ Ⓔ that corresponds to the unit you wish to operate. The remote is capable of operating a wide variety of products using the control codes that are part of the remote.

It is also important to remember that many of the buttons on the remote take on different functions, depending on the product selected using the Device Control Selectors. The descriptions shown here primarily detail the functions of the remote when it is used to operate the AVR5/ AVR18RDS.

Ⓐ **LED Indicator:** This indicator will flash whenever a button is pressed to confirm that a remote command is being transmitted. It will also flash while the remote is being programmed to assist in entering or reading remote codes. Note that this is NOT a standard remote button, and has no function when pressed.

Ⓑ **Main Power Off:** When the AVR5/ AVR18RDS is turned on, press this button to place it in the Standby mode. Note that in this condition, the unit is still connect to AC Power.

Ⓒ **Main Power On:** When the AVR5/ AVR18RDS is in the Standby mode, as indicated by the **Power Indicator** 3 glowing green, press this button to turn the AVR5 on.

Ⓓ **Device Control Selectors:** Press one of these buttons to use the remote to control the functions of another audio/video device. Note that the button will briefly turn red after it has been pressed to confirm your selection.

Ⓔ **AVR Selector:** Press this button to use the remote control for operation of the AVR5/AVR18RDS. Note that the button will briefly turn red after is has beep pressed to confirm your selection.

Ⓕ **Source Selectors:** Press these buttons to select an input source for the AVR5/ AVR18RDS. The AM/FM button is also used to switch between frequency bands when the tuner is in use.

NOTE: Pressing one of these buttons selects the source only. In order to control the actual source machine using the remote you must press the **Device Control Selector** button Ⓔ for the desired product.

Ⓖ **6-Channel Direct:** Press th button to use the output of an external digital decoder as the AVR18RDS's input source.

Ⓗ **Disc Skip:** These buttons have any functions when con the AVR5/AVR18RDS, but th operate the Disc Skip functio compatible Harman Kardon compact disc changers. The Skip Up button will also funct the Open/Close button for ce DVD and LD equipment wher remote is properly programm control them.

Ⓘ **Sleep Button:** Press this b place the unit in the Sleep moc the time shown in the display, AVR5/ AVR18RDS will automa go into the Standby mode. Eac of the button changes the time turn-off in the following order:

90 min → 80 min → 70 min → 60 min
40 min → 30 min → 20 min → 10 min

Ⓙ **Dimmer:** Press this butto to reduce the brightness of t panel display to half the norr intensity. Press it again to tur front panel display complete When the display is complet press the button to return to brightness.

Ⓚ **Surround/Channel Sele** Press these buttons to check change the current Surround When either one of these two is first pressed, the **Informati Display** 30 will show the cur Surround mode. Press either again to change the current Surround mode by scrolling of available modes as they a in the **Information Display** When the remote is being us control a VCR or TV set, thes tons are used to change cha These buttons are also used the remote is being program "find" the correct codes via t Search mode.

Ⓛ **Clear Button:** This button is clear preset memory informatic AVR5/ AVR18RDS's tuner.

Ⓜ **Master Volume:** Press thes buttons to raise or lower the AVR5/AVR18RDS's volume. button are also used to obtain code numbers for a device tha been programmed into the rcm

ct: Press this
tput of an optional,
der as the AVR5/
source.

se buttons do not
when controlling
DS, but they
kip functions of
Kardon
gers. The Disc
also function as
ton for certain
ment when the
programmed to

ress this button to
Sleep mode. After
e display, the
will automatically
mode. Each press
s the time until
ng order:

0 min → 60 min → 50 min
0 min → 10 min → OFF

this button once
tness of the front
If the normal
gain to turn the
completely off.
s completely off,
return to normal

nnel Selectors:
to check or
Surround mode.
these two buttons
Information,
w the current
ess either button
current
scrolling the list
as they appear
Display 30.
being used to
set, these but-
ange channels.
also used when
programmed to
odes via the

is button is used to
information for the
tuner.

Press these
wer the
volume. These
to obtain the IR
device that has
to the remote.

N Mute: Press this button to momentarily silence the AVR5/ AVR18RDS. When the AVR5/ AVR18RDS remote is being programmed to operate another device, this button is pressed with the **Device Control Selector** button **D** to begin the programming process.

O P-Scan: Press this button to automatically scan through the list of stations that are programmed into the AVR5/ AVR18RDS's tuner memory. When the button is pressed, each preset station will play for five seconds before the next station is selected. Press the button again when the desired station is heard to stop the preset scan.

P Volume: When the remote has been properly programmed for a compatible device, these buttons may be used to raise of lower the volume of a TV. Note that they DO NOT change the volume of the AVR5/ AVR18RDS. That is done with the **Master Volume** button **M**.

Q FM Mode: Press this button when the tuner is in use in the FM band to switch to monaural reception if the station is weak and noisy. When the **MONO** indicator is on, FM reception will be monaural regardless of the strength of the tuned FM station.

R Transport Controls: These buttons are used to control Play, Play Forward, Play Reverse, Stop, Pause and Record functions on compatible Harman Kardon compact disc players/ changers and cassette tape decks. When the remote has been programmed to control an external device, such as a VCR, DVD or LD, these buttons may be used to control the standard Forward, Reverse, Stop and Pause functions, as well.

S Tuning Up/Down: When the tuner is in use, these buttons will tune up or down through the selected frequency band. A brief (½ second) press of the button will manually tune to the next frequency increment, while pressing and holding the button for a longer period will automatically tune to the next station with a signal strong enough for acceptable reception. These buttons will also control Fast Forward and Fast Reverse (or Rewind) for compatible Harman Kardon compact disc players/ changers and cassette tape decks, as well as controlling these functions on a DVD or VCR, if the remote has been properly programmed.

T Preset Up/ Down: When the tuner is in use, these buttons scroll through the stations that have been programmed into the AVR5/ AVR18RDS's memory. These buttons also control the track Skip Up and Down on compatible Harman Kardon compact disc players/ changers as well as controlling the similar functions on a DVD if the remote has been properly programmed.

U Source Power: When the remote has been properly programmed to control another product, and the **Device Control Selector D** for that device has been pressed, press this button to turn the product on or off.

V Numeric Keys: These buttons serve as a ten-button numeric keypad to enter tuner preset positions. They are also to be used to select channel numbers when **TV** or **VCR** has been selected on the remote, or to select track numbers on a DVD player, depending on how the remote has been programmed.

W Direct: Press this button to select a radio station by entering its frequency using the **Numeric Keys V**.

X Auto Preset: When the tuner and FM band have been selected, this button may be used to automatically program the tuner presets for all active stations. To start the auto preset scan, press and hold the button. Note that the **MEMO** and **PRESET** indicators will flash. After a few seconds, the tuner will start to "look" for active stations, as shown by increasing frequency numbers in the Information Display. Release the button and note that the tuner will briefly stop at each active station and add a preset number to the memory. If the FM tuner found less the 30 FM stations with acceptable signal strength, the Auto Preset tuning will scan two more cycles or until the remaining vacant preset memory spaces have been filled with those found in the first scan. The scan will stop when all 30 preset memory spaces have been filled or when three scans through the band have been completed.

Y Center: Use this button to configure the AVR5/ AVR18RDS for the type of center channel speaker being used.

Z Secondary Control Cover: This sliding cover normally is in the "up" position so that it hides the secondary controls. To access these controls, place your thumb on the small recessed area at the top center of the control, and gently press the cover down and towards you.

AA ◀/▶ Buttons: These buttons are used to change settings during the level output adjustments with either the test tone or an external audio source.

BB Set Button: This button has two functions. If this button is pressed while in normal operation, the **Information Display 30** will show the Surround mode for three seconds. This button is also used to enter an output level setting when using the **Test Tone** and **Selector** buttons **21 29**.

CC Channel Button: Use this button to adjust the AVR5/ AVR18RDS's output levels using an external audio source, rather than the internal test signal generator. Each press of the button will select a channel for adjustment. To trim the output level use the ◀/▶buttons

DD Test Tone: Press this button to start the procedure for adjusting the AVR5/ AVR18RDS's output levels.

EE Delay: Press this button to change the AVR5/ AVR18RDS's delay settings. To change the settings, first make certain that the Pro Logic mode has been selected. Then, each press of the button will change the delay setting in the following order.

→ 15 ms → 20 ms → 30 ms →

FF Memory: Press this button to open a memory position that stores a preset location for the AVR5/ AVR18RDS's tuner.

CIRCUIT DESCRIPTION

CPU(IC701): μPD780204GF

1. Pin Description & Block Diagram

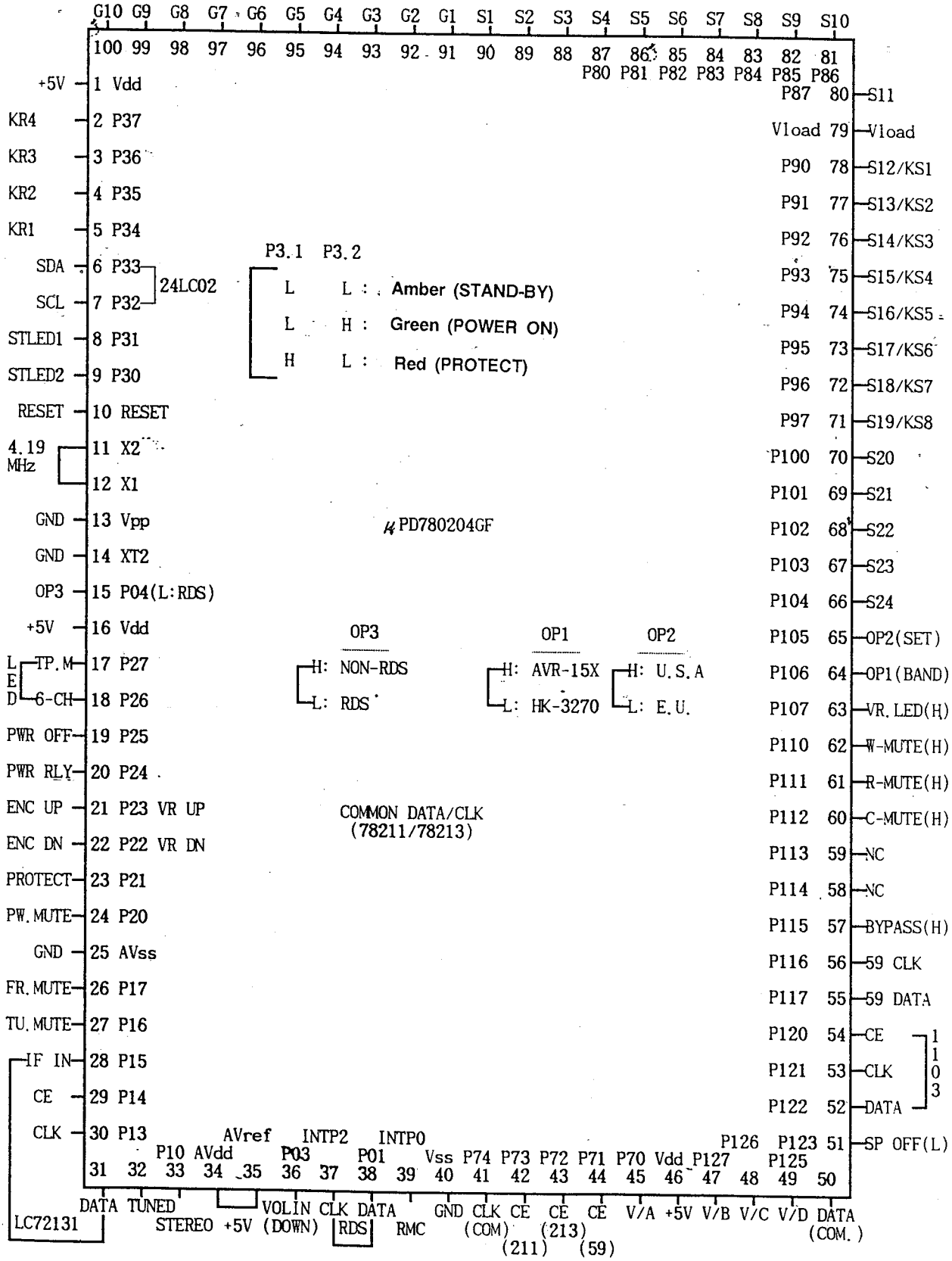

2. Input and Output Terminal Functions

< CPU PIN DISCRIPTION >

μPD780204GF QFP TYPE

PIN NO	PIN NAME	I/O	ACTIVE	PORT NAME	R E M A R K
1	Vdd	-	H	+5 V	SYSTEM POWER SUPPLY
2	P37	I	H	KR4	KEY READ 4
3	P36	I	H	KR3	KEY READ 3
4	P35	I	H	KR2	KEY READ 2
5	P34	I	H	KR1	KEY READ 1
6	P33	I/O	H	SDA	EEPROM DATA ┐24LC02
7	P32	O	H	SCL	EEPROM CLOCK┘
8	P31	O	H/L	PWR LED1	L Amber┐ L Green ┐H Red ┐
9	P30	O	H/L	PWR LED2	L STBY┘ H POWER┘L PROT┘
10	RESET	I	L	SYSTEM RESET	LOW RESET
11	X2	-	-	┐MAIN OSC.	MAIN SYSTEM OSCILLATION
12	X1	I	-	┘4.19MHz	
13	Vpp	-	L	connect to Vss	PROM WRITING
14	XT2	-	-	OPEN	NOT USED
15	P04	I	L	OP3	OPTION "L": RDS
16	Vdd	-	H	+5 V	SYSTEM POWER SUPPLY
17	P27	O	H	TAPE/M LED	TAPE MONITOR LED
18	P26	O	H	6-CH LED	6-CHANNEL LED
19	P25	I	L	POWER OFF	POWER OFF: "L"
20	P24	O	H	POWER RELAY	POWER ON: "H"
21	P23	I/O	H/L	ENCODER/VR.UP	┐AVR5/18: ENCODER IN
22	P22	I/O	H/L	ENCODER/VR.DN	┘HK3270 : VOLUME OUTPUT
23	P21	I	L	PROTECT	PROTECT DETECT IN : "L"
24	P20	O	L	POWER MUTE	MUTE ON: "L"
25	AVss	-	L	GND	A/D GND
26	P17	O	L	F_MUTE	MUTE ON: "L"
27	P16	O	H	T_MUTE	MUTE ON: "H"
28	P15	I	H/L	IF IN	IF COUNTER IN (LC7218)
29	P14	O	H	PLL CE	PLL CHIP ENABLE (LC7218)
30	P13	O	H	PLL CLK	PLL CLOCK (LC7218)
31	P12	O	H	PLL DATA	PLL DATA (LC7218)
32	P11	I	L	TUNED	TUNED IN ON: "L"

PIN NO	PIN NAME	I/O	ACTIVE	PORT NAME	REMARK
33	P10	I	L	STEREO	STEREO IN ON: "L"
34	AVdd	-	H	+5 V	A/D Vdd
35	AVref	I	L	GND	A/D GND
36	INTP3	I	L	ENC IN(DOWN)	ENCODER IN (DOWN)
37	INTP2	I	L	CLK ┐RDS	RDS CLOCK. IN "L"
38	P01	I	H	DATA┘	RDS DATA IN
39	INTP0	I	L	REMOCON IN	REMOCON IN
40	Vss	-	L	GND	SYSTEM GND
41	P74	O	H	CLK (COMMON)	COMMON CLOCK(7821-1/-3)
42	P73	O	H	CE (7821-1)	CHIP ENABLE(7821-1)
43	P72	O	H	CE (7821-3)	CHIP ENABLE(7821-3)
44	P71	O	H	CE (9459)	VOLUME IC CHIP ENABLE(9459)
45	P70	O	H/L	VID A	VIDEO CONTROL A
46	Vdd	-	H	+5 V	POWER SUPPLY
47	P127	O	H/L	VID B	VIDEO CONTROL B
48	P126	O	H/L	VID C	VIDEO CONTROL C
49	P125	O	H/L	VID D	VIDEO CONTROL D
50	P124	O	H	DATA(COMMON)	COMMON DATA(7821-1/-3)
51	P123	I	L	SP OFF	SPEAKER OFF: "L"
52	P122	O	H	DATA(1103)	DOLBY IC.1103 DATA
53	P121	O	L	CLK (1103)	CLOCK
54	P120	O	L	CE (1103)	CHIP ENABLE
55	P117	O	H	DATA(9459)	VOLUME IC.TC9459 DATA
56	P116	O	H	CLK (9459)	CLOCK
57	P115	O	H	BYPASS(1103)	DOLBY IC. 1103 BYPASS: "H"
58	P114	O	-	REMAINED	REMAINED
59	P113	O	-	REMAINED	REMAINED
60	P112	O	L	C_MUTE	CENTER MUTE ON: "L"
61	P111	O	L	R_MUTE	REAR MUTE ON: "L"
62	P110	O	L	W_MUTE	WOOFER MUTE ON: "L"
63	P107	O	H	VR.LED	VOLUME LED ON: "H"
64	P106	O	L/H	OP1	H:USA BAND, L: EU. BAND
65	P105	O	L/H	OP2	H:AVR5/18 , L: HK3270
66	FIP33	O	H	S24	FIP SEGMENT OUTPUT
67	FIP32	O	H	S23	|
68	FIP31	O	H	S22	|
69	FIP30	O	H	S21	|

PIN NO	PIN NAME	I/O	ACTIVE	PORT NAME	REMARK
70	FIP29	O	H	S20	FIP SEGMENT OUTPUT
71	FIP28	O	H	S19/KS8	FIP SEG19/KEY SCAN 8
72	FIP27	O	H	S18/KS7	18/KEY SCAN 7
73	FIP26	O	H	S17/KS6	17/KEY SCAN 6
74	FIP25	O	H	S16/KS5	16/KEY SCAN. 5
75	FIP24	O	H	S15/KS4	15/KEY SCAN 4
76	FIP23	O	H	S14/KS3	14/KEY SCAN 3
77	FIP22	O	H	S13/KS2	13/KEY SCAN 2
78	FIP21	O	H	S12/KS1	12/KEY SCAN 1
79	Vload	-	-	Vload	FIP DRIVER VOLTAGE
80	FIP20	O	H	S11	FIP SEGMENT OUTPUT
81	FIP19	O	H	S10	
82	FIP18	O	H	S9	
83	FIP17	O	H	S8	
84	FIP16	O	H	S7	
85	FIP15	O	H	S6	
86	FIP14	O	H	S5	
87	FIP13	O	H	S4	
88	FIP12	O	H	S3	
89	FIP11	O	H	S2	
90	FIP10	O	H	S1	
91	FIP9	O	H	G1	FIP GRID OUTPUT
92	FIP8	O	H	G2	
93	FIP7	O	H	G3	
94	FIP6	O	H	G4	
95	FIP5	O	H	G5	
96	FIP4	O	H	G6	
97	FIP3	O	H	G7	
98	FIP2	O	H	G8	
99	FIP1	O	H	G9	
100	FIP0	O	H	G10	

3. KEY MATRIX IN THE CPU (Front Panel)

	P34/KR1 (IC701 Pin5)	P35/KR2 (IC701 Pin4)	P36/KR3 (IC701 Pin3)	P37/KR4 (IC701 Pin2)
	DELAY 8010	SP CHANNEL 8020	CENTER MODE 8040	<< SET(&) 8080
S19/KS8 P97 (IC701 Pin71)	SET 4010	SET >>(&) 4020	MUTE /*MUTE 4040	SURR OFF 4080
S18/KS7 P96 (IC701 Pin72)	TEST TONE 2010	THEATER 2020	HALL2 2040	HALL1 2080
S17/KS6 P95 (IC701 Pin73)	3 STEREO 1010	PRO.LOGIC 1020	FM MODE /*FM MODE 1040	PRE UP(&) /*PRE UP(&) 1080
S16/KS5 P94 (IC701 Pin74)	PRE DOWN(&)/ *PRE DOWN (*) 0810	PRE SCAN /*PRE SCAN 0820	TUNNING UP /*TUNNING UP 0840	TUNNING DN(&) /*TUNN- DN(&) 0880
S15/KS4 P93 (IC701 Pin75)	AM / FM /*FM 0410	6-CH /*AM 0420	VIDEO3 0440	VIDEO2 0480
S14/KS3 P92 (IC701 Pin76)	VIDEO1/ *AUX 0210	DVD /*TAPE2 0220	CD /*CD 0240	TAPE MON /*TAPE MON 0280
S13/KS2 P91 (IC701 Pin77)	ST-BY/ *ST-BY 0110	PHONO/ *PHONO 0120	PTY /*PTY 0140	DISPLAY /*DISPLAY 0180
S12/KS1 P90 (IC701 Pin78)				

*: HK-3270
&: KEY

REMOTY	DIMMER (A010)	SURR DOWN (A020)	SURR UP (A040)	AUTO PRESET(A080)
	MEMORY (B010)	DIRECT (B020)	VR. UP (B040)	VR. DOWN (B080)
	PWR ON (C010)	PWR OFF (C020)	SLEEP (C040)	CLEAR (C080)
	NO. 1 (D010)	NO. 2 (D020)	NO. 3 (D040)	NO. 4 (D080)
	NO. 5 (E010)	NO. 6 (E020)	NO. 7 (E040)	NO. 8 (E080)
	NO. 9 (F010)	NO. 0 (F020)	AUX (F040)	TAPE2 (F080)

4. TIMING CHART (IF COUNT)

① PLL MODE-1
② PLL MODE-2
③ PLL MODE-3
④ PLL MODE-4
⑤ PLL MODE-5
⑥ PLL MODE-6

A dotted line (·····) : In case that IF COUNT is not proper, follow PLL MODE of ④, ⑤, ⑥.

- When changing BAND, selecting the PRESET STATIONS using TEN KEY and selecting the PRESET STATIONS using PRESET CHANNEL UP/DOWN.

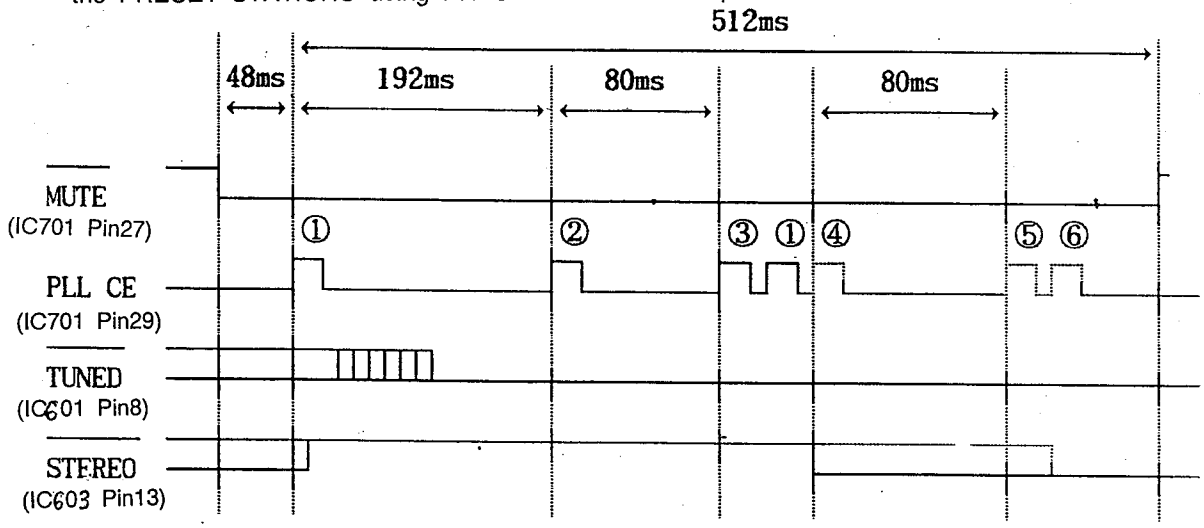

When IF COUNT is not proper in case that the frequency is not tuned,

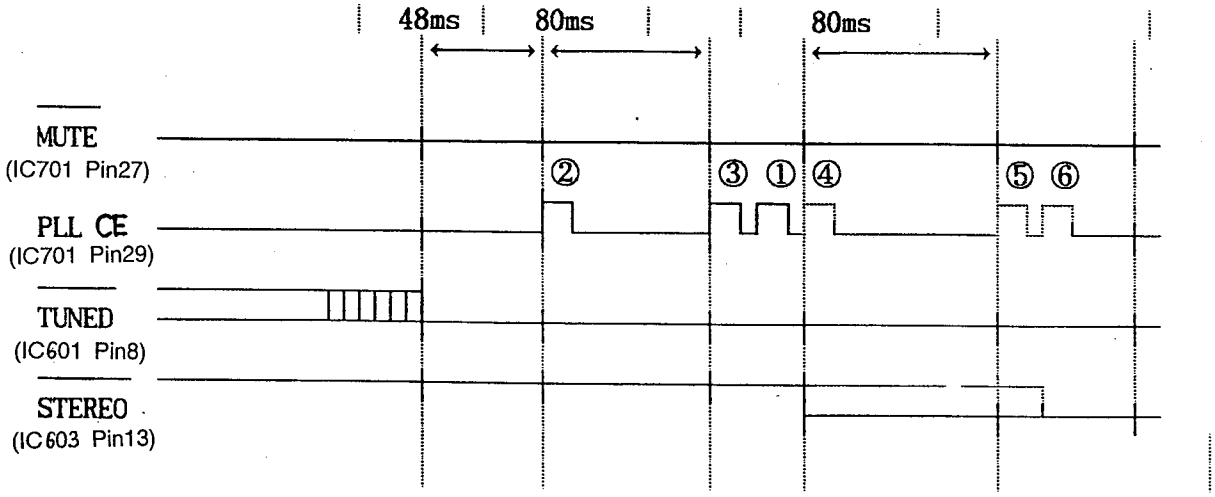

- MANUAL TUNING UP/DOWN

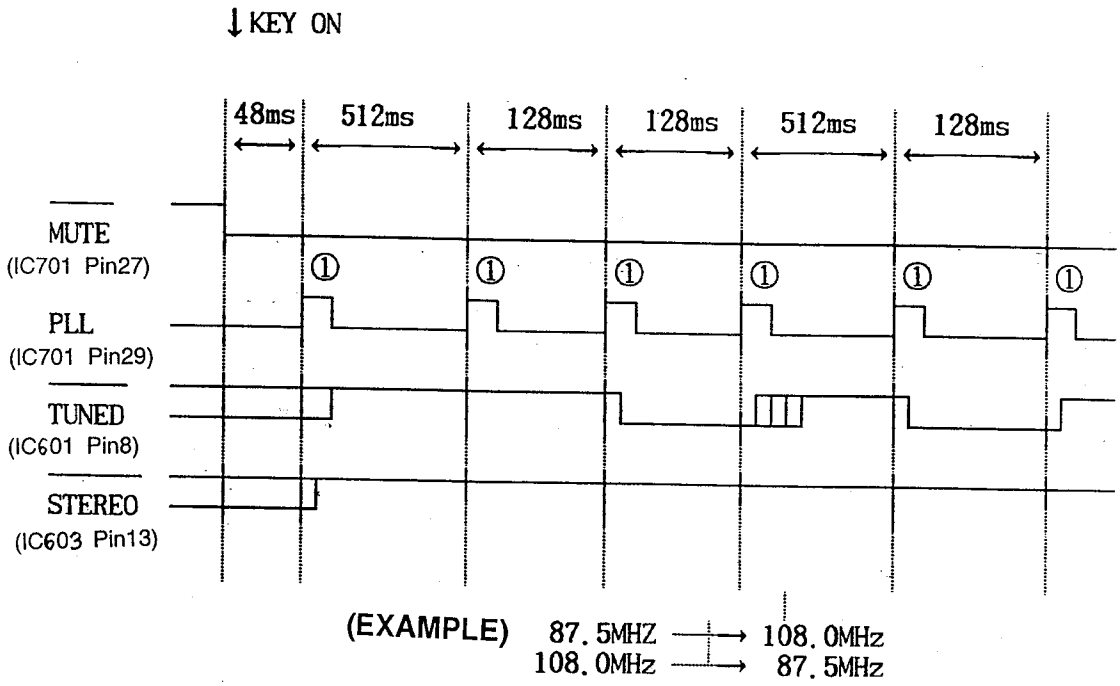

- MANUAL TUNING UP/DOWN key OFF

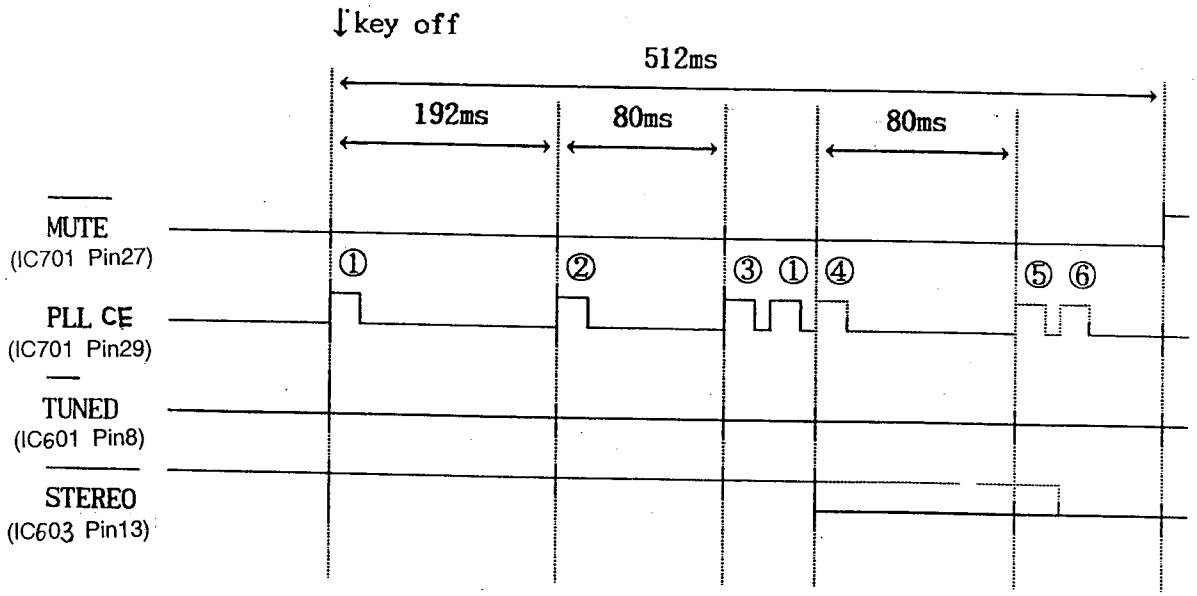

- POWER ON

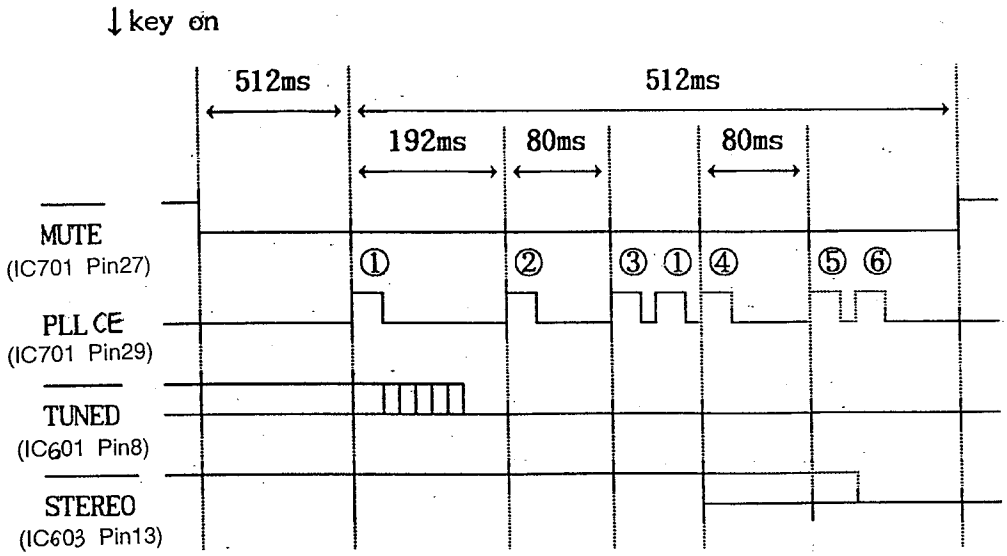

- AUTO TUNING UP/DOWN

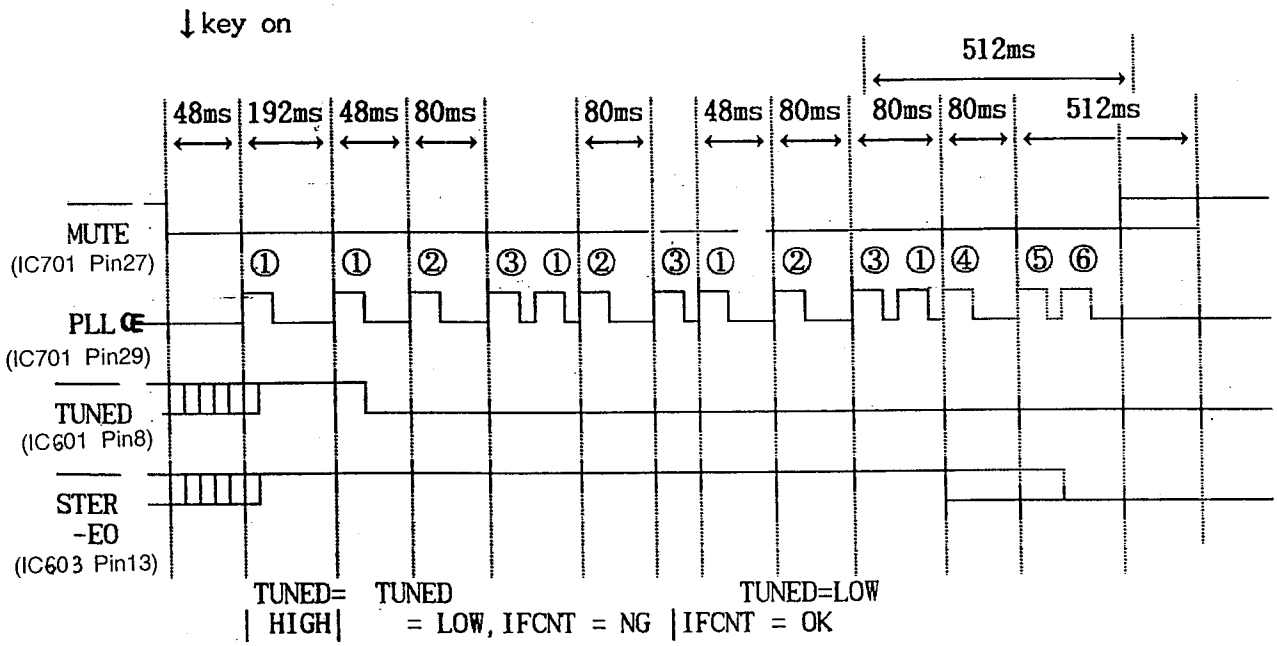

5. Protection Circuits

SPEAKER PROTECTION CIRCUIT

The CPU protects both this unit and the speakers when an abnormally high current flows in Q125, Q126, Q155, Q173 and Q127, Q128, Q157, Q158, Q174 due to excessive input drive, too low of a load impedance, or short of the speaker terminals. If current increase is excessive the voltage across R161, R162, R241, R291, R242 turns on Q129, Q130, Q159, Q160, Q175 then Q6 turns on Q3.

It makes the protection port of the CPU to low state.

Then all channels are muted and the display is turned off.

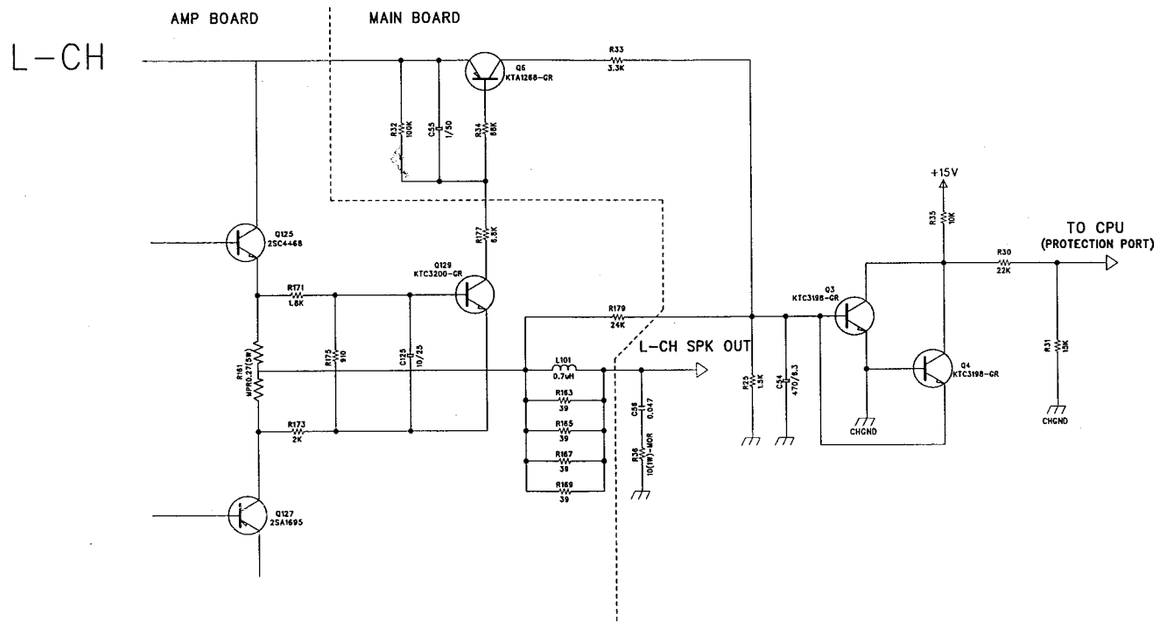

5. Protection Circuits

SPEAKER PROTECTION CIRCUIT

The CPU protects both this unit and the speakers v
Q125, Q126, Q155, Q173 and Q127, Q128, Q157, Q
too low of a load impedance, or short of the speaker
the voltage across R161, R162, R241, R291, R242 tu
then Q6 turns on Q3.
It makes the protection port of the CPU to low state.
Then all channels are muted and the display is turned

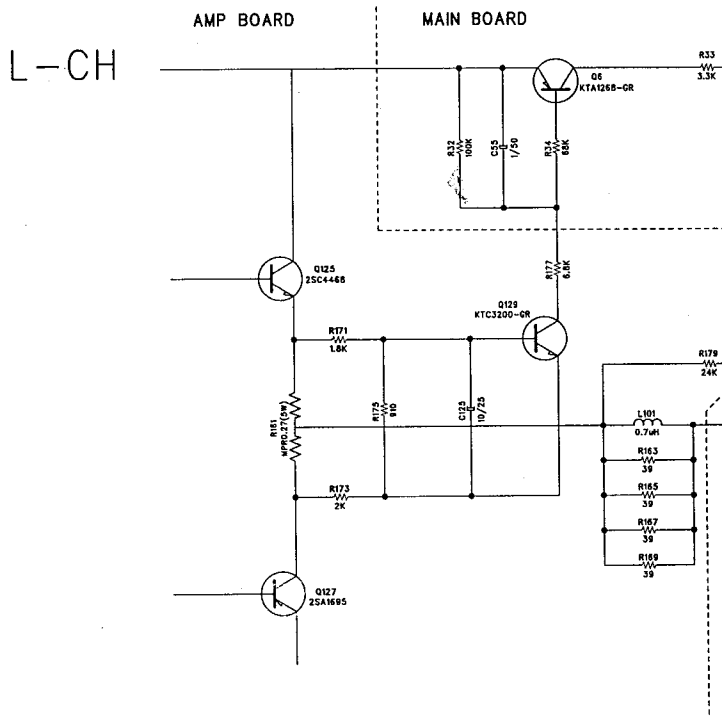

eakers when an abnormally high current flows in
Q157, Q158, Q174 due to excessive input drive,
speaker terminals. If current increase is excessive
R242 turns on Q129, Q130, Q159, Q160, Q175

state.
s turned off.

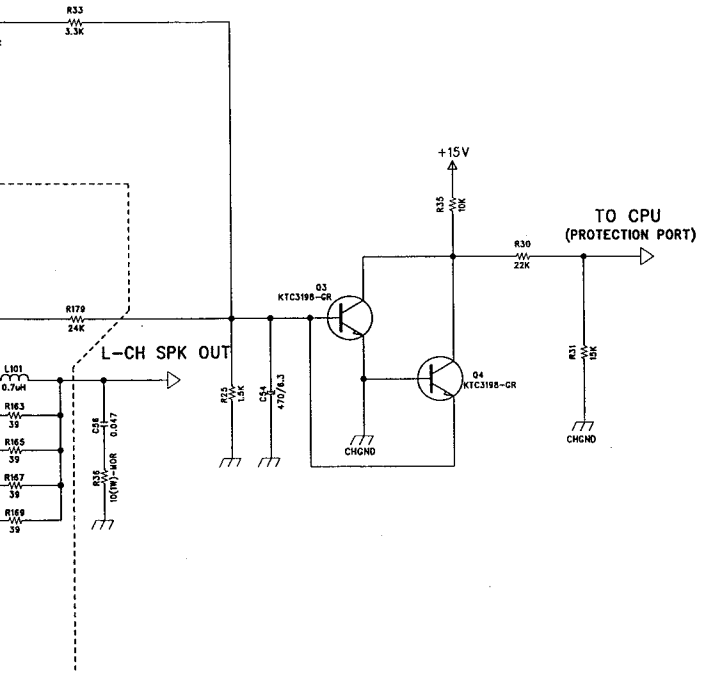

THERMAL PROTECTION CIRCUIT

This receiver has a overload thermal protection circuits to guard against abnormal operation. When the temperature of H/SINK POSISTOR rises abnormally, resistance of the posistor becomes larger and Q3 is turned on.

It makes the protection port of the CPU to low state. Then all channels are muted and the display is off.

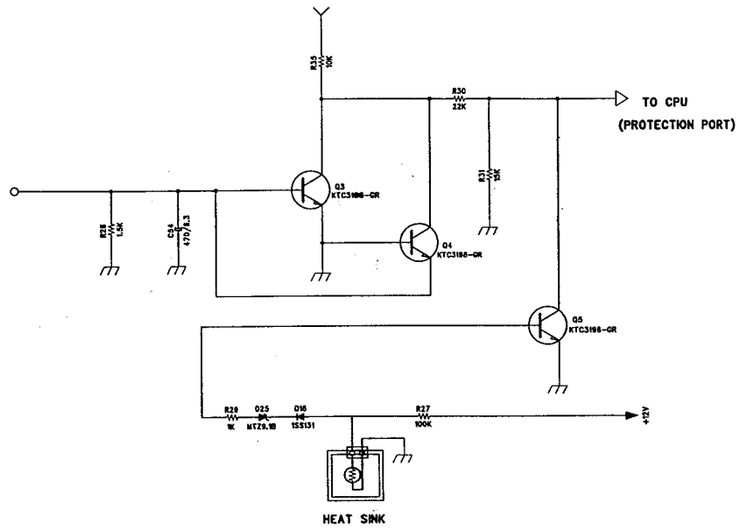

THERMAL PROTECTION CIRCUIT

This receiver has a overload thermal protection circuits
When the temperature of H/SINK POSISTOR rises ab
becomes larger and Q3 is turned on.
It makes the protection port of the CPU to low state. T
display is off.

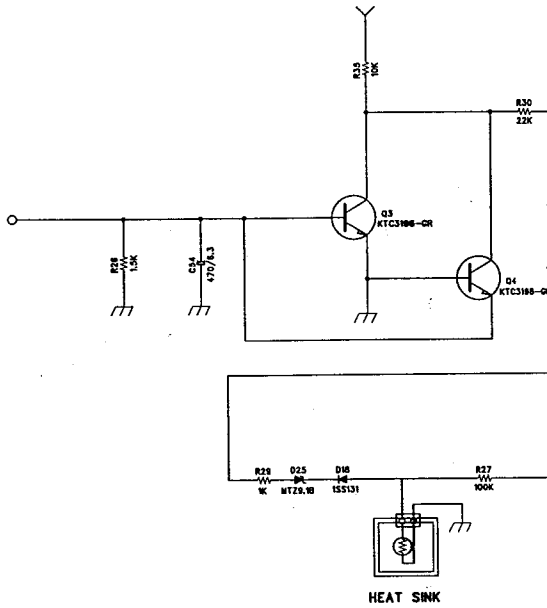

ircuits to guard against abnormal operation.
ses abnormally, resistance of the posistor

state. Then all channels are muted and the

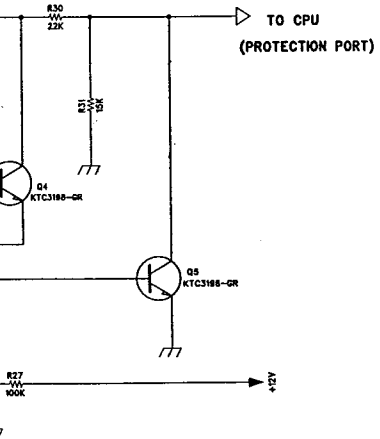

BLOCK DIAGRAM

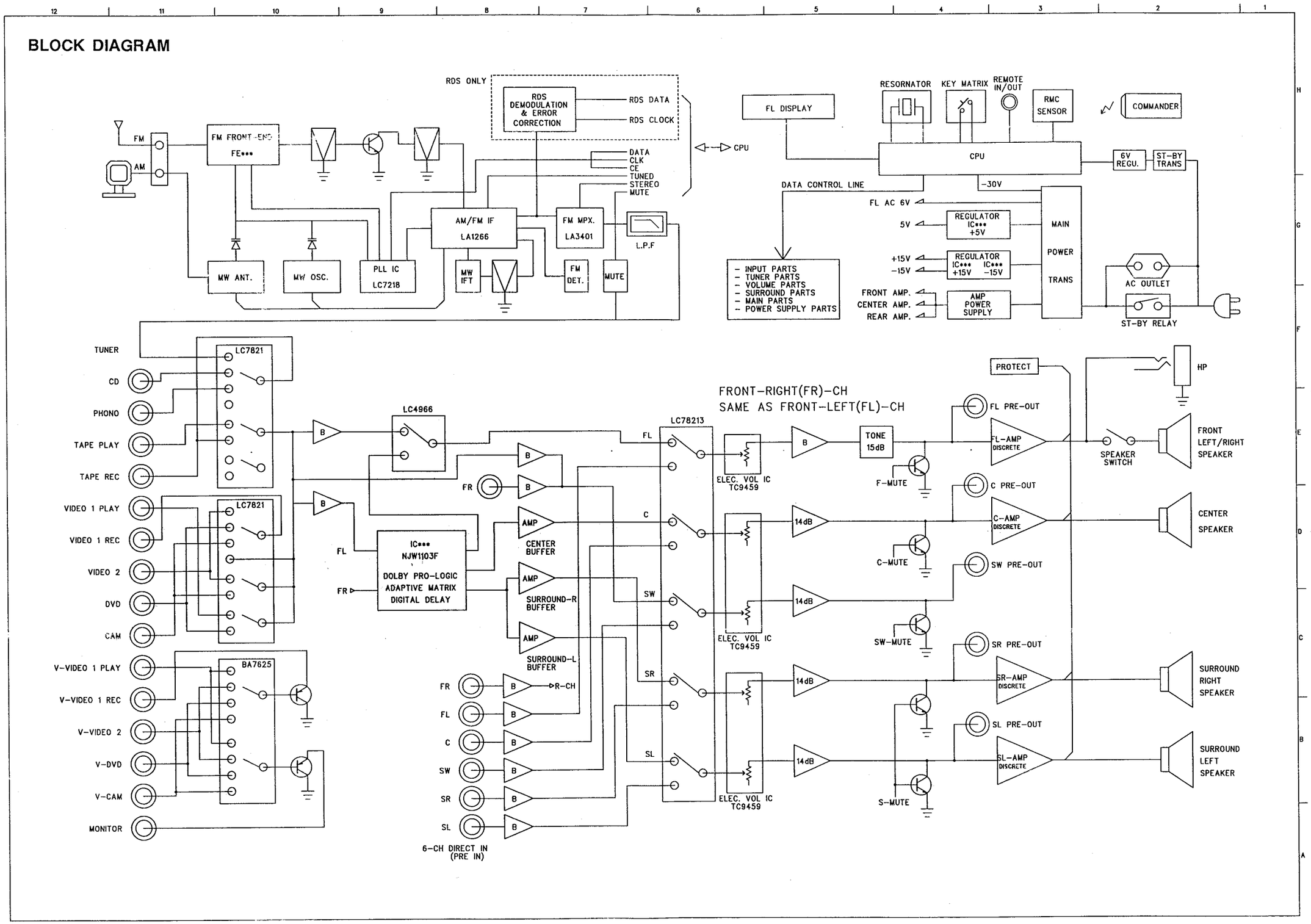

BLOCK DIAGRAM

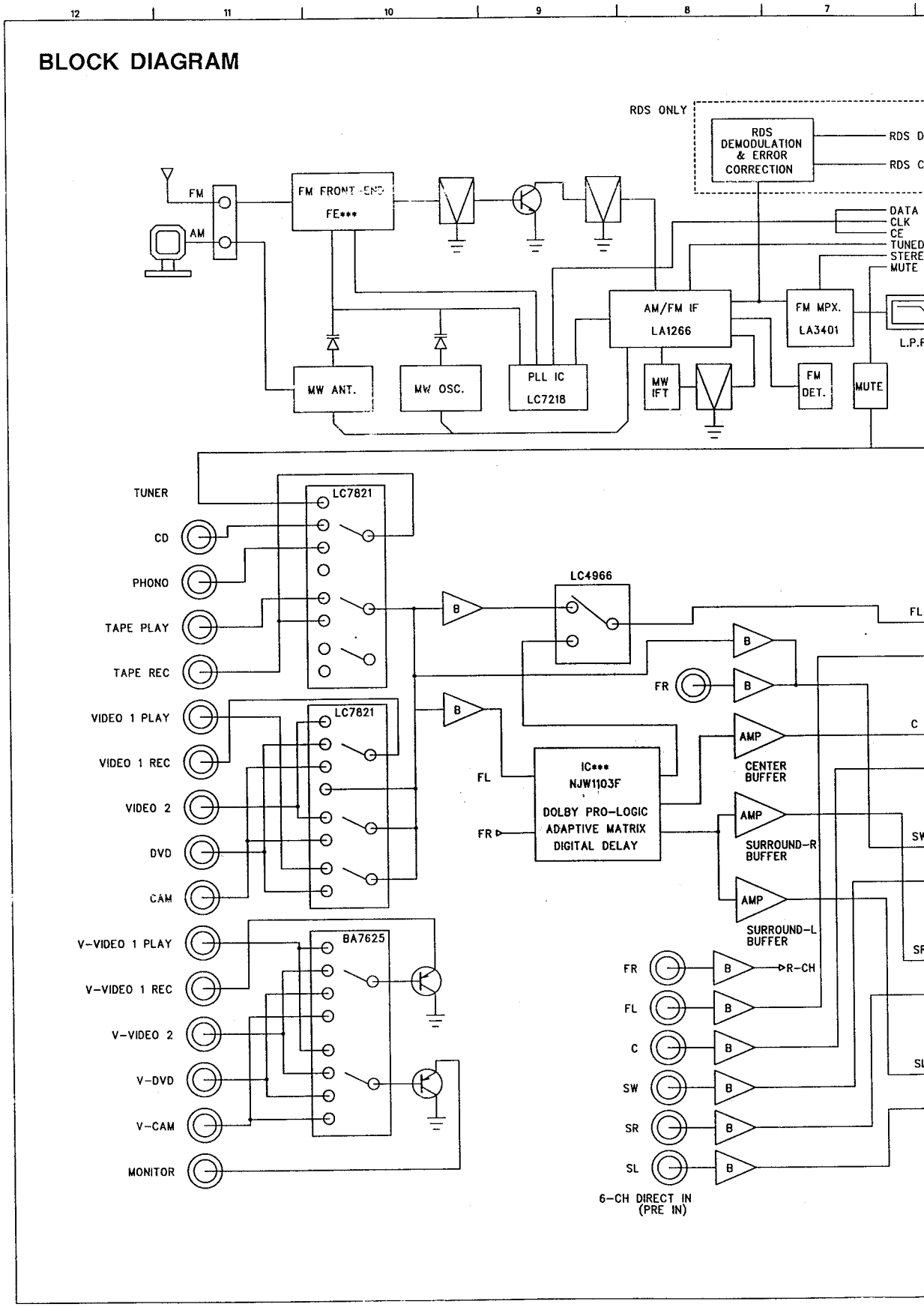

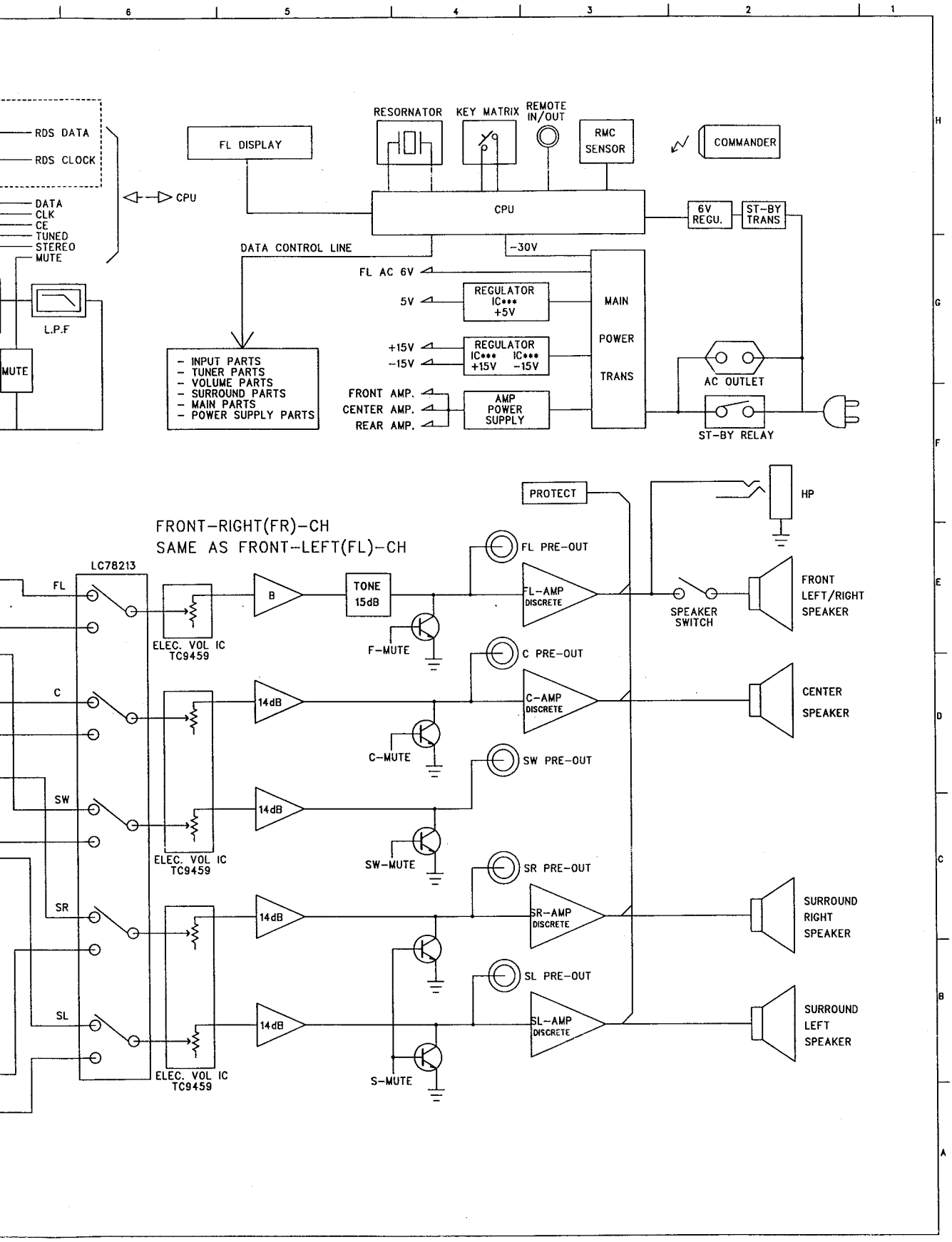
RDS DATA
RDS CLOCK
DATA
CLK
CE
TUNED
STEREO
MUTE
CPU
L.P.F
MUTE
FL DISPLAY
RESORNATOR
KEY MATRIX
REMOTE IN/OUT
RMC SENSOR
COMMANDER
CPU
6V REGU.
ST-BY TRANS
DATA CONTROL LINE
-30V
FL AC 6V
5V
REGULATOR IC*** +5V
+15V
-15V
REGULATOR IC*** +15V IC*** -15V
FRONT AMP.
CENTER AMP.
REAR AMP.
AMP POWER SUPPLY
MAIN POWER TRANS
AC OUTLET
ST-BY RELAY
- INPUT PARTS
- TUNER PARTS
- VOLUME PARTS
- SURROUND PARTS
- MAIN PARTS
- POWER SUPPLY PARTS
PROTECT
HP
FRONT-RIGHT(FR)-CH
SAME AS FRONT-LEFT(FL)-CH
LC78213
FL
C
SW
SR
SL
ELEC. VOL IC TC9459
B
TONE 15dB
F-MUTE
14dB
C-MUTE
SW-MUTE
S-MUTE
FL PRE-OUT
C PRE-OUT
SW PRE-OUT
SR PRE-OUT
SL PRE-OUT
FL-AMP DISCRETE
C-AMP DISCRETE
SR-AMP DISCRETE
SL-AMP DISCRETE
SPEAKER SWITCH
FRONT LEFT/RIGHT SPEAKER
CENTER SPEAKER
SURROUND RIGHT SPEAKER
SURROUND LEFT SPEAKER

DISASSEMBLY PROCEDURES

(Refer to pages 25 ~ 29)

[1] CHASSIS TOP <㉟> REMOVAL

Remove 9 screws <Ⓐ,Ⓗ> and then remove the Chassis Top< ㉟>.

[2] FRONT PANEL ASS'Y <AA> REMOVAL

1. Remove the Chassis Top <㉟ >, referring to the previous step [1].
2. Disconnect the connector <CN701> from connector <CW10> on the Main P. C. Board<Ⓘ>.
3. Disconnect the lead wire <CW701> from connector <CW 17> on the Main P.C. Board <Ⓘ>.
4. Disconnect the lead wire <CW 706> from connector <CN 902> on the Video P.C. Board <ⓝ>.
5. Disconnect the lead wire <CW 706> from connector <CN 403> on the Input P.C. Board <ⓜ>.
6. Remove 1 screw <Ⓘ> of Chassis Panel and then lead wire <CH 702> on the Tone P.C. Board <Ⓒ>.
7. Disconnect the lead wire <CW 705> from connector <CN 803> on the Pre Out P.C. Board <Ⓓ>.
8. Disconnect the lead wire <CN 709> from connector <CN 102> on the Amp P.C. Board <Ⓘ>.
9. Disconnect the lead wire <CN 708> from connector <CW 4> on the Main P.C. Board <Ⓘ>.
10. Remove 1 screw <Ⓘ> of the Chassis Panel and then lead wire <CH 703> on the Speaker P.C. Board <ⓔ>.
11. Disconnect the connector <CW 19> from connector <CW 2> on the Main P.C. Board <Ⓘ>.
12. Remove 9 screws <Ⓒ,Ⓘ,Ⓗ> and then remove the Front Panel Ass'y <AA>.

[3] FRONT P. C. BOARD <ⓗ> REMOVAL

1. Remove the Chassis Top <㉟>, referring to the previous step [1].
2. Remove the Front Panel Ass'y <AA>, referring to the previous step [2].
3. Disconnect the connector <CN702> from lead wire <CW702> on the Power P. C. Board<ⓕ>.
4. Disconnect the lead wire <CW704> from connector <CN704> on the Volume P. C. Board <ⓓ>.
5. Disconnect the lead wire <CW703> from connector <CN703> on the Mute P. C. Board <ⓐ>.
6. Remove 13 screws <Ⓙ> and then remove the Front P.C. Board <ⓗ>.

[4] VOLUME P.C. BOARD <ⓓ> REMOVAL

1. Remove the Chassis Top <㉟>, referring the previous step [1].
2. Remove the Front Panel Ass'y <AA>, referring to the previous step [2].
3. Pull out the Volume knob <Ⓘ>.
4. Disconnect the lead wire <CN704> from lead wire <CW704> on the Front P. C. Board<ⓗ>.
5. Remove 1 hexagon nut <②>, 1 washer <③> and then remove the volume P. C. Board <ⓓ>.

[5] MUTE P.C. BOARD <ⓐ> REMOVAL

1. Remove the Chassis Top<㉟>, referring to the previous step [1].
2. Remove the Front Panel Ass'y <AA>, referring to the previous step [2].
3. Disconnect the connector <CN703> from lead wire <CW703> on the Front P. C. Board<ⓗ>.
4. Remove 2 screws <Ⓙ> and then remove the Mute P.C. Board<ⓐ>.

[6] VIDEO 2 P. C. BOARD <ⓑ> REMOVAL

1. Remove the Chassis Top<㉟ >, referring to the previous step [1].
2. Remove the Front Panel Ass'y <AA>, referring to the previous step [2].
3. Remove 2 screws <Ⓙ> and then remove the Video 2 P.C. Board<ⓑ>.
4. Pull out the shield Video<⑧>.

[7] TONE P. C. BOARD <Ⓒ> REMOVAL

1. Remove the Chassis Top<㉟>, referring to the previous step [1].
2. Remove the Front Panel Ass'y <AA>, referring to the previous step [2].
3. Pull out the Balance knob<⑤>.
4. Remove 4 screws <Ⓙ> and then remove the Tone P.C. Board Ass'y <AC>.
5. Remove 4 hexagon nut <②>,and then remove the Shield Balance<⑨>.

8 SPEAKER P. C. BOARD <ⓔ> REMOVAL

1. Remove the Chassis Top<㉟>, referring to the previous step 1.
2. Remove the Front Panel Ass'y <AA>, referring to the previous step 2.
3. Remove 3 screws <Ⓔ, Ⓘ> and then remove the Speaker P.C. Board<ⓔ>.

9 POWER P. C. BOARD <ⓕ> REMOVAL

1. Remove the Chassis Top<㉟>, referring to the previous step 1.
2. Remove the Front Panel Ass'y <AA>, referring to the previous step 2.
3. Disconnect the lead wire <CW702> from connector <CN702> on the Front P. C. Board<ⓗ>.
4. Remove 2 screws <Ⓘ> and then remove the Power P.C. Board<ⓕ>.

10 STANDBY P. C. BOARD <ⓖ> REMOVAL

1. Remove the Chassis Top<㉟>, referring to the previous step 1.
2. Remove the Front Panel Ass'y <AA>, referring to the previous step 2.
3. Remove 2 screws <Ⓘ> and then remove the Standby P.C. Board<ⓖ>.

11 RADIATOR ASS'Y <AB> REMOVAL

1. Remove the Chassis Top<㉟>, referring to the previous step 1.
2. Remove 1 screw <Ⓘ> and then remove the Bracket PCB<㉒>.
3. Disconnect the connector <CN102> from lead wire <CN708> on the Speaker P. C. Board<ⓔ>.
4. Disconnect the lead wire <CW103> from connector <CW16> on the Main P. C. Board<Ⓘ>.
5. Disconnect the lead wire <CW104> from connector <CW5> on the Main P. C. Board<Ⓘ>.
6. Disconnect the lead wire <JW368 AREA, 1P> from connector <L/V PW-01> on the Main P. C. Board<Ⓘ>.
7. Disconnect the connector <CN101> from lead wire <CW801> on the Free Out P. C. Board<Ⓘ>.
8. Remove 1 screw <Ⓓ> of the Radiator<⑳> and then disconnect the connector <CW 8> on the Main P. C. Board<Ⓘ>.
9. Remove 4 screws <Ⓘ> and then remove the Radiator Ass'y <AB>.

12 AMP P.C. BOARD <Ⓘ> REMOVAL

1. Remove the Chassis Top<㉟>, referring to the previous step 1.
2. Remove the Radiator Ass'y <AB>, referring to the previous step 11 .
3. Remove 5 screws <Ⓓ> and then remove the Amp P.C. Board<Ⓘ>.

13 TUNER P.C. BOARD <ⓚ> REMOVAL

1. Remove the Chassis Top<㉟>, referring to the previous step 1.
2. Remove 2 screws <Ⓚ, Ⓖ> and then remove the Tuner P.C. Board<ⓚ>.

14 PRE OUT P. C. BOARD <Ⓛ> REMOVAL

1. Remove the Chassis Top<㉟>, referring to the previous step 1.
2. Remove 1 screw <Ⓘ> and then remove the Bracket PCB<㉒>.
3. Disconnect the lead wire <CW803> from connector <CN404> on the Input P. C. Board<ⓜ>.
4. Disconnect the lead wire <CW807> from connector <CN405> on the Input P. C. Board<ⓜ>.
5. Disconnect the connector <CN803> from lead wire <CW705> on the Tone P. C. Board<ⓒ>.
6. Disconnect the lead wire <CW801> from connector <CN101> on the Amp P. C. Board<Ⓘ>.
7. Remove 4 screws <Ⓚ, Ⓖ> and then remove the Pre Out P. C. Board<Ⓛ>.

15 INPUT P. C. BOARD <ⓜ> REMOVAL

1. Remove the Chassis Top<㉟>, referring to the previous step 1.
2. Remove 1 screw <Ⓘ> and then remove the Bracket Pcb<㉒>.
3. Disconnect the connector <CN404> from lead wire <CW803> on the Free Out P. C. Board<Ⓘ>.
4. Disconnect the connector <CN403> from lead wire <CW706> on the Video 2 P. C. Board<ⓑ>.
5. Disconnect the connector <CN405> from lead wire <CW807> on the Free Out P. C. Board<Ⓘ>.
6. Remove 1 screw <Ⓒ> of the Main P. C. Board <Ⓘ> and then the lead wire <C541 AREA, 1P> on the Input P. C. Board<ⓜ>.
7. Remove 5 screws <Ⓚ, Ⓖ> and then remove the Input P. C. Board<ⓜ>.

16 VIDEO P. C. BOARD <ⓝ> REMOVAL

1. Remove the Chassis Top<㉟>, referring to the previous step 1.
2. Disconnect the connector <CN902> from lead wire <CW706> on the Video 2 P. C. Board<ⓑ>.
3. Remove 3 screws <Ⓚ, Ⓖ> and then remove the Video P. C. Board<ⓝ>.

17 MAIN P. C. BOARD <Ⓘ> REMOVAL

1. Remove the Chassis Top<㉟>, referring to the previous step 1.
2. Remove the Tuner P. C. Board<ⓚ>, referring to the previous step 13.
3. Remove the Free Out P. C. Board<Ⓘ>, referring to the previous step 14.
4. Remove the Input P. C. Board<ⓜ>, referring to the previous step 15.
5. Remove the Video P. C. Board<ⓝ>, referring to the previous step 16.
6. Disconnect the connector <CW3> from lead wire <2P> PT < ㉙>.
7. Disconnect the connector <CW1> from AC Cord<㊲>.
8. Disconnect the connector <CW2> from connector <CW19> on the Standby P. C. Board<ⓖ>.
9. Disconnect the connector <CW4> from lead wire <CN708> on the Speaker P. C. Board<ⓔ>.
10. Disconnect the connector <CW5> from lead wire <CW104> on the Amp P. C. Board<Ⓘ>.
11. Disconnect the connector <CW9> from lead wire <3P> P/T<㉙>.
12. Disconnect the connector <CW17> from lead wire <CW701> on the Front P. C. Board<ⓗ>.
13. Disconnect the connector <CW6> from lead wire <3P> P/T<㉙>.
14. Disconnect the connector <CW16> from lead wire <CW103> on the Amp P. C. Board<Ⓘ>.
15. Disconnect the connector <CW8> from lead wire <POSISTOR> on the Radiator<⑳ >.
16. Disconnect the connector <CW7> from lead wire <6P> P/T< ㉙>.
17. Disconnect the connector <CW10> from connector <CN701> on the Front P. C. Board<ⓗ>.
18. Disconnect the connector <L/V PIN-01> from lead wire <1P> on the Amp P. C. Board<Ⓘ>.
19. Remove 19 screws < Ⓖ, Ⓚ > and then remove the Chassis back ㉜ >.
20. Remove 9 screws <Ⓒ,Ⓓ> and then remove the Main P. C. Board<Ⓘ>.

18 POWER TRANS<㉙> REMOVAL

1. Remove the Chassis Top<㉟>, referring to the previous step 1.
2. Disconnect the lead wire <2P-black, white> from connector <CW3> on the Main P. C. Board<Ⓘ>.
3. Disconnect the lead wire <3P-black, red> from connector <CW6> on the Main P. C. Board<Ⓘ>.
4. Disconnect the lead wire <3P-orange, gray> from connector <CW9> on the Main P. C. Board<Ⓘ>.
5. Disconnect the lead wire <6P-black, blue, brown> from connector <CW7> on the Main P. C. Board<Ⓘ>.
6. Remove 4 screws <Ⓑ> and then remove the Power Trans<㉙>.

AVR5/AVR18RDS

NO	PARTS NAME	PART NO	Q'TY	REMARK
1	KNOB-VOLUME	MJAF-16090-ZZ4	1	ABS
2	NUT	***	4	***
3	WASHER	***	1	***
4	WINDOW-FL	MAAF-08070-ZZ3	1	PVC
5	KNOB-BALANCE	MJAF-16070-ZZ4	3	ABS
6	PANEL-FRONT	MJAF-06080-ZZ1	1	ABS
7	KNOB-MUTE	MJAF-16080-ZZ4	1	ABS
8	SHIELD-VIDEO	MPAC-16230-004	1	ET-HD
9	SHIELD-BALANCE	MPAC-16160-004	1	ET-HD
10	PUSH-BUTTONS(C)	MJAF-08030-ZZ3	1	ABS
11	FILTER-FL	MAAF-16150-ZZ4	1	PVC
12	KNOB-CHANNEL	MJAF-08000-ZZ3	1	ABS
13	PUSH-BUTTONS(B)	MJAF-08020-ZZ3	1	ABS
14	PUSH-BUTTONS(A)	MJAF-08010-ZZ3	1	ABS
15	KNOB-SPEAKER	MJAF-16060-ZZ4	2	ABS
16	KNOB-POWER	MJAF-16110-ZZ4	1	ABS
17	LENS-POWER	MAAF-16120-ZZ4	1	ACRYL
18	KNOB-STANDBY	MJAF-16050-ZZ4	1	ABS
19	CUSHION-A	MRAG-13020-004	2	EVA
20	RADIATOR-MAIN	MEAC-04840-002	1	A6063
21	BRACKET-RADIATOR(S)	MPAC-16220-004	5	SECC
22	BRACKET-PCB	MPAC-16170-004	1	US CO
23	FOOT(A)	MJAF-15640-ZZ4	4	ABS
24	CHASSIS-BOTTOM	MPAC-04810-002	1	US CO
25	CUSHION-A	MRAG-13050-004	2	FELT
26	CUSHION-A	MRAG-13030-004	1	EVA
27	SUPPORT-PCB	MJAF-16140-ZZ4	6	ABS

NO	PARTS NAME	PART NO	Q'TY	REMARK
28	CHASSIS-PANEL	MPAC-04760-003	1	US CO
29	POWER-TRANS	PTAP-03420-CJU	1	***
30	RADIATOR-TR	MEAC-08215-004	2	AL
31	HEAT-SINK(TR)	MEAC-12693-004	1	AL
32	CHASSIS-BACK	MPAC-04770-ZZ2	1	US CO
33	TERMINAL-GND	MMAC-12060-004	1	***
34	CUSHION-A	MRAG-13040-004	1	FELT
35	CHASSIS-TOP	MPAC-04820-ZZ2	1	VCM
36	CORD-BUSH	MJAG-00280-003	1	***
37	CORD-AC A'SSY	ACAC-00413-000	1	***
38	T/R	***	10	***
39	T/R	***	5	***
40	MICA	***	10	***
a	MUTE P.C.BOARD	***	1	***
b	VIDEO3 P.C.BOARD	***	1	***
c	TONE P.C.BOARD	***	1	***
d	ENCODER VOLUME P.C.BOARD	***	1	***
e	SPEAKER P.C.BOARD	***	1	***
f	POWER P.C.BOARD	***	1	***
g	STANDBY P.C.BOARD	***	1	***
h	FRONT P.C.BOARD	***	1	***
i	AMP P.C.BOARD	***	1	***
j	MAIN P.C.BOARD	***	1	***

NO	PARTS NAME	PART NO	Q'TY	REMARK
k	TUNER P.C.BOARD	***	1	***
l	PRE OUT P.C.BOARD	***	1	***
m	INPUT & PROLOGIC P.C.BOARD	***	1	***
n	VIDEO P.C.BOARD	***	1	***

EXPLODED VIEW

AVR5 only

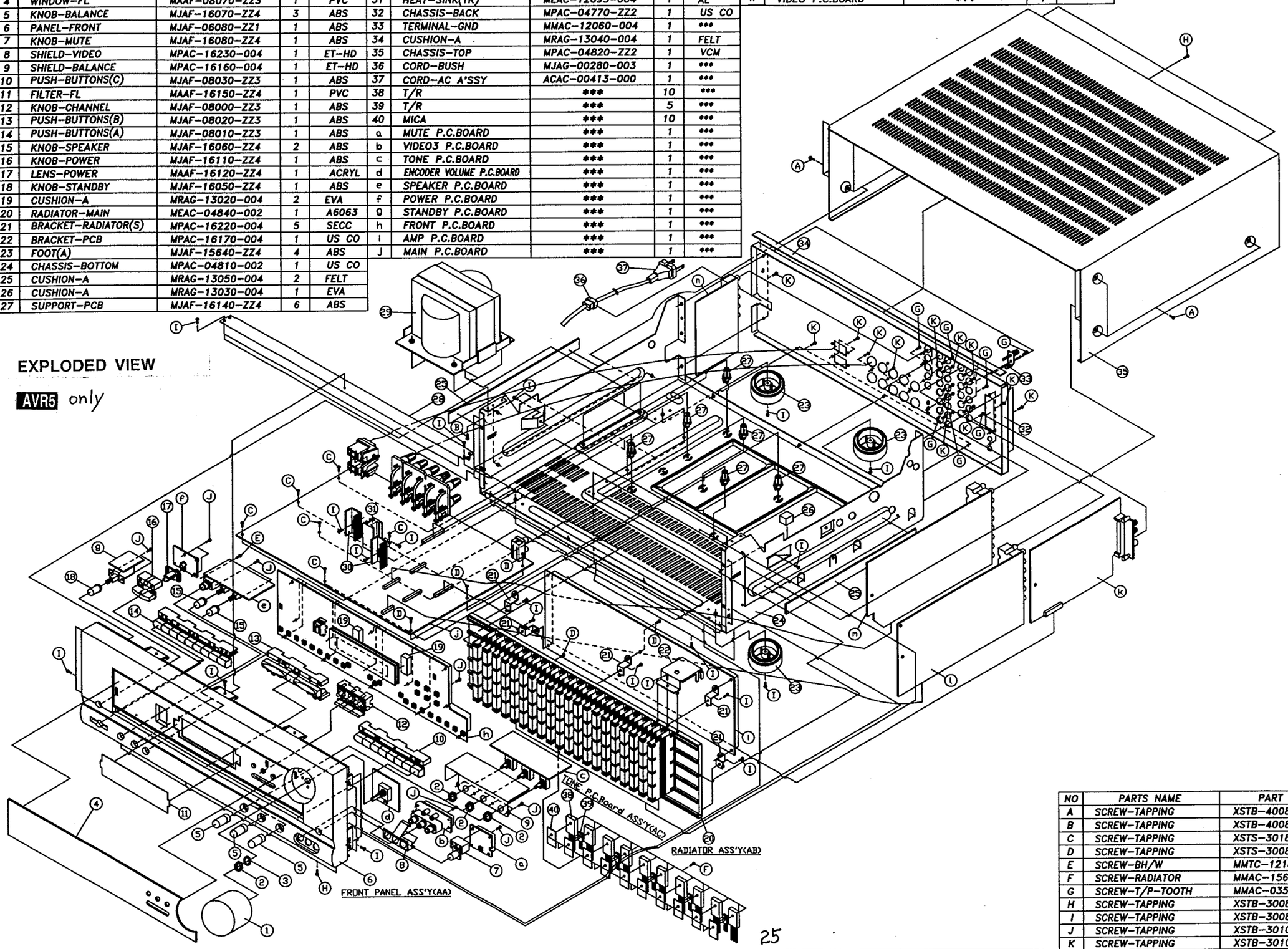

NO	PARTS NAME	PART NO	Q'TY	REMARK
A	SCREW-TAPPING	XSTB-40080-ZB8	6	***
B	SCREW-TAPPING	XSTB-40080-ZY8	4	***
C	SCREW-TAPPING	XSTS-30180-ZY4	6	***
D	SCREW-TAPPING	XSTS-30080-ZY4	9	***
E	SCREW-BH/W	MMTC-12180-004	1	***
F	SCREW-RADIATOR	MMAC-15650-004	15	***
G	SCREW-T/P-TOOTH	MMAC-03592-004	8	***
H	SCREW-TAPPING	XSTB-30080-ZB4	7	***
I	SCREW-TAPPING	XSTB-30080-ZY4	26	***
J	SCREW-TAPPING	XSTB-30100-ZY4	27	***
K	SCREW-TAPPING	XSTB-30100-ZB4	20	***

NO	PARTS NAME	PART NO	Q'TY	REMARK
1	KNOB-VOLUME	MJAF-16090-ZZ4	1	ABS
2	NUT	***	4	***
3	WASHER	***	1	***
4	WINDOW-FL	MAAF-08070-ZZ3	1	PVC
5	KNOB-BALANCE	MJAF-16070-ZZ4	3	ABS
6	PANEL-FRONT	MJAF-06080-ZZ1	1	ABS
7	KNOB-MUTE	MJAF-16080-ZZ4	1	ABS
8	SHIELD-VIDEO	MPAC-16230-004	1	ET-HD
9	SHIELD-BALANCE	MPAC-16160-004	1	ET-HD
10	PUSH-BUTTONS(C)	MJAF-08030-ZZ3	1	ABS
11	FILTER-FL	MAAF-16150-ZZ4	1	PVC
12	KNOB-CHANNEL	MJAF-08000-ZZ3	1	ABS
13	PUSH-BUTTONS(B)	MJAF-08020-ZZ3	1	ABS
14	PUSH-BUTTONS(A)	MJAF-08010-ZZ3	1	ABS
15	KNOB-SPEAKER	MJAF-16060-ZZ4	2	ABS
16	KNOB-POWER	MJAF-16110-ZZ4	1	ABS
17	LENS-POWER	MAAF-16120-ZZ4	1	ACRYL
18	KNOB-STANDBY	MJAF-16050-ZZ4	1	ABS
19	CUSHION-A	MRAG-13020-004	2	EVA
20	RADIATOR-MAIN	MEAC-04840-002	1	A6063
21	BRACKET-RADIATOR(S)	MPAC-16220-004	5	SECC
22	BRACKET-PCB	MPAC-16170-004	1	US CO
23	FOOT(A)	MJAF-15640-ZZ4	4	ABS
24	CHASSIS-BOTTOM	MPAC-04810-002	1	US CO
25	CUSHION-A	MRAG-13050-004	2	FELT
26	CUSHION-A	MRAG-13030-004	1	EVA
27	SUPPORT-PCB	MJAF-16140-ZZ4	6	ABS

NO	PARTS NAME	PART NO	Q'TY	REMARK
28	CHASSIS-PANEL	MPAC-04760-003	1	US CO
29	POWER-TRANS	PTAP-03420-CJU	1	***
30	RADIATOR-TR	MEAC-08215-004	2	AL
31	HEAT-SINK(TR)	MEAC-12693-004	1	AL
32	CHASSIS-BACK	MPAC-04770-ZZ2	1	US CO
33	TERMINAL-GND	MMAC-12060-004	1	***
34	CUSHION-A	MRAG-13040-004	1	FELT
35	CHASSIS-TOP	MPAC-04820-ZZ2	1	VCM
36	CORD-BUSH	MJAG-00280-003	1	***
37	CORD-AC A'SSY	ACAC-00413-000	1	***
38	T/R	***	10	***
39	T/R	***	5	***
40	MICA	***	10	***
a	MUTE P.C.BOARD	***	1	***
b	VIDEO3 P.C.BOARD	***	1	***
c	TONE P.C.BOARD	***	1	***
d	ENCODER VOLUME P.C.BOARD	***	1	***
e	SPEAKER P.C.BOARD	***	1	***
f	POWER P.C.BOARD	***	1	***
g	STANDBY P.C.BOARD	***	1	***
h	FRONT P.C.BOARD	***	1	***
i	AMP P.C.BOARD	***	1	***
j	MAIN P.C.BOARD	***	1	***

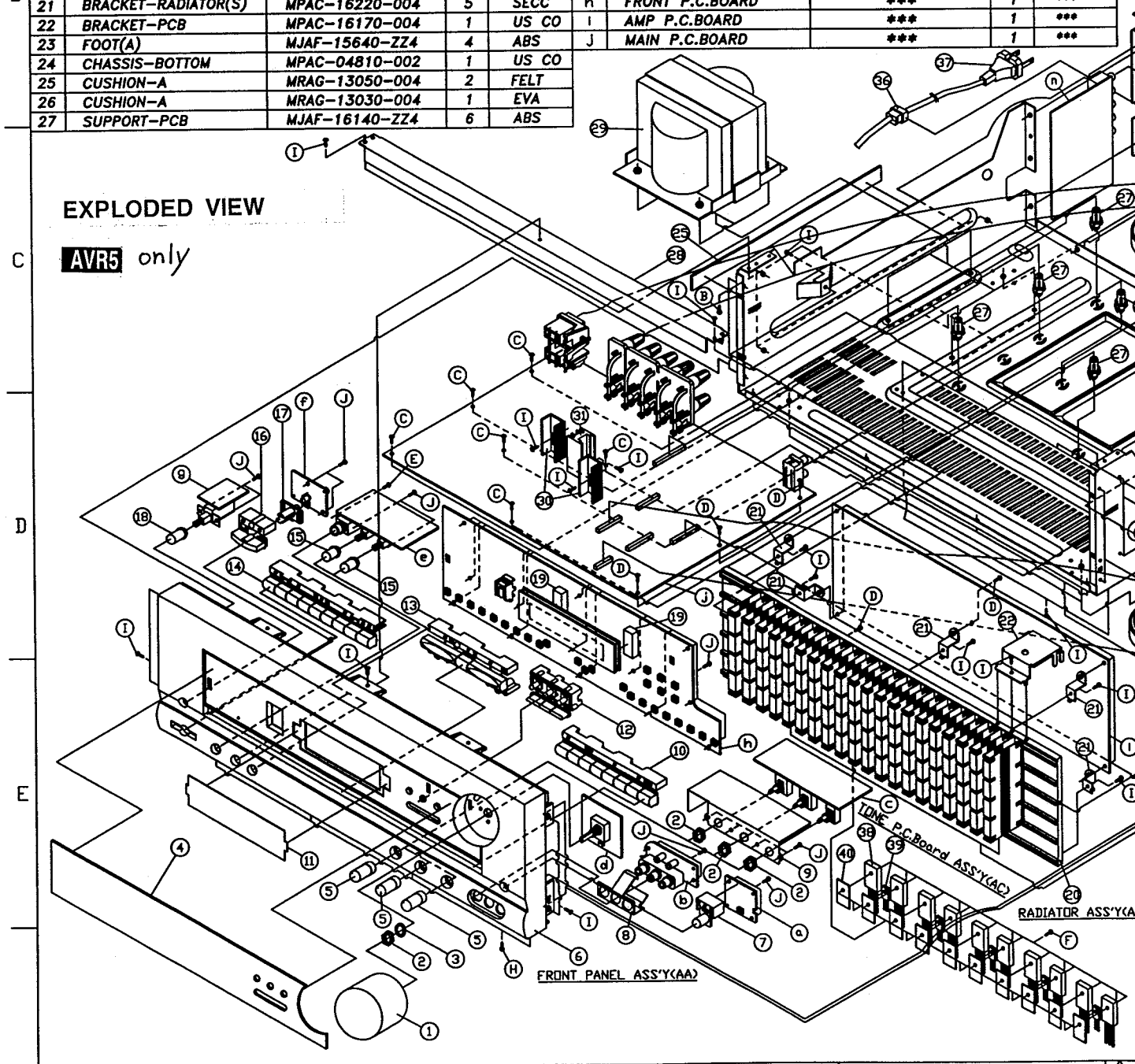

AVR5/AVR18RDS

MARK	NO	PARTS NAME	PART NO	Q'TY	REMARK
S CO	k	TUNER P.C.BOARD	***	1	***
**	l	PRE OUT P.C.BOARD	***	1	***
L	m	INPUT & PROLOGIC P.C.BOARD	***	1	***
L	n	VIDEO P.C.BOARD	***	1	***

S CO
**
ELT
CM
**
**
**
**
**
**
**
**
**
**
**
**
**
**
**

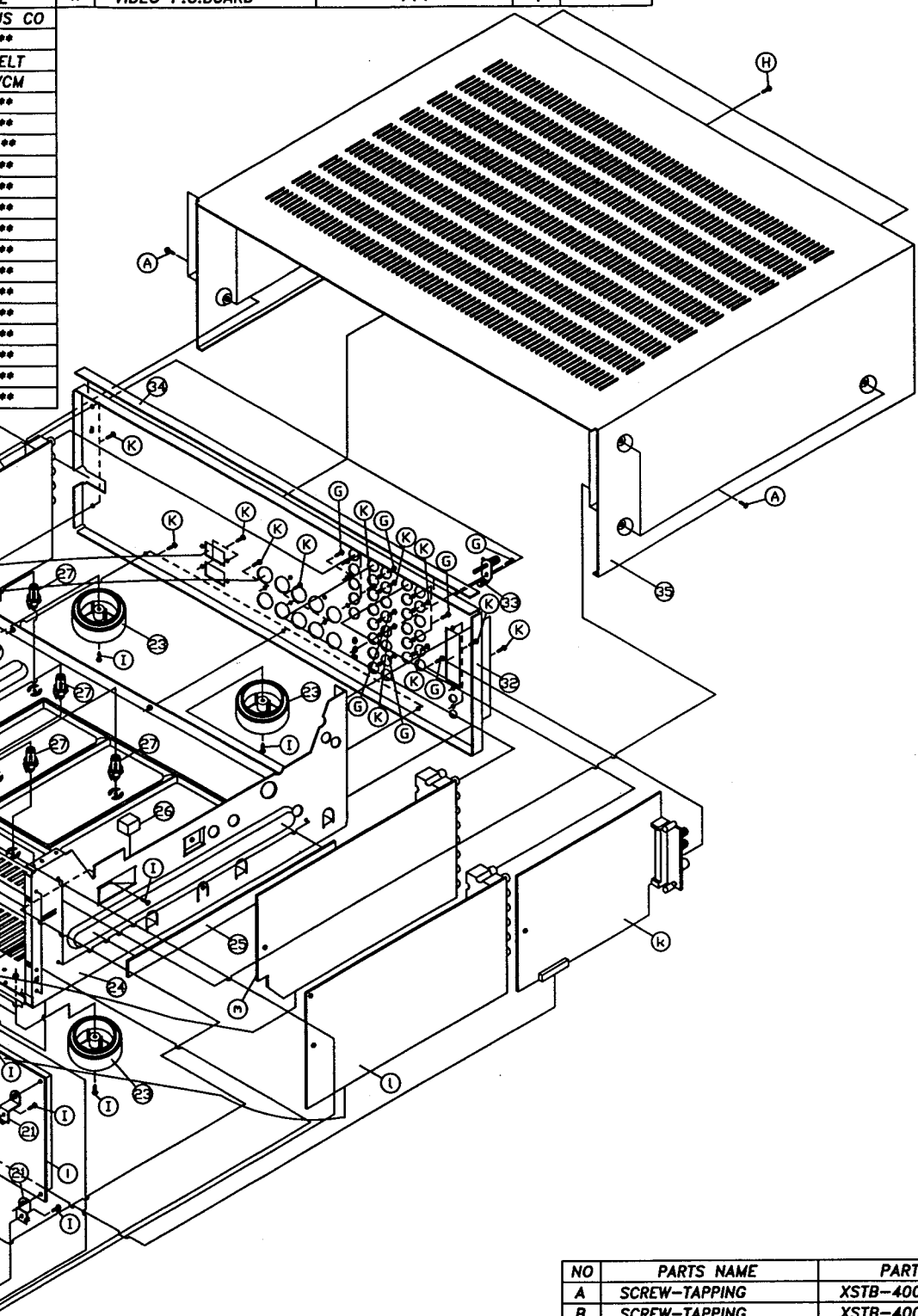

IR ASS'Y(AB)

NO	PARTS NAME	PART NO	Q'TY	REMARK
A	SCREW-TAPPING	XSTB-40080-ZB8	6	***
B	SCREW-TAPPING	XSTB-40080-ZY8	4	***
C	SCREW-TAPPING	XSTS-30180-ZY4	6	***
D	SCREW-TAPPING	XSTS-30080-ZY4	9	***
E	SCREW-BH/W	MMTC-12180-004	1	***
F	SCREW-RADIATOR	MMAC-15650-004	15	***
G	SCREW-T/P-TOOTH	MMAC-03592-004	8	***
H	SCREW-TAPPING	XSTB-30080-ZB4	7	***
I	SCREW-TAPPING	XSTB-30080-ZY4	26	***
J	SCREW-TAPPING	XSTB-30100-ZY4	27	***
K	SCREW-TAPPING	XSTB-30100-ZB4	20	***

AVR5/AVR18RDS

NO	PARTS NAME	PART NO	Q'TY	REMARK
1	KNOB-VOLUME	MJAF-16090-ZZ4	1	ABS
2	NUT	***	4	***
3	WASHER	***	1	***
4	WINDOW-FL	MAAF-08070-ZZ3	1	PVC
5	KNOB-BALANCE	MJAF-16070-ZZ4	3	ABS
6	PANEL-FRONT	MJAF-06080-ZZ1	1	ABS
7	KNOB-MUTE	MJAF-16080-ZZ4	1	ABS
8	SHIELD-VIDEO	MPAC-16230-004	1	ET-HD
9	SHIELD-BALANCE	MPAC-16160-004	1	ET-HD
10	PUSH-BUTTONS(C)	MJAF-08030-ZZ3	1	ABS
11	FILTER-FL	MAAF-16150-ZZ4	1	PVC
12	KNOB-CHANNEL	MJAF-08000-ZZ3	1	ABS
13	PUSH-BUTTONS(B)	MJAF-08020-ZZ3	1	ABS
14	PUSH-BUTTONS(A)	MJAF-08010-ZZ3	1	ABS
15	KNOB-SPEAKER	MJAF-16060-ZZ4	2	ABS
16	KNOB-POWER	MJAF-16110-ZZ4	1	ABS
17	LENS-POWER	MAAF-16120-ZZ4	1	ACRYL
18	KNOB-STANDBY	MJAF-16050-ZZ4	1	ABS
19	CUSHION-A	MRAG-13020-004	2	EVA
20	RADIATOR-MAIN	MEAC-04840-002	1	A6063
21	BRACKET-RADIATOR(S)	MPAC-16220-004	5	SECC
22	BRACKET-PCB	MPAC-16170-004	1	US CO
23	FOOT(A)	MJAF-15640-ZZ4	4	ABS
24	CHASSIS-BOTTOM	MPAC-04810-002	1	US CO
25	CUSHION-A	MRAG-13050-004	2	FELT
26	CUSHION-A	MRAG-13030-004	1	EVA
27	SUPPORT-PCB	MJAF-16140-ZZ4	6	ABS

NO	PARTS NAME	PART NO	Q'TY	REMARK
28	CHASSIS-PANEL	MPAC-04760-003	1	US CO
29	POWER-TRANS	PTAP-03420-YJV	1	***
30	RADIATOR-TR	MEAC-08215-004	2	AL
31	HEAT-SINK(TR)	MEAC-12693-004	1	AL
32	CHASSIS-BACK	MPAC-04771-ZZ2	1	US CO
33	TERMINAL-GND	MMAC-12060-004	1	***
34	CUSHION-A	MRAG-13040-004	1	FELT
35	CHASSIS-TOP	MPAC-04820-ZZ2	1	VCM
36	CORD-BUSH	MJAG-00280-003	1	***
37	CORD-AC A'SSY	ACAC-00393-002	1	***
38	T/R	***	10	***
39	T/R	***	5	***
40	MICA	***	10	***
41	CORK-TERMINAL	MJAG-13060-004	10	ABS
a	MUTE P.C.BOARD	***	1	***
b	VIDEO3 P.C.BOARD	***	1	***
c	TONE P.C.BOARD	***	1	***
d	ENCODER VOLUME P.C.BOARD	***	1	***
e	SPEAKER P.C.BOARD	***	1	***
f	POWER P.C.BOARD	***	1	***
g	STANDBY P.C.BOARD	***	1	***
h	FRONT P.C.BOARD	***	1	***
i	AMP P.C.BOARD	***	1	***

NO	PARTS NAME	PART NO	Q'TY	REMARK
j	MAIN P.C.BOARD	***	1	***
k	TUNER P.C.BOARD	***	1	***
l	PRE OUT P.C.BOARD	***	1	***
m	INPUT & PROLOGIC P.C.BOARD	***	1	***
n	VIDEO P.C.BOARD	***	1	***

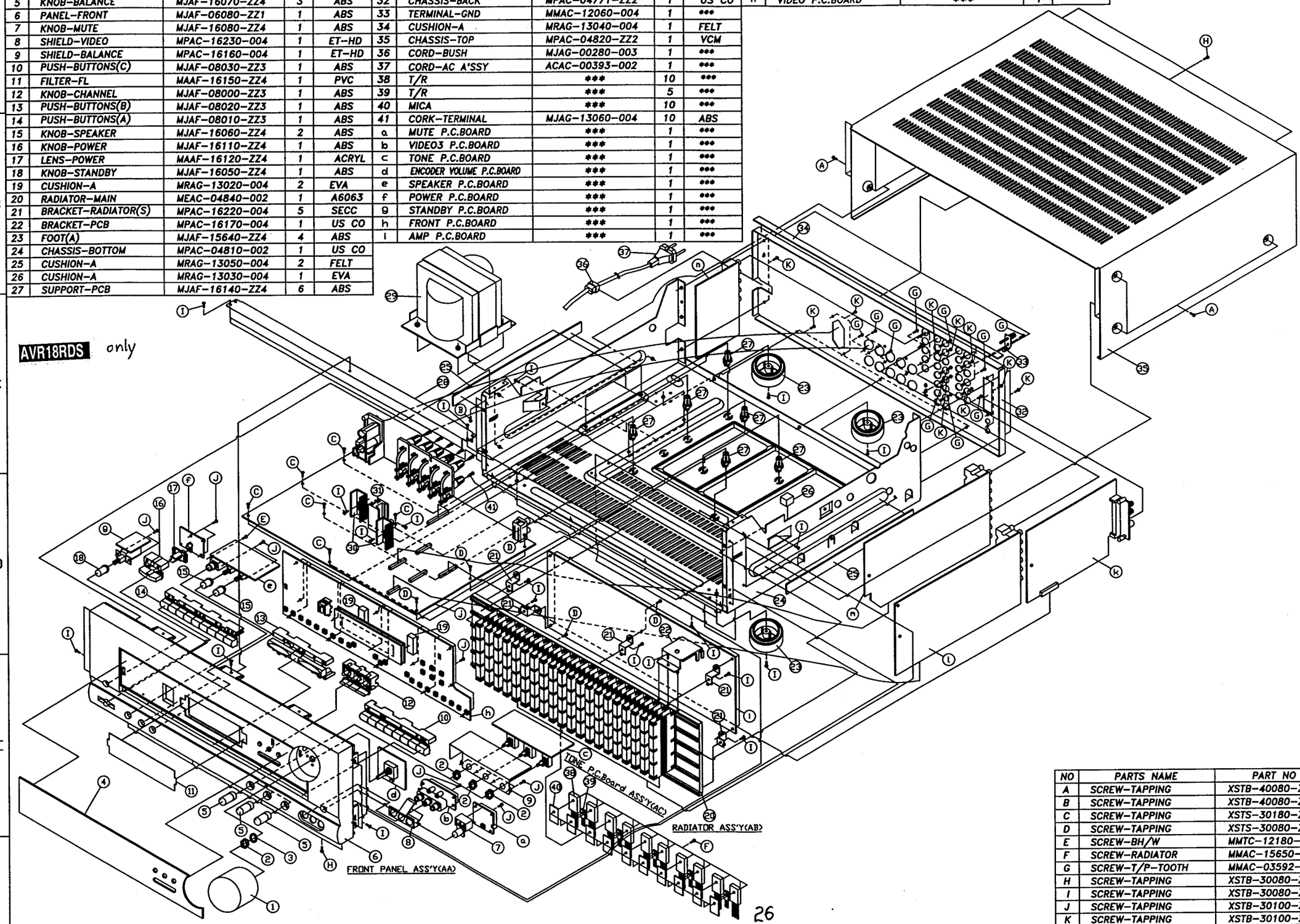

NO	PARTS NAME	PART NO	Q'TY	REMARK
A	SCREW-TAPPING	XSTB-40080-ZB8	6	***
B	SCREW-TAPPING	XSTB-40080-ZY8	4	***
C	SCREW-TAPPING	XSTS-30180-ZY4	6	***
D	SCREW-TAPPING	XSTS-30080-ZY4	9	***
E	SCREW-BH/W	MMTC-12180-004	1	***
F	SCREW-RADIATOR	MMAC-15650-004	15	***
G	SCREW-T/P-TOOTH	MMAC-03592-004	12	***
H	SCREW-TAPPING	XSTB-30080-ZB4	7	***
I	SCREW-TAPPING	XSTB-30080-ZY4	26	***
J	SCREW-TAPPING	XSTB-30100-ZY4	27	***
K	SCREW-TAPPING	XSTB-30100-ZB4	17	***

NO	PARTS NAME	PART NO	Q'TY	REMARK	NO	PARTS NAME	PART NO	Q'TY	REMARK
1	KNOB-VOLUME	MJAF-16090-ZZ4	1	ABS	28	CHASSIS-PANEL	MPAC-04760-003	1	US CO
2	NUT	***	4	***	29	POWER-TRANS	PTAP-03420-YJV	1	***
3	WASHER	***	1	***	30	RADIATOR-TR	MEAC-08215-004	2	AL
4	WINDOW-FL	MAAF-08070-ZZ3	1	PVC	31	HEAT-SINK(TR)	MEAC-12693-004	1	AL
5	KNOB-BALANCE	MJAF-16070-ZZ4	3	ABS	32	CHASSIS-BACK	MPAC-04771-ZZ2	1	US CO
6	PANEL-FRONT	MJAF-06080-ZZ1	1	ABS	33	TERMINAL-GND	MMAC-12060-004	1	***
7	KNOB-MUTE	MJAF-16080-ZZ4	1	ABS	34	CUSHION-A	MRAG-13040-004	1	FELT
8	SHIELD-VIDEO	MPAC-16230-004	1	ET-HD	35	CHASSIS-TOP	MPAC-04820-ZZ2	1	VCM
9	SHIELD-BALANCE	MPAC-16160-004	1	ET-HD	36	CORD-BUSH	MJAG-00280-003	1	***
10	PUSH-BUTTONS(C)	MJAF-08030-ZZ3	1	ABS	37	CORD-AC A'SSY	ACAC-00393-002	1	***
11	FILTER-FL	MAAF-16150-ZZ4	1	PVC	38	T/R	***	10	***
12	KNOB-CHANNEL	MJAF-08000-ZZ3	1	ABS	39	T/R	***	5	***
13	PUSH-BUTTONS(B)	MJAF-08020-ZZ3	1	ABS	40	MICA	***	10	***
14	PUSH-BUTTONS(A)	MJAF-08010-ZZ3	1	ABS	41	CORK-TERMINAL	MJAG-13060-004	10	ABS
15	KNOB-SPEAKER	MJAF-16060-ZZ4	2	ABS	a	MUTE P.C.BOARD	***	1	***
16	KNOB-POWER	MJAF-16110-ZZ4	1	ABS	b	VIDEO3 P.C.BOARD	***	1	***
17	LENS-POWER	MAAF-16120-ZZ4	1	ACRYL	c	TONE P.C.BOARD	***	1	***
18	KNOB-STANDBY	MJAF-16050-ZZ4	1	ABS	d	ENCODER VOLUME P.C.BOARD	***	1	***
19	CUSHION-A	MRAG-13020-004	2	EVA	e	SPEAKER P.C.BOARD	***	1	***
20	RADIATOR-MAIN	MEAC-04840-002	1	A6063	f	POWER P.C.BOARD	***	1	***
21	BRACKET-RADIATOR(S)	MPAC-16220-004	5	SECC	g	STANDBY P.C.BOARD	***	1	***
22	BRACKET-PCB	MPAC-16170-004	1	US CO	h	FRONT P.C.BOARD	***	1	***
23	FOOT(A)	MJAF-15640-ZZ4	4	ABS	i	AMP P.C.BOARD	***	1	***
24	CHASSIS-BOTTOM	MPAC-04810-002	1	US CO					
25	CUSHION-A	MRAG-13050-004	2	FELT					
26	CUSHION-A	MRAG-13030-004	1	EVA					
27	SUPPORT-PCB	MJAF-16140-ZZ4	6	ABS					

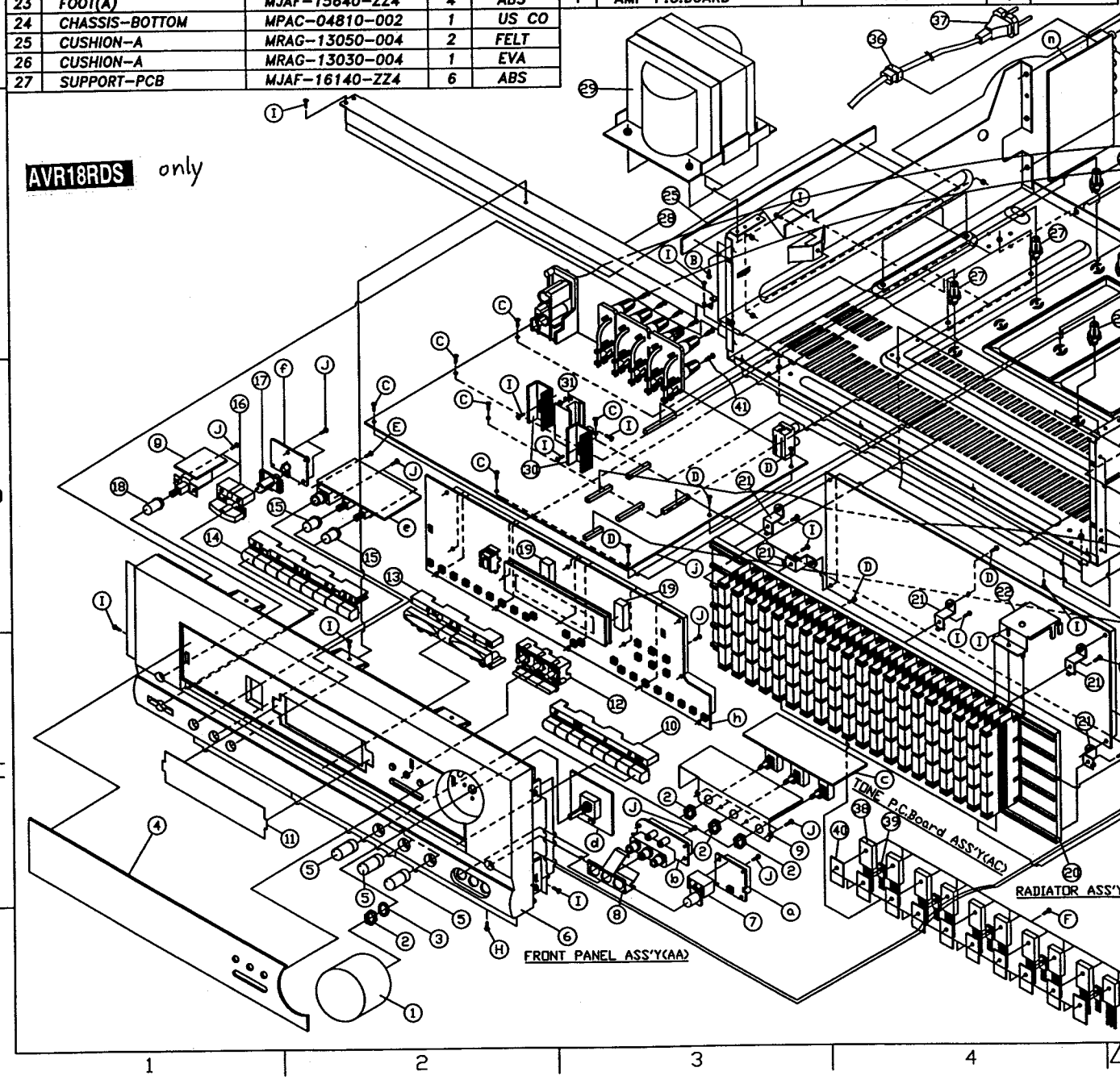

AVR5/AVR18RDS

EMARK	NO	PARTS NAME	PART NO	Q'TY	REMARK
US CO	J	MAIN P.C.BOARD	***	1	***
***	k	TUNER P.C.BOARD	***	1	***
AL	l	PRE OUT P.C.BOARD	***	1	***
AL	m	INPUT & PROLOGIC P.C.BOARD	***	1	***
US CO	n	VIDEO P.C.BOARD	***	1	***
***					
ELT					
/CM					
***					
***					
***					
***					
***					
BS					
***					
***					
***					
***					
***					
***					
***					
***					

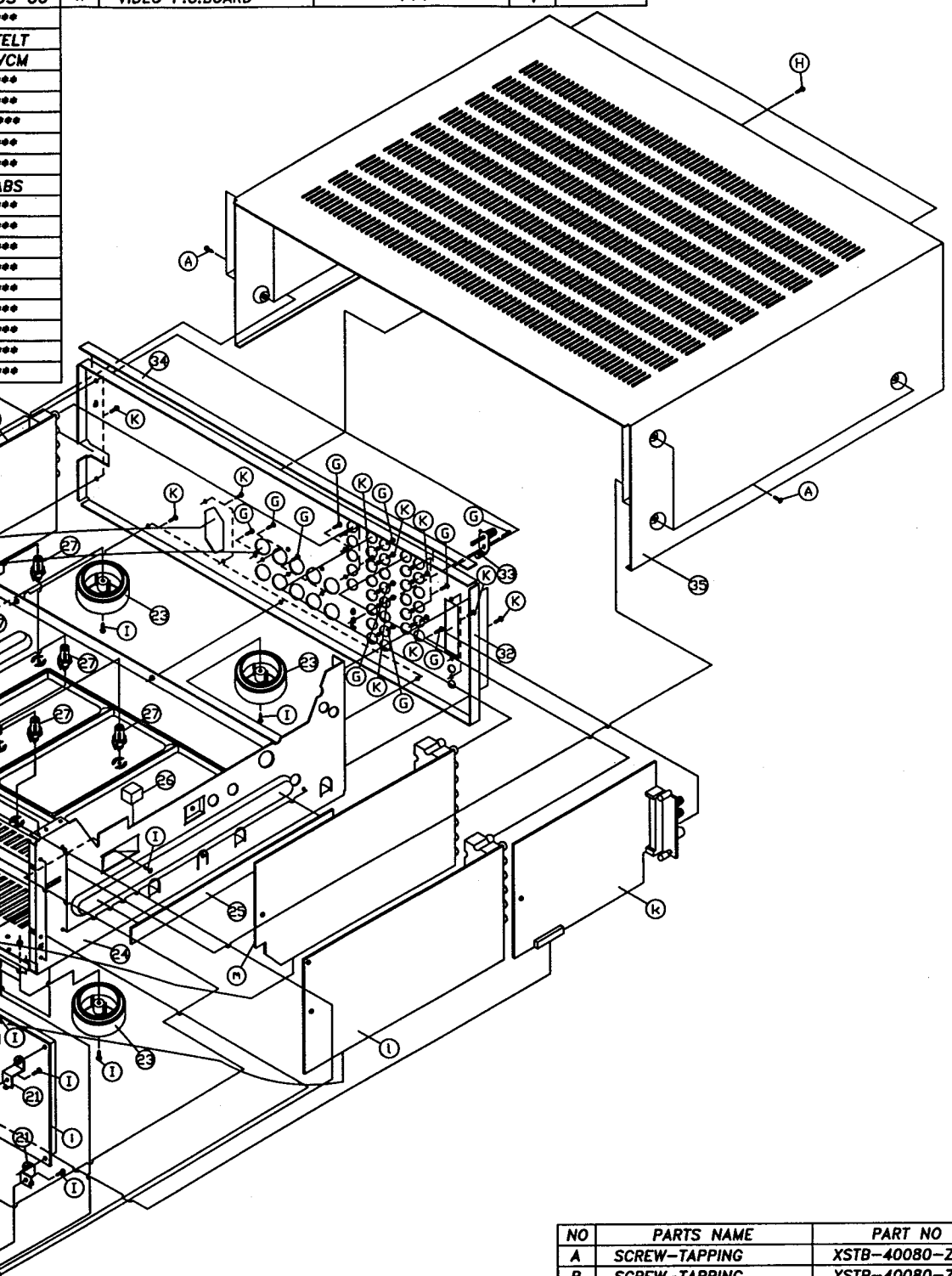

NO	PARTS NAME	PART NO	Q'TY	REMARK
A	SCREW-TAPPING	XSTB-40080-ZB8	6	***
B	SCREW-TAPPING	XSTB-40080-ZY8	4	***
C	SCREW-TAPPING	XSTS-30180-ZY4	6	***
D	SCREW-TAPPING	XSTS-30080-ZY4	9	***
E	SCREW-BH/W	MMTC-12180-004	1	***
F	SCREW-RADIATOR	MMAC-15650-004	15	***
G	SCREW-T/P-TOOTH	MMAC-03592-004	12	***
H	SCREW-TAPPING	XSTB-30080-ZB4	7	***
I	SCREW-TAPPING	XSTB-30080-ZY4	26	***
J	SCREW-TAPPING	XSTB-30100-ZY4	27	***
K	SCREW-TAPPING	XSTB-30100-ZB4	17	***

✳ AVR5 / AVR18RDS PRINCIPAL SCREW LOCATION

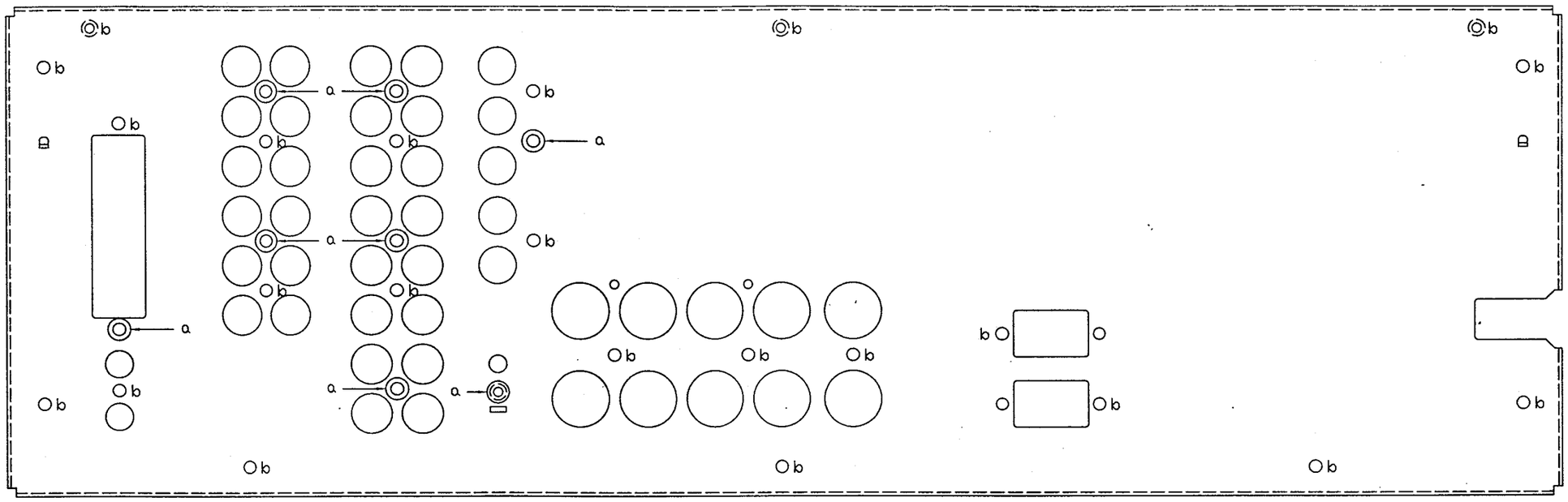

✳ a POINT(8) : MMAC-03592-004 SCREW-T/P-TOOTH(FOR GROUNDING)
✳ b POINT(23) : XSTB-30100-ZB4 SCREW-TAPPING

MMAC-03592-004 SCREW-T/P-TOOTH

XSTB-30100-ZB4 SCREW-TAPPING

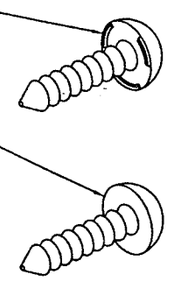

● **GROUND POSITION**

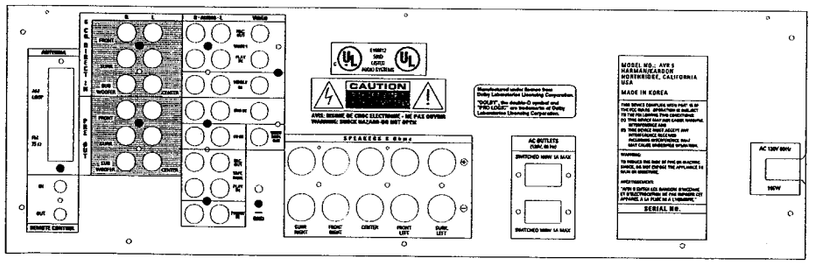

＊ AVR 5 / AVR18RDS PRINCIPAL SCREW LOCATION

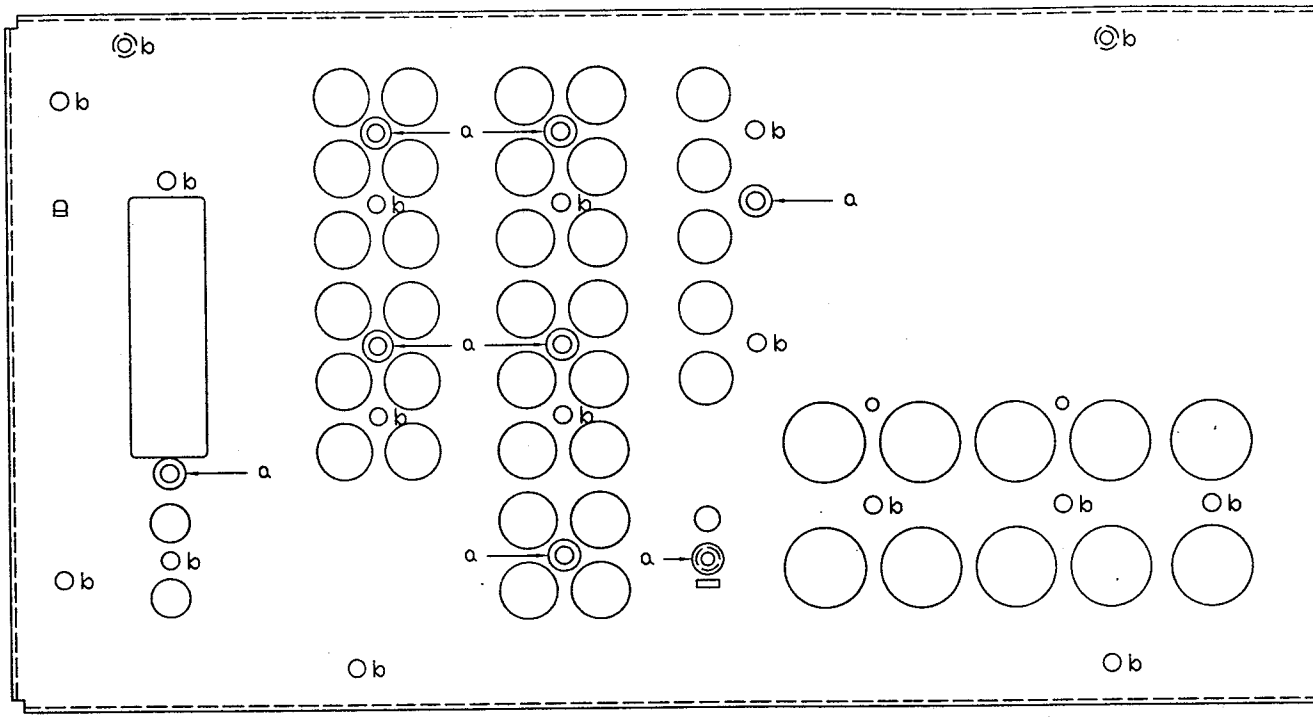

＊ a POINT(8) : MMAC-03592-004 SCREW-T/P-TOOTH(FOR GROUNDING)
＊ b POINT(23) : XSTB-30100-ZB4 SCREW-TAPPING

MMAC-03592-004 SCREW-T/P-TOOTH

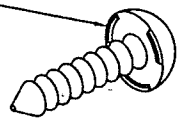

XSTB-30100-ZB4 SCREW-TAPPING

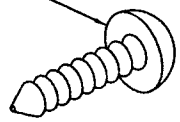

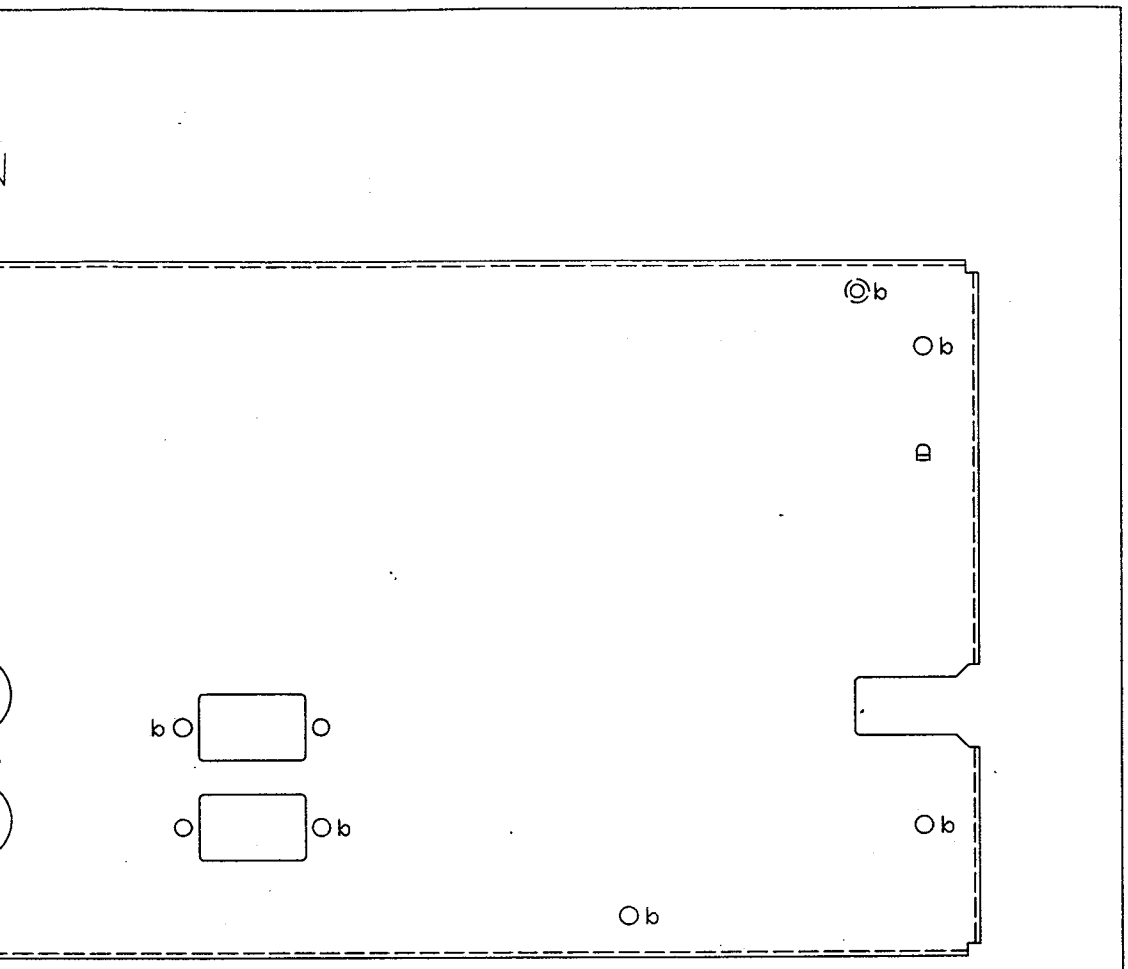

ING)

● GROUND POSITION

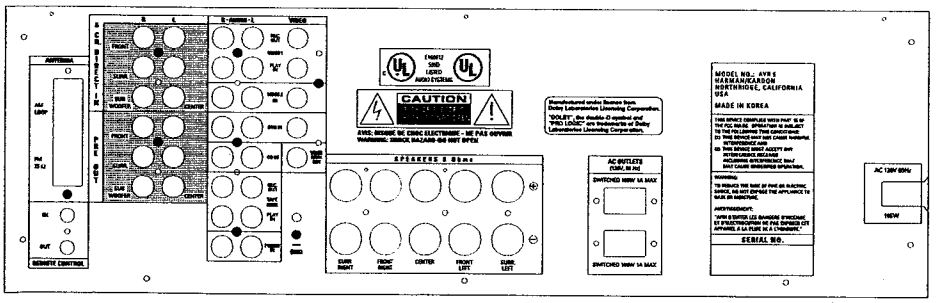

1. Removing the Chassis Top
   Remove the screws ①-⑨

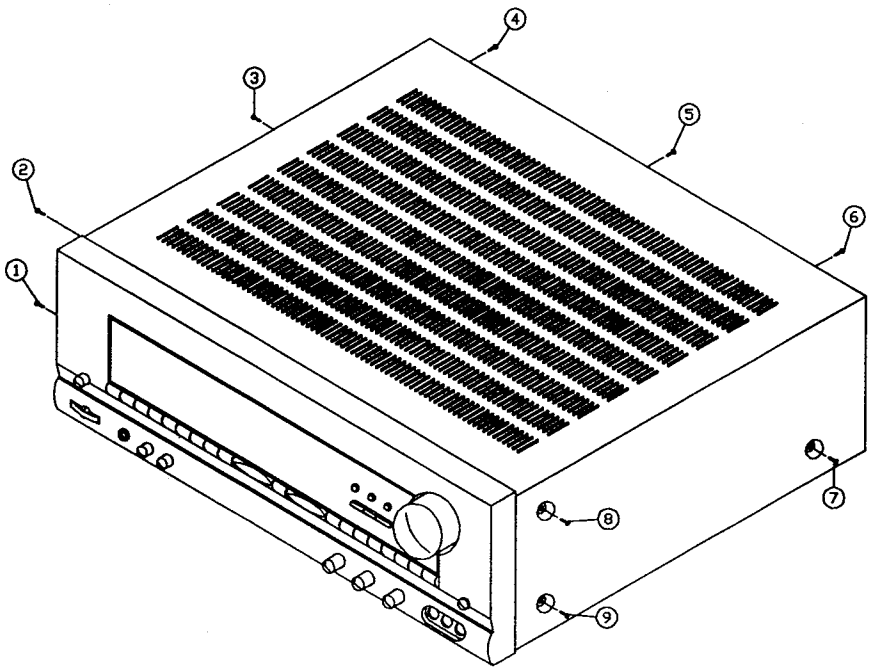

2. Removing the Front Panel
   Remove the screws ①-⑨

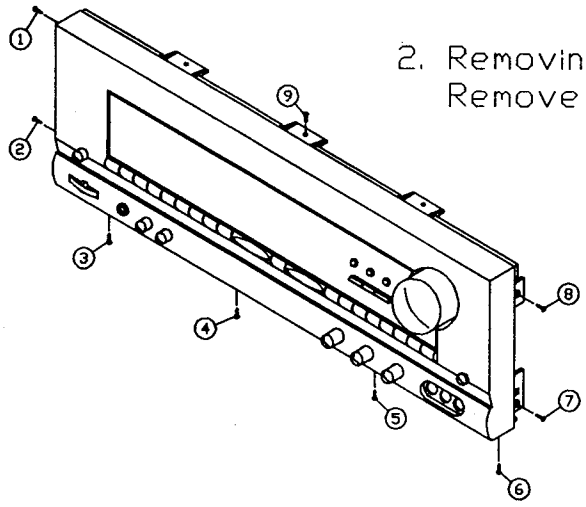

3. Removing the rear panel
Remove the screws ①-㉘

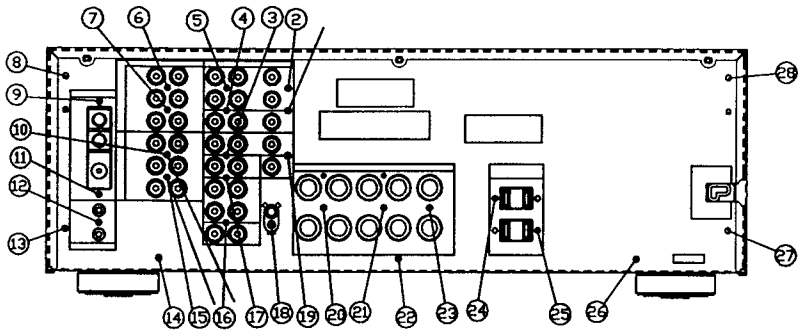

4. Removing the main PCB Block
Remove the screws ①-⑨

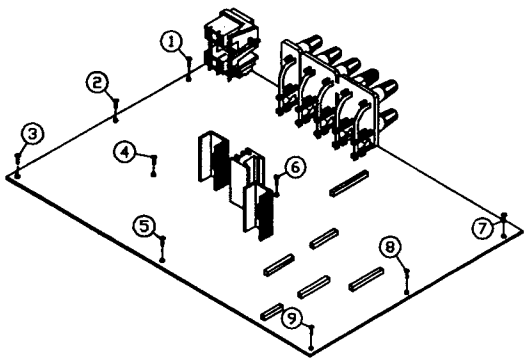

MECHANICAL PARTS LIST

Ref. No.	Part No.	Description	
	1.BLOCK MECHA		
1	MJAF-16090-ZZ4	KNOB-VOLUME	ABS-720
4	MAAF-08070-ZZ3	WINDOW-FL	PVC, A700D R(a)
5	MJAF-16070-ZZ4	KNOB-BALANCE	ABS-720
6	MJAF-16110-ZZ4	KNOB-POWER	ABS-720
6	MJAF-06080-ZZ1	PANEL-FRONT	ABS-720
7	MJAF-16080-ZZ4	KNOB-MUTE	ABS-720
8	MPAC-16230-004	SHIELD-VIDEO	ET-HD,0.3T
9	MPAC-16160-004	SHIELD-BALANCE	ET-HD t0.5
10	MJAF-08030-ZZ3	PUSH-BUTTONS(C)	ABS-720
11	MAAF-16150-ZZ4	FILTER-FL	PVC, RSM-05
12	MJAF-08000-ZZ3	KNOB-CHANNEL	ABS-720
13	MJAF-08020-ZZ3	PUSH-BUTTONS(B)	ABS-720
14	MJAF-08010-ZZ3	PUSH-BUTTONS(A)	ABS-720
15	MJAF-16060-ZZ4	KNOB-SPEAKER	ABS-720
17	MAAF-16120-ZZ4	LENS-POWER	PMMA(IF-850)
18	MJAF-16050-ZZ4	KNOB-STANDBY	ABS-720
20	MEAC-04840-002	RADIATOR-MAIN	A6063,T-5 +AL
21	MPAC-16220-004	BRACKET-RADIATOR(S)	US COATING T1.0
22	MPAC-16170-004	BRACKET-PCB	US Coating t1.0
23	MJAF-15640-ZZ4	FOOT(A)	
24	MPAC-04810-002	CHASSIS-BOTTOM	US Coating t1.2
25	MRAG-13050-004	CUSHION-A	FELT 250x10x0.5 S
26	MRAG-13030-004	CUSHION-A	EVA(VE-45),15X15X12T
27	MJAF-16140-004	SUPPORT-PCB	ABS-720
28	MPAC-04760-003	CHASSIS-PANEL	US Coating t1.0
30	MEAC-08215-004	RADIATOR-T/R	AL
31	MEAC-12693-004	HEAT-SINK (TR)	AL
32	MPAC-04771-ZZ2	CHASSIS-BACK	US Coating t1.0 "AVR18RDS"
32	MPAC-04770-ZZ2	CHASSIS-BACK	US Coating t1.0 "AVR5"
33	MMAC-12060-004	TERMINAL-GND	
34	MRAG-13040-004	CUSHION-A	FELT 437x10x0.5 S
35	MPAC-04820-ZZ2	CHASSIS-TOP	VCM t0.95(SECC0.8+PVC0.15)
36	MJAG-00280-003	CORD-BUSH	NIFCO
37	ACAC-00393-002	CORD-AC ASS'Y	KKJ-1004A,JE201-03,JE203T "AVR18RD
37	ACAC-00413-000	CORD-AC ASS'Y	KE-01P,JE201-03,JE203T "AVR5"
A	XSTB-40080-ZB8	SCREW-TAPPING	BHT3T 4x8 FE-ZB
B	XSTB-40080-ZY8	SCREW-TAPPING	BHT3T 4x8 FE-ZY
C	XSTS-30180-ZY4	SCREW-TAPPING	PHWT2T 3x18 FE-ZY
D	XSTS-30080-ZY4	SCREW-TAPPING	PHWT2T 3x8 FE-ZY
E	MMTC-12180-004	SCREW-BH/W	
F	MMAC-15650-004	SCREW-RADIATOR	
G	MMAC-03592-004	SCREW-T/P-TOOTH	BH T2T 3X10 FE-ZB
H	XSTB-30080-ZB4	SCREW-TAPPING	BHT2T 3x8 FE-ZB
I	XSTB-30080-ZY4	SCREW-TAPPING	BHT2T 3x8 FE-ZY
J	XSTB-30100-ZY4	SCREW-TAPPING	BHT2T 3x10 FE-ZY
K	XSTB-30100-ZB4	SCREW-TAPPING	BHT2T 3x10 FE-ZB
**	MJAG-04540-004	CABLE-TIE-L80	*
**	MMSC-00900-004	AIR-STAPLER	
**	MWAW-00910-003	PALLETS	1040X1126X141
**	YGAP-14250-ZZ4	BOX-GIFT	DW-3
**	YIAR-I2000-ZZA	INST-MANUAL	
**	YSAP-12070-002	CUSHION-L/R	EPS
**	YVAP-01862-ZZ4	POLY-BAG-I(G)	
**	YVAP-13320-ZZ4	TOILON-SHEET	750x1200, 0.5t
**	YWAR-I2000-ZZA	WARRANTY-CARD	
**	7JJG-00212-001	WRAP	**

ELECTRICAL PARTS LIST

PRODUCT SAFETY NOTICE : Products marked with △ have special characteristics important to satety.
If you replace any of these components, read carefully the product safety notice in this manual.
Don't degrade the safety of the product through improper servicing.
Resistor / Capacitor tolerance – D : (±0.5%), J : (±5%), K : (±10%), M : (±20%), z : (+80,–20%)

Ref. No.	Part No.	Description	
	1. MAIN P.C.BOARD		
		FUSES	
▲F101	FGFB-O5002-831	FUSE GLASS	5A 125V 5x20 U/C SB "AVR5 ONLY"
▲F101	FGFB-S3152-837	FUSE GLASS	3.15A 250V V/S/B T "AVR18 ONLY"
▲F102	FGFB-S2502-837	FUSE GLASS	2.5A 250V V/S/B T "AVR18 ONLY"
▲F103	FGFB-O3151-831	FUSE GLASS	315mA 125V 5x20 U/C SB "AVR5 ONLY"
▲F103	FGFB-S3151-837	FUSE GLASS	315mA 250V V/S/B T "AVR18 ONLY"
▲F104	FGFB-O2002-831	FUSE GLASS	2A 125V 51S "AVR5 ONLY"
▲F104	FGFB-S2002-837	FUSE GLASS	2A 250V 50T "AVR18 ONLY"
▲F105	FGFB-O2002-831	FUSE GLASS	2A 125V 51S "AVR5 ONLY"
▲F105	FGFB-S2002-837	FUSE GLASS	2A 250V 50T "AVR18 ONLY"
▲F106	FGFB-O8001-831	FUSE GLASS	800mA 125V 51S "AVR5 ONLY"
▲F106	FGFB-S8001-837	FUSE GLASS	800mA 250V V/S/B T "AVR18 ONLY"
		CAPACITORS	
C1	CCAT-J473Z-AAF	CAPACITOR CERAMIC	0.047uF Z 50V F T
C2	CCAT-J473Z-AAF	CAPACITOR CERAMIC	0.047uF Z 50V F T
C3	CCAT-J473Z-AAF	CAPACITOR CERAMIC	0.047uF Z 50V F T
C4	CEET-E102M-HL0	CAPACITOR E/ALUMINUM	1000uF M 16V 10x16 T
C5	CEET-J1R0M-CI0	CAPACITOR E/ALUMINUM	1.0uF M 50V 5x11 T
C6	CCAT-J104Z-AAF	CAPACITOR CERAMIC	0.1uF Z 50V F T
C7	CEET-JR33M-CI0	CAPACITOR E/ALUMINUM	0.33uF M 50V 5x11 T
C8	CEET-J1R0M-CI0	CAPACITOR E/ALUMINUM	1.0uF M 50V 5x11 T
▲C9	CACS-S472M-180	CAPACITOR AC	0.0047uF 250V
▲C10	CFMT-S104K-GI0	CAPACITOR F/POLYESTR	0.1uF K 250V 9.5x11 TL
▲C11	CFMT-S104K-GI0	CAPACITOR F/POLYESTR	0.1uF K 250V 9.5x11 TL
▲C12	CFMT-S104K-GI0	CAPACITOR F/POLYESTR	0.1uF K 250V 9.5x11 TL
▲C13	CFMT-S104K-GI0	CAPACITOR F/POLYESTR	0.1uF K 250V 9.5x11 TL
▲C14	CFMT-S104K-GI0	CAPACITOR F/POLYESTR	0.1uF K 250V 9.5x11 TL
C15	CEEZ-L104M-SV3	CAPACITOR E/ALUMINUM	10000uF M 63V 35x50 SMH
C16	CEEZ-L104M-SV3	CAPACITOR E/ALUMINUM	10000uF M 63V 35x50 SMH
C17	CFMT-N473J-GK0	CAPACITOR F/POLYESTR	0.047uF J 100V 8.9x13. T
C18	CFMT-N473J-GK0	CAPACITOR F/POLYESTR	0.047uF J 100V 8.9x13. T
C19	CFMT-N473J-GK0	CAPACITOR F/POLYESTR	0.047uF J 100V 8.9x13. T
C20	CFMT-N473J-GK0	CAPACITOR F/POLYESTR	0.047uF J 100V 8.9x13. T
C21	CFMT-N473J-GK0	CAPACITOR F/POLYESTR	0.047uF J 100V 8.9x13. T
C22	CEEM-G222M-LR1	CAPACITOR E/ALUMINUM	2200uF M 35V 16x31.5 U M
C23	CEEM-G222M-LR1	CAPACITOR E/ALUMINUM	2200uF M 35V 16x31.5 U M
C24	CEET-J1R0M-CI0	CAPACITOR E/ALUMINUM	1.0uF M 50V 5x11 T
C25	CEET-J1R0M-CI0	CAPACITOR E/ALUMINUM	1.0uF M 50V 5x11 T
C26	CCCT-J104Z-0FF	CAPACITOR CERAMIC	0.1uF Z 50V F T
C27	CCCT-J104Z-0FF	CAPACITOR CERAMIC	0.1uF Z 50V F T
C28	CFMT-N473J-GK0	CAPACITOR F/POLYESTR	0.047uF J 100V 8.9x13. T
C29	CFMT-N473J-GK0	CAPACITOR F/POLYESTR	0.047uF J 100V 8.9x13. T
C30	CFMT-N473J-GK0	CAPACITOR F/POLYESTR	0.047uF J 100V 8.9x13. T
C31	CEET-E222M-KL0	CAPACITOR E/ALUMINUM	2200uF M 16V 12.5x16 T
C32	CEET-J1R0M-CI0	CAPACITOR E/ALUMINUM	1.0uF M 50V 5x11 T
C33	CCCT-J104Z-0FF	CAPACITOR CERAMIC	0.1uF Z 50V F T
C36	CCCT-J103Z-0DF	CAPACITOR CERAMIC	0.01uF Z 50V F T
C42	CEET-F220M-CI0	CAPACITOR E/ALUMINUM	22uF M 25V 5x11 T
C43	CCCT-J222K-0DB	CAPACITOR CERAMIC	2200PF K 50V B T "AVR18 ONLY"
C44	CCCT-J222K-0DB	CAPACITOR CERAMIC	2200PF K 50V B T "AVR18 ONLY"
C45	CCCT-J222K-0DB	CAPACITOR CERAMIC	2200PF K 50V B T "AVR18 ONLY"
C46	CCCT-J222K-0DB	CAPACITOR CERAMIC	2200PF K 50V B T "AVR18 ONLY"
C47	CCCT-J222K-0DB	CAPACITOR CERAMIC	2200PF K 50V B T "AVR18 ONLY"
C48	CCCT-J222K-0DB	CAPACITOR CERAMIC	2200PF K 50V B T "AVR18 ONLY"
C49	CCCT-J222K-0DB	CAPACITOR CERAMIC	2200PF K 50V B T "AVR18 ONLY"
C50	CCCT-J222K-0DB	CAPACITOR CERAMIC	2200PF K 50V B T "AVR18 ONLY"
C51	CCCT-J222K-0DB	CAPACITOR CERAMIC	2200PF K 50V B T "AVR18 ONLY"
C52	CCCT-J222K-0DB	CAPACITOR CERAMIC	2200PF K 50V B T "AVR18 ONLY"
C54	CEET-C471M-FI1	CAPACITOR E/ALUMINUM	470uF M 6.3V 8x11.5 U T
C55	CEET-J1R0M-CI0	CAPACITOR E/ALUMINUM	1.0uF M 50V 5x11 T
C56	CFMT-N473J-GK0	CAPACITOR F/POLYESTR	0.047uF J 100V 8.9x13. T
C57	CFMT-N473J-GK0	CAPACITOR F/POLYESTR	0.047uF J 100V 8.9x13. T
C58	CFMT-N473J-GK0	CAPACITOR F/POLYESTR	0.047uF J 100V 8.9x13. T
C59	CFMT-N473J-GK0	CAPACITOR F/POLYESTR	0.047uF J 100V 8.9x13. T
C60	CFMT-N473J-GK0	CAPACITOR F/POLYESTR	0.047uF J 100V 8.9x13. T
C61	CEET-F470M-CI0	CAPACITOR E/ALUMINUM	47uF M 25V 5x11 T

Ref. No.	Part No.	Description	
C62	CEET-F470M-CI0	CAPACITOR E/ALUMINUM	47uF M 25V 5x11 T
C63	CEET-J100M-CI0	CAPACITOR E/ALUMINUM	10uF M 50V 5x11 T
C64	CEET-J100M-CI0	CAPACITOR E/ALUMINUM	10uF M 50V 5x11 T
C65	CEET-J100M-CI0	CAPACITOR E/ALUMINUM	10uF M 50V 5x11 T
C66	CEET-J100M-CI0	CAPACITOR E/ALUMINUM	10uF M 50V 5x11 T
C67	CEET-J4R7M-CI0	CAPACITOR E/ALUMINUM	4.7uF M 50V 5x11 T
C68	CEET-J4R7M-CI0	CAPACITOR E/ALUMINUM	4.7uF M 50V 5x11 T
C69	CEET-J4R7M-CI0	CAPACITOR E/ALUMINUM	4.7uF M 50V 5x11 T
C70	CEET-J4R7M-CI0	CAPACITOR E/ALUMINUM	4.7uF M 50V 5x11 T
C71	CCAT-J473Z-AAF	CAPACITOR CERAMIC	0.047uF Z 50V F T
C72	CCAT-J473Z-AAF	CAPACITOR CERAMIC	0.047uF Z 50V F T
C73	CCAT-J221K-AAB	CAPACITOR CERAMIC	220PF K 50V B T
C74	CCAT-J221K-AAB	CAPACITOR CERAMIC	220PF K 50V B T
C75	CCAT-J221K-AAB	CAPACITOR CERAMIC	220PF K 50V B T
C76	CCAT-J221K-AAB	CAPACITOR CERAMIC	220PF K 50V B T
C77	CEET-G471M-HN1	CAPACITOR E/ALUMINUM	470uF M 35V 10x20 U T
		DIODES	
▲D1	DDTR-00040-T10	DIODE-RECTIFIER	1N4004S(400V 1A 0.6mm) T
▲D2	DDTR-00040-T10	DIODE-RECTIFIER	1N4004S(400V 1A 0.6mm) T
▲D3	DDTR-00040-T10	DIODE-RECTIFIER	1N4004S(400V 1A 0.6mm) T
▲D4	DDTR-00040-T10	DIODE-RECTIFIER	1N4004S(400V 1A 0.6mm) T
D5	DDTZ-G043B-SO0	DIODE ZENER	MTZ4.3B 4.17-4.43 DO40 T
▲D6	DDTR-00040-T10	DIODE-RECTIFIER	1N4004S(400V 1A 0.6mm) T
▲D7	DDTR-00040-T10	DIODE-RECTIFIER	1N4004S(400V 1A 0.6mm) T
▲D8	DDMR-00230-T10	DIODE-RECTIFIER	GP60-04F(400V 6A)
▲S9	DDMR-00230-T10	DIODE-RECTIFIER	GP60-04F(400V 6A)
▲D10	DDMR-00230-T10	DIODE-RECTIFIER	GP60-04F(400V 6A)
▲D11	DDMR-00230-T10	DIODE-RECTIFIER	GP60-04F(400V 6A)
▲D12	DDTR-00040-T10	DIODE-RECTIFIER	1N4004S(400V 1A 0.6mm) T
▲D13	DDTR-00040-T10	DIODE-RECTIFIER	1N4004S(400V 1A 0.6mm) T
▲D14	DDTR-00040-T10	DIODE-RECTIFIER	1N4004S(400V 1A 0.6mm) T
▲D15	DDTR-00040-T10	DIODE-RECTIFIER	1N4004S(400V 1A 0.6mm) T
▲D16	DDTR-00040-T10	DIODE-RECTIFIER	1N4004S(400V 1A 0.6mm) T
▲D17	DDTR-00040-T10	DIODE-RECTIFIER	1N4004S(400V 1A 0.6mm) T
D18	DDTS-00070-SO0	DIODE-SI	1SS133 (40V 0.11A) DO-40 T
D19	DDTS-00070-SO0	DIODE-SI	1SS133 (40V 0.11A) DO-40 T
▲D20	DDTR-00040-T10	DIODE-RECTIFIER	1N4004S(400V 1A 0.6mm) T
▲D21	DDTR-00040-T10	DIODE-RECTIFIER	1N4004S(400V 1A 0.6mm) T
D25	DDTZ-G091B-SO0	DIODE ZENER	MTZ9.1B 9.01 DO40 T
▲D26	DDTR-00040-T10	DIODE-RECTIFIER	1N4004S(400V 1A 0.6mm) T
▲D27	DDTR-00040-T10	DIODE-RECTIFIER	1N4004S(400V 1A 0.6mm) T
		INTEGRATED CIRCUITS	
▲IC1	ICRG-00091-SE0	IC REGULATOR	KA7806 6V 3mm TO-220
▲IC2	ICRG-00061-SE0	IC REGULATOR	KA7815 15V 3mm TO-220
▲IC3	ICRG-00251-SE0	IC REGULATOR	KA7915 15V 3mm TO-220
▲IC4	ICRG-00091-SE0	IC REGULATOR	KA7806 6V 3mm TO-220
IC5	ICPC-00010-TB0	IC PHOTOCOUPLER	LTV817B DIP4
IC6	ICOP-00134-SG0	IC DUAL OP AMP	NJM4558M SOP8
IC7	ICOP-00134-SG0	IC DUAL OP AMP	NJM4558M SOP8
		CONNECTORS	
	VSTH-00101-101	POSISTOR	P43T6D100BW23
	U345-6A354-450	WIRE-ASS'Y	UL1617#18 BLU-540 3P
	LLA3-35401-E10	CARD CABLE	KF2B35/400 P7S9 B9 VS3 VB3
▲CW1	KNCW-00990-2T9	CONNECTOR-WAFER	JE202A-1T-02
▲CW2	KNCW-00990-2T9	CONNECTOR-WAFER	JE202A-1T-02
▲CW3	KNCW-00990-2T9	CONNECTOR-WAFER	JE202A-1T-02
CW4	KNCW-00140-6TM	CONNECTOR-WAFER	5267-06A 2.5mm MILK
CW5	KNCW-00140-6TM	CONNECTOR-WAFER	5267-06A 2.5mm MILK
▲CW6	KNCW-00970-3T9	CONNECTOR-WAFER	JE202-1T-3P
CW7	KNCW-00140-6TM	CONNECTOR-WAFER	5267-06A 2.5mm MILK
CW8	KNCW-00140-2TM	CONNECTOR-WAFER	5267-02A 2.5mm MILK
CW9	KNCW-00140-3TM	CONNECTOR-WAFER	5267-03A 2.5mm MILK
CW10	KNCW-06380-35S	CONNECTOR-WAFER	GF120-35S-TS 1.25mm S
CW11	KNCW-01520-ES9	CONNECTOR-WAFER	35336-1410 20MM 14P
CW12	KNCW-01520-DS9	CONNECTOR-WAFER	35336-1310 20MM 13P
CW13	KNCW-01520-CS9	CONNECTOR-WAFER	35336-1210 2M/M 12PIN
CW15	KNCW-01520-9S9	CONNECTOR-WAFER	35336-0910 2M/M 9P
CW16	KNCW-00140-8TM	CONNECTOR-WAFER	5267-08A 2.5mm MILK
CW17	KNCW-00140-8TM	CONNECTOR-WAFER	5267-08A 2.5mm MILK
CW18	KNCW-00140-2TM	CONNECTOR-WAFER	5267-02A 2.5mm MILK

Ref. No.	Part No.	Description	
CW20	KNCW-01520-8S9	CONNECTOR-WAFER	35336-0810 2M/M 8P
CW21	KNCW-01520-BS9	CONNECTOR-WAFER	35336-1110 20MM 11P
	KNCW-06410-01T	CONNECTOR-WAFER	YFW-800-01
		RESISTORS	
R1	RMOR-H100J-0C0	RESISTOR-METAL OXIDE	10ohm 1W J ERG(X)1SJ100E
R3	RCFT-E222J-000	RESISTOR-CARBON FILM	2.2Kohm 1/5W J T
R4	RCFT-E222J-000	RESISTOR-CARBON FILM	2.2Kohm 1/5W J T
R5	RCFT-E222J-000	RESISTOR-CARBON FILM	2.2Kohm 1/5W J T
R6	RCFT-E823J-000	RESISTOR-CARBON FILM	82Kohm 1/5W J T
R7	RMOH-J4R7J-030	RESISTOR-METAL OXIDE	4.7ohm 2W J CRH200
R8	RMOH-J4R7J-030	RESISTOR-METAL OXIDE	4.7ohm 2W J CRH200
R9	RMOH-H100J-030	RESISTOR-METAL OXIDE	10ohm 1W J H
R10	RCFT-F4R7J-010	RESISTOR-CARBON FILM	4.7ohm 1/4W J T
R11	RCFT-F4R7J-010	RESISTOR-CARBON FILM	4.7ohm 1/4W J T
R12	RCFT-E3R3J-000	RESISTOR-CARBON FILM	3.3ohm 1/5W J T
R13	RCFT-E3R3J-000	RESISTOR-CARBON FILM	3.3ohm 1/5W J T
R17	RCFT-E332J-000	RESISTOR-CARBON FILM	3.3Kohm 1/5W J T
R18	RCFT-E101J-000	RESISTOR-CARBON FILM	100ohm 1/5W J T
R19	RCFT-E392J-000	RESISTOR-CARBON FILM	3.9Kohm 1/5W J T
R20	RCFT-E470J-000	RESISTOR-CARBON FILM	47ohm 1/5W J T
R21	RCFT-E473J-000	RESISTOR-CARBON FILM	47Kohm 1/5W J T
R22	RCFT-E271J-000	RESISTOR-CARBON FILM	270ohm 1/5W J T
⚠R23	RCFT-G335K-1D0	RESISTOR-CARBON FILM	3.3Mohm 1/2W ERC12UGK335V
R25	RCFT-E561J-000	RESISTOR-CARBON FILM	560ohm 1/5W J T
R26	RCFT-E152J-000	RESISTOR-CARBON FILM	1.5Kohm 1/5W J T
R27	RCFT-E104J-000	RESISTOR-CARBON FILM	100Kohm 1/5W J T
R29	RCFT-E102J-000	RESISTOR-CARBON FILM	1Kohm 1/5W J T
R30	RCFT-E223J-000	RESISTOR-CARBON FILM	22Kohm 1/5W J T
R31	RCFT-E153J-000	RESISTOR-CARBON FILM	15Kohm 1/5W J T
R32	RCFT-E104J-000	RESISTOR-CARBON FILM	100Kohm 1/5W J T
R33	RCFT-E332J-000	RESISTOR-CARBON FILM	3.3Kohm 1/5W J T
R34	RCFT-E683J-000	RESISTOR-CARBON FILM	68Kohm 1/5W J T
R35	RCFT-E103J-000	RESISTOR-CARBON FILM	10Kohm 1/5W J T
R36	RMOR-H100J-0C0	RESISTOR-METAL OXIDE	10ohm 1W J ERG(X)1SJ100E
R37	RMOR-H100J-0C0	RESISTOR-METAL OXIDE	10ohm 1W J ERG(X)1SJ100E
R38	RMOR-H100J-0C0	RESISTOR-METAL OXIDE	10ohm 1W J ERG(X)1SJ100E
R39	RMOR-H100J-0C0	RESISTOR-METAL OXIDE	10ohm 1W J ERG(X)1SJ100E
R40	RMOR-H100J-0C0	RESISTOR-METAL OXIDE	10ohm 1W J ERG(X)1SJ100E
R41	RCFT-E470J-000	RESISTOR-CARBON FILM	47ohm 1/5W J T
R42	RCFT-E470J-000	RESISTOR-CARBON FILM	47ohm 1/5W J T
R43	RCFT-E104J-000	RESISTOR-CARBON FILM	100Kohm 1/5W J T
R44	RCFT-E104J-000	RESISTOR-CARBON FILM	100Kohm 1/5W J T
R45	RCFT-E104J-000	RESISTOR-CARBON FILM	100Kohm 1/5W J T
R46	RCFT-E104J-000	RESISTOR-CARBON FILM	100Kohm 1/5W J T
R47	RCFT-E223J-000	RESISTOR-CARBON FILM	22Kohm 1/5W J T
R48	RCFT-E104J-000	RESISTOR-CARBON FILM	100Kohm 1/5W J T
R49	RCFT-E223J-000	RESISTOR-CARBON FILM	22Kohm 1/5W J T
R50	RCFT-E104J-000	RESISTOR-CARBON FILM	100Kohm 1/5W J T
R51	RCFT-E102J-000	RESISTOR-CARBON FILM	1Kohm 1/5W J T
R52	RCFT-E102J-000	RESISTOR-CARBON FILM	1Kohm 1/5W J T
R53	RCFT-E102J-000	RESISTOR-CARBON FILM	1Kohm 1/5W J T
R54	RCFT-E102J-000	RESISTOR-CARBON FILM	1Kohm 1/5W J T
R55	RCFT-E102J-000	RESISTOR-CARBON FILM	1Kohm 1/5W J T
R56	RCFT-E102J-000	RESISTOR-CARBON FILM	1Kohm 1/5W J T
R57	RCFT-E102J-000	RESISTOR-CARBON FILM	1Kohm 1/5W J T
R58	RCFT-E102J-000	RESISTOR-CARBON FILM	1Kohm 1/5W J T
R59	RCFT-E152J-000	RESISTOR-CARBON FILM	1.5Kohm 1/5W J T
R60	RCFT-E152J-000	RESISTOR-CARBON FILM	1.5Kohm 1/5W J T
R61	RCFT-E102J-000	RESISTOR-CARBON FILM	1Kohm 1/5W J T
R62	RCFT-E102J-000	RESISTOR-CARBON FILM	1Kohm 1/5W J T
		TRANSISTORS	
Q1	TRTD-00200-SD0	TRANSISTOR N-L FREQ	KTD-1302 TO92
Q2	TRTA-00940-SD0	TRANSISTOR P-H FREQ	KRA107M W/RESIST TO92M
Q3	TRTC-0016G-SD0	TRANSISTOR N-H FREQ	KTC3198-GR TO92
Q4	TRTC-0016G-SD0	TRANSISTOR N-H FREQ	KTC3198-GR TO92
Q5	TRTC-0016G-SD0	TRANSISTOR N-H FREQ	KTC3198-GR TO92
Q6	TRTA-0067Y-SD0	TRANSISTOR P-H FREQ	KTA1267-Y TO92M
		MISCELLANEOUS	
GND1	MPAC-03811-004	TERMINAL-GND	
GND2	MPAC-03811-004	TERMINAL-GND	

Ref. No.	Part No.	Description	
GND3	MPAC-03811-004	TERMINAL-GND	
FC1	MPAC-11620-004	FUSE CLIP	5.2Pi TAPPING TYPE
FC2	MPAC-11620-004	FUSE CLIP	5.2Pi TAPPING TYPE
FC3	MPAC-11620-004	FUSE CLIP	5.2Pi TAPPING TYPE "AVR 18 ONLY"
FC4	MPAC-11620-004	FUSE CLIP	5.2Pi TAPPING TYPE "AVR 18 ONLY"
FC5	MPAC-11620-004	FUSE CLIP	5.2Pi TAPPING TYPE
FC6	MPAC-11620-004	FUSE CLIP	5.2Pi TAPPING TYPE
FC7	MPAC-11620-004	FUSE CLIP	5.2Pi TAPPING TYPE
FC8	MPAC-11620-004	FUSE CLIP	5.2Pi TAPPING TYPE
FC9	MPAC-11620-004	FUSE CLIP	5.2Pi TAPPING TYPE
FC10	MPAC-11620-004	FUSE CLIP	5.2Pi TAPPING TYPE
FC11	MPAC-11620-004	FUSE CLIP	5.2Pi TAPPING TYPE
FC12	MPAC-11620-004	FUSE CLIP	5.2Pi TAPPING TYPE
RL1	ESRY-00290-124	RELAY	DG12D1-O(M) TV-5 S.P.S.T,AC250V 5/
	MEAC-08215-004	RADIATOR-TR	
	MEAC-12693-004	HEAT-SINK(TR)	
⚠	PTAP-03420-CJU	TRANSFORMER-POWER	A96-342C-U 120V/60Hz "AVR5 ONLY"
⚠	PTAP-03420-YJV	TRANSFORMER-POWER	A96-342Y-V 230V/50Hz "AVR18 ONLY"
PCB	PCSR-04790-11B	PCB-MAIN	A1R-479
⚠ST3	PTAC-03260-CJU	TRANSFORMER-POWER	A35-326C-U 120V/60Hz "AVR5 ONLY"
⚠ST3	PTAC-03260-YJV	TRANSFORMER-POWER	A35-326Y-V 230V/50Hz "AVR18 ONLY"
⚠	SKAO-00190-C50	AC OUTLET	S2-764T-214 "AVR5 ONLY"
⚠	SKAO-00130-4CV	AC OUTLET	YKE31-0090 "AVR18 ONLY"
JACK1	SKPH-00520-360	MINIATURE JACK	HSJ1002-01-1020
ST4	TESP-00401-02P	TERMINAL SPEAKER	SH0210381P 2P
SH1	TESP-00460-08S	TERMINAL SPEAKER	SH0810361P 8P

1-1. POWER SWITCH P.C.BOARD

		MISCELLANEOUS	
⚠SW784	SWPU-00591-059	SWITCH-PUSH	SDDLB1-A1-F-2
PCB	PCSR-04790-11B	PCB-PUSH POWER S/W	A1R-479
		CONNECTORS	
⚠CW19	KNCW-00990-2T9	CONNECTOR-WAFER	JE202A-1T-02

2. 5-CH. AMP P.C.BOARD

		CAPACITORS	
C101	CEET-F470M-CI0	CAPACITOR E/ALUMINUM	47uF M 25V 5x11 T
C102	CEET-F470M-CI0	CAPACITOR E/ALUMINUM	47uF M 25V 5x11 T
C103	CCTT-J680J-0FC	CAPACITOR CERAMIC	68PF J 50V CH T
C104	CCTT-J680J-0FC	CAPACITOR CERAMIC	68PF J 50V CH T
C105	CCAT-J681K-AAB	CAPACITOR CERAMIC	680PF K 50V B T
C106	CCAT-J681K-AAB	CAPACITOR CERAMIC	680PF K 50V B T
C107	CEET-F330M-CI0	CAPACITOR E/ALUMINUM	33uF M 25V 5x11 T
C108	CEET-F330M-CI0	CAPACITOR E/ALUMINUM	33uF M 25V 5x11 T
C109	CEET-F220M-CI0	CAPACITOR E/ALUMINUM	22uF M 25V 5x11 T
C110	CEET-F220M-CI0	CAPACITOR E/ALUMINUM	22uF M 25V 5x11 T
C111	CEET-C471M-FI1	CAPACITOR E/ALUMINUM	470uF M 6.3V 8x11.5 U T
C112	CEET-C471M-FI1	CAPACITOR E/ALUMINUM	470uF M 6.3V 8x11.5 U T
C115	CEET-L331M-DI1	CAPACITOR E/ALUMINUM	330uF M 63V 10x20 SHL T
C116	CEET-L331M-DI1	CAPACITOR E/ALUMINUM	330uF M 63V 10x20 SHL T
C117	CEET-L331M-DI1	CAPACITOR E/ALUMINUM	330uF M 63V 10x20 SHL T
C118	CEET-L331M-DI1	CAPACITOR E/ALUMINUM	330uF M 63V 10x20 SHL T
C119	CCTT-J220J-0BZ	CAPACITOR CERAMIC	22PF J 50V SL T
C120	CCTT-J220J-0BZ	CAPACITOR CERAMIC	22PF J 50V SL T
C121	CEET-J100M-CI0	CAPACITOR E/ALUMINUM	10uF M 50V 5x11 T
C122	CEET-J100M-CI0	CAPACITOR E/ALUMINUM	10uF M 50V 5x11 T
C123	CEET-J4R7M-CI0	CAPACITOR E/ALUMINUM	4.7uF M 50V 5x11 T
C124	CEET-J4R7M-CI0	CAPACITOR E/ALUMINUM	4.7uF M 50V 5x11 T
C125	CEET-J100M-CI0	CAPACITOR E/ALUMINUM	10uF M 50V 5x11 T
C126	CEET-J100M-CI0	CAPACITOR E/ALUMINUM	10uF M 50V 5x11 T
C127	CEET-F470M-CI0	CAPACITOR E/ALUMINUM	47uF M 25V 5x11 T
C128	CEET-F470M-CI0	CAPACITOR E/ALUMINUM	47uF M 25V 5x11 T
C129	CCTT-J680J-0FC	CAPACITOR CERAMIC	68PF J 50V CH T
C130	CCTT-J680J-0FC	CAPACITOR CERAMIC	68PF J 50V CH T
C131	CCAT-J681K-AAB	CAPACITOR CERAMIC	680PF K 50V B T
C132	CCAT-J681K-AAB	CAPACITOR CERAMIC	680PF K 50V B T
C133	CEET-F330M-CI0	CAPACITOR E/ALUMINUM	33uF M 25V 5x11 T
C134	CEET-F330M-CI0	CAPACITOR E/ALUMINUM	33uF M 25V 5x11 T
C135	CEET-F220M-CI0	CAPACITOR E/ALUMINUM	22uF M 25V 5x11 T
C136	CEET-F220M-CI0	CAPACITOR E/ALUMINUM	22uF M 25V 5x11 T
C137	CEET-C471M-FI1	CAPACITOR E/ALUMINUM	470uF M 6.3V 8x11.5 U T

Ref. No.	Part No.	Description	
C138	CEET-C471M-FI1	CAPACITOR E/ALUMINUM	470uF M 6.3V 8x11.5 U T
C141	CEET-L331M-DI1	CAPACITOR E/ALUMINUM	330uF M 63V 10x20 SHL T
C142	CEET-L331M-DI1	CAPACITOR E/ALUMINUM	330uF M 63V 10x20 SHL T
C143	CEET-L331M-DI1	CAPACITOR E/ALUMINUM	330uF M 63V 10x20 SHL T
C144	CEET-L331M-DI1	CAPACITOR E/ALUMINUM	330uF M 63V 10x20 SHL T
C145	CCTT-J220J-0BZ	CAPACITOR CERAMIC	22PF J 50V SL T
C146	CCTT-J220J-0BZ	CAPACITOR CERAMIC	22PF J 50V SL T
C147	CEET-J100M-CI0	CAPACITOR E/ALUMINUM	10uF M 50V 5x11 T
C148	CEET-J100M-CI0	CAPACITOR E/ALUMINUM	10uF M 50V 5x11 T
C149	CEET-J4R7M-CI0	CAPACITOR E/ALUMINUM	4.7uF M 50V 5x11 T
C150	CEET-J4R7M-CI0	CAPACITOR E/ALUMINUM	4.7uF M 50V 5x11 T
C151	CEET-J100M-CI0	CAPACITOR E/ALUMINUM	10uF M 50V 5x11 T
C152	CEET-J100M-CI0	CAPACITOR E/ALUMINUM	10uF M 50V 5x11 T
C153	CEET-F470M-CI0	CAPACITOR E/ALUMINUM	47uF M 25V 5x11 T
C154	CCTT-J680J-0FC	CAPACITOR CERAMIC	68PF J 50V CH T
C155	CCAT-J681K-AAB	CAPACITOR CERAMIC	680PF K 50V B T
C156	CEET-F330M-CI0	CAPACITOR E/ALUMINUM	33uF M 25V 5x11 T
C157	CEET-F220M-CI0	CAPACITOR E/ALUMINUM	22uF M 25V 5x11 T
C158	CEET-C471M-FI1	CAPACITOR E/ALUMINUM	470uF M 6.3V 8x11.5 U T
C160	CEET-L331M-DI1	CAPACITOR E/ALUMINUM	330uF M 63V 10x20 SHL T
C161	CEET-L331M-DI1	CAPACITOR E/ALUMINUM	330uF M 63V 10x20 SHL T
C162	CCTT-J220J-0BZ	CAPACITOR CERAMIC	22PF J 50V SL T
C163	CEET-J100M-CI0	CAPACITOR E/ALUMINUM	10uF M 50V 5x11 T
C164	CEET-J4R7M-CI0	CAPACITOR E/ALUMINUM	4.7uF M 50V 5x11 T
C165	CEET-J100M-CI0	CAPACITOR E/ALUMINUM	10uF M 50V 5x11 T
		DIODES	
D101	DDTS-00070-SO0	DIODE-SI	1SS133 (40V 0.11A) DO-40 T
D102	DDTS-00070-SO0	DIODE-SI	1SS133 (40V 0.11A) DO-40 T
D103	DDTS-00070-SO0	DIODE-SI	1SS133 (40V 0.11A) DO-40 T
D104	DDTS-00070-SO0	DIODE-SI	1SS133 (40V 0.11A) DO-40 T
D105	DDTS-00070-SO0	DIODE-SI	1SS133 (40V 0.11A) DO-40 T
D106	DDTS-00070-SO0	DIODE-SI	1SS133 (40V 0.11A) DO-40 T
D107	DDTS-00070-SO0	DIODE-SI	1SS133 (40V 0.11A) DO-40 T
D108	DDTS-00070-SO0	DIODE-SI	1SS133 (40V 0.11A) DO-40 T
D109	DDTS-00070-SO0	DIODE-SI	1SS133 (40V 0.11A) DO-40 T
D110	DDTS-00070-SO0	DIODE-SI	1SS133 (40V 0.11A) DO-40 T
		COILS	
L101	KIBK-00190-E40	INDUCTOR	INDUCTOR, 0.7uH
L102	KIBK-00190-E40	INDUCTOR	INDUCTOR, 0.7uH
L103	KIBK-00190-E40	INDUCTOR	INDUCTOR, 0.7uH
L104	KIBK-00190-E40	INDUCTOR	INDUCTOR, 0.7uH
L105	KIBK-00190-E40	INDUCTOR	INDUCTOR, 0.7uH
		CONNECTORS	
CN101	KNCW-00240-AT9	CONNECTOR-WAFER	53014-10 2.0mm WHT
CN102	KNCW-00140-5TM	CONNECTOR-WAFER	5267-05A 2.5mm MILK
CW103	U810-7M412-200	WIRE-ASS'Y	1007#20 VIT-120 8P
CW104	U610-5M426-200	WIRE-ASS'Y	UL1007#20 GRN-260 6P
	U1T1-01520-Z10	WIRE-ASS'Y	1007#22 BLK-200 3.2pi
	U1T3-01330-T40	WIRE-ASS'Y	1007#18 BLK-300 YFH-800
		TRANSISTORS	
Q101	TRTA-0011G-SD0	TRANSISTOR P-H FREQ	KTA1268-GR TO92
Q102	TRTA-0011G-SD0	TRANSISTOR P-H FREQ	KTA1268-GR TO92
Q103	TRTA-0011G-SD0	TRANSISTOR P-H FREQ	KTA1268-GR TO92
Q104	TRTA-0011G-SD0	TRANSISTOR P-H FREQ	KTA1268-GR TO92
Q105	TRTA-0011G-SD0	TRANSISTOR P-H FREQ	KTA1268-GR TO92
Q106	TRTA-0011G-SD0	TRANSISTOR P-H FREQ	KTA1268-GR TO92
Q107	TRTA-0011G-SD0	TRANSISTOR P-H FREQ	KTA1268-GR TO92
Q108	TRTA-0011G-SD0	TRANSISTOR P-H FREQ	KTA1268-GR TO92
Q109	TRTC-0015G-SD0	TRANSISTOR N-H FREQ	KTC3200-GR TO92
Q110	TRTC-0015G-SD0	TRANSISTOR N-H FREQ	KTC3200-GR TO92
Q111	TRTC-0015G-SD0	TRANSISTOR N-H FREQ	KTC3200-GR TO92
Q112	TRTC-0015G-SD0	TRANSISTOR N-H FREQ	KTC3200-GR TO92
Q113	TRTA-0011G-SD0	TRANSISTOR P-H FREQ	KTA1268-GR TO92
Q114	TRTA-0011G-SD0	TRANSISTOR P-H FREQ	KTA1268-GR TO92
Q115	TRTA-0013Y-SD0	TRANSISTOR N-H FREQ	KTA1024-Y
Q116	TRTA-0013Y-SD0	TRANSISTOR N-H FREQ	KTA1024-Y
Q117	TRTC-0087Y-SD0	TRANSISTOR N-H FREQ	KTC3206-Y TO92L
Q118	TRTC-0087Y-SD0	TRANSISTOR N-H FREQ	KTC3206-Y TO92L

Ref. No.	Part No.	Description	
Q119	TRSC-01680-SB0	TRANSISTOR N-H FREQ	2SC4137 TO-126FP
Q120	TRSC-01680-SB0	TRANSISTOR N-H FREQ	2SC4137 TO-126FP
Q121	TRSC-01540-SJ0	TRANSISTOR N-H FREQ	2SC4883A
Q122	TRSC-01540-SJ0	TRANSISTOR N-H FREQ	2SC4883A
Q123	TRSA-01450-SJ0	TRANSISTOR N-H FREQ	2SA1859A
Q124	TRSA-01450-SJ0	TRANSISTOR N-H FREQ	2SA1859A
▲Q125	TRTC-0130Y-SJ0	TRANSISTOR N-H FREQ	2SC4468-Y TO3P
▲Q126	TRTC-0130Y-SJ0	TRANSISTOR N-H FREQ	2SC4468-Y TO3P
▲Q127	TRTA-0090Y-SJ0	TRANSISTOR P-H FREQ	2SA1695-Y TO3P
▲Q128	TRTA-0090Y-SJ0	TRANSISTOR P-H FREQ	2SA1695-Y TO3P
Q129	TRTC-0015G-SD0	TRANSISTOR N-H FREQ	KTC3200-GR TO92
Q130	TRTC-0015G-SD0	TRANSISTOR N-H FREQ	KTC3200-GR TO92
Q131	TRTA-0011G-SD0	TRANSISTOR P-H FREQ	KTA1268-GR TO92
Q132	TRTA-0011G-SD0	TRANSISTOR P-H FREQ	KTA1268-GR TO92
Q133	TRTA-0011G-SD0	TRANSISTOR P-H FREQ	KTA1268-GR TO92
Q134	TRTA-0011G-SD0	TRANSISTOR P-H FREQ	KTA1268-GR TO92
Q135	TRTA-0011G-SD0	TRANSISTOR P-H FREQ	KTA1268-GR TO92
Q136	TRTA-0011G-SD0	TRANSISTOR P-H FREQ	KTA1268-GR TO92
Q137	TRTA-0011G-SD0	TRANSISTOR P-H FREQ	KTA1268-GR TO92
Q138	TRTA-0011G-SD0	TRANSISTOR P-H FREQ	KTA1268-GR TO92
Q139	TRTC-0015G-SD0	TRANSISTOR N-H FREQ	KTC3200-GR TO92
Q140	TRTC-0015G-SD0	TRANSISTOR N-H FREQ	KTC3200-GR TO92
Q141	TRTC-0015G-SD0	TRANSISTOR N-H FREQ	KTC3200-GR TO92
Q142	TRTC-0015G-SD0	TRANSISTOR N-H FREQ	KTC3200-GR TO92
Q143	TRTA-0011G-SD0	TRANSISTOR P-H FREQ	KTA1268-GR TO92
Q144	TRTA-0011G-SD0	TRANSISTOR P-H FREQ	KTA1268-GR TO92
Q145	TRTA-0013Y-SD0	TRANSISTOR N-H FREQ	KTA1024-Y
Q146	TRTA-0013Y-SD0	TRANSISTOR N-H FREQ	KTA1024-Y
Q147	TRTC-0087Y-SD0	TRANSISTOR N-H FREQ	KTC3206-Y TO92L
Q148	TRTC-0087Y-SD0	TRANSISTOR N-H FREQ	KTC3206-Y TO92L
Q149	TRSC-01680-SB0	TRANSISTOR N-H FREQ	2SC4137 TO-126FP
Q150	TRSC-01680-SB0	TRANSISTOR N-H FREQ	2SC4137 TO-126FP
Q151	TRSC-01540-SJ0	TRANSISTOR N-H FREQ	2SC4883A
Q152	TRSC-01540-SJ0	TRANSISTOR N-H FREQ	2SC4883A
Q153	TRSA-01450-SJ0	TRANSISTOR N-H FREQ	2SA1859A
Q154	TRSA-01450-SJ0	TRANSISTOR N-H FREQ	2SA1859A
▲Q155	TRTC-0130Y-SJ0	TRANSISTOR N-H FREQ	2SC4468-Y TO3P
▲Q156	TRTC-0130Y-SJ0	TRANSISTOR N-H FREQ	2SC4468-Y TO3P
▲Q157	TRTA-0090Y-SJ0	TRANSISTOR P-H FREQ	2SA1695-Y TO3P
▲Q158	TRTA-0090Y-SJ0	TRANSISTOR P-H FREQ	2SA1695-Y TO3P
Q159	TRTC-0015G-SD0	TRANSISTOR N-H FREQ	KTC3200-GR TO92
Q160	TRTC-0015G-SD0	TRANSISTOR N-H FREQ	KTC3200-GR TO92
Q161	TRTA-0011G-SD0	TRANSISTOR P-H FREQ	KTA1268-GR TO92
Q162	TRTA-0011G-SD0	TRANSISTOR P-H FREQ	KTA1268-GR TO92
Q163	TRTA-0011G-SD0	TRANSISTOR P-H FREQ	KTA1268-GR TO92
Q164	TRTA-0011G-SD0	TRANSISTOR P-H FREQ	KTA1268-GR TO92
Q165	TRTC-0015G-SD0	TRANSISTOR N-H FREQ	KTC3200-GR TO92
Q166	TRTC-0015G-SD0	TRANSISTOR N-H FREQ	KTC3200-GR TO92
Q167	TRTA-0011G-SD0	TRANSISTOR P-H FREQ	KTA1268-GR TO92
Q168	TRTA-0013Y-SD0	TRANSISTOR N-H FREQ	KTA1024-Y
Q169	TRTC-0087Y-SD0	TRANSISTOR N-H FREQ	KTC3206-Y TO92L
Q170	TRSC-01680-SB0	TRANSISTOR N-H FREQ	2SC4137 TO-126FP
Q171	TRSC-01540-SJ0	TRANSISTOR N-H FREQ	2SC4883A
Q172	TRSA-01450-SJ0	TRANSISTOR N-H FREQ	2SA1859A
▲Q173	TRTC-0130Y-SJ0	TRANSISTOR N-H FREQ	2SC4468-Y TO3P
▲Q174	TRTA-0090Y-SJ0	TRANSISTOR P-H FREQ	2SA1695-Y TO3P
Q175	TRTC-0015G-SD0	TRANSISTOR N-H FREQ	KTC3200-GR TO92
Q276	TRTC-01700-SD0	TRANSISTOR N-H FREQ	KRC107M W/RESIST TO92M
		MISCELLANEOUS	
PCB	PCSR-04800-11B	PCB-AMP	A1R-480
		RESISTORS	
R101	RCFT-E102J-000	RESISTOR-CARBON FILM	1Kohm 1/5W J T
R102	RCFT-E102J-000	RESISTOR-CARBON FILM	1Kohm 1/5W J T
R103	RCFT-E333J-000	RESISTOR-CARBON FILM	33Kohm 1/5W J T
R104	RCFT-E333J-000	RESISTOR-CARBON FILM	33Kohm 1/5W J T
R105	RCFT-E150J-000	RESISTOR-CARBON FILM	15ohm 1/5W J T
R106	RCFT-E150J-000	RESISTOR-CARBON FILM	15ohm 1/5W J T
R107	RCFT-E751J-000	RESISTOR-CARBON FILM	750ohm 1/5W J T
R108	RCFT-E751J-000	RESISTOR-CARBON FILM	750ohm 1/5W J T
R109	RCFT-E150J-000	RESISTOR-CARBON FILM	15ohm 1/5W J T
R110	RCFT-E150J-000	RESISTOR-CARBON FILM	15ohm 1/5W J T
R111	RCFT-E751J-000	RESISTOR-CARBON FILM	750ohm 1/5W J T

Ref. No.	Part No.	Description	
R112	RCFT-E751J-000	RESISTOR-CARBON FILM	750ohm 1/5W J T
R113	RCFT-E680J-000	RESISTOR-CARBON FILM	68ohm 1/5W J T
R114	RCFT-E680J-000	RESISTOR-CARBON FILM	68ohm 1/5W J T
R115	RCFT-E681J-000	RESISTOR-CARBON FILM	680ohm 1/5W J T
R116	RCFT-E681J-000	RESISTOR-CARBON FILM	680ohm 1/5W J T
R117	RCFT-E333J-000	RESISTOR-CARBON FILM	33Kohm 1/5W J T
R118	RCFT-E333J-000	RESISTOR-CARBON FILM	33Kohm 1/5W J T
R119	RCFT-E103J-000	RESISTOR-CARBON FILM	10Kohm 1/5W J T
R120	RCFT-E103J-000	RESISTOR-CARBON FILM	10Kohm 1/5W J T
R121	RCFT-E151J-000	RESISTOR-CARBON FILM	150ohm 1/5W J T
R122	RCFT-E151J-000	RESISTOR-CARBON FILM	150ohm 1/5W J T
R123	RCFT-E182J-000	RESISTOR-CARBON FILM	1.8Kohm 1/5W J T
R124	RCFT-E182J-000	RESISTOR-CARBON FILM	1.8Kohm 1/5W J T
R125	RCFT-E333J-000	RESISTOR-CARBON FILM	33Kohm 1/5W J T
R126	RCFT-E333J-000	RESISTOR-CARBON FILM	33Kohm 1/5W J T
R127	RCFT-E561J-000	RESISTOR-CARBON FILM	560ohm 1/5W J T
R128	RCFT-E561J-000	RESISTOR-CARBON FILM	560ohm 1/5W J T
R129	RCFT-E561J-000	RESISTOR-CARBON FILM	560ohm 1/5W J T
R130	RCFT-E561J-000	RESISTOR-CARBON FILM	560ohm 1/5W J T
R131	RCFT-E561J-000	RESISTOR-CARBON FILM	560ohm 1/5W J T
R132	RCFT-E561J-000	RESISTOR-CARBON FILM	560ohm 1/5W J T
R133	RCFT-E561J-000	RESISTOR-CARBON FILM	560ohm 1/5W J T
R134	RCFT-E561J-000	RESISTOR-CARBON FILM	560ohm 1/5W J T
R135	RCFT-E561J-000	RESISTOR-CARBON FILM	560ohm 1/5W J T
R136	RCFT-E561J-000	RESISTOR-CARBON FILM	560ohm 1/5W J T
R137	RCFT-E561J-000	RESISTOR-CARBON FILM	560ohm 1/5W J T
R138	RCFT-E561J-000	RESISTOR-CARBON FILM	560ohm 1/5W J T
R139	RCFT-E472J-000	RESISTOR-CARBON FILM	4.7Kohm 1/5W J T
R140	RCFT-E472J-000	RESISTOR-CARBON FILM	4.7Kohm 1/5W J T
R141	RCFT-E223J-000	RESISTOR-CARBON FILM	22Kohm 1/5W J T
R142	RCFT-E223J-000	RESISTOR-CARBON FILM	22Kohm 1/5W J T
R143	RCFT-E223J-000	RESISTOR-CARBON FILM	22Kohm 1/5W J T
R144	RCFT-E223J-000	RESISTOR-CARBON FILM	22Kohm 1/5W J T
R145	RCFT-E122J-000	RESISTOR-CARBON FILM	1.2Kohm 1/5W J T
R146	RCFT-E122J-000	RESISTOR-CARBON FILM	1.2Kohm 1/5W J T
R147	RCFT-E821J-000	RESISTOR-CARBON FILM	820ohm 1/5W J T
R148	RCFT-E821J-000	RESISTOR-CARBON FILM	820ohm 1/5W J T
R149	RCFT-E821J-000	RESISTOR-CARBON FILM	820ohm 1/5W J T
R150	RCFT-E821J-000	RESISTOR-CARBON FILM	820ohm 1/5W J T
R151	RCFT-E820J-000	RESISTOR-CARBON FILM	82ohm 1/5W J T
R152	RCFT-E820J-000	RESISTOR-CARBON FILM	82ohm 1/5W J T
R153	RCFT-E820J-000	RESISTOR-CARBON FILM	82ohm 1/5W J T
R154	RCFT-E820J-000	RESISTOR-CARBON FILM	82ohm 1/5W J T
R155	RMOR-H470J-0C0	RESISTOR-METAL OXIDE	47ohm 1W J ERG(X)1SJ470E
R156	RMOR-H470J-0C0	RESISTOR-METAL OXIDE	47ohm 1W J ERG(X)1SJ470E
R157	RMOR-H470J-0C0	RESISTOR-METAL OXIDE	47ohm 1W J ERG(X)1SJ470E
R158	RMOR-H470J-0C0	RESISTOR-METAL OXIDE	47ohm 1W J ERG(X)1SJ470E
R159	RCFT-E820J-000	RESISTOR-CARBON FILM	82ohm 1/5W J T
R160	RCFT-E820J-000	RESISTOR-CARBON FILM	82ohm 1/5W J T
▲R161	RMFS-LR27J-0J0	RESISTOR-METAL PLATE	0.27ohm 5W J MPR-55R
▲R162	RMFS-LR27J-0J0	RESISTOR-METAL PLATE	0.27ohm 5W J MPR-55R
R163	RCFT-E390J-000	RESISTOR-CARBON FILM	39ohm 1/5W J T
R164	RCFT-E390J-000	RESISTOR-CARBON FILM	39ohm 1/5W J T
R165	RCFT-E390J-000	RESISTOR-CARBON FILM	39ohm 1/5W J T
R166	RCFT-E390J-000	RESISTOR-CARBON FILM	39ohm 1/5W J T
R167	RCFT-E390J-000	RESISTOR-CARBON FILM	39ohm 1/5W J T
R168	RCFT-E390J-000	RESISTOR-CARBON FILM	39ohm 1/5W J T
R169	RCFT-E390J-000	RESISTOR-CARBON FILM	39ohm 1/5W J T
R170	RCFT-E390J-000	RESISTOR-CARBON FILM	39ohm 1/5W J T
R171	RCFT-E182J-000	RESISTOR-CARBON FILM	1.8Kohm 1/5W J T
R172	RCFT-E182J-000	RESISTOR-CARBON FILM	1.8Kohm 1/5W J T
R173	RCFT-E202J-000	RESISTOR-CARBON FILM	2Kohm 1/5W J T
R174	RCFT-E202J-000	RESISTOR-CARBON FILM	2Kohm 1/5W J T
R175	RCFT-E911J-000	RESISTOR-CARBON FILM	910ohm 1/5W J T
R176	RCFT-E911J-000	RESISTOR-CARBON FILM	910ohm 1/5W J T
R177	RCFT-E682J-000	RESISTOR-CARBON FILM	6.8Kohm 1/5W J T
R178	RCFT-E682J-000	RESISTOR-CARBON FILM	6.8Kohm 1/5W J T
R179	RCFT-E243J-000	RESISTOR-CARBON FILM	24Kohm 1/5W J T
R180	RCFT-E243J-000	RESISTOR-CARBON FILM	24Kohm 1/5W J T
R181	RCFT-E102J-000	RESISTOR-CARBON FILM	1Kohm 1/5W J T
R182	RCFT-E102J-000	RESISTOR-CARBON FILM	1Kohm 1/5W J T
R183	RCFT-E333J-000	RESISTOR-CARBON FILM	33Kohm 1/5W J T
R184	RCFT-E333J-000	RESISTOR-CARBON FILM	33Kohm 1/5W J T
R185	RCFT-E150J-000	RESISTOR-CARBON FILM	15ohm 1/5W J T
R186	RCFT-E150J-000	RESISTOR-CARBON FILM	15ohm 1/5W J T
R187	RCFT-E751J-000	RESISTOR-CARBON FILM	750ohm 1/5W J T

Ref. No.	Part No.	Description	
R188	RCFT-E751J-000	RESISTOR-CARBON FILM	750ohm 1/5W J T
R189	RCFT-E150J-000	RESISTOR-CARBON FILM	15ohm 1/5W J T
R190	RCFT-E150J-000	RESISTOR-CARBON FILM	15ohm 1/5W J T
R191	RCFT-E751J-000	RESISTOR-CARBON FILM	750ohm 1/5W J T
R192	RCFT-E751J-000	RESISTOR-CARBON FILM	750ohm 1/5W J T
R193	RCFT-E680J-000	RESISTOR-CARBON FILM	68ohm 1/5W J T
R194	RCFT-E680J-000	RESISTOR-CARBON FILM	68ohm 1/5W J T
R195	RCFT-E681J-000	RESISTOR-CARBON FILM	680ohm 1/5W J T
R196	RCFT-E681J-000	RESISTOR-CARBON FILM	680ohm 1/5W J T
R197	RCFT-E333J-000	RESISTOR-CARBON FILM	33Kohm 1/5W J T
R198	RCFT-E333J-000	RESISTOR-CARBON FILM	33Kohm 1/5W J T
R199	RCFT-E103J-000	RESISTOR-CARBON FILM	10Kohm 1/5W J T
R200	RCFT-E103J-000	RESISTOR-CARBON FILM	10Kohm 1/5W J T
R201	RCFT-E151J-000	RESISTOR-CARBON FILM	150ohm 1/5W J T
R202	RCFT-E151J-000	RESISTOR-CARBON FILM	150ohm 1/5W J T
R203	RCFT-E182J-000	RESISTOR-CARBON FILM	1.8Kohm 1/5W J T
R204	RCFT-E182J-000	RESISTOR-CARBON FILM	1.8Kohm 1/5W J T
R205	RCFT-E333J-000	RESISTOR-CARBON FILM	33Kohm 1/5W J T
R206	RCFT-E333J-000	RESISTOR-CARBON FILM	33Kohm 1/5W J T
R207	RCFT-E561J-000	RESISTOR-CARBON FILM	560ohm 1/5W J T
R208	RCFT-E561J-000	RESISTOR-CARBON FILM	560ohm 1/5W J T
R209	RCFT-E561J-000	RESISTOR-CARBON FILM	560ohm 1/5W J T
R210	RCFT-E561J-000	RESISTOR-CARBON FILM	560ohm 1/5W J T
R211	RCFT-E561J-000	RESISTOR-CARBON FILM	560ohm 1/5W J T
R212	RCFT-E561J-000	RESISTOR-CARBON FILM	560ohm 1/5W J T
R213	RCFT-E561J-000	RESISTOR-CARBON FILM	560ohm 1/5W J T
R214	RCFT-E561J-000	RESISTOR-CARBON FILM	560ohm 1/5W J T
R215	RCFT-E561J-000	RESISTOR-CARBON FILM	560ohm 1/5W J T
R216	RCFT-E561J-000	RESISTOR-CARBON FILM	560ohm 1/5W J T
R217	RCFT-E561J-000	RESISTOR-CARBON FILM	560ohm 1/5W J T
R218	RCFT-E561J-000	RESISTOR-CARBON FILM	560ohm 1/5W J T
R219	RCFT-E472J-000	RESISTOR-CARBON FILM	4.7Kohm 1/5W J T
R220	RCFT-E472J-000	RESISTOR-CARBON FILM	4.7Kohm 1/5W J T
R221	RCFT-E223J-000	RESISTOR-CARBON FILM	22Kohm 1/5W J T
R222	RCFT-E223J-000	RESISTOR-CARBON FILM	22Kohm 1/5W J T
R223	RCFT-E223J-000	RESISTOR-CARBON FILM	22Kohm 1/5W J T
R224	RCFT-E223J-000	RESISTOR-CARBON FILM	22Kohm 1/5W J T
R225	RCFT-E122J-000	RESISTOR-CARBON FILM	1.2Kohm 1/5W J T
R226	RCFT-E122J-000	RESISTOR-CARBON FILM	1.2Kohm 1/5W J T
R227	RCFT-E821J-000	RESISTOR-CARBON FILM	820ohm 1/5W J T
R228	RCFT-E821J-000	RESISTOR-CARBON FILM	820ohm 1/5W J T
R229	RCFT-E821J-000	RESISTOR-CARBON FILM	820ohm 1/5W J T
R230	RCFT-E821J-000	RESISTOR-CARBON FILM	820ohm 1/5W J T
R231	RCFT-E820J-000	RESISTOR-CARBON FILM	82ohm 1/5W J T
R232	RCFT-E820J-000	RESISTOR-CARBON FILM	82ohm 1/5W J T
R233	RCFT-E820J-000	RESISTOR-CARBON FILM	82ohm 1/5W J T
R234	RCFT-E820J-000	RESISTOR-CARBON FILM	82ohm 1/5W J T
R235	RMOR-H470J-0C0	RESISTOR-METAL OXIDE	47ohm 1W J ERG(X)1SJ470E
R236	RMOR-H470J-0C0	RESISTOR-METAL OXIDE	47ohm 1W J ERG(X)1SJ470E
R237	RMOR-H470J-0C0	RESISTOR-METAL OXIDE	47ohm 1W J ERG(X)1SJ470E
R238	RMOR-H470J-0C0	RESISTOR-METAL OXIDE	47ohm 1W J ERG(X)1SJ470E
R239	RCFT-E820J-000	RESISTOR-CARBON FILM	82ohm 1/5W J T
R240	RCFT-E820J-000	RESISTOR-CARBON FILM	82ohm 1/5W J T
▲R241	RMFS-LR27J-0J0	RESISTOR-METAL PLATE	0.27ohm 5W J MPR-55R
▲R242	RMFS-LR27J-0J0	RESISTOR-METAL PLATE	0.27ohm 5W J MPR-55R
R243	RCFT-E390J-000	RESISTOR-CARBON FILM	39ohm 1/5W J T
R244	RCFT-E390J-000	RESISTOR-CARBON FILM	39ohm 1/5W J T
R245	RCFT-E390J-000	RESISTOR-CARBON FILM	39ohm 1/5W J T
R246	RCFT-E390J-000	RESISTOR-CARBON FILM	39ohm 1/5W J T
R247	RCFT-E390J-000	RESISTOR-CARBON FILM	39ohm 1/5W J T
R248	RCFT-E390J-000	RESISTOR-CARBON FILM	39ohm 1/5W J T
R249	RCFT-E390J-000	RESISTOR-CARBON FILM	39ohm 1/5W J T
R250	RCFT-E390J-000	RESISTOR-CARBON FILM	39ohm 1/5W J T
R251	RCFT-E182J-000	RESISTOR-CARBON FILM	1.8Kohm 1/5W J T
R252	RCFT-E182J-000	RESISTOR-CARBON FILM	1.8Kohm 1/5W J T
R253	RCFT-E202J-000	RESISTOR-CARBON FILM	2Kohm 1/5W J T
R254	RCFT-E202J-000	RESISTOR-CARBON FILM	2Kohm 1/5W J T
R255	RCFT-E911J-000	RESISTOR-CARBON FILM	910ohm 1/5W J T
R256	RCFT-E911J-000	RESISTOR-CARBON FILM	910ohm 1/5W J T
R257	RCFT-E682J-000	RESISTOR-CARBON FILM	6.8Kohm 1/5W J T
R258	RCFT-E682J-000	RESISTOR-CARBON FILM	6.8Kohm 1/5W J T
R259	RCFT-E243J-000	RESISTOR-CARBON FILM	24Kohm 1/5W J T
R260	RCFT-E243J-000	RESISTOR-CARBON FILM	24Kohm 1/5W J T
R261	RCFT-E102J-000	RESISTOR-CARBON FILM	1Kohm 1/5W J T
R262	RCFT-E333J-000	RESISTOR-CARBON FILM	33Kohm 1/5W J T
R263	RCFT-E150J-000	RESISTOR-CARBON FILM	15ohm 1/5W J T

Ref. No.	Part No.	Description	
R264	RCFT-E751J-000	RESISTOR-CARBON FILM	750ohm 1/5W J T
R265	RCFT-E150J-000	RESISTOR-CARBON FILM	15ohm 1/5W J T
R266	RCFT-E751J-000	RESISTOR-CARBON FILM	750ohm 1/5W J T
R267	RCFT-E680J-000	RESISTOR-CARBON FILM	68ohm 1/5W J T
R268	RCFT-E681J-000	RESISTOR-CARBON FILM	680ohm 1/5W J T
R269	RCFT-E333J-000	RESISTOR-CARBON FILM	33Kohm 1/5W J T
R270	RCFT-E103J-000	RESISTOR-CARBON FILM	10Kohm 1/5W J T
R271	RCFT-E151J-000	RESISTOR-CARBON FILM	150ohm 1/5W J T
R272	RCFT-E182J-000	RESISTOR-CARBON FILM	1.8Kohm 1/5W J T
R273	RCFT-E333J-000	RESISTOR-CARBON FILM	33Kohm 1/5W J T
R274	RCFT-E561J-000	RESISTOR-CARBON FILM	560ohm 1/5W J T
R275	RCFT-E561J-000	RESISTOR-CARBON FILM	560ohm 1/5W J T
R276	RCFT-E561J-000	RESISTOR-CARBON FILM	560ohm 1/5W J T
R277	RCFT-E561J-000	RESISTOR-CARBON FILM	560ohm 1/5W J T
R278	RCFT-E561J-000	RESISTOR-CARBON FILM	560ohm 1/5W J T
R279	RCFT-E561J-000	RESISTOR-CARBON FILM	560ohm 1/5W J T
R280	RCFT-E472J-000	RESISTOR-CARBON FILM	4.7Kohm 1/5W J T
R281	RCFT-E223J-000	RESISTOR-CARBON FILM	22Kohm 1/5W J T
R282	RCFT-E223J-000	RESISTOR-CARBON FILM	22Kohm 1/5W J T
R283	RCFT-E122J-000	RESISTOR-CARBON FILM	1.2Kohm 1/5W J T
R284	RCFT-E821J-000	RESISTOR-CARBON FILM	820ohm 1/5W J T
R285	RCFT-E821J-000	RESISTOR-CARBON FILM	820ohm 1/5W J T
R286	RCFT-E820J-000	RESISTOR-CARBON FILM	82ohm 1/5W J T
R287	RCFT-E820J-000	RESISTOR-CARBON FILM	82ohm 1/5W J T
R288	RMOR-H470J-0C0	RESISTOR-METAL OXIDE	47ohm 1W J ERG(X)1SJ470E
R289	RMOR-H470J-0C0	RESISTOR-METAL OXIDE	47ohm 1W J ERG(X)1SJ470E
R290	RCFT-E820J-000	RESISTOR-CARBON FILM	82ohm 1/5W J T
▲R291	RMFS-LR27J-0J0	RESISTOR-METAL PLATE	0.27ohm 5W J MPR-55R
R292	RCFT-E390J-000	RESISTOR-CARBON FILM	39ohm 1/5W J T
R293	RCFT-E390J-000	RESISTOR-CARBON FILM	39ohm 1/5W J T
R294	RCFT-E390J-000	RESISTOR-CARBON FILM	39ohm 1/5W J T
R295	RCFT-E390J-000	RESISTOR-CARBON FILM	39ohm 1/5W J T
R296	RCFT-E182J-000	RESISTOR-CARBON FILM	1.8Kohm 1/5W J T
R297	RCFT-E202J-000	RESISTOR-CARBON FILM	2Kohm 1/5W J T
R298	RCFT-E911J-000	RESISTOR-CARBON FILM	910ohm 1/5W J T
R299	RCFT-E682J-000	RESISTOR-CARBON FILM	6.8Kohm 1/5W J T
R300	RCFT-E243J-000	RESISTOR-CARBON FILM	24Kohm 1/5W J T
R301	RCFT-E334J-000	RESISTOR-CARBON FILM	330Kohm 1/5W J T

2-1. INPUT & PRO-LOGIC P.C.BOARD

		TRANSISTORS	
Q401	TRTC-01700-SD0	TRANSISTOR N-H FREQ	KRC107M W/RESIST TO92M
Q402	TRTA-00940-SD0	TRANSISTOR P-H FREQ	KRA107M W/RESIST TO92M
Q403	TRTC-01700-SD0	TRANSISTOR N-H FREQ	KRC107M W/RESIST TO92M
Q404	TRTC-0016G-SD0	TRANSISTOR N-H FREQ	KTC3198-GR TO92
Q405	TRTC-0016G-SD0	TRANSISTOR N-H FREQ	KTC3198-GR TO92

		RESISTORS	
R401	RCFT-E334J-000	RESISTOR-CARBON FILM	330Kohm 1/5W J T
R402	RCFT-E243J-000	RESISTOR-CARBON FILM	24Kohm 1/5W J T
R403	RCFT-E243J-000	RESISTOR-CARBON FILM	24Kohm 1/5W J T
R404	RCFT-E513J-000	RESISTOR-CARBON FILM	51Kohm 1/5W J T
R405	RCFT-E513J-000	RESISTOR-CARBON FILM	51Kohm 1/5W J T
R406	RCFT-E512J-000	RESISTOR-CARBON FILM	5.1Kohm 1/5W J T
R407	RCFT-E512J-000	RESISTOR-CARBON FILM	5.1Kohm 1/5W J T
R408	RCFT-E103J-000	RESISTOR-CARBON FILM	10Kohm 1/5W J T
R409	RCFT-E105J-000	RESISTOR-CARBON FILM	1Mohm 1/5W J T
R410	RCFT-E225J-000	RESISTOR-CARBON FILM	2.2Mohm 1/5W J T
R411	RCFT-E104J-000	RESISTOR-CARBON FILM	100Kohm 1/5W J T
R412	RCFT-E224J-000	RESISTOR-CARBON FILM	220Kohm 1/5W J T
R413	RCFT-E223J-000	RESISTOR-CARBON FILM	22Kohm 1/5W J T
R414	RCFT-E223J-000	RESISTOR-CARBON FILM	22Kohm 1/5W J T
R415	RCFT-E473J-000	RESISTOR-CARBON FILM	47Kohm 1/5W J T
R416	RCFT-E153J-000	RESISTOR-CARBON FILM	15Kohm 1/5W J T
R417	RCFT-E752J-000	RESISTOR-CARBON FILM	7.5Kohm 1/5W J T
R418	RCFT-E473J-000	RESISTOR-CARBON FILM	47Kohm 1/5W J T
R419	RCFT-E752J-000	RESISTOR-CARBON FILM	7.5Kohm 1/5W J T
R420	RCFT-E153J-000	RESISTOR-CARBON FILM	15Kohm 1/5W J T
R421	RCFT-E203J-000	RESISTOR-CARBON FILM	20Kohm 1/5W J T
R422	RCFT-E102J-000	RESISTOR-CARBON FILM	1Kohm 1/5W J T
R423	RCFT-E471J-000	RESISTOR-CARBON FILM	470ohm 1/5W J T
R424	RCFT-E102J-000	RESISTOR-CARBON FILM	1Kohm 1/5W J T
R425	RCFT-E223J-000	RESISTOR-CARBON FILM	22Kohm 1/5W J T
R426	RCFT-E102J-000	RESISTOR-CARBON FILM	1Kohm 1/5W J T

Ref. No.	Part No.	Description	
R427	RCFT-E152J-000	RESISTOR-CARBON FILM	1.5Kohm 1/5W J T
R428	RCFT-E471J-000	RESISTOR-CARBON FILM	470ohm 1/5W J T
R429	RCFT-E104J-000	RESISTOR-CARBON FILM	100Kohm 1/5W J T
R430	RCFT-E470J-000	RESISTOR-CARBON FILM	47ohm 1/5W J T
R431	RCFT-E102J-000	RESISTOR-CARBON FILM	1Kohm 1/5W J T
R432	RCFT-E223J-000	RESISTOR-CARBON FILM	22Kohm 1/5W J T
R433	RCFT-E102J-000	RESISTOR-CARBON FILM	1Kohm 1/5W J T
R434	RCFT-E152J-000	RESISTOR-CARBON FILM	1.5Kohm 1/5W J T
R435	RCFT-E471J-000	RESISTOR-CARBON FILM	470ohm 1/5W J T
R436	RCFT-E104J-000	RESISTOR-CARBON FILM	100Kohm 1/5W J T
R437	RCFT-E470J-000	RESISTOR-CARBON FILM	47ohm 1/5W J T
R438	RCFT-E102J-000	RESISTOR-CARBON FILM	1Kohm 1/5W J T
R439	RCFT-E102J-000	RESISTOR-CARBON FILM	1Kohm 1/5W J T
R440	RCFT-E102J-000	RESISTOR-CARBON FILM	1Kohm 1/5W J T
R441	RCFT-E102J-000	RESISTOR-CARBON FILM	1Kohm 1/5W J T
R442	RCFT-E104J-000	RESISTOR-CARBON FILM	100Kohm 1/5W J T
R443	RCFT-E104J-000	RESISTOR-CARBON FILM	100Kohm 1/5W J T
R444	RCFT-E101J-000	RESISTOR-CARBON FILM	100ohm 1/5W J T
R445	RCFT-E101J-000	RESISTOR-CARBON FILM	100ohm 1/5W J T
R446	RCFT-E102J-000	RESISTOR-CARBON FILM	1Kohm 1/5W J T
R447	RCFT-E102J-000	RESISTOR-CARBON FILM	1Kohm 1/5W J T
R448	RCFT-E104J-000	RESISTOR-CARBON FILM	100Kohm 1/5W J T
R449	RCFT-E104J-000	RESISTOR-CARBON FILM	100Kohm 1/5W J T
R450	RCFT-E751J-000	RESISTOR-CARBON FILM	750ohm 1/5W J T
R451	RCFT-E751J-000	RESISTOR-CARBON FILM	750ohm 1/5W J T
R452	RCFT-E564J-000	RESISTOR-CARBON FILM	560Kohm 1/5W J T
R453	RCFT-E564J-000	RESISTOR-CARBON FILM	560Kohm 1/5W J T
R454	RCFT-E473J-000	RESISTOR-CARBON FILM	47Kohm 1/5W J T
R455	RCFT-E473J-000	RESISTOR-CARBON FILM	47Kohm 1/5W J T
R456	RCFT-E104J-000	RESISTOR-CARBON FILM	100Kohm 1/5W J T
R457	RCFT-E104J-000	RESISTOR-CARBON FILM	100Kohm 1/5W J T
R458	RCFT-E471J-000	RESISTOR-CARBON FILM	470ohm 1/5W J T
R459	RCFT-E471J-000	RESISTOR-CARBON FILM	470ohm 1/5W J T
R460	RCFT-E104J-000	RESISTOR-CARBON FILM	100Kohm 1/5W J T
R461	RCFT-E104J-000	RESISTOR-CARBON FILM	100Kohm 1/5W J T
R462	RCFT-E471J-000	RESISTOR-CARBON FILM	470ohm 1/5W J T
R463	RCFT-E471J-000	RESISTOR-CARBON FILM	470ohm 1/5W J T
R464	RCFT-E104J-000	RESISTOR-CARBON FILM	100Kohm 1/5W J T
R465	RCFT-E104J-000	RESISTOR-CARBON FILM	100Kohm 1/5W J T
R466	RCFT-E104J-000	RESISTOR-CARBON FILM	100Kohm 1/5W J T
R467	RCFT-E104J-000	RESISTOR-CARBON FILM	100Kohm 1/5W J T
R468	RCFT-E471J-000	RESISTOR-CARBON FILM	470ohm 1/5W J T
R469	RCFT-E471J-000	RESISTOR-CARBON FILM	470ohm 1/5W J T
R470	RCFT-E473J-000	RESISTOR-CARBON FILM	47Kohm 1/5W J T
R471	RCFT-E473J-000	RESISTOR-CARBON FILM	47Kohm 1/5W J T
R472	RCFT-E221J-000	RESISTOR-CARBON FILM	220ohm 1/5W J T
R473	RCFT-E221J-000	RESISTOR-CARBON FILM	220ohm 1/5W J T
R474	RCFT-E221J-000	RESISTOR-CARBON FILM	220ohm 1/5W J T
R475	RCFT-E102J-000	RESISTOR-CARBON FILM	1Kohm 1/5W J T
R476	RCFT-E102J-000	RESISTOR-CARBON FILM	1Kohm 1/5W J T
R477	RCFT-E102J-000	RESISTOR-CARBON FILM	1Kohm 1/5W J T
R478	RCFT-E221J-000	RESISTOR-CARBON FILM	220ohm 1/5W J T
R479	RCFT-E221J-000	RESISTOR-CARBON FILM	220ohm 1/5W J T
R480	RCFT-E104J-000	RESISTOR-CARBON FILM	100Kohm 1/5W J T
R481	RCFT-E103J-000	RESISTOR-CARBON FILM	10Kohm 1/5W J T
R482	RCFT-E103J-000	RESISTOR-CARBON FILM	10Kohm 1/5W J T
R483	RCFT-E221J-000	RESISTOR-CARBON FILM	220ohm 1/5W J T
R484	RCFT-E103J-000	RESISTOR-CARBON FILM	10Kohm 1/5W J T
R485	RCFT-E103J-000	RESISTOR-CARBON FILM	10Kohm 1/5W J T
R486	RCFT-E103J-000	RESISTOR-CARBON FILM	10Kohm 1/5W J T
R487	RCFT-E103J-000	RESISTOR-CARBON FILM	10Kohm 1/5W J T
R488	RCFT-E103J-000	RESISTOR-CARBON FILM	10Kohm 1/5W J T
R489	RCFT-E103J-000	RESISTOR-CARBON FILM	10Kohm 1/5W J T
R490	RCFT-E471J-000	RESISTOR-CARBON FILM	470ohm 1/5W J T
R491	RCFT-E471J-000	RESISTOR-CARBON FILM	470ohm 1/5W J T
R492	RCFT-E471J-000	RESISTOR-CARBON FILM	470ohm 1/5W J T
R493	RCFT-E471J-000	RESISTOR-CARBON FILM	470ohm 1/5W J T
R494	RCFT-E471J-000	RESISTOR-CARBON FILM	470ohm 1/5W J T
R495	RCFT-E471J-000	RESISTOR-CARBON FILM	470ohm 1/5W J T
R496	RCFT-E471J-000	RESISTOR-CARBON FILM	470ohm 1/5W J T
R497	RCFT-E471J-000	RESISTOR-CARBON FILM	470ohm 1/5W J T
R498	RCFT-E471J-000	RESISTOR-CARBON FILM	470ohm 1/5W J T
R499	RCFT-E471J-000	RESISTOR-CARBON FILM	470ohm 1/5W J T
R500	RCFT-E471J-000	RESISTOR-CARBON FILM	470ohm 1/5W J T
R501	RCFT-E471J-000	RESISTOR-CARBON FILM	470ohm 1/5W J T
R502	RCFT-E471J-000	RESISTOR-CARBON FILM	470ohm 1/5W J T

Ref. No.	Part No.	Description	
R503	RCFT-E471J-000	RESISTOR-CARBON FILM	470ohm 1/5W J T
R504	RCFT-E471J-000	RESISTOR-CARBON FILM	470ohm 1/5W J T
R505	RCFT-E471J-000	RESISTOR-CARBON FILM	470ohm 1/5W J T
R506	RCFT-E104J-000	RESISTOR-CARBON FILM	100Kohm 1/5W J T
R507	RCFT-E104J-000	RESISTOR-CARBON FILM	100Kohm 1/5W J T
R508	RCFT-E104J-000	RESISTOR-CARBON FILM	100Kohm 1/5W J T
R509	RCFT-E104J-000	RESISTOR-CARBON FILM	100Kohm 1/5W J T
R510	RCFT-E103J-000	RESISTOR-CARBON FILM	10Kohm 1/5W J T
R511	RCFT-E103J-000	RESISTOR-CARBON FILM	10Kohm 1/5W J T
R512	RCFT-E221J-000	RESISTOR-CARBON FILM	220ohm 1/5W J T
R513	RCFT-E221J-000	RESISTOR-CARBON FILM	220ohm 1/5W J T
R514	RCFT-E104J-000	RESISTOR-CARBON FILM	100Kohm 1/5W J T
R515	RCFT-E221J-000	RESISTOR-CARBON FILM	220ohm 1/5W J T
R516	RCFT-E102J-000	RESISTOR-CARBON FILM	1Kohm 1/5W J T
R517	RCFT-E102J-000	RESISTOR-CARBON FILM	1Kohm 1/5W J T
R518	RCFT-E102J-000	RESISTOR-CARBON FILM	1Kohm 1/5W J T
R519	RCFT-E221J-000	RESISTOR-CARBON FILM	220ohm 1/5W J T
R520	RCFT-E243J-000	RESISTOR-CARBON FILM	24Kohm 1/5W J T
R521	RCFT-E224J-000	RESISTOR-CARBON FILM	220Kohm 1/5W J T
R522	RCFT-E243J-000	RESISTOR-CARBON FILM	24Kohm 1/5W J T
R523	RCFT-E224J-000	RESISTOR-CARBON FILM	220Kohm 1/5W J T
R525	RCFT-E100J-000	RESISTOR-CARBON FILM	10ohm 1/5W J T
R526	RCFT-E100J-000	RESISTOR-CARBON FILM	10ohm 1/5W J T
R527	RCFT-E241J-000	RESISTOR-CARBON FILM	240ohm 1/5W J T
R528	RCFT-E102J-000	RESISTOR-CARBON FILM	1Kohm 1/5W J T
		CAPACITORS	
C401	CEET-F470M-CI0	CAPACITOR E/ALUMINUM	47uF M 25V 5x11 T
C402	CEET-J2R2M-CI0	CAPACITOR E/ALUMINUM	2.2uF M 50V 5x11 T
C403	CFMT-N104J-JK0	CAPACITOR F/POLYESTR	0.10uF J 100V 12.1x14 T
C404	CFMT-N223J-EK0	CAPACITOR F/POLYESTR	0.022uF J 100V 7.4x13 T
C405	CFMT-N473J-GK0	CAPACITOR F/POLYESTR	0.047uF J 100V 8.9x13. T
C406	CFMT-N473J-GK0	CAPACITOR F/POLYESTR	0.047uF J 100V 8.9x13. T
C407	CFMT-N104J-JK0	CAPACITOR F/POLYESTR	0.10uF J 100V 12.1x14 T
C408	CFMT-N104J-JK0	CAPACITOR F/POLYESTR	0.10uF J 100V 12.1x14 T
C409	CFMT-N223J-EK0	CAPACITOR F/POLYESTR	0.022uF J 100V 7.4x13 T
C410	CFMT-L224J-EF0	CAPACITOR F/POLYESTR	0.22uF J 63V 7.5x8.5 TL
C411	CFMT-N104J-JK0	CAPACITOR F/POLYESTR	0.10uF J 100V 12.1x14 T
C412	CFMT-L224J-EF0	CAPACITOR F/POLYESTR	0.22uF J 63V 7.5x8.5 TL
C413	CEET-J4R7M-CI0	CAPACITOR E/ALUMINUM	4.7uF M 50V 5x11 T
C414	CEET-J4R7M-CI0	CAPACITOR E/ALUMINUM	4.7uF M 50V 5x11 T
C415	CFMT-L224J-EF0	CAPACITOR F/POLYESTR	0.22uF J 63V 7.5x8.5 TL
C416	CFMT-L224J-EF0	CAPACITOR F/POLYESTR	0.22uF J 63V 7.5x8.5 TL
C417	CFMT-N473J-GK0	CAPACITOR F/POLYESTR	0.047uF J 100V 8.9x13. T
C418	CFMT-N562J-DJ0	CAPACITOR F/POLYESTR	0.0056uF J 100V 5.8x12 T
C419	CFMT-N104J-JK0	CAPACITOR F/POLYESTR	0.10uF J 100V 12.1x14 T
C420	CFMT-N104J-JK0	CAPACITOR F/POLYESTR	0.10uF J 100V 12.1x14 T
C421	CFMT-L684J-F10	CAPACITOR F/POLYESTR	0.68uF J 63V 8x11.5 TL
C422	CFST-O821J-CJ0	CAPACITOR F/STYROL	820PF J 125V 5.5x12 T
C423	CCAT-J471K-AAB	CAPACITOR CERAMIC	470PF K 50V B T
C424	CFMT-N122J-CJ0	CAPACITOR F/POLYESTR	0.0012uF J 100V 5.4x12 T
C425	CFMT-N103J-DE0	CAPACITOR F/POLYESTR	0.01uF J 100V 6x7 T
C424	CFMT-N122J-CJ0	CAPACITOR F/POLYESTR	0.0012uF J 100V 5.4x12 T
C426	CFMT-N683J-HK0	CAPACITOR F/POLYESTR	0.068uF J 100V 9.9x14 T
C427	CFMT-N104J-JK0	CAPACITOR F/POLYESTR	0.10uF J 100V 12.1x14 T
C428	CFMT-N104J-JK0	CAPACITOR F/POLYESTR	0.10uF J 100V 12.1x14 T
C429	CFMT-N683J-HK0	CAPACITOR F/POLYESTR	0.068uF J 100V 9.9x14 T
C430	CFMT-N103J-DE0	CAPACITOR F/POLYESTR	0.01uF J 100V 6x7 T
C431	CFMT-L105J-FJ0	CAPACITOR F/POLYESTR	1uF J 63V 8x12.5 TL
C432	CEET-F220M-CI0	CAPACITOR E/ALUMINUM	22uF M 25V 5x11 T
C433	CEET-J2R2M-CI0	CAPACITOR E/ALUMINUM	2.2uF M 50V 5x11 T
C434	CEET-J2R2M-CI0	CAPACITOR E/ALUMINUM	2.2uF M 50V 5x11 T
C435	CEET-J2R2M-CI0	CAPACITOR E/ALUMINUM	2.2uF M 50V 5x11 T
C436	CFMT-N104J-JK0	CAPACITOR F/POLYESTR	0.10uF J 100V 12.1x14 T
C437	CEET-F470M-CI0	CAPACITOR E/ALUMINUM	47uF M 25V 5x11 T
C438	CEET-E221M-FI0	CAPACITOR E/ALUMINUM	220uF M 16V 8x11.5 T
C439	CEET-F220M-CI0	CAPACITOR E/ALUMINUM	22uF M 25V 5x11 T
C440	CFMT-N562J-DJ0	CAPACITOR F/POLYESTR	0.0056uF J 100V 5.8x12 T
C441	CEET-J100M-CI0	CAPACITOR E/ALUMINUM	10uF M 50V 5x11 T
C442	CEET-J100M-CI0	CAPACITOR E/ALUMINUM	10uF M 50V 5x11 T
C443	CCCT-J681K-0BB	CAPACITOR CERAMIC	680PF K 50V B T
C444	CCCT-J681K-0BB	CAPACITOR CERAMIC	680PF K 50V B T
C445	CFMT-N104J-JK0	CAPACITOR F/POLYESTR	0.10uF J 100V 12.1x14 T
C446	CFMT-N104J-JK0	CAPACITOR F/POLYESTR	0.10uF J 100V 12.1x14 T
C447	CFMT-N104J-JK0	CAPACITOR F/POLYESTR	0.10uF J 100V 12.1x14 T

Ref. No.	Part No.	Description	
C448	CFMT-N104J-JK0	CAPACITOR F/POLYESTR	0.10uF J 100V 12.1x14 T
C449	CFMT-N104J-JK0	CAPACITOR F/POLYESTR	0.10uF J 100V 12.1x14 T
C450	CFMT-N152J-CJ0	CAPACITOR F/POLYESTR	0.0015uF J 100V 5.4x12 T
C451	CFMT-N152J-CJ0	CAPACITOR F/POLYESTR	0.0015uF J 100V 5.4x12 T
C452	CEET-F470M-CI0	CAPACITOR E/ALUMINUM	47uF M 25V 5x11 T
C453	CEET-F470M-CI0	CAPACITOR E/ALUMINUM	47uF M 25V 5x11 T
C455	CCAT-J470J-AAZ	CAPACITOR CERAMIC	47PF J 50V SL T
C456	CEET-J4R7M-CI0	CAPACITOR E/ALUMINUM	4.7uF M 50V 5x11 T
C457	CEET-F470M-CI0	CAPACITOR E/ALUMINUM	47uF M 25V 5x11 T
C458	CCAT-J470J-AAZ	CAPACITOR CERAMIC	47PF J 50V SL T
C459	CEET-J4R7M-CI0	CAPACITOR E/ALUMINUM	4.7uF M 50V 5x11 T
C460	CEET-F470M-CI0	CAPACITOR E/ALUMINUM	47uF M 25V 5x11 T
C463	CEET-E101M-DI0	CAPACITOR E/ALUMINUM	100uF M 16V 6.3x11 T
C464	CEET-J100M-CI0	CAPACITOR E/ALUMINUM	10uF M 50V 5x11 T
C465	CCAT-J101K-AAB	CAPACITOR CERAMIC	100PF K 50V B T
C466	CCAT-J101K-AAB	CAPACITOR CERAMIC	100PF K 50V B T
C467	CCAT-J101K-AAB	CAPACITOR CERAMIC	100PF K 50V B T
C468	CEET-F470M-CI0	CAPACITOR E/ALUMINUM	47uF M 25V 5x11 T
C469	CEET-F470M-CI0	CAPACITOR E/ALUMINUM	47uF M 25V 5x11 T
C470	CEET-F470M-CI0	CAPACITOR E/ALUMINUM	47uF M 25V 5x11 T
C471	CEET-F470M-CI0	CAPACITOR E/ALUMINUM	47uF M 25V 5x11 T
C473	CCTT-J101J-0CZ	CAPACITOR CERAMIC	100PF J 50V SL T "AVR18 ONLY"
C474	CCTT-J101J-0CZ	CAPACITOR CERAMIC	100PF J 50V SL T
C475	CCTT-J101J-0CZ	CAPACITOR CERAMIC	100PF J 50V SL T
C474	CCAT-J101K-AAB	CAPACITOR CERAMIC	100PF K 50V B T
C475	CCAT-J101K-AAB	CAPACITOR CERAMIC	100PF K 50V B T
C476	CEET-J4R7M-CI0	CAPACITOR E/ALUMINUM	4.7uF M 50V 5x11 T
C477	CEET-J4R7M-CI0	CAPACITOR E/ALUMINUM	4.7uF M 50V 5x11 T
C478	CCTT-J101J-0CZ	CAPACITOR CERAMIC	100PF J 50V SL T "AVR18 ONLY"
C479	CCAT-J102K-AAB	CAPACITOR CERAMIC	1000PF K 50V B T
C480	CCAT-J102K-AAB	CAPACITOR CERAMIC	1000PF K 50V B T
C481	CFMT-N562J-DJ0	CAPACITOR F/POLYESTR	0.0056uF J 100V 5.8x12 T
C482	CFMT-N562J-DJ0	CAPACITOR F/POLYESTR	0.0056uF J 100V 5.8x12 T
C483	CFMT-N152J-CJ0	CAPACITOR F/POLYESTR	0.0015uF J 100V 5.4x12 T
C484	CFMT-N152J-CJ0	CAPACITOR F/POLYESTR	0.0015uF J 100V 5.4x12 T
C485	CEET-D101M-CI0	CAPACITOR E/ALUMINUM	100uF M 10V 5x11 T
C486	CEET-D101M-CI0	CAPACITOR E/ALUMINUM	100uF M 10V 5x11 T
C487	CEET-J4R7M-CI0	CAPACITOR E/ALUMINUM	4.7uF M 50V 5x11 T
C488	CEET-J4R7M-CI0	CAPACITOR E/ALUMINUM	4.7uF M 50V 5x11 T
C489	CFMT-N152J-CJ0	CAPACITOR F/POLYESTR	0.0015uF J 100V 5.4x12 T
C490	CFMT-N152J-CJ0	CAPACITOR F/POLYESTR	0.0015uF J 100V 5.4x12 T
C491	CEET-J4R7M-CI0	CAPACITOR E/ALUMINUM	4.7uF M 50V 5x11 T
C492	CEET-J4R7M-CI0	CAPACITOR E/ALUMINUM	4.7uF M 50V 5x11 T
C493	CEET-J4R7M-CI0	CAPACITOR E/ALUMINUM	4.7uF M 50V 5x11 T
C494	CEET-J4R7M-CI0	CAPACITOR E/ALUMINUM	4.7uF M 50V 5x11 T
C495	CEET-F470M-CI0	CAPACITOR E/ALUMINUM	47uF M 25V 5x11 T
C496	CEET-F470M-CI0	CAPACITOR E/ALUMINUM	47uF M 25V 5x11 T
C497	CEET-F470M-CI0	CAPACITOR E/ALUMINUM	47uF M 25V 5x11 T
C499	CCAT-J101K-AAB	CAPACITOR CERAMIC	100PF K 50V B T
C500	CEET-F470M-CI0	CAPACITOR E/ALUMINUM	47uF M 25V 5x11 T
C501	CEET-J1R0M-CI0	CAPACITOR E/ALUMINUM	1.0uF M 50V 5x11 T
C502	CEET-F470M-CI0	CAPACITOR E/ALUMINUM	47uF M 25V 5x11 T
C503	CEET-F470M-CI0	CAPACITOR E/ALUMINUM	47uF M 25V 5x11 T
C504	CCAT-J473Z-AAF	CAPACITOR CERAMIC	0.047uF Z 50V F T
C505	CCAT-F103Z-AAF	CAPACITOR CERAMIC	0.01uF Z 25V F T
C506	CCTT-J101J-0CZ	CAPACITOR CERAMIC	100PF J 50V SL T "AVR18 ONLY"
C507	CCTT-J101J-0CZ	CAPACITOR CERAMIC	100PF J 50V SL T "AVR18 ONLY"
C508	CCTT-J101J-0CZ	CAPACITOR CERAMIC	100PF J 50V SL T "AVR18 ONLY"
C509	CCTT-J101J-0CZ	CAPACITOR CERAMIC	100PF J 50V SL T "AVR18 ONLY"
C510	CCTT-J101J-0CZ	CAPACITOR CERAMIC	100PF J 50V SL T "AVR18 ONLY"
C511	CCTT-J101J-0CZ	CAPACITOR CERAMIC	100PF J 50V SL T "AVR18 ONLY"
C512	CCTT-J101J-0CZ	CAPACITOR CERAMIC	100PF J 50V SL T "AVR18 ONLY"
C513	CCTT-J101J-0CZ	CAPACITOR CERAMIC	100PF J 50V SL T "AVR18 ONLY"
C514	CCTT-J101J-0CZ	CAPACITOR CERAMIC	100PF J 50V SL T "AVR18 ONLY"
C515	CCTT-J101J-0CZ	CAPACITOR CERAMIC	100PF J 50V SL T "AVR18 ONLY"
C516	CCTT-J101J-0CZ	CAPACITOR CERAMIC	100PF J 50V SL T "AVR18 ONLY"
C517	CCTT-J101J-0CZ	CAPACITOR CERAMIC	100PF J 50V SL T "AVR18 ONLY"
C518	CCTT-J101J-0CZ	CAPACITOR CERAMIC	100PF J 50V SL T "AVR18 ONLY"
C519	CCTT-J101J-0CZ	CAPACITOR CERAMIC	100PF J 50V SL T "AVR18 ONLY"
C520	CCTT-J101J-0CZ	CAPACITOR CERAMIC	100PF J 50V SL T "AVR18 ONLY"
C521	CCTT-J101J-0CZ	CAPACITOR CERAMIC	100PF J 50V SL T "AVR18 ONLY"
C522	CCTT-J101J-0CZ	CAPACITOR CERAMIC	100PF J 50V SL T "AVR18 ONLY"
C523	CCTT-J101J-0CZ	CAPACITOR CERAMIC	100PF J 50V SL T "AVR18 ONLY"
C524	CCTT-J101J-0CZ	CAPACITOR CERAMIC	100PF J 50V SL T "AVR18 ONLY"
C525	CCTT-J101J-0CZ	CAPACITOR CERAMIC	100PF J 50V SL T "AVR18 ONLY"
C526	CCTT-J101J-0CZ	CAPACITOR CERAMIC	100PF J 50V SL T "AVR18 ONLY"

Ref. No.	Part No.	Description	
C527	CCTT-J101J-0CZ	CAPACITOR CERAMIC	100PF J 50V SL T "AVR18 ONLY"
C528	CCTT-J101J-0CZ	CAPACITOR CERAMIC	100PF J 50V SL T "AVR18 ONLY"
C529	CCTT-J101J-0CZ	CAPACITOR CERAMIC	100PF J 50V SL T "AVR18 ONLY"
C530	CCTT-J101J-0CZ	CAPACITOR CERAMIC	100PF J 50V SL T "AVR18 ONLY"
C531	CCTT-J101J-0CZ	CAPACITOR CERAMIC	100PF J 50V SL T "AVR18 ONLY"
C532	CCTT-J101J-0CZ	CAPACITOR CERAMIC	100PF J 50V SL T "AVR18 ONLY"
C533	CCTT-J101J-0CZ	CAPACITOR CERAMIC	100PF J 50V SL T "AVR18 ONLY"
C534	CEET-J4R7M-CI0	CAPACITOR E/ALUMINUM	4.7uF M 50V 5x11 T
C535	CEET-J4R7M-CI0	CAPACITOR E/ALUMINUM	4.7uF M 50V 5x11 T
C536	CEET-J4R7M-CI0	CAPACITOR E/ALUMINUM	4.7uF M 50V 5x11 T
C537	CEET-J4R7M-CI0	CAPACITOR E/ALUMINUM	4.7uF M 50V 5x11 T
C538	CEET-F470M-CI0	CAPACITOR E/ALUMINUM	47uF M 25V 5x11 T
C539	CEET-F470M-CI0	CAPACITOR E/ALUMINUM	47uF M 25V 5x11 T
C540	CEET-J1R0M-CI0	CAPACITOR E/ALUMINUM	1.0uF M 50V 5x11 T
C541	CEET-F470M-CI0	CAPACITOR E/ALUMINUM	47uF M 25V 5x11 T
C542	CEET-F470M-CI0	CAPACITOR E/ALUMINUM	47uF M 25V 5x11 T
C543	CCAT-J101K-AAB	CAPACITOR CERAMIC	100PF K 50V B T
C545	CCAT-J104Z-AAF	CAPACITOR CERAMIC	0.1uF Z 50V F T
C546	CCAT-J104Z-AAF	CAPACITOR CERAMIC	0.1uF Z 50V F T
C547	CCAT-F103Z-AAF	CAPACITOR CERAMIC	0.01uF Z 25V F T
C548	CCAT-J104Z-AAF	CAPACITOR CERAMIC	0.1uF Z 50V F T
C549	CCAT-J104Z-AAF	CAPACITOR CERAMIC	0.1uF Z 50V F T
C550	CCAT-J104Z-AAF	CAPACITOR CERAMIC	0.1uF Z 50V F T
C551	CEET-J1R0M-CI0	CAPACITOR E/ALUMINUM	1.0uF M 50V 5x11 T
		DIODES	
D401	DDTS-00070-SO0	DIODE-SI	1SS133 (40V 0.11A) DO-40 T
D402	DDTS-00070-SO0	DIODE-SI	1SS133 (40V 0.11A) DO-40 T
D403	DDTZ-G056B-SOS	DIODE ZENER	MTZJ5.6B 5.45-5.73 DO34 T
D404	DDTZ-G100B-SO0	DIODE ZENER	MTZ10B 9.41-9.90 DO40 T
D405	DDTS-00070-SO0	DIODE-SI	1SS133 (40V 0.11A) DO-40 T
D406	DDTS-00070-SO0	DIODE-SI	1SS133 (40V 0.11A) DO-40 T
		INTEGRATED CIRCUITS	
IC401	ICOP-00432-SG0	IC OP AMP	NJM2068DD DIP8
IC402	ICDG-00260-S10	IC FUNCTION SELECTOR	LC7821 DIP30S
IC403	ICDG-00260-S10	IC FUNCTION SELECTOR	LC7821 DIP30S
IC404	ICOP-00134-SG0	IC DUAL OP AMP	NJM4558M SOP8
IC405	ICOP-00134-SG0	IC DUAL OP AMP	NJM4558M SOP8
IC406	ICLN-03690-S10	IC BIPOLAR SWITCH	LC4966 DIP14
IC407	ICLN-03310-SG0	IC DOLBY	NJW-1103F QFP80
IC408	ICOP-00134-SG0	IC DUAL OP AMP	NJM4558M SOP8
		CONNECTORS	
CN401	KNCW-01510-BS9	CONNECTOR-WAFER	35237-1110 2M/M 11P
CN402	KNCW-01510-CS9	CONNECTOR-WAFER	35237-1210 2M/M 12PIN
CN403	KNCW-00240-3T9	CONNECTOR-WAFER	53014-03 2.0mm WHT
CN404	KNCW-00240-3T9	CONNECTOR-WAFER	53014-03 2.0mm WHT
		MISCELLANEOUS	
L401	KI0T-4470K-003	COIL-INDUCTOR	47uH K LAL02 T "AVR18 ONLY"
L402	KI0T-4470K-003	COIL-INDUCTOR	47uH K LAL02 T "AVR18 ONLY"
X401	KTRE-00091-040	RESONATOR	CST4.00MGW-TF01 T05
JK401	SKRC-00400-041	SOCKET-RCA	JK0400450N
JK402	SKRC-00420-061	SOCKET-RCA	JK0600460N
JK403	SKRC-00420-061	SOCKET-RCA	JK0600460N
PCB	PCSR-04800-11B	PCB-INPUT & PRO LOGIC	A1R-480

2-2. VIDEO P.C.BOARD

		CONNECTORS	
CN901	KNCW-01510-9S9	CONNECTOR-WAFER	35237-0910 2M/M 9P
CN902	KNCW-00240-2T9	CONNECTOR-WAFER	53014-02 2.0mm WHT
		CAPACITORS	
C901	CEET-F330M-CI0	CAPACITOR E/ALUMINUM	33uF M 25V 5x11 T
C902	CEET-D471M-FI1	CAPACITOR E/ALUMINUM	470uF M 10V 8x11.5 U T
C903	CEET-F330M-CI0	CAPACITOR E/ALUMINUM	33uF M 25V 5x11 T
C904	CEET-F330M-CI0	CAPACITOR E/ALUMINUM	33uF M 25V 5x11 T
C905	CEET-D471M-FI1	CAPACITOR E/ALUMINUM	470uF M 10V 8x11.5 U T
C907	CEET-D471M-FI1	CAPACITOR E/ALUMINUM	470uF M 10V 8x11.5 U T

Ref. No.	Part No.	Description	
C908	CCCT-J104Z-0FF	CAPACITOR CERAMIC	0.1uF Z 50V F T
C909	CCCT-J104Z-0FF	CAPACITOR CERAMIC	0.1uF Z 50V F T
C910	CCAT-J104Z-AAF	CAPACITOR CERAMIC	0.1uF Z 50V F T
	CCAT-J120J-AAC	CAPACITOR CERAMIC	12PF J 50V C T
		INTEGRATED CIRCUITS	
IC901	ICLN-03650-SB0	IC VIDEO S/W	BA7625 DIP16
		RESISTORS	
R901	RCFT-E750J-000	RESISTOR-CARBON FILM	75ohm 1/5W J T
R902	RCFT-E750J-000	RESISTOR-CARBON FILM	75ohm 1/5W J T
R903	RCFT-E101J-000	RESISTOR-CARBON FILM	100ohm 1/5W J T
R904	RCFT-E101J-000	RESISTOR-CARBON FILM	100ohm 1/5W J T
R905	RCFT-E750J-000	RESISTOR-CARBON FILM	75ohm 1/5W J T
R906	RCFT-E750J-000	RESISTOR-CARBON FILM	75ohm 1/5W J T
R907	RCFT-E750J-000	RESISTOR-CARBON FILM	75ohm 1/5W J T
R908	RCFT-E101J-000	RESISTOR-CARBON FILM	100ohm 1/5W J T
R909	RCFT-E101J-000	RESISTOR-CARBON FILM	100ohm 1/5W J T
R910	RCFT-E3R3J-000	RESISTOR-CARBON FILM	3.3ohm 1/5W J T
R911	RCFT-E103J-000	RESISTOR-CARBON FILM	10Kohm 1/5W J T
		DIODES	
D901	DDTS-00070-SO0	DIODE-SI	1SS133 (40V 0.11A) DO-40 T
D902	DDTS-00070-SO0	DIODE-SI	1SS133 (40V 0.11A) DO-40 T
D903	DDTS-00070-SO0	DIODE-SI	1SS133 (40V 0.11A) DO-40 T
D904	DDTS-00070-SO0	DIODE-SI	1SS133 (40V 0.11A) DO-40 T
		MISCELLANEOUS	
JK901	SKRC-00470-031	SOCKET-RCA	JC0300125N 3P
JK902	SKRC-00680-021	PIN JACK	JC0200095N 2P
PCB	PCSR-04800-11B	PCB-VIDEO	A1R-480C
		TRANSISTORS	
Q901	TRTA-0008Y-SD0	TRANSISTOR P-H FREQ	KTA1266-Y TO92
Q902	TRTA-0008Y-SD0	TRANSISTOR P-H FREQ	KTA1266-Y TO92

3. PREOUT P.C.BOARD

		CAPACITORS	
C801	CCAT-J101K-AAB	CAPACITOR CERAMIC	100PF K 50V B T
C802	CCAT-J101K-AAB	CAPACITOR CERAMIC	100PF K 50V B T
C803	CFMT-N152J-CJ0	CAPACITOR F/POLYESTR	0.0015uF J 100V 5.4x12 T
C804	CFMT-N152J-CJ0	CAPACITOR F/POLYESTR	0.0015uF J 100V 5.4x12 T
C805	CFMT-N104J-JK0	CAPACITOR F/POLYESTR	0.10uF J 100V 12.1x14 T
C806	CFMT-N104J-JK0	CAPACITOR F/POLYESTR	0.10uF J 100V 12.1x14 T
C807	CEET-J4R7M-CI0	CAPACITOR E/ALUMINUM	4.7uF M 50V 5x11 T
C808	CEET-J4R7M-CI0	CAPACITOR E/ALUMINUM	4.7uF M 50V 5x11 T
C809	CEET-F470M-CI0	CAPACITOR E/ALUMINUM	47uF M 25V 5x11 T
C810	CEET-F470M-CI0	CAPACITOR E/ALUMINUM	47uF M 25V 5x11 T
C811	CEET-J100M-CI0	CAPACITOR E/ALUMINUM	10uF M 50V 5x11 T
C812	CEET-J100M-CI0	CAPACITOR E/ALUMINUM	10uF M 50V 5x11 T
C813	CCAT-J101K-AAB	CAPACITOR CERAMIC	100PF K 50V B T
C814	CCAT-J101K-AAB	CAPACITOR CERAMIC	100PF K 50V B T
C815	CFMT-N152J-CJ0	CAPACITOR F/POLYESTR	0.0015uF J 100V 5.4x12 T
C816	CFMT-N152J-CJ0	CAPACITOR F/POLYESTR	0.0015uF J 100V 5.4x12 T
C817	CFMT-N104J-JK0	CAPACITOR F/POLYESTR	0.10uF J 100V 12.1x14 T
C818	CFMT-N104J-JK0	CAPACITOR F/POLYESTR	0.10uF J 100V 12.1x14 T
C819	CEET-J4R7M-CI0	CAPACITOR E/ALUMINUM	4.7uF M 50V 5x11 T
C820	CEET-J4R7M-CI0	CAPACITOR E/ALUMINUM	4.7uF M 50V 5x11 T
C821	CEET-F470M-CI0	CAPACITOR E/ALUMINUM	47uF M 25V 5x11 T
C822	CEET-F470M-CI0	CAPACITOR E/ALUMINUM	47uF M 25V 5x11 T
C823	CEET-J100M-CI0	CAPACITOR E/ALUMINUM	10uF M 50V 5x11 T
C824	CEET-J100M-CI0	CAPACITOR E/ALUMINUM	10uF M 50V 5x11 T
C825	CCAT-J101K-AAB	CAPACITOR CERAMIC	100PF K 50V B T
C826	CCAT-J101K-AAB	CAPACITOR CERAMIC	100PF K 50V B T
C827	CFMT-N152J-CJ0	CAPACITOR F/POLYESTR	0.0015uF J 100V 5.4x12 T
C828	CFMT-N152J-CJ0	CAPACITOR F/POLYESTR	0.0015uF J 100V 5.4x12 T
C829	CFMT-N104J-JK0	CAPACITOR F/POLYESTR	0.10uF J 100V 12.1x14 T
C830	CFMT-N104J-JK0	CAPACITOR F/POLYESTR	0.10uF J 100V 12.1x14 T
C831	CEET-J4R7M-CI0	CAPACITOR E/ALUMINUM	4.7uF M 50V 5x11 T

Ref. No.	Part No.	Description		
C832	CEET-J4R7M-CIO	CAPACITOR E/ALUMINUM	4.7uF M 50V 5x11 T	
C833	CEET-F470M-CIO	CAPACITOR E/ALUMINUM	47uF M 25V 5x11 T	
C834	CEET-F470M-CIO	CAPACITOR E/ALUMINUM	47uF M 25V 5x11 T	
C835	CEET-J100M-CIO	CAPACITOR E/ALUMINUM	10uF M 50V 5x11 T	
C836	CEET-J100M-CIO	CAPACITOR E/ALUMINUM	10uF M 50V 5x11 T	
C837	CCAT-J101K-AAB	CAPACITOR CERAMIC	100PF K 50V B T	
C838	CEET-J4R7M-CIO	CAPACITOR E/ALUMINUM	4.7uF M 50V 5x11 T	
C839	CCTT-J101J-0CZ	CAPACITOR CERAMIC	100PF J 50V SL T	"AVR18 ONLY"
C840	CEET-J100M-CIO	CAPACITOR E/ALUMINUM	10uF M 50V 5x11 T	
C841	CEET-F470M-CIO	CAPACITOR E/ALUMINUM	47uF M 25V 5x11 T	
C842	CCAT-J101K-AAB	CAPACITOR CERAMIC	100PF K 50V B T	
C843	CEET-J4R7M-CIO	CAPACITOR E/ALUMINUM	4.7uF M 50V 5x11 T	
C844	CCTT-J101J-0CZ	CAPACITOR CERAMIC	100PF J 50V SL T	"AVR18 ONLY"
C845	CEET-J100M-CIO	CAPACITOR E/ALUMINUM	10uF M 50V 5x11 T	
C846	CCAT-J101K-AAB	CAPACITOR CERAMIC	100PF K 50V B T	
C847	CEET-J4R7M-CIO	CAPACITOR E/ALUMINUM	4.7uF M 50V 5x11 T	
C848	CCTT-J101J-0CZ	CAPACITOR CERAMIC	100PF J 50V SL T	"AVR18 ONLY"
C849	CEET-J100M-CIO	CAPACITOR E/ALUMINUM	10uF M 50V 5x11 T	
C850	CEET-F470M-CIO	CAPACITOR E/ALUMINUM	47uF M 25V 5x11 T	
C851	CCAT-J101K-AAB	CAPACITOR CERAMIC	100PF K 50V B T	
C852	CEET-J4R7M-CIO	CAPACITOR E/ALUMINUM	4.7uF M 50V 5x11 T	
C853	CCTT-J101J-0CZ	CAPACITOR CERAMIC	100PF J 50V SL T	"AVR18 ONLY"
C854	CEET-J100M-CIO	CAPACITOR E/ALUMINUM	10uF M 50V 5x11 T	
C855	CCAT-J101K-AAB	CAPACITOR CERAMIC	100PF K 50V B T	
C856	CEET-J4R7M-CIO	CAPACITOR E/ALUMINUM	4.7uF M 50V 5x11 T	
C857	CCTT-J101J-0CZ	CAPACITOR CERAMIC	100PF J 50V SL T	"AVR18 ONLY"
C858	CEET-J100M-CIO	CAPACITOR E/ALUMINUM	10uF M 50V 5x11 T	
C859	CEET-F470M-CIO	CAPACITOR E/ALUMINUM	47uF M 25V 5x11 T	
C860	CCAT-J101K-AAB	CAPACITOR CERAMIC	100PF K 50V B T	
C861	CEET-J4R7M-CIO	CAPACITOR E/ALUMINUM	4.7uF M 50V 5x11 T	
C862	CCTT-J101J-0CZ	CAPACITOR CERAMIC	100PF J 50V SL T	"AVR18 ONLY"
C863	CEET-J100M-CIO	CAPACITOR E/ALUMINUM	10uF M 50V 5x11 T	
C864	CEET-F470M-CIO	CAPACITOR E/ALUMINUM	47uF M 25V 5x11 T	
C865	CEET-F470M-CIO	CAPACITOR E/ALUMINUM	47uF M 25V 5x11 T	
C866	CCAT-F103Z-AAF	CAPACITOR CERAMIC	0.01uF Z 25V F T	
C867	CEET-F470M-CIO	CAPACITOR E/ALUMINUM	47uF M 25V 5x11 T	
C868	CEET-F470M-CIO	CAPACITOR E/ALUMINUM	47uF M 25V 5x11 T	
C869	CEET-F470M-CIO	CAPACITOR E/ALUMINUM	47uF M 25V 5x11 T	
C888	CEET-J4R7M-CIO	CAPACITOR E/ALUMINUM	4.7uF M 50V 5x11 T	
C889	CEET-J4R7M-CIO	CAPACITOR E/ALUMINUM	4.7uF M 50V 5x11 T	
C890	CEET-J1R0M-CIO	CAPACITOR E/ALUMINUM	1.0uF M 50V 5x11 T	
C891	CCAT-J104Z-AAF	CAPACITOR CERAMIC	0.1uF Z 50V F T	
C893	CCAT-J101K-AAB	CAPACITOR CERAMIC	100PF K 50V B T	
C894	CCAT-J101K-AAB	CAPACITOR CERAMIC	100PF K 50V B T	
C895	CCAT-J101K-AAB	CAPACITOR CERAMIC	100PF K 50V B T	
C896	CCAT-J101K-AAB	CAPACITOR CERAMIC	100PF K 50V B T	
C897	CCAT-J470J-AAZ	CAPACITOR CERAMIC	47PF J 50V SL T	
C898	CCAT-J470J-AAZ	CAPACITOR CERAMIC	47PF J 50V SL T	
C899	CCAT-J470J-AAZ	CAPACITOR CERAMIC	47PF J 50V SL T	
C900	CCAT-J470J-AAZ	CAPACITOR CERAMIC	47PF J 50V SL T	
C901	CCAT-J101K-AAB	CAPACITOR CERAMIC	100PF K 50V B T	
C902	CCAT-J101K-AAB	CAPACITOR CERAMIC	100PF K 50V B T	
C903	CCAT-J101K-AAB	CAPACITOR CERAMIC	100PF K 50V B T	
C904	CCAT-J101K-AAB	CAPACITOR CERAMIC	100PF K 50V B T	
C905	CCAT-J101K-AAB	CAPACITOR CERAMIC	100PF K 50V B T	
C906	CCAT-J101K-AAB	CAPACITOR CERAMIC	100PF K 50V B T	
C911	CCCT-J104Z-0FF	CAPACITOR CERAMIC	0.1uF Z 50V F T	
C913	CCAT-J101K-AAB	CAPACITOR CERAMIC	100PF K 50V B T	
C914	CCAT-J101K-AAB	CAPACITOR CERAMIC	100PF K 50V B T	
C915	CCAT-J101K-AAB	CAPACITOR CERAMIC	100PF K 50V B T	
C916	CCAT-J101K-AAB	CAPACITOR CERAMIC	100PF K 50V B T	
C917	CCAT-F103Z-AAF	CAPACITOR CERAMIC	0.01uF Z 25V F T	
C918	CCAT-F103Z-AAF	CAPACITOR CERAMIC	0.01uF Z 25V F T	
C919	CCAT-F103Z-AAF	CAPACITOR CERAMIC	0.01uF Z 25V F T	
C920	CCAT-F103Z-AAF	CAPACITOR CERAMIC	0.01uF Z 25V F T	
C921	CCAT-F103Z-AAF	CAPACITOR CERAMIC	0.01uF Z 25V F T	
C922	CCAT-F103Z-AAF	CAPACITOR CERAMIC	0.01uF Z 25V F T	
C924	CEET-J4R7M-CIO	CAPACITOR E/ALUMINUM	4.7uF M 50V 5x11 T	
C925	CEET-J4R7M-CIO	CAPACITOR E/ALUMINUM	4.7uF M 50V 5x11 T	
C926	CEET-F470M-CIO	CAPACITOR E/ALUMINUM	47uF M 25V 5x11 T	
C927	CEET-F470M-CIO	CAPACITOR E/ALUMINUM	47uF M 25V 5x11 T	
C928	CCTT-J101J-0CZ	CAPACITOR CERAMIC	100PF J 50V SL T	"AVR18 ONLY"
C929	CCTT-J101J-0CZ	CAPACITOR CERAMIC	100PF J 50V SL T	"AVR18 ONLY"
C930	CCTT-J101J-0CZ	CAPACITOR CERAMIC	100PF J 50V SL T	"AVR18 ONLY"
C931	CCTT-J101J-0CZ	CAPACITOR CERAMIC	100PF J 50V SL T	"AVR18 ONLY"
C932	CCTT-J101J-0CZ	CAPACITOR CERAMIC	100PF J 50V SL T	"AVR18 ONLY"

Ref. No.	Part No.	Description	
C933	CCTT-J101J-0CZ	CAPACITOR CERAMIC	100PF J 50V SL T "AVR18 ONLY"
		DIODES	
D801	DDTS-00070-SO0	DIODE-SI	1SS133 (40V 0.11A) DO-40 T
		INTEGRATED CIRCUITS	
IC801	ICOP-00134-SG0	IC DUAL OP AMP	NJM4558M SOP8
IC802	ICOP-00134-SG0	IC DUAL OP AMP	NJM4558M SOP8
IC803	ICOP-00134-SG0	IC DUAL OP AMP	NJM4558M SOP8
IC804	ICLN-03590-S10	IC ANALOG FUNCTION	LC78213 DIP30
IC805	ICCM-01300-SD0	IC VOLUME CONTROL IC	KIC9459F SOP24
IC806	ICCM-01300-SD0	IC VOLUME CONTROL IC	KIC9459F SOP24
IC807	ICCM-01300-SD0	IC VOLUME CONTROL IC	KIC9459F SOP24
IC808	ICOP-00134-SG0	IC DUAL OP AMP	NJM4558M SOP8
IC809	ICOP-00134-SG0	IC DUAL OP AMP	NJM4558M SOP8
IC810	ICOP-00134-SG0	IC DUAL OP AMP	NJM4558M SOP8
IC811	ICOP-00134-SG0	IC DUAL OP AMP	NJM4558M SOP8
		CONNECTORS	
CW803	KNCW-00240-8T9	CONNECTOR-WAFER	53014-08 2.0mm WHT
CN801	KNCW-01510-DS9	CONNECTOR-WAFER	35237-1310 2M/M 13P
CN802	KNCW-01510-8S9	CONNECTOR-WAFER	35237-0810 2M/M 8P
CW801	UA08-8O810-250	WIRE-ASS'Y	1533#28 GRY-100 10P
CW805	U308-8S818-250	WIRE-ASS'Y	2547#28 GRY-180 3P
		MISCELLANEOUS	
PCB	PCSR-04830-11B	PCB-PREOUT	A1R-483
JK801	SKRC-00750-060	SOCKET-RCA	JK060046BN
JK802	SKRC-00750-060	SOCKET-RCA	JK060046BN
		RESISTORS	
R801	RCFT-E104J-000	RESISTOR-CARBON FILM	100Kohm 1/5W J T
R802	RCFT-E104J-000	RESISTOR-CARBON FILM	100Kohm 1/5W J T
R803	RCFT-E102J-000	RESISTOR-CARBON FILM	1Kohm 1/5W J T
R804	RCFT-E104J-000	RESISTOR-CARBON FILM	100Kohm 1/5W J T
R805	RCFT-E102J-000	RESISTOR-CARBON FILM	1Kohm 1/5W J T
R806	RCFT-E104J-000	RESISTOR-CARBON FILM	100Kohm 1/5W J T
R807	RCFT-E470J-000	RESISTOR-CARBON FILM	47ohm 1/5W J T
R808	RCFT-E470J-000	RESISTOR-CARBON FILM	47ohm 1/5W J T
R809	RCFT-E470J-000	RESISTOR-CARBON FILM	47ohm 1/5W J T
R810	RCFT-E470J-000	RESISTOR-CARBON FILM	47ohm 1/5W J T
R811	RCFT-E104J-000	RESISTOR-CARBON FILM	100Kohm 1/5W J T
R812	RCFT-E104J-000	RESISTOR-CARBON FILM	100Kohm 1/5W J T
R813	RCFT-E104J-000	RESISTOR-CARBON FILM	100Kohm 1/5W J T
R814	RCFT-E104J-000	RESISTOR-CARBON FILM	100Kohm 1/5W J T
R815	RCFT-E102J-000	RESISTOR-CARBON FILM	1Kohm 1/5W J T
R816	RCFT-E104J-000	RESISTOR-CARBON FILM	100Kohm 1/5W J T
R817	RCFT-E102J-000	RESISTOR-CARBON FILM	1Kohm 1/5W J T
R818	RCFT-E104J-000	RESISTOR-CARBON FILM	100Kohm 1/5W J T
R819	RCFT-E470J-000	RESISTOR-CARBON FILM	47ohm 1/5W J T
R820	RCFT-E470J-000	RESISTOR-CARBON FILM	47ohm 1/5W J T
R821	RCFT-E470J-000	RESISTOR-CARBON FILM	47ohm 1/5W J T
R822	RCFT-E470J-000	RESISTOR-CARBON FILM	47ohm 1/5W J T
R823	RCFT-E104J-000	RESISTOR-CARBON FILM	100Kohm 1/5W J T
R824	RCFT-E104J-000	RESISTOR-CARBON FILM	100Kohm 1/5W J T
R825	RCFT-E104J-000	RESISTOR-CARBON FILM	100Kohm 1/5W J T
R826	RCFT-E104J-000	RESISTOR-CARBON FILM	100Kohm 1/5W J T
R827	RCFT-E102J-000	RESISTOR-CARBON FILM	1Kohm 1/5W J T
R828	RCFT-E104J-000	RESISTOR-CARBON FILM	100Kohm 1/5W J T
R829	RCFT-E102J-000	RESISTOR-CARBON FILM	1Kohm 1/5W J T
R830	RCFT-E104J-000	RESISTOR-CARBON FILM	100Kohm 1/5W J T
R831	RCFT-E470J-000	RESISTOR-CARBON FILM	47ohm 1/5W J T
R832	RCFT-E470J-000	RESISTOR-CARBON FILM	47ohm 1/5W J T
R833	RCFT-E470J-000	RESISTOR-CARBON FILM	47ohm 1/5W J T
R834	RCFT-E470J-000	RESISTOR-CARBON FILM	47ohm 1/5W J T
R835	RCFT-E104J-000	RESISTOR-CARBON FILM	100Kohm 1/5W J T
R836	RCFT-E104J-000	RESISTOR-CARBON FILM	100Kohm 1/5W J T
R837	RCFT-E104J-000	RESISTOR-CARBON FILM	100Kohm 1/5W J T
R838	RCFT-E102J-000	RESISTOR-CARBON FILM	1Kohm 1/5W J T
R839	RCFT-E104J-000	RESISTOR-CARBON FILM	100Kohm 1/5W J T
R840	RCFT-E470J-000	RESISTOR-CARBON FILM	47ohm 1/5W J T

Ref. No.	Part No.	Description	
R841	RCFT-E470J-000	RESISTOR-CARBON FILM	47ohm 1/5W J T
R842	RCFT-E104J-000	RESISTOR-CARBON FILM	100Kohm 1/5W J T
R843	RCFT-E102J-000	RESISTOR-CARBON FILM	1Kohm 1/5W J T
R844	RCFT-E104J-000	RESISTOR-CARBON FILM	100Kohm 1/5W J T
R845	RCFT-E104J-000	RESISTOR-CARBON FILM	100Kohm 1/5W J T
R846	RCFT-E102J-000	RESISTOR-CARBON FILM	1Kohm 1/5W J T
R847	RCFT-E104J-000	RESISTOR-CARBON FILM	100Kohm 1/5W J T
R848	RCFT-E470J-000	RESISTOR-CARBON FILM	47ohm 1/5W J T
R849	RCFT-E470J-000	RESISTOR-CARBON FILM	47ohm 1/5W J T
R850	RCFT-E104J-000	RESISTOR-CARBON FILM	100Kohm 1/5W J T
R851	RCFT-E102J-000	RESISTOR-CARBON FILM	1Kohm 1/5W J T
R852	RCFT-E104J-000	RESISTOR-CARBON FILM	100Kohm 1/5W J T
R853	RCFT-E104J-000	RESISTOR-CARBON FILM	100Kohm 1/5W J T
R854	RCFT-E102J-000	RESISTOR-CARBON FILM	1Kohm 1/5W J T
R855	RCFT-E104J-000	RESISTOR-CARBON FILM	100Kohm 1/5W J T
R856	RCFT-E470J-000	RESISTOR-CARBON FILM	47ohm 1/5W J T
R857	RCFT-E470J-000	RESISTOR-CARBON FILM	47ohm 1/5W J T
R858	RCFT-E104J-000	RESISTOR-CARBON FILM	100Kohm 1/5W J T
R859	RCFT-E102J-000	RESISTOR-CARBON FILM	1Kohm 1/5W J T
R860	RCFT-E104J-000	RESISTOR-CARBON FILM	100Kohm 1/5W J T
R861	RCFT-E104J-000	RESISTOR-CARBON FILM	100Kohm 1/5W J T
R862	RCFT-E471J-000	RESISTOR-CARBON FILM	470ohm 1/5W J T
R863	RCFT-E102J-000	RESISTOR-CARBON FILM	1Kohm 1/5W J T
R864	RCFT-E102J-000	RESISTOR-CARBON FILM	1Kohm 1/5W J T
R865	RCFT-E102J-000	RESISTOR-CARBON FILM	1Kohm 1/5W J T
R866	RCFT-E471J-000	RESISTOR-CARBON FILM	470ohm 1/5W J T
R867	RCFT-E222J-000	RESISTOR-CARBON FILM	2.2Kohm 1/5W J T
R868	RCFT-E222J-000	RESISTOR-CARBON FILM	2.2Kohm 1/5W J T
R869	RCFT-E153J-000	RESISTOR-CARBON FILM	15Kohm 1/5W J T
R870	RCFT-E222J-000	RESISTOR-CARBON FILM	2.2Kohm 1/5W J T
R871	RCFT-E222J-000	RESISTOR-CARBON FILM	2.2Kohm 1/5W J T
R872	RCFT-E153J-000	RESISTOR-CARBON FILM	15Kohm 1/5W J T
R873	RCFT-E222J-000	RESISTOR-CARBON FILM	2.2Kohm 1/5W J T
R874	RCFT-E222J-000	RESISTOR-CARBON FILM	2.2Kohm 1/5W J T
R875	RCFT-E153J-000	RESISTOR-CARBON FILM	15Kohm 1/5W J T
R876	RCFT-E221J-000	RESISTOR-CARBON FILM	220ohm 1/5W J T
R877	RCFT-E221J-000	RESISTOR-CARBON FILM	220ohm 1/5W J T
R878	RCFT-E221J-000	RESISTOR-CARBON FILM	220ohm 1/5W J T
R879	RCFT-E221J-000	RESISTOR-CARBON FILM	220ohm 1/5W J T
R880	RCFT-E221J-000	RESISTOR-CARBON FILM	220ohm 1/5W J T
R881	RCFT-E221J-000	RESISTOR-CARBON FILM	220ohm 1/5W J T
R882	RCFT-E153J-000	RESISTOR-CARBON FILM	15Kohm 1/5W J T
R883	RCFT-E153J-000	RESISTOR-CARBON FILM	15Kohm 1/5W J T
R884	RCFT-E302J-000	RESISTOR-CARBON FILM	3Kohm 1/5W J T
R885	RCFT-E153J-000	RESISTOR-CARBON FILM	15Kohm 1/5W J T
R886	RCFT-E302J-000	RESISTOR-CARBON FILM	3Kohm 1/5W J T
R887	RCFT-E153J-000	RESISTOR-CARBON FILM	15Kohm 1/5W J T
R888	RCFT-E302J-000	RESISTOR-CARBON FILM	3Kohm 1/5W J T
R889	RCFT-E153J-000	RESISTOR-CARBON FILM	15Kohm 1/5W J T
R890	RCFT-E302J-000	RESISTOR-CARBON FILM	3Kohm 1/5W J T
R891	RCFT-E102J-000	RESISTOR-CARBON FILM	1Kohm 1/5W J T
R892	RCFT-E102J-000	RESISTOR-CARBON FILM	1Kohm 1/5W J T
R893	RCFT-E102J-000	RESISTOR-CARBON FILM	1Kohm 1/5W J T
R894	RCFT-E102J-000	RESISTOR-CARBON FILM	1Kohm 1/5W J T
R895	RCFT-E102J-000	RESISTOR-CARBON FILM	1Kohm 1/5W J T
R896	RCFT-E102J-000	RESISTOR-CARBON FILM	1Kohm 1/5W J T
R897	RCFT-E152J-000	RESISTOR-CARBON FILM	1.5Kohm 1/5W J T
R898	RCFT-E152J-000	RESISTOR-CARBON FILM	1.5Kohm 1/5W J T
R899	RCFT-E152J-000	RESISTOR-CARBON FILM	1.5Kohm 1/5W J T
R900	RCFT-E152J-000	RESISTOR-CARBON FILM	1.5Kohm 1/5W J T
R901	RCFT-E102J-000	RESISTOR-CARBON FILM	1Kohm 1/5W J T
R902	RCFT-E102J-000	RESISTOR-CARBON FILM	1Kohm 1/5W J T
R903	RCFT-E102J-000	RESISTOR-CARBON FILM	1Kohm 1/5W J T
R904	RCFT-E102J-000	RESISTOR-CARBON FILM	1Kohm 1/5W J T
R905	RCFT-E102J-000	RESISTOR-CARBON FILM	1Kohm 1/5W J T
R906	RCFT-E102J-000	RESISTOR-CARBON FILM	1Kohm 1/5W J T
R907	RCFT-E102J-000	RESISTOR-CARBON FILM	1Kohm 1/5W J T
R908	RCFT-E102J-000	RESISTOR-CARBON FILM	1Kohm 1/5W J T
R909	RCFT-E102J-000	RESISTOR-CARBON FILM	1Kohm 1/5W J T
R910	RCFT-E104J-000	RESISTOR-CARBON FILM	100Kohm 1/5W J T
R911	RCFT-E104J-000	RESISTOR-CARBON FILM	100Kohm 1/5W J T
R912	RCFT-E102J-000	RESISTOR-CARBON FILM	1Kohm 1/5W J T
R913	RCFT-E102J-000	RESISTOR-CARBON FILM	1Kohm 1/5W J T
R914	RCFT-E470J-000	RESISTOR-CARBON FILM	47ohm 1/5W J T
R915	RCFT-E470J-000	RESISTOR-CARBON FILM	47ohm 1/5W J T
R918	RCFT-E104J-000	RESISTOR-CARBON FILM	100Kohm 1/5W J T

Ref. No.	Part No.	Description		
		TRANSISTORS		
Q801	TRTD-00200-SD0	TRANSISTOR N-L FREQ	KTD-1302	TO92
Q802	TRTD-00200-SD0	TRANSISTOR N-L FREQ	KTD-1302	TO92
Q803	TRTA-00940-SD0	TRANSISTOR P-H FREQ	KRA107M	W/RESIST TO92M
Q804	TRTD-00200-SD0	TRANSISTOR N-L FREQ	KTD-1302	TO92
Q805	TRTD-00200-SD0	TRANSISTOR N-L FREQ	KTD-1302	TO92
Q806	TRTA-00940-SD0	TRANSISTOR P-H FREQ	KRA107M	W/RESIST TO92M
Q807	TRTD-00200-SD0	TRANSISTOR N-L FREQ	KTD-1302	TO92
Q808	TRTD-00200-SD0	TRANSISTOR N-L FREQ	KTD-1302	TO92
Q809	TRTA-00940-SD0	TRANSISTOR P-H FREQ	KRA107M	W/RESIST TO92M
Q810	TRTA-00940-SD0	TRANSISTOR P-H FREQ	KRA107M	W/RESIST TO92M
Q811	TRTC-01700-SD0	TRANSISTOR N-H FREQ	KRC107M	W/RESIST TO92M
Q812	TRTC-01700-SD0	TRANSISTOR N-H FREQ	KRC107M	W/RESIST TO92M
Q813	TRTC-01700-SD0	TRANSISTOR N-H FREQ	KRC107M	W/RESIST TO92M
Q814	TRTC-01700-SD0	TRANSISTOR N-H FREQ	KRC107M	W/RESIST TO92M

4. FRONT P.C.BOARD

		DIODES		
D701	DDTS-00070-SO0	DIODE-SI	1SS133 (40V 0.11A) DO-40 T	
D702	DDTS-00070-SO0	DIODE-SI	1SS133 (40V 0.11A) DO-40 T	
D703	DDTS-00070-SO0	DIODE-SI	1SS133 (40V 0.11A) DO-40 T	
D704	DDTS-00070-SO0	DIODE-SI	1SS133 (40V 0.11A) DO-40 T	
D705	DDTS-00070-SO0	DIODE-SI	1SS133 (40V 0.11A) DO-40 T	
D706	DDTS-00070-SO0	DIODE-SI	1SS133 (40V 0.11A) DO-40 T	
D707	DDTS-00070-SO0	DIODE-SI	1SS133 (40V 0.11A) DO-40 T	
D708	DDTS-00070-SO0	DIODE-SI	1SS133 (40V 0.11A) DO-40 T	
D709	DDTS-00070-SO0	DIODE-SI	1SS133 (40V 0.11A) DO-40 T	
D710	DDTS-00070-SO0	DIODE-SI	1SS133 (40V 0.11A) DO-40 T	
D711	DDTS-00070-SO0	DIODE-SI	1SS133 (40V 0.11A) DO-40 T	
D712	DDTZ-G075B-SO0	DIODE ZENER	MTZ7.5B 7.07-7.45 D040 T	
D714	DDTS-00070-SO0	DIODE-SI	1SS133 (40V 0.11A) DO-40 T	
D715	DDTS-00070-SO0	DIODE-SI	1SS133 (40V 0.11A) DO-40 T	
D716	DDTS-00070-SO0	DIODE-SI	1SS133 (40V 0.11A) DO-40 T	
LD705	DPLE-00201-RR0	DISPLAY-LED	SR3511 RED 5mm TAPPING	
LD706	DPLE-00201-RR0	DISPLAY-LED	SR3511 RED 5mm TAPPING	
		RESISTORS		
R701	RCFT-E472J-000	RESISTOR-CARBON FILM	4.7Kohm 1/5W J T	
R702	RCFT-E472J-000	RESISTOR-CARBON FILM	4.7Kohm 1/5W J T	
R703	RCFT-E472J-000	RESISTOR-CARBON FILM	4.7Kohm 1/5W J T	
R704	RCFT-E472J-000	RESISTOR-CARBON FILM	4.7Kohm 1/5W J T	
R705	RCFT-E223J-000	RESISTOR-CARBON FILM	22Kohm 1/5W J T	
R706	RCFT-E104J-000	RESISTOR-CARBON FILM	100Kohm 1/5W J T	
R712	RCFT-E271J-000	RESISTOR-CARBON FILM	270ohm 1/5W J T	
R713	RCFT-E271J-000	RESISTOR-CARBON FILM	270ohm 1/5W J T	
R716	RCFT-E271J-000	RESISTOR-CARBON FILM	270ohm 1/5W J T	
R717	RCFT-E271J-000	RESISTOR-CARBON FILM	270ohm 1/5W J T	
R719	RCFT-E331J-000	RESISTOR-CARBON FILM	330ohm 1/5W J T	
R720	RCFT-F272J-010	RESISTOR-CARBON FILM	2.7Kohm 1/4W J T	
R721	RCFT-F272J-010	RESISTOR-CARBON FILM	2.7Kohm 1/4W J T	
R722	RCFT-F272J-010	RESISTOR-CARBON FILM	2.7Kohm 1/4W J T	
R723	RCFT-F272J-010	RESISTOR-CARBON FILM	2.7Kohm 1/4W J T	
R725	RCFT-F272J-010	RESISTOR-CARBON FILM	2.7Kohm 1/4W J T	
R726	RCFT-F272J-010	RESISTOR-CARBON FILM	2.7Kohm 1/4W J T	
R727	RCFT-F272J-010	RESISTOR-CARBON FILM	2.7Kohm 1/4W J T	
R728	RCFT-F272J-010	RESISTOR-CARBON FILM	2.7Kohm 1/4W J T	
R729	RCFT-F272J-010	RESISTOR-CARBON FILM	2.7Kohm 1/4W J T	
R730	RCFT-F272J-010	RESISTOR-CARBON FILM	2.7Kohm 1/4W J T	
R731	RCFT-F272J-010	RESISTOR-CARBON FILM	2.7Kohm 1/4W J T	
R732	RCFT-F272J-010	RESISTOR-CARBON FILM	2.7Kohm 1/4W J T	
R733	RCFT-F272J-010	RESISTOR-CARBON FILM	2.7Kohm 1/4W J T	
R734	RCFT-F272J-010	RESISTOR-CARBON FILM	2.7Kohm 1/4W J T	
R735	RCFT-F272J-010	RESISTOR-CARBON FILM	2.7Kohm 1/4W J T	
R736	RCFT-F272J-010	RESISTOR-CARBON FILM	2.7Kohm 1/4W J T	
R737	RCFT-F272J-010	RESISTOR-CARBON FILM	2.7Kohm 1/4W J T	"AVR 18 ONLY"
R739	RCFT-E473J-000	RESISTOR-CARBON FILM	47Kohm 1/5W J T	
R740	RCFT-E473J-000	RESISTOR-CARBON FILM	47Kohm 1/5W J T	"AVR 5 ONLY"
R746	RCFT-E223J-000	RESISTOR-CARBON FILM	22Kohm 1/5W J T	
R747	RCFT-E223J-000	RESISTOR-CARBON FILM	22Kohm 1/5W J T	
R748	RCFT-E223J-000	RESISTOR-CARBON FILM	22Kohm 1/5W J T	
R751	RCFT-F223J-010	RESISTOR-CARBON FILM	22Kohm 1/4W J T	
R752	RCFT-F223J-010	RESISTOR-CARBON FILM	22Kohm 1/4W J T	

Ref. No.	Part No.	Description	
R753	RCFT-F223J-010	RESISTOR-CARBON FILM	22Kohm 1/4W J T
R754	RCFT-E473J-000	RESISTOR-CARBON FILM	47Kohm 1/5W J T "AVR 5 ONLY"
R755	RCFT-E103J-000	RESISTOR-CARBON FILM	10Kohm 1/5W J T
R756	RCFT-E103J-000	RESISTOR-CARBON FILM	10Kohm 1/5W J T "AVR 18 ONLY"
		INTEGRATED CIRCUITS	
IC701	ICMP-03100-S20	IC MICOM	UPD780204GF-049-3BA QFP100
IC702	ICOP-00210-SD0	IC RESET	KIA7042P/F 4.2V TO-92
IC703	ICHY-00221-U60	IC REMOTE RECEIVER	TSOP1238TB1
IC704	ICCM-00231-SR0	IC 2K CMOS EEPROM	M24C02-BN6 DIP8
		MISCELLANEOUS	
X701	KTRE-00170-042	RESONATOR	CST4.19MGW 4.19MHz
	MRAG-13020-004	CUSHION-A	EVA(VE-45),10X25X6T
FL701	DPFL-00630-00P	DISPLAY-FLUORESCENT	CM1530C
PCB	PCSR-04810-11B	PCB-FRONT	A1R-481A
SW703	SWTA-00220-060	SWITCH-TACT	SKHV10910(A) 12V 50mA
SW705	SWTA-00220-060	SWITCH-TACT	SKHV10910(A) 12V 50mA
SW706	SWTA-00220-060	SWITCH-TACT	SKHV10910(A) 12V 50mA
SW707	SWTA-00220-060	SWITCH-TACT	SKHV10910(A) 12V 50mA
SW708	SWTA-00220-060	SWITCH-TACT	SKHV10910(A) 12V 50mA
SW709	SWTA-00220-060	SWITCH-TACT	SKHV10910(A) 12V 50mA
SW710	SWTA-00220-060	SWITCH-TACT	SKHV10910(A) 12V 50mA
SW711	SWTA-00220-060	SWITCH-TACT	SKHV10910(A) 12V 50mA
SW712	SWTA-00220-060	SWITCH-TACT	SKHV10910(A) 12V 50mA
SW713	SWTA-00220-060	SWITCH-TACT	SKHV10910(A) 12V 50mA
SW714	SWTA-00220-060	SWITCH-TACT	SKHV10910(A) 12V 50mA
SW715	SWTA-00220-060	SWITCH-TACT	SKHV10910(A) 12V 50mA
SW716	SWTA-00220-060	SWITCH-TACT	SKHV10910(A) 12V 50mA
SW717	SWTA-00220-060	SWITCH-TACT	SKHV10910(A) 12V 50mA
SW718	SWTA-00220-060	SWITCH-TACT	SKHV10910(A) 12V 50mA
SW719	SWTA-00220-060	SWITCH-TACT	SKHV10910(A) 12V 50mA
SW720	SWTA-00220-060	SWITCH-TACT	SKHV10910(A) 12V 50mA
SW721	SWTA-00220-060	SWITCH-TACT	SKHV10910(A) 12V 50mA
SW722	SWTA-00220-060	SWITCH-TACT	SKHV10910(A) 12V 50mA
SW723	SWTA-00220-060	SWITCH-TACT	SKHV10910(A) 12V 50mA
SW724	SWTA-00220-060	SWITCH-TACT	SKHV10910(A) 12V 50mA
SW725	SWTA-00220-060	SWITCH-TACT	SKHV10910(A) 12V 50mA
SW727	SWTA-00220-060	SWITCH-TACT	SKHV10910(A) 12V 50mA
SW728	SWTA-00220-060	SWITCH-TACT	SKHV10910(A) 12V 50mA
SW729	SWTA-00220-060	SWITCH-TACT	SKHV10910(A) 12V 50mA
SW730	SWTA-00220-060	SWITCH-TACT	SKHV10910(A) 12V 50mA
SW731	SWTA-00220-060	SWITCH-TACT	SKHV10910(A) 12V 50mA
SW732	SWTA-00220-060	SWITCH-TACT	SKHV10910(A) 12V 50mA
		TRANSISTORS	
Q704	TRTC-01700-SD0	TRANSISTOR N-H FREQ	KRC107M W/RESIST TO92M
Q705	TRTC-01700-SD0	TRANSISTOR N-H FREQ	KRC107M W/RESIST TO92M
Q706	TRTC-01700-SD0	TRANSISTOR N-H FREQ	KRC107M W/RESIST TO92M
Q707	TRTC-01700-SD0	TRANSISTOR N-H FREQ	KRC107M W/RESIST TO92M
Q708	TRTC-01700-SD0	TRANSISTOR N-H FREQ	KRC107M W/RESIST TO92M
Q710	TRTC-0016G-SD0	TRANSISTOR N-H FREQ	KTC3198-GR TO92
		CONNECTORS	
CW701	U810-7M744-200	WIRE-ASS'Y	UL1007#26 VIT-440 8P
CW702	U308-8S810-250	WIRE-ASS'Y	2547#28 GRY-100 10P
CW704	U508-4M710-250	WIRE-ASS'Y	1007#26 YEL-100 5P
CN701	KNCW-06380-35S	CONNECTOR-WAFER	GF120-35S-TS 1.25mm S
CN702	KNCW-00160-5S9	CONNECTOR-WAFER	53015-0510 2mm-WHT
		CAPACITORS	
C703	CCCT-J103Z-0DF	CAPACITOR CERAMIC	0.01uF Z 50V F T
C704	CCAT-J104Z-AAF	CAPACITOR CERAMIC	0.1uF Z 50V F T
C705	CEET-J100M-CI0	CAPACITOR E/ALUMINUM	10uF M 50V 5x11 T
C706	CEGS-B104Z-BK0	CAPACITOR E/DO LAYER	0.1F Z 5.5V EECS5R5V104
C707	CEET-D101M-CI0	CAPACITOR E/ALUMINUM	100uF M 10V 5x11 T
C708	CEET-F470M-CI0	CAPACITOR E/ALUMINUM	47uF M 25V 5x11 T
C709	CCAT-J104Z-AAF	CAPACITOR CERAMIC	0.1uF Z 50V F T
C710	CCTT-J101J-0CZ	CAPACITOR CERAMIC	100PF J 50V SL T

Ref. No.	Part No.	Description	
C711	CCAT-J473Z-AAF	CAPACITOR CERAMIC	0.047uF Z 50V F T
C712	CCAT-J473Z-AAF	CAPACITOR CERAMIC	0.047uF Z 50V F T
C713	CEET-J470M-DI0	CAPACITOR E/ALUMINUM	47uF M 50V 6.3x11 T
C714	CCAT-J104Z-AAF	CAPACITOR CERAMIC	0.1uF Z 50V F T
C715	CEET-J1R0M-CI0	CAPACITOR E/ALUMINUM	1.0uF M 50V 5x11 T
C716	CCAT-J104Z-AAF	CAPACITOR CERAMIC	0.1uF Z 50V F T
C752	CCAT-J104Z-AAF	CAPACITOR CERAMIC	0.1uF Z 50V F T
C760	CCAT-J104Z-AAF	CAPACITOR CERAMIC	0.1uF Z 50V F T
C761	CCAT-J104Z-AAF	CAPACITOR CERAMIC	0.1uF Z 50V F T
C762	CCAT-F223Z-AAF	CAPACITOR CERAMIC	0.022uF Z 25V F T

4-1. TUNER P.C.BOARD

		CAPACITORS	
C601	CEET-F470M-CI0	CAPACITOR E/ALUMINUM	47uF M 25V 5x11 T
C602	CCCT-J223Z-0FF	CAPACITOR CERAMIC	0.022uF Z 50V F T
C604	CCCT-J223Z-0FF	CAPACITOR CERAMIC	0.022uF Z 50V F T
C605	CEET-F470M-CI0	CAPACITOR E/ALUMINUM	47uF M 25V 5x11 T
C606	CCCT-J223Z-0FF	CAPACITOR CERAMIC	0.022uF Z 50V F T
C607	CCCT-J223Z-0FF	CAPACITOR CERAMIC	0.022uF Z 50V F T
C608	CCAT-J101K-AAB	CAPACITOR CERAMIC	100PF K 50V B T
C609	CCAT-J101K-AAB	CAPACITOR CERAMIC	100PF K 50V B T
C611	CCCT-J473Z-0JF	CAPACITOR CERAMIC	0.047uF Z 50V F T
C613	CCTT-J150J-0BC	CAPACITOR CERAMIC	15PF J 50V CH T
C614	CFST-O471J-CJ0	CAPACITOR F/STYROL	470PF J 125V 5.5x12 T
C615	CEET-G100M-CI0	CAPACITOR E/ALUMINUM	10uF M 35V 5x11 T
C616	CCCT-J223Z-0FF	CAPACITOR CERAMIC	0.022uF Z 50V F T
C617	CCCT-J223Z-0FF	CAPACITOR CERAMIC	0.022uF Z 50V F T
C618	CEET-J4R7M-CI0	CAPACITOR E/ALUMINUM	4.7uF M 50V 5x11 T
C619	CEET-J4R7M-CI0	CAPACITOR E/ALUMINUM	4.7uF M 50V 5x11 T
C620	CCCT-J223Z-0FF	CAPACITOR CERAMIC	0.022uF Z 50V F T
C621	CFMT-N223J-EK0	CAPACITOR F/POLYESTR	0.022uF J 100V 7.4x13 T
C622	CEET-J3R3M-CI0	CAPACITOR E/ALUMINUM	3.3uF M 50V 5x11 T
C623	CFMT-N332J-DJ0	CAPACITOR F/POLYESTR	0.0033uF J 100V 5.8x12 T
C624	CFMT-N393J-FK0	CAPACITOR F/POLYESTR	0.039uF J 100V 8.5x13. T
C625	CCCT-J103Z-0DF	CAPACITOR CERAMIC	0.01uF Z 50V F T
C626	CEET-J1R0M-CI0	CAPACITOR E/ALUMINUM	1.0uF M 50V 5x11 T
C627	CCCT-J223Z-0FF	CAPACITOR CERAMIC	0.022uF Z 50V F T
C628	CCCT-J223Z-0FF	CAPACITOR CERAMIC	0.022uF Z 50V F T
C629	CEET-F470M-CI0	CAPACITOR E/ALUMINUM	47uF M 25V 5x11 T
C630	CCCT-J473Z-0JF	CAPACITOR CERAMIC	0.047uF Z 50V F T
C631	CCTT-J331J-0FZ	CAPACITOR CERAMIC	330PF J 50V SL T
C632	CCTT-J101J-0CZ	CAPACITOR CERAMIC	100PF J 50V SL T "AVR 18 ONLY"
C633	CCTT-J820J-0BZ	CAPACITOR CERAMIC	82PF J 50V SL T "AVR 18 ONLY"
C634	CCCT-J223Z-0FF	CAPACITOR CERAMIC	0.022uF Z 50V F T
C635	CCCT-J103Z-0DF	CAPACITOR CERAMIC	0.01uF Z 50V F T
C636	CCCT-J223Z-0FF	CAPACITOR CERAMIC	0.022uF Z 50V F T
C637	CCTT-J390J-0DC	CAPACITOR CERAMIC	39PF J 50V CH T
C638	CEET-F470M-CI0	CAPACITOR E/ALUMINUM	47uF M 25V 5x11 T
C639	CCTT-J390J-0DC	CAPACITOR CERAMIC	39PF J 50V CH T
C640	CEET-JR47M-CI0	CAPACITOR E/ALUMINUM	0.47uF M 50V 5x11 T
C642	CEET-F470M-CI0	CAPACITOR E/ALUMINUM	47uF M 25V 5x11 T
C643	CCCT-J223Z-0FF	CAPACITOR CERAMIC	0.022uF Z 50V F T
C644	CCAT-J101K-AAB	CAPACITOR CERAMIC	100PF K 50V B T
C645	CCAT-J101K-AAB	CAPACITOR CERAMIC	100PF K 50V B T
C646	CCAT-J101K-AAB	CAPACITOR CERAMIC	100PF K 50V B T
C647	CCAT-J101K-AAB	CAPACITOR CERAMIC	100PF K 50V B T
C649	CEET-G100M-CI0	CAPACITOR E/ALUMINUM	10uF M 35V 5x11 T
C650	CEET-G100M-CI0	CAPACITOR E/ALUMINUM	10uF M 35V 5x11 T
C651	CEET-G100M-CI0	CAPACITOR E/ALUMINUM	10uF M 35V 5x11 T
C652	CCAT-J680J-AAZ	CAPACITOR CERAMIC	68PF J 50V SL T "AVR 5 ONLY"
C652	CCAT-J100J-AAZ	CAPACITOR CERAMIC	10PF J 50V SL T "AVR 18 ONLY"
C653	CCAT-J680J-AAZ	CAPACITOR CERAMIC	68PF J 50V SL T "AVR 5 ONLY"
C653	CCAT-J100J-AAZ	CAPACITOR CERAMIC	10PF J 50V SL T "AVR 18 ONLY"
C654	CCAT-J561K-AAB	CAPACITOR CERAMIC	560PF K 50V B T "AVR 5 ONLY"
C654	CCAT-J221K-AAB	CAPACITOR CERAMIC	220PF K 50V B T "AVR 18 ONLY"
C655	CCAT-J561K-AAB	CAPACITOR CERAMIC	560PF K 50V B T "AVR 5 ONLY"
C655	CCAT-J221K-AAB	CAPACITOR CERAMIC	220PF K 50V B T "AVR 18 ONLY"
C656	CEET-G100M-CI0	CAPACITOR E/ALUMINUM	10uF M 35V 5x11 T
C657	CCTT-J681J-0BZ	CAPACITOR CERAMIC	680PF J 50V SL T
C658	CEET-J4R7M-CI0	CAPACITOR E/ALUMINUM	4.7uF M 50V 5x11 T
C659	CEET-G100M-CI0	CAPACITOR E/ALUMINUM	10uF M 35V 5x11 T
C660	CCAT-J473Z-AAF	CAPACITOR CERAMIC	0.047uF Z 50V F T
C661	CEET-E101M-DI0	CAPACITOR E/ALUMINUM	100uF M 16V 6.3x11 T
C662	CEET-J1R0M-CI0	CAPACITOR E/ALUMINUM	1.0uF M 50V 5x11 T

Ref. No.	Part No.	Description	
C663	CEET-JR22M-CI0	CAPACITOR E/ALUMINUM	0.22uF M 50V 5x11 T
C664	CEET-J1R0M-CI0	CAPACITOR E/ALUMINUM	1.0uF M 50V 5x11 T
C665	CCCT-J223Z-0FF	CAPACITOR CERAMIC	0.022uF Z 50V F T
C675	CCAT-J104Z-AAF	CAPACITOR CERAMIC	0.1uF Z 50V F T
C676	CCAT-J104Z-AAF	CAPACITOR CERAMIC	0.1uF Z 50V F T
C677	CCAT-J104Z-AAF	CAPACITOR CERAMIC	0.1uF Z 50V F T
		DIODES	
VD601	DDSV-00120-S10	DIODE-VVC	SVC321SPA-C2 AM8V DO40S
VD602	DDSV-00120-S10	DIODE-VVC	SVC321SPA-C2 AM8V DO40S
D602	DDTS-00070-SO0	DIODE-SI	1SS133 (40V 0.11A) DO-40 T
ZD601	DDTZ-G051B-SOS	DIODE ZENER	MTZJ5.1B 4.94-5.20 DO34 T
		INTEGRATED CIRCUITS	
IC601	ICLN-03620-S10	IC AM/FM IF	LA1266 DIP24
IC602	ICLN-03680-S10	IC PLL	LC7218JM SOP-24
IC603	ICLN-03610-S10	IC PLL FM MPX	LA3401 DIP22
IC604	ICLN-03630-SR0	IC RDS DEMODULATOR	TDA7479D SOP16 "AVR 18 ONLY"
		COILS	
T601	KIAT-00530-E20	COIL-AM ANT	AAT053 MW 7mm - CAN
T602	KIAO-00460-E20	COIL-AM OSC	AAO046 MW 7mm - CAN
T603	KIAA-00260-E20	COIL-AM IFT	AAA-026 7MC-K502713N4-KR
T604	IFFA-00110-E20	IFT-FM	AFA011 7mm-CAN
T605	IFFD-00100-E20	IFT-FM DET	AFD010 7mm-CAN
T606	KIML-A0010-E20	COIL-FM MPX FILTER	AMA001 19KHz 10mm-CAN
T607	KIML-A0010-E20	COIL-FM MPX FILTER	AMA001 19KHz 10mm-CAN
L602	KIFK-00080-E20	COIL-FM CHOKE	AFK016 A187LY-K5006 20.8mH "AVR 18 ONLY"
		MISCELLANEOUS	
X601	KTAL-00041-072	CRYSTAL	HC-49/U 7.200000MHz
CF605	KTRE-00300-288	RESONATOR	ZTB456F11
PCB1	PCSR-04810-11B	PCB-TUNER	A1R-481B
CF601	BTBP-00140-BPM	FILTER-MICA PRINT	GFMB-T "AVR 18 ONLY"
CF602	BTCE-00040-107	FILTER-CERAMIC	SFE10.7MS2-A-TF21 "AVR 5 ONLY"
CF602	BTCE-00152-107	FILTER-CERAMIC	SFE10.7MJA10H-A-TF21 "AVR 18 ONLY
CF603	BTCE-00040-107	FILTER-CERAMIC	SFE10.7MS2-A-TF21
CF604	BTCE-00450-045	FILTER-CERAMIC	AHCFM2-450AL
ANT601	TEAT-00170-02S	TERMINAL ANTENNA	SC0210393N "AVR 5 ONLY"
ANT601	TEAT-00160-02S	TERMINAL ANTENNA	SC0210392N "AVR 18 ONLY"
FE601	TUFF-00231-00K	FRONT-END	FTA3-509H "AVR 5 ONLY"
FE601	TUFF-00201-01K	FRONT-END	FTA4-460H "AVR 18 ONLY"
		RESISTORS	
R273	RCFT-E332J-000	RESISTOR-CARBON FILM	3.3Kohm 1/5W J T
R601	RCFT-E102J-000	RESISTOR-CARBON FILM	1Kohm 1/5W J T
R602	RCFT-E243J-000	RESISTOR-CARBON FILM	24Kohm 1/5W J T "AVR 18 ONLY"
R603	RCFT-E104J-000	RESISTOR-CARBON FILM	100Kohm 1/5W J T "AVR 18 ONLY"
R604	RCFT-E122J-000	RESISTOR-CARBON FILM	1.2Kohm 1/5W J T
R605	RCFT-E101J-000	RESISTOR-CARBON FILM	100ohm 1/5W J T
R606	RCFT-E332J-000	RESISTOR-CARBON FILM	3.3Kohm 1/5W J T
R607	RCFT-E561J-000	RESISTOR-CARBON FILM	560ohm 1/5W J T
R608	RCFT-E331J-000	RESISTOR-CARBON FILM	330ohm 1/5W J T
R609	RCFT-E331J-000	RESISTOR-CARBON FILM	330ohm 1/5W J T
R610	RCFT-E4R7J-000	RESISTOR-CARBON FILM	4.7ohm 1/5W J T
R611	RCFT-E271J-000	RESISTOR-CARBON FILM	270ohm 1/5W J T
R612	RCFT-E221J-000	RESISTOR-CARBON FILM	220ohm 1/5W J T
R613	RCFT-E221J-000	RESISTOR-CARBON FILM	220ohm 1/5W J T
R614	RCFT-E104J-000	RESISTOR-CARBON FILM	100Kohm 1/5W J T
R618	RCFT-E104J-000	RESISTOR-CARBON FILM	100Kohm 1/5W J T
R621	RCFT-E472J-000	RESISTOR-CARBON FILM	4.7Kohm 1/5W J T
R622	RCFT-E683J-000	RESISTOR-CARBON FILM	68Kohm 1/5W J T
R624	RCFT-E273J-000	RESISTOR-CARBON FILM	27Kohm 1/5W J T "AVR 5 ONLY"
R624	RCFT-E473J-000	RESISTOR-CARBON FILM	47Kohm 1/5W J T "AVR 18 ONLY"
R625	RCFT-E102J-000	RESISTOR-CARBON FILM	1Kohm 1/5W J T
R626	RCFT-E472J-000	RESISTOR-CARBON FILM	4.7Kohm 1/5W J T
R627	RCFT-E220J-000	RESISTOR-CARBON FILM	22ohm 1/5W J T

Ref. No.	Part No.	Description		
R628	RCFT-E472J-000	RESISTOR-CARBON FILM	4.7Kohm 1/5W J T	
R629	RCFT-E472J-000	RESISTOR-CARBON FILM	4.7Kohm 1/5W J T	
R630	RCFT-E103J-000	RESISTOR-CARBON FILM	10Kohm 1/5W J T	
R631	RCFT-E222J-000	RESISTOR-CARBON FILM	2.2Kohm 1/5W J T	
R633	RCFT-E101J-000	RESISTOR-CARBON FILM	100ohm 1/5W J T	
R634	RCFT-E472J-000	RESISTOR-CARBON FILM	4.7Kohm 1/5W J T	
R636	RCFT-E220J-000	RESISTOR-CARBON FILM	22ohm 1/5W J T	
R637	RCFT-E621J-000	RESISTOR-CARBON FILM	620ohm 1/5W J T	"AVR 5 ONLY"
R637	RCFT-E390J-000	RESISTOR-CARBON FILM	390ohm 1/5W J T	"AVR 18 ONLY"
R638	RCFT-E103J-000	RESISTOR-CARBON FILM	10Kohm 1/5W J T	
R640	RCFT-E101J-000	RESISTOR-CARBON FILM	100ohm 1/5W J T	
R641	RCFT-E473J-000	RESISTOR-CARBON FILM	47Kohm 1/5W J T	
R642	RCFT-E332J-000	RESISTOR-CARBON FILM	3.3Kohm 1/5W J T	
R643	RCFT-E103J-000	RESISTOR-CARBON FILM	10Kohm 1/5W J T	
R645	RCFT-E103J-000	RESISTOR-CARBON FILM	10Kohm 1/5W J T	
R646	RCFT-E471J-000	RESISTOR-CARBON FILM	470ohm 1/5W J T	
R647	RCFT-E103J-000	RESISTOR-CARBON FILM	10Kohm 1/5W J T	
R648	RCFT-E101J-000	RESISTOR-CARBON FILM	100ohm 1/5W J T	
R649	RCFT-E102J-000	RESISTOR-CARBON FILM	1Kohm 1/5W J T	
R650	RCFT-E102J-000	RESISTOR-CARBON FILM	1Kohm 1/5W J T	
R651	RCFT-E102J-000	RESISTOR-CARBON FILM	1Kohm 1/5W J T	
R659	RCFT-E102J-000	RESISTOR-CARBON FILM	1Kohm 1/5W J T	
R660	RCFT-E102J-000	RESISTOR-CARBON FILM	1Kohm 1/5W J T	
R661	RCFT-E152J-000	RESISTOR-CARBON FILM	1.5Kohm 1/5W J T	
R662	RCFT-E152J-000	RESISTOR-CARBON FILM	1.5Kohm 1/5W J T	
R663	RCFT-E272J-000	RESISTOR-CARBON FILM	2.7Kohm 1/5W J T	
R664	RCFT-E272J-000	RESISTOR-CARBON FILM	2.7Kohm 1/5W J T	
R665	RCFT-E622J-000	RESISTOR-CARBON FILM	6.2Kohm 1/5W J T	
R666	RCFT-E622J-000	RESISTOR-CARBON FILM	6.2Kohm 1/5W J T	
R667	RCFT-E184J-000	RESISTOR-CARBON FILM	180Kohm 1/5W J T	"AVR 5 ONLY"
R667	RCFT-E274J-000	RESISTOR-CARBON FILM	270Kohm 1/5W J T	"AVR 18 ONLY"
R668	RCFT-E184J-000	RESISTOR-CARBON FILM	180Kohm 1/5W J T	"AVR 5 ONLY"
R668	RCFT-E274J-000	RESISTOR-CARBON FILM	270Kohm 1/5W J T	"AVR 18 ONLY"
R669	RCFT-E124J-000	RESISTOR-CARBON FILM	120Kohm 1/5W J T	"AVR 5 ONLY"
R669	RCFT-E224J-000	RESISTOR-CARBON FILM	220Kohm 1/5W J T	"AVR 18 ONLY"
R670	RCFT-E124J-000	RESISTOR-CARBON FILM	120Kohm 1/5W J T	"AVR 5 ONLY"
R670	RCFT-E224J-000	RESISTOR-CARBON FILM	220Kohm 1/5W J T	"AVR 18 ONLY"
R671	RCFT-E473J-000	RESISTOR-CARBON FILM	47Kohm 1/5W J T	
R672	RCFT-E101J-000	RESISTOR-CARBON FILM	100ohm 1/5W J T	
R674	RCFT-E223J-000	RESISTOR-CARBON FILM	22Kohm 1/5W J T	
R675	RCFT-E473J-000	RESISTOR-CARBON FILM	47Kohm 1/5W J T	
R676	RCFT-E223J-000	RESISTOR-CARBON FILM	22Kohm 1/5W J T	
R683	RCFT-E182J-000	RESISTOR-CARBON FILM	1.8Kohm 1/5W J T	
R684	RCFT-E102J-000	RESISTOR-CARBON FILM	1Kohm 1/5W J T	
R685	RCFT-E151J-000	RESISTOR-CARBON FILM	150ohm 1/5W J T	"AVR 18 ONLY"
		TRANSISTORS		
Q601	TRTC-0010Y-SD0	TRANSISTOR N-H FREQ	KTC3194-Y TO92	
Q603	TRTC-0016G-SD0	TRANSISTOR N-H FREQ	KTC3198-GR TO92	
Q605	TRTA-00940-SD0	TRANSISTOR P-H FREQ	KRA107M W/RESIST TO92M	
Q606	TRTA-00940-SD0	TRANSISTOR P-H FREQ	KRA107M W/RESIST TO92M	
Q607	TRTA-00940-SD0	TRANSISTOR P-H FREQ	KRA107M W/RESIST TO92M	
Q608	TRTA-00940-SD0	TRANSISTOR P-H FREQ	KRA107M W/RESIST TO92M	
Q609	TRTD-00200-SD0	TRANSISTOR N-L FREQ	KTD-1302 TO92	
Q610	TRTD-00200-SD0	TRANSISTOR N-L FREQ	KTD-1302 TO92	
Q611	TRTC-0016G-SD0	TRANSISTOR N-H FREQ	KTC3198-GR TO92	
Q612	TRTC-0016G-SD0	TRANSISTOR N-H FREQ	KTC3198-GR TO92	
		CONNECTORS		
TP601	KNCW-01490-2T9	CONNECTOR-WAFER	JE115-AT-02P	
TP602	KNCW-01490-2T9	CONNECTOR-WAFER	JE115-AT-02P	
TP603	KNCW-01490-2T9	CONNECTOR-WAFER	JE115-AT-02P	
CH602	KNCW-01510-ES9	CONNECTOR-WAFER	35237-1410 2M/M 14P	
		CONTROLS		
VR601	VFEB-A021B-472	RESISTOR-SEMI FIXED	RH0638C-4.7KB 4.7Kohm	
VR602	VFEB-A021B-473	RESISTOR-SEMI FIXED	RH0638C-47KB 47Kohm	
VR603	VFEB-A021B-224	RESISTOR-SEMI FIXED	RH0638C-220KB 220Kohm	
CT601	VCTC-00022-200	TRIMMER	CVCN06C200	

4-2. TONE P.C.BOARD

Ref. No.	Part No.	Description	
		CONTROLS	
VR701	VRAE-P050C-104	VR-ROTARY	RK14K1260106-100KΩ(C)x2
VR702	VRAE-P050C-104	VR-ROTARY	RK14K1260106-100KΩ(C)x2
VR703	VRAE-P049W-104	VR-ROTARY	RK11K1160106-100KΩ(W)
		CONNECTORS	
CW705	UM08-80850-000	WIRE-ASS'Y	2547#28x2,1007#26 400 GRY
CH702	U1T1-01520-Z10	WIRE-ASS'Y	1007#22 BLK-200 3.2pi
		RESISTORS	
R761	RCFT-E100J-000	RESISTOR-CARBON FILM	10ohm 1/5W J T
R762	RCFT-E101J-000	RESISTOR-CARBON FILM	100ohm 1/5W J T
R763	RCFT-E101J-000	RESISTOR-CARBON FILM	100ohm 1/5W J T
R764	RCFT-E333J-000	RESISTOR-CARBON FILM	33Kohm 1/5W J T
R765	RCFT-E561J-000	RESISTOR-CARBON FILM	560ohm 1/5W J T
R766	RCFT-E104J-000	RESISTOR-CARBON FILM	100Kohm 1/5W J T
R767	RCFT-E105J-000	RESISTOR-CARBON FILM	1Mohm 1/5W J T
R769	RCFT-E103J-000	RESISTOR-CARBON FILM	10Kohm 1/5W J T
R770	RCFT-E223J-000	RESISTOR-CARBON FILM	22Kohm 1/5W J T
R771	RCFT-E471J-000	RESISTOR-CARBON FILM	470ohm 1/5W J T
R772	RCFT-E471J-000	RESISTOR-CARBON FILM	470ohm 1/5W J T
R773	RCFT-E104J-000	RESISTOR-CARBON FILM	100Kohm 1/5W J T
R774	RCFT-E104J-000	RESISTOR-CARBON FILM	100Kohm 1/5W J T
R775	RCFT-E105J-000	RESISTOR-CARBON FILM	1Mohm 1/5W J T
R776	RCFT-E105J-000	RESISTOR-CARBON FILM	1Mohm 1/5W J T
R777	RCFT-E471J-000	RESISTOR-CARBON FILM	470ohm 1/5W J T
R778	RCFT-E471J-000	RESISTOR-CARBON FILM	470ohm 1/5W J T
R779	RCFT-E104J-000	RESISTOR-CARBON FILM	100Kohm 1/5W J T
R780	RCFT-E104J-000	RESISTOR-CARBON FILM	100Kohm 1/5W J T
R781	RCFT-E222J-000	RESISTOR-CARBON FILM	2.2Kohm 1/5W J T
R782	RCFT-E222J-000	RESISTOR-CARBON FILM	2.2Kohm 1/5W J T
R783	RCFT-E223J-000	RESISTOR-CARBON FILM	22Kohm 1/5W J T
R784	RCFT-E223J-000	RESISTOR-CARBON FILM	22Kohm 1/5W J T
R785	RCFT-E561J-000	RESISTOR-CARBON FILM	560ohm 1/5W J T
R786	RCFT-E561J-000	RESISTOR-CARBON FILM	560ohm 1/5W J T
R787	RCFT-E392J-000	RESISTOR-CARBON FILM	3.9Kohm 1/5W J T
R788	RCFT-E392J-000	RESISTOR-CARBON FILM	3.9Kohm 1/5W J T
R799	RCFT-E152J-000	RESISTOR-CARBON FILM	1.5Kohm 1/5W J T
R800	RCFT-E152J-000	RESISTOR-CARBON FILM	1.5Kohm 1/5W J T
		MISCELLANEOUS	
PCB	PCSR-04810-11B	PCB-TONE	A1R-481C
		INTEGRATED CIRCUITS	
IC705	ICOP-03150-SG0	IC OP AMP	NJM2068M SOP8
		CAPACITORS	
C731	CEET-F470M-CI0	CAPACITOR E/ALUMINUM	47uF M 25V 5x11 T
C732	CEET-F470M-CI0	CAPACITOR E/ALUMINUM	47uF M 25V 5x11 T
C733	CCAT-J101K-AAB	CAPACITOR CERAMIC	100PF K 50V B T
C734	CCAT-J101K-AAB	CAPACITOR CERAMIC	100PF K 50V B T
C735	CCAT-J330J-AAZ	CAPACITOR CERAMIC	33PF J 50V SL T
C736	CCAT-J330J-AAZ	CAPACITOR CERAMIC	33PF J 50V SL T
C737	CEET-J100M-CI0	CAPACITOR E/ALUMINUM	10uF M 50V 5x11 T
C738	CEET-J100M-CI0	CAPACITOR E/ALUMINUM	10uF M 50V 5x11 T
C739	CEET-J100M-CI0	CAPACITOR E/ALUMINUM	10uF M 50V 5x11 T
C740	CEET-J100M-CI0	CAPACITOR E/ALUMINUM	10uF M 50V 5x11 T
C741	CFMT-N392J-DJ0	CAPACITOR F/POLYESTR	0.0039uF J 100V 5.8x12 T
C742	CFMT-N392J-DJ0	CAPACITOR F/POLYESTR	0.0039uF J 100V 5.8x12 T
C743	CFMT-N183J-EK0	CAPACITOR F/POLYESTR	0.018uF J 100V 7.3x13 T
C744	CFMT-N183J-EK0	CAPACITOR F/POLYESTR	0.018uF J 100V 7.3x13 T
C745	CFMT-N153J-EK0	CAPACITOR F/POLYESTR	0.015uF J 100V 7.1x13 T
C746	CFMT-N153J-EK0	CAPACITOR F/POLYESTR	0.015uF J 100V 7.1x13 T
C747	CFMT-N823J-IK0	CAPACITOR F/POLYESTR	0.082uF J 100V 10.6x14 T
C748	CFMT-N823J-IK0	CAPACITOR F/POLYESTR	0.082uF J 100V 10.6x14 T

4-3. ST-BY P.C.BOARD

		CONNECTORS	
CW702	U508-4M714-250	WIRE-ASS'Y	1007#26 YEL-140 5P

Ref. No.	Part No.	Description	
		MISCELLANEOUS	
PCB	PCSR-04810-11B	PCB-ST BY	A1R-481D
SW704	SWTA-00220-060	SWITCH-TACT	SKHV10910(A) 12V 50mA
		DIODES	
LD707	DPLE-00280-RG0	DISPLAY-LED	SAM5270 RED/GRN

4-4. MUTE P.C.BOARD

		CONNECTORS	
CN703	KNCW-00160-3S9	CONNECTOR-WAFER	53015-0310 2mm-WHT
		MISCELLANEOUS	
PCB	PCSR-04810-11B	PCB-MUTE	A1R-481E
SW726	SWTA-00220-060	SWITCH-TACT	SKHV10910(A) 12V 50mA

4-5. ENCODER VOLUME P.C.BOARD

		CONTROLS	
SW750	SWRT-00200-020	ENCODER VOLUME	EC16B243040H
		CONNECTORS	
CN704	KNCW-00160-5S9	CONNECTOR-WAFER	53015-0510 2mm-WHT
		RESISTORS	
R757	RCFT-E103J-000	RESISTOR-CARBON FILM	10Kohm 1/5W J T
R758	RCFT-E103J-000	RESISTOR-CARBON FILM	10Kohm 1/5W J T
R759	RCFT-E103J-000	RESISTOR-CARBON FILM	10Kohm 1/5W J T
R760	RCFT-E103J-000	RESISTOR-CARBON FILM	10Kohm 1/5W J T
		TRANSISTORS	
Q711	TRTC-01700-SD0	TRANSISTOR N-H FREQ	KRC107M W/RESIST TO92M
Q712	TRTC-01700-SD0	TRANSISTOR N-H FREQ	KRC107M W/RESIST TO92M
		MISCELLANEOUS	
PCB	PCSR-04810-11B	PCB-ENCODER VOLUME	A1R-481F
		CAPACITORS	
C750	CCAT-E222M-AAY	CAPACITOR CERAMIC	2200PF M 16V Y5R T
C751	CCAT-E222M-AAY	CAPACITOR CERAMIC	2200PF M 16V Y5R T

4-6. HEADPHONE P.C.BOARD

		CONTROLS	
SW766	SWPU-00602-060	SWITCH-PUSH	SPUN24X1H DC25V 1A
		RESISTORS	
R789	RMOH-J221J-040	RESISTOR-METAL OXIDE	220ohm 2W J H
R790	RMOH-J221J-040	RESISTOR-METAL OXIDE	220ohm 2W J H
R791	RCFT-E152J-000	RESISTOR-CARBON FILM	1.5Kohm 1/5W J T "AVR 18 ONLY"
R792	RCFT-E152J-000	RESISTOR-CARBON FILM	1.5Kohm 1/5W J T "AVR 18 ONLY"
		CAPACITORS	
C789	CCCT-J222K-0DB	CAPACITOR CERAMIC	2200PF K 50V B T "AVR 18 ONLY"
C790	CCCT-J222K-0DB	CAPACITOR CERAMIC	2200PF K 50V B T "AVR 18 ONLY"
		CONNECTORS	
CN708	U610-5M458-200	WIRE-ASS'Y	UL1007#20 GRN-580 6P
CN709	U510-4M432-200	WIRE-ASS'Y	UL1007#20 YEL-320 5P
CH703	U1T1-01520-Z10	WIRE-ASS'Y	1007#22 BLK-200 3.2pi
		MISCELLANEOUS	
JK702	SKPH-00332-66W	PHONE JACK	HTJ-064-11

Ref. No.	Part No.	Description	
PCB	PCSR-04810-11B	PCB-SPEAKER ON/OFF	A1R-481G
		DIODES	
D789	DDTS-00070-SO0	DIODE-SI	1SS133 (40V 0.11A) DO-40 T
D790	DDTS-00070-SO0	DIODE-SI	1SS133 (40V 0.11A) DO-40 T
		CAPACITORS	
C788	CCAT-J104Z-AAF	CAPACITOR CERAMIC	0.1uF Z 50V F T

4-7. VIDEO 3 INPUT P.C.BOARD

		CONNECTORS	
CW706	UM08-50860-000	WIRE-ASS'Y	1007#26,2547#28 BR,BK 460
CH705	U1T1-01520-Z10	WIRE-ASS'Y	1007#22 BLK-200 3.2pi
		RESISTORS	
R796	RCFT-E471J-000	RESISTOR-CARBON FILM	470ohm 1/5W J T
R797	RCFT-E471J-000	RESISTOR-CARBON FILM	470ohm 1/5W J T
R798	RCFT-E750J-000	RESISTOR-CARBON FILM	75ohm 1/5W J T
		MISCELLANEOUS	
JK701	SKRC-00380-031	SOCKET-RCA	JK0300081G
PCB	PCSR-04810-11B	PCB-VIDEO 3 INPUT	A1R-481H
		CAPACITORS	
C763	CCAT-J104Z-AAF	CAPACITOR CERAMIC	0.1uF Z 50V F T
C764	CCAT-J104Z-AAF	CAPACITOR CERAMIC	0.1uF Z 50V F T
C771	CCAT-J101K-AAB	CAPACITOR CERAMIC	100PF K 50V B T "AVR 18 ONLY"
C772	CCAT-J101K-AAB	CAPACITOR CERAMIC	100PF K 50V B T "AVR 18 ONLY"
C773	CCAT-J101K-AAB	CAPACITOR CERAMIC	100PF K 50V B T "AVR 18 ONLY"
C774	CCAT-J101K-AAB	CAPACITOR CERAMIC	100PF K 50V B T "AVR 18 ONLY"
C775	CEET-F330M-CI0	CAPACITOR E/ALUMINUM	33uF M 25V 5x11 T

4-8. HEAT SINK GUIDE P.C.BOARD

		MISCELLANEOUS	
PCB	PCSR-04810-11B	PCB-HEAT SINK GUIDE	A1R-481I

IC BLOCK DIAGRAMS

IC402, IC403: LC7821 ANALOG FUNCTION SELECTOR

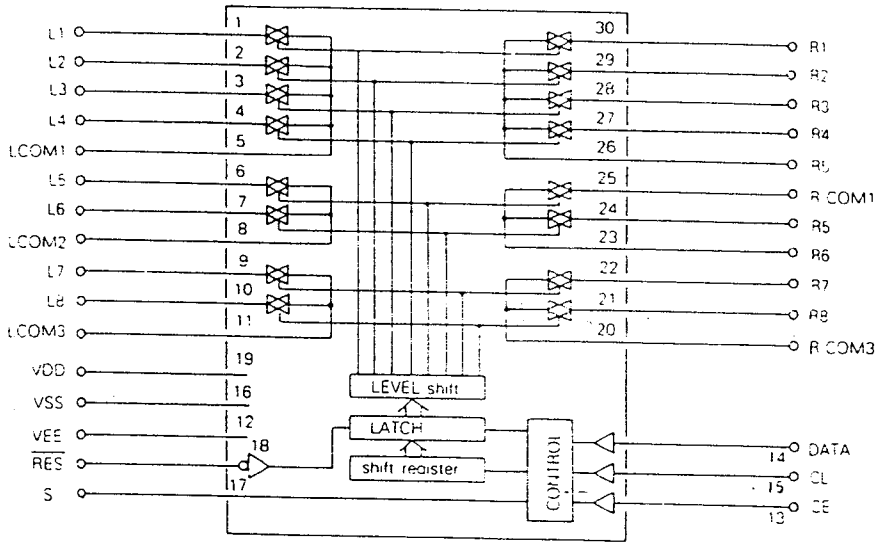

IC804: LC78213 ANALOG FUNCTION SELECTOR

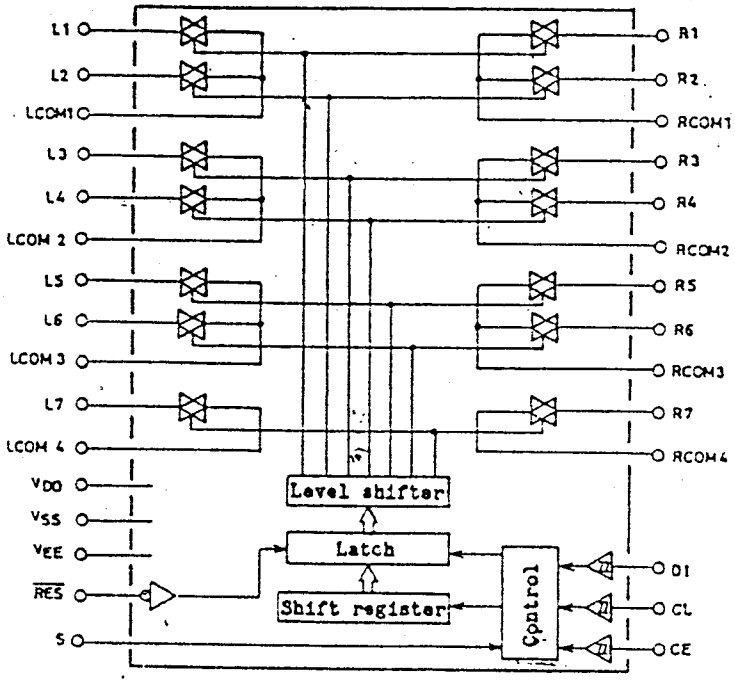

LA3401: IC603 FM/AM MPX IC

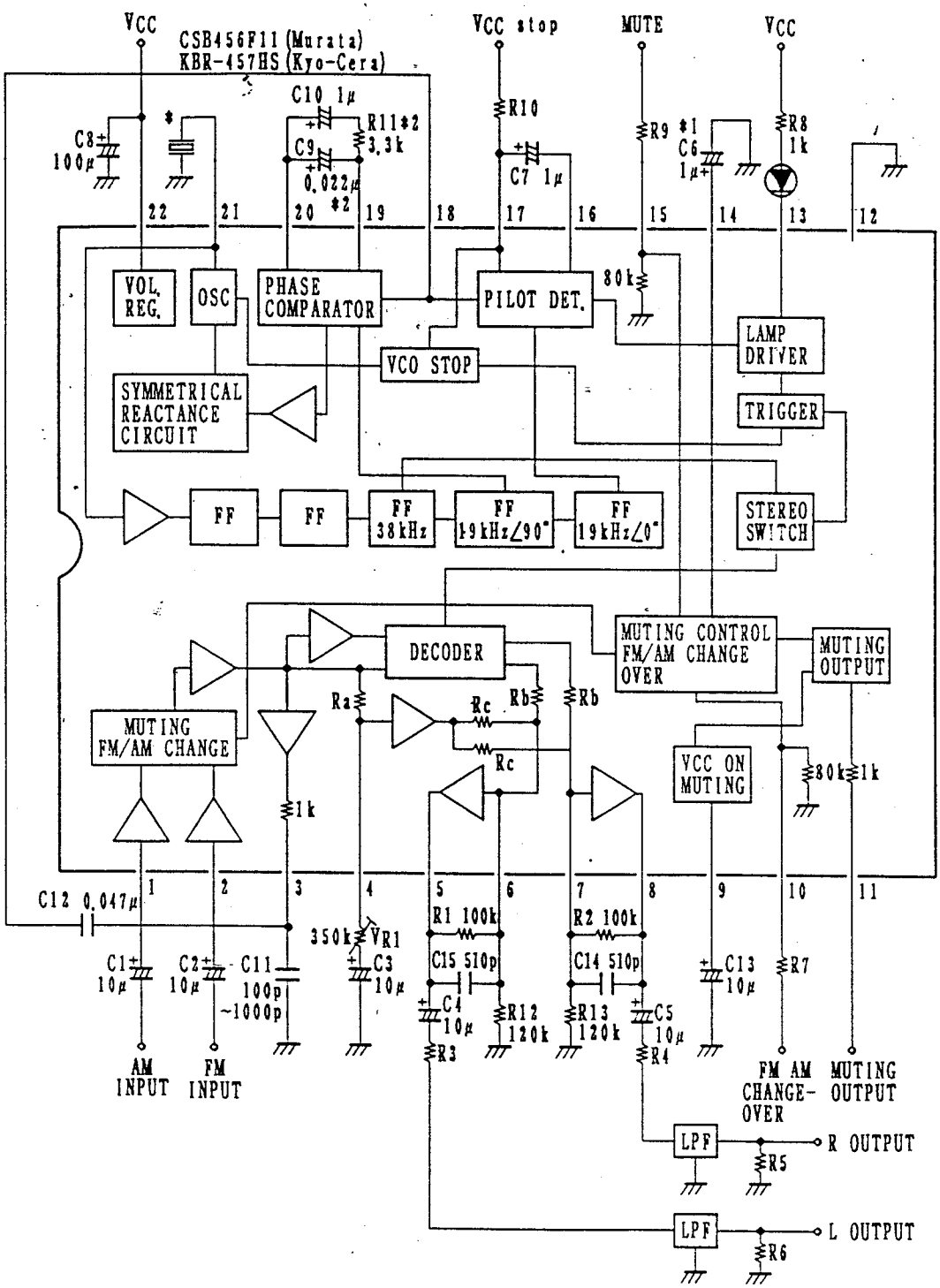

IC805, IC806, IC807:KIA9459F VOLUME CONTROL

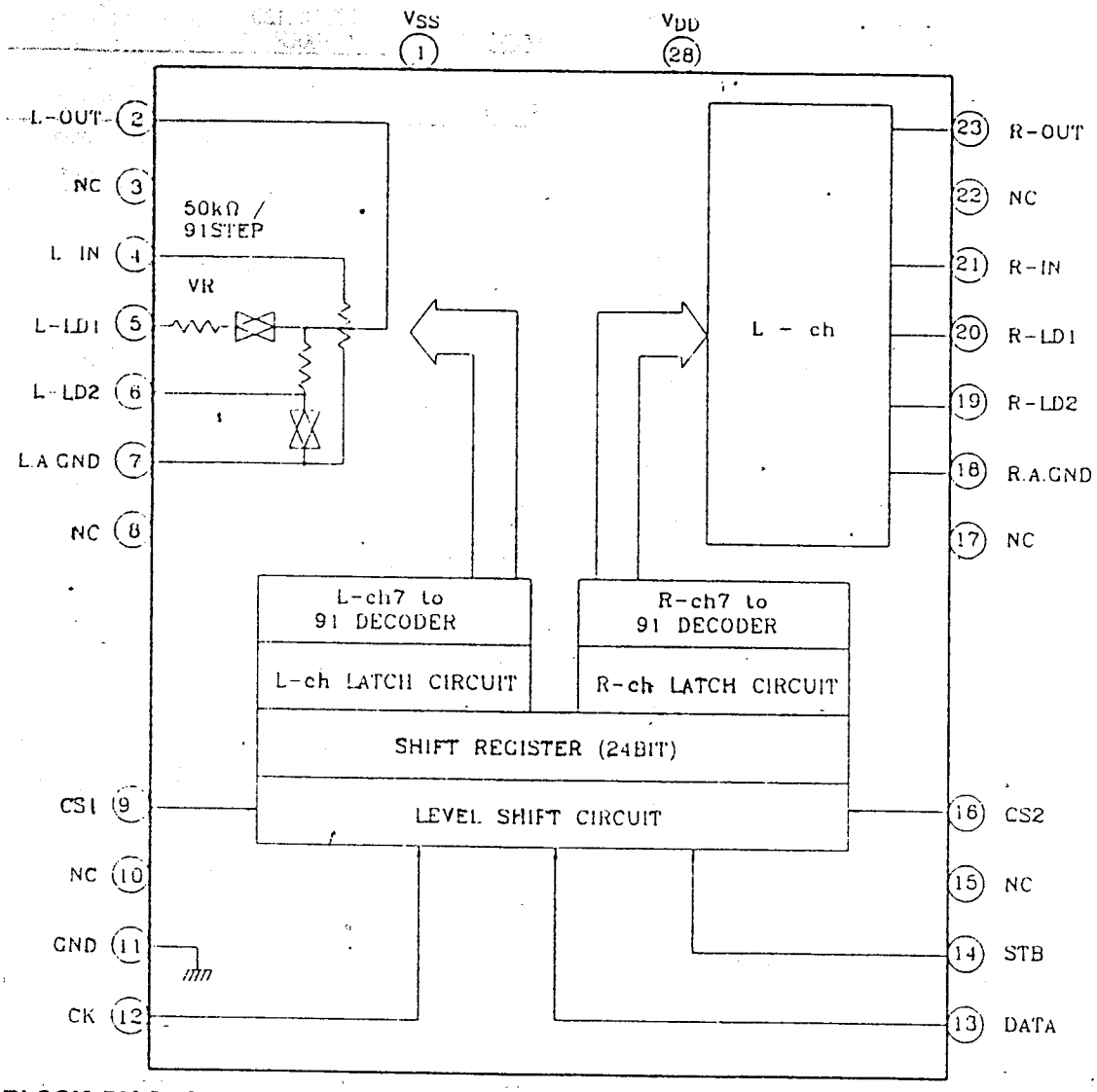

BLOCK DIAGRAM TDA7479: IC604 RDS DEMODULATOR + FILTER (AVR18RDS ONLY)

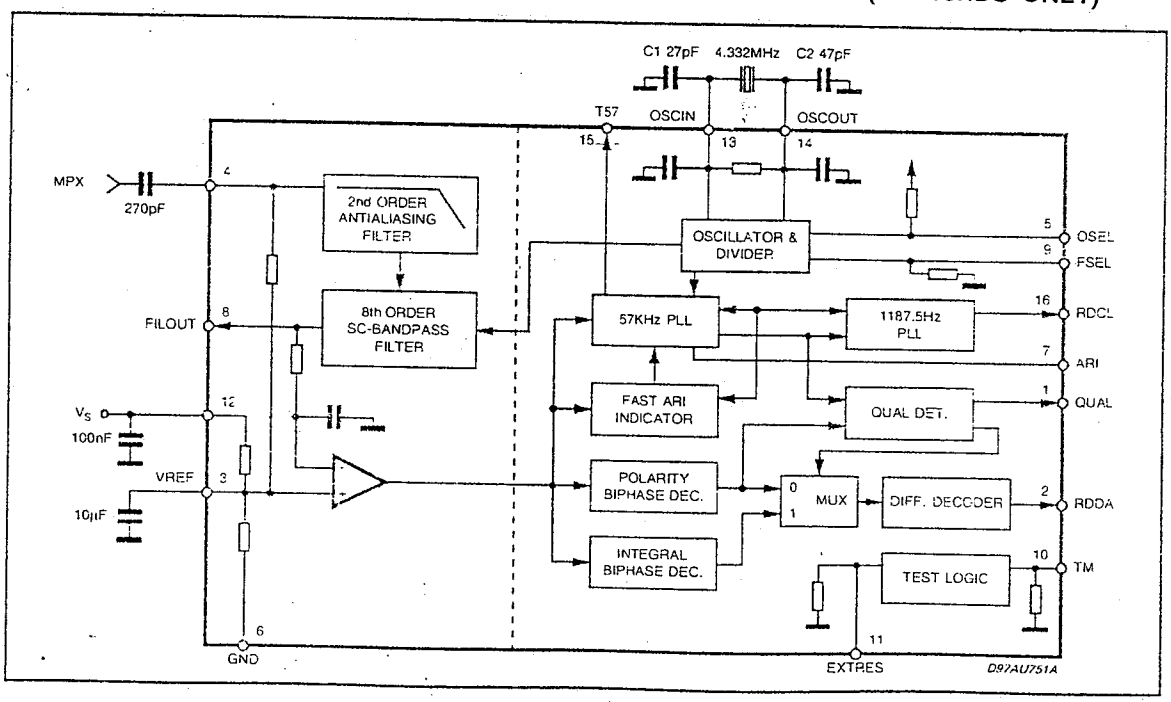

IC KIA7042: IC702 RESET

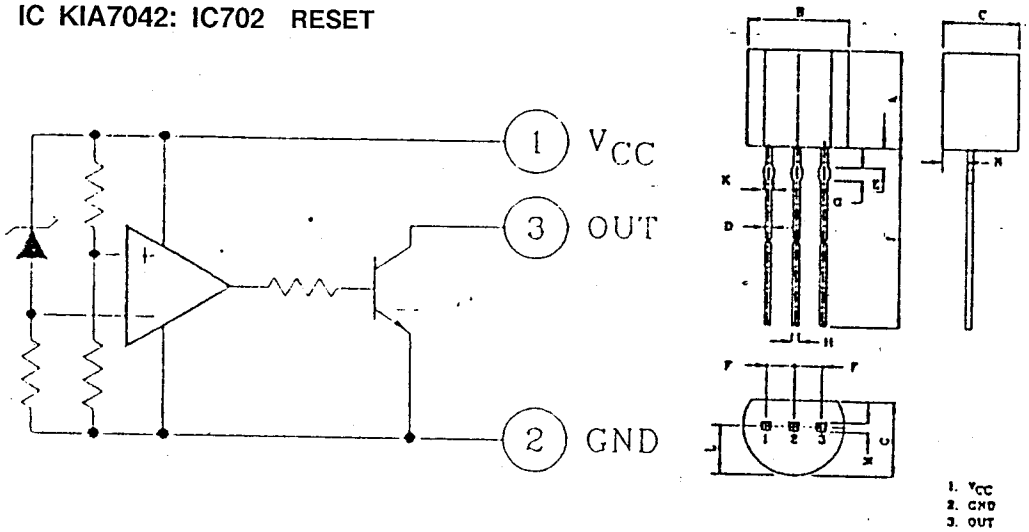

IC TFMT5.0: IC703 REMOTE RECEIVER

Block Diagram

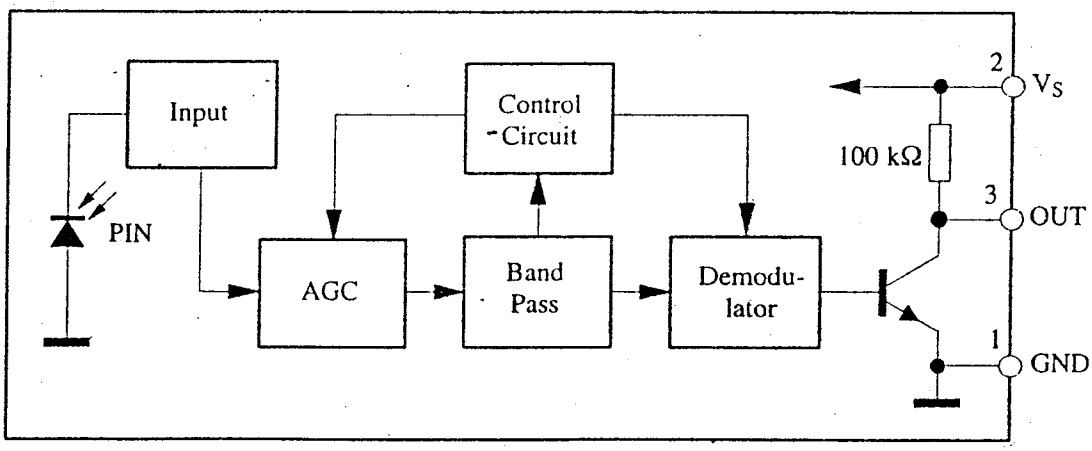

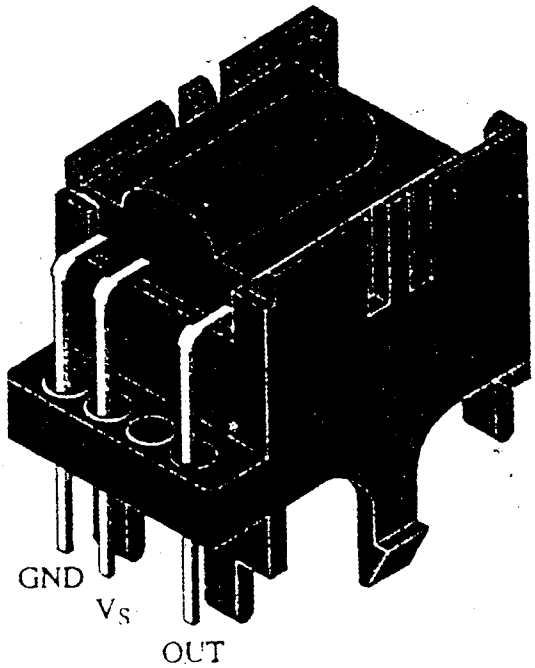

LC4966B: IC406 BIPOLAR SWITCH

Package Outline

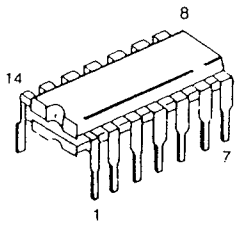

Block Diagram

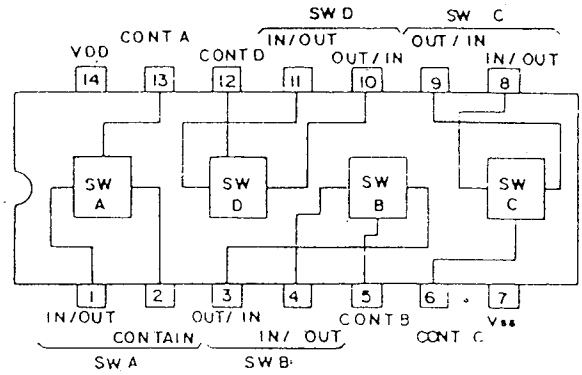

LTV817B: IC5 PHOTO COUPLER

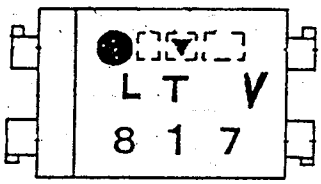

Pin No. and internal connection diagram

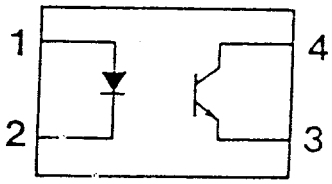

1. Anode
2. Cathode
3. Emitter
4. Collector

LA1266: IC601 AM/FM IF

Package Outline

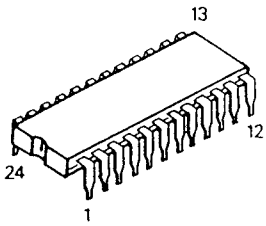

Block Diagram

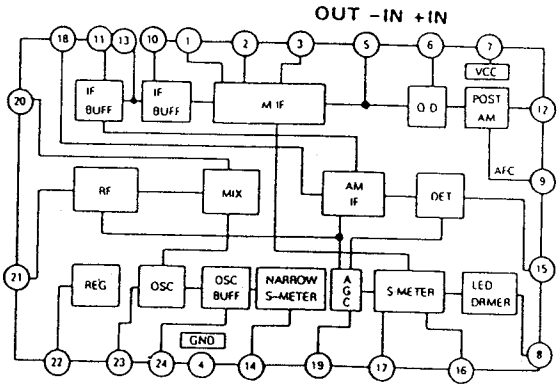

IC705, IC6, IC7, IC401, IC404, IC405, IC408, IC801, IC802, IC803, IC808, IC809, IC810, IC811:
NJM2068DD/ NJM4558M DUAL OP AMP

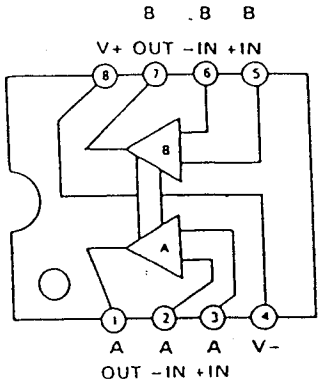

IC901: BA7625
VIDEO SIGNAL SWITCHER

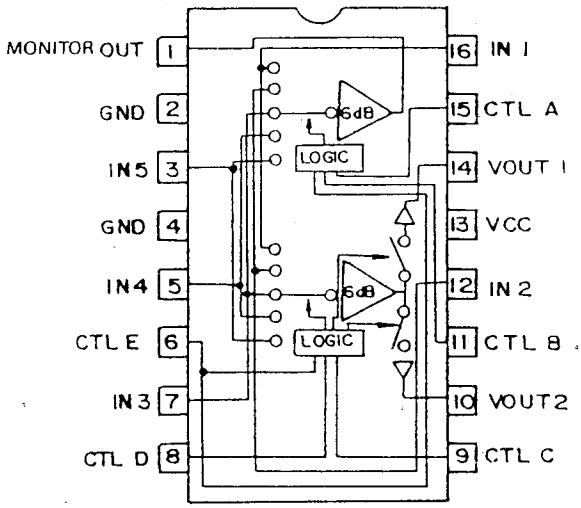

24C0281P: IC704 2K CMOS EEPROM

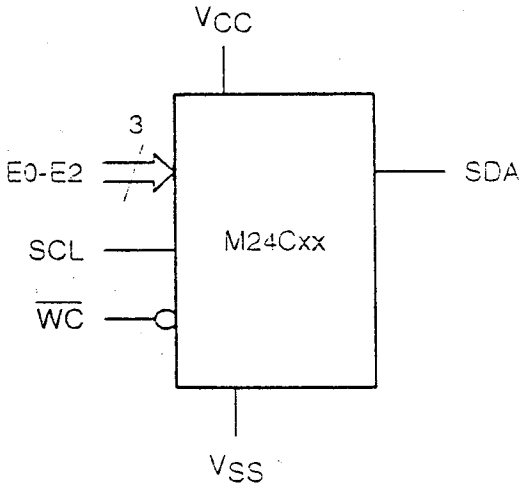

IC3: KA79XX REGULATOR

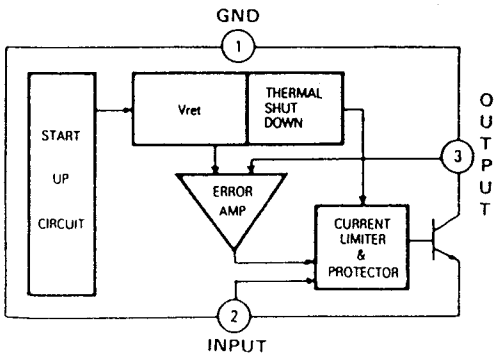

IC1, IC2, IC4:
KA78XX REGULATOR

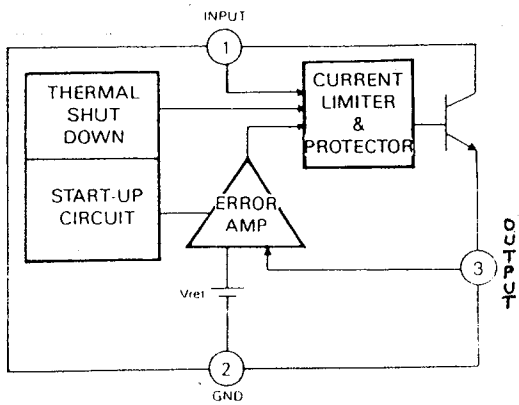

IC407 DOLBY PRO LOGIC SURROUND DECODER : NJW1103F

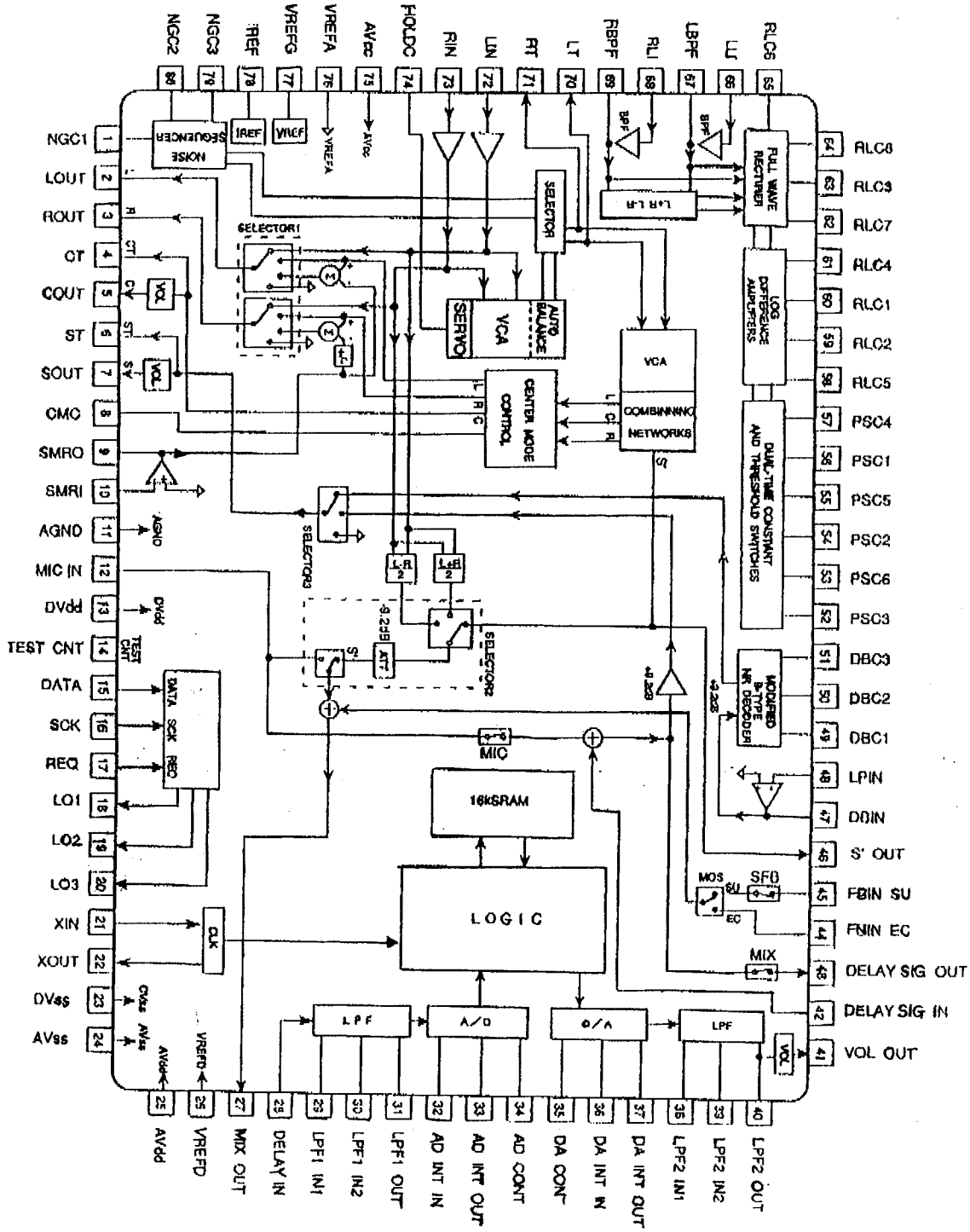

LC7218JM: IC602 PLL FREQUENCY SYNTHESIZER

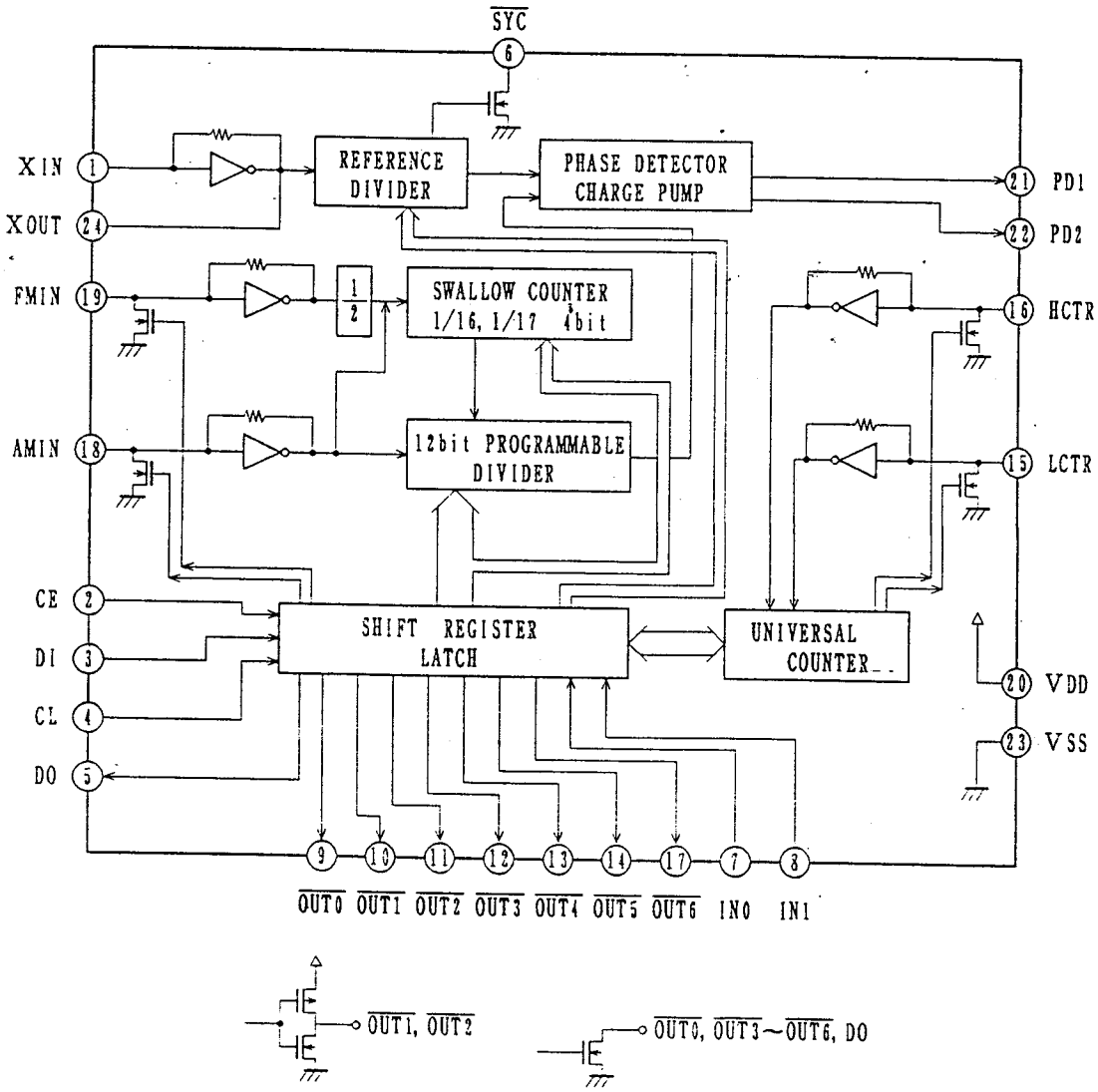

FRONT END: FE601 (FTA3-509H) U.S.A. Version

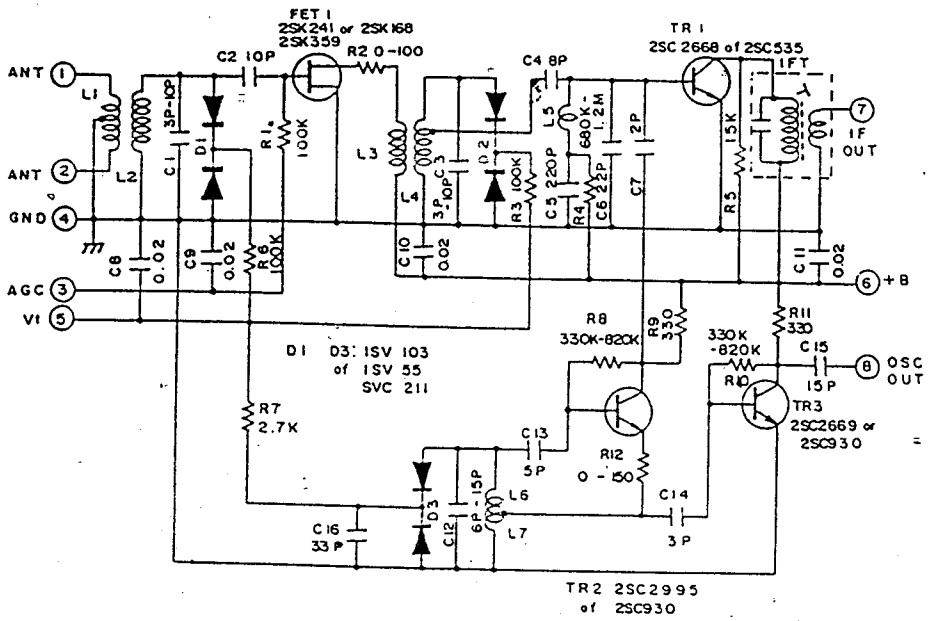

FRONT END: FE601 (FTA4-460H) EU. Version

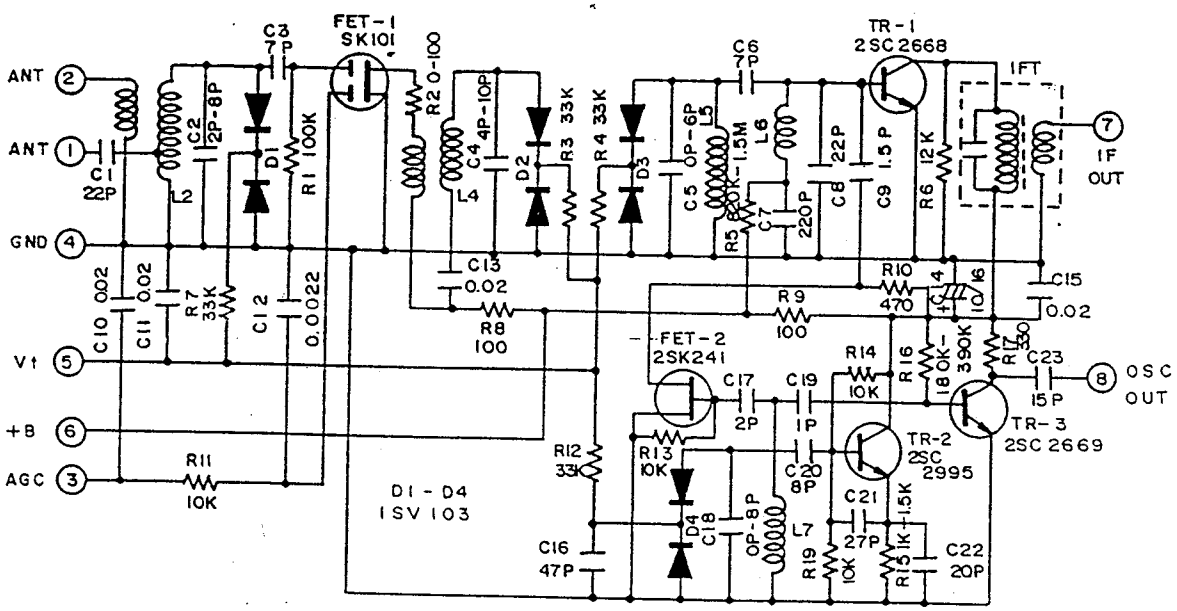

TRANSISTORS LEAD IDENTIFICATION

TRANSISTOR	FRONT VIEW	BOTTOM VIEW
KTD1302 KTC3200/KTC2240 KTC3198/KTC1815 KTC1923/KTC3194 KTA2400 KTA1268/KTA970 KTA1266/KTA1015	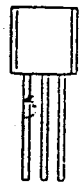	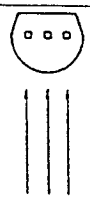
DTC114YS DTA114YS KRA107M	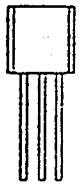	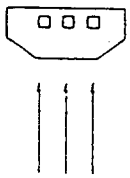
MPSA06 MPSA56	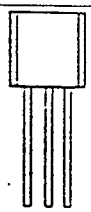	
KTA1024 KTC3206 KTA1267Y	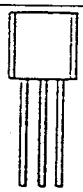	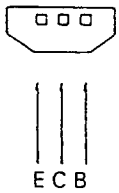
2SC4137 2SC4883 2SA1859	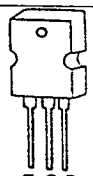	
2SK168D	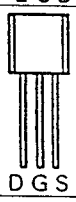	
2SA1695-Y 2SC4468-Y	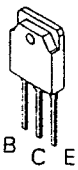	

TERMINAL NAME

D→DRAIN	B→BASE
G→GATE	C→COLLECTOR
S→SOURCE	E→EMITTER

MAIN P.C BOARD

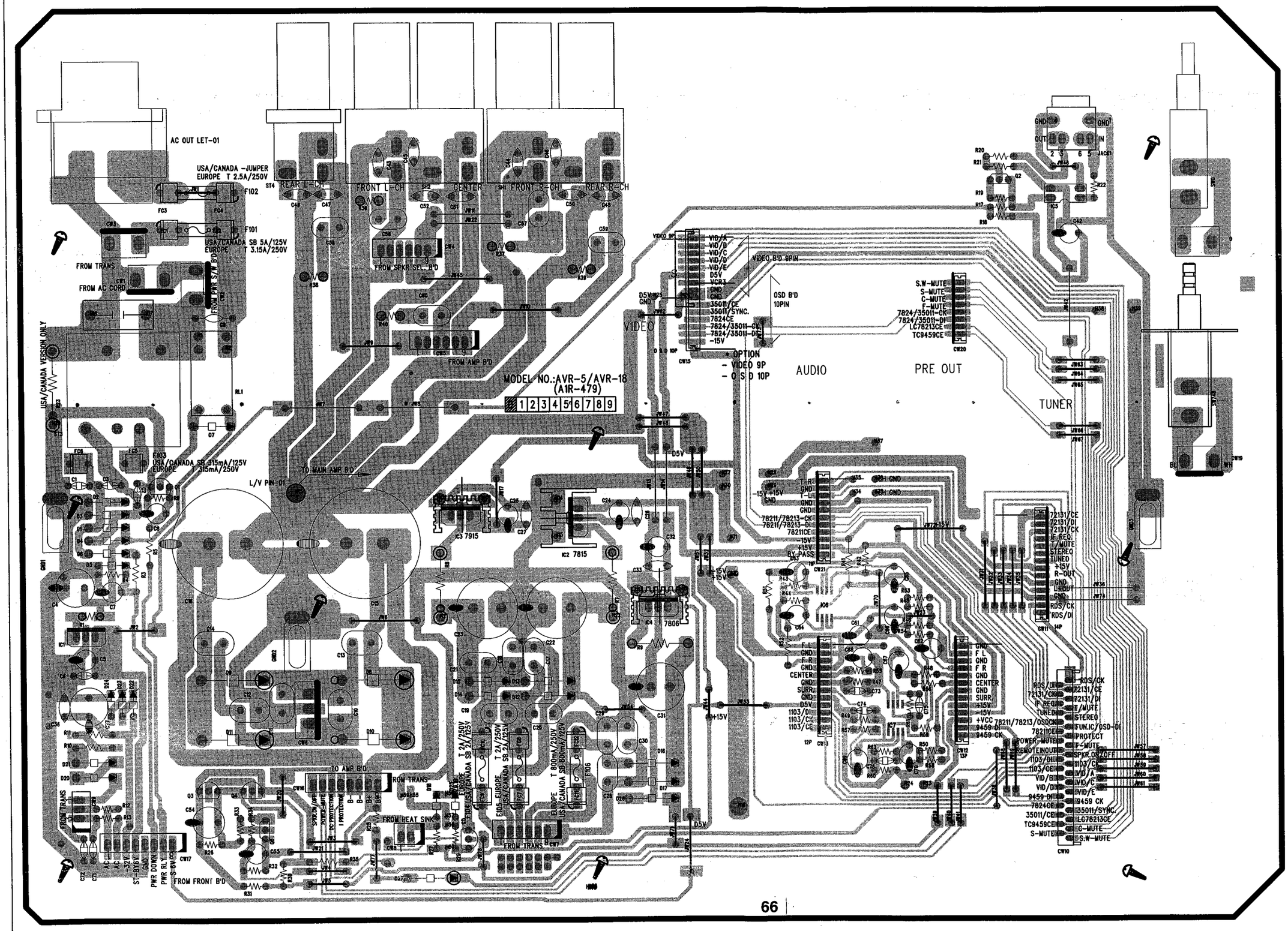

P. C. BOARD

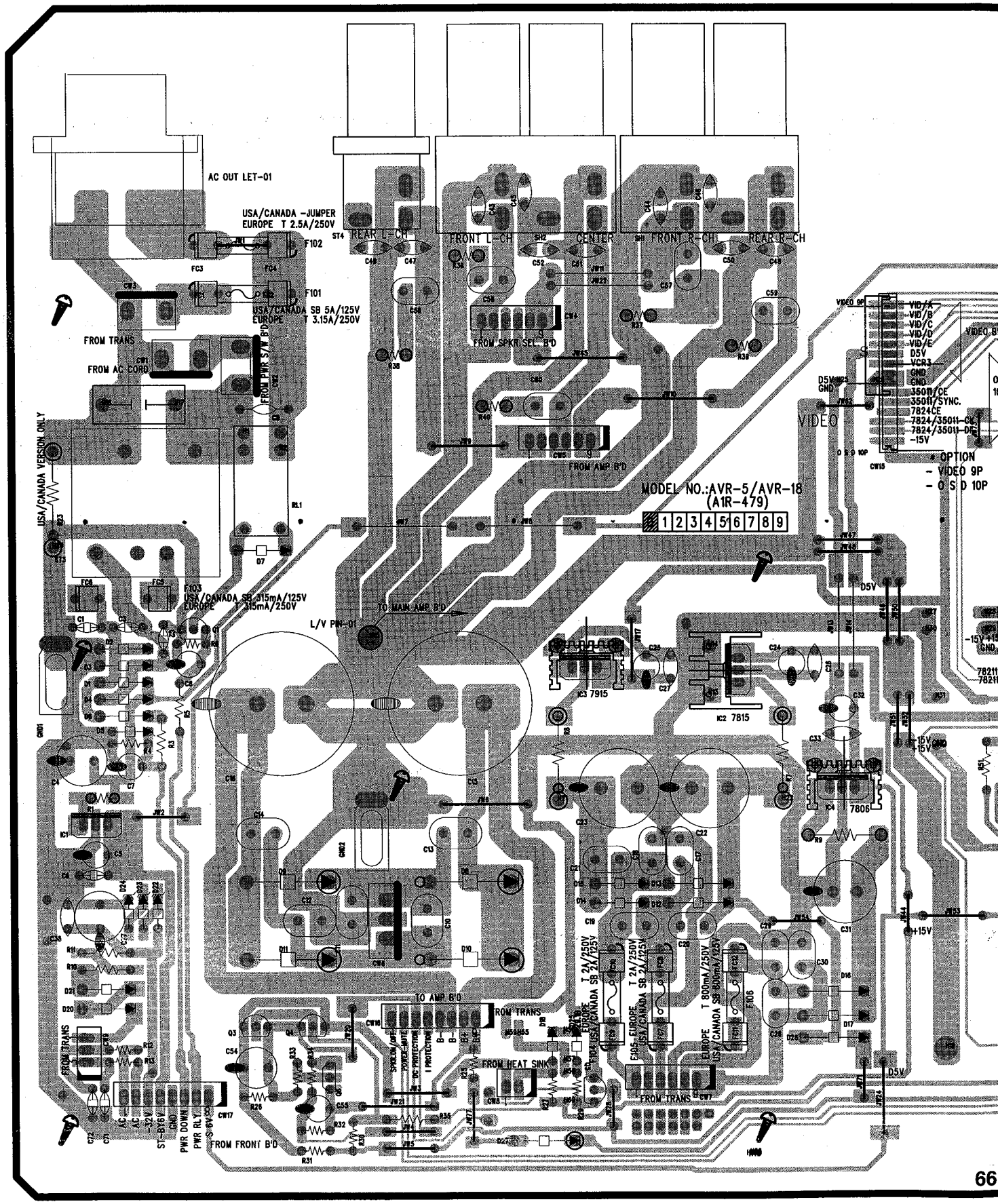
AC OUT LET-01
USA/CANADA -JUMPER
EUROPE T 2.5A/250V
F102
F101
USA/CANADA SB 5A/125V
EUROPE T 3.15A/250V
FROM TRANS
FROM AC CORD
FROM PWR S/W B'D
USA/CANADA VERSION ONLY
F103
USA/CANADA SB 315mA/125V
EUROPE T 315mA/250V
L/V PIN-01
TO MAIN AMP B'D
REAR L-CH
FRONT L-CH
CENTER
FRONT R-CH
REAR R-CH
FROM SPKR SEL. B'D
FROM AMP B'D
MODEL NO.:AVR-5/AVR-18
(A1R-479)
1 2 3 4 5 6 7 8 9
VIDEO
VIDEO 9P
VID/A
VID/B
VID/C
VID/D
VID/E
D5V
VCR3
GND
GND
350H/CE
350H/SYNC.
7824CE
7824/35011-CK
7824/35011-DE
-15V
O S D 10P
CW15
* OPTION
- VIDEO 9P
- O S D 10P
IC3 7915
IC2 7815
IC4 7806
TO AMP B'D
FROM TRANS
FROM HEAT SINK
FROM FRONT B'D
ST-B16V
AC
AC
-32V
GND
PWR DOWN
PWR RLY
-6V
T 2A/250V
USA/CANADA SB 2A/125V
EUROPE
T 800mA/250V
USA/CANADA SB 800mA/125V
F105
F106
SPKR ON/OFF
PWR SAVE
DC PROTECTION
I PROTECTION
B-
B-
B+
B+
D5V
+15V
-15V

MAIN P.C BOARD

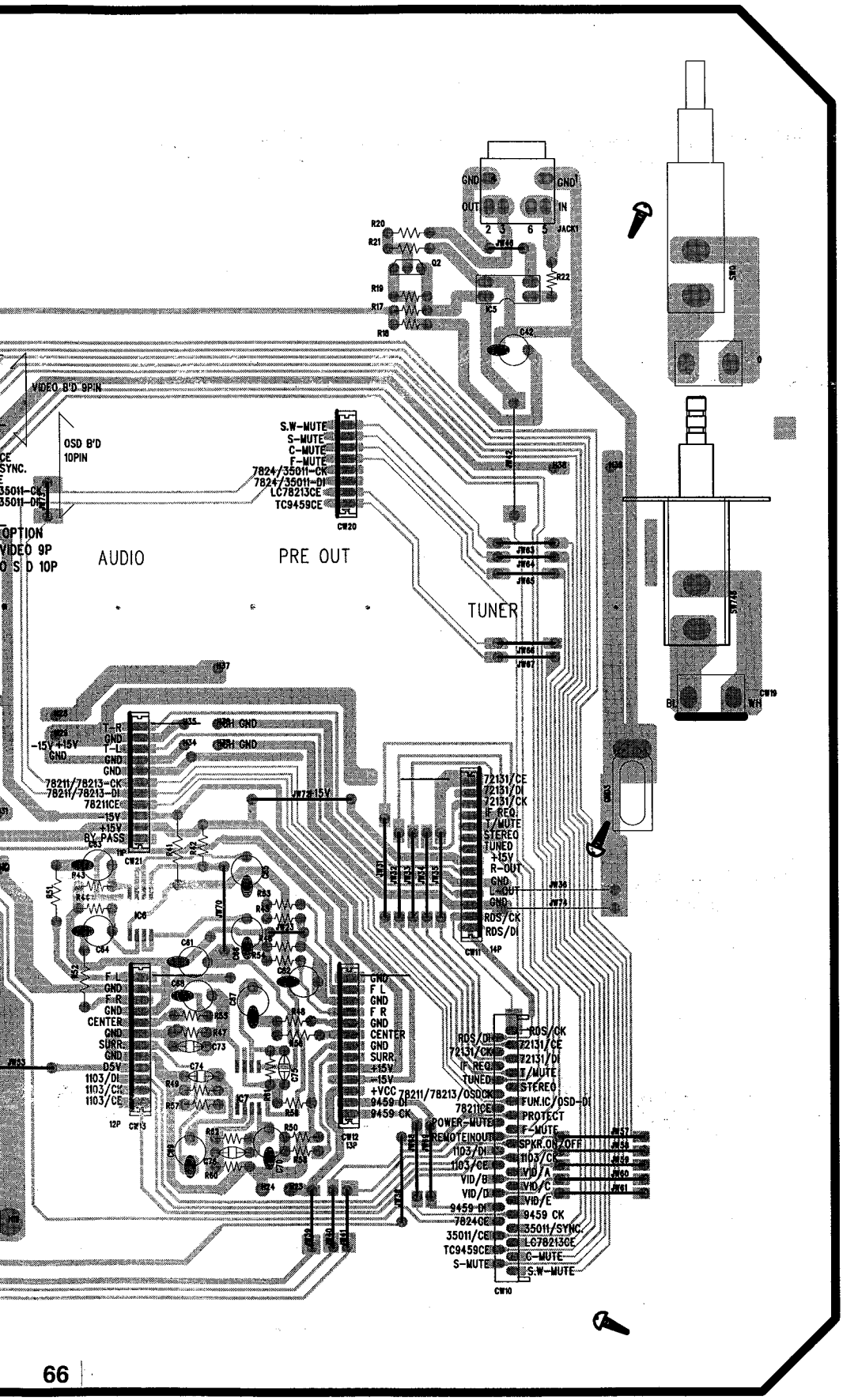

AMP P.C BOARD

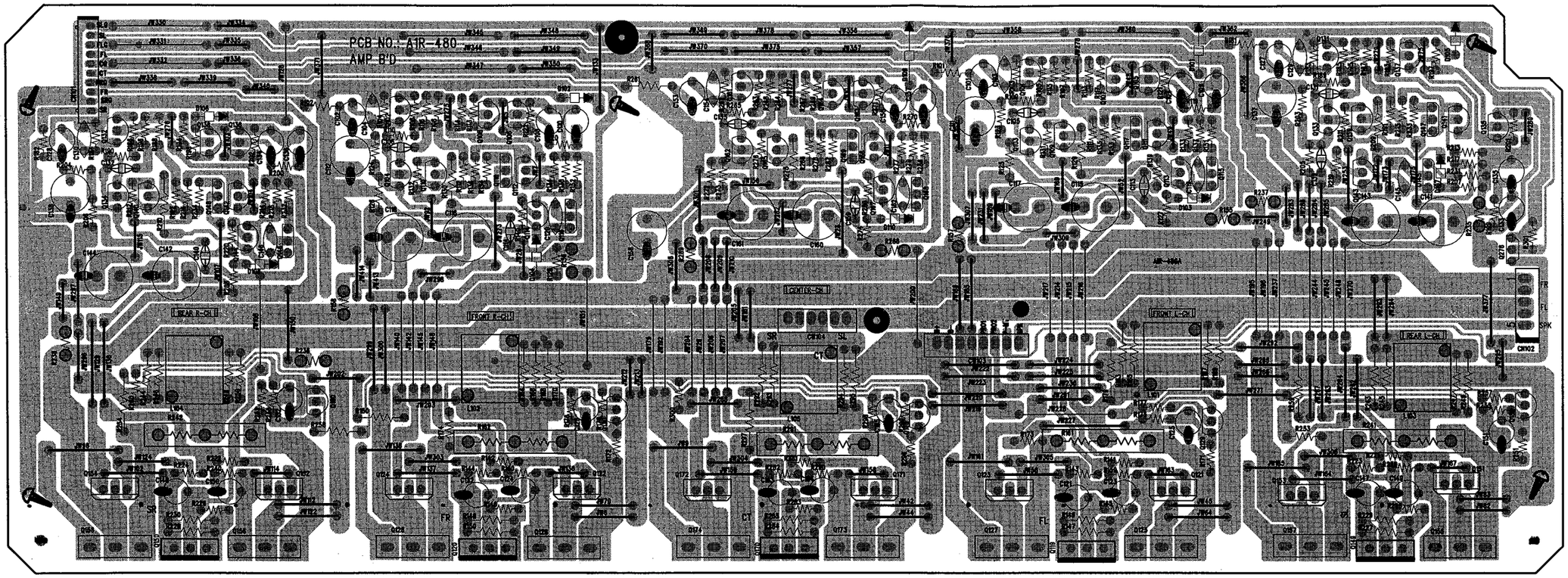

INPUT & PRO-LOGIC P.C.BOARD

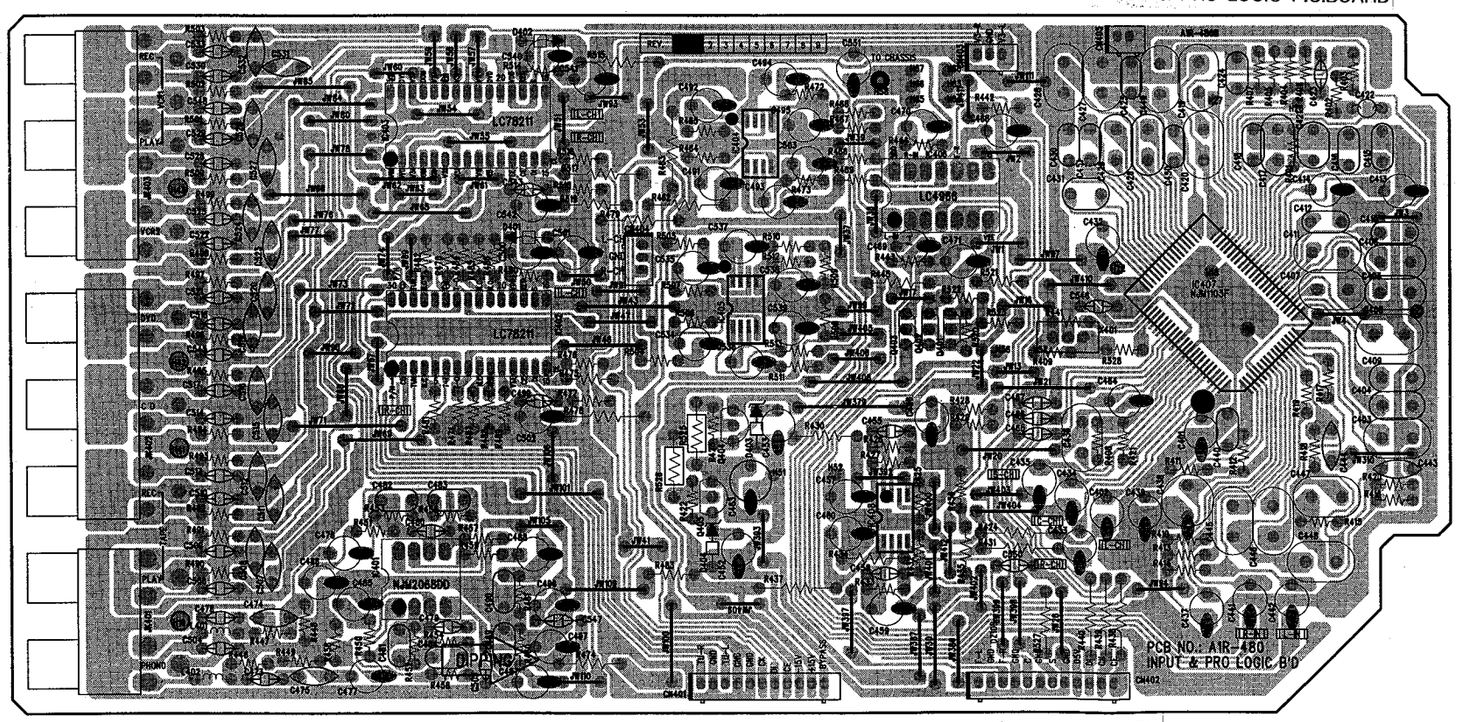

VIDEO P.C BOARD

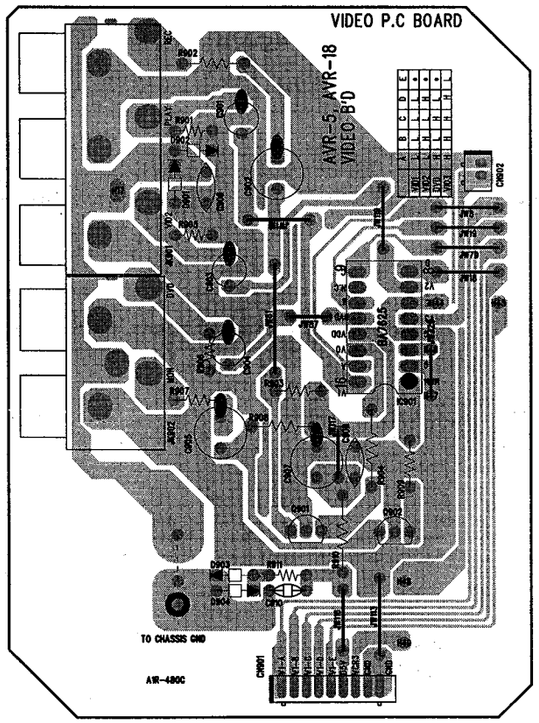

P. C. BOARD

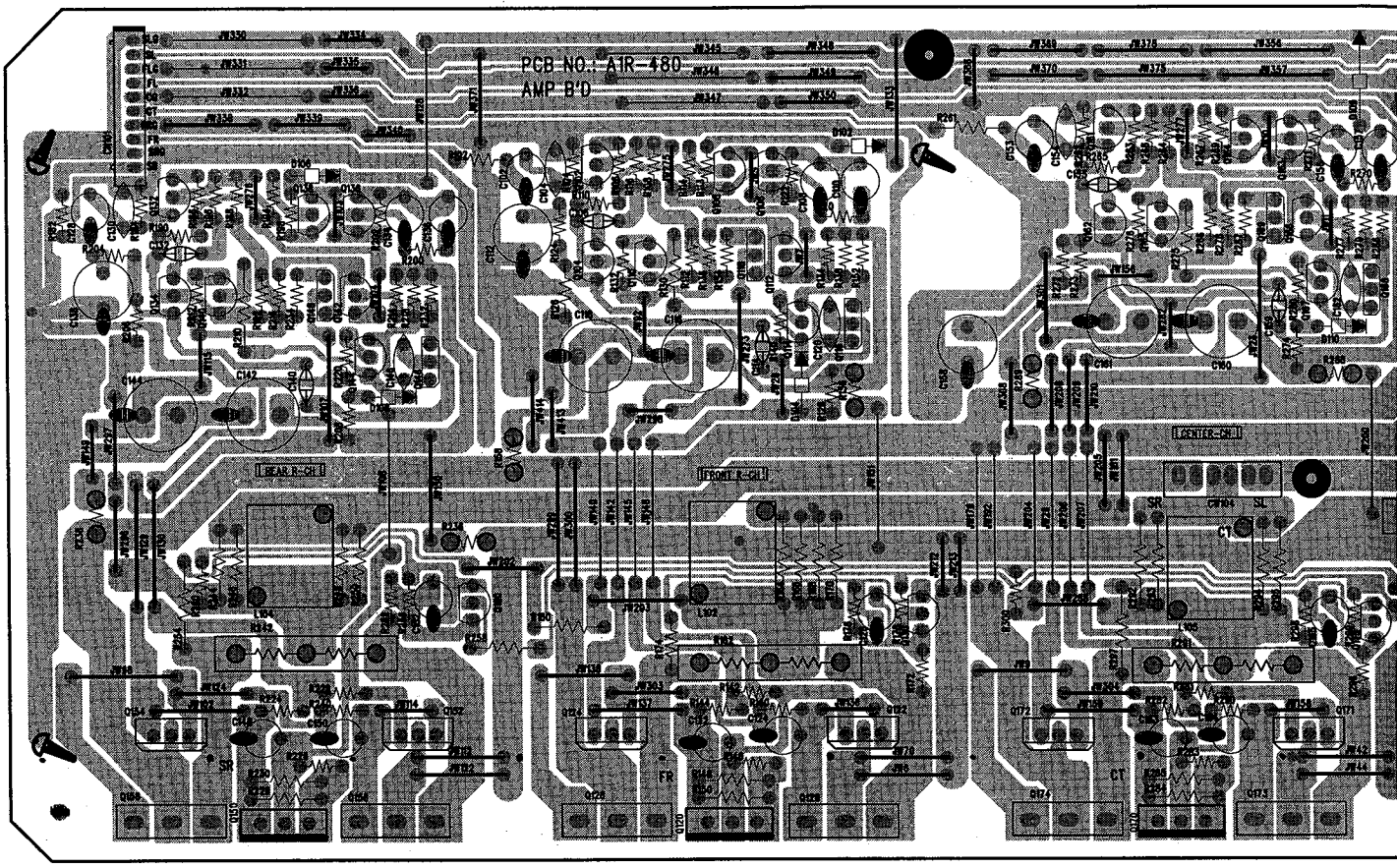

INPUT

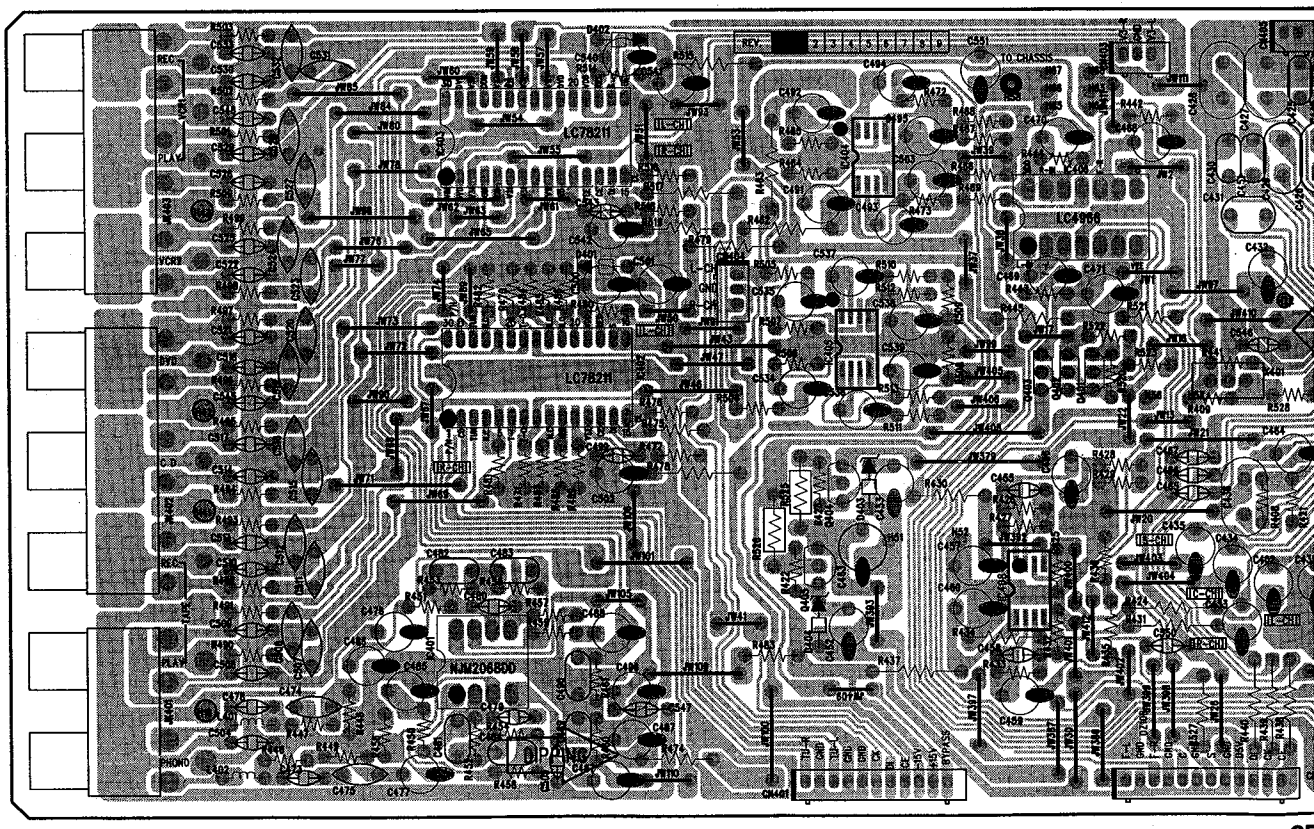

AMP P.C BOARD

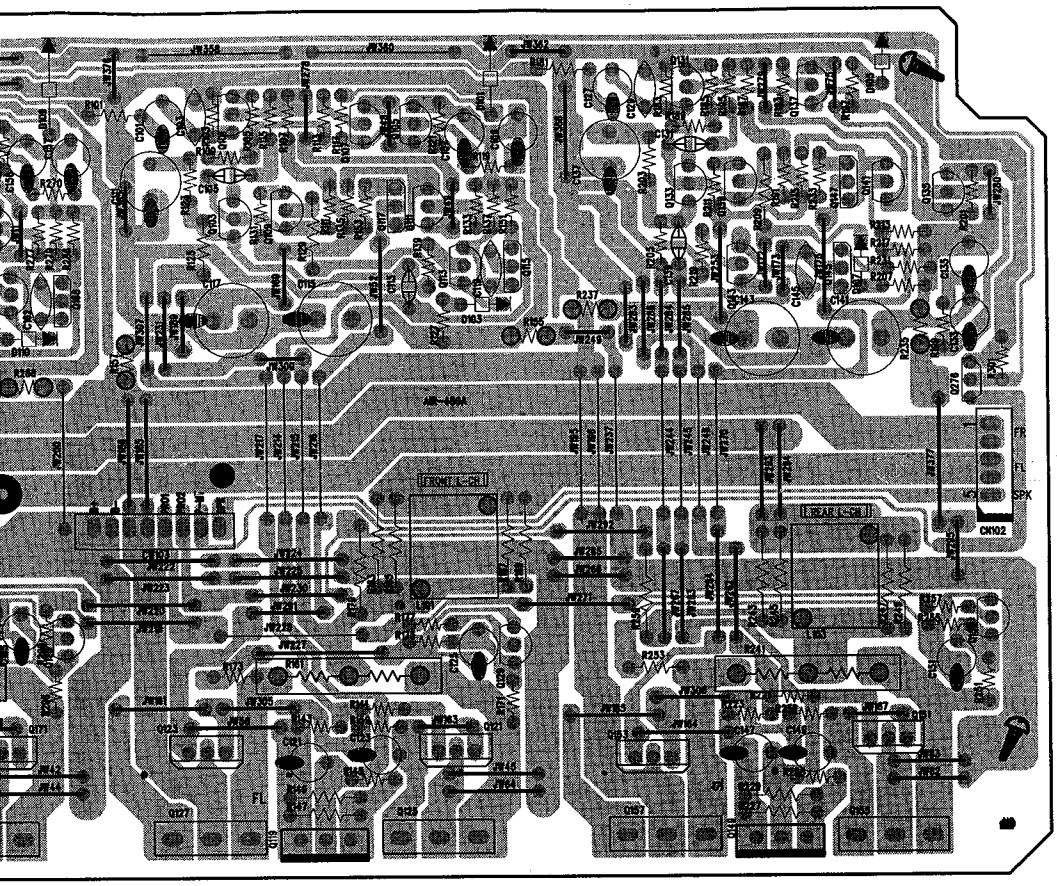

INPUT & PRO-LOGIC P.C.BOARD

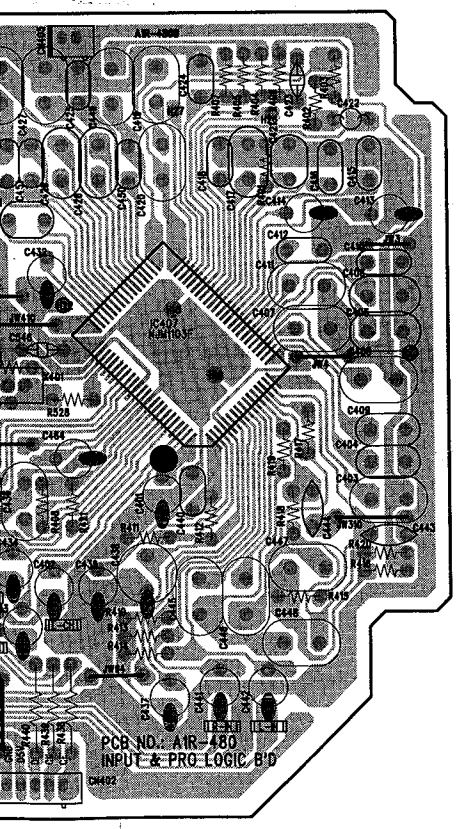

VIDEO P.C BOARD

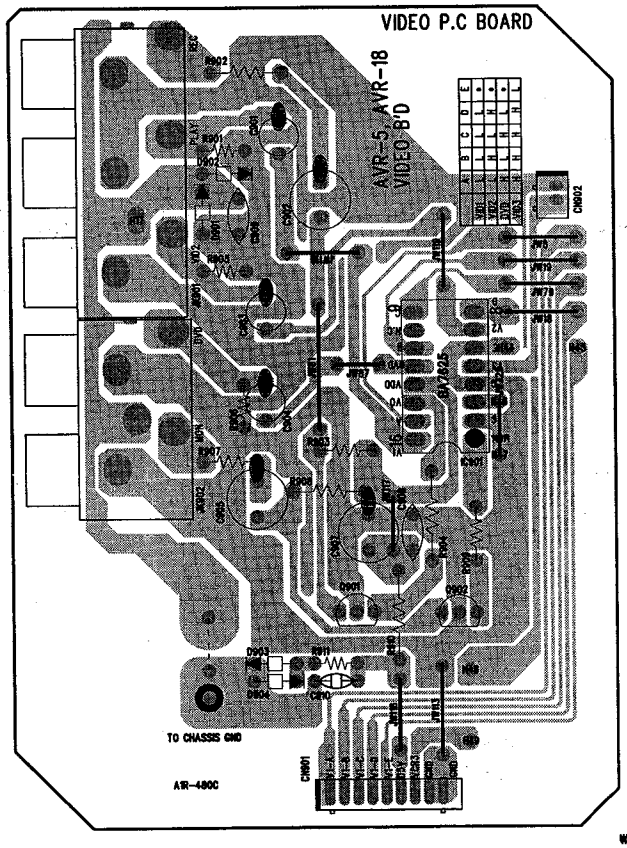

PRE/IN OUT P.C BOARD

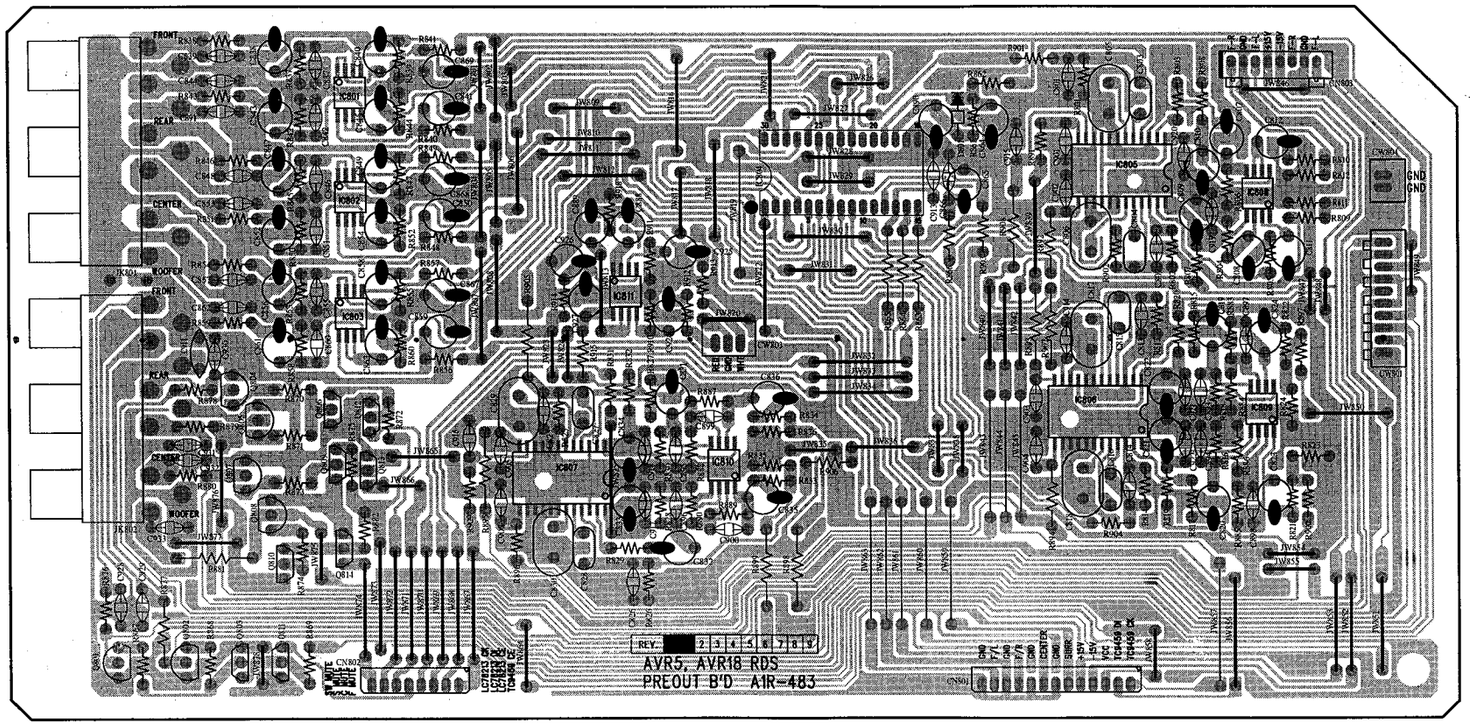

P. C. BOARD

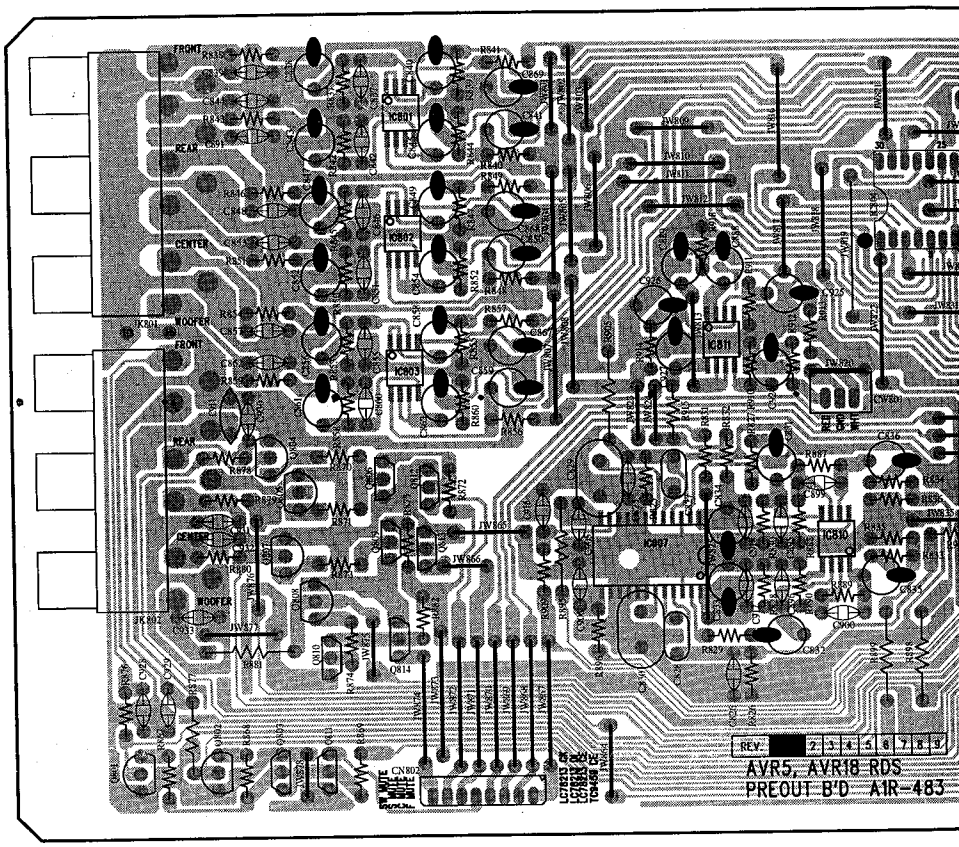

PRE/IN OUT P.C BOARD

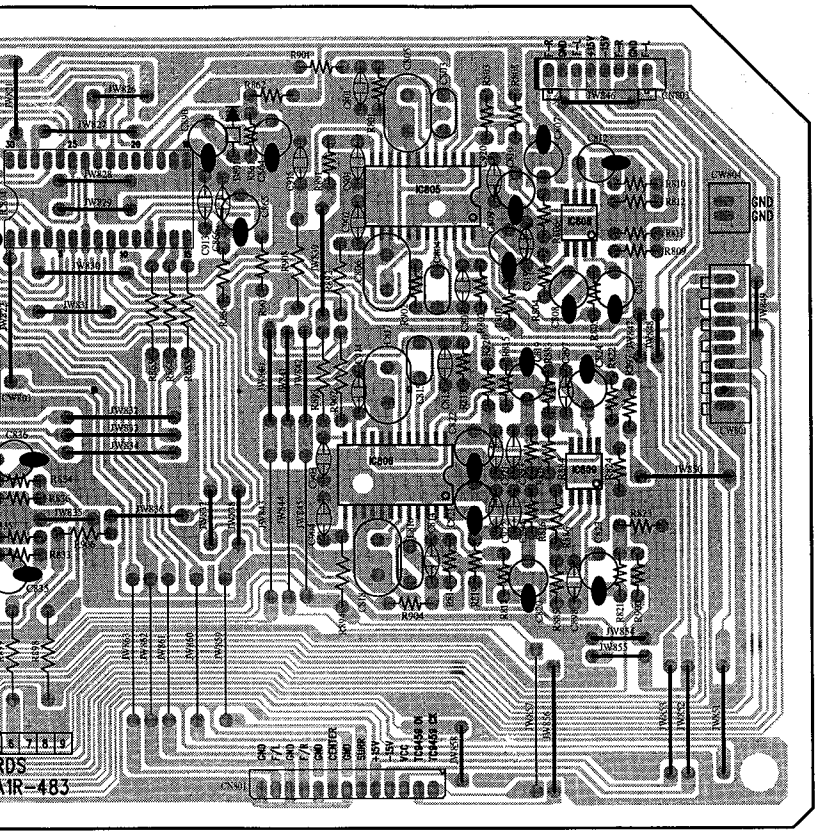

FRONT P.C BOARD

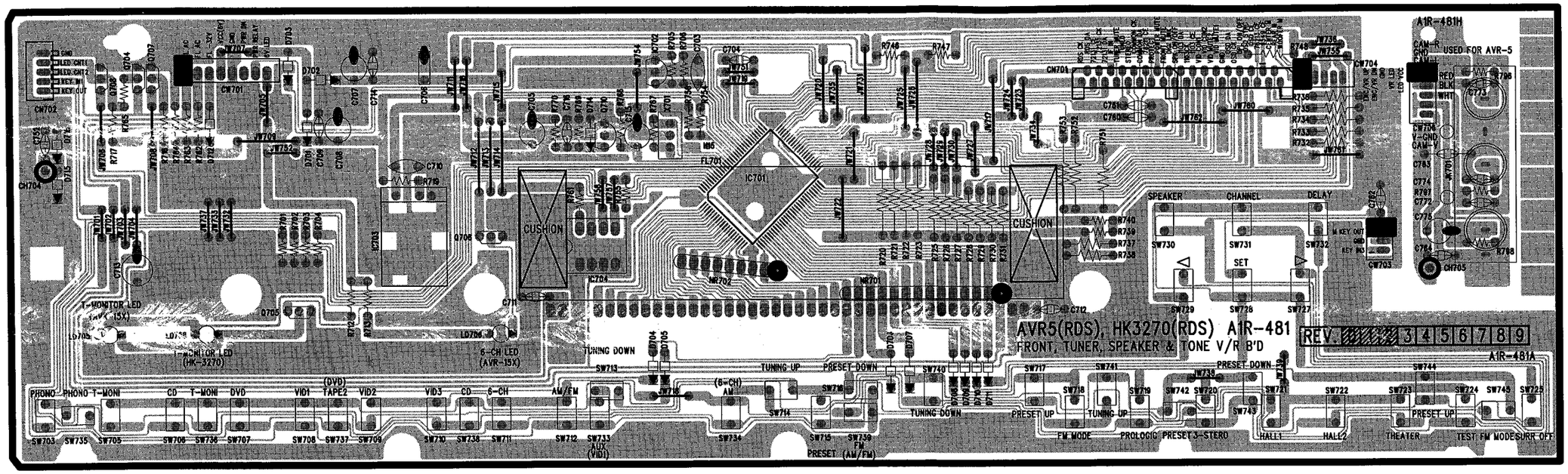

TUNER P.C BOARD

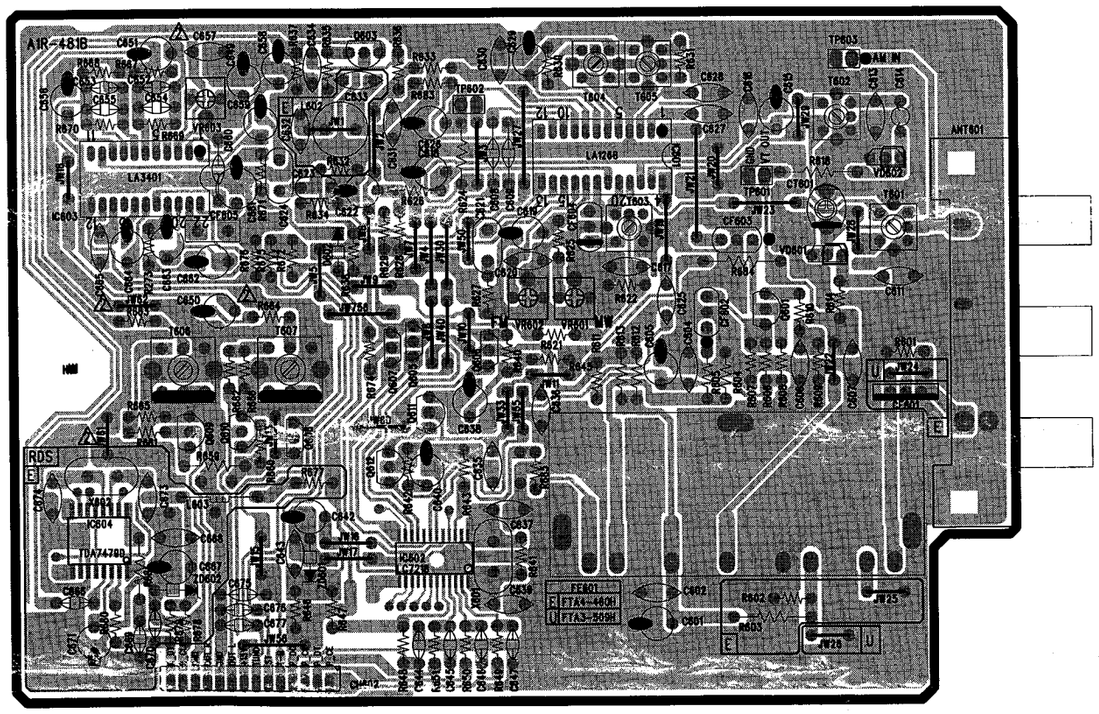

HEADPHONE/MUTE/TONE/ENCODER VOLUME/STANDBY P.C BOARD

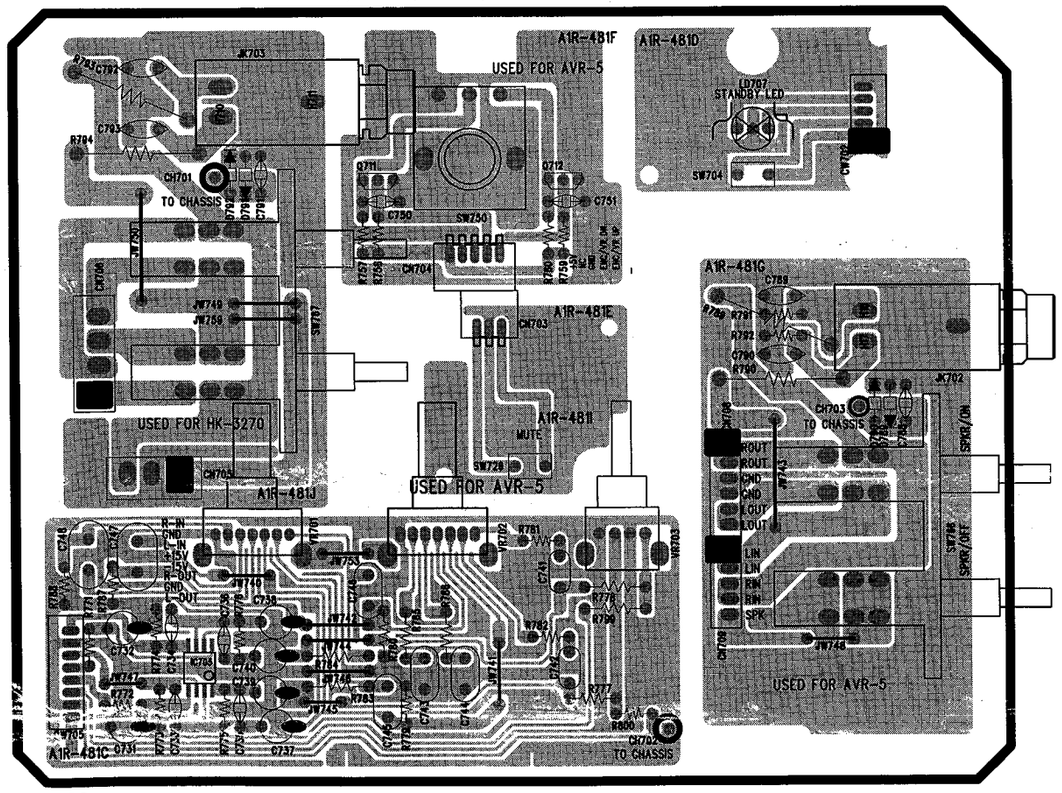

P. C. BOARD

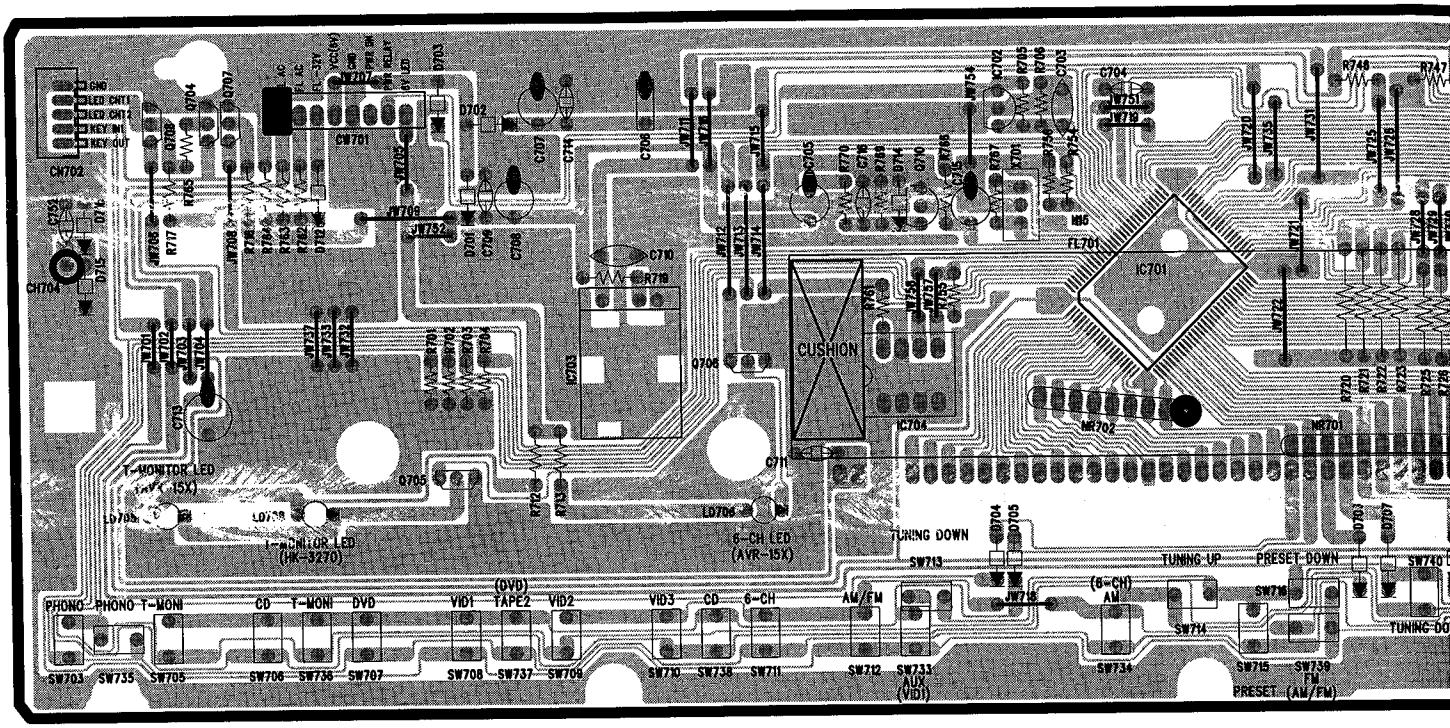

TUNER P.C BOARD

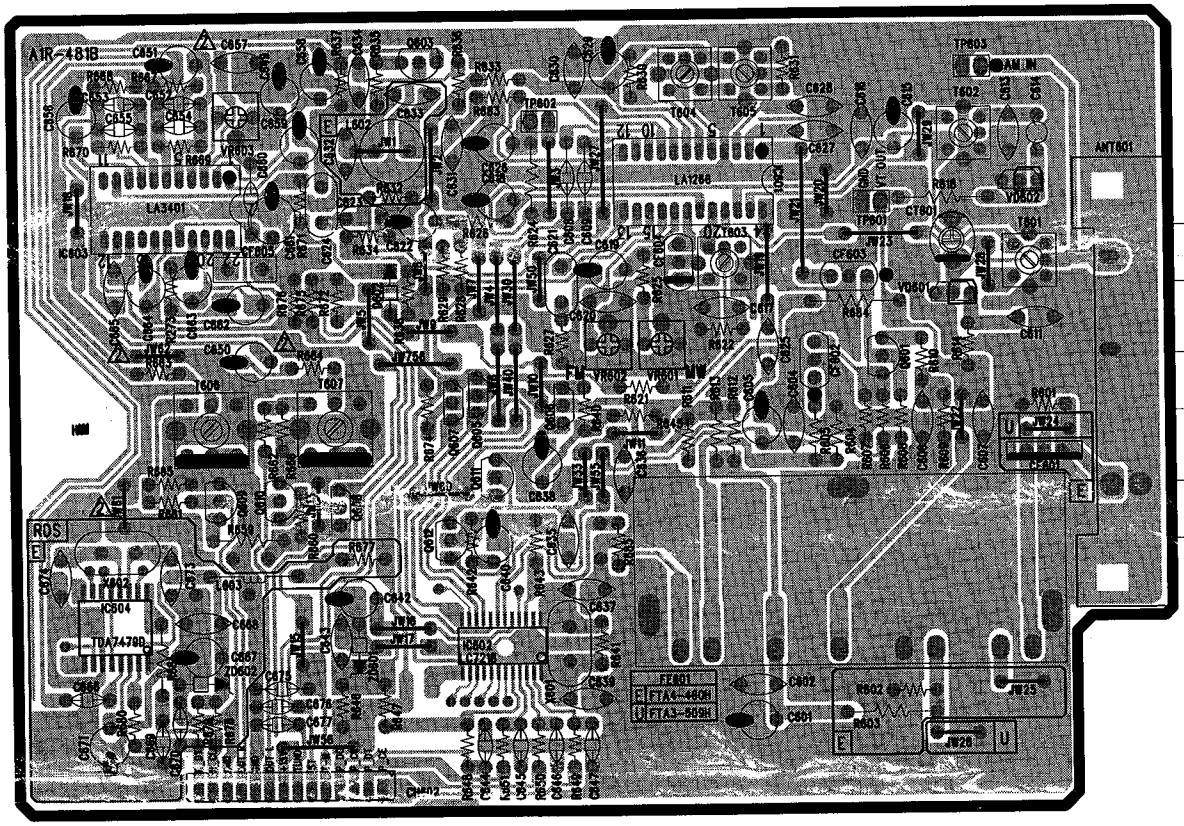

FRONT P.C BOARD

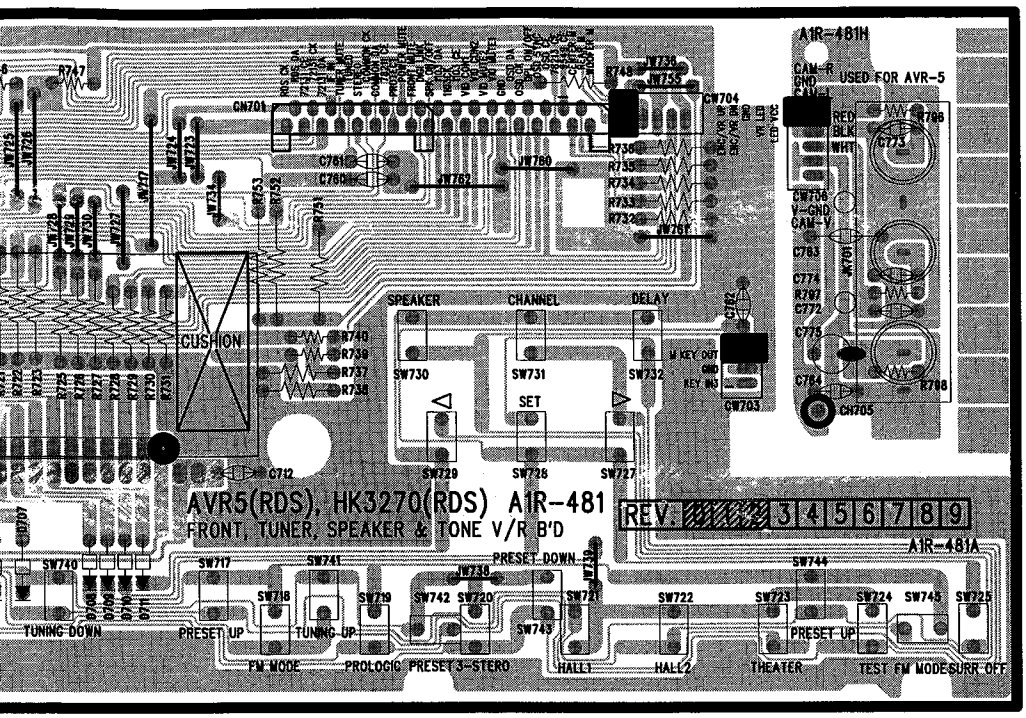

HEADPHONE/MUTE/TONE/ENCODER VOLUME/STANDBY P.C BOARD

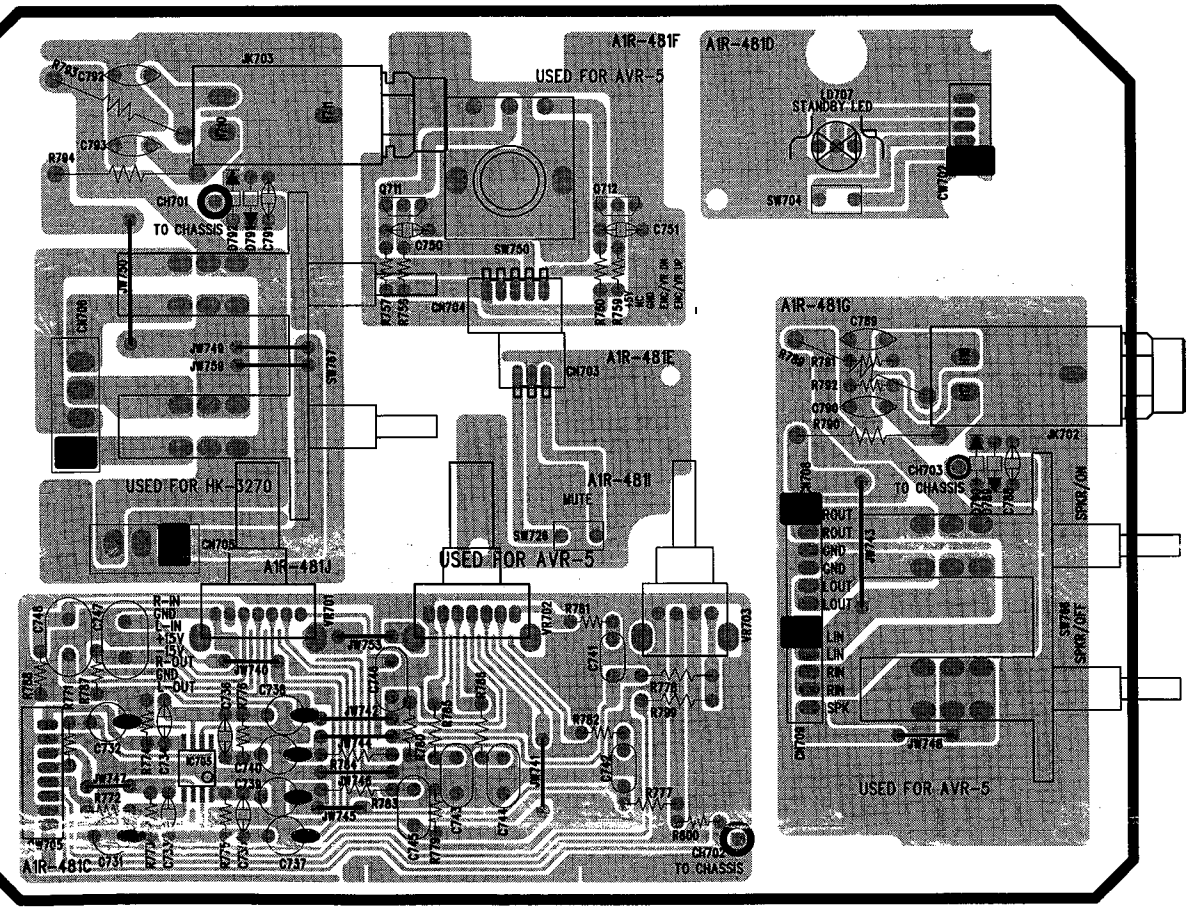

SCHEMATIC DIAGRAM

AMP BOARD

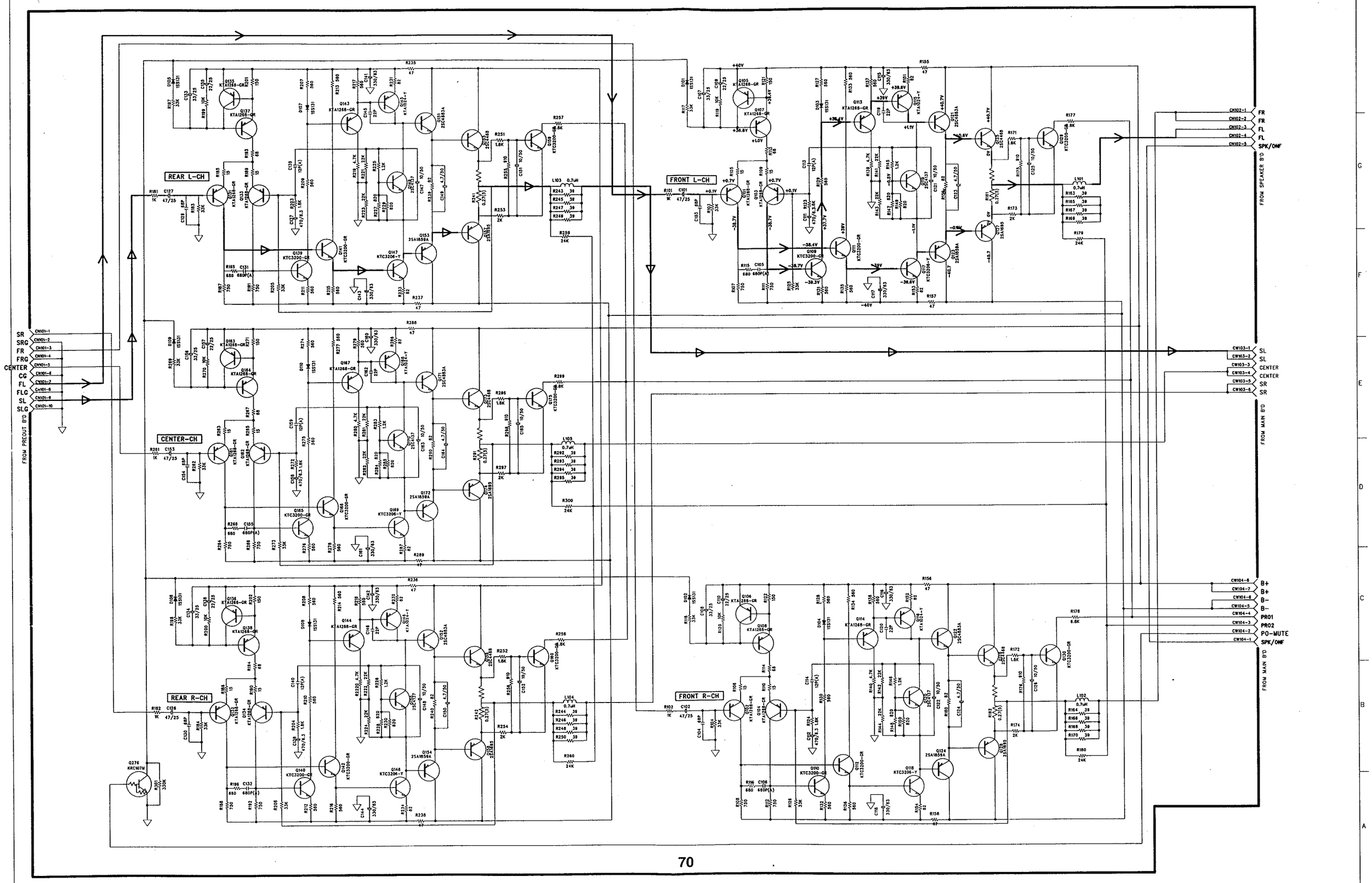

SCHEMATIC DIAGRAM

AMP BOARD

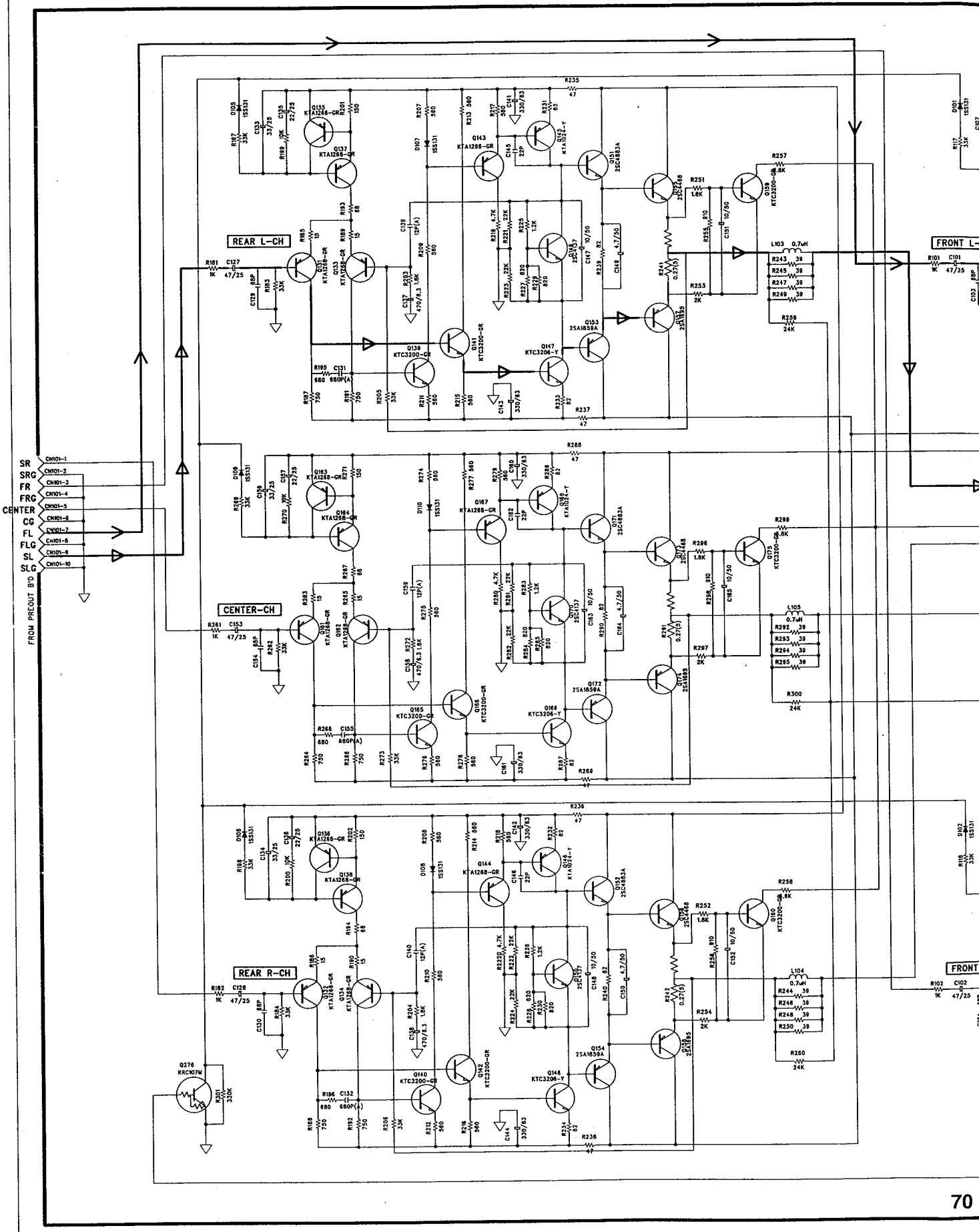

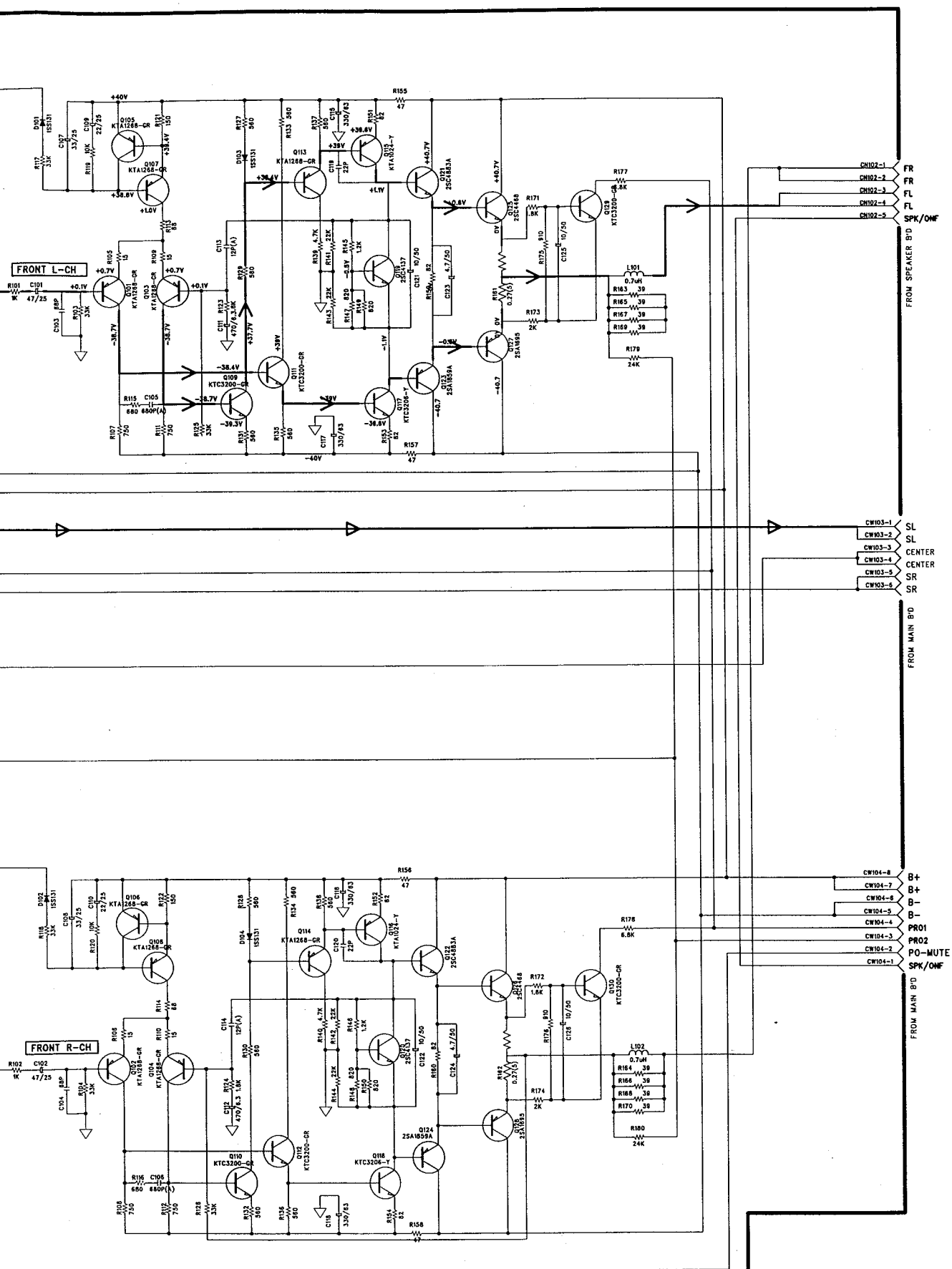
FRONT L-CH
FRONT R-CH
FROM SPEAKER B'D
FROM MAIN B'D
FROM MAIN B'D
CN102-1 FR
CN102-2 FR
CN102-3 FL
CN102-4 FL
CN102-5 SPK/OHF
CN103-1 SL
CN103-2 SL
CN103-3 CENTER
CN103-4 CENTER
CN103-5 SR
CN103-6 SR
CN104-8 B+
CN104-7 B+
CN104-6 B-
CN104-5 B-
CN104-4 PRO1
CN104-3 PRO2
CN104-2 PO-MUTE
CN104-1 SPK/OHF

SCHEMATIC DIAGRAM

FRONT BOARD

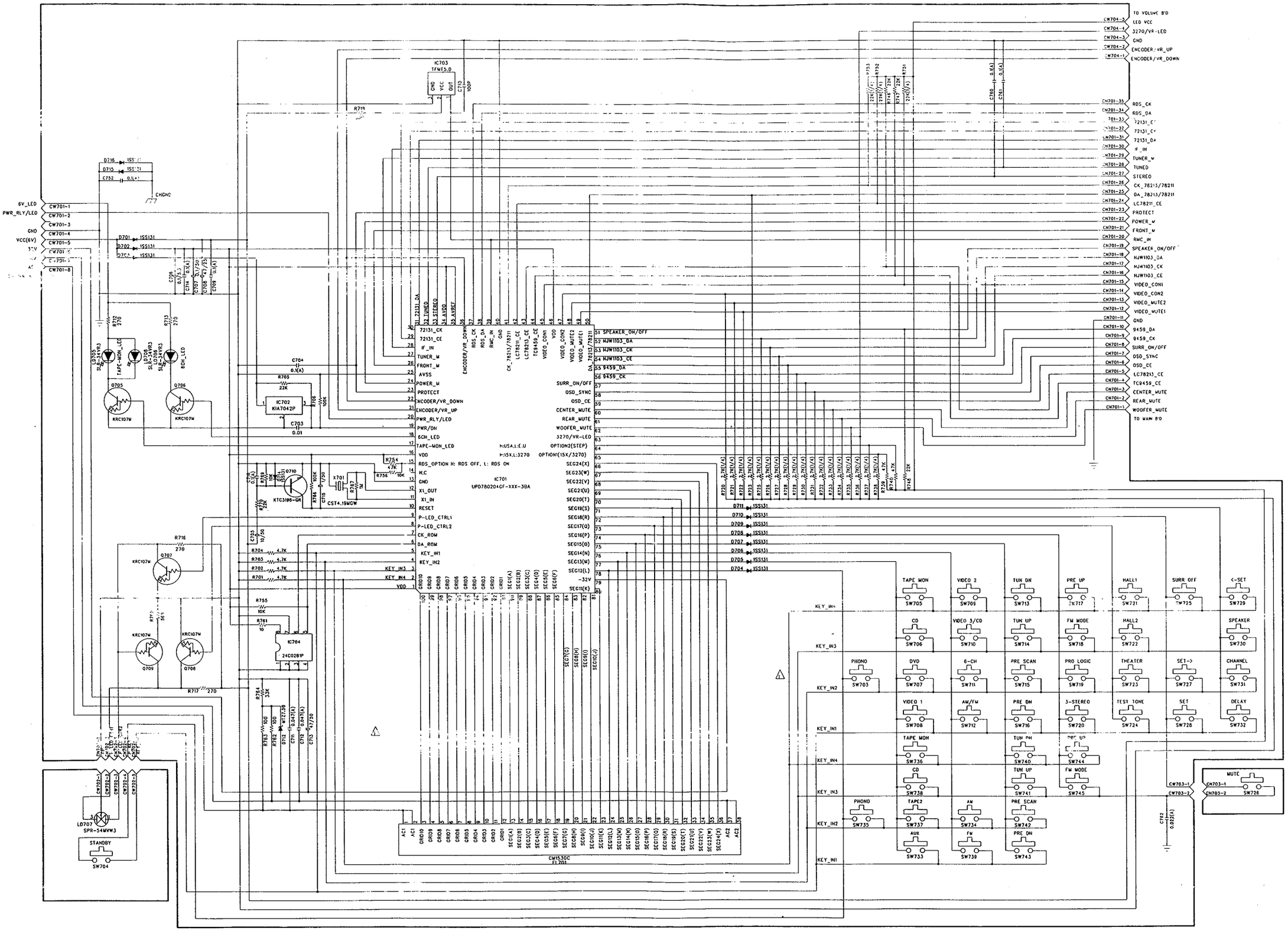

SCHEMATIC DIAGRAM

FRONT BOARD

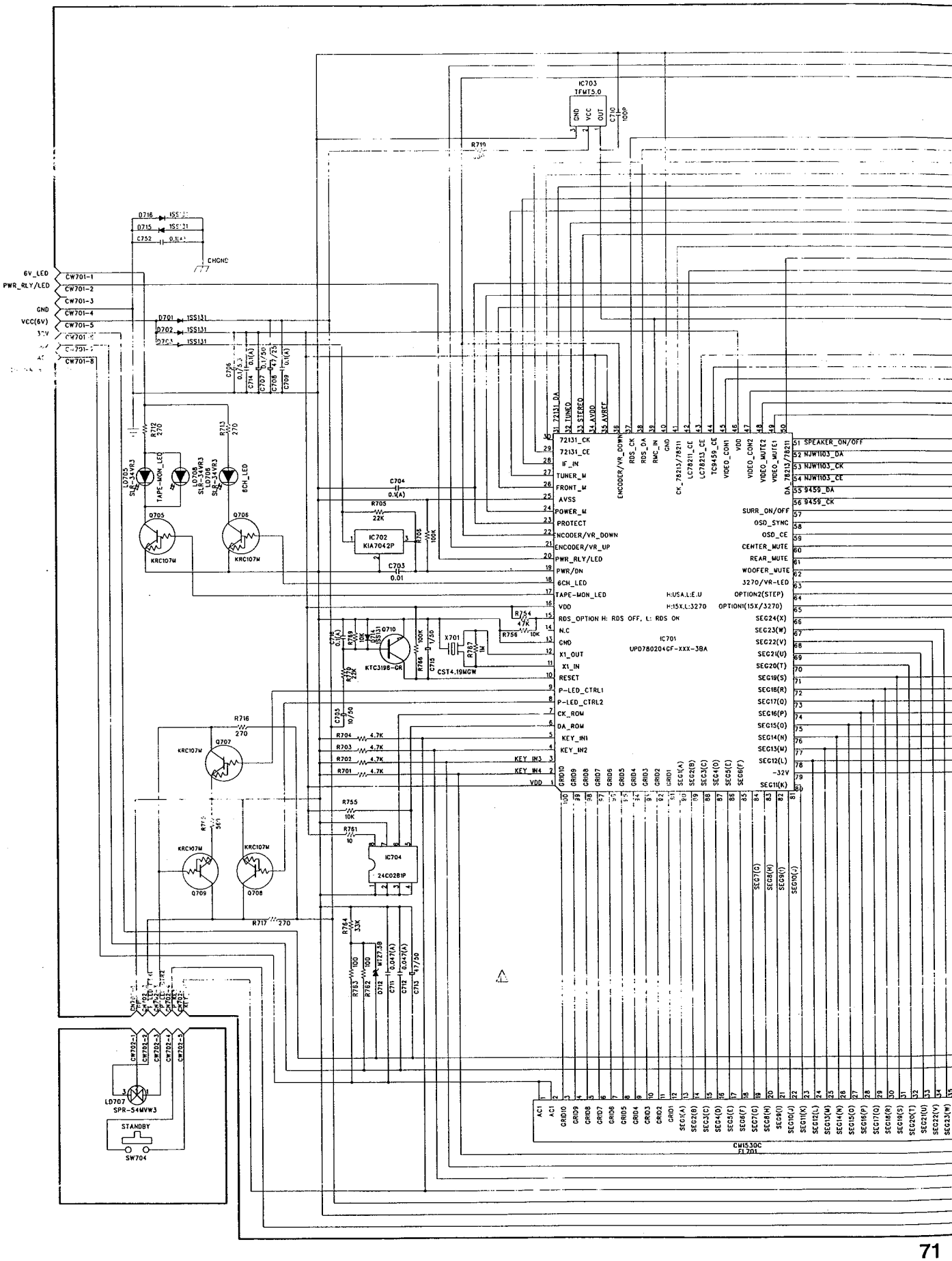

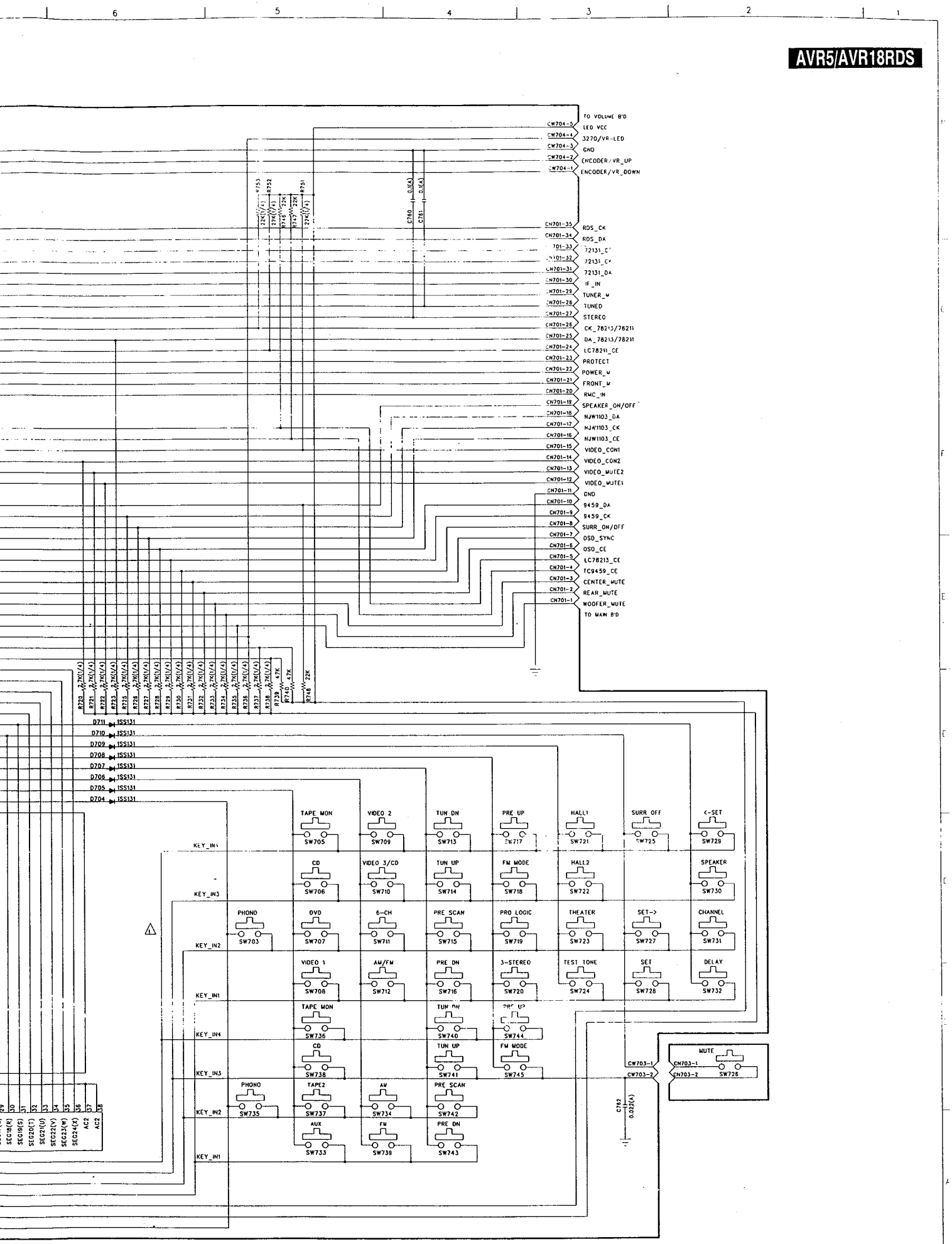
TO VOLUME B'D
LED VCC
3270/VR-LED
GND
ENCODER/VR_UP
ENCODER/VR_DOWN
RDS_CK
RDS_DA
72131_CE
72131_CK
72131_DA
IF_IN
TUNER_W
TUNED
STEREO
CK_78213/78211
DA_78213/78211
LC78211_CE
PROTECT
POWER_W
FRONT_W
RMC_IN
SPEAKER_ON/OFF
NJW1103_DA
NJW1103_CK
NJW1103_CE
VIDEO_CON1
VIDEO_CON2
VIDEO_MUTE2
VIDEO_MUTE1
GND
9459_DA
9459_CK
SURR_ON/OFF
OSD_SYNC
OSD_CE
LC78213_CE
TC9459_CE
CENTER_MUTE
REAR_MUTE
WOOFER_MUTE
TO MAIN B'D
KEY_IN4
KEY_IN3
KEY_IN2
KEY_IN1
TAPE MON
VIDEO 2
TUN DN
PRE UP
HALL1
SURR OFF
<-SET
CD
VIDEO 3/CD
TUN UP
FM MODE
HALL2
SPEAKER
PHONO
DVD
6-CH
PRE SCAN
PRO LOGIC
THEATER
SET->
CHANNEL
VIDEO 1
AM/FM
PRE DN
3-STEREO
TEST TONE
SET
DELAY
TAPE2
AW
AUX
FM
MUTE

SCHEMATIC DIAGRAM

TUNER BOARD

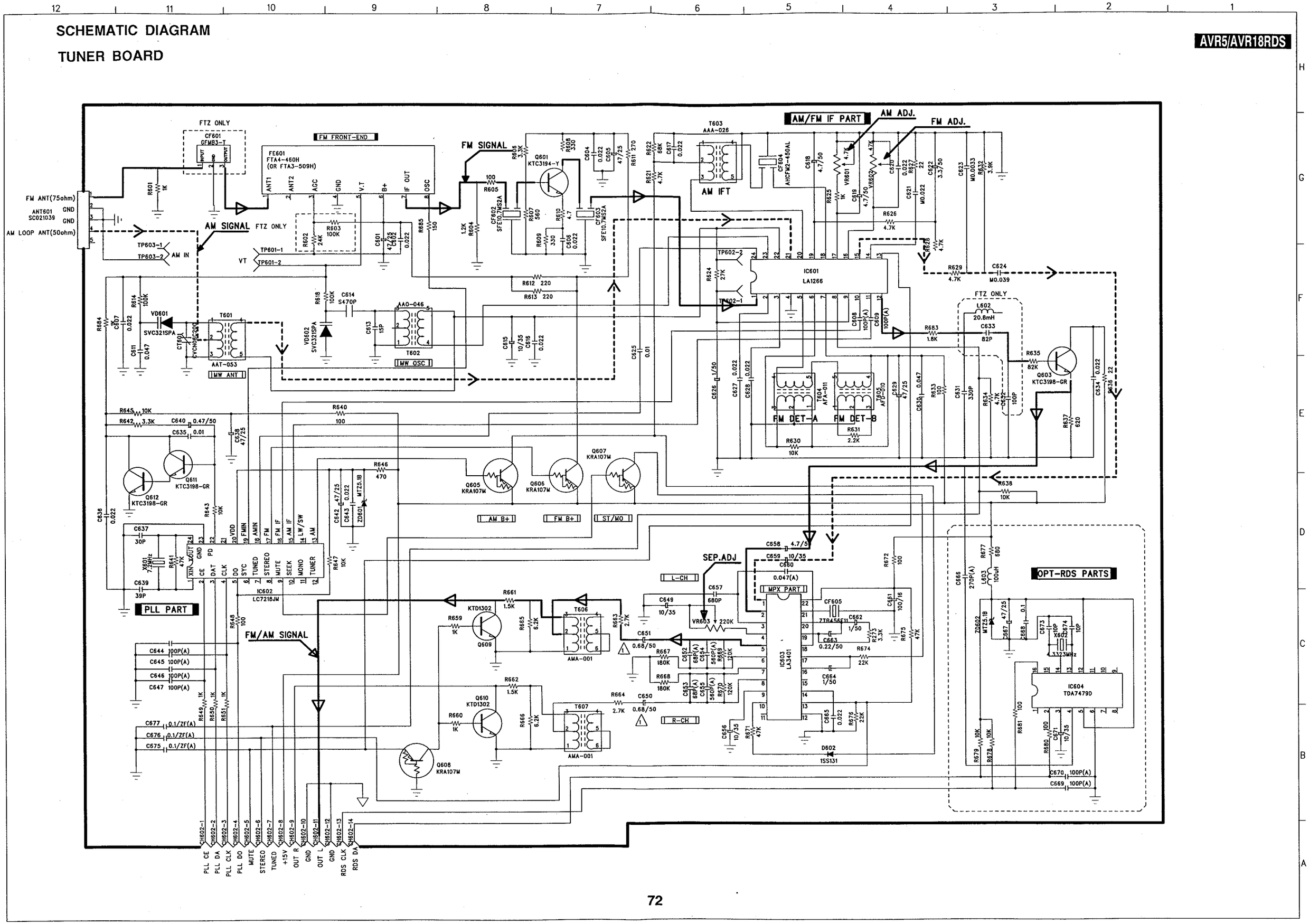

SCHEMATIC DIAGRAM

TUNER BOARD

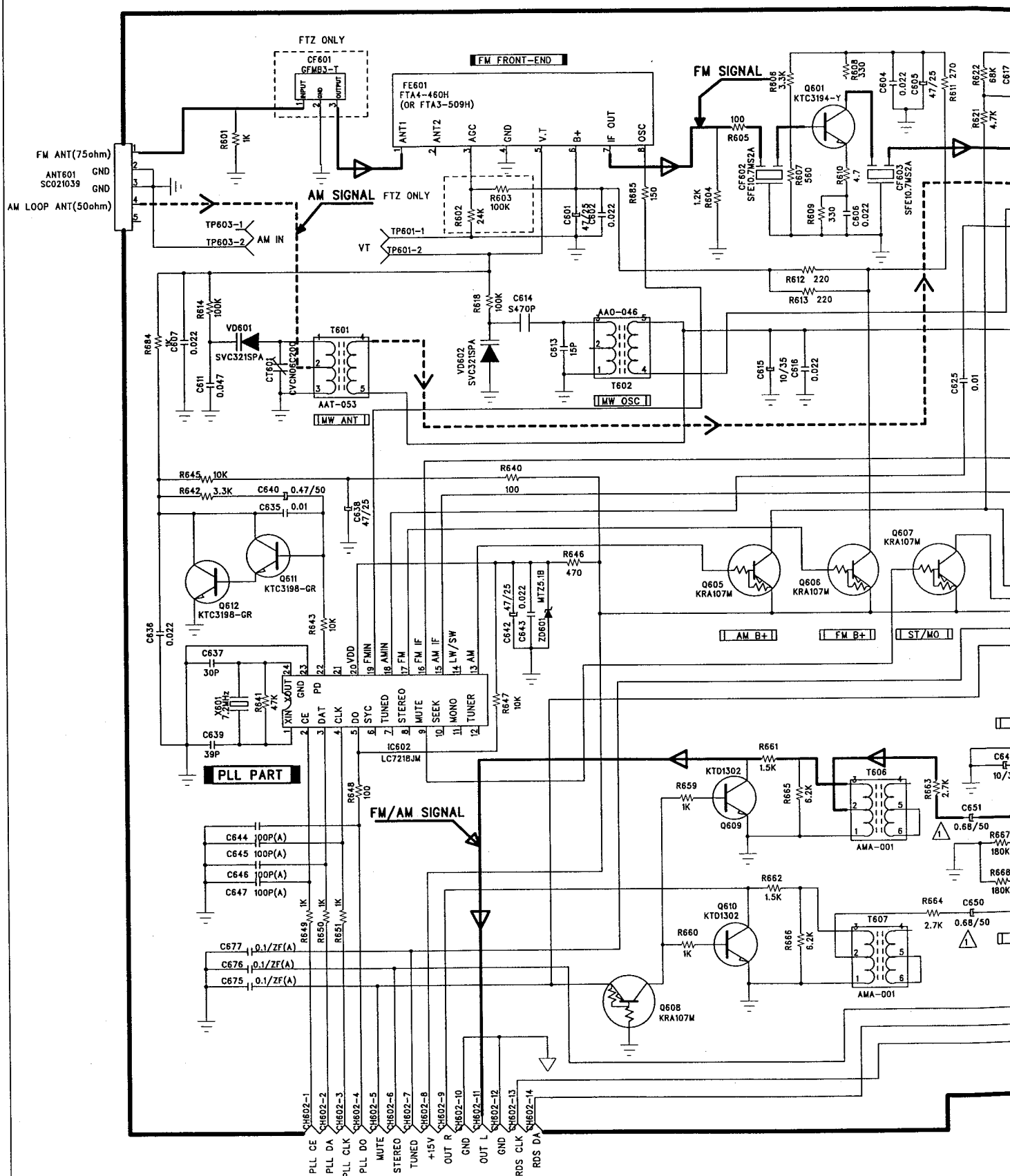

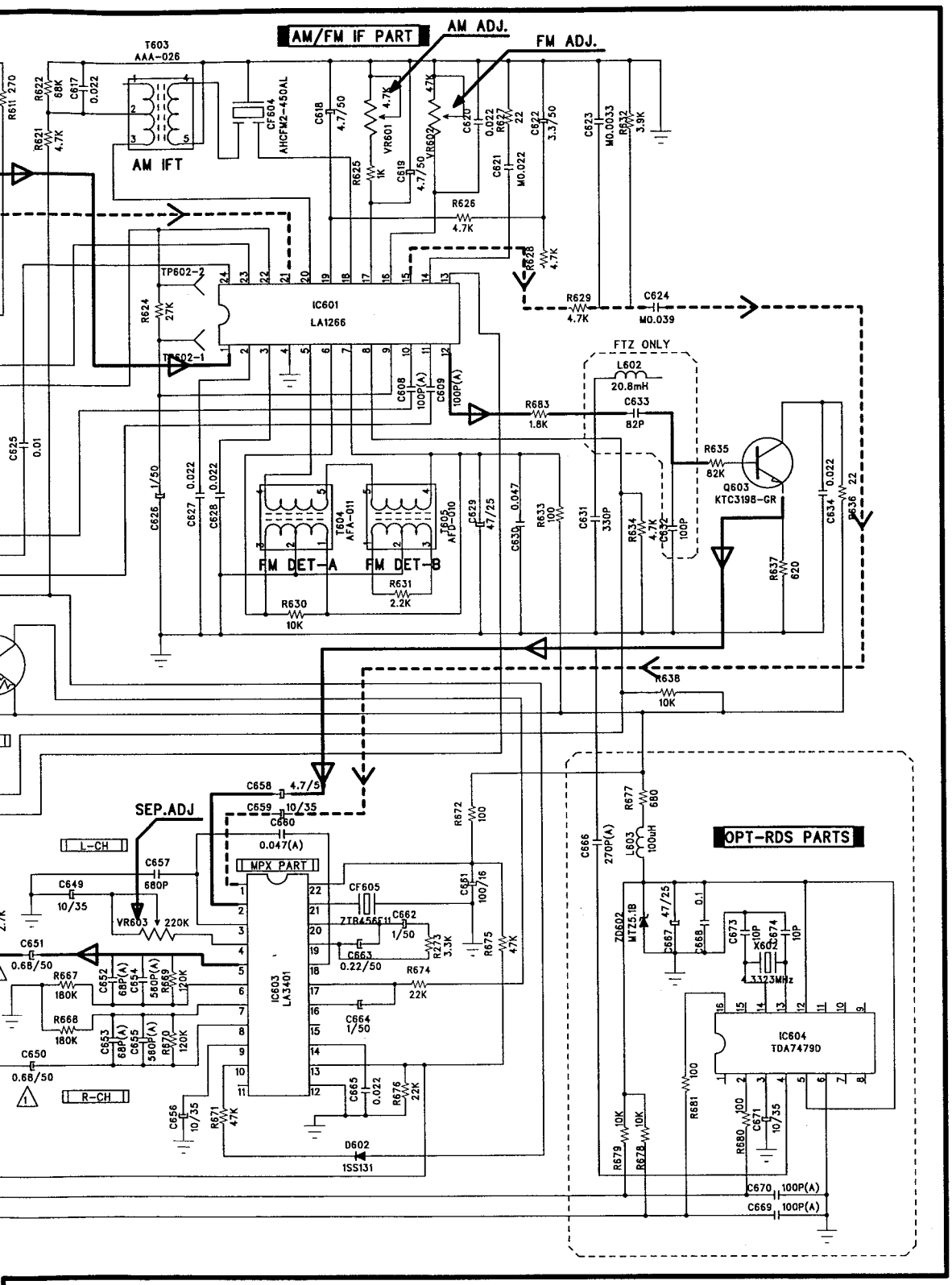
AM/FM IF PART
AM ADJ.
FM ADJ.
T603
AAA-026
AM IFT
CF604
AHCFM2-450AL
IC601
LA1266
TP602-2
TP602-1
FTZ ONLY
L602
20.8mH
Q603
KTC3198-GR
FM DET-A
FM DET-B
T604
AFA-011
T605
AFD-010
SEP.ADJ
L-CH
R-CH
MPX PART
IC603
LA3401
CF605
ZTB456E11
VR603
220K
D602
1SS131
OPT-RDS PARTS
IC604
TDA7479D
X602
4.3323MHz
ZD602
MTZ5.1B
L603
100uH

SCHEMATIC DIAGRAM
INPUT & VIDEO BOARD

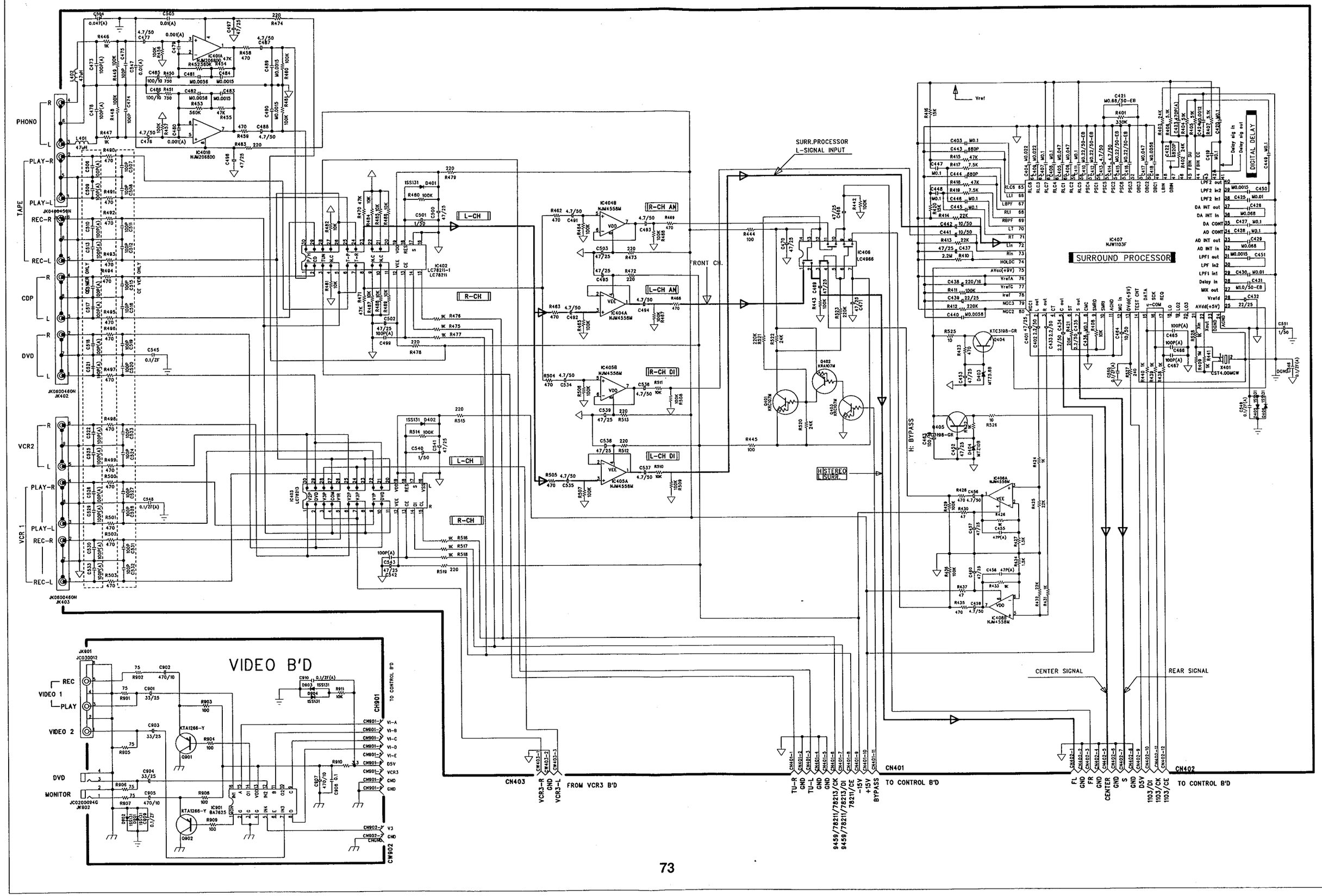

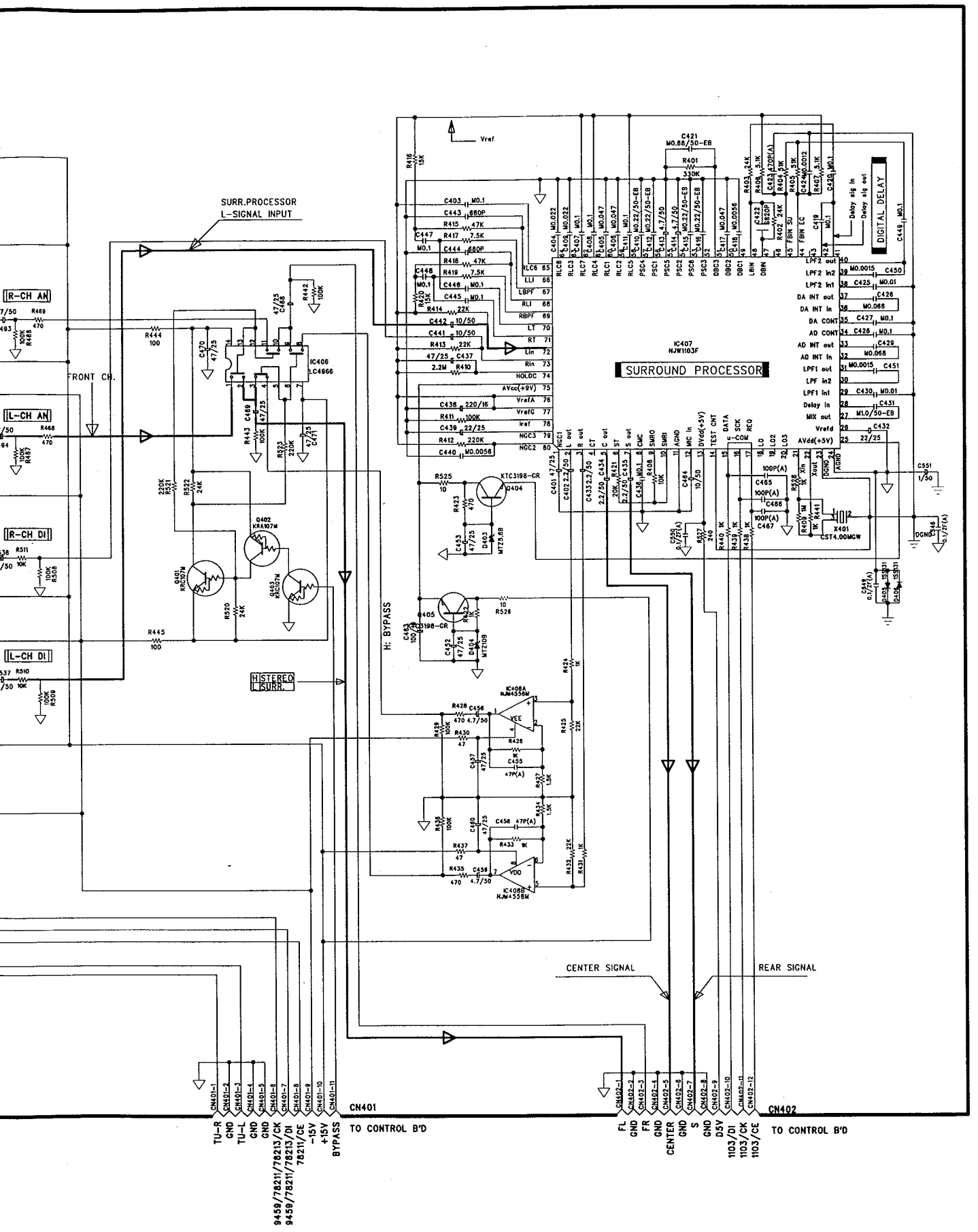
SURR.PROCESSOR
L-SIGNAL INPUT
R-CH AN
L-CH AN
R-CH DI
L-CH DI
FRONT CH.
IC406
LC4966
Q402
KRA107M
Q401
KRC107M
Q403
KRC107M
H: BYPASS
H STEREO
L SURR.
Vref
IC407
NJW1103F
SURROUND PROCESSOR
DIGITAL DELAY
Delay sig in
Delay sig out
Q404
KTC3198-GR
Q405
KTC3198-GR
IC408A
NJM4558M
IC408B
NJM4558M
X401
CST4.00MGW
CENTER SIGNAL
REAR SIGNAL
CN401
TO CONTROL B'D
TU-R
GND
TU-L
GND
GND
9459/78211/78213/CK
9459/78211/78213/DI
78211/CE
-15V
+15V
BYPASS
CN402
TO CONTROL B'D
FL
GND
FR
GND
CENTER
GND
S
GND
D5V
1103/DI
1103/CK
1103/CE

SCHEMATIC DIAGRAM
INPUT & VIDEO BOARD

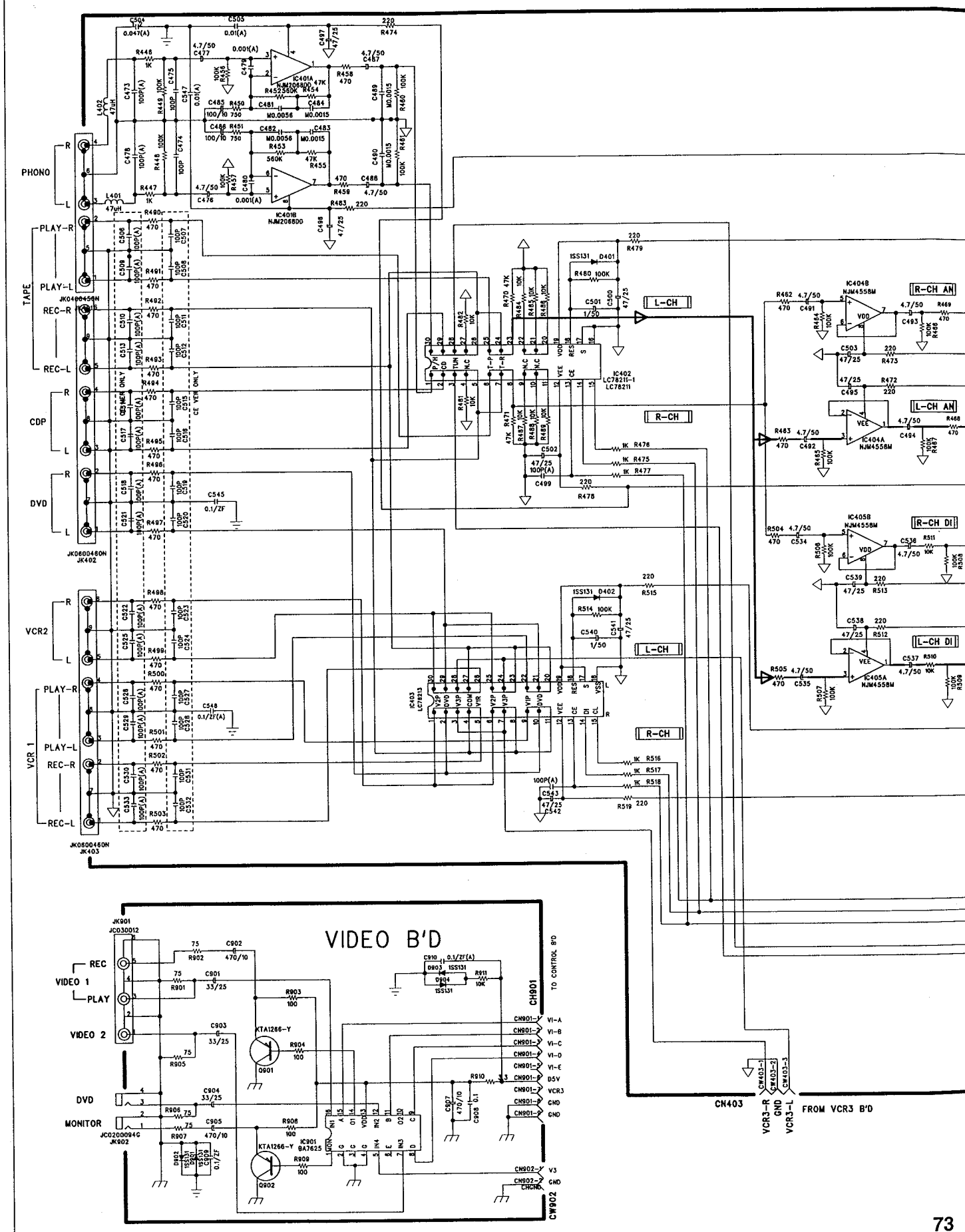

TONE BOARD

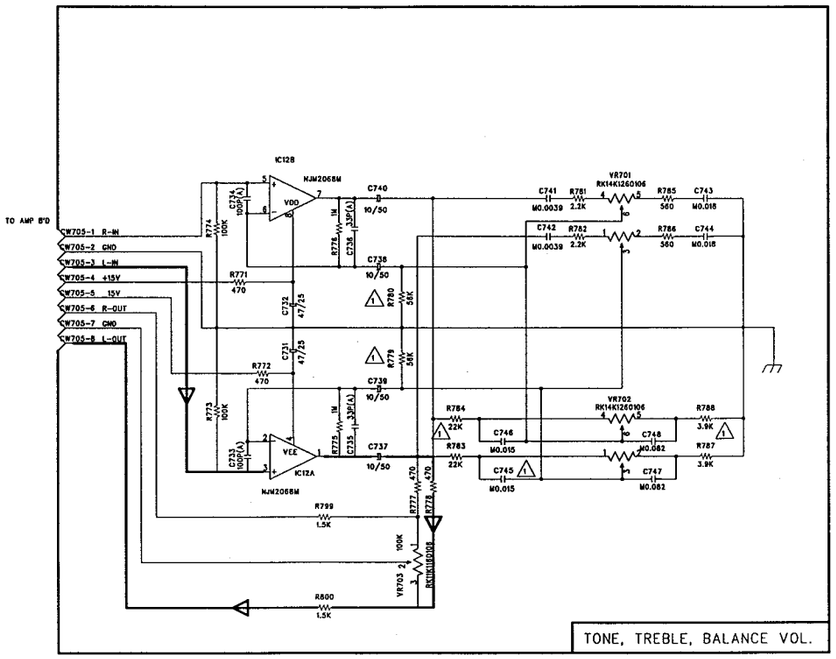

HEAD PHONE BOARD

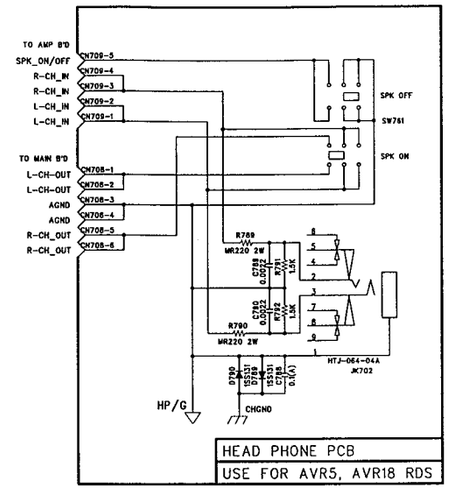

*DESTINATION OPTION

LOC. NO.	USA	EUROPE
R791, R792	X	O
C771 - C774 C789, C790	X	O

ENCODER VOL BOARD

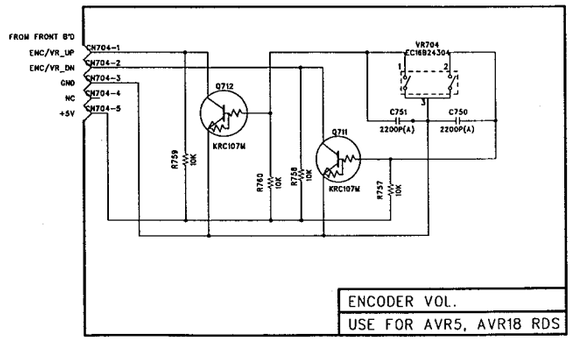

VIDEO 3 INPUT BOARD

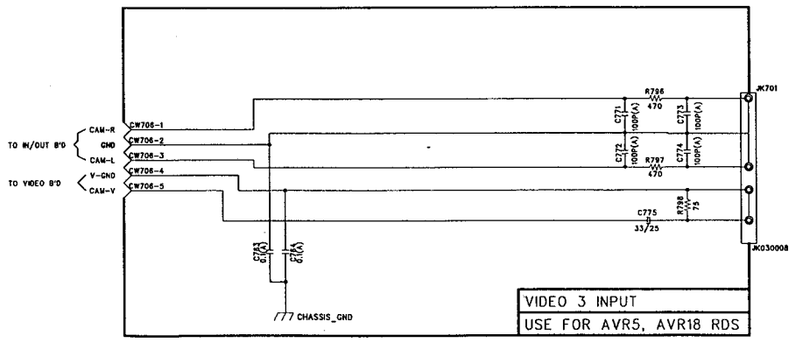

SCHEMATIC DIAGRAM

TONE BOARD

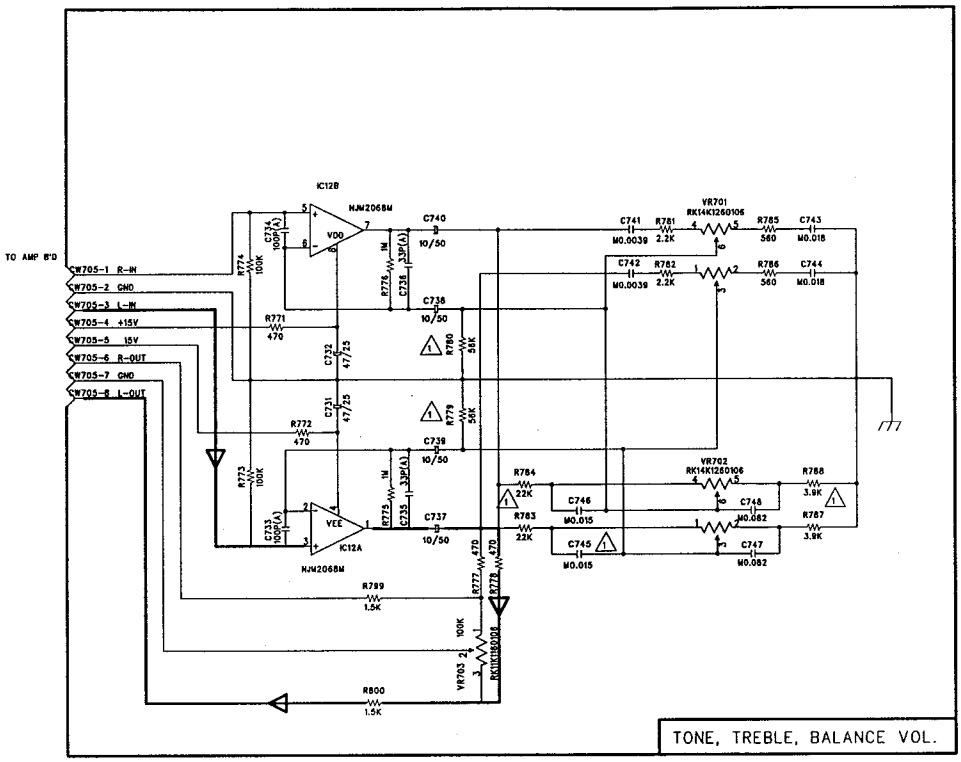

HEAD

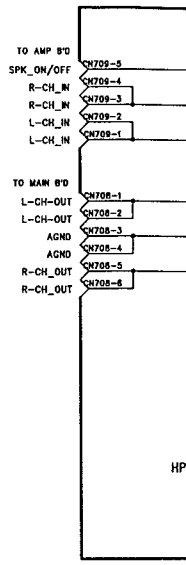

ENCODER VOL BOARD

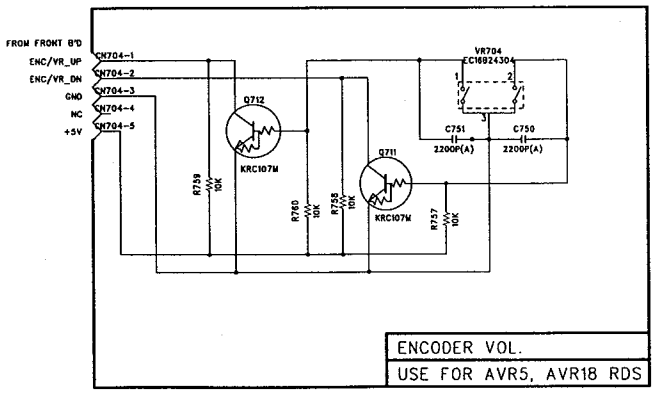

VIDEO

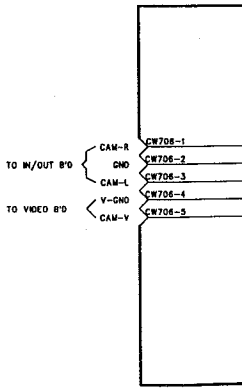

HEAD PHONE BOARD

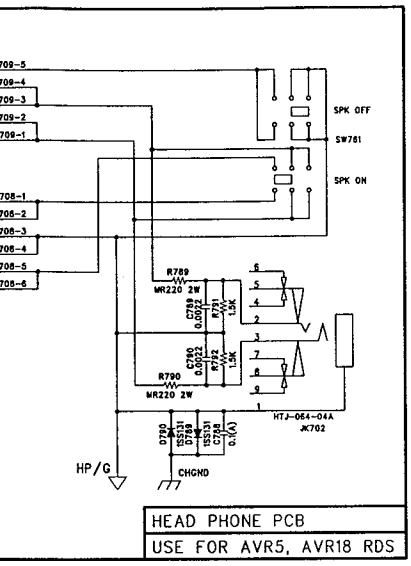

*DESTINATION OPTION

LOC. NO.	USA	EUROPE
R791, R792	X	O
C771 – C774 C789, C790	X	O

VIDEO 3 INPUT BOARD

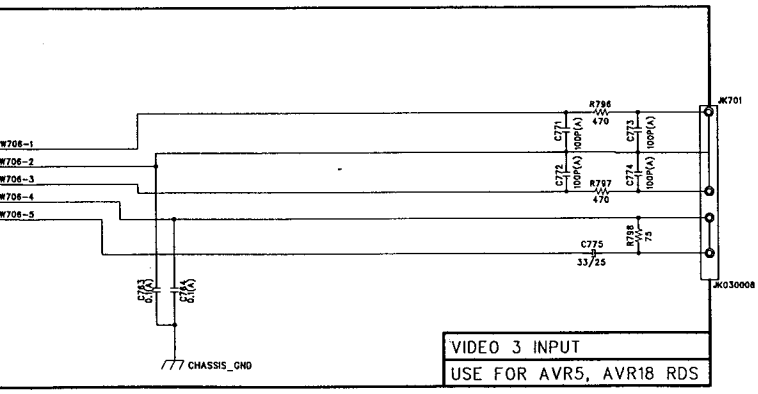

SCHEMATIC DIAGRAM

MAIN BOARD

AVR5/AVR18RDS

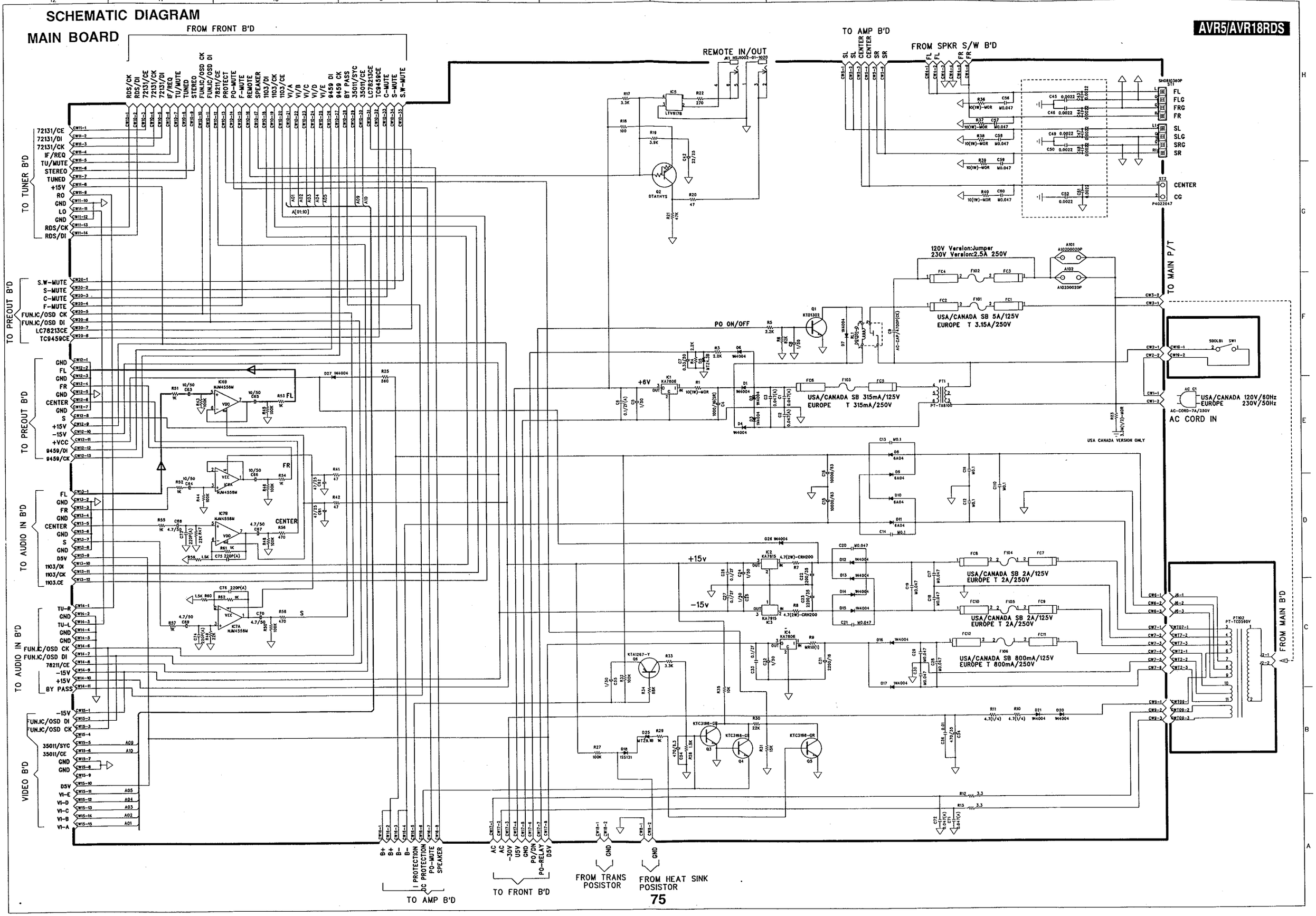

SCHEMATIC DIAGRAM

MAIN BOARD

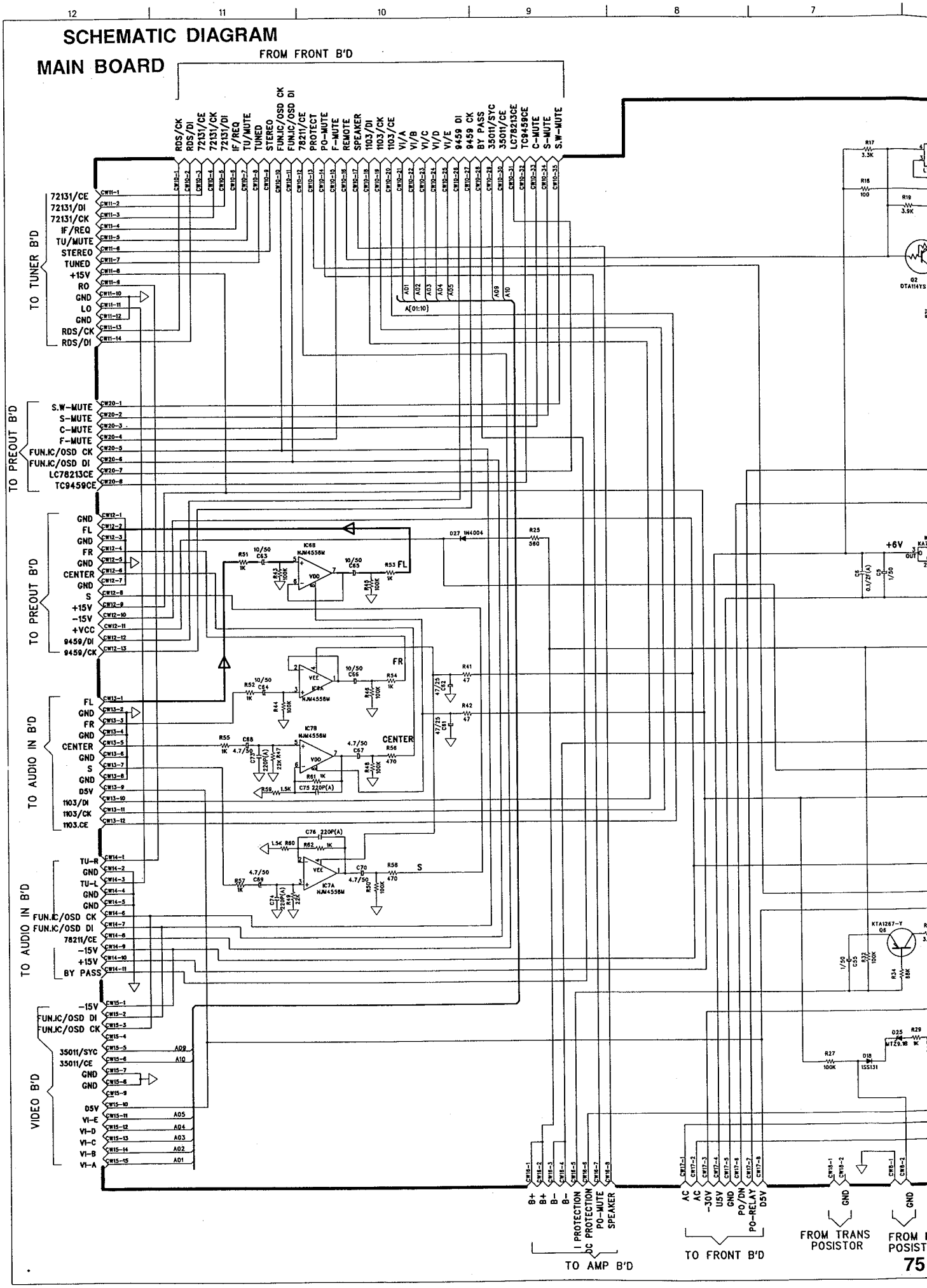

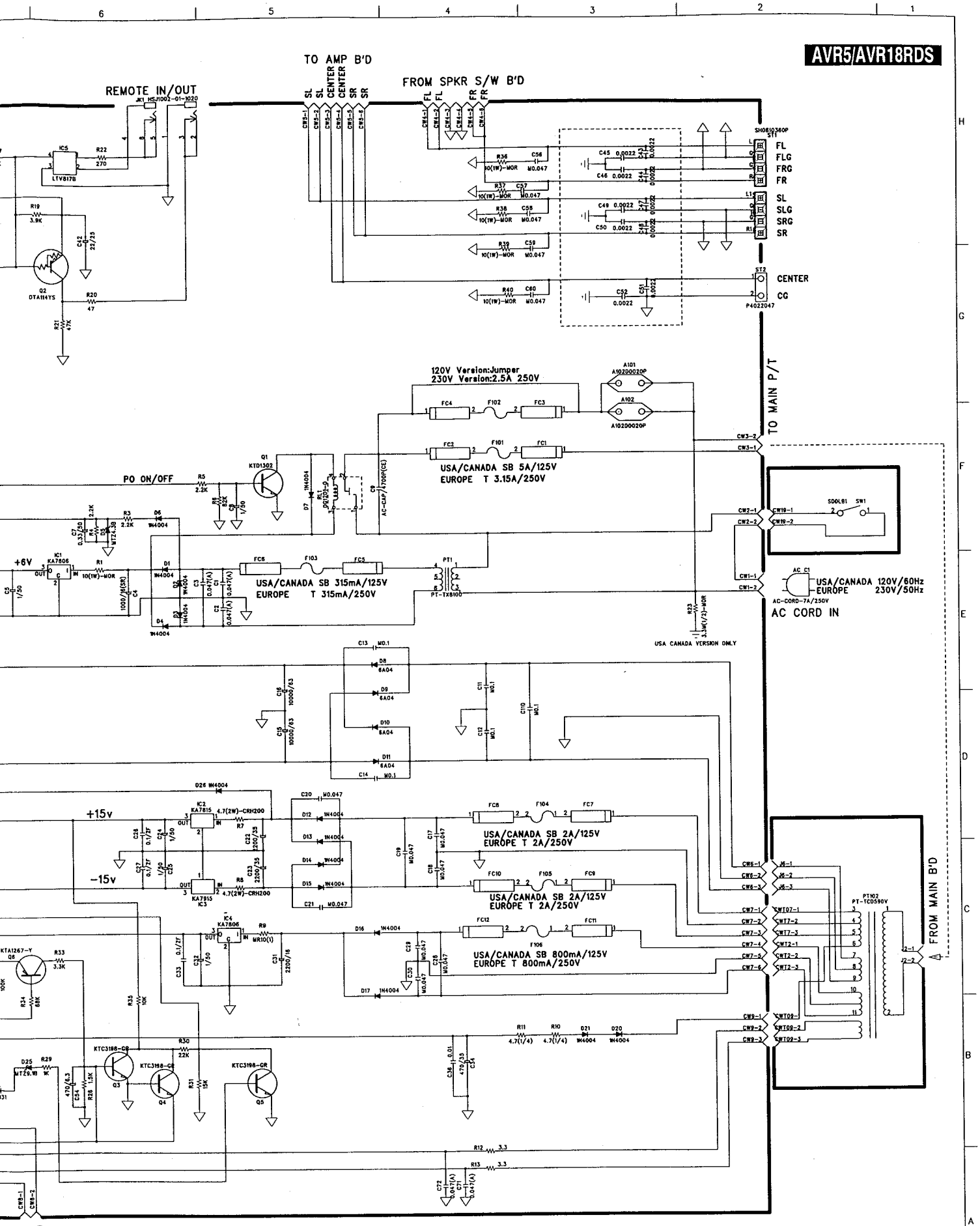
TO AMP B'D
SL SL CENTER CENTER SR SR
FROM SPKR S/W B'D
FL FL FR FR
REMOTE IN/OUT
JK1 HSJ1002-01-1020
IC5 LTV817B
R22 270
R19 3.9K
C42 22/25
Q2 DTA114YS
R20 47
R21 47K
R36 10(1W)-MOR C56 M0.047
R37 10(1W)-MOR C57 M0.047
R38 10(1W)-MOR C58 M0.047
R39 10(1W)-MOR C59 M0.047
R40 10(1W)-MOR C60 M0.047
C45 0.0022 C46 0.0022 C47 0.0022 C48 0.0022
C49 0.0022 C50 0.0022 C51 0.0022 C52 0.0022
SH0810360P ST1
FL
FLG
FRG
FR
SL
SLG
SRG
SR
ST2
CENTER
CG
P4022047
TO MAIN P/T
120V Version:Jumper
230V Version:2.5A 250V
A101 A10200020P
A102 A10200020P
FC4 F102 FC3
FC2 F101 FC1
USA/CANADA SB 5A/125V
EUROPE T 3.15A/250V
PO ON/OFF
R5 2.2K
Q1 KTD1302
R18 82K
C9 1/50
D7 1N4004
RY1 DG2D1-3
AC-CAP/4700P(CE)
R3 2.2K
D6 1N4004
D5 MTZ4.3B
C7 0.33/50
R4 2.2K
+6V
IC1 KA7806
R1 10(1W)-MOR
C5 1/50
1000/16(SR)
C4
D1 1N4004
D2 1N4004
D3 1N4004
D4 1N4004
C3 0.047(A)
C1 0.047(A)
C2 0.047(A)
FC6 F103 FC5
USA/CANADA SB 315mA/125V
EUROPE T 315mA/250V
PT1 PT-TX6100
SD0L81 SW1
CW10-1 CW10-2
AC C1
USA/CANADA 120V/60Hz
EUROPE 230V/50Hz
AC-CORD-7A/250V
AC CORD IN
R23 3.3M(1/2)-MOR
USA CANADA VERSION ONLY
C13 M0.1
D8 6A04
D9 6A04
D10 6A04
D11 6A04
C14 M0.1
C16 10000/63
C15 10000/63
C11 M0.1
C12 M0.1
C110 M0.1
D26 1N4004
+15v
IC2 KA7815
R7 4.7(2W)-CRH200
C26 0.1/25
C24 1/50
C22 2200/35
C27 0.1/25
C25 1/50
C23 2200/35
-15v
IC3 KA7915
R8 4.7(2W)-CRH200
C20 M0.047
D12 1N4004
D13 1N4004
D14 1N4004
D15 1N4004
C21 M0.047
C19 M0.047
C17 M0.047
C18 M0.047
FC8 F104 FC7
USA/CANADA SB 2A/125V
EUROPE T 2A/250V
FC10 F105 FC9
USA/CANADA SB 2A/125V
EUROPE T 2A/250V
IC4 KA7806
R9 MR10(1)
C32 1/50
C33 0.1/25
C31 2200/16
D16 1N4004
D17 1N4004
C29 M0.047
C30 M0.047
C28 M0.047
FC12 F106 FC11
USA/CANADA SB 800mA/125V
EUROPE T 800mA/250V
KTA1267-Y Q6
R33 3.3K
R34 68K
R35 10K
R30 22K
D25 MTZ6.8B
R29 1K
KTC3198-GR Q3
KTC3198-GR Q4
KTC3198-GR Q5
R26 1.5K
R31 15K
C54 470/6.3
R11 4.7(1/4)
R10 4.7(1/4)
D21 1N4004
D20 1N4004
C36 0.01
C34 470/35
R12 3.3
R13 3.3
C72 0.047(A)
C71 0.047(A)
CW6-1 CW6-2
GND
FROM HEAT SINK
POSISTOR
CW2-1 CW2-2
CW1-1 CW1-2
CW3-2 CW3-1
CW6-1 CW6-2 CW6-3
CW7-1 CW7-2 CW7-3 CW7-4 CW7-5 CW7-6
CW9-1 CW9-2 CW9-3
J6-1 J6-2 J6-3
CWT07-1 CWT7-2 CWT7-3 CWT7-1 CWT2-2 CWT2-3
CWT09-1 CWT09-2 CWT09-3
PT102 PT-TC0590V
FROM MAIN B'D

SCHEMATIC DIAGRAM

PREOUT BOARD

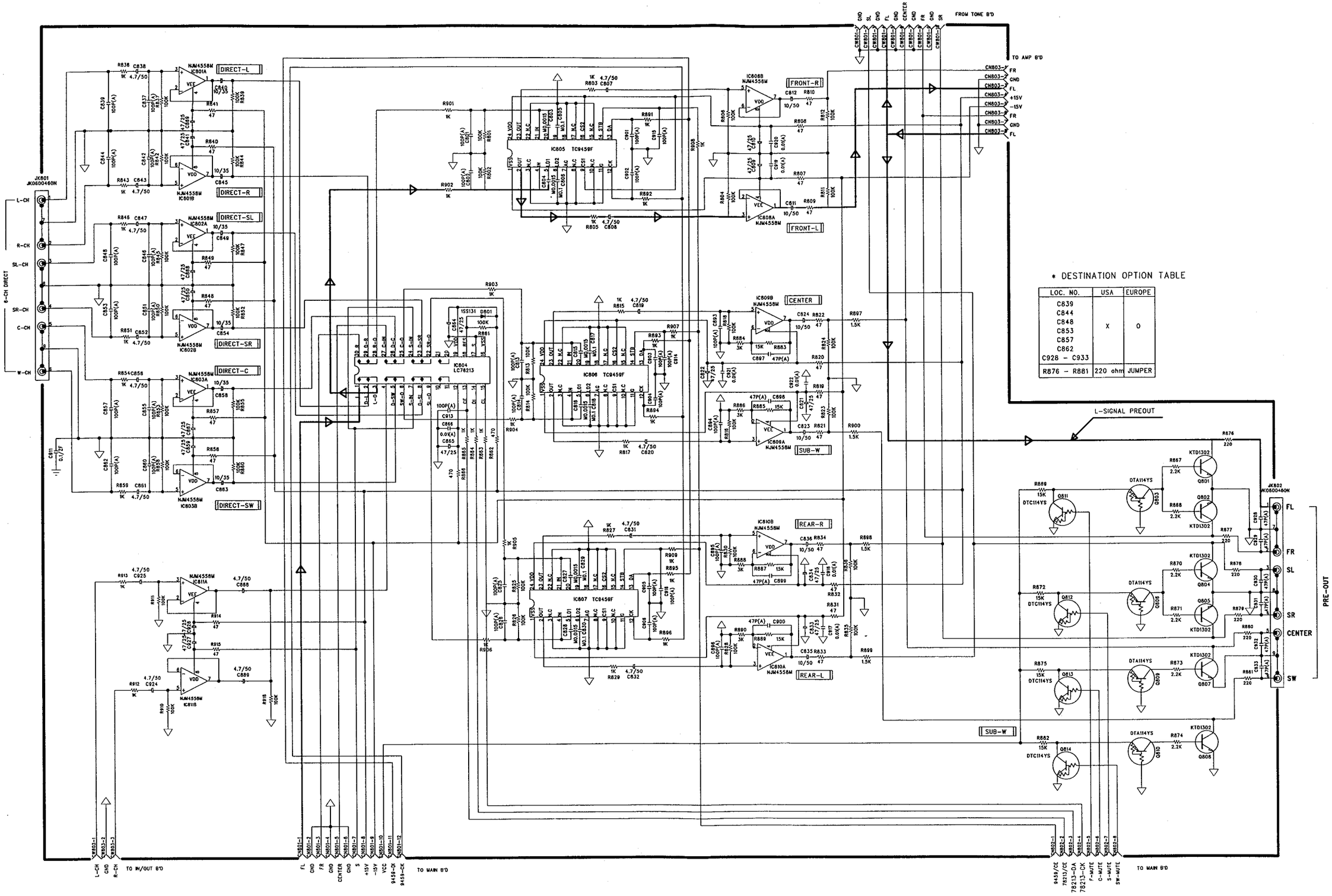

* DESTINATION OPTION TABLE

LOC. NO.	USA	EUROPE
C839 C844 C848 C853 C857 C862 C928 – C933	X	O
R876 – R881	220 ohm	JUMPER

SCHEMATIC DIAGRAM

PREOUT BOARD

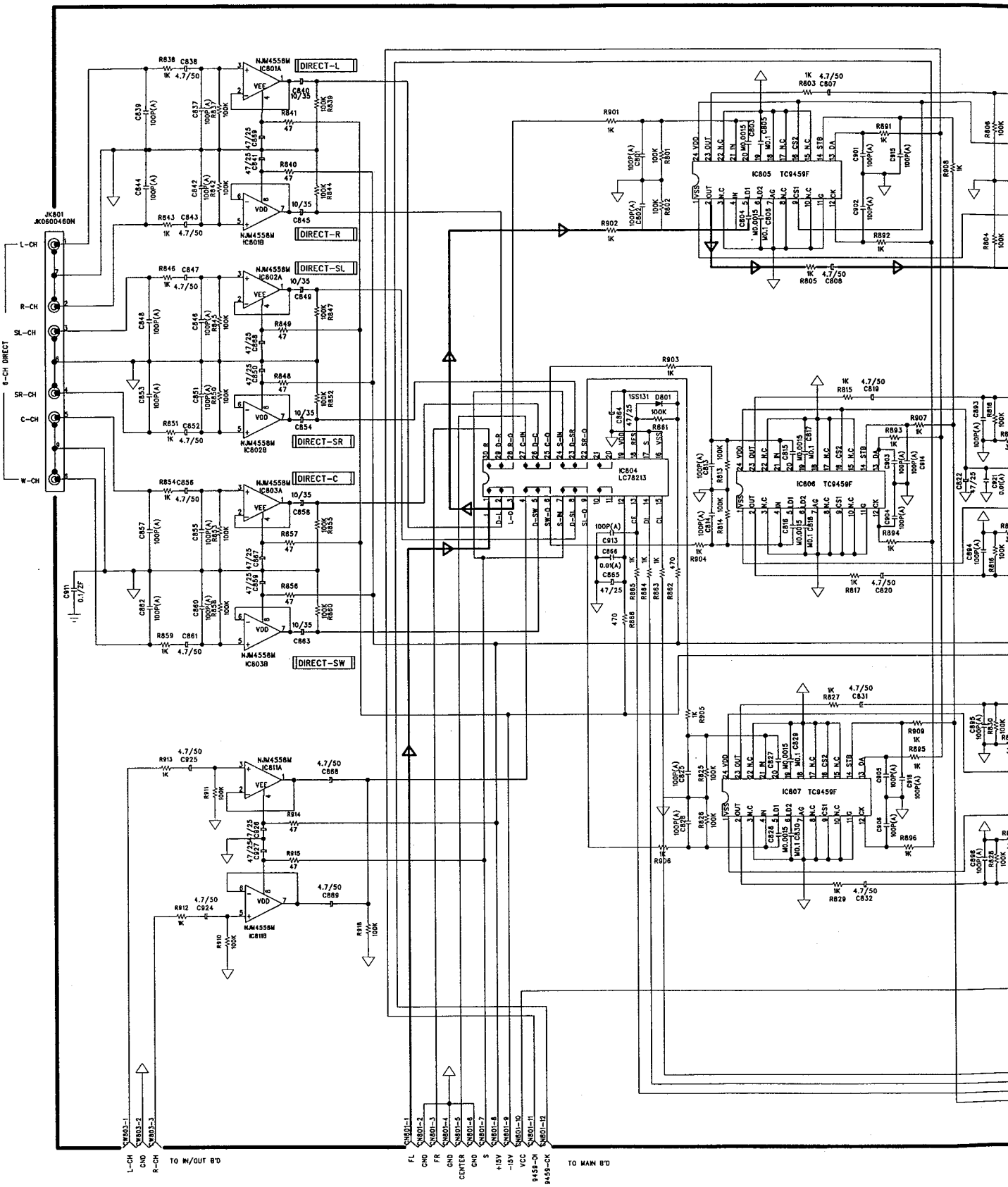

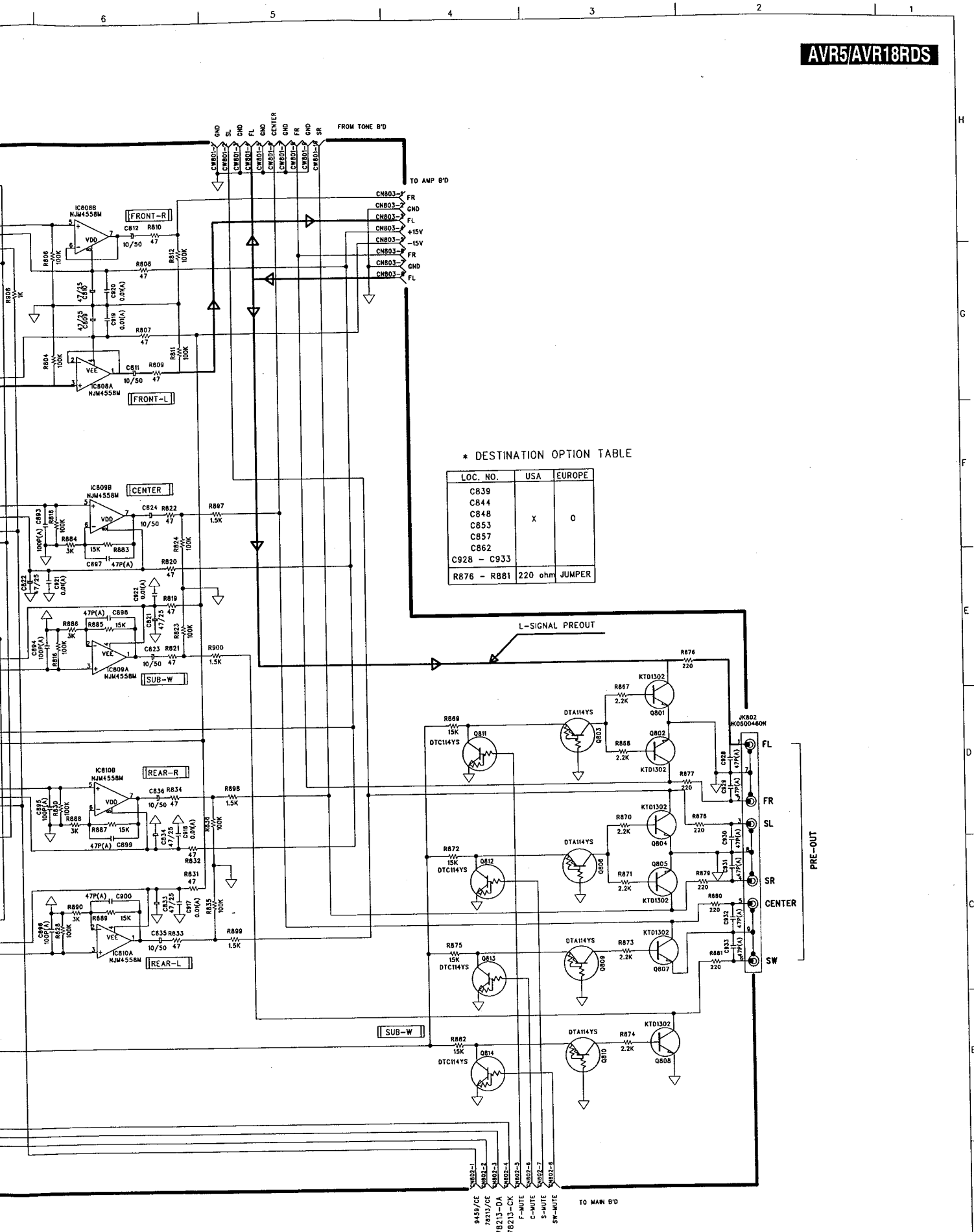

* DESTINATION OPTION TABLE

LOC. NO.	USA	EUROPE
C839 C844 C848 C853 C857 C862 C928 – C933	X	O
R876 – R881	220 ohm	JUMPER

WIRING DIAGRAM

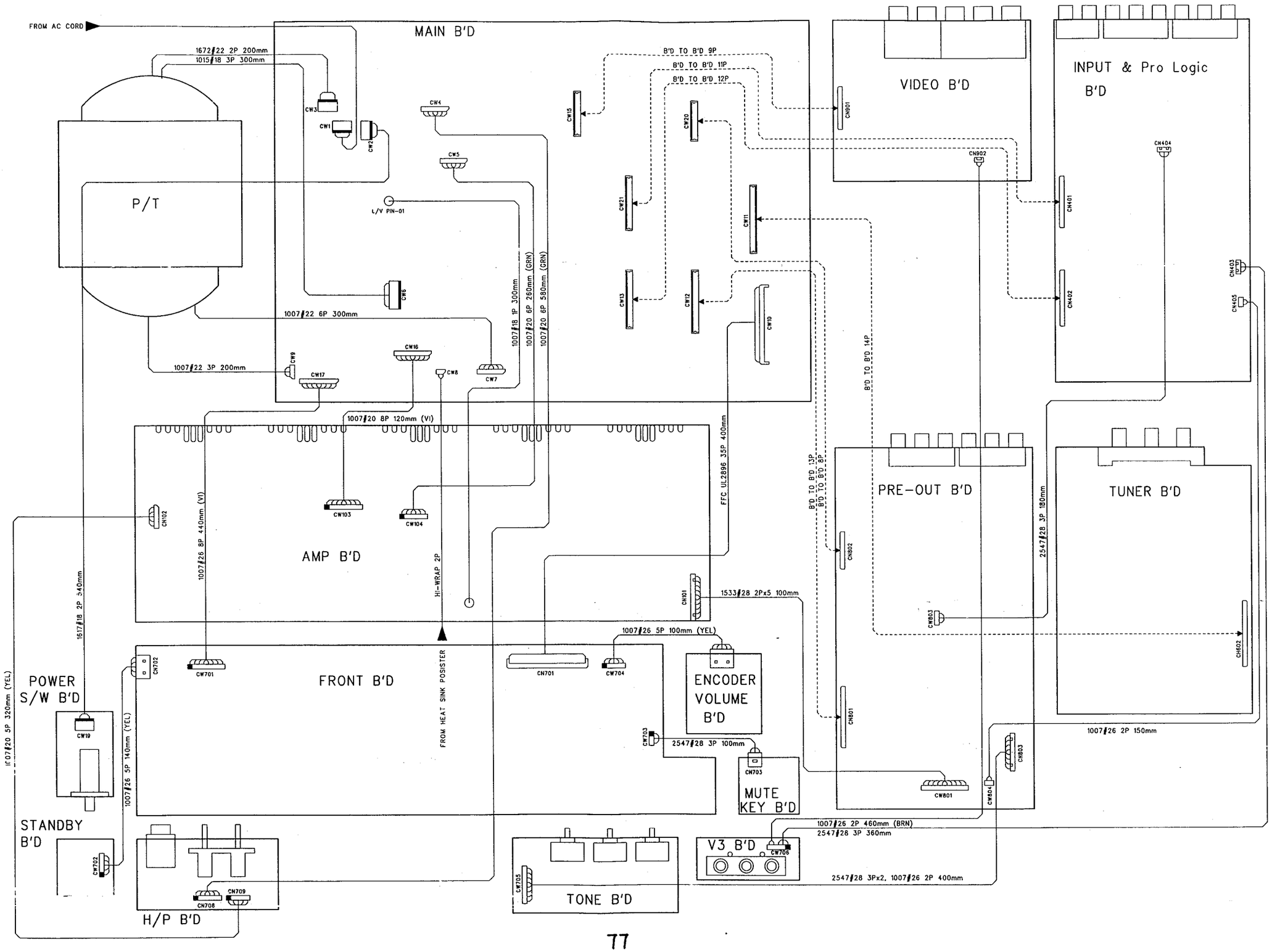

WIRING DIAGRAM

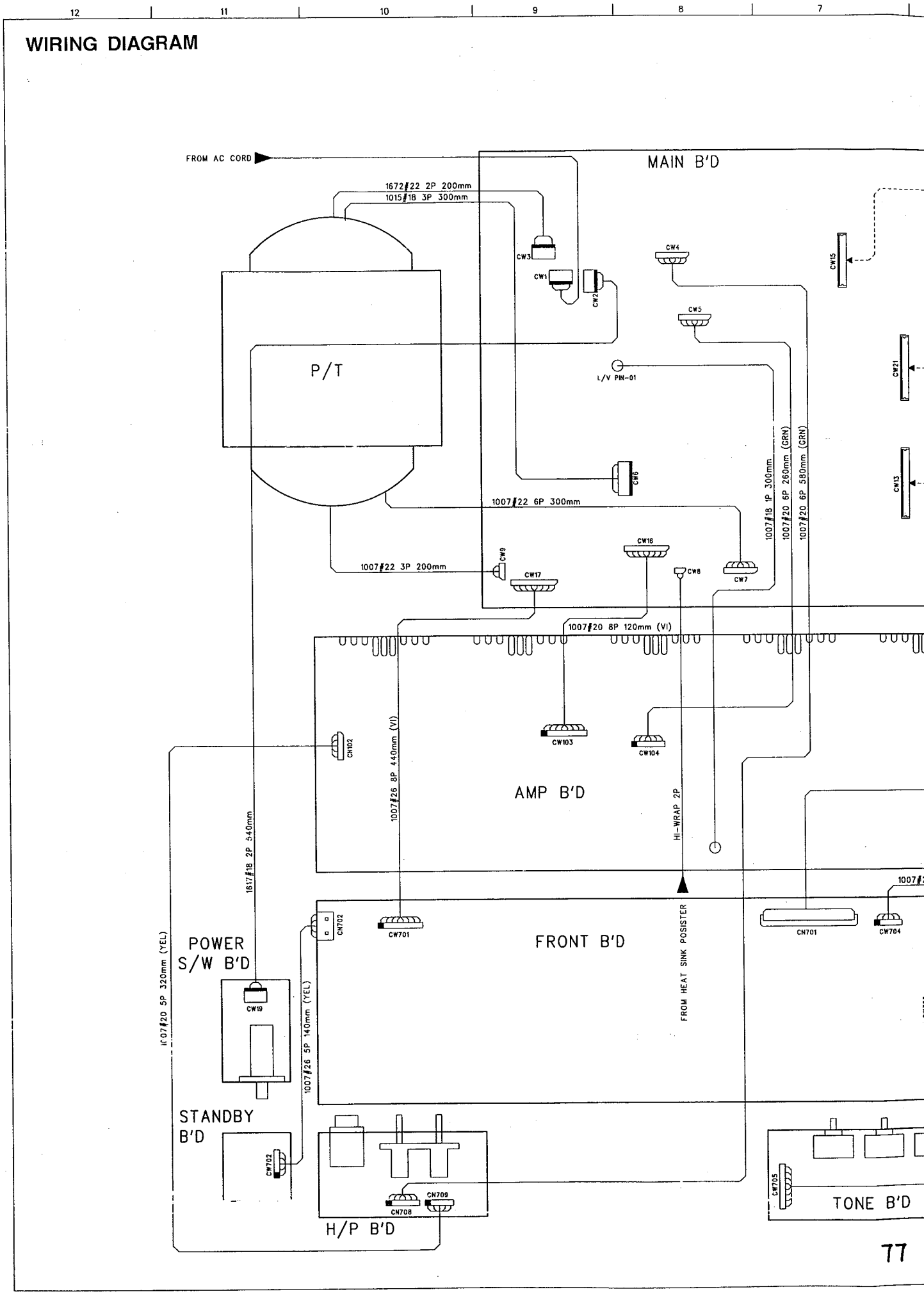

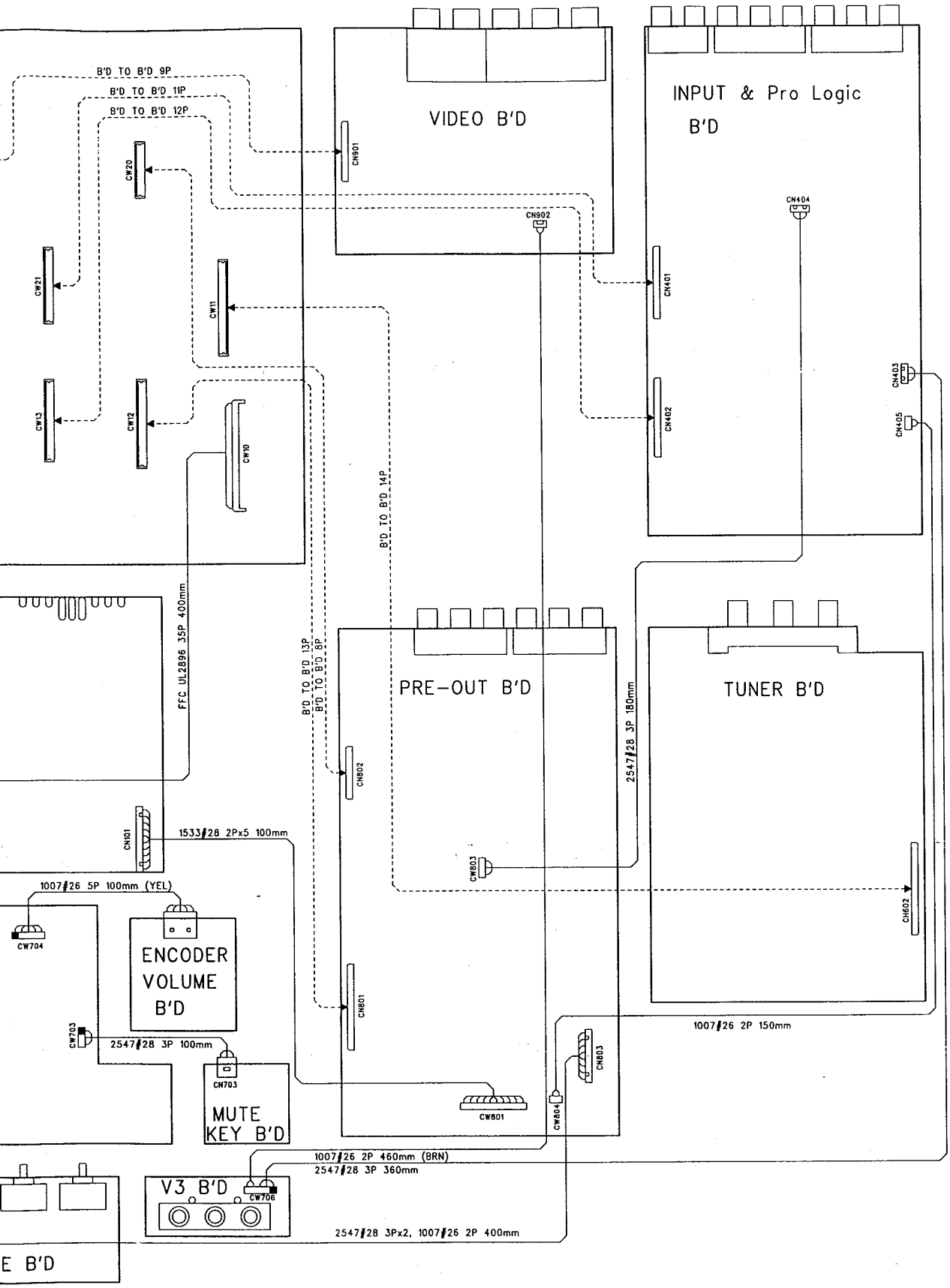
B'D TO B'D 9P
B'D TO B'D 11P
B'D TO B'D 12P
VIDEO B'D
CN901
CN902
INPUT & Pro Logic
B'D
CN404
CN401
CN402
CN403
CN405
CW20
CW21
CW11
CW13
CW12
CW10
B'D TO B'D 14P
FFC UL2896 35P 400mm
B'D TO B'D 13P
B'D TO B'D 8P
PRE-OUT B'D
TUNER B'D
2547#28 3P 180mm
CN802
CN101
1533#28 2Px5 100mm
CW803
CN602
1007#26 5P 100mm (YEL)
CW704
ENCODER
VOLUME
B'D
CN801
CW703
2547#28 3P 100mm
1007#26 2P 150mm
CN703
MUTE
KEY B'D
CN803
CW801
CW804
1007#26 2P 460mm (BRN)
2547#28 3P 360mm
V3 B'D
CW706
2547#28 3Px2, 1007#26 2P 400mm
E B'D

AVR5 only

PACKING MATERIAL

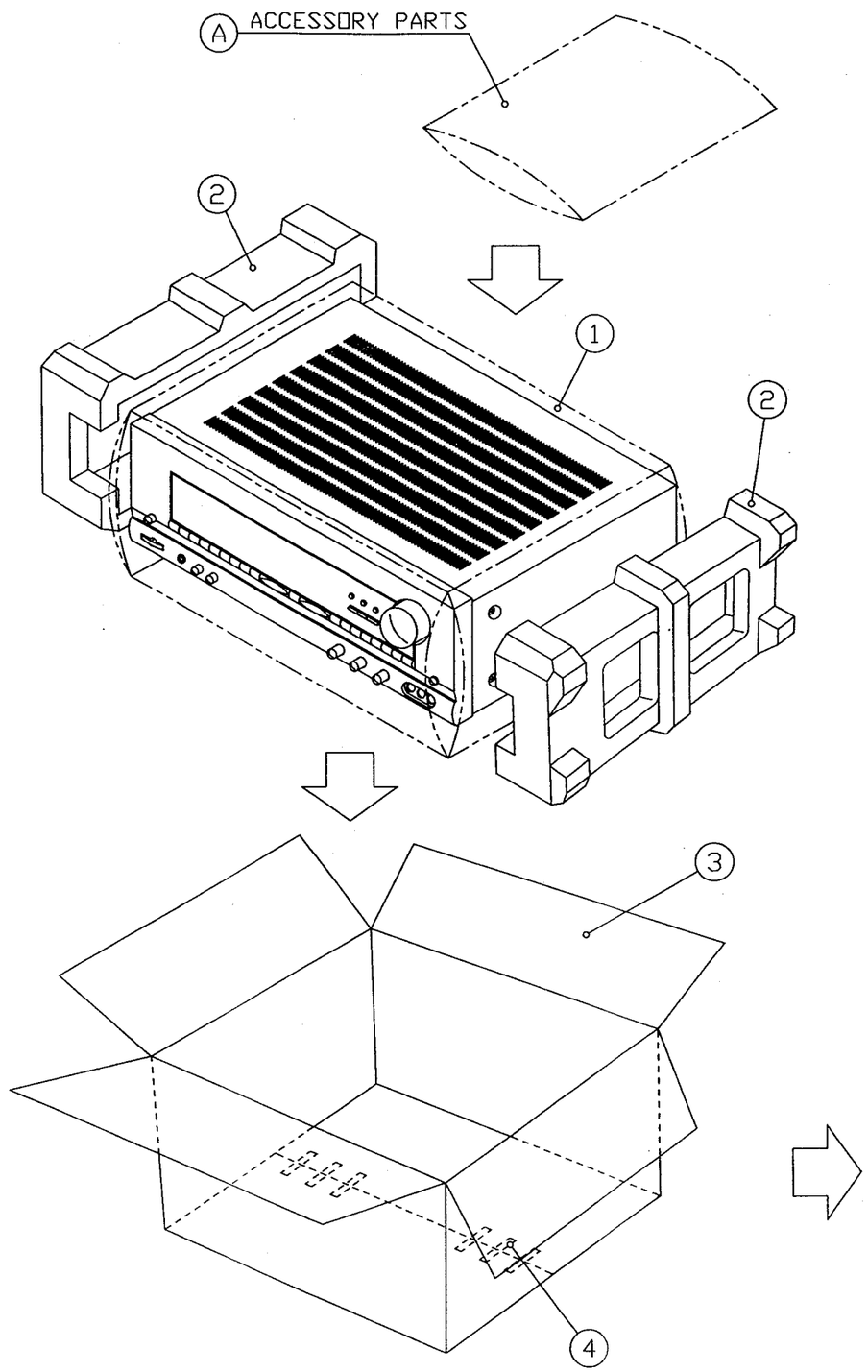

PACKING MATERIAL

NO	PARTS NAME	PART NO	Q'TY	REMARK
A	POLY-BAG-I(G)	YVAP-01862-ZZ4	1	***
	INST-MANUAL	YIAR-I2000-ZZA	1	***
	REMOTE CONTROL	ACRC-0055J-000	1	***
	WARRANTY CARD	YWAR-I2000-ZZA	1	***
	BATTERY	***	2	***
	FM-ANTENNA	ANTT-00054-075	1	***
	AM-ANTENNA	ANTL-00060-E50	1	***
	MATCHING TRANSFORMER	TFMA-00100-D00	1	***
1	TOILON-SHEET	YVAP-13320-ZZ4	1	***
2	CUSHION-L/R	YSAP-12070-002	2	EPS
3	BOX-GIFT	YGAP-14250-ZZA	1	DW3
4	AIR-STAPLES	MMSC-00900-004	6	STEEL
5	OPP TAPE	***	*	***
6	PALLETS	MWAW-00910-003	*	***
7	WRAP	7JJG-00212-001	*	***
8	LABEL	***	4	***

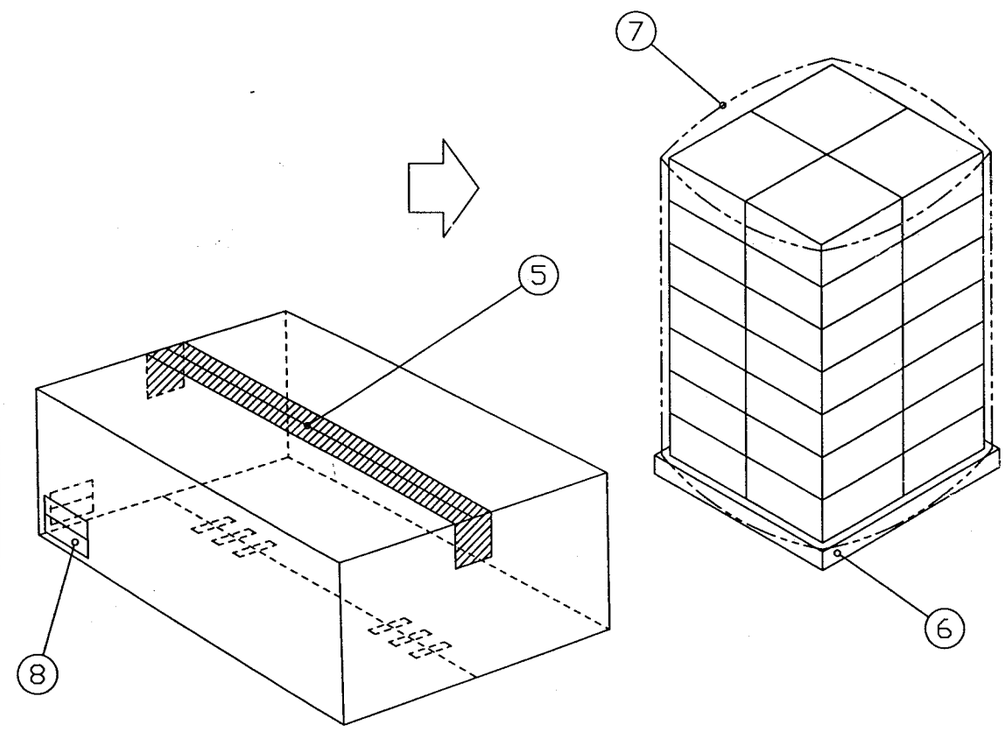

AVR5 only

PACKING MATERIAL

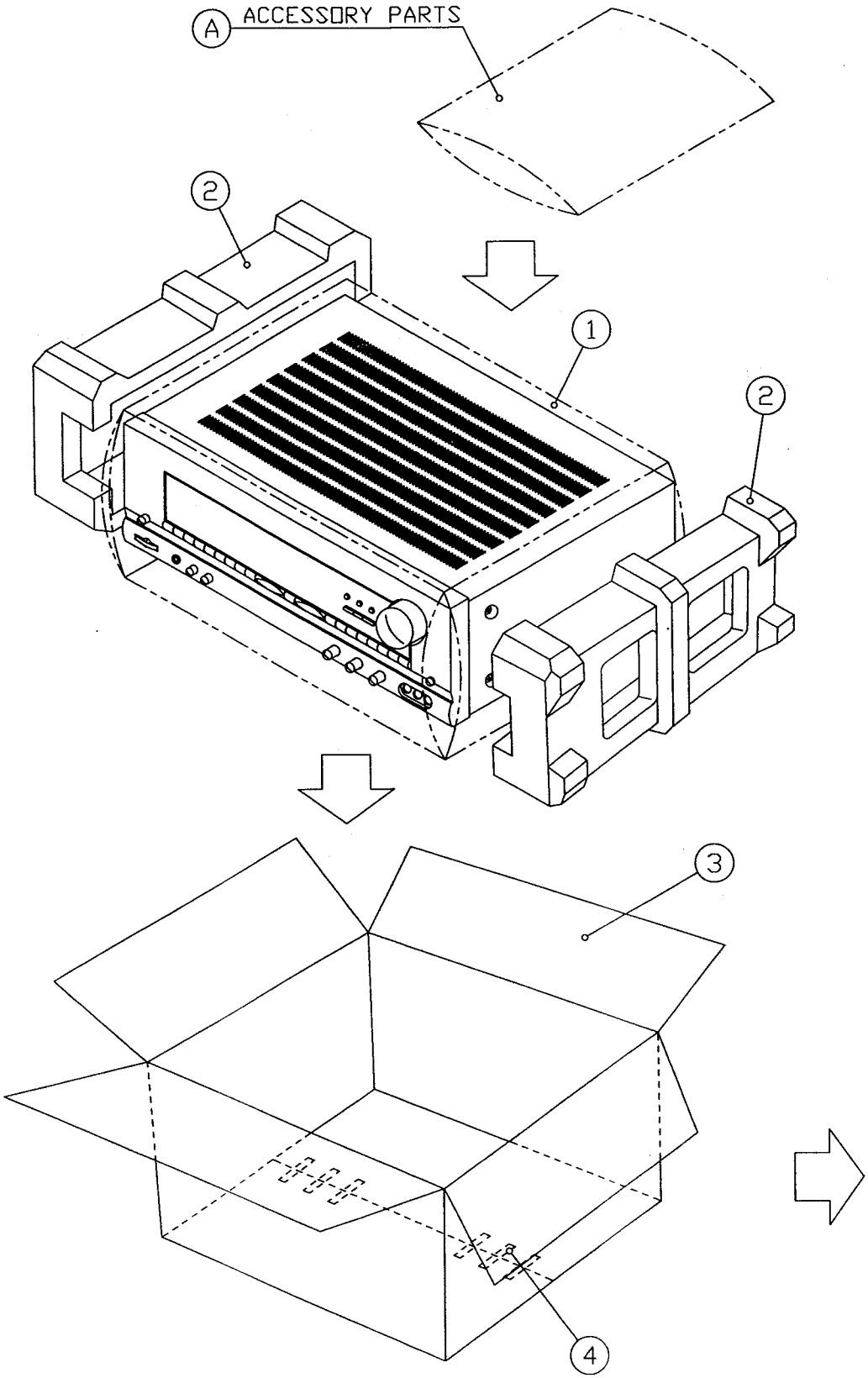

PACKING MATERIAL

NO	PARTS NAME	PART NO	Q'TY	REMARK
A	POLY-BAG-I(G)	YVAP-01862-ZZ4	1	***
	INST-MANUAL	YIAR-I2000-ZZA	1	***
	REMOTE CONTROL	ACRC-0055J-000	1	***
	WARRANTY CARD	YWAR-I2000-ZZA	1	***
	BATTERY	***	2	***
	FM-ANTENNA	ANTT-00054-075	1	***
	AM-ANTENNA	ANTL-00060-E50	1	***
	MATCHING TRANSFORMER	TFMA-00100-D00	1	***
1	TOILON-SHEET	YVAP-13320-ZZ4	1	***
2	CUSHION-L/R	YSAP-12070-002	2	EPS
3	BOX-GIFT	YGAP-14250-ZZA	1	DW3
4	AIR-STAPLES	MMSC-00900-004	6	STEEL
5	OPP TAPE	***	*	***
6	PALLETS	MWAW-00910-003	*	***
7	WRAP	7JJG-00212-001	*	***
8	LABEL	***	4	***

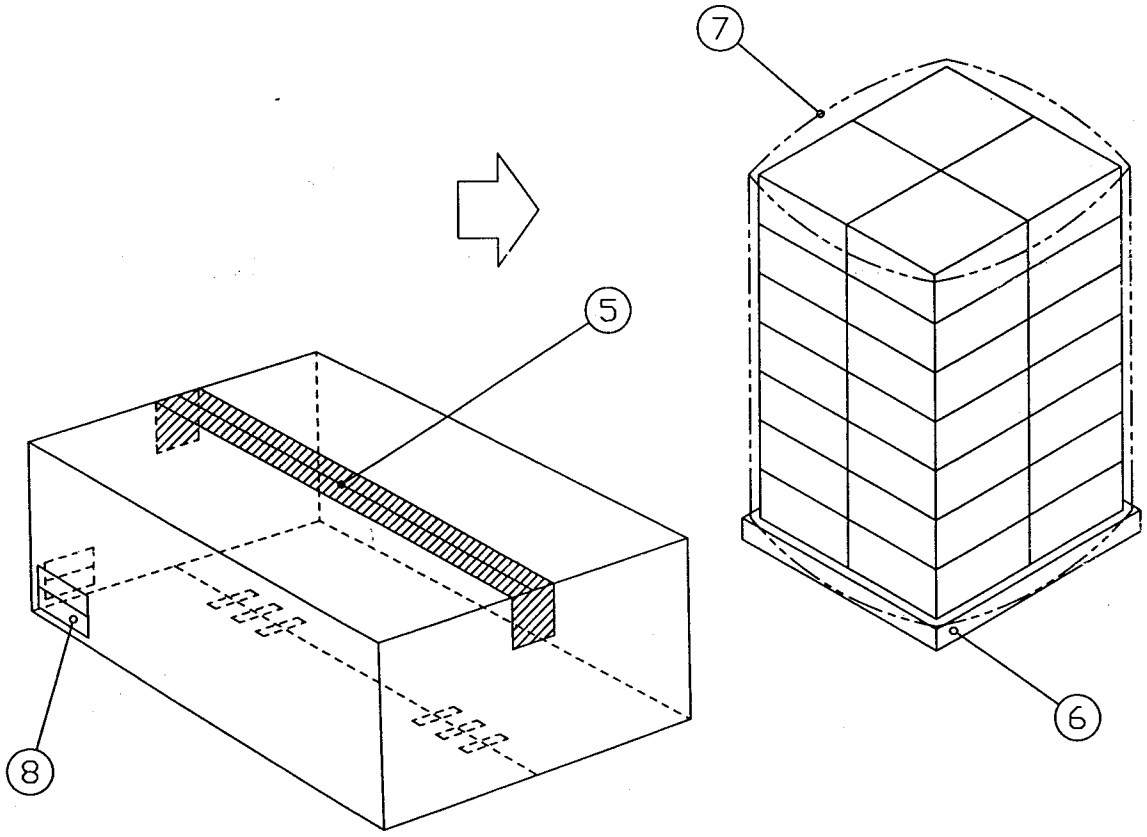

AVR18RDS only

PACKING MATERIAL

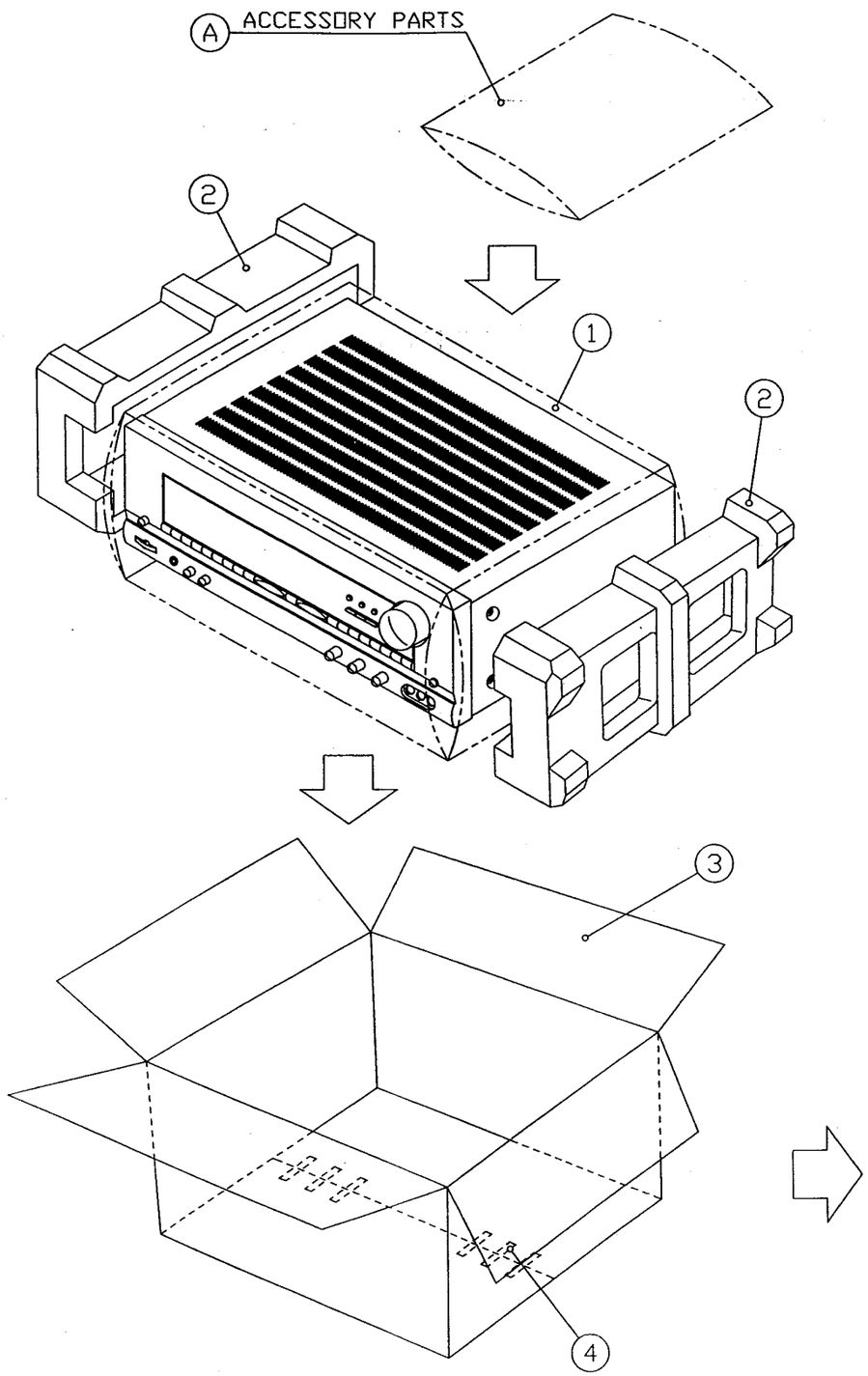

PACKING MATERIAL

NO	PARTS NAME	PART NO	Q'TY	REMARK
A	POLY-BAG-I(G)	YVAP-01862-ZZ4	1	***
	INST-MANUAL	YIAR-I2001-ZZE	1	***
	REMOTE CONTROL	ACRC-0056J-000	1	***
	WARRANTY CARD	YWAR-I2001-ZZA	1	***
	BATTERY	***	2	***
	FM-ANTENNA	ANTT-00090-075	1	***
	AM-ANTENNA	ANTL-00060-E50	1	***
1	TOILON-SHEET	YVAP-13320-ZZ4	1	***
2	CUSHION-L/R	YSAP-12070-002	2	EPS
3	BOX-GIFT	YGAP-14250-ZZA	1	DW3
4	AIR-STAPLES	MMSC-00900-004	6	STEEL
5	OPP TAPE	***	*	***
6	PALLETS	MWAW-00910-003	*	***
7	WRAP	7JJG-00212-001	*	***
8	LABEL	***	4	***

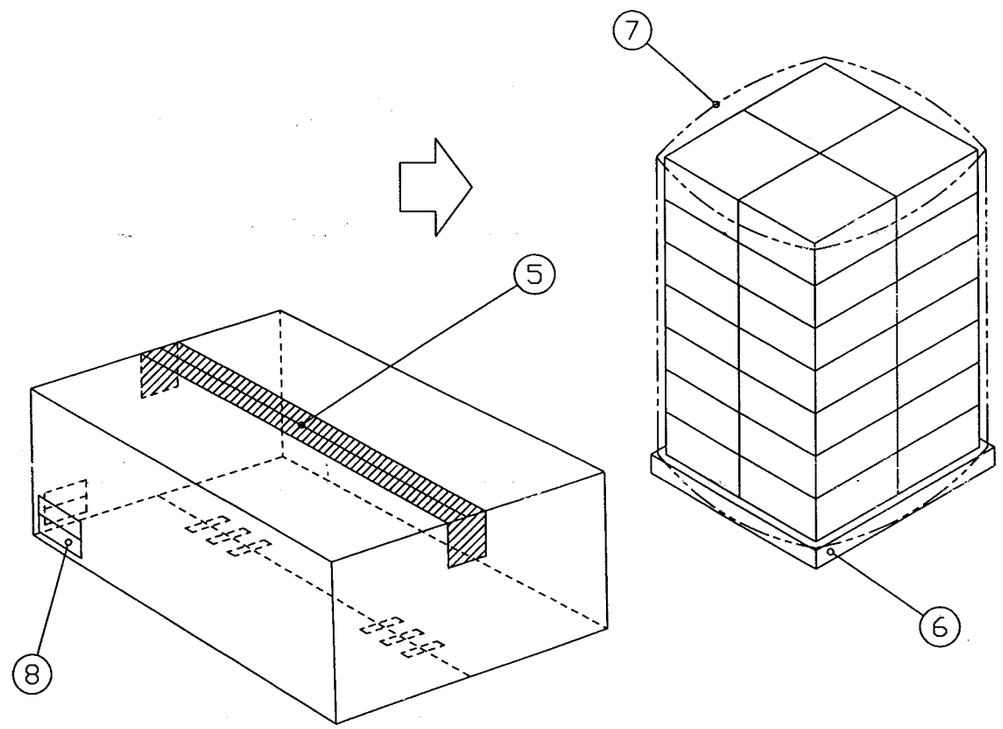

AVR18RDS only

PACKING MATERIAL

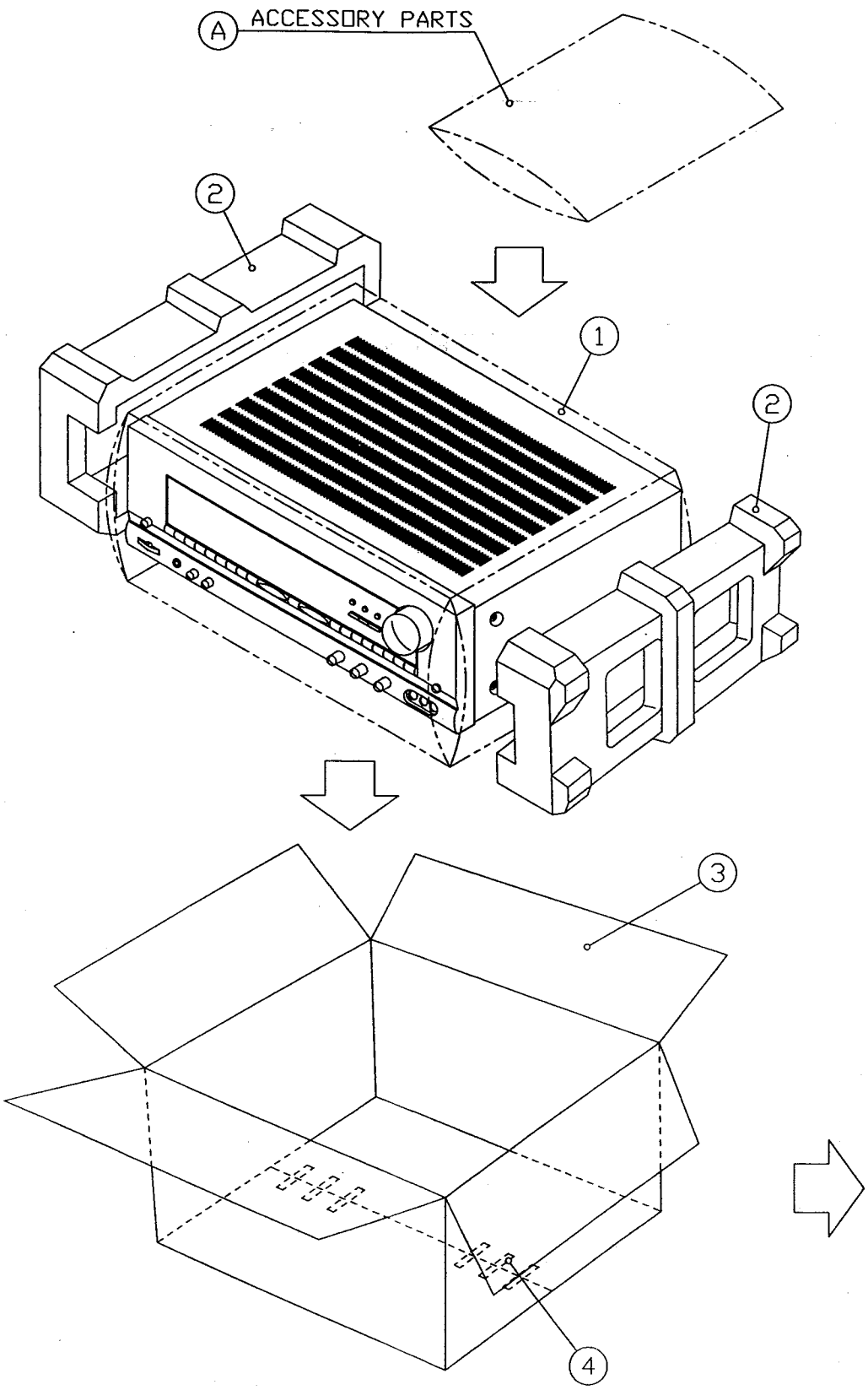

PACKING MATERIAL
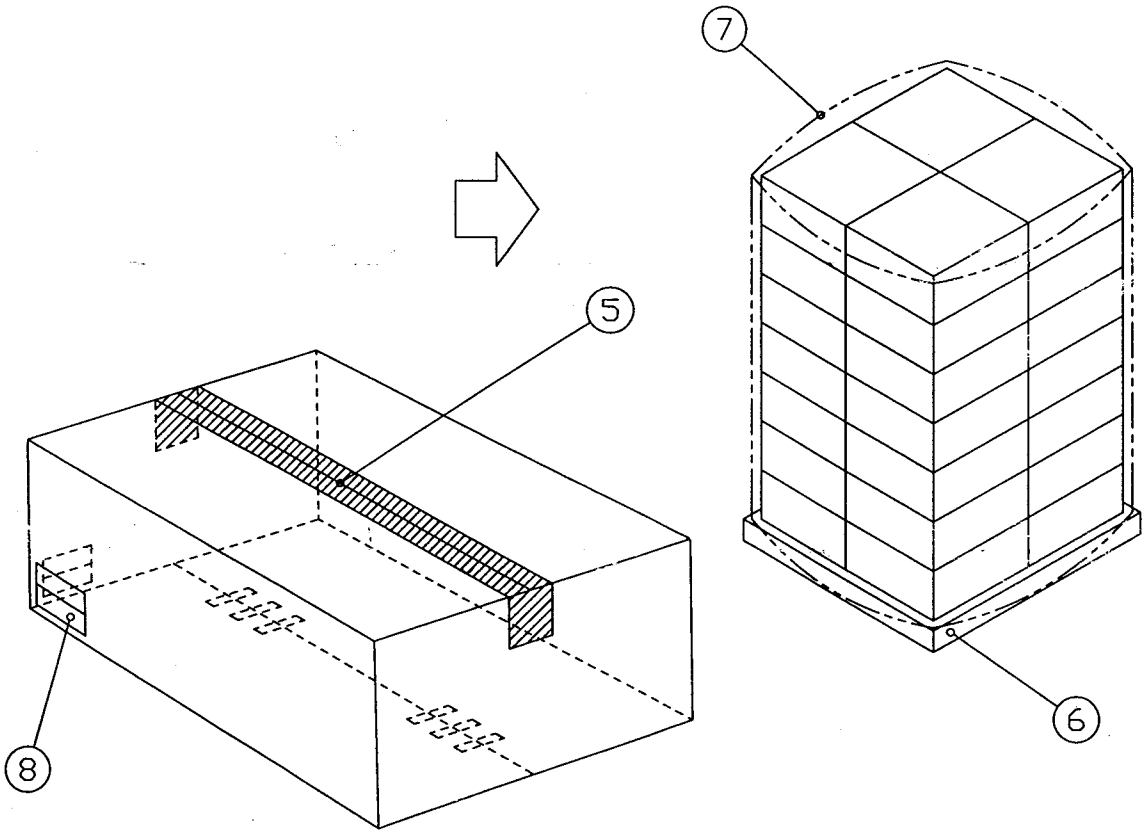
NO	PARTS NAME	PART NO	Q'TY	REMARK
A	POLY-BAG-I(G)	YVAP-01862-ZZ4	1	***
	INST-MANUAL	YIAR-I2001-ZZE	1	***
	REMOTE CONTROL	ACRC-0056J-000	1	***
	WARRANTY CARD	YWAR-I2001-ZZA	1	***
	BATTERY	***	2	***
	FM-ANTENNA	ANTT-00090-075	1	***
	AM-ANTENNA	ANTL-00060-E50	1	***
1	TOILON-SHEET	YVAP-13320-ZZ4	1	***
2	CUSHION-L/R	YSAP-12070-002	2	EPS
3	BOX-GIFT	YGAP-14250-ZZA	1	DW3
4	AIR-STAPLES	MMSC-00900-004	6	STEEL
5	OPP TAPE	***	*	***
6	PALLETS	MWAW-00910-003	*	***
7	WRAP	7JJG-00212-001	*	***
8	LABEL	***	4	***