The Harman Kardon
Model AVR25
AUDIO AND VIDEO RECEIVER

Manual 188A

Technical Manual

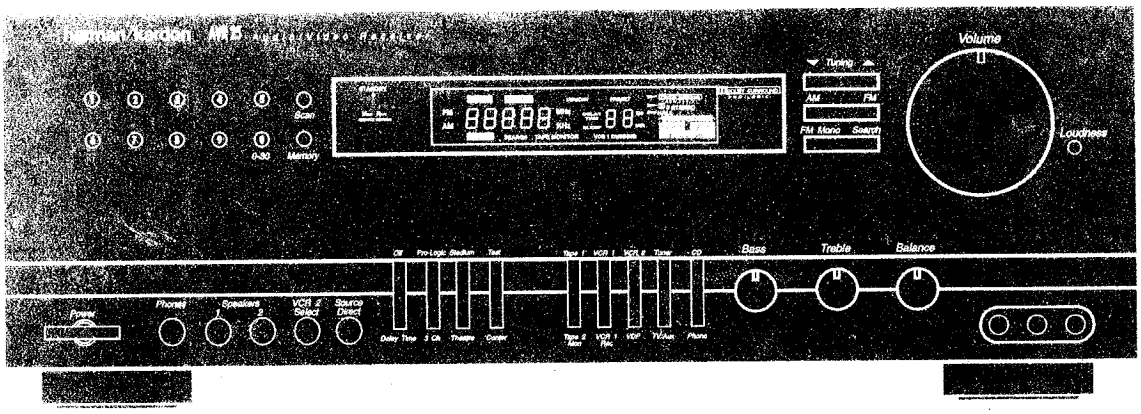

■ CONTENTS ■

SPECIFICATIONS ····· 2
LEAKAGE TEST ····· 4
CONTROLS AND FUNCTIONS ····· 5
DISASSEMBLY PROCEDURES ····· 7
ALIGNMENT PROCEDURES ····· 9
CIRCUIT DESCRIPTION ····· 12
BLOCK DIAGRAM ····· 21
WIRING DIAGRAM ····· 23
TROUBLE SHOOTING ····· 25
GENERAL UNIT PARTS LIST ····· 28
GENERAL UNIT ····· 29
PRINTED CIRCUIT BOARDS ····· 31
ELECTRICAL PARTS LIST ····· 37
ICS LEAD & IDENTIFICATION ····· 46
SCHEMATIC DIAGRAMS ····· 55
TRANSISTORS ····· 61
LEAD & IDENTIFICATION

harman/kardon

Parts and Service Office
240 Crossways Park West, Woodbury, N.Y. 11797
1112-0330A152 G9212 1500 Printed in Korea

SPECIFICATIONS

	Nominal	Limit
● FRONT AMP SECTION		
RMS Output Power		
THD (0.09 %, 8 ohms)	≧ 68 W	≧ 65 W
Both Channel Driven (20 Hz-20 kHz)		
THD (20Hz-20KHz) at 65 W, 8 ohms		
20 Hz	≦ 0.09 %	≦ 0.2 %
1 kHz	≦ 0.09 %	≦ 0.2 %
20 kHz	≦ 0.09 %	≦ 0.2 %
IM Distortion at 65 W, 8 ohms, 60:700 Hz=4:1	≦ 0.1 %	≦ 0.2 %
Input Sensitivity at 65 W, 8 ohms		
Phono (MM)	2.5 mV	2.5±0.3 mV
CD, AUX, VCR	150 mV	150±30 mV
S/N Ratio Input Shorted at Volume Max (WTD IHF-A) at 65 W, 8 ohms		
Phono	≧ 72 dB	≧ 68 dB
CD, AUX	≧ 91 dB	≧ 88 dB
TV, VCR1, 2	≧ 91 dB	≧ 88 dB
Phono Overload at 1 kHz, THD: 0.5 % Phono Input → Tape Monitor Output	≧ 140 mV	≧130 mV
Phono Equalization		
RIAA 30 Hz-15 kHz, Tape Monitor, Output	RIAA	RIAA±1.0 dB
Tone Control		
Bass, 100 Hz	±10 dB	±10±2 dB
Treble, 10 kHz	±10 dB	±10±2 dB
Loudness contour at -40 dB		
100 Hz	+6 dB	6±2 dB
10 kHz	+3 dB	3±2 dB
Frequency Response at 1W, 8 ohms		
CD/AUX		
20 Hz, 20 kHz	±0.5 dB	±1 dB
Channel Crosstalk Input Shorted at 65 W, 8 ohms		
1 kHz	≧ 55 dB	≧ 50 dB
10 kHz	≧ 45 dB	≧ 40 dB
● CENTER AMP SECTION		
RMS Output Power.		
THD = 0.09 %, 8 ohms, 1 kHz		
Only Center Channel Driven	≧ 67 W	≧ 60 W
S/N Ratio		
Input Shorted, IHF-A WTD	≧ 78 dB	≧ 73 dB
Frequency Response at -3 dB		
Normal	100-20 kHz	150-15 kHz
Wide	20-20 kHz	50-15 kHz
● REAR AMP SECTION		
RMS Output Power.		
THD = 1 %, 8 ohms, 80 Hz-7 kHz	≧ 27 W x 2	≧ 25 W x 2
Both Rear Channel Driven		

	Nominal	Limit
S/N Ratio		
Input Shorted, (IHF-A WTD)		
Dolby	≧ 65 dB	≧ 63 dB
Stadium	≧ 65 dB	≧ 63 dB
Theater	≧ 65 dB	≧ 63 dB
Frequency Response at -3 dB		
8 ohms, Dolby Pro-Logic	80-7 kHz	100-6 kHz
● VIDEO SECTION		
Input Sensitivity/Impedance.		
VCR1, VCR2, VDP	1 Vp-p/75 Ω dB	1 Vp-p/75Ω±0.5 dB
Output Level/Impedance		
VCR1, REC out, TV Monitor Out	1 Vp-p/75 Ω dB	1 Vp-p/75Ω±0.5 dB
Frequency Response at -3 dB	DC -10 MHz	5-6 MHz
Crosstalk at 1.0 MHz	≧ 50 dB	≧ 45 dB
● FM SECTION		
Tuning Cover Range 50 kHz Step		
Low	87.5 MHz	
High	108.0 MHz	
Usable Sensitivity (75 ohms Input)		
S/N 30 dB UL/CSA	≦ 11.2 dBf	≦ 17.2 dBf
S/N 26 dB Europe		
Image Rejection (at 106 MHz)		
UL/CSA	≧60 dB	≧ 55 dB
Europe	≧90 dB	≧ 80 dB
IF Rejection (at 90 MHz)	≧110 dB	≧ 100 dB
Full Limiting (at -3 dB)	≦ 12.2 dBf	≦ 15.2 dBf
50 dB Quieting Sensitivity(at 98 MHz, 75 k DIV)		
IHF Band Pass Filter		
Mono	≦ 19.2 dBf	≦ 23.2 dBf
Stereo	≦ 40.2 dBf	≦ 43.2 dBf
Distortion (1 kHz 100 % MOD at 98 MHz)		
IHF Band Pass Filter		
Mono	≦ 0.2 %	≦ 0.5 %
Stereo	≦ 0.4 %	≦ 0.7 %
S/N Ratio (1 mV 75K DIV Input 100 % MOD, at 98 MHz)		
IHF Band Pass Filter		
Mono	≧ 70 dB	≧ 65 dB
Stereo	≧ 65 dB	≧ 60 dB
Frequency Response (20 Hz-15 kHz)	± 1.5 Hz	± 3 Hz
AM-Rejection Ratio (100 μV-20 mV Input)	≧ 60 dB	≧ 50 dB
Search Level (at 98 MHz)	31.2 dBf	31.2± 5 dBf
Automatic Stereo Threshold (at 98 MHz)	31.2 dBf	31.2± 5 dBf

	Nominal	Limit
Muting Threshold. (at 98 MHz)	31.2 dBf	31.2± 5 dBf
Overload. at 98 MHz		
(100 % MOD 100 mV RF Input)	≦ 0.2 %	≦ 0.5 %
Suprious Response.		
(at 98 MHz Antenna Input 3 μV)	≧ 70 dB	≧ 60 dB
Capture Ratio 40/60 dBf	≦ 2 dB	≦ 2.5 dB
Alternative Channel Selectivity.	≧ 65 dB	≧ 55 dB
(Input at 98 MHz)	±400 kHz	
Stereo Separation. (100% MOD, 1 mV Input at 98 MHz)		
IHF Band Pass Filter		
100 Hz	≧ 40 dB	≧ 35 dB
1 kHz	≧ 45 dB	≧ 40 dB
10 kHz	≧ 35 dB	≧ 30 dB
Output Voltage. (at 75 kHz DEV, 1 kHz MOD, 1 mV Input)		
Mono	500 mV	500± 100 mV
Stereo	450 mV	450± 100 mV

- AM SECTION

Tuning Cover Range. 10 kHz/9 kHz Step		
Low	520/522 kHz	
High	1710/1611 kHz	

	Nominal	Limit
Usable Sensitivity.		
(400Hz, 30% MOD, S/N 20 dB)	≦ 500 μV/m	≦ 800 μV/m
Image Rejection. (at 1400 kHz)	≧ 35 dB	≧ 30 dB
IF Rejection. (at 600 kHz)	≧ 60 dB	≧ 50 dB
AGC Figure of Merit.	≧ 50 dB	≧ 45 dB
(From 100 mV/m at 1000 kHz)		
Distortion.	≦ 0.5 %	≦ 1.2 %
(400 Hz, 30% MOD, 5 mV/m Input)		
IF Bandwidth	6 kHz	4-9 kHz
(6 dB Down, 350 μV/m)		
Audio Response. (5 mV/m Input 1 kHz 0 dB, 1000 kHz)		
at -6 dB	80 -2.3 kHz	100-2 kHz
Selecticity. at 350 μV/m		
±10 kHz.	≧ 25 dB	≧ 20 dB
S/N Ratio (1000 kHz, With Antenna Input 5 mV/m)	≧ 45 dB	≧ 40 dB
RF Overload 400 Hz 80 % MOD, 100 mV/m Input.	≦ 5 %	≦ 10 %
Search Level. (at 1000 kHz)	800 μV	800±6 dBμV
Output Voltage. (400 Hz 30 % MOD 5 mV/m Input)	165 mV	165±40 mV
Whistle	≦ 7 %	≦ 12 %

Note : Nominal speces represent the design specs. All units should be able to approximate these-some will exceed and some may drop slightly below these specs. Limit specs represent the absolute worst condition that still might be considered acceptable ; in no case should a unit fail to meet limit specs.
This manual is based on the American Standard wiring diagram, and information on regional component variations through use of parts list. Design and specifications subject to change without notice for improvement.

LEAKAGE TEST

Before returning the unit to the user, perform the following safety checks:

1. Inspect all lead dress to makes certain that leads are not pinched or that hardware is not lodged between the chassis and other metallic parts in the unit.
2. Be sure that any protective devices such as nonmetallic control knobs, insulating fishpapers, cabinet backs, adjustment and compartment covers or shields, isolation resistor-capacity networks, mechanical insulators, etc. Which were removed for servicing are properly reinstalled.
3. Be sure that no shock hazard exists; check for leakage current using Simpson Model 229 Leakage Tester, standard equipment item no. 21641, RCA model WT540A or use alternate method as follows: plug the power cord directly into a 120-volt AC receptacle (do not use an Isolation transformer for this test).

Using two clip leads, connects a 1500 ohm, 10-watt resistor paralleled by a 0.15µF capacitor, in series with all exposed metal cabinet parts and a known earth ground, such as a water pipe or conduit. Use a VTVM or VOM with 1000 ohms per volt, or higher sensitivity to measure the AC voltage drop across the resistor. (see diagram) Move the resistor connection to each exposed metal part having a return path to the chassis (antenna, metal cabinet, screw heads, knobs and control shafts, escutcheon, etc.) and measure the AC voltage drop across the resistor. (This test should be performed with the power switch in both the on and off positions.)

A reading of 0.35 volt RMS or more is excessive and indicates a potential shock hazard which must be corrected before returning the unit to the owner.

SIMPON MODEL 229 ETC. FOR LEAKAGE TEST

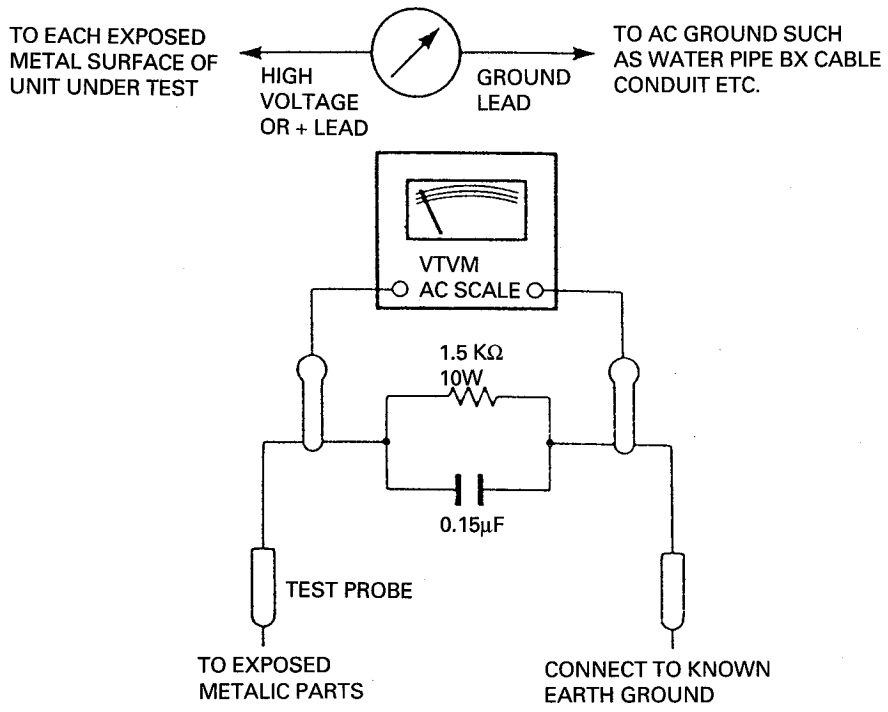

CONTROLS AND FUNCTIONS

STATION MEMORY BUTTON
Use this button to store an AM or FM frequency. Press this button and select one of 30 preset locations to store the frequency with the STATION PRESET buttons while the memory indicator, 'MEMORY' blinks.

STATION PRESET BUTTONS
Select one of 30 preset locations to recall the station stored in memory. The input function is automatically changed to TUNER when the button is pressed. When you select numbers from 10 through 29, you must select the second digit within about 2 seconds. To select preset 30, simply press "0".

PRESET SCAN BUTTON
Press this button to scan the preset station frequencies. The receiver stops at each preset location that contains a frequency for about 4 seconds, so you can hear a station. The preset location indicator blinks 4 times. Press this button again to stop scanning.

SURROUND-OFF MODE SELECTOR
Press this switch to select normal stereo mode.

PRO LOGIC MODE
Adjusts the surround delay time in steps. For Dolby Surround 20ms is standard

TEST TONE BUTTON
This button operates only in DOLBY PRO-LOGIC and DOLBY 3 STEREO mode. When the button is pressed, 2 seconds of test tone is generated in all channels (Left, Center, Right, and Surround) in succession. The display window shows TEST L, C, R and S in succession.

DISPLAY WINDOW
This window shows the state of operation for easier control of the receiver. It also contains the IR Remote Sensor.

FM MONO BUTTON
Press this button to select stereo or mono mode.

UP/DOWN TUNING BUTTONS
Press the DOWN button (v) to tune in lower frequency stations, the UP button (^) to tune in higher frequency stations. If you press the DOWN button when the display is at the bottom of the frequency range, the display returns to the top of the range. If you press the UP button when the display is at the top of the frequency range, the display returns to the bottom of the range. When the receiver finds a strong frequency, the display window shows 'TUNED'.

FM/AM BAND SELECTOR
Press these buttons to select the FM or AM radio band. When you select the AM or FM radio band, the receiver displays the last frequency selected on that band.

SEARCH SELECTOR
Press this button to select AUTO or MANUAL tuning.

VOLUME LEVEL INDICATOR
This indicator moves in accordance with the volume level. The indicator blinks when the mute button on the remote commander is pressed.

VOLUME CONTROL
Turn the VOLUME clockwise to increase the volume and counterclockwise to decrease it. The volume of the front, center, and rear channels is changed at the same time.

LOUDNESS BUTTON
Press this button to compensate for the response of the human ear at low listening levels (known as the Fletcher-Munson hearing curve). The high and low frequencies are automatically boosted when this button is pushed in. In the OFF position, the frequency response is flat at all volume levels. This button does not work at high volume levels.

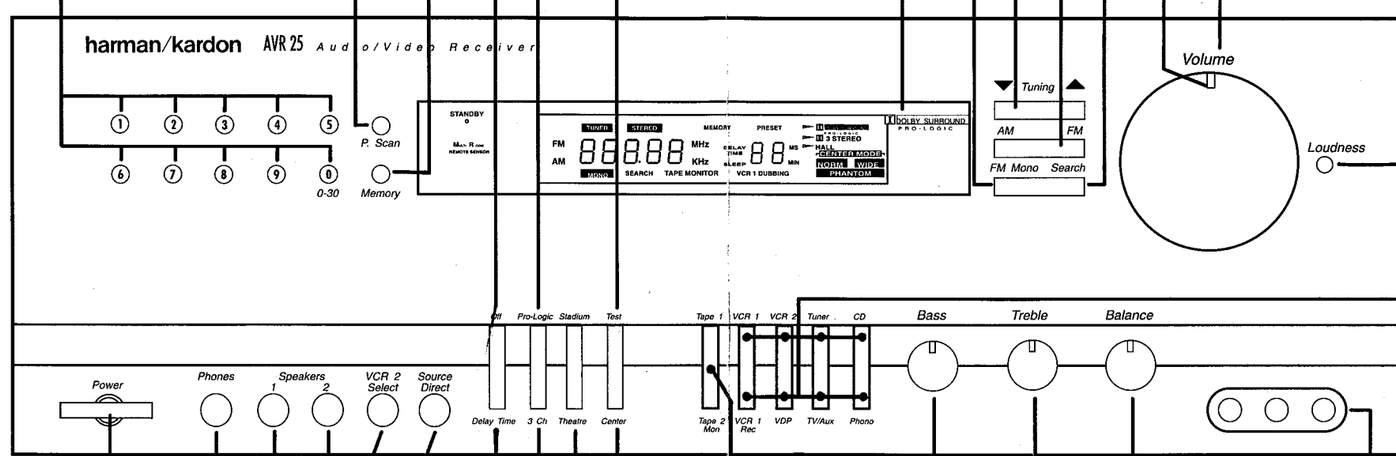

POWER BUTTON
Press this button to turn the power on. Press again to turn the power off. It can also be used as a system power button, if you connect the other components to the switched outlets.

HEADPHONE JACK
Stereo headphones can be plugged into this jack for private listening. Headphone impedance should be between 8 and 2K ohms. Best results between 200 and 400 ohms.

A/B SPEAKER SWITCHES
These switches allow you to select various combinations of speakers as follows;

VCR 2 SELECTOR
Push in this button to select the VCR 2 jacks on the front, rather than the VCR 2 jacks on the rear.

SOURCE/DIRECT BUTTON
This feature bypasses the tone control circuitry, resulting in flatter frequency response and wider bandwidth. When it is activated, "DIRECT" illuminates in the display.

DELAY TIME
Adjusts time delay between front and rear channels, operates only when the surround mode is on. (see Delay Time button on page 16).

3 CHANNEL MODE
The 3 channel mode can be used when rear speakers are not being used to provide a center (dialog) channel. Operates only when the Pro-logic mode is on.

STADIUM/THEATER MODE
Switches for selecting desired surround mode; Stadium or Theater.
See Surround Sound Effects on page 13.

TAPE 2 MONITOR BUTTON
Set TAPE 2 MONITOR to the "off" position when you want to hear the other input functions. Press this button to monitor the cassette deck connected to the TAPE 2 MON input jacks. TAPE 2 MONITOR is released when you change the input function.

CENTER MODE SELECTOR
This button operates only in DOLBY PRO-LOGIC and DOLBY 3 STEREO mode. The mode changes as below, when the button is pressed in succession.

BALANCE CONTROL
This control is used for balancing the relative sound volume of the left and right channel speakers. Clockwise rotation reduces the volume from the left speaker, counterclockwise rotation reduces the volume from the right speaker.

TREBLE CONTROL
Modifies the high-frequency sound of the left and right channels as much as +/- 10dB. Set this control at a suitable position for your taste and room acoustics.

BASS CONTROL
Modifies the low-frequency sound of the left and right channels as much as +/- 10dB. Set this control at a suitable position for your taste and room acoustics.

INPUT FUNCTION SELECTOR
Press the button to select the desired input function: VCR 1, VCR 2, VDP, TAPE 1, TV/Aux, Tuner, CD or Phono. Select the VCR 2 on the rear panel or on the front panel with the VCR 2 selector button.

VCR 2/CAMCORDER INPUT JACKS
VIDEO IN:
Connect to the VIDEO OUTPUT jack of a VCR (yellow jack).

CONTROLS AND FUNCTIONS

STATION MEMORY BUTTON
Use this button to store an AM or FM frequency. Press this button and select one of 30 preset locations to store the frequency with the STATION PRESET buttons while the memory indicator, 'MEMORY' blinks.

PRESET SCAN BUTTON
Press this button to scan the preset station frequencies. The receiver stops at each preset location that contains a frequency for about 4 seconds, so you can hear a station. The preset location indicator blinks 4 times. Press this button again to stop scanning.

SURROUND-OFF MODE SELECTOR
Press this switch to select normal stereo mode.

PRO LOGIC MODE
Adjusts the surround delay time i
steps. For Dolby Surround 20ms
standard

TEST TONE BU
This button operates on
PRO-LOGIC and DOLB
mode. When the buttor
seconds of test tone is
channels (Left, Center,
Surround) in successior
window shows TEST L,
succession.

STATION PRESET BUTTONS
Select one of 30 preset locations to recall the station stored in memory. The input function is automatically changed to TUNER when the button is pressed. When you select numbers from 10 through 29, you must select the second digit within about 2 seconds. To select preset 30, simply press "0".

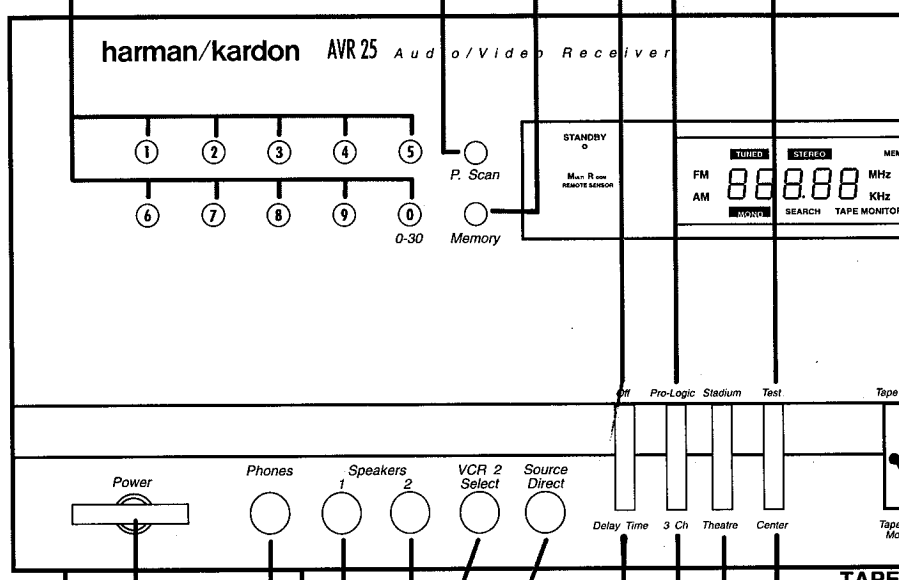

TAPE BUTTON
Set TAPE 2
position whe
other input f
to monitor th
to the TAPE
TAPE 2 MO
you change

CENTER M SELECTOR
This button operat
PRO-LOGIC and
mode. The mode
when the button is
succession.

POWER BUTTON
Press this button to turn the power on. Press again to turn the power off. It can also be used as a system power button, if you connect the other components to the switched outlets.

HEADPHONE JACK
Stereo headphones can be plugged into this jack for private listening. Headphone impedance should be between 8 and 2K ohms. Best results between 200 and 400 ohms.

A/B SPEAKER SWITCHES
These switches allow you to select various combinations of speakers as follows;

3 CHANNEL MOD
The 3 channel mode can be u
when rear speakers are not be
to provide a center (dialog) ch
Operates only when the Pro-lo
mode is on.

VCR 2 SELECTOR
Push in this button to select the VCR 2 jacks on the front, rather than the VCR 2 jacks on the rear.

SOURCE/DIRECT BUTTON
This feature bypasses the tone control circuitry, resulting in flatter frequency response and wider bandwidth. When it is activated, "DIRECT" illuminates in the display.

DELAY TIME
Adjusts time delay between front and rear channels, operates only when the surround mode is on. (see Delay Time button on page 16).

STADIU MODE
Switches for s
mode; Stadiun
See Surround

D-OFF MODE

to select normal

LOGIC MODE

e surround delay time ir
Dolby Surround 20ms is

TEST TONE BUTTON

his button operates only in DOLBY
RO-LOGIC and DOLBY 3 STEREO
ode. When the button is pressed, 2
econds of test tone is generated in all
hannels (Left, Center, Right, and
urround) in succession. The display
indow shows TEST L, C, R and S in
uccession.

FM MONO BUTTON

Press this button to select stereo or mono mode.

DISPLAY WINDOW

This window shows the state of operation for easier control of the receiver. It also contains the IR Remote Sensor.

UP/DOWN TUNING BUTTONS

Press the DOWN button (v) to tune in lower frequency stations, the UP button (^) to tune in higher frequency stations. If you press the DOWN button when the display is at the bottom of the frequency range, the display returns to the top of the range. If you press the UP button when the display is at the top of the frequency range, the display returns to the bottom of the range. When the receiver finds a strong frequency, the display window shows 'TUNED'.

FM/AM BAND SELECTOR

Press these buttons to select the FM or AM radio band. When you select the AM or FM radio band, the receiver displays the last frequency selected on that band.

SEARCH SELECTOR

Press this button to select AUTO or MANUAL tuning.

VOLUME LEVEL INDICATOR

This indicator moves in accordance with the volume level. The indicator blinks when the mute button on the remote commander is pressed.

VOLUME CONTROL

Turn the VOLUME clockwise to increase the volume and counterclockwise to decrease it. The volume of the front, center, and rear channels is changed at the same time.

LOUDNESS BUTTON

Press this button to compensate for the response of the human ear at low listening levels (known as the Fletcher-Munson hearing curve). The high and low frequencies are automatically boosted when this button is pushed in. In the OFF position, the frequency response is flat at all volume levels. This button does not work at high volume levels.

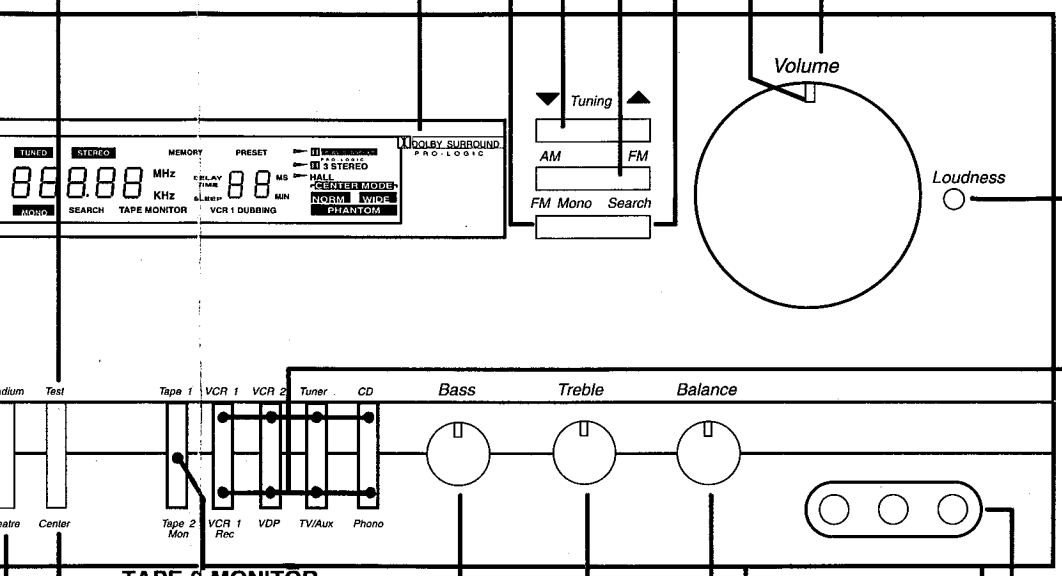

INPUT FUNCTION SELECTOR

Press the button to select the desired input function: VCR 1, VCR 2, VDP, TAPE 1, TV/Aux, Tuner, CD or Phono. Select the VCR 2 on the rear panel or on the front panel with the VCR 2 selector button.

TAPE 2 MONITOR BUTTON

Set TAPE 2 MONITOR to the "off" position when you want to hear the other input functions. Press this button to monitor the cassette deck connected to the TAPE 2 MON input jacks. TAPE 2 MONITOR is released when you change the input function.

CENTER MODE SELECTOR

This button operates only in DOLBY PRO-LOGIC and DOLBY 3 STEREO mode. The mode changes as below, when the button is pressed in succession.

CHANNEL MODE

annel mode can be used
r speakers are not being used
e a center (dialog) channel.
only when the Pro-logic
on.

and
the
Time

STADIUM/THEATER MODE

Switches for selecting desired surround mode; Stadium or Theater.
See Surround Sound Effects on page 13.

BALANCE CONTROL

This control is used for balancing the relative sound volume of the left and right channel speakers. Clockwise rotation reduces the volume from the left speaker, counterclockwise rotation reduces the volume from the right speaker.

TREBLE CONTROL

Modifies the high-frequency sound of the left and right channels as much as +/- 10dB. Set this control at a suitable position for your taste and room acoustics.

BASS CONTROL

Modifies the low-frequency sound of the left and right channels as much as +/- 10dB. Set this control at a suitable position for your taste and room acoustics.

VCR 2/CAMCORDER INPUT JACKS

VIDEO IN:

Connect to the VIDEO OUTPUT jack of a VCR (yellow jack).

DISASSEMBLY PROCEDURES

MODEL NO. : AVR-25

NOTE : The item numbers given in the following procedures refer to the exploded view and parts list.

[1] Cover top removal

1. Remove 6 screws (S2) from the sides of chassis.
2. Remove 2 screws (S1) from the chassis back (item #56).
3. Carefully lift the cover top to remove.

[2] Cover bottom removal

1. Remove 9 screws (S3) from the chassis.
2. Carefully lift the cover bottom (item #56) to remove.

[3] Panel Front Assembly removal

1. Remove the cover top.
2. Remove 4 screws (S3) from the chassis front (item #36).
3. Remove 4 screws (S5) from both side of the chassis front (item # 36).
4. Remove the flat cable from wafer (CP502) on the volume PC Board.
5. Remove 1 screw (S5) from the chassis right (item #32) for remove the lug wire.
6. Remove the flat cable from wafer (CP802) on the Dolby PC Board.
7. Disconnect CP401 and CP581 from the Dolby PC Board.
8. Remove the flat cable from wafer (CNTP803) on the tuner PC Board.
9. Disconnect CP291 from the tuner PC Board.
10. Disconnect CP402 from the main PC Board.
11. Disconnect CP801 from the power supply PC Board.

[4] Volume PC Board removal

1. Remove the panel front assembly.
2. Pull out the main volume knob with LED PC Board.
3. Remove the hex nut from the volume-motor to remove the volume PC Board.
4. Remove 2 screws (S1) from the panel front (item #2).
5. Pull the volume PC Board from the panel front assembly to remove.

[5] Headphone PC Board Removal

1. Remove the panel front assembly.
2. Remove 2 screws (S1) from the panel front (item #2) to release the headphone PC Board.

[6] Tone PC Board Removal

1. Remove the panel front assembly.
2. Pull the knobs (bass, treble, balance) out from the panel front assembly.
3. Remove the hex nut from the variable resistors (item #19 and #20).
4. Remove 4 screws (S1).

[7] Front PC Board Removal

1. Remove the panel front assembly.
2. Remove 11 screws (S1) holding the front PC Board to the panel front (item #2).

[8] Tuner PC Board Removal

1. Remove the cover top.
2. Remove the panel front assembly.
3. Disconnect CP103, CP601, CP101, CP104, CP704 and CP106 on the tuner PC Board.
4. Disconnect CP901 and CP902 on the tuner PC Board.
5. Remove 2 screws (S5) from the tuner PC Board.
6. Remove 8 screws (S9) from the chassis back (item #56).

[9] Dolby PC Board Removal

1. Remove the cover top.
2. Remove the panel front assembly.
3. Unjoin 2 fastener (item #37) for remove the Dolby PC Board.
4. Remove the flat cable CN501 on the Dolby PC Board.
5. Disconnect CP601 from the Dolby PC Board.

[10] Surround PC Board Removal

1. Remove the cover top.
2. Remove the cover bottom.
3. Remove the panel front assembly.
4. Remove the Dolby PC Board.
5. Disconnect CP602 from the power supply PC Board.
6. Remove 1 screw (S5) from the bottom of Chassis front (item #36).
7. Remove 6 screws (S1) from the chassis front (item #36)
8. Remove the chassis front.
9. Remove 2 screws (S5) from the heatsink (item #38).

11 Chassis back Removal

1. Remove the cover top.
2. Remove the cover bottom
3. Do steps 8, 9 and 10.
4. Unsolder the solder pins to remove the power cord (item #59).
5. Remove 1 screw (S1) from the bottom of chassis left (item #41) and Remove 4 screws (S1) from chassis back.
6. Remove 19 screws (S9) and 2 screws (S10: PHONO and MONITORS) holding the chassis back.

12 Main PC Board Removal

1. Remove the cover top.
2. Remove the cover bottom.
3. Remove the panel front assembly.
4. Remove the chassis back.
5. Unsoler all leads of Q262L/R, Q263L/R, Q270L/R, Q262C, Q263C, Q270C and IC241 from copper track on the main PC Board.
6. Disconnect CP101 from the power supply PC Board.
7. Disconnect CP241 from the power transformer.
8. Remove 2 screws (S5) from the main PC Board.

13 Power Supply PC Board Removal

1. Remove the cover top.
2. Disconnect CP801 from front P.C. Board
3. Disconnect CP602 from the surround P.C. Board.
4. Disconnect CP101 from the power supply P.C. Board.
5. Disconnect CN704 from the tuner P.C. Board.
6. Disconnect CP701, CP702 and CP703 from the transformer.
7. Unsolder 2 leads of the AC-cord (item #59). from neutral and live on the power supply PC Board.
8. Remove 2 screws (S5) from the power supply PC Board.
9. Remove 2 screws (S9) from the chassis back.

ALIGNMENT PROCEDURES

Equipment Required

- AM signal generator
- Oscilloscope
- AC voltmeter
- FM signal generator
- Stereo modulator
- Audio generator
- Distortion meter
- DC voltmeter

Note: Remove line cord antenna from FM external antenna terminal when aligning.

Alignment and Test Points (Tuner P.C. Board)

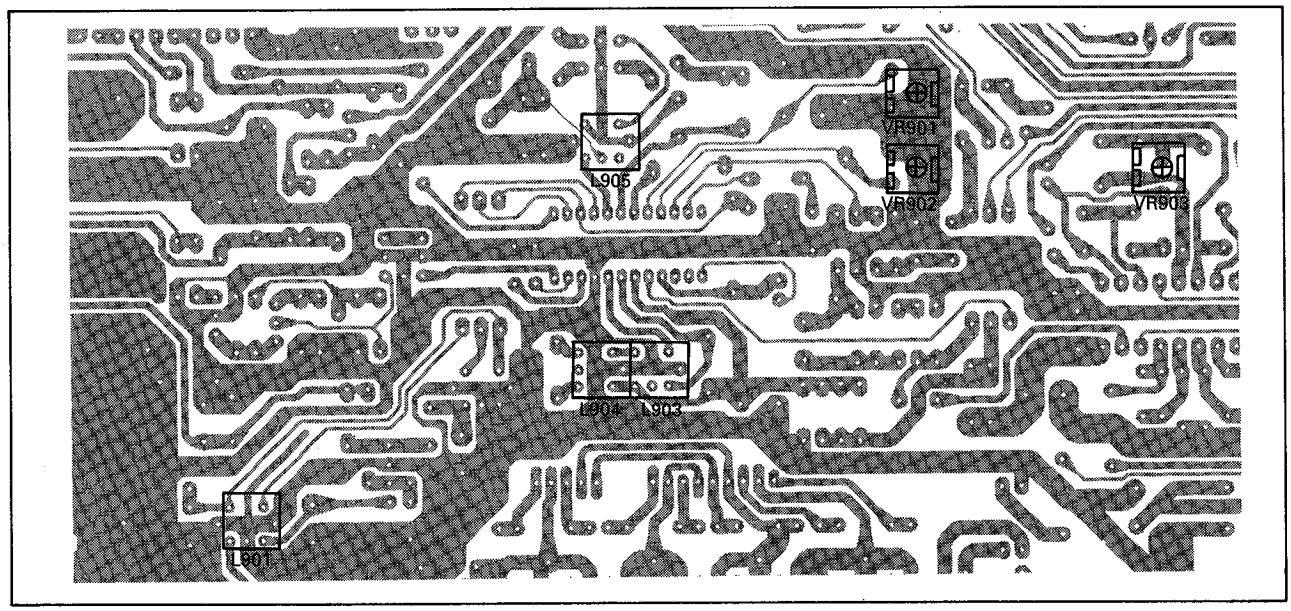

AM IF and RF Alignment

Preparation

1. Output of signal generator should not be higher than necessary to obtain an optimum output. reading.
2. Signal generator modulation: 30%.
3. Switch: Press to AM.

Step	Signal Generator Frequency	Receiver Frequency on the Display	Equipment Connection	Adjustment Point	Adjust for
1	450 kHz (400 Hz, Mod.)	Place at non-interference spot around 600 kHz	AC voltmeter to TAPE OUT jack.	L905 (IFT)	Maximum reading
2	600 kHz (400 Hz, Mod.)	600 kHz	Same as step 1.	L901 (ANT Coil)	Same as step 1
3	1400 kHz (400 Hz, Mod.)	1400 kHz	Same as step 1.	TC901 (ANT Trimmer)	Same as step 1
4	1000 kHz (400 Hz, Mod.)	1000 kHz	FL display TUNED indicator	VR901	Indication on receiver with output of 500 µV/m

FM IF Alignment

Preparation

1. Signal Generator output should be no higher than necessary to obtain an optimum output reading.
2. Switch: Press to FM.
3. Signal generator deviation : 75 kHz.
4. Be sure to disconnect FM line cord antenna during alignment.

Step	Signal Generator Frequency	Receiver Frequency Display	Equipment Connection	Adjustment Point	Adjust for
1	98.1 MHz (1 kHz, Mod.)	98.1 MHz	Distortion meter to TAPE OUT jack	L904	Minimum distortion
2	98.1 MHz (1 kHz, Mod.)	98.1 MHz	Same as step 1.	VR902	Zero reading on AC voltmeter with SSG output level of 6 μV

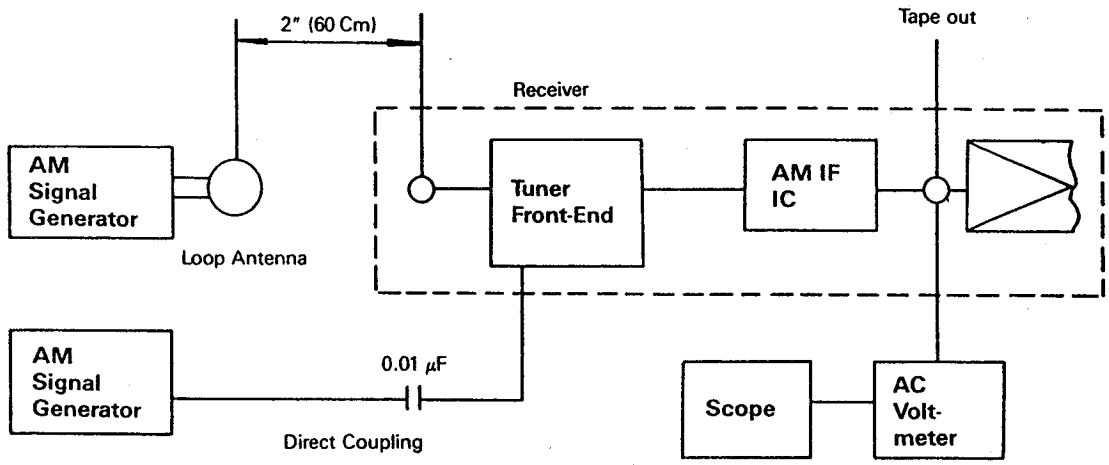

AM Alignment Connection

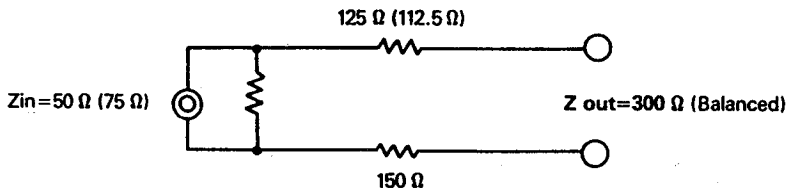

FM dummy antenna to 300 Ω antenna terminal of receiver

FM Dummy Antenna

MPX Alignment

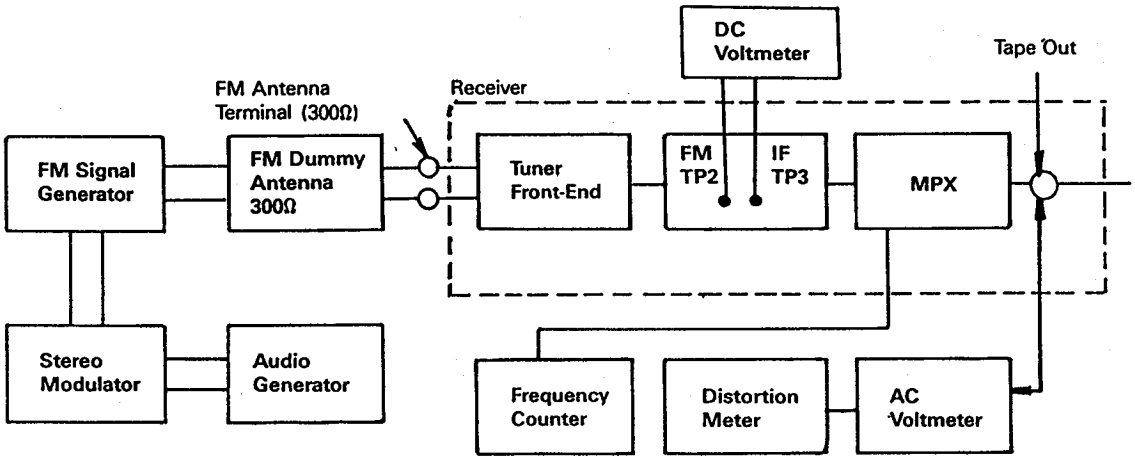

FM RF/IF and MPX Alignment Connection

Preparation
1. Switch: press to FM.
2. Tune for 98 MHz on band.
3. Signal generator output level: 1000 μV.
4. Deviation: 75 kHz, at 100 % modulation of composite signal.
5. Connect signal generator to FM antenna terminal through FM dummy antenna (300 Ω).

Step	19 kHz Modulation Level	Signal Generator Frequency Setting	Output Indicator Connection	Adjust	Adjust for
1	8 % mod.	Composite to channel 1kHz R	AC voltmeter to TAPE OUT jack of R channel	–	Adjust for about 450 mV of audio output
2	8 % mod.	Composite to channel 1kHz L	AC voltmeter to TAPE OUT jack of R channel	VR903	AC voltmeter reading should be at least 33 dB below
3	8 % mod.	Composite to channel 1kHz R	AC voltmeter to TAPE OUT jack of L channel	VR903	Same as step 2.
If you could not obtain -35 dB readings in steps 2 and 3 (compared with step 1), readjust VR903 until you obtain -33 dB readings for both steps 2 and 3. Nominal is -43 dB.					

CIRCUIT DESCRIPTION

CPU (IC801) : CXP82220 –107Q (8 bit SINGLE-CHIP MICROCOMPUTER)

1. Pin Connection Diagram

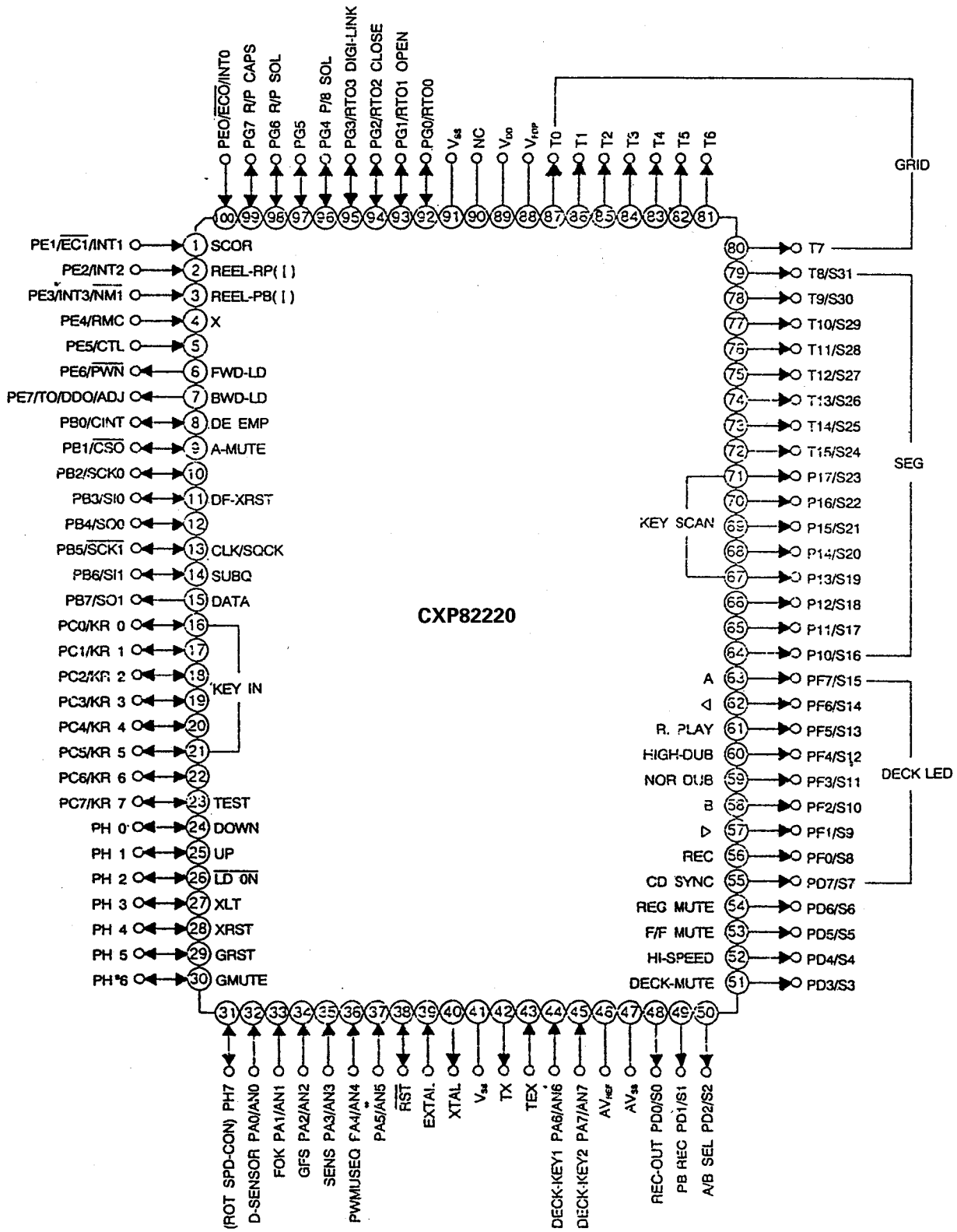

2. Block Diagram

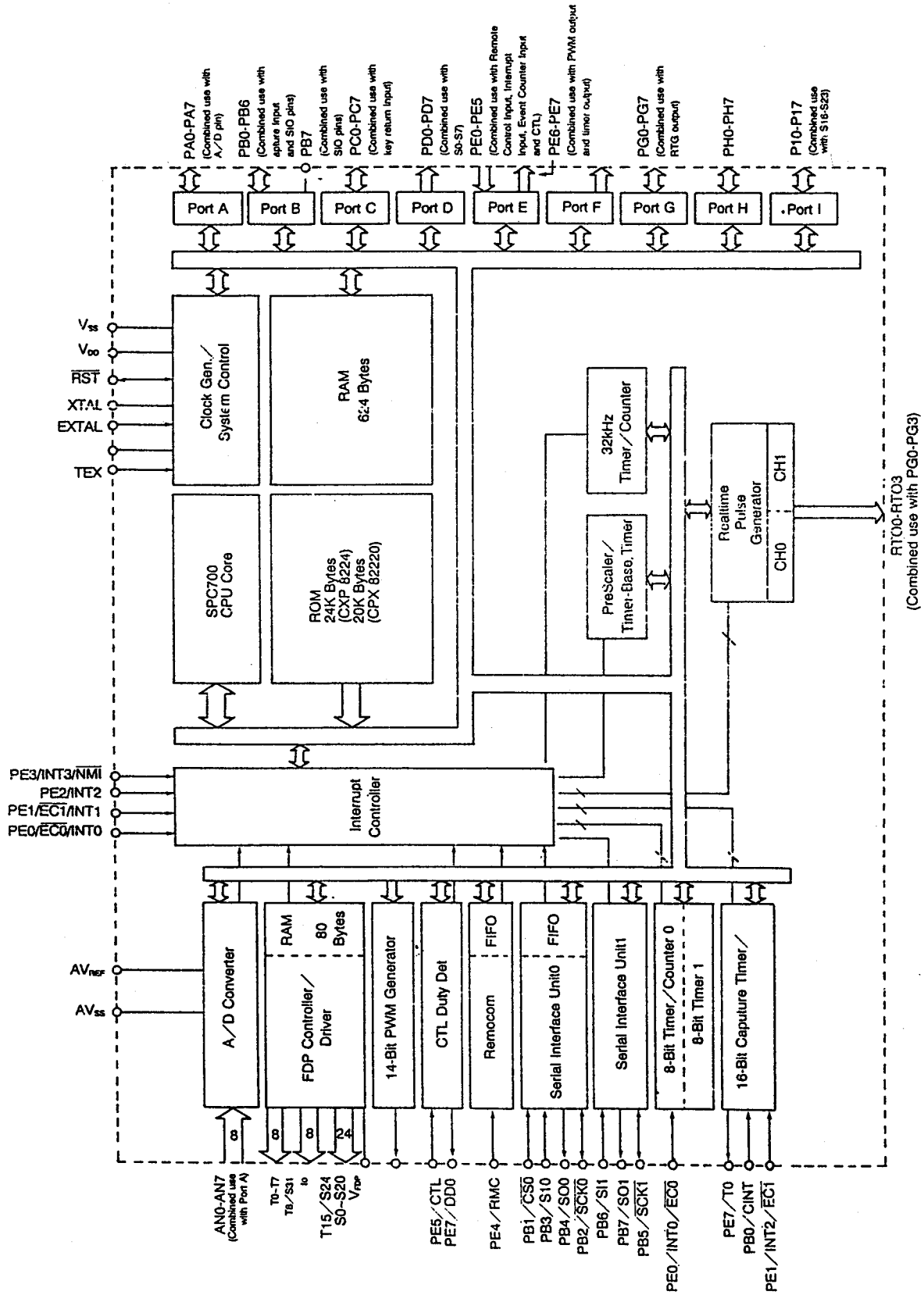

3. Pin Functions

Symbol	Input/Output		Functions	
PA0/AN0 to PA7/AN7	I/O/Analog Input	(Port A) B-bit I/O port. Each bit can be individually specified as input or output. (8 pins)	A/D converter analog input pins.	
PB0/CINT	I/O/Input	(Port B) 8-bit I/O port. The low 7 bits can be individually specified as input or output. The most significant bit (PB7) is output only. (8pins)	16-bit timer/counter external capture input pin	
PB1/$\overline{\text{CSO}}$	I/O/Input		Serial inter face(CH0) chip select input pin.	
PB2/$\overline{\text{SCKO}}$	I/O/I/O		Serial data (CH0) I/O pin.	
PB3/S10	I/O/Input		Serial data (CH0) input pin.	
PB4/SO0	I/O/Output		Serial data (CH0) output pin.	
PB5/$\overline{\text{SCK1}}$	I/O/I/O		Serial clock (CH1) I/O pin.	
PB6/SI1	I/O/Input		Serial data (CH1) input pin.	
PB7/SO1	Output/Output		Serial data (CH1) output pin.	
PC0/KR0 ~ PC7/KR7	I/O/Input	(port C) 8-bit I/O port. Each bit can be individually specified as input or output. Each can drive a 12 mA sink current. (8 pins)	Key return input pins for performing key scans with the FDP segment signals.	
PD0/S0 ~ PD7/S7	Output/Output	(Port D) 8-bit output port. (8 pins)	FDP segment signal output pins.	
PE0/INT0/$\overline{\text{EC0}}$	Input/Input/Input	(Port E) 8-bit input/output port. The low 6 bits are inputs, and the high 2 bits are outputs. (8 pins)	External interrupt request input pins. (4 pins)	Timer/counter external event input pins. (2 pins)
PE0/INT0/$\overline{\text{EC1}}$	Input/Input/Input			
PE2/INT2	Input/Input			
PE3/INT3/$\overline{\text{NMI}}$	Input/Input/Input			
PE4/$\overline{\text{RMC}}$	Inupt/Input			Non-maskable interrupt request input pin.
PE5/CTL	Input/Input		Remote control unit receive circuit input pin.	
PE6/$\overline{\text{PWM}}$	Output/Output		14-bit PWM output pin.	
PE7/TO/DD0/ADJ	Output/Output Output/Output		16-bit timer/counter square wave output pin. CTL duty detection output pin, and pin for frequency division output of 32 kHz oscillator	
PF0/S8 ~ PF7/S15	Output/Output	(Port F) 8-bit output port. (8 pins)		FDP segment signal output pins.

Symbol	Input/Output	Functions	
PG0/PT0 o ~ PG3/RT 03	I/O/Output	(Port G) 8-bit I/O port. Each bit can be individually specified as input or output. The lower four bits are output logically ORed with the RTO contents. (8 pins)	Realtime pulse generator (RTG) outputs. These function as high-precision realtime. pulse output ports. (4 pins)
PG4 ~ PG7	I/O		
PH0 ~ PH7	I/O	(Port H) 8-bit I/O port. Each bit can be individually specified as input or output. (8 pins)	
P10/S16 ~ P17/S23	Output/Output	(Port1) 8-bit output port. (8 pins)	FDP segment signal output pins.
T8/S31 ~ T15/S24	Output/Output	Dual-use output pins for FDP timing signals adn FDP segment signals.	
T0 ~ T7	Output	FDP timing signal output pins	
V_{FDP}		FDP voltage supply pin if an internal resistor was specified with a mask option.	
EXTAL	Input	Crystal interface pins for system clock oscillation. If the clock is supplied externally then it should be input to the EXTAL pin. The XTAL pin should then be left open	
XTAL	Output		
TEX	Input	Crystal interface pins for the 32 kHz timer/counter's oscillator. A 32-kHz liquid crystal oscillator is placed between TEX and TX. When used as an event input, connect the signal source to TEX, and leave TX open.	
TX			
$\overline{RST}$	I/O	System reset pin, active when "L"	
NC		This pin should be connected to V_{DD} during operation.	
AV_{REF}	Input	A/D converter reference voltage input pin.	
AV_{SS}		A/D converter ground pin.	
V_{DD}		Positive power supply pin.	
V_{SS}		GND pin.	

CONTROL KEY AND MODE SWITCH MATRIX

SEARCHING FOR STATION

Automatic Tuning

Press the AUTO SEARCH key for automatic tuning.
Pressing the TUNE △ or TUNE ▽ key causes automatic up or down searching for a station until a station is received.

Manual Tuning

By pressing the TUNE △ or TUNE ▽ key, the frequency is changed by a step. If the key is kept pressing scanning is continued until the key is released.

Memory

The tuning information is stored into an internal RAM by pressing the MEMORY key and the pressing one of 30 preset locations while the memory indicator 'MEMORY' blinks.
If no key is pressed while the indicator blinks, the memory function is canceled.

M1 to M10

Thirty AM and FM stations can be recalled from internal RAM. When It is is switched from one band to the other band, the tuner tunes to the station last tuned on that band. Each time a station is changed, the controller provides a signal to mute the tuner.

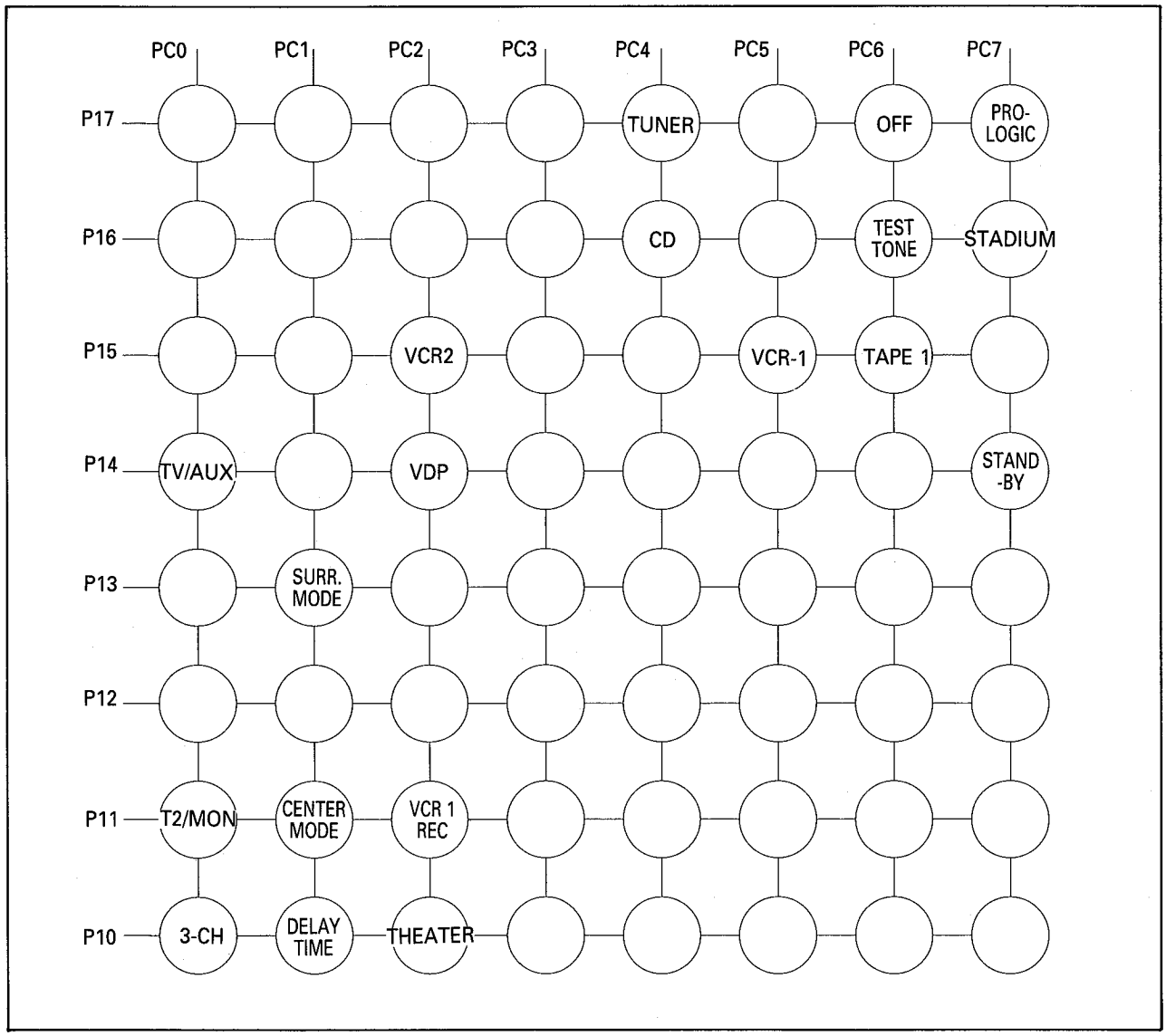

PROTECTION CIRCUITS

SPEAKER PROTECTION CIRCUITS

The CPU protects both this unit and the speakers when an abnormally high current flows in Q262 L/R/C and Q263 L/R/C due to excessive input drive, too low of a load impedance, or short of the speaker terminals. If current increase is excessive the voltage across R273 L/R/C or R274 L/R/C turns on Q264 L/R/C, then Q268 turns on Q269.
It makes the protection port of the CPU to low state, and the CPU turns unit to standby state.

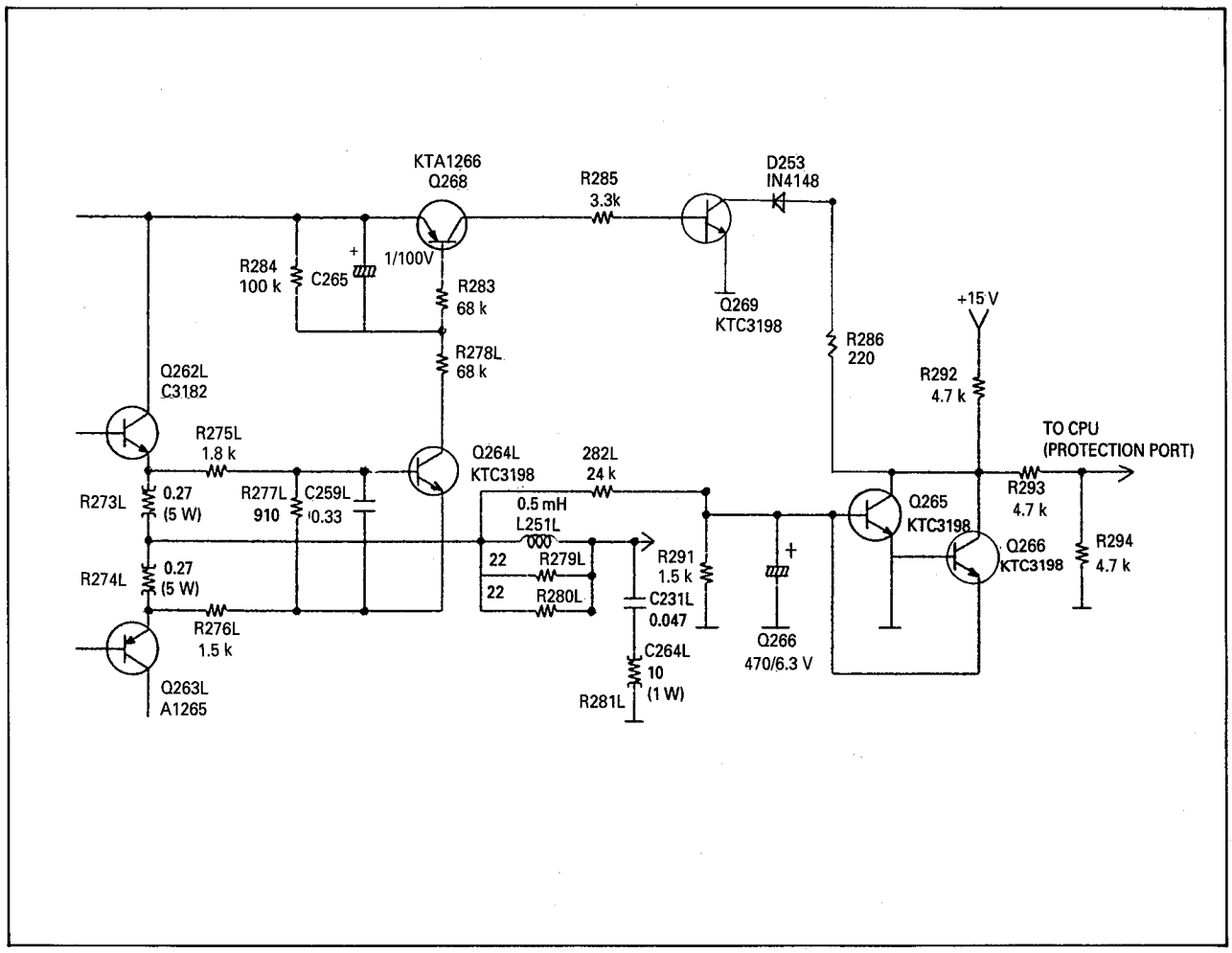

THERMAL PROTECTION CIRCUITS

This unit has a overload thermal protection circuits to guard against abnormal operation.
When the temperature of TRANS POSISTOR installed with the main transformer or H/SINK POSISTOR rises abnormally, the resistance of the posistor becomes larger and Q267 is turned on.
It makes the protection port of the CPU to Low state, and the CPU turns unit to standby state.

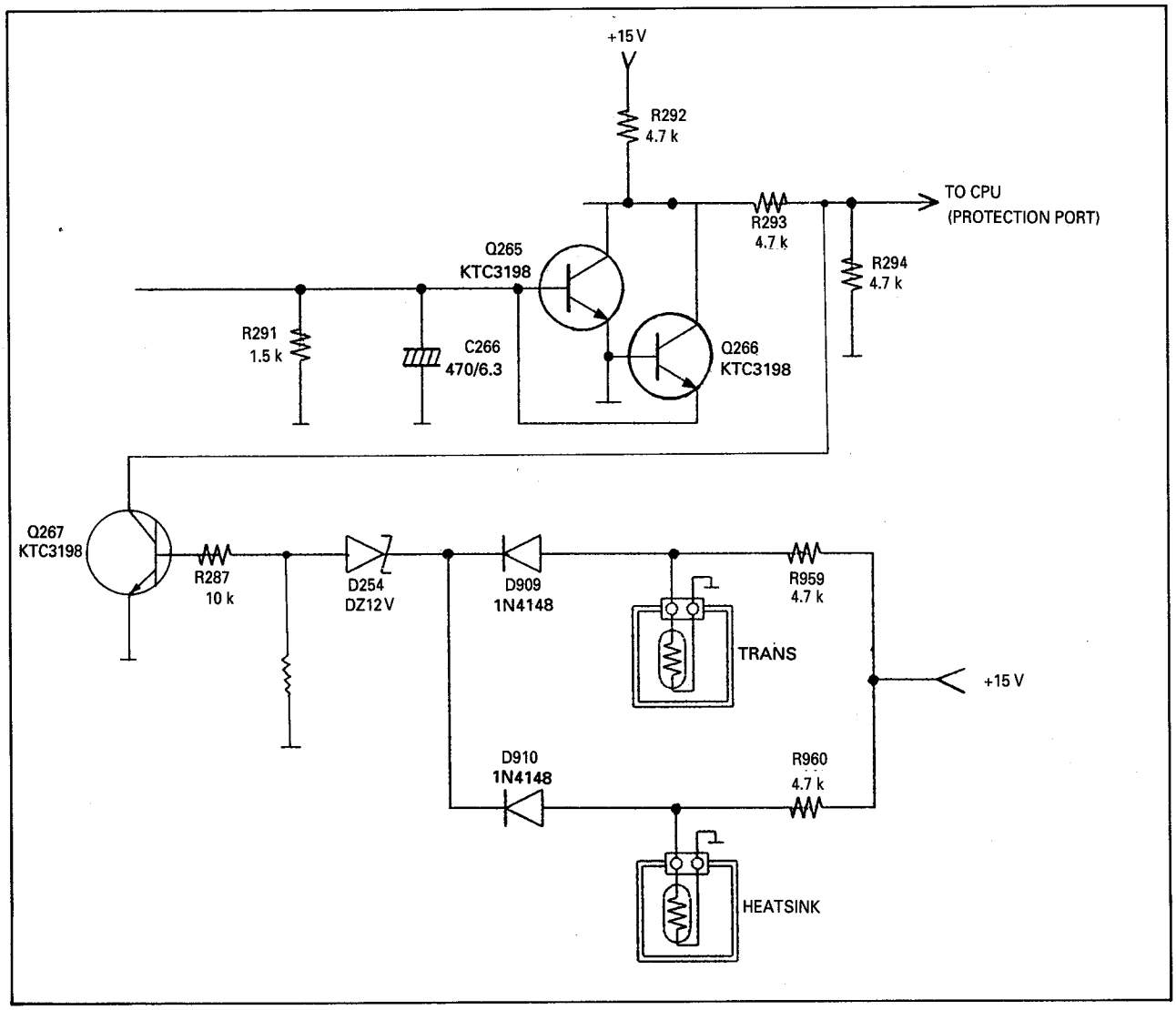

DIGITAL TUNING SYSTEM DESCRIPTION

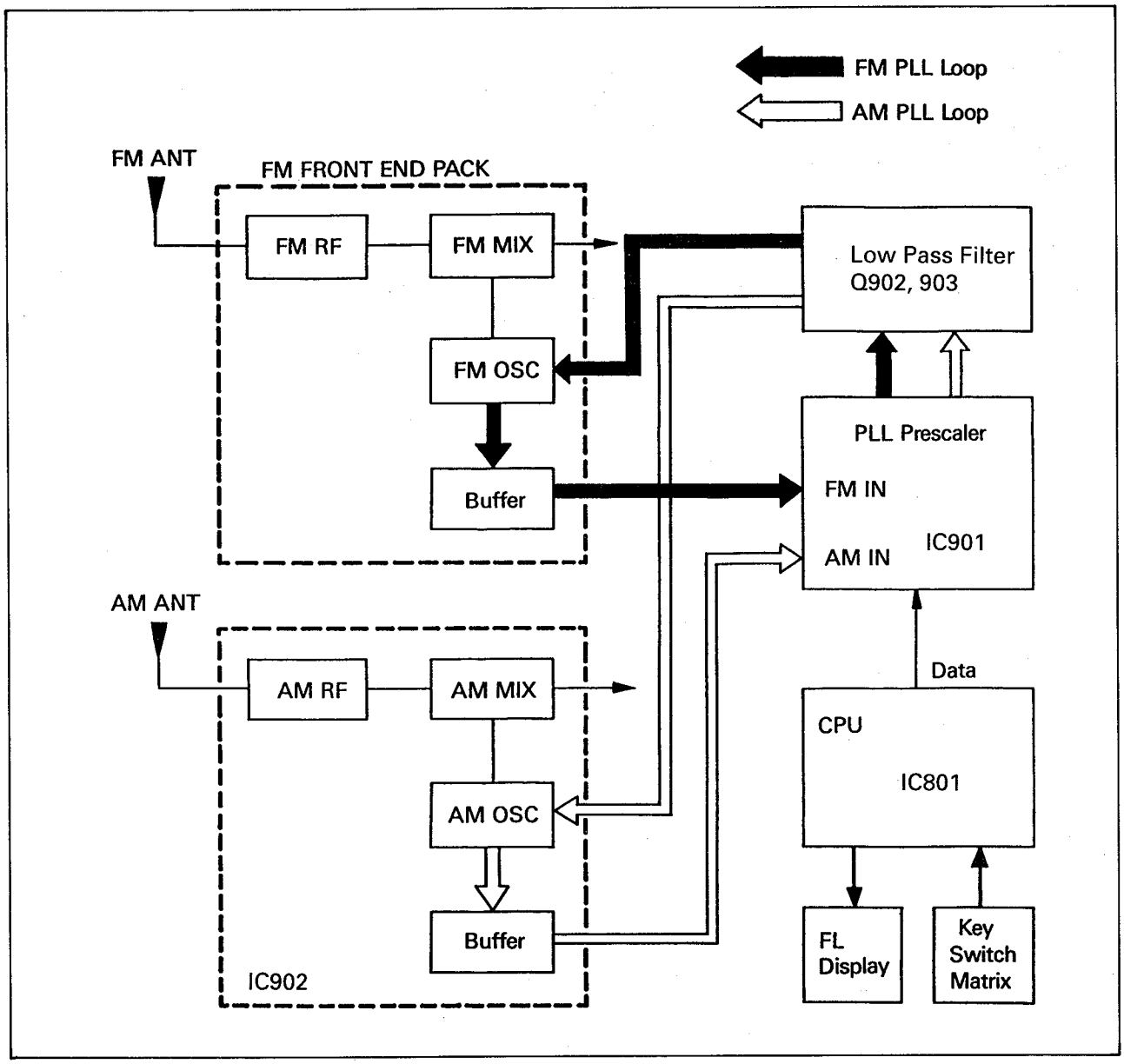

BLOCK DIAGRAM

Model: AVR-25
AVI-200

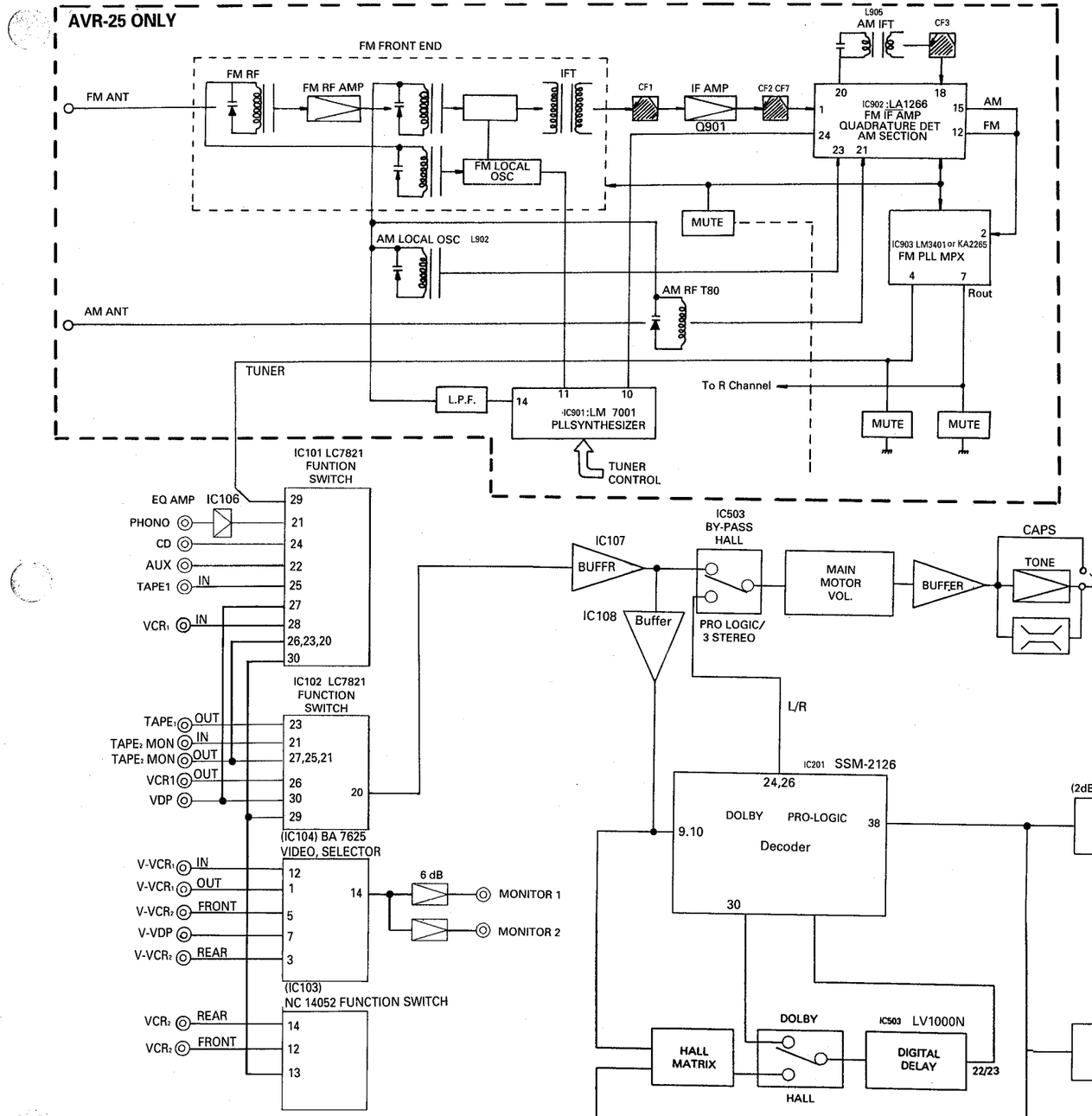

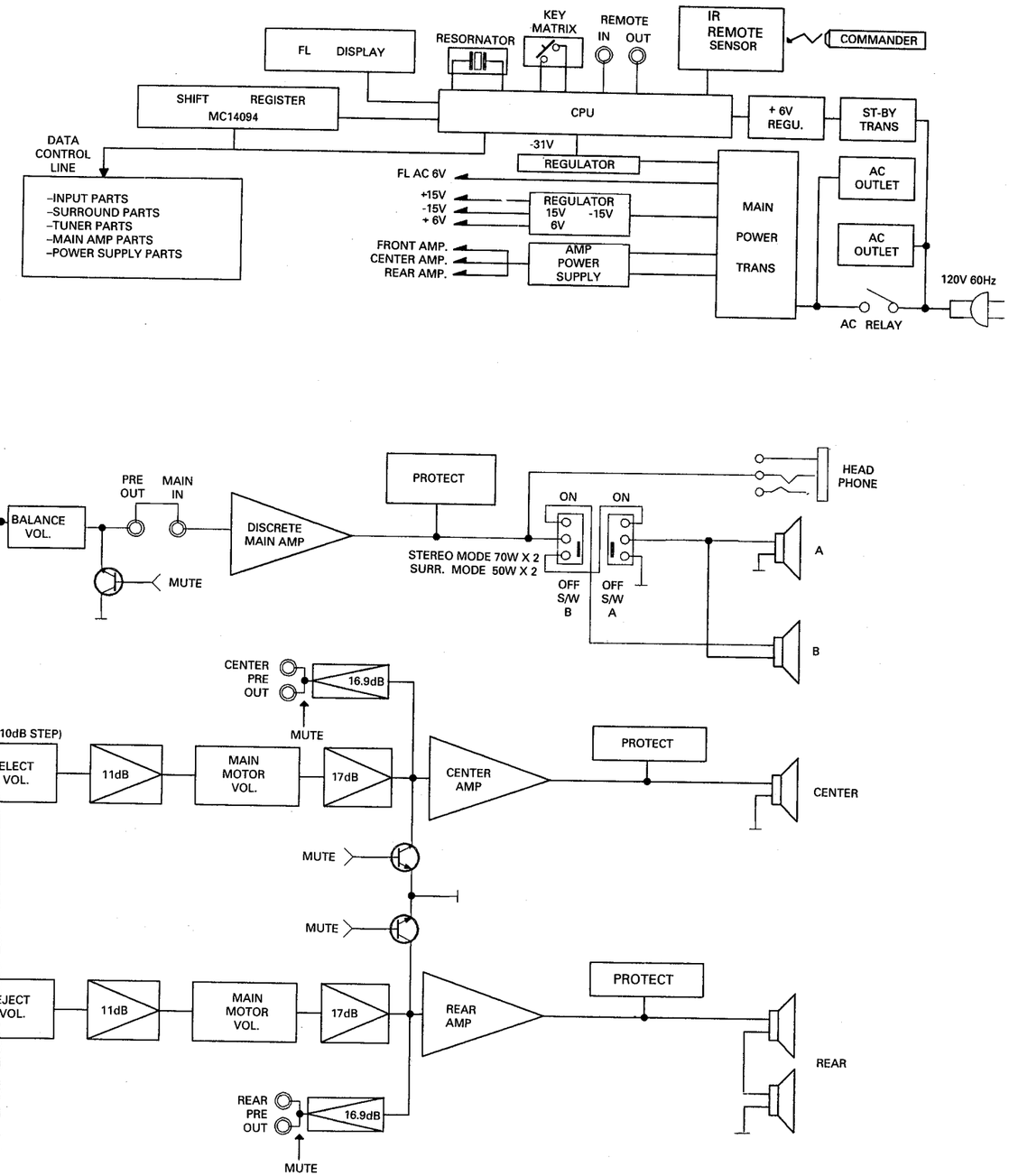

BLOCK DIAGRAM

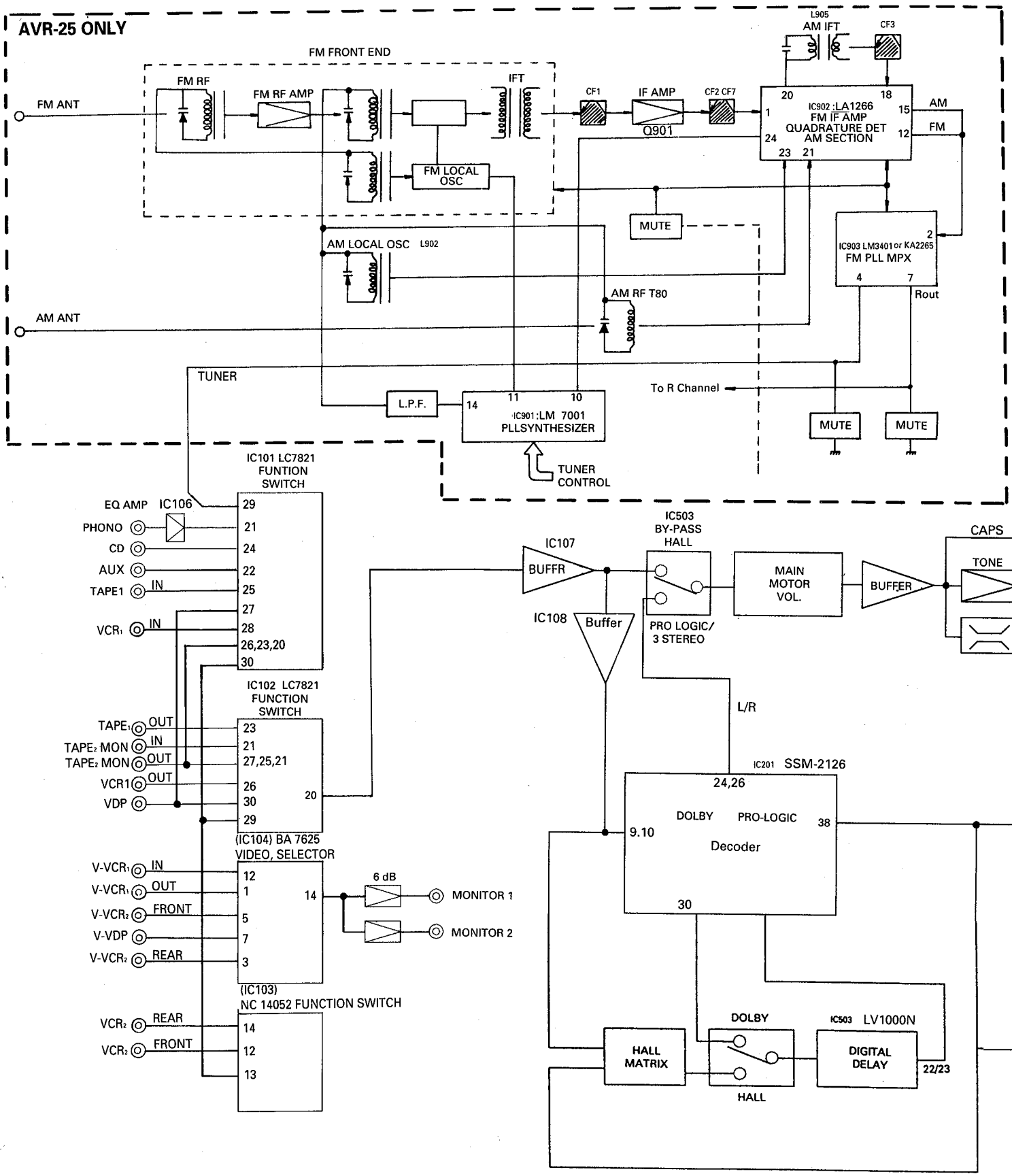

Model: AVR-25
AVI-200

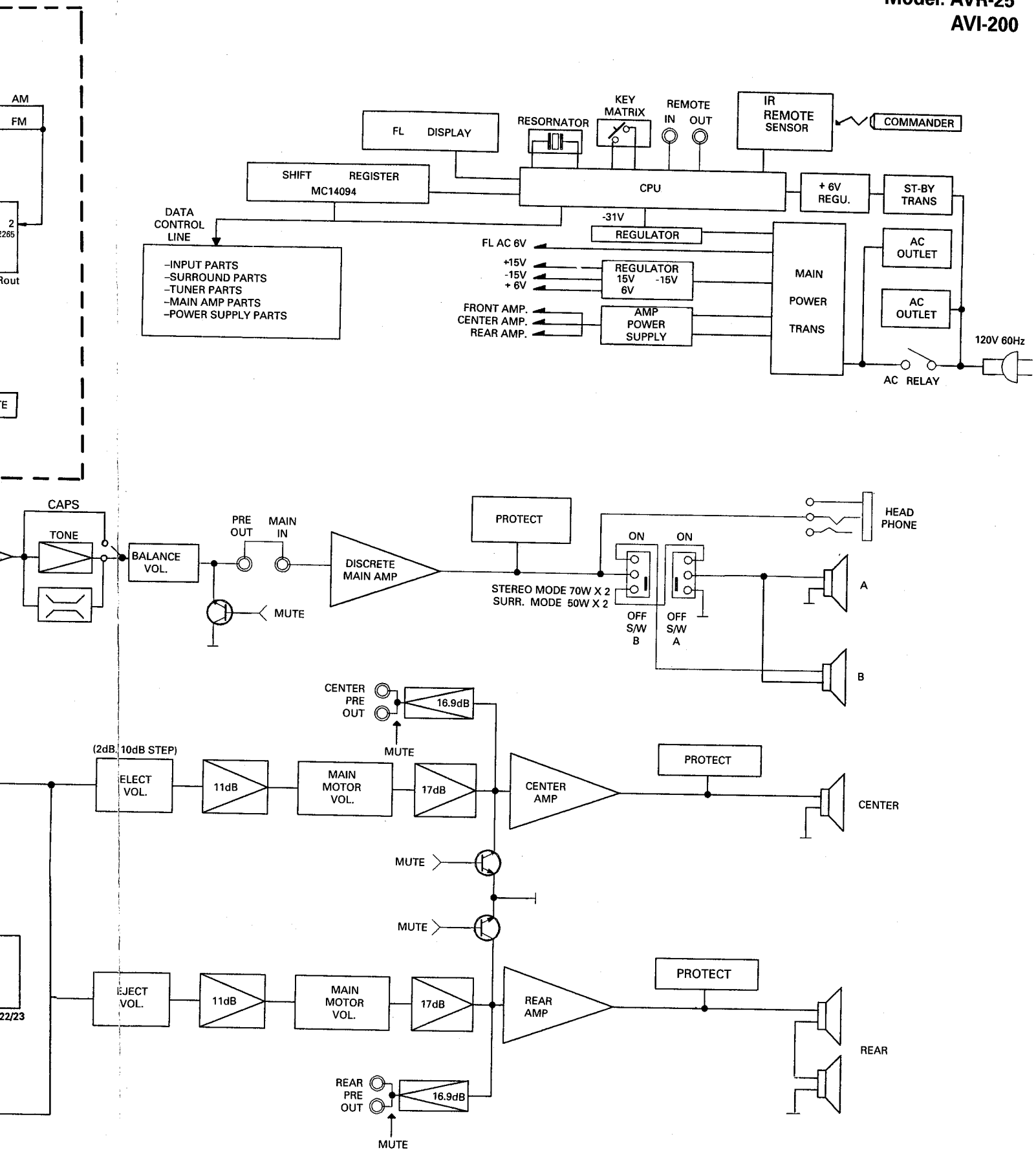

WIRING DIAGRAM

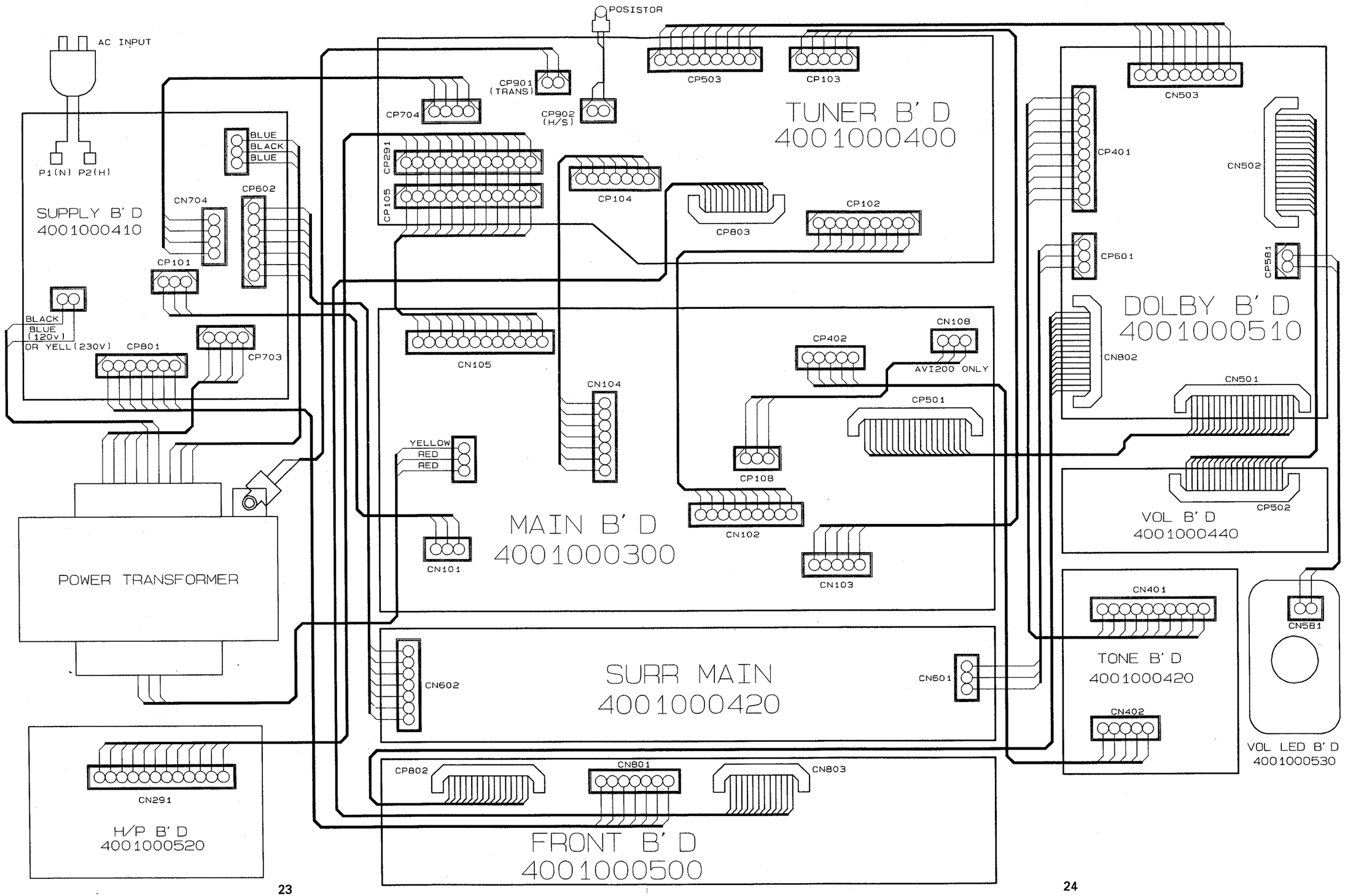

WIRING DIAGRAM

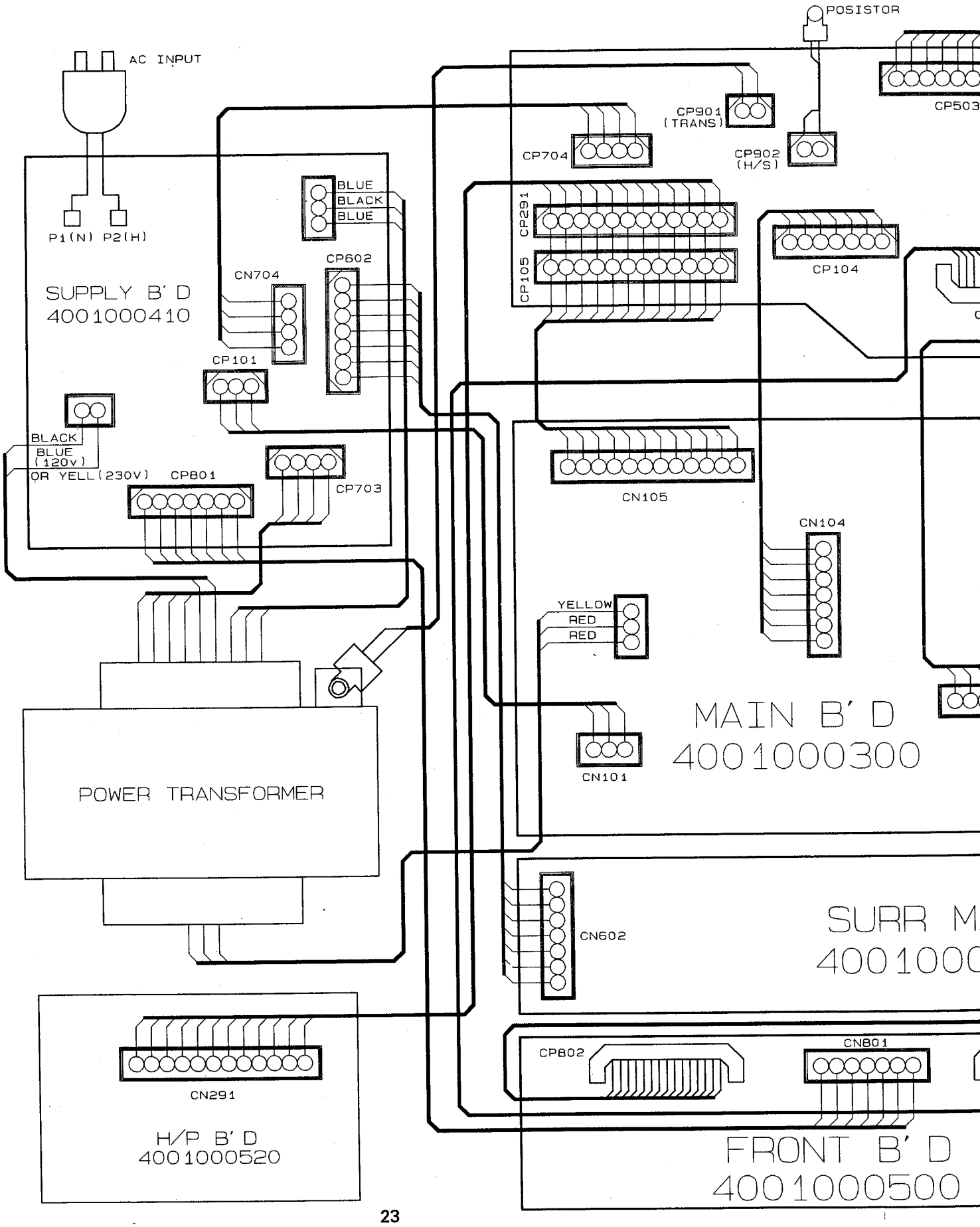

ISTOR

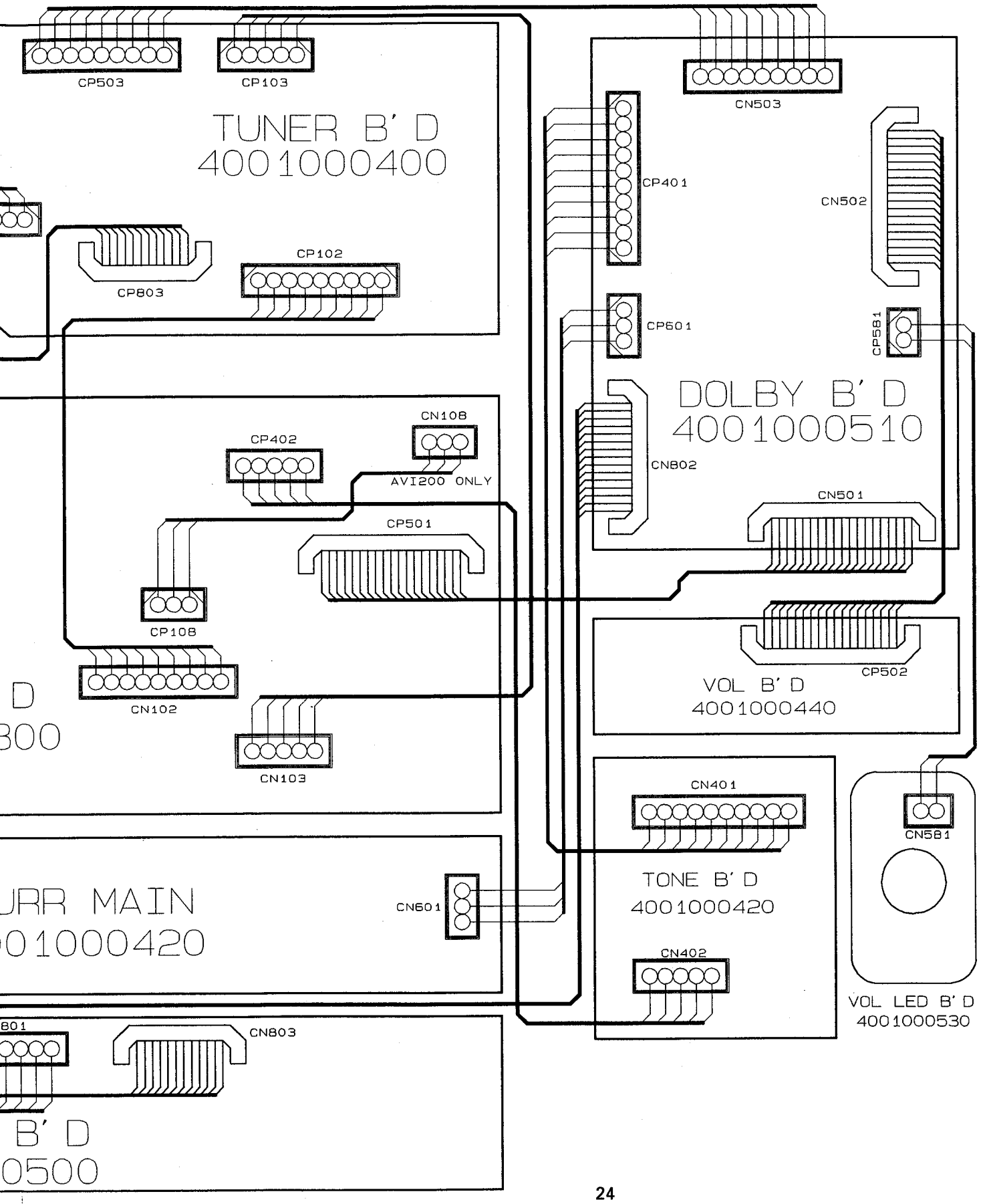
CP503
CP103
TUNER B' D
4001000400
CP803
CP102
CN503
CP401
CN502
CP601
CP581
DOLBY B' D
4001000510
CN802
CN501
CN108
CP402
AVI200 ONLY
CP501
CP108
CN102
CN103
CP502
VOL B' D
4001000440
CN401
TONE B' D
4001000420
CN402
CN581
VOL LED B' D
4001000530
CN601
URR MAIN
01000420
CN803
B' D
0500

TROUBLESHOOTING

Symptom	Cause and Remedy
Receiver inoperative (FL indicator does not light)	A) Faulty AC power cord. Replace. B) Defect the power switch. Replace. C) Broken wire in the power transformer. Replace the power transformer. D) Blown power Replace the fuse.
Fuse blows when power is turned on.	A) Defective power transformer. Replace. B) Short the primary or secondary of the transformer circintry. Repair the short. C) Damaged rectifier (D241 to D244) or damaged trans (Q262 and Q263). Replace the defective component(s). D) Short circuit in the amplifier circuit. Repair the short.
Power indicator lights but no sound from both channels	A) Speaker switch 1 or 2 defective. Replace the defective switch (es). B) Defect in transistor Q262L/R, Q263L/R on the Main Amp Board. Replace the defective component(s).
Speaker A inoperative	A) Speaker switch A defective. Replace
Speaker B inoperative	A) Speaker switch B defective. Replace.
Speaker works normally but headphones inoperative	A) Defective resistor R295L/R Replace.
PHONO input inoperative	A) Poor contact in phono input jack. Repair or replace the jack. B) Defective phono switch or IC106. Replace.
LOUDNESS has no effect	A) Defective loudness switch. Replace. B) Defective resistor R301L/R, C301L/R and C302L/R Replace the defective component(s).
FM inoperative	A) Defective front-end. (FE-901) Replace. B) Defective FM switch. Replace the switch

Symptom	Cause and Remedy
FM inoperative	C) Defective transistor Q901, Q904, Q905, IC901, IC902,IC903 Replace the defective transistor(s) or IC(s). D) Defective coil L903 or L904. Replace the coil(s). E) Defective lead-in. Repair or replace the lead-in. F) Ceramic filter CF901, CF902 defective. Replace the defective ceramic filter(s). G) Defective controller circuit component. Replace.
Poor multiplex separation	A) Improper adjustment. Readjust VR803. (Refer to MPX Alignment.) B) IC903 defective. Replace. C) Variable resistor VR803 defective. Replace the variable resistor.
STEREO indicator does not light	A) Defective indicator in FL. Replace. B) Improper adjustment of VR903 of tuner board. Make readjustment. C) Defective IC903 Replace the defective component.
FM volume not sufficient	A) If volume from both L and R channels is not loud enough : Front end Section defective. Faulty IC902, Coil L903 Defective C907 of tuner Board. If sound of one channel is not loud enough: Defective L906 L/R.
FM Mono has no effect	A) Defective FM MODE switch. Replace.
AM inoperative	A) Damaged IC902 of tuner board. Replace. B) Defective L901, L902, L905 or CF3 of tuner board. Replace the defective component(s). C) Resistor R915, R926 defective. Replace the defective component(s). D) Capacitor C906, C922, C926 defective. Replace the defective capacitor(s). E) Defective AM switch Replace. F) Defective varicap diode VD901, VD902. Replace varicap diode(s). G) Damaged AM loop antenna. Repair or replace. H) Defective controller circuit component. Replace.
Bass control has no effect	A) Variable resistor BASS defective. Replace. B) Defective R416L/R, R417L/R, R418L/R, C414L/R, C415L/R Replace the defective component(s).

Symptom	Cause and Remedy
Treble control has no effect	A) Variable resistor TREBLE defective. B) Defective C417L/R, C418L/R, R419L/R, R420L/R Replace the defective components(s).
Auto tune inoperative (UP/DOWN)	A) Poor contact in Up/Down key. Repair replace. B) Defective IC801 Replace. C) Defective FL Display Replace. D) Defective tuner circuit component. Replace. E) In case of FM only, improper adjustment of FM front-end. Readjust.
Manual tune inoperative (UP/DOWN) (AM or FM)	A) Poor contact in Up/Down key. Replace. B) Defective IC801. Replace.
Memory setting (keys 1-10) inoperative	A) Poor contact in memory keys 1-10. Replace. B) Poor contact in memory set key. Replace. C) Defective IC801. Replace the defective component.
FL inoperative	A) FL defective. Replace. B) Defective IC801. Replace C) Defective X-TAL 801. Replace.
Noise Volume control	A) Defective IC301. Replace. B) Defective capacitor C304 or C305 Replace the defective capacitor(s).
Remote Control Unit inoperative	A) Weak Battery. Replace. B) Defective. Replace. C) Defective IC801 or Sensor 801 (CPU Board) or IC01. Replace.

GENERAL UNIT PARTS LIST

Ref. No.	Description	Mfr. Part No.	Version
1	Panel Front, Aluminium, black	048602019311	
2	Body, Front, ABS, black	8521008910	
3	Window FL, Acryl, Dark Smoke	048553020111	
4	Filter, FL, PVC, Red	048535042611	
5	Knob, Volume, Aluminium, Black	048643006711	
6	Indicator, Volume, Acryl, Milk	8555049210	
7	Knob Rotary, ABS, Black	048545126311	
8	Button Power, ABS, black	048543061011	
9	Light Shield, PVC, Black	8535042910	
10	Indicator, Power, Acryl, Milk	8555048710	
11	Button Speaker, ABS, black	048545124111	
12	Bracket Shield, ET	6165148210	
13	Button Source, ABS, black	048543060911	
14	Sponge, EVA, Black	6715020730	
15	Button Seesaw, ABS, black	048543060811	
16	Shield Fence, ET	6163114510	
17	Button Tuning, ABS, black	048543059711	
18	Button Loud, ABS, Black	048545124211	
19	Volume Rotary (Bass/Treble)	3208049510	
20	Volume Rotary (Balance)	3208052010	
21	Jack, RCA, 3P	4438109710	
22 (SW301)	Switch Push	4628059610	
23 (VR301)	Volume Motor	3228019410	
24 (SW801)	Switch Push	4628054410	
25 (SW291)	Switch Push	4628043810	
26 (SW292)	Switch Push	4628049210	
27	Jack, Phone	4438005010	
28	Switch Tact	4658003710	
29 (SEN801)	Remote Sensor, TFMT5380 (38 kHZ)	2408005001	
30 (FIP801)	FIP, 12 LM 8, FL Display	2328130301	
31	Button Preset, ABS, Black	048543059611	
32	Frame Right, SECC	6122632210	
33	Foot, ABS, Gold, Hot stamping	046033102511	
34	Foot, ABS, Black	6033102510	
35	Cover Bottom, SECC	6122418610	
36	Chassis, Front, SECC	6122214610	
37	Fastener	6528300110	
38	Heatsink Power, Aluminium	7502008310	
39	Bracket Heat Sink Right, SECC	6505135910	
40	Clamp, Wire	6525002210	
41	Bracket Heat Sink Left, SECC	6505135810	
42	Bracket PCB, SECC	6505130010	
43	Frame left, SECC	6122632110	
44	Heatsink, Regulator TR.	7505206220	
45	Heatsink, Regulator TR.	7505202410	
46	Jack, RCA, 2P	4438108510	
47	Jack, RCA, 6P	4438108710	
48	Jack, RCA, 3P	4438108810	
49	Jack, RCA, 2P, Yellow	4438114210	
50	Terminal Speaker, 8P	4408105810	
51	Terminal Speaker, 4P	4408105410	
52	Terminal Speaker, 2P	4408107010	
53	Jack, Multiroom	4438006510	
54	Jack, RCA, 4P	4438108610	
55	Terminal, Antenna	4408108210	Europe
	Terminal, Antenna	4408108310	USA/CA
56	Chassis Back, SECC (Europe)	046202041241	Europe
	Chassis Back, SECC (UL/CSA)	046102041221	USA/CA
57	Ground Terminal	4408103720	
58	Plug, Mono	4328204210	
59	Cord, AC Power	4308002310	Europe
	Cord, AC Power	4308001410	USA/CA
60	Stopper Cord	6518000111	Europe
	Stopper Cord	6518000710	USA/CA
61	Cover Top, SECC, Black	046122022611	
62	Power Transformer, 230 V, 50 Hz	2828001117	Europe
	Power Transformer, 120 V, 60 Hz	2828009967	USA/CA
63	Heatsink (H:30), Regulator TR.	7505206210	
64	Tie locking	6528002810	
65	Outlet, 1P	4448103610	Europe
	Outlet, 3P	4448102910	USA/CA
S1	Screw #2 BTC 3 X 8 B	8109230083	
S2	Screw WSAM 4 X 8 B	8159440083	
S3	Screw #2 BTC 3 X 6 B	8109230063	
S4	Screw #2 FTC 3 X 8 B	8129230083	
S5	Screw #2 WPTC 3 X 8 Y	8159230081	
S6	HEX MSPW 3 X 12 Y	8099130121	
S7	HEX MSPW 3 X 16 Y	8099130161	
S8	Screw, Heatsink	8195000310	
S9	Screw #1 PTC 3 X 10 B	8119130103	
S10	Screw Ground	8155000710	
	MISCELLANEOUS		
P1	P.C.Board Main	4001000300	
P2	P.C.Board Tuner	4001000400	
P2-1	P.C.Board Power Supply	4001000410	
P2-2	P.C.Board Surround Main	4001000420	
P2-3	P.C.Board Tone	4001000430	
P2-4	P. C. Board Volume	4001000440	
P3	P.C.Board Front	4001000500	
P3-1	P.C.Board Dolby	4001000510	
P3-2	P.C.Board Headphone	4001000520	
P3-3	P.C.Board Volume LED	4001000530	
	Standby Transformer, 230 V 50 Hz	2828000077	Europe
	Standby Transformer, 120 V 60 Hz	2828089007	USA/CA
	Card Cable, 18P, 140mm	4118618149	
	Card Cable, 15P 180mm	4118615189	
	Card Cable, 12P 450mm	4118612455	
	Card Cable, 19P, 450mm	4118619459	

GENERAL UNIT

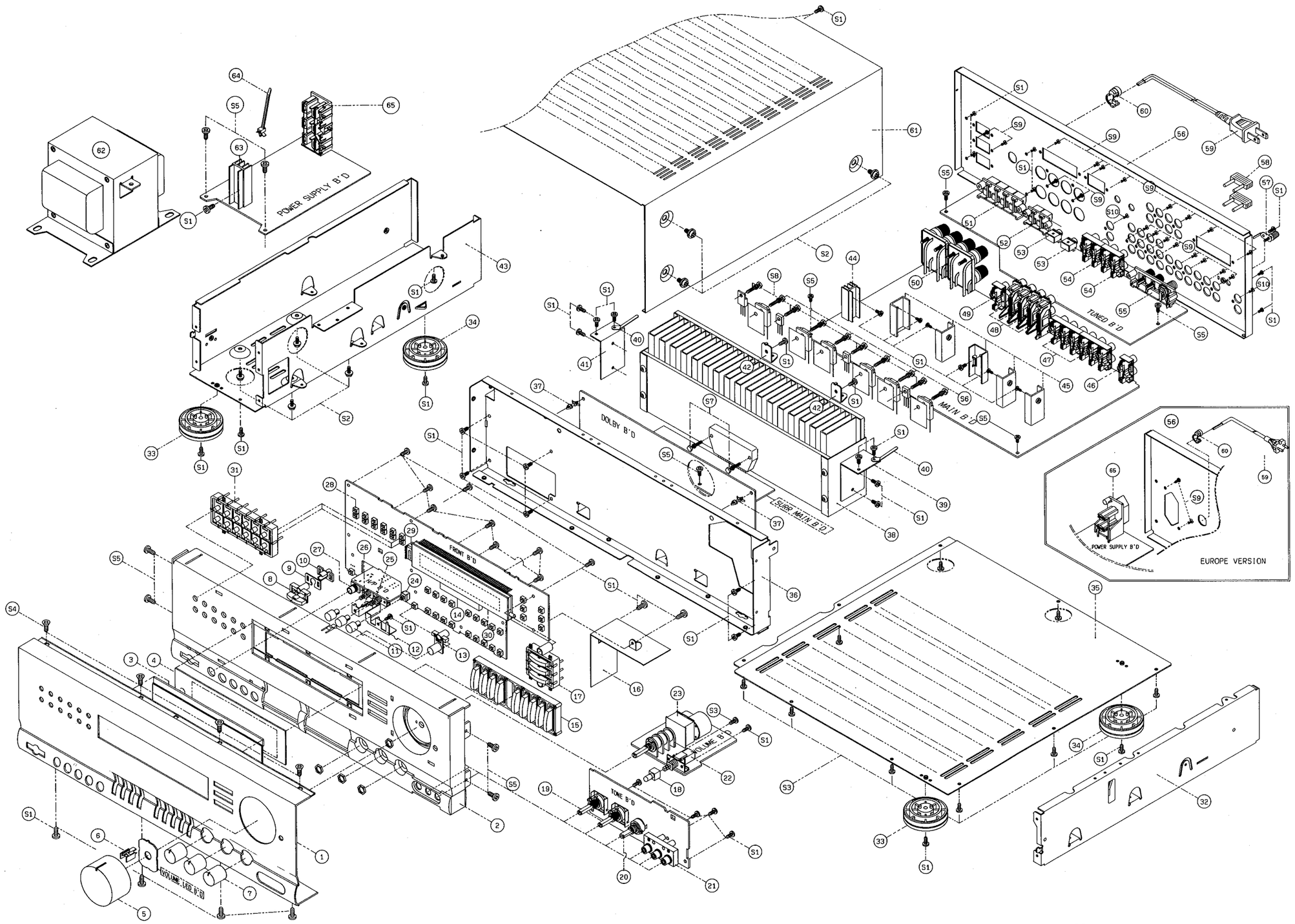

GENERAL UNIT

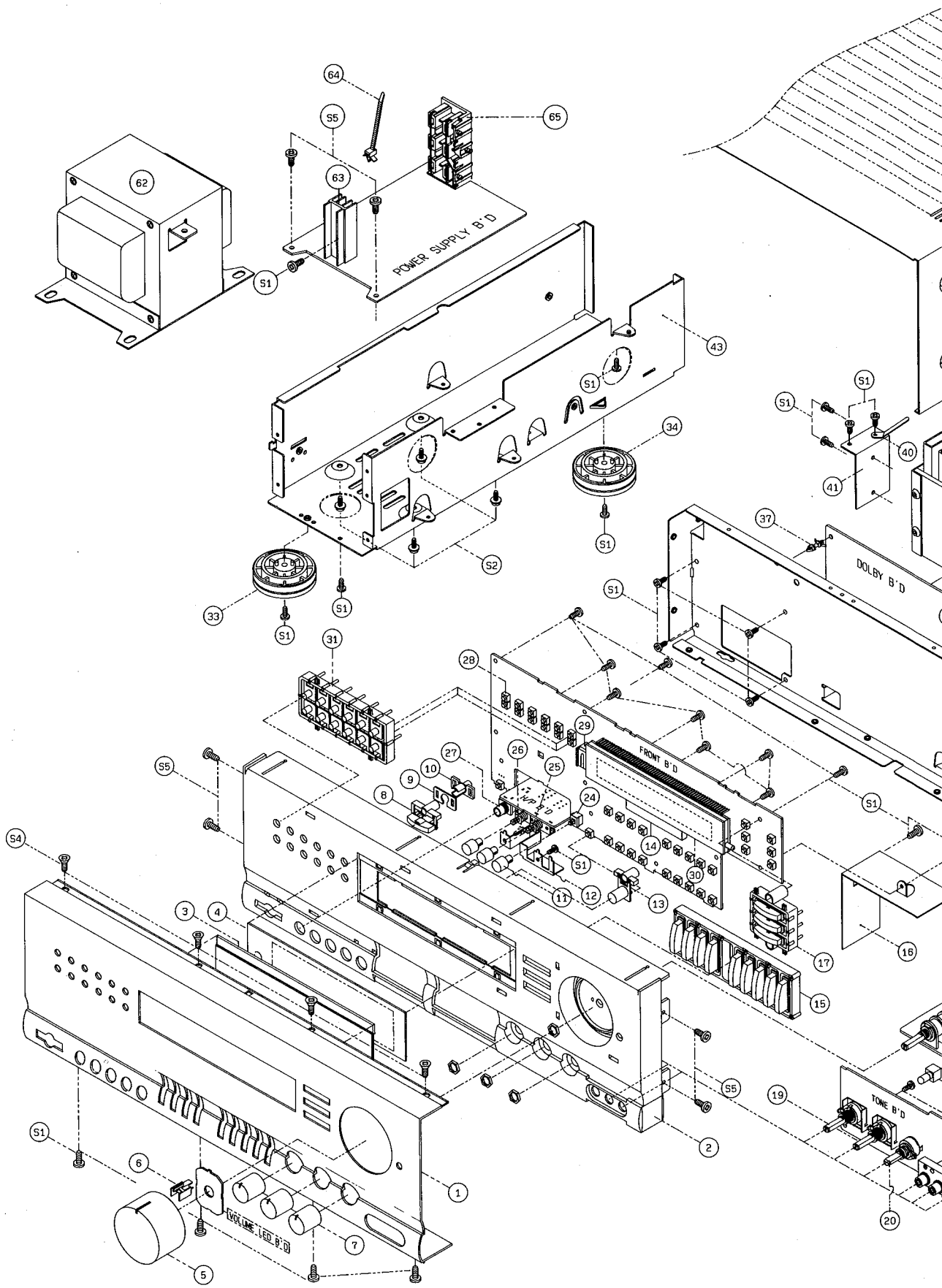

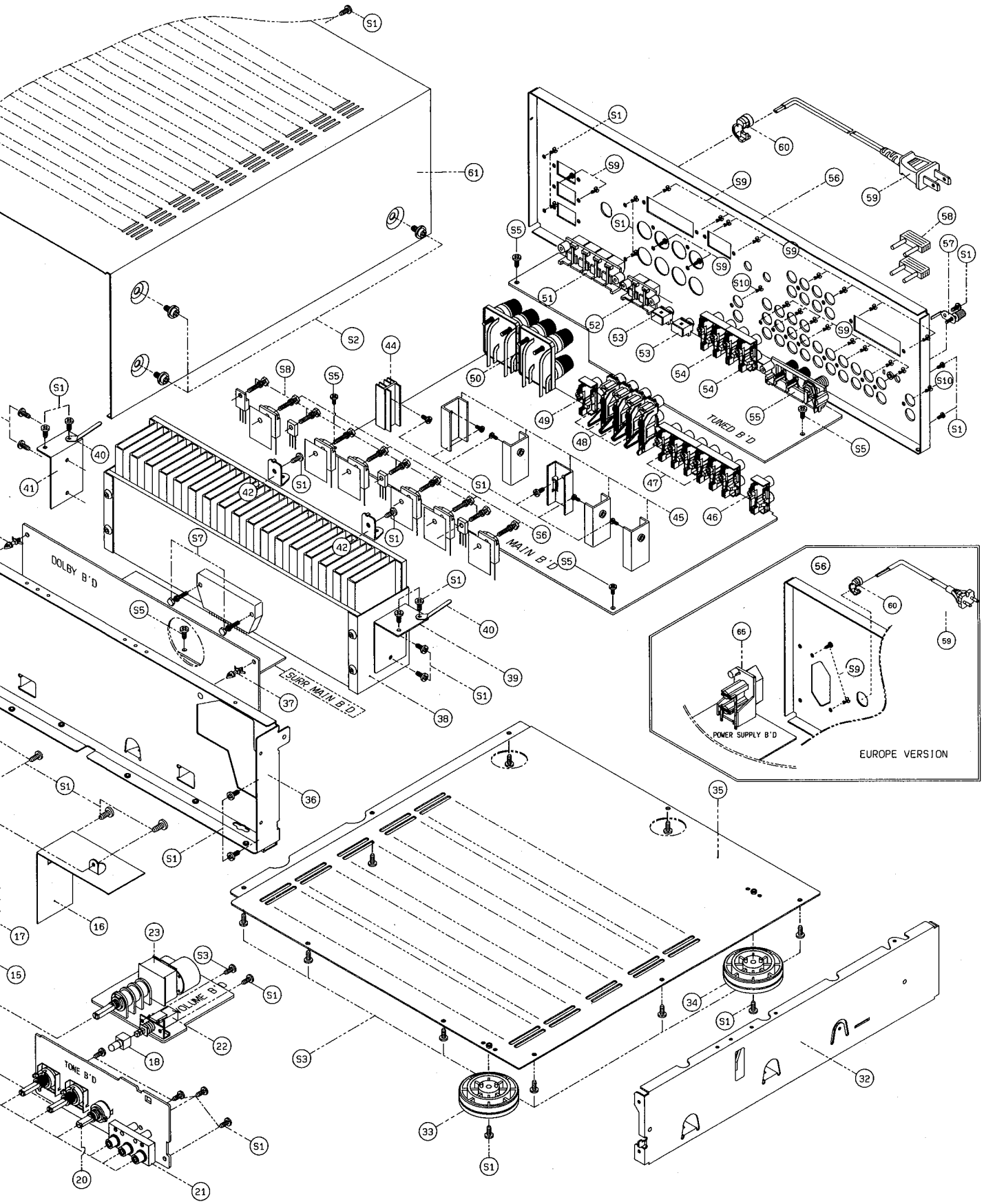
TUNED B'D
MAIN B'D
DOLBY B'D
SURR MAIN B'D
VOLUME B'D
TONE B'D
POWER SUPPLY B'D
EUROPE VERSION

PRINTED CIRCUIT BOARDS

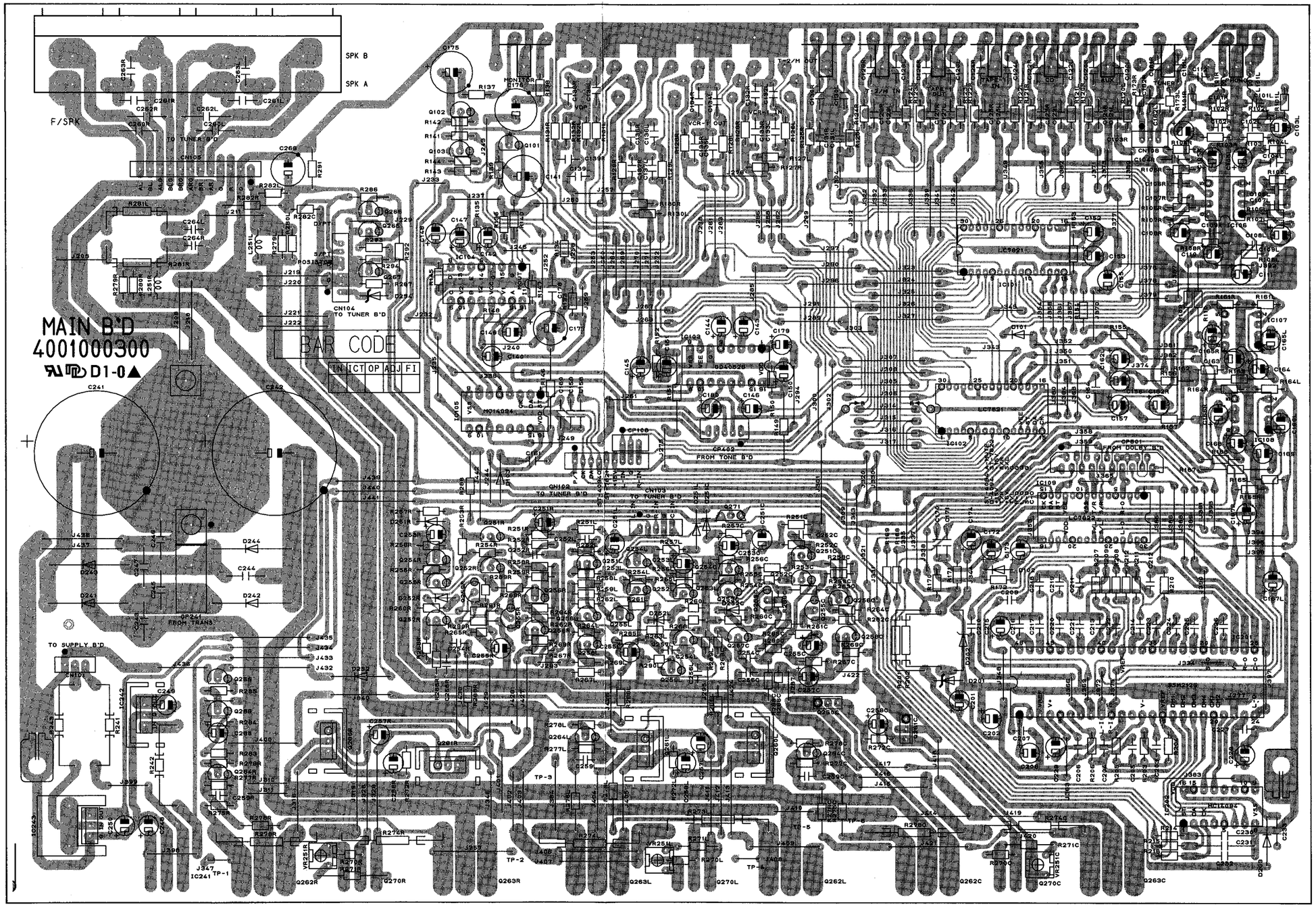

PRINTED CIRCUIT BOARDS

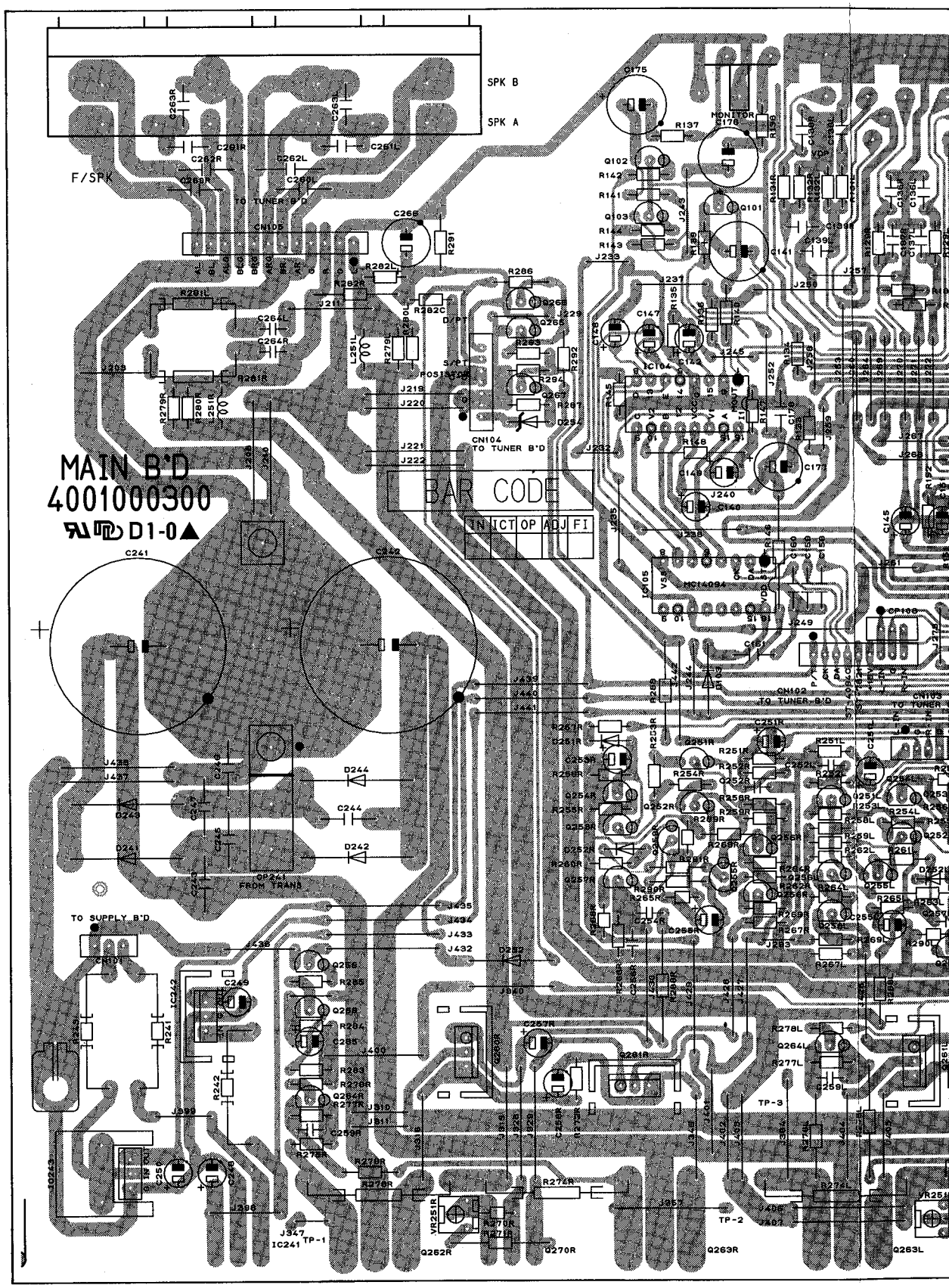

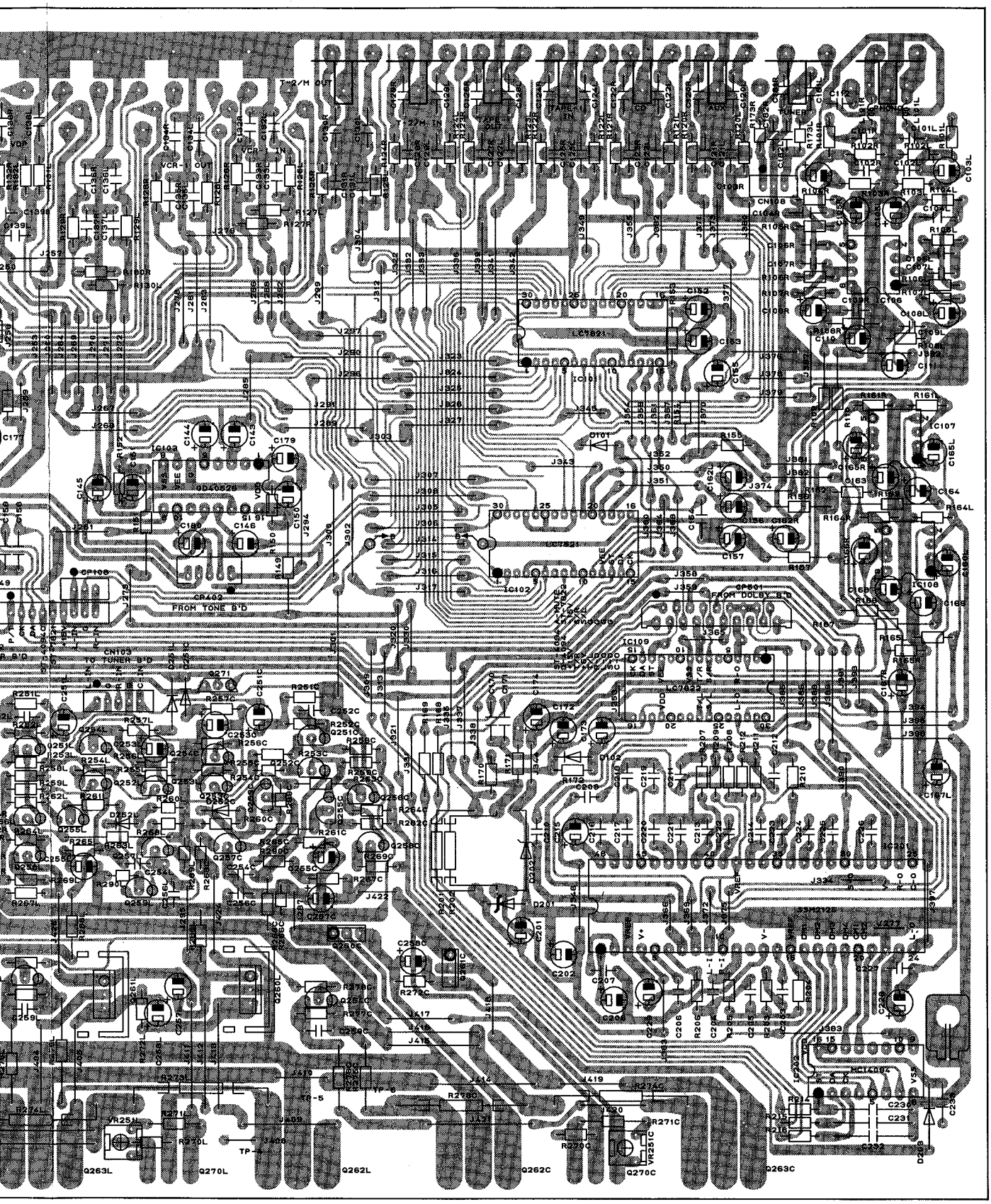
FROM TONE B'D
FROM DOLBY B'D
Q263L
Q270L
Q262L
Q262C
Q270C
Q263C

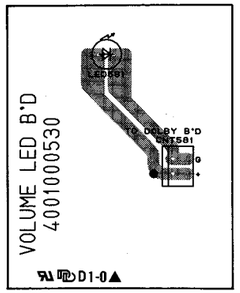
VOLUME LED B'D
4001000530
D1-0

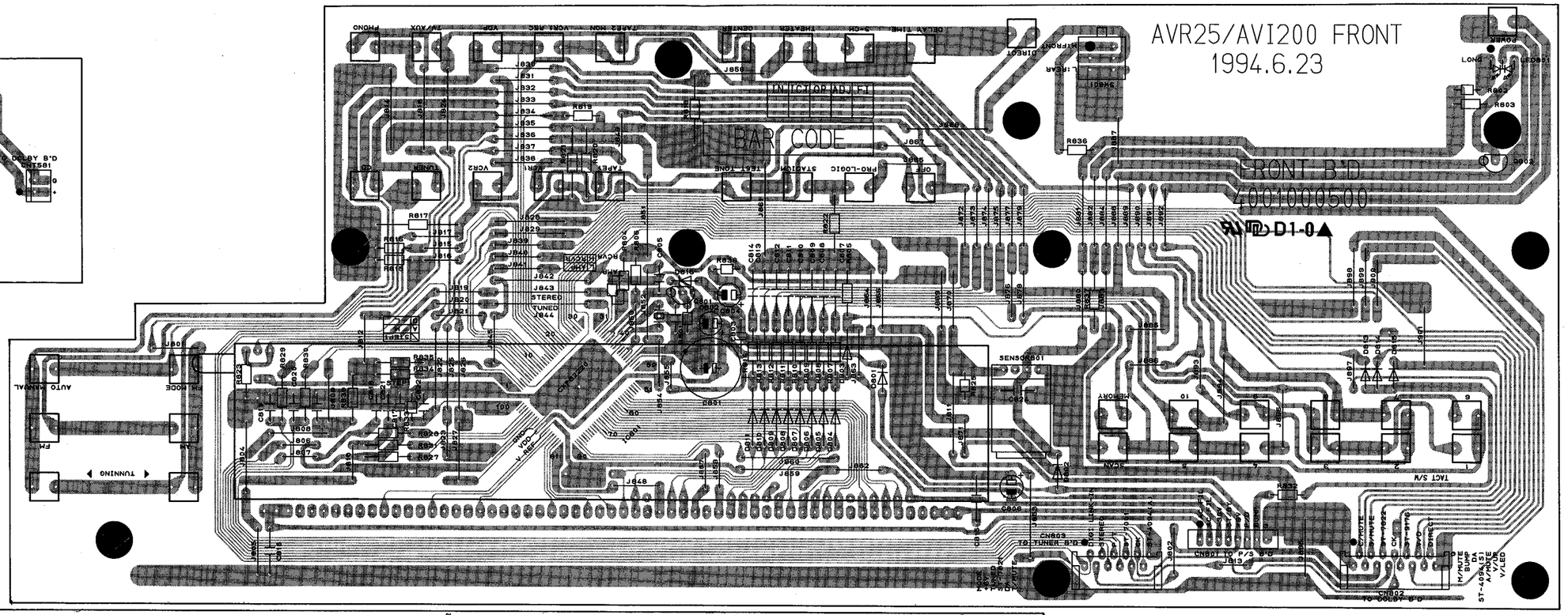
AVR25/AVI200 FRONT
1994.6.23
FRONT B'D
4001000500
D1-0
BAR CODE
INJECTOR ADJUST
TUNING
AUTO REMOVAL
FM
TO TUNER B'D
TO POWER B'D

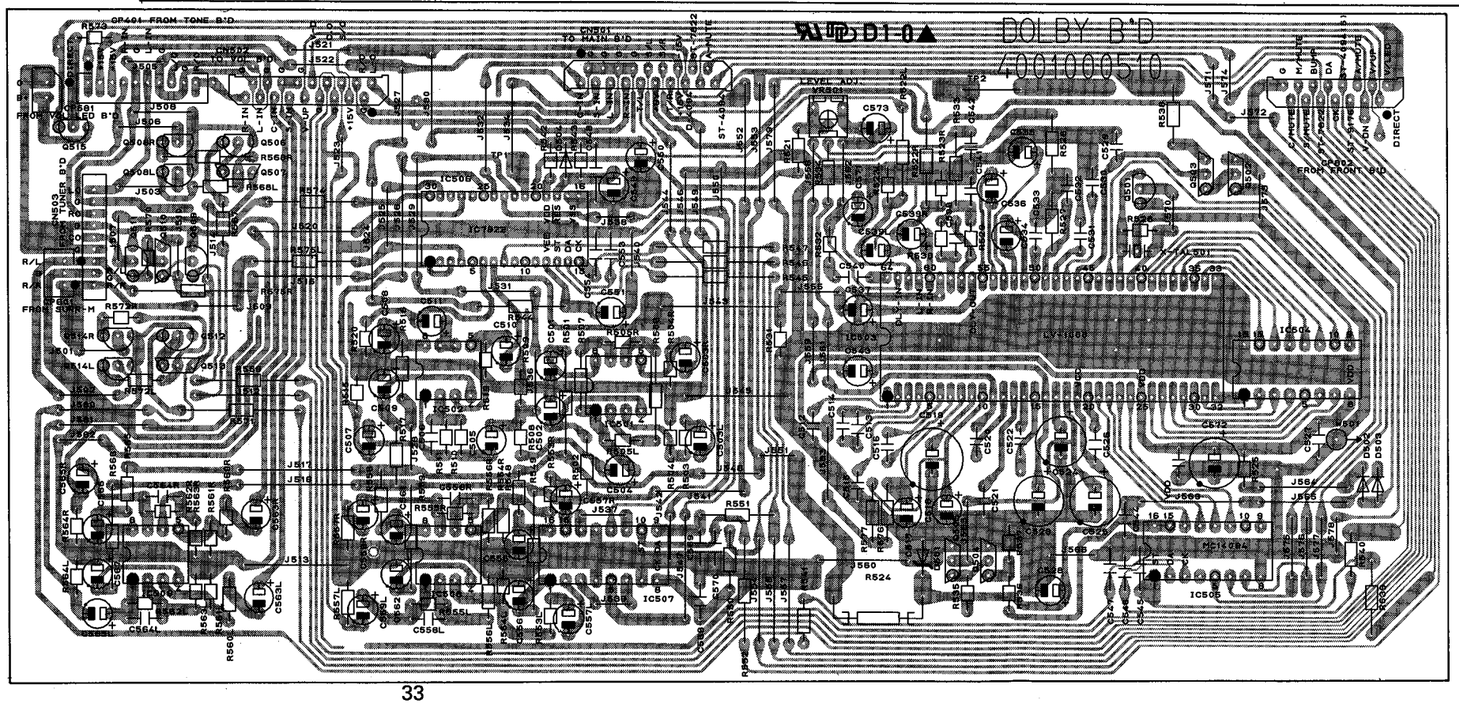
DOLBY B'D
4001000510
D1-0
TO MAIN B'D
FROM TONE B'D
FROM FRONT B'D
LEVEL ADJ
DIRECT

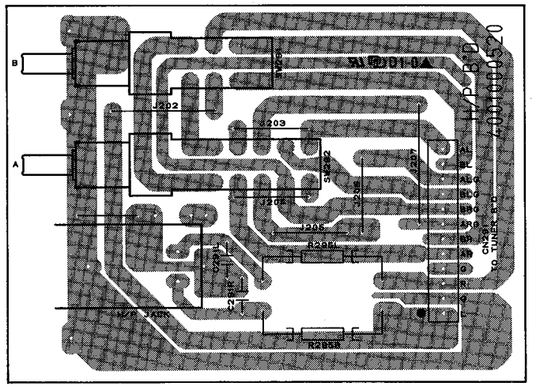
D1-0
4001000530
TO TUNER B'D
4/8 JACK

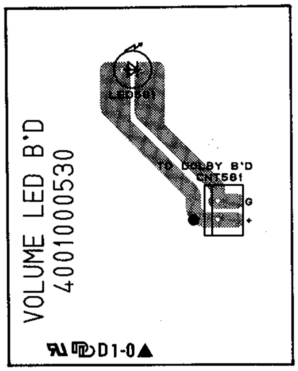
VOLUME LED B'D
4001000530
LED581
TO DOLBY B'D
CNT581
D1-0

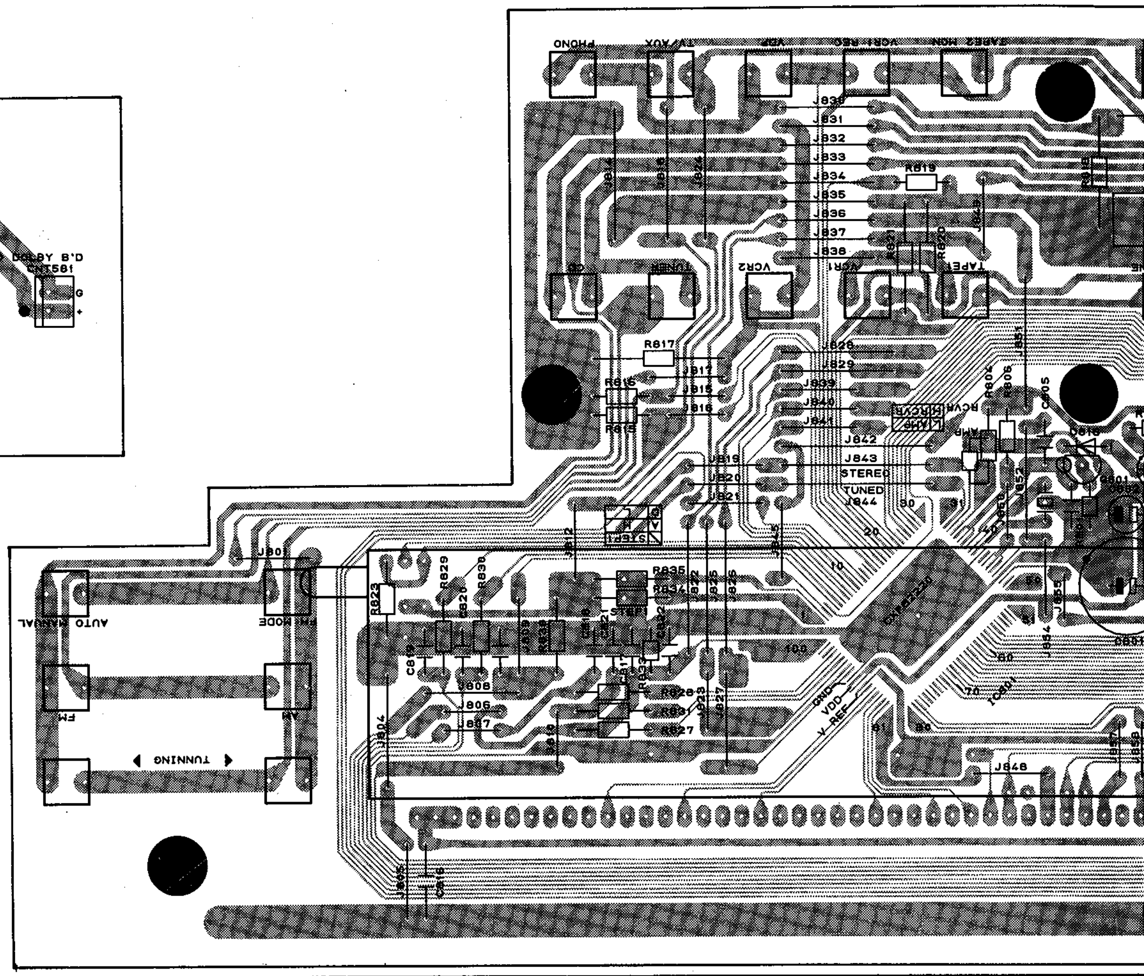
PHONO
TV/AUX
VDP
VCR1 REC
TAPE2 MON
CD
TUNER
VCR2
VCR1
TAPE1
AUTO MANUAL
FM MODE
FM
AM
TUNNING
STEREO
TUNED
GND
VDD
V REF
IC801

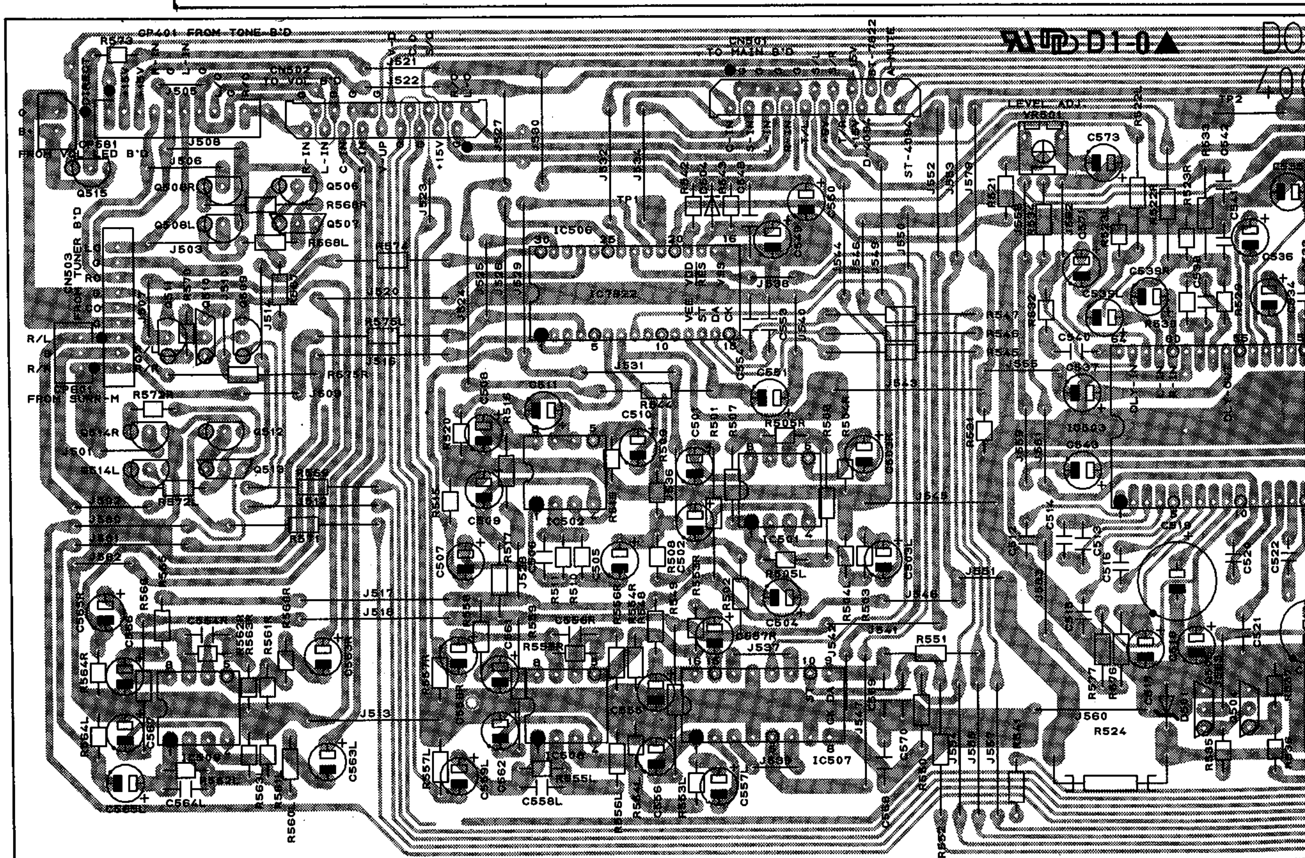
CP401 FROM TONE B'D
CN502 TO VOL B'D
CP581 FROM VOL LED B'D
CN503 FROM TUNER B'D
CP601 FROM SURR-M
CN501 TO MAIN B'D
LEVEL ADJ.
VR501
IC506
IC7822
IC502
IC501
IC503
IC507
D1-0

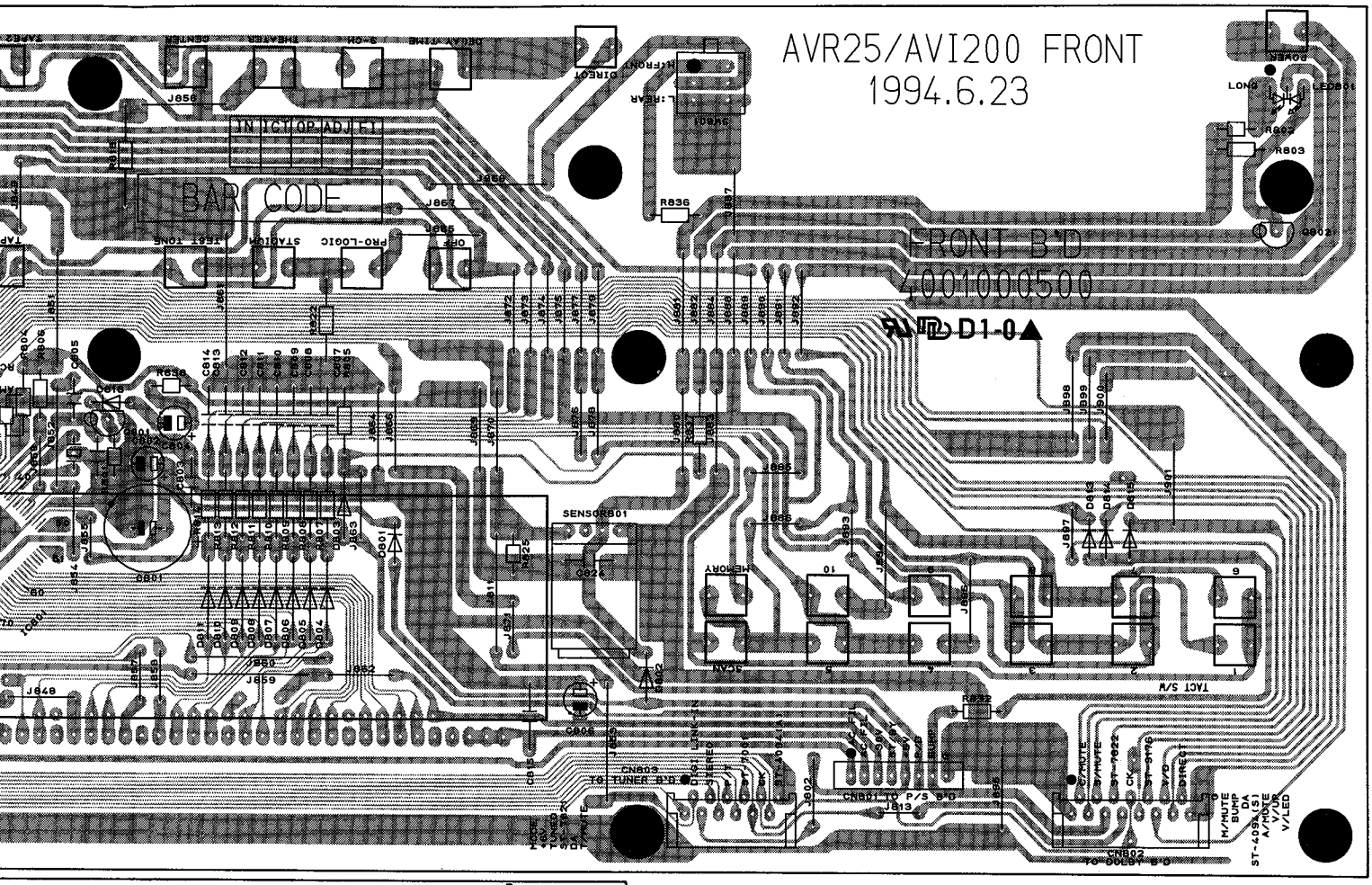
AVR25/AVI200 FRONT
1994.6.23
BAR CODE
FRONT B'D
40010000500
D1-0
SENSOR801
TO TUNER B'D
CN801 TO P/S B'D
TACT S/W
M/MUTE
BUMP
A/MUTE
V/UR
V/LED

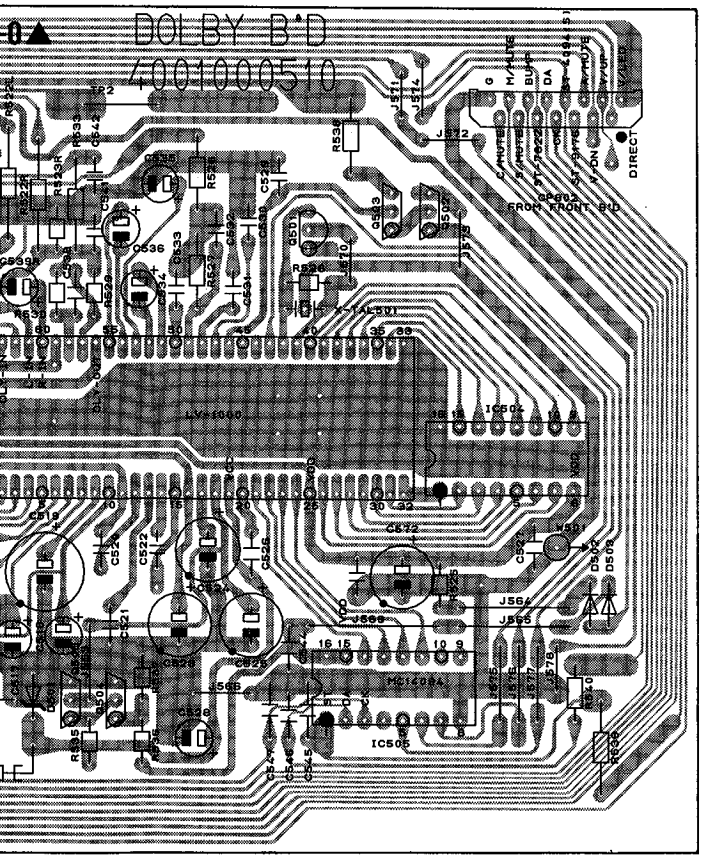
DOLBY B'D
40010000510
FROM FRONT B'D
DIRECT

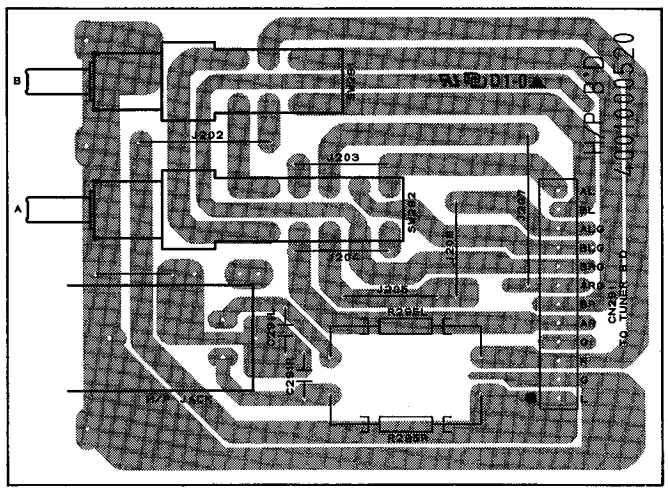
D1-0
TO TUNER B'D

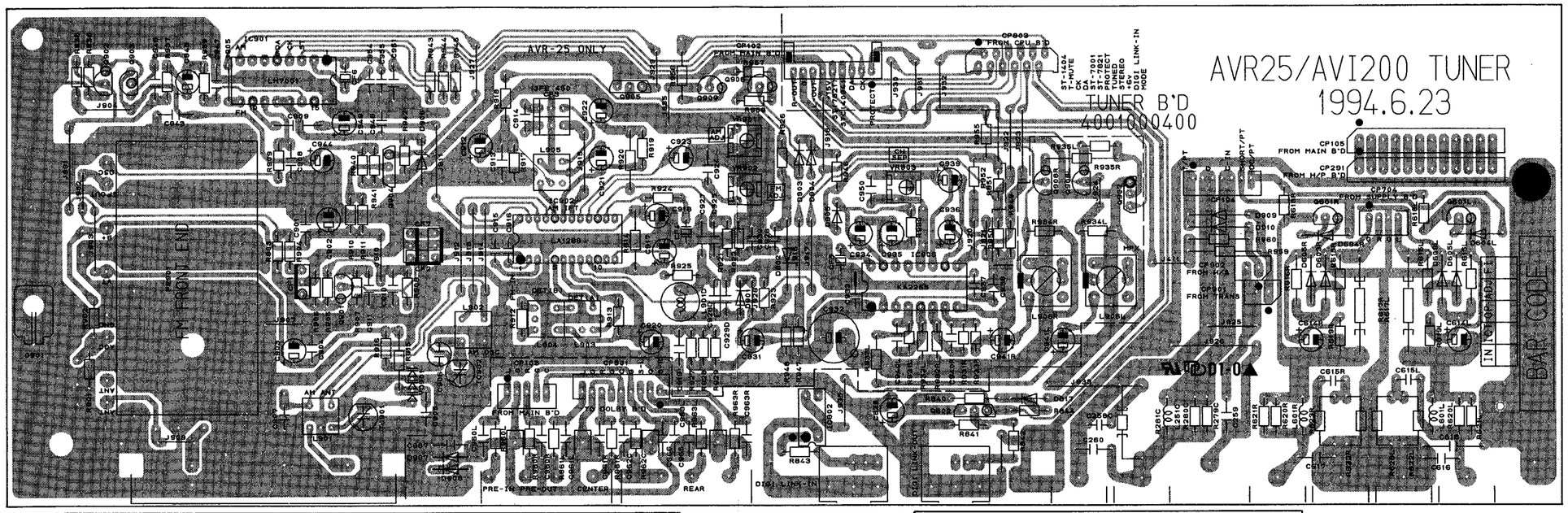
AVR25/AVI200 TUNER
1994.6.23
TUNER B'D
4001000400
AVR-25 ONLY
FM FRONT END
BAR CODE
PRE-IN
PRE-OUT
CENTER
REAR
DIGI LINK-IN

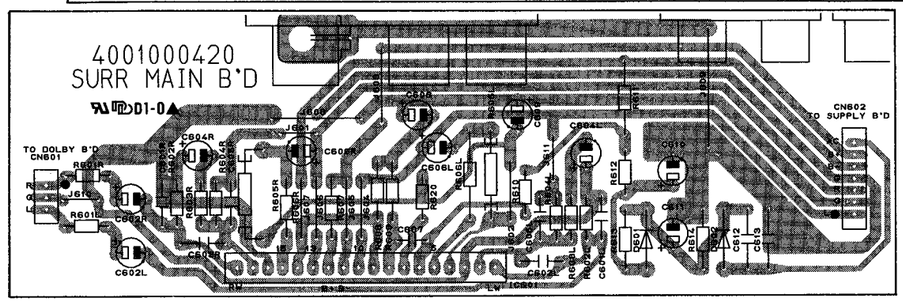
4001000420
SURR MAIN B'D
TO DOLBY B'D
TO SUPPLY B'D

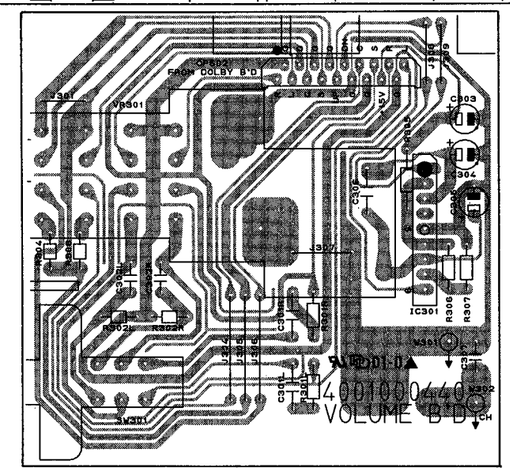
4001000440
VOLUME B'D

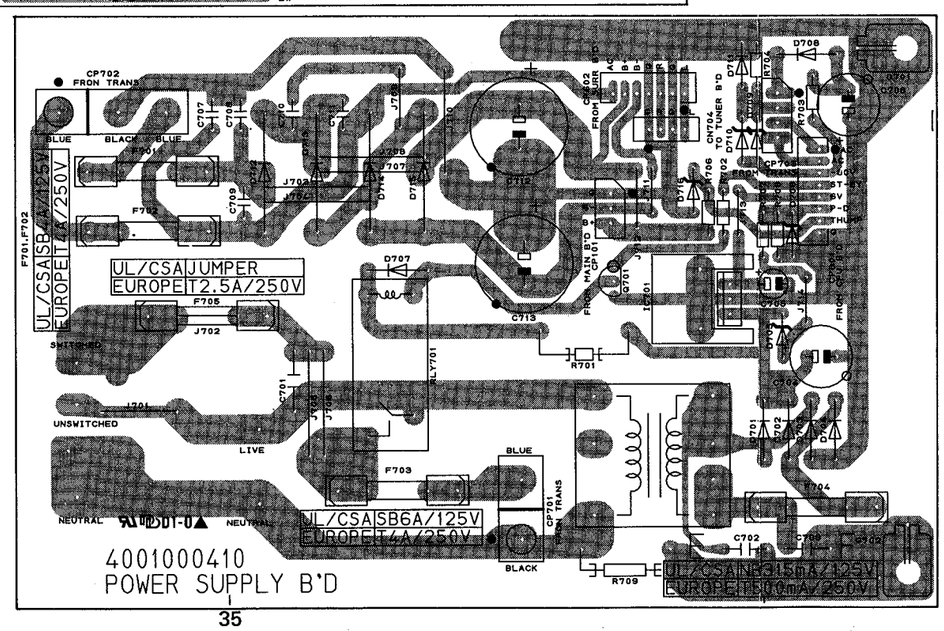
UL/CSA|JUMPER
EUROPE|T2.5A/250V
UL/CSA|SB6A/125V
EUROPE|T4A/250V
UL/CSA|NE315mA/125V
EUROPE|T500mA/250V
4001000410
POWER SUPPLY B'D

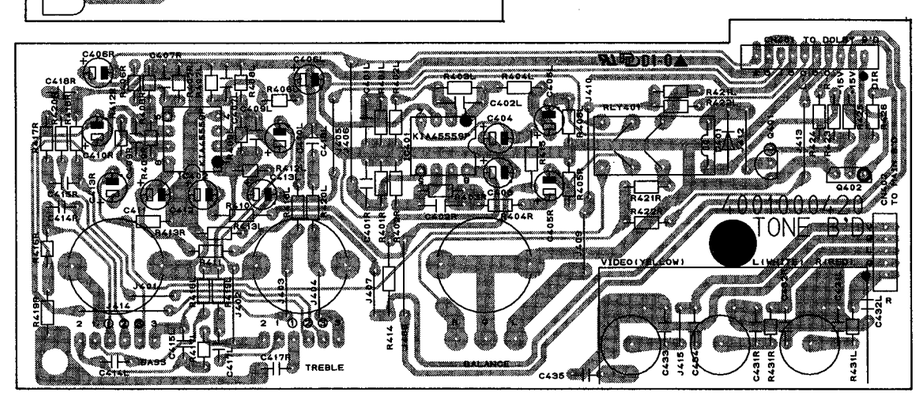
4001000420
TONE B'D

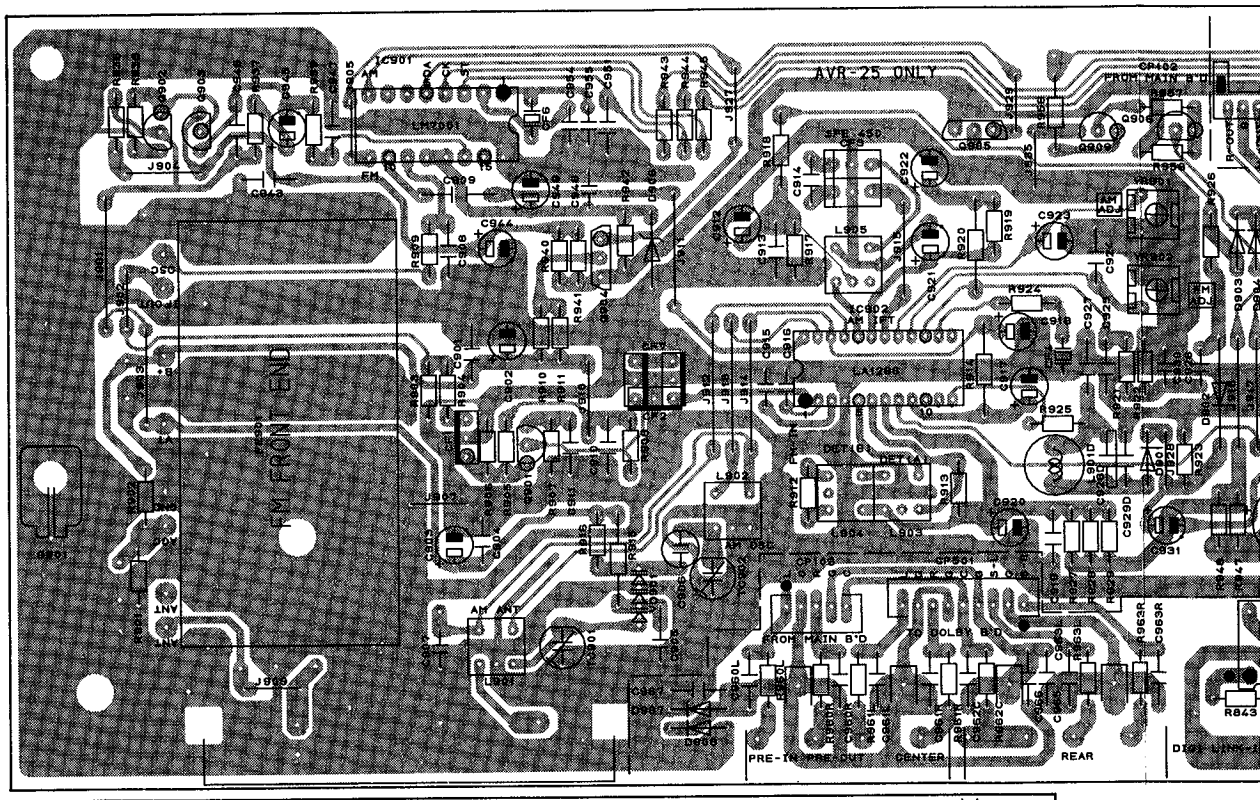
AVR-25 ONLY
FM FRONT END
FROM MAIN B'D
TO DOLBY B'D
PRE-IN
PRE-OUT
CENTER
REAR

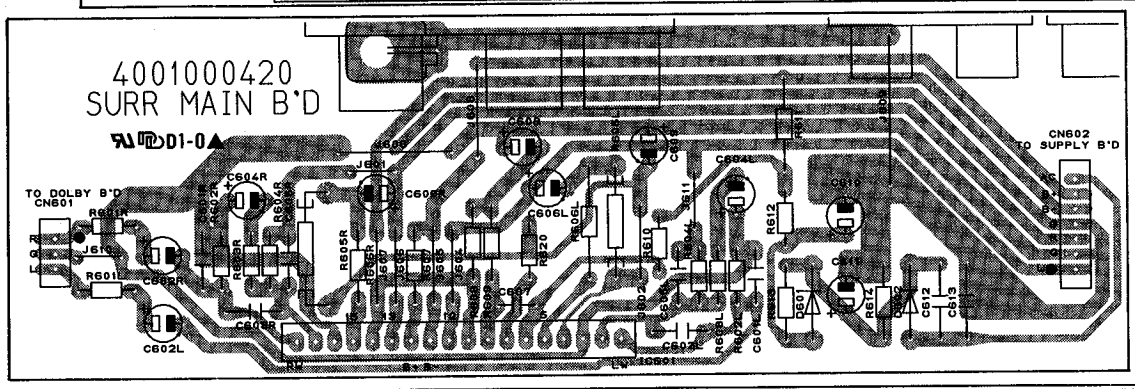
4001000420
SURR MAIN B'D
D1-0
TO DOLBY B'D
CN601
CN602
TO SUPPLY B'D

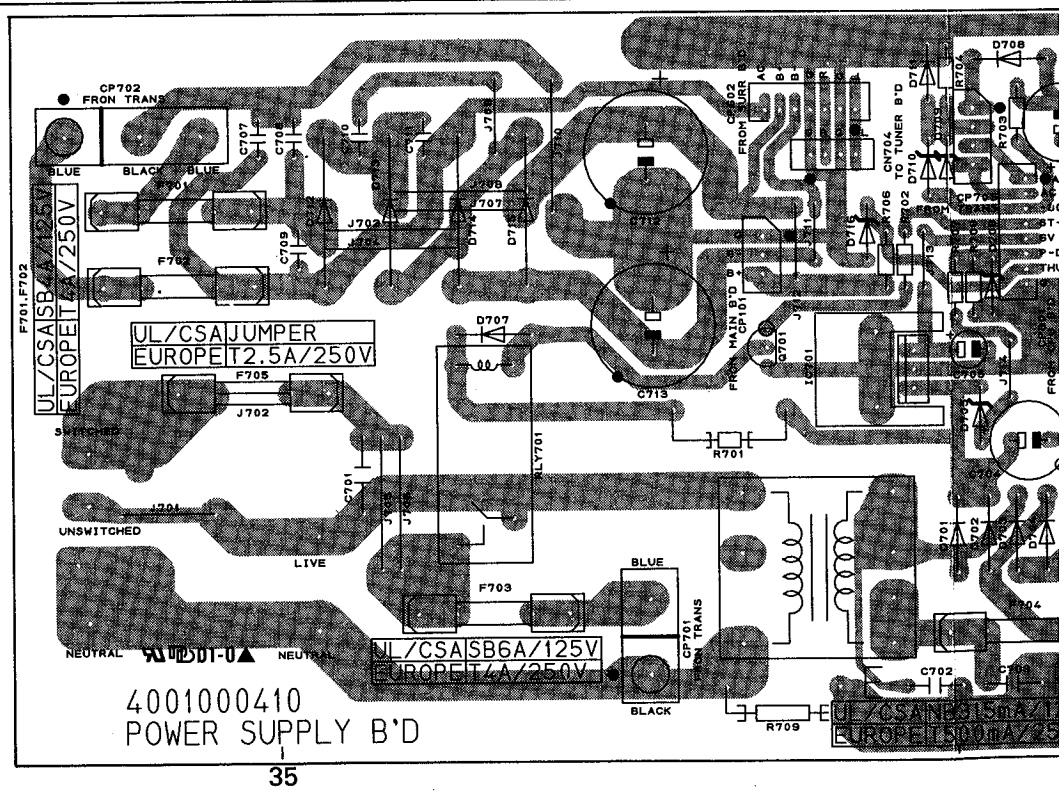
CP702
FRON TRANS
BLUE
BLACK
UL/CSA SB4A/125V
EUROPE T2.5A/250V
UL/CSA JUMPER
EUROPE T2.5A/250V
SWITCHED
UNSWITCHED
LIVE
NEUTRAL
D1-0
UL/CSA SB6A/125V
EUROPE T4A/250V
CP701
FRON TRANS
4001000410
POWER SUPPLY B'D

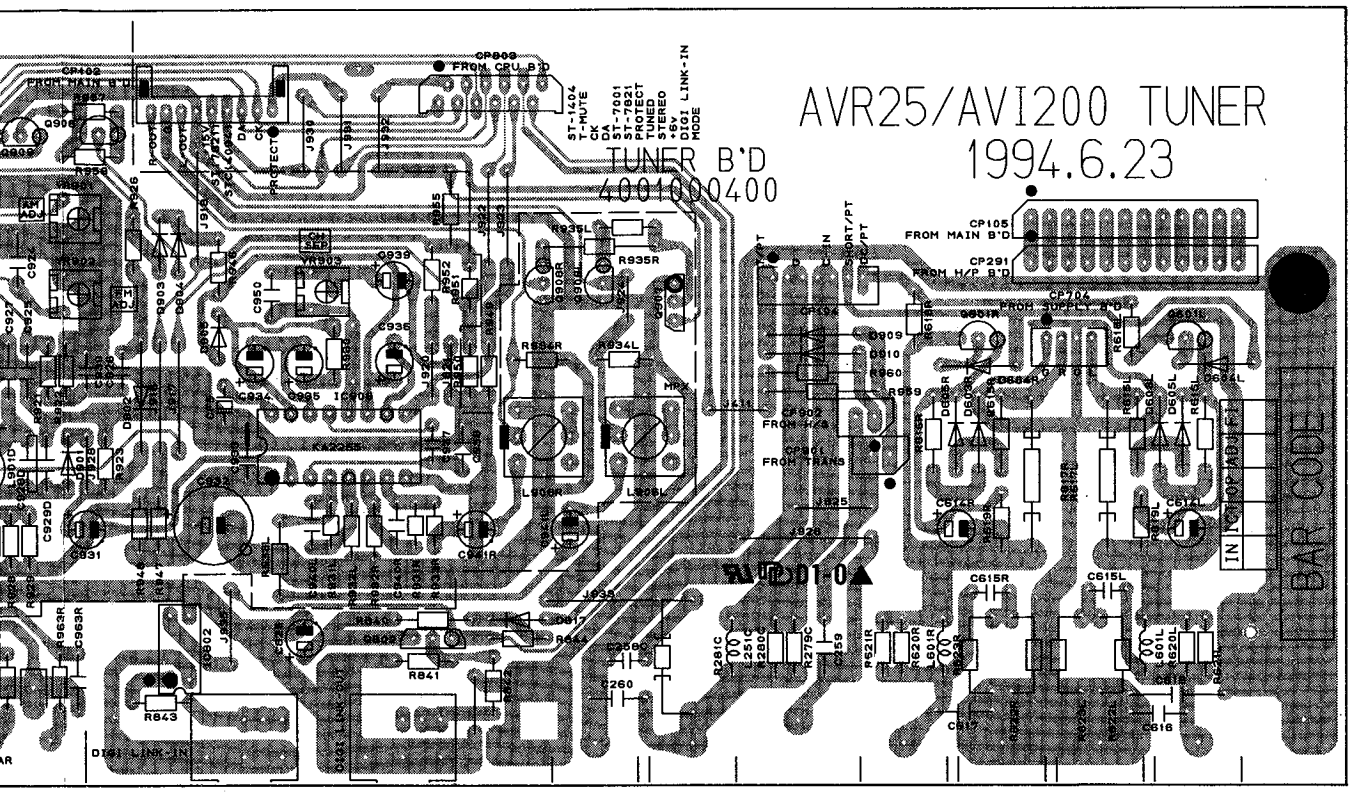
AVR25/AVI200 TUNER
1994.6.23
TUNER B'D
4001000400
CP105
FROM MAIN B'D
CP291
FROM H/P B'D
CP903
FROM CPU B'D
CP402
FROM MAIN B'D
ST-1404
T-MUTE
CK
DA
ST-7001
ST-7821
PROTECT
TUNED
STEREO
DOLBY LINK-IN
MODE
BAR CODE
IN
OUT
D101 LINK-IN
D101 LINK-OUT

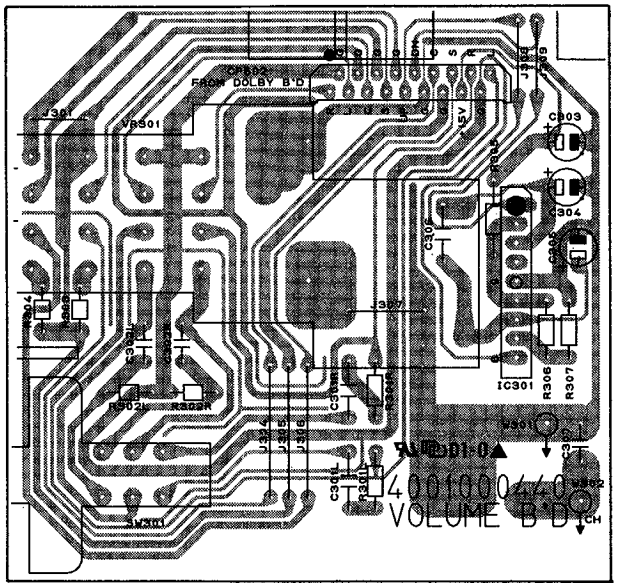
CP602
FROM DOLBY B'D
4001000440
VOLUME B'D

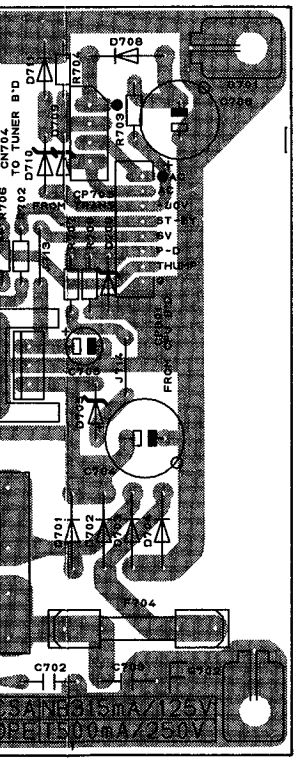
CN704
TO TUNER B'D
3A/315mA/125V
OPEIT500mA/250V

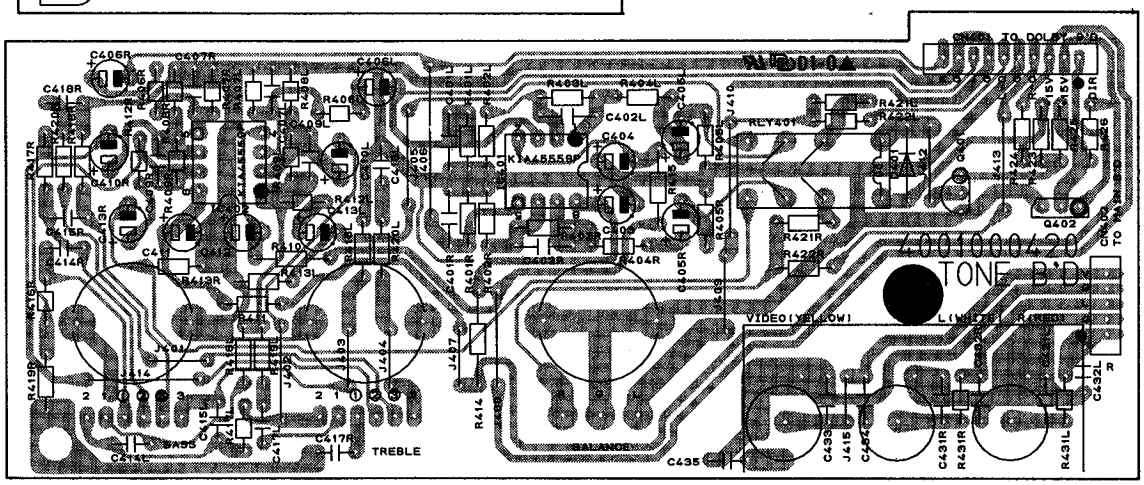
4001000420
TONE B'D
VIDEO(YELLOW)
TREBLE
BALANCE

ELECTRICAL PARTS LIST

Ref. No.	Description				Mfr. Part No.
	ASSEMBLY HEATSINK				**057502000150**
38	Heatsink Power, Aluminium				7502008310
39	Bracket Heat Sink Right, SECC				6505135910
40	Clamp, Wire				6525002210
41	Bracket Heat Sink Left, SECC				6505135810
42	Bracket PCB, SECC				6505130010
Q270C	2SC4137, NPN, Bias				2008622110
IC241	GL7815, Regulator				2168601105
Q270L/R	2SC4137, NPN, Bias				2008622110
Q262C	2SC3182N-O, NPN				2028307101
Q263C	2SA1265N-O, PNP				2028007101
Q262L/R	2SC3182N-O, NPN				2028307101
Q263L/R	2SA1265N-O, PNP				2028007101
S1	Screw #2 BTC 3 X 8 B				8109230083
S6	HEX MSPW 3 X 12 Y				8099130121
S7	HEX MSPW 3 X 16 Y				8099130161
S8	Screw, Heatsink				8195000310
	END OF ASSEMBLY HEATSINK				
P1	**Ass'y P.C.B MAIN**				**054002007547**
	CAPACITORS				
C102L/R	Ceramic Tubular	100 pF	50 V	J	3519101935
C103L/R	Electrolytic SA	4.7 uF	50 V	M	3479247971
C105L/R	Electrolytic SA	33 uF	25 V	M	3479233041
C106L/R	Mylar	0.0018 uF	100 V	J	3679182120
C107L/R	Mylar	0.0056 uF	100 V	J	3679562120
C108L/R	Electrolytic SA	1 uF	50 V	M	3479210971
C109L/R	Mylar	0.0018 uF	100 V	J	3679182120
C110/C111	Electrolytic SG	47 uF	25 V	M	3479347041
C112	Ceramic Disc	0.01 uF	50 V	Z	3579103530
C140	Electrolytic SA	33 uF	25 V	M	3479233041
C141	Electrolytic SG	470 uF	10 V	M	3479347121
C142	Electrolytic SA	33 uF	25 V	M	3479233041
C143-C146	Electrolytic SA	10 uF	50 V	M	3479210071
C147/C148	Electrolytic SA	33 uF	25 V	M	3479233041
C149	Electrolytic SA	2.2 uF	50 V	M	3479222971
C150-C153	Electrolytic SG	47 uF	25 V	M	3479347041
C154	Ceramic Disc	0.01 uF	50 V	Z	3579103530
C155	Electrolytic SA	1 uF	50 V	M	3479210971
C156/C157	Electrolytic SG	47 uF	25 V	M	3479347041
C158	Ceramic Tubular	1000 pF	50 V	J	3519102935
C159/C160	Ceramic Tubular	100 pF	50 V	J	3519101935
C161	Ceramic Tubular	0.1 uF	50 V	Z	3519104935
C162L/R	Electrolytic SA	4.7 uF	50 V	M	3479247971
C163/C164	Electrolytic SG	47 uF	25 V	M	3479347041
C165L/R	Electrolytic SA	4.7 uF	50 V	M	3479247971
C166L/R	Electrolytic SA	10 uF	50 V	M	3479210071
C167L/R	Electrolytic SA	10 uF	50 V	M	3479210071
C168/C169	Electrolytic SG	47 uF	25 V	M	3479347041
C170/C171	Ceramic Tubular	100 pF	50 V	J	3519101935
C172	Electrolytic SG	47 uF	25 V	M	3479347041
C173	Electrolytic SA	1 uF	50 V	M	3479210971
C174	Electrolytic SG	47 uF	25 V	M	3479347041
C175-C177	Electrolytic SG	470 uF	10 V	M	3479347121
C178	Ceramic Tubular	0.1 uF	50 V	Z	3519104935
C179/C180	Electrolytic SA	10 uF	50 V	M	3479210071
C201/C202	Electrolytic SG	220 uF	10 V	M	3479322121
C203-C205	Mylar	0.01 uF	100 V	J	3679103120
C206/C207	Mylar	0.22 uF	63 V	K	3679224297
C208	Electrolytic SA	4.7 uF	50 V	M	3479247971
C209-C212	Mylar	0.1 uF	63 V	K	3679104297
C213/C214	Poly	680 pF	50 V	J	3619681110
C215	Electrolytic SA	4.7 uF	50 V	M	3479247971
C216/C217	Mylar	0.22 uF	63 V	K	3679224297
C218-C221	Mylar	0.33 uF	63 V	K	3679334297
C222-C225	Mylar	0.022 uF	100 V	J	3679223120
C226/C227	Mylar	0.1 uF	63 V	K	3679104297
C228	Electrolytic SG	100 uF	10 V	M	3479310121
C229	Electrolytic SA	10 uF	50 V	M	3479210071
C230-C232	Ceramic Tubular	100 pF	50 V	J	3519101935
C233	Ceramic Disc	0.01 uF	50 V	Z	3579103530
C241/C242	Electrolytic HM	10000 uF	80 V	M	3419510345
C243-C247	Ceramic Disc	0.01 uF	500 V	Z	3509103451
C248-C250	Electrolytic SA	1 uF	50 V	M	3479210971
C251C	Electrolytic SG	47 uF	25 V	M	3479347041
C251L/R	Electrolytic SG	47 uF	25 V	M	3479347041
C252C	Ceramic Disc	68 pF	50 V	J	3579680130
C252L/R	Ceramic Disc	68 pF	50 V	J	3579680130
C253C	Electrolytic SA	1 uF	50 V	M	3479210971
C253L/R	Electrolytic SA	1 uF	50 V	M	3479210971
C254C	Ceramic Disc	3 pF	50 V	D	3579309030
C254L/R	Ceramic Disc	3 pF	50 V	D	3579309030
C255C	Electrolytic SG	470 uF	10 V	M	3479347121
C255L/R	Electrolytic SG	470 uF	10 V	M	3479347121
C256C	Ceramic Tubular	100 pF	50 V	J	3519101935
C256L/R	Ceramic Tubular	100 pF	50 V	J	3519101935
C257C	Electrolytic SA	10 uF	50 V	M	3479210071
C257L/R	Electrolytic SA	10 uF	50 V	M	3479210071
C258C	Electrolytic SA	4.7 uF	50 V	M	3479247971
C258L/R	Electrolytic SA	4.7 uF	50 V	M	3479247971
C259C	Mylar	0.33 uF	63 V	K	3679334297
C259L/R	Mylar	0.33 uF	63 V	K	3679334297
C264L/R	Mylar	0.047 uF	100 V	J	3679473120
C265	Electrolytic SA	1 uF	100 V	M	3479210997
C266	Electrolytic SG	470 uF	10 V	M	3479347121
	CONNECTORS				
CN101	Lead Ass'y, 3P, 200 mm				436103203331
CN102	Lead Ass'y, 9P 100 mm				436209103332
CN103	Lead Ass'y, 5P, 180 mm				436205183332
CN104	Lead Ass'y, 7P 140 mm				436207143332
CN105	Lead Ass'y, 12P, 140 mm				435112143401
CP241	Plug LV AC, 3P				4428525790
CP402	Wafer 5P				4428516410
CP501	FPC Plug 19P				4428526310
	DIODES				
D101-D103	1N4148M, Switching				2058322101
D201/D202	Diode Zener, DZ 6.8BSC				2258599121
D203	1N4148M, Switching				2058322101
D241-D244	Diode, PX6A03, Rectifier				2058100138
D251C	1N4148M, Switching				2058322101
D251L/R	1N4148M, Switching				2058322101
D252C	1N4148M, Switching				2058322101
D252L/R	1N4148M, Switching				2058322101
D254	Diode Zener, DZ 12.0BSC				2258599116
	ICs				
IC101/IC102	LC7821				2168017132

Ref. No.	Description	Mfr. Part No.
IC103	GD4052B	2138001114
IC104	BA7625, Video Switching	2168027106
IC105	MC14094BCP	2138009115
IC106-IC108	KIA4559P/KIA75559P, OP Amp.	2168206104
IC109	LC7822	2168017139
IC201	SSM-2126A	2168000122
IC202	MC14094BCP	2138009115
IC242	GL7806, Regulator	2168601110
IC243	GL7915, Regulator	2168601111
	COILS	
L251L/R	Coil, Inductor, 0.5 uH	2648001010
	TRANSISTORS	
Q101-Q103	BKTA1266Y/KTA1015Y, PNP	2208206105
Q251C	KTA2400-GG, PNP	2208006100
Q251L/R	KTA2400-GG, PNP	2208006100
Q252C	KTA2400-GG, PNP	2208006100
Q252L/R	KTA2400-GG, PNP	2208006100
Q253C	KTA2400-GG, PNP	2208006100
Q253L/R	KTA2400-GG, PNP	2208006100
Q254C	BKTA1266Y/KTA1015Y, PNP	2208206105
Q254L/R	BKTA1266Y/KTA1015Y, PNP	2208206105
Q255C	KTC2240BL/KTC3200, NPN	2208606108
Q255L/R	KTC2240BL/KTC3200, NPN	2208606108
Q256C	KTC2240BL/KTC3200, NPN	2208606108
Q256L/R	KTC2240BL/KTC3200, NPN	2208606108
Q257C	KTA949/KTA1024Y, PNP	2208206102
Q257L/R	KTA949/KTA1024Y, PNP	2208206102
Q258C	KTC2229/KTC3206Y, NPN	2208606118
Q258L/R	KTC2229/KTC3206Y, NPN	2208606118
Q259C	KTA1268/KTA970, PNP	2008206104
Q259L/R	KTA1268/KTA970, PNP	2008206104
Q260C	2SC4883A-Y, NPN	2028316100
Q260L/R	2SC4883A-Y, NPN	2028316100
Q261C	2SA1859A-Y, PNP	2028016100
Q261L/R	2SA1859A-Y, PNP	2028016100
Q264C	KTC3198Y/KTC1815Y, NPN	2208606104
Q264L/R	KTC3198Y/KTC1815Y, NPN	2208606104
Q265-Q267	KTC3198Y/KTC1815Y, NPN	2208606104
Q268	BKTA1266Y/KTA1015Y, PNP	2208206105
Q269	KTC3198Y/KTC1815Y, NPN	2208606104
Q271	DTC114YS	2208622106
	RESISTORS	
R101L/R	Carbon Film 1 kohm 1/5 W J	3069102970
R102L/R	Carbon Film 91 kohm 1/5 W J	3069913970
R103L/R	Carbon Film 91 kohm 1/5 W J	3069913970
R104L/R	Carbon Film 820 ohm 1/5 W J	3069821970
R105L/R	Carbon Film 43 kohm 1/5 W J	3069433970
R106L/R	Carbon Film 560 kohm 1/5 W J	3069564970
R107L/R	Carbon Film 560 ohm 1/5 W J	3069561970
R108L/R	Carbon Film 100 kohm 1/5 W J	3069104970
R109/R110	Carbon Film 220 ohm 1/5 W J	3069221970
R120L/R	Carbon Film 470 ohm 1/5 W J	3069471970
R121L/R	Carbon Film 470 ohm 1/5 W J	3069471970
R122L/R	Carbon Film 470 ohm 1/5 W J	3069471970
R123L/R	Carbon Film 470 ohm 1/5 W J	3069471970
R124L/R	Carbon Film 1 kohm 1/5 W J	3069102970
R125L/R	Carbon Film 470 ohm 1/5 W J	3069471970

Ref. No.	Description	Mfr. Part No.
R126L/R	Carbon Film 470 ohm 1/5 W J	3069471970
R127L/R	Carbon Film 100 kohm 1/5 W J	3069104970
R128L/R	Carbon Film 470 ohm 1/5 W J	3069471970
R129L/R	Carbon Film 470 ohm 1/5 W J	3069471970
R130L/R	Carbon Film 100 kohm 1/5 W J	3069104970
R131L/R	Carbon Film 470 ohm 1/5 W J	3069471970
R132L/R	Carbon Film 100 kohm 1/5 W J	3069104970
R133-R138	Carbon Film 75 ohm 1/5 W J	3069750970
R139-R144	Carbon Film 100 ohm 1/5 W J	3069101970
R145	Carbon Film 75 ohm 1/5 W J	3069750970
R146	Carbon Film 10 ohm 1/5 W J	3069100970
R147/R148	Carbon Film 100 ohm 1/5 W J	3069101970
R149-R152	Carbon Film 3.3 kohm 1/5 W J	3069332970
R153/R154	Carbon Film 220 ohm 1/5 W J	3069221970
R155	Carbon Film 100 kohm 1/5 W J	3069104970
R156/R157	Carbon Film 220 ohm 1/5 W J	3069221970
R161L/R	Carbon Film 100 kohm 1/5 W J	3069104970
R162/R163	Carbon Film 220 ohm 1/5 W J	3069221970
R164L/R	Carbon Film 100 kohm 1/5 W J	3069104970
R165L/R	Carbon Film 100 kohm 1/5 W J	3069104970
R166/R167	Carbon Film 220 ohm 1/5 W J	3069221970
R168/R169	Carbon Film 100 ohm 1/5 W J	3069101970
R170/R171	Carbon Film 220 ohm 1/5 W J	3069221970
R172	Carbon Film 100 kohm 1/5 W J	3069104970
R201/R202	Metal Film 150 ohm 1 W J	3029151470
R203-R205	Carbon Film 22 kohm 1/5 W J	3069223970
R206	Carbon Film 10 Mohm 1/5 W J	3069106970
R207	Carbon Film 47 kohm 1/5 W J	3069473970
R208	Carbon Film 15 kohm 1/5 W J	3069153970
R209/R210	Carbon Film 7,5 kohm 1/5 W J	3069752970
R211	Carbon Film 47 kohm 1/5 W J	3069473970
R212	Carbon Film 15 kohm 1/5 W J	3069153970
R214-R216	Carbon Film 1 kohm 1/5 W J	3069102970
R241	Metal Film 4.7 ohm 2 W J	3029479570
R242/R243	Metal Film 10 ohm 2 W J	3029100570
R251C	Carbon Film 33 kohm 1/5 W J	3069333970
R251L/R	Carbon Film 33 kohm 1/5 W J	3069333970
R252C	Carbon Film 330 ohm 1/5 W J	3069331970
R252L/R	Carbon Film 330 ohm 1/5 W J	3069331970
R253C	Carbon Film 390 ohm 1/5 W J	3069391970
R253L/R	Carbon Film 390 ohm 1/5 W J	3069391970
R254C	Carbon Film 390 ohm 1/5 W J	3069391970
R254L/R	Carbon Film 390 ohm 1/5 W J	3069391970
R255C	Carbon Film 270 ohm 1/5 W J	3069271970
R255L/R	Carbon Film 270 ohm 1/5 W J	3069271970
R256C	Carbon Film 10 kohm 1/5 W J	3069103970
R256L/R	Carbon Film 10 kohm 1/5 W J	3069103970
R257C	Carbon Film 33 kohm 1/5 W J	3069333970
R257L/R	Carbon Film 33 kohm 1/5 W J	3069333970
R258C	Carbon Film 1.5 kohm 1/5 W J	3069152970
R258L/R	Carbon Film 1.5 kohm 1/5 W J	3069152970
R259C	Carbon Film 1.5 kohm 1/5 W J	3069152970
R259L/R	Carbon Film 1.5 kohm 1/5 W J	3069152970
R260C	Carbon Film 560 ohm 1/5 W J	3069561970
R260L/R	Carbon Film 560 ohm 1/5 W J	3069561970
R261C	Carbon Film 560 ohm 1/5 W J	3069561970
R261L/R	Carbon Film 560 ohm 1/5 W J	3069561970
R262C	Carbon Film 560 ohm 1/5 W J	3069561970
R262L/R	Carbon Film 560 ohm 1/5 W J	3069561970
R263C	Carbon Film 560 ohm 1/5 W J	3069561970

Ref. No.	Description				Mfr. Part No.
R263L/R	Carbon Film	560 ohm	1/5 W	J	3069561970
R264C	Carbon Film	560 ohm	1/5 W	J	3069561970
R264L/R	Carbon Film	560 ohm	1/5 W	J	3069561970
R265C	Carbon Film	1.3 kohm	1/5 W	J	3069132970
R265L/R	Carbon Film	1.3 kohm	1/5 W	J	3069132970
R266C	Carbon Film	22 kohm	1/5 W	J	3069223970
R266L/R	Carbon Film	22 kohm	1/5 W	J	3069223970
R267C	Carbon Film	22 kohm	1/5 W	J	3069223970
R267L/R	Carbon Film	22 kohm	1/5 W	J	3069223970
R268C	Carbon Film	100 ohm	1/5 W	J	3069101970
R268L/R	Carbon Film	100 ohm	1/5 W	J	3069101970
R269C	Carbon Film	100 ohm	1/5 W	J	3069101970
R269L/R	Carbon Film	100 ohm	1/5 W	J	3069101970
R270C	Carbon Film	1.21 kohm	1/5 W	F	3027121125
R270L/R	Carbon Film	1.21 kohm	1/5 W	F	3027121125
R271C	Carbon Film	470 ohm	1/5 W	J	3069471970
R271L/R	Carbon Film	442 ohm	1/5 W	F	3027442025
R272C	Carbon Film	82 ohm	1/5 W	J	3069820970
R272L/R	Carbon Film	82 ohm	1/5 W	J	3069820970
R273C	Cement	0.27 ohm	5 W	J	3059278782
R273L/R	Cement	0.27 ohm	5 W	J	3059278782
R274C	Cement	0.27 ohm	5 W	J	3059278782
R274L/R	Cement	0.27 ohm	5 W	J	3059278782
R275C	Carbon Film	1.8 kohm	1/5 W	J	3069182970
R275L/R	Carbon Film	1.8 kohm	1/5 W	J	3069182970
R276C	Carbon Film	1.5 kohm	1/5 W	J	3069152970
R276L/R	Carbon Film	1.5 kohm	1/5 W	J	3069152970
R277C	Carbon Film	910 ohm	1/5 W	J	3069911970
R277L/R	Carbon Film	910 ohm	1/5 W	J	3069911970
R278C	Carbon Film	6.8 kohm	1/5 W	J	3069682970
R278L/R	Carbon Film	6.8 kohm	1/5 W	J	3069682970
R279L/R	Carbon Film	22 ohm	1/5 W	J	3069220970
R280L/R	Carbon Film	22 ohm	1/5 W	J	3069220970
R281L/R	Metal Film	10 ohm	1 W	J	3029100470
R282C	Carbon Film	24 kohm	1/5 W	J	3069243970
R282L/R	Carbon Film	24 kohm	1/5 W	J	3069243970
R283	Carbon Film	68 kohm	1/5 W	J	3069683970
R284	Carbon Film	100 kohm	1/5 W	J	3069104970
R285	Carbon Film	3.3 kohm	1/5 W	J	3069332970
R286	Carbon Film	220 ohm	1/5 W	J	3069221970
R287	Carbon Film	10 kohm	1/5 W	J	3069103970
R288	Carbon Film	150 kohm	1/5 W	J	3069154970
R288C	Carbon Film	33 kohm	1/5 W	J	3069333970
R288L/R	Carbon Film	33 kohm	1/5 W	J	3069333970
R289C	Carbon Film	560 ohm	1/5 W	J	3069561970
R289L/R	Carbon Film	560 ohm	1/5 W	J	3069561970
R290C	Carbon Film	4.7 kohm	1/5 W	J	3069472970
R290L/R	Carbon Film	4.7 kohm	1/5 W	J	3069472970
R291	Carbon Film	1.5 kohm	1/5 W	J	3069152970
R292-R294	Carbon Film	4.7 kohm	1/5 W	J	3069472970

MISCELLANEOUS

44	Heatsink, Regulator TR.	7505206220
45	Heatsink, Regulator TR.	7505202410
46	Jack, RCA, 2P	4438108510
47	Jack, RCA, 6P	4438108710
48	Jack, RCA, 3P	4438108810
49	Jack, RCA, 2P, Yellow	4438114210
50	Terminal Speaker, 8P	4408105810
S1	Screw #2 BTC 3 X 8 B	8109230083
S5	Screw #2 WPTC 3 X 8 Y	8159230081
	Plate, Ground	4235007310

END OF P.C.B MAIN

P2 Ass'y P.C.B TUNER 054002007559

CAPACITORS

Ref. No.	Description				Mfr. Part No.
C258C	Mylar	0.047 uF	100 V	J	3679473120
C614L/R	Electrolytic SA	4.7 uF	50 V	M	3479247971
C615L/R	Mylar	0.047 uF	100 V	J	3679473120
C825	Electrolytic SG	47 uF	25 V	M	3479347041
C901	Ceramic Tubular	0.01 uF	50 V	Z	3519103935
C902	Electrolytic SG	100 uF	16 V	M	3479310131
C903	Electrolytic SA	0.47 uF	50 V	M	3479247871
C904	Ceramic Tubular	0.01 uF	50 V	Z	3519103935
C905	Ceramic Tubular	2200 uF	50 V	Z	3519223935
C906	Poly	470 pF	50 V	J	3619471110
C907	Ceramic Tubular	2200 uF	50 V	Z	3519223935
C908	Ceramic Tubular	10 pF	50 V	J	3519100935
C909	Ceramic Tubular	0.01 uF	50 V	Z	3519103935
C910/C911	Ceramic Tubular	2200 uF	50 V	Z	3519223935
C912	Electrolytic SA	4.7 uF	50 V	M	3479247971
C913	Ceramic Tubular	2200 uF	50 V	Z	3519223935
C914	Ceramic Tubular	47 pF	50 V	J	3519470935
C915/C916	Ceramic Disc	0.047 uF	50 V	Z	3579473530
C917	Electrolytic SA	2.2 uF	50 V	M	3479222971
C918	Electrolytic SA	4.7 uF	50 V	M	3479247971
C919	Ceramic Tubular	0.01 uF	50 V	Z	3519103935
C920	Electrolytic SG	47 uF	25 V	M	3479347041
C921	Electrolytic SA	2.2 uF	50 V	M	3479222971
C922	Electrolytic SA	3.3 uF	50 V	M	3479233971
C923	Electrolytic SA	10 uF	50 V	M	3479210071
C924	Ceramic Tubular	0.047 uF	50 V	Z	3519473935
C925	Ceramic Tubular	330 pF	50 V	J	3519331935
C926	Mylar	0.039 uF	100 V	J	3679393120
C927	Ceramic Tubular	330 pF	50 V	J	3519331935
C931	Electrolytic SA	4.7 uF	50 V	M	3479247971
C932	Electrolytic SA	220 uF	16 V	M	3479322131
C933	Ceramic Tubular	0.01 uF	50 V	Z	3519103935
C934/C935	Electrolytic SA	0.47 uF	50 V	M	3479247871
C936	Electrolytic SA	1 uF	50 V	M	3479210971
C937	Mylar	0.047 uF	100 V	J	3679473120
C938	Ceramic Tubular	680 pF	50 V	J	3519681935
C939	Electrolytic SA	10 uF	50 V	M	3479210071
C940L/R	Poly	390 pF	50 V	J	3619391110
C941L/R	Electrolytic SA	2.2 uF	50 V	M	3479222971
C943	Ceramic Tubular	0.01 uF	50 V	Z	3519103935
C944	Electrolytic SG	47 uF	25 V	M	3479347041
C945	Electrolytic SA	1 uF	50 V	M	3479210971
C946	Ceramic Tubular	2200 uF	50 V	Z	3519223935
C947/C948	Ceramic Tubular	0.01 uF	50 V	Z	3519103935
C949	Electrolytic SG	47 uF	25 V	M	3479347041
C950	Ceramic Tubular	270 pF	50 V	J	3519271935
C951	Ceramic Tubular	100 pF	50 V	J	3519101935
C954/C955	Ceramic Disc CH	33 pF	50 V	J	3528330210
C965-C967	Ceramic Disc	0.1 uF	50 V	Z	3579104530

FILTERS

CF1/CF2	Filter, Ceramic, SFE 10.7MS3GH	3908011011
CF3	Filter, Ceramic, SFZ450	3908001150

Ref. No.	Description	Mfr. Part No.
CF4	Filter, Ceramic, BFU450C4N	3908001020
CF5	Resonator, CSB456F11	3938001009
CF6	X-TAL, 7.2MHZ, HC-49/U	3908101031
	CONNECTORS	
CP102	Wafer 9P	4428525590
CP103	Wafer 5P	4428516410
CP104	Wafer 7P	4428516610
CP105	Wafer 12P	4428510720
CP291	Wafer 12P	4428510720
CP501	Wafer 9P	4428516810
CP704	Wafer 4P	4428516310
CP803	FPC Plug 12P	4428526246
CP901	Wafer 2P	4428508210
CP902	Wafer 2P	4428508210
	DIODES	
D603L/R	1N4148M, Switching	2058322101
D604L/R	1N4148M, Switching	2058322101
D605L/R	1N4148M, Switching	2058322101
D817	1N4148M, Switching	2058322101
D901-D905	1N4148M, Switching	2058322101
D906	Diode Zener, UZ 5.1BSB	2258599103
D907-D910	1N4148M, Switching	2058322101
	FRONT-END	
FE901	FM Tuner, FE407-A15	3928801970
	ICs	
IC802	LTV817, Photo-Coupler	2408000136
IC901	LM7001	2138017112
IC902	LA1266	2168017128
IC903	KA2265, MPX	2168002112
	COILS	
L251C	Coil, Inductor, 0.5 uH	2648001010
L601L/R	Coil, Inductor, 0.5 uH	2648001010
L906L/R	MPX 19 k/38 kHz, Coil, Black	2658001050
L901	Coil, AM ANT	2608201120
L902	Coil, AM OSC	2638201150
L903	Coil, FM QUAD DET A	2838501110
L904	Coil, FM QUAD DET B	2838501210
L905	Coil, AM IFT, P-7SB	2848001250
	TRANSISTORS	
Q601L/R	KTC3198Y/KTC1815Y, NPN	2208606104
Q901	KTC1923Y/KTC3194Y, NPN	2208406103
Q902	KTC2240BL/KTC3200, NPN	2208606108
Q903	FET, 2SK168D, N-CH.	2018211100
Q904/Q905	DTA114YS, PNP	2208222105
Q906	BKTA1266Y/KTA1015Y, PNP	2208206105
Q907	DTA114YS, PNP	2208222105
Q908L/R	KTD1302, NPN	2208606112
Q909	KTC3198Y/KTC1815Y, NPN	2208606104
	RESISTORS	
R279C	Carbon Film 22 ohm 1/5 W J	3069220970
R280C	Carbon Film 22 ohm 1/5 W J	3069220970
R281C	Metal Film 10 ohm 1 W J	3029100470
R615L/R	Carbon Film 390 ohm 1/5 W J	3069391970
R616L/R	Carbon Film 15 kohm 1/5 W J	3069153970
R617L/R	Cement 0.47 ohm 2 W J	3059478572
R618L/R	Carbon Film 22 kohm 1/5 W J	3069223970
R619L/R	Carbon Film 2.2 kohm 1/5 W J	3069222970
R620L/R	Carbon Film 22 ohm 1/5 W J	3069220970
R621L/R	Carbon Film 22 ohm 1/5 W J	3069220970
R622L/R	Carbon Film 22 ohm 1/5 W J	3069220970
R623L/R	Carbon Film 22 ohm 1/5 W J	3069220970
R840	Carbon Film 100 ohm 1/5 W J	3069101970
R841	Carbon Film 47 kohm 1/5 W J	3069473970
R842	Carbon Film 47 ohm 1/5 W J	3069470970
R843	Carbon Film 270 ohm 1/5 W J	3069271970
R844	Carbon Film 3.9 kohm 1/5 W J	3069392970
R901	Carbon Film 56 kohm 1/5 W J	3069563970
R902	Carbon Film 100 kohm 1/5 W J	3069104970
R903	Carbon Film 560 ohm 1/5 W J	3069561970
R904	Carbon Film 180 ohm 1/5 W J	3069181970
R905	Carbon Film 3.3 kohm 1/5 W J	3069332970
R906	Carbon Film 470 ohm 1/5 W J	3069471970
R907/R908	Carbon Film 330 ohm 1/5 W J	3069331970
R909	Carbon Film 560 ohm 1/5 W J	3069561970
R910/R911	Carbon Film 180 ohm 1/5 W J	3069181970
R912	Carbon Film 3.3 kohm 1/5 W J	3069332970
R913	Carbon Film 10 kohm 1/5 W J	3069103970
R914	Carbon Film 47 kohm 1/5 W J	3069473970
R915/R916	Carbon Film 100 kohm 1/5 W J	3069104970
R917	Carbon Film 68 kohm 1/5 W J	3069683970
R918	Carbon Film 4.3 kohm 1/5 W J	3069432970
R919	Carbon Film 10 kohm 1/5 W J	3069103970
R920	Carbon Film 24 kohm 1/5 W J	3069243970
R921	Carbon Film 10 kohm 1/5 W J	3069103970
R924	Carbon Film 82 ohm 1/5 W J	3069820970
R925	Carbon Film 1.8 kohm 1/5 W J	3069182970
R926	Carbon Film 100 kohm 1/5 W J	3069104970
R927-R929	Carbon Film 330 ohm 1/5 W J	3069331970
R930	Carbon Film 1 kohm 1/5 W J	3069102970
R931L/R	Carbon Film 180 kohm 1/5 W J	3069184970
R932L/R	Carbon Film 150 kohm 1/5 W J	3069154970
R933L/R	Carbon Film 3.3 kohm 1/5 W J	3069332970
R934L/R	Carbon Film 3.3 kohm 1/5 W J	3069332970
R935L/R	Carbon Film 3.3 kohm 1/5 W J	3069332970
R936	Carbon Film 1 kohm 1/5 W J	3069102970
R937	Carbon Film 1.5 kohm 1/5 W J	3069152970
R938	Carbon Film 82 ohm 1/5 W J	3069820970
R939	Carbon Film 820 ohm 1/5 W J	3069821970
R940-R942	Carbon Film 330 ohm 1/5 W J	3069331970
R943-R945	Carbon Film 100 ohm 1/5 W J	3069101970
R946	Carbon Film 2.7 kohm 1/5 W J	3069272970
R947/R948	Carbon Film 270 ohm 1/5 W J	3069271970
R949/R950	Carbon Film 4.7 kohm 1/5 W J	3069472970
R951/R952	Carbon Film 10 kohm 1/5 W J	3069103970
R955	Carbon Film 100 kohm 1/5 W J	3069104970
R956	Carbon Film 3.3 kohm 1/5 W J	3069332970
R957	Carbon Film 47 kohm 1/5 W J	3069473970
R958	Carbon Film 10 kohm 1/5 W J	3069103970
R959/R960	Carbon Film 4.7 kohm 1/5 W J	3069472970
R960L/R	Carbon Film 1 kohm 1/5 W J	3069102970
R961L/R	Carbon Film 1 kohm 1/5 W J	3069102970
R962C	Carbon Film 1 kohm 1/5 W J	3069102970
R963L/R	Carbon Film 1 kohm 1/5 W J	3069102970

Ref. No.	Description	Mfr. Part No.
	TRIMMERS	
TC901	Capacitor, Trimmer, 20 pF	3838001160
TC902	Capacitor, Trimmer, 10 pF	3838001150
	VARACTOR	
VD901	KV1236Z, Diode, Varactor	2058819106
	SEMI FIXED RESISTORS	
VR901	Semi, 50 k(B)	3248050343
VR902	Semi, 50 k(B)	3248050343
VR903	Semi, 200 k (B)	3248020443
	MISCELLANEOUS	
G901	Plate, Ground	4235007310
51	Terminal Speaker, 4P	4408105410
52	Terminal Speaker, 2P	4408107010
53	Jack, Multiroom	4438006510
54	Jack, RCA, 4P	4438108610
55	Terminal, Antenna	4408108310
S5	Screw #2 WPTC 3 X 8 Y	8159230081
	END OF P.C.B TUNER	

P2-1 Ass'y P.C.B POWER SUPPLY 054002007561

Ref. No.	Description				Mfr. Part No.
	CAPACITORS				
C701	Ceramic Disc	0.0047 uF	400 V	Z	3549472410
C702/C703	Ceramic Tubular	0.047 uF	50 V	Z	3519473935
C704	Electrolytic SG	220 uF	16 V	M	3479322131
C705	Electrolytic SA	1 uF	50 V	M	3479210971
C706	Electrolytic SG	100 uF	50 V	M	3479310171
C707-C711	Mylar	0.047 uF	100 V	J	3679473120
C712	Electrolytic SG	3300 uF	35 V	M	3409333262
C713	Electrolytic SG	2200 uF	35 V	M	3409322269
	CONNECTORS				
CN704	Lead Ass'y, 4P, 160 mm				436204163332
CP101	Plug LV AC, 3P				4428525790
CP602	Wafer 7P				4428516610
CP701	Plug LV AC, 2P				4428525780
CP702	Plug LV AC, 3P				4428525790
CP703	Wafer 4P				4428505610
CP801	Wafer 8P				4428516710
	DIODES				
D701-D704	1N4002, Rectifier				2258100135
D705/D706	Diode Zener, UZ 5.1BSB				2258599103
D707/D708	1N4002, Rectifier				2258100135
D709	Diode Zener, UZ 7.5BSC				2258599130
D710/D711	Diode Zener, UZ 15.0BSC				2258599109
D712-D715	1N5402, Rectifier				2058100136
D716	Diode Zener, UZ 5.1BSB				2258599103
	IC				
IC701	GL7806, Regulator				2168601110
	TRANSISTOR				
Q701	KTC3198Y/KTC1815Y, NPN				2208606104

Ref. No.	Description				Mfr. Part No.
	RESISTORS				
R701	Metal Film	10 ohm	1 W	J	3029100470
R702	Carbon Film	2 kohm	1/5 W	J	3069202970
R703	Carbon Film	330 ohm	1/5 W	J	3069331970
R704	Carbon Film	15 kohm	1/5 W	J	3069153970
R706	Carbon Film	6.8 kohm	1/5 W	J	3069682970
R707	Carbon Film	1 kohm	1/5 W	J	3069102970
R708	Carbon Film	10 kohm	1/5 W	J	3069103970
R709	Carbon Film	3.3 Mohm	1/2 W	J	3009335373
	RELAY				
RLY701	HR-CR313(TV-3)				5528042002
	MISCELLANEOUS				
F701	Fuse, SB 4A 125V				5508102921
F702	Fuse, SB 4A 125V				5508102921
F703	Fuse, SB 6A 125V				5508103121
F704	Fuse, NB 315mA 125V				5508201421
G701	Plate, Ground				4235007310
G702	Plate, Ground				4235007310
63	Heatsink (H:30), Regulator TR.				7505206210
64	Tie locking				6528002810
65	Outlet, 3P				4448102910
S1	Screw #2 BTC 3 X 8 B				8109230083
S5	Screw #2 WPTC 3 X 8 Y				8159230081
	Pin, Solder				4228001410
	Clip Fuse				4255001010

END OF P.C.B POWER SUPPLY

P2-2 Ass'y P.C.B SURROUND 054002007563

Ref. No.	Description				Mfr. Part No.
	CAPACITORS				
C601L/R	Ceramic Tubular	2200 pF	50 V	J	3519222935
C602L/R	Electrolytic SA	2.2 uF	50 V	M	3479222971
C603L/R	Ceramic Tubular	100 pF	50 V	J	3519101935
C604L/R	Electrolytic SA	2.2 uF	50 V	M	3479222971
C605L/R	Ceramic Tubular	4.7 pF	50 V	J	3519047935
C606L/R	Electrolytic SA	47 uF	35 V	M	3479247061
C607	Mylar	0.1 uF	63 V	K	3679104297
C608/C909	Electrolytic SA	10 uF	50 V	M	3479210071
C610/C611	Electrolytic SA	10 uF	50 V	M	3479210071
C612/C613	Ceramic Tubular	2200 uF	50 V	Z	3519222935
	CONNECTORS				
CN601	Lead Ass'y, 3P, 180 mm				436203183332
CN602	Lead Ass'y, 7P, 350 mm				436207353332
	DIODES				
D601/602	1N4002, Rectifier				2258100135
D606	1N4002, Rectifier				2258100135
	IC				
IC601	STK4132 II, Hybrid IC				2178317129

Ref. No.	Description				Mfr. Part No.
	RESISTORS				
R601L/R	Carbon Film	1 kohm	1/5 W	J	3069102970
R602L/R	Carbon Film	47 kohm	1/5 W	J	3069473970
R603L/R	Carbon Film	2 kohm	1/5 W	J	3069202970
R604L/R	Carbon Film	43 kohm	1/5 W	J	3069433970
R605L/R	Metal Film	2.2 kohm	1 W	J	3029222470
R606L/R	Carbon Film	1.3 kohm	1/5 W	J	3069132970
R607	Carbon Film	10 ohm	1/5 W	J	3069100970
R608	Carbon Film	1.5 kohm	1/5 W	J	3069152970
R609	Carbon Film	1 kohm	1/5 W	J	3069102970
R610	Carbon Film	10 kohm	1/5 W	J	3069103970
R611	Carbon Film	390 kohm	1/5 W	J	3069394970
R612	Carbon Film	68 kohm	1/5 W	J	3069683970
R613	Carbon Film	220 kohm	1/5 W	J	3069224970
R614	Carbon Film	4.7 kohm	1/5 W	J	3069472970
R620	Carbon Film	100 ohm	1/5 W	J	3069101970
	MISCELLANEOUS				
	Plate, Ground				4235007310
S5	Screw #2 WPTC 3 X 8 Y				8159230081
	END OF P.C.B SURROUND				

P2-3 Ass'y P.C.B TONE 054002007565

Ref. No.	Description				Mfr. Part No.
	CAPACITORS				
C402L/R	Ceramic Tubular	22 pF	50 V	J	3519220935
C403/C404	Electrolytic SG	47 uF	25 V	M	3479347041
C405L/R	Electrolytic SA	10 uF	50 V	M	3479210071
C406L/R	Electrolytic SA	10 uF	50 V	M	3479210071
C407L/R	Ceramic Disc	39 pF	50 V	J	3579390130
C409L/R	Ceramic Tubular	39 pF	50 V	J	3519390935
C410L/R	Electrolytic SA	10 uF	50 V	M	3479210071
C411/C412	Electrolytic SG	47 uF	25 V	M	3479347041
C413L/R	Electrolytic SA	10 uF	50 V	M	3479210071
C414L/R	Mylar	0.015 uF	100 V	J	3679153120
C415L/R	Mylar	0.082 uF	100 V	J	3679823120
C417L/R	Mylar	0.0018 uF	100 V	J	3679182120
C418L/R	Mylar	0.012 uF	100 V	J	3679123120
	CONNECTORS				
CN401	Lead Ass'y, 10P, 220 mm				436210223332
CN402	Lead Ass'y, 5P, 400 mm				436205403332
	DIODE				
D401	1N4148M, Switching				2058322101
	ICs				
IC401/IC402	KIA4559P/KIA75559P, OP Amp				2168206104
	TRANSISTORS				
Q401	BKTA1266Y/KTA1015Y, PNP				2208206105
Q402	DTC114YS				2208622106
	RESISTORS				
R401L/R	Carbon Film	100 kohm	1/5 W	J	3069104970
R402L/R	Carbon Film	820 ohm	1/5 W	J	3069821970
R403L/R	Carbon Film	5.1 kohm	1/5 W	J	3069512970
R404L/R	Carbon Film	560 ohm	1/5 W	J	3069561970
R405L/R	Carbon Film	100 kohm	1/5 W	J	3069104970
R406L/R	Carbon Film	1 kohm	1/5 W	J	3069102970
R407L/R	Carbon Film	100 kohm	1/5 W	J	3069104970
R408L/R	Carbon Film	100 kohm	1/5 W	J	3069104970
R409L/R	Carbon Film	1 Mohm	1/5 W	J	3069105970
R410/R411	Carbon Film	220 ohm	1/5 W	J	3069221970
R412L/R	Carbon Film	560 ohm	1/5 W	J	3069561970
R413L/R	Carbon Film	100 kohm	1/5 W	J	3069104970
R414/R415	Carbon Film	220 ohm	1/5 W	J	3069221970
R416L/R	Carbon Film	22 kohm	1/5 W	J	3069223970
R417L/R	Carbon Film	3.3 kohm	1/5 W	J	3069332970
R418L/R	Carbon Film	3.6 kohm	1/5 W	J	3069362970
R419L/R	Carbon Film	6.2 kohm	1/5 W	J	3069622970
R420L/R	Carbon Film	1 kohm	1/5 W	J	3069102970
R421L/R	Carbon Film	1.2 kohm	1/5 W	J	3069122970
R422L/R	Carbon Film	1.2 kohm	1/5 W	J	3069122970
R423	Carbon Film	12 kohm	1/5 W	J	3069123970
R424	Carbon Film	100 ohm	1/5 W	J	3069101970
R425/R426	Carbon Film	3.6 kohm	1/5 W	J	3069362970
R431L/R	Carbon Film	470 ohm	1/5 W	J	3069471970
	RELAY				
RLY401	Relay, G5V-2-H1				5528040001
	MISCELLANEOUS				
19	Volume Rotary (Bass/Treble)				3208049510
20	Volume Rotary (Balance)				3208052010
21	Jack, RCA, 3P				4438109710
S1	Screw #2 BTC 3 X 8 B				8109230083
	END OF ASS'Y P.C.B TONE				

P2-4 Ass'y P. C. B VOLUME 054002007567

Ref. No.	Description				Mfr. Part No.
	CAPACITORS				
C301L/R	Ceramic Tubular	470 pF	50 V	J	3519471935
C302L/R	Mylar	0.082 uF	100 V	J	3679823120
C303	Electrolytic SG	47 uF	25 V	M	3479347041
C304/C305	Electrolytic SG	100 uF	10 V	M	3479310121
C306	Ceramic Disc	0.047 uF	50 V	Z	3579473530
	CONNECTOR				
CP502	FPC Plug, 18P				4428526305
	IC				
IC301	TA7291S				2168007204
	RESISTORS				
R301L/R	Carbon Film	51 kohm	1/5 W	J	3069513970
R302L/R	Carbon Film	6.2 kohm	1/5 W	J	3069622970
R303/R304	Carbon Film	6.2 kohm	1/5 W	J	3069622970
R305	Carbon Film	33 ohm	1/5 W	J	3069330970
R306	Carbon Film	15 kohm	1/5 W	J	3069153970

Ref. No.	Description				Mfr. Part No.
R307	Carbon Film	4.7 kohm	1/5 W	J	3069472970
	MISCELLANEOUS				
W301	Wire Lug, #24, Black, 140mm				152624101457
22 (SW301)	Switch Push				4628059610
23 (VR301)	Volume Motor				3228019410
S1	Screw #2 BTC 3 X 8 B				8109230083
S3	Screw #2 BTC 3 X 6 B				8109230063
	END OF ASS'Y P.C.B VOLUME				

P3 Ass'y P.C.B FRONT 054002007550

Ref. No.	Description				Mfr. Part No.
	CAPACITORS				
C801	CAP, FMOH473ZTP16, Backup		5.5 V		3409347314
C802	Electrolytic SG	47 uF	25 V	M	3479347041
C803	Ceramic Tubular	0.1 uF	50 V	Z	3519104935
C804	Electrolytic SA	10 uF	50 V	M	3479210071
C805	Ceramic Tubular	12 pF	50 V	J	3519120935
C806	Electrolytic SA	33 uF	25 V	M	3479233041
C807-C814	Ceramic Tubular	100 pF	50 V	J	3519101935
C815/C816	Ceramic Tubular	0.047 uF	50 V	Z	3519473935
C817-C821	Ceramic Tubular	100 pF	50 V	J	3519101935
C822	Ceramic Tubular	0.1 uF	50 V	Z	3519104935
C824	Ceramic Tubular	0.1 uF	50 V	Z	3519104935
	CONNECTORS				
CN801	Lead Ass'y, 8P 350 mm				436208353332
CN802	FPC Plug 15P				4428526690
CN803	FPC Plug 12P				4428526246
	DIODES				
D801-D816	1N4148M, Switching				2058322101
LED801	LED, SPR54MVW3, Red/Green				2308222302
	IC				
IC801	CPX82220-107Q, CPU				2138322182
	TRANSISTORS				
Q801	MPSA06Y, NPN				2208606114
Q802	KTC3198Y/KTC1815Y, NPN				2208606104
Q803	DTA114YS, PNP				2208222105
	RESISTORS				
R801	Carbon Film	10 kohm	1/5 W	J	3069103970
R802	Carbon Film	180 ohm	1/5 W	J	3069181970
R803	Carbon Film	150 ohm	1/5 W	J	3069151970
R804	Carbon Film	22 kohm	1/5 W	J	3069223970
R805	Carbon Film	47 kohm	1/5 W	J	3069473970
R806	Carbon Film	10 kohm	1/5 W	J	3069103970
R807-R814	Carbon Film	1 kohm	1/5 W	J	3069102970
R815-R822	Carbon Film	47 kohm	1/5 W	J	3069473970
R823	Carbon Film	1 kohm	1/5 W	J	3069224970
R825	Carbon Film	3.3 kohm	1/5 W	J	3069332970
R827-R831	Carbon Film	100 ohm	1/5 W	J	3069101970
R832	Carbon Film	1 kohm	1/5 W	J	3069102970
R834/R835	Carbon Film	47 kohm	1/5 W	J	3069473970
R836	Carbon Film	470 ohm	1/5 W	J	3069471970
R837	Carbon Film	1 kohm	1/5 W	J	3069102970
R838	Carbon Film	330 ohm	1/5 W	J	3069331970
R839	Carbon Film	47 kohm	1/5 W	J	3069473970
R844/R845	Carbon Film	3.3 ohm	1/5 W	J	3069339970
	RESONATOR				
X-TAL801	Resonator, CST10.00MTW				3938131750
	MISCELLANEOUS				
24 (SW801)	Switch Push				4628054410
28	Switch Tact				4658003710
29 (SEN801)	Remote Sensor, TFMT5380 (38 kHZ)				2408005001
30 (FIP801)	FIP, 12 LM 8, FL Display				2328130301
S1	Screw #2 BTC 3 X 8 B				8109230083
	END OF P.C.B FRONT				

P3-1 Ass'y P.C.B DOLBY 054002007552

Ref. No.	Description				Mfr. Part No.
	CAPACITORS				
C501/C502	Electrolytic SG	47 uF	25 V	M	3479347041
C503L/R	Electrolytic SA	4.7 uF	50 V	M	3479247971
C504	Electrolytic SA	3.3 uF	50 V	M	3479233971
C505	Electrolytic SA	10 uF	50 V	M	3479210071
C507	Electrolytic SA	3.3 uF	50 V	M	3479233971
C508/C509	Electrolytic SG	47 uF	25 V	M	3479347041
C510	Electrolytic SA	2.2 uF	50 V	M	3479222971
C511	Electrolytic SA	3.3 uF	50 V	M	3479233971
C512	Mylar	0.15 uF	63 V	K	3679154297
C513	Ceramic Tubular	150 pF	50 V	J	3519151935
C514	Electrolytic SG	220 uF	10 V	M	3479322121
C515	Poly	120 pF	50 V	J	3619121110
C516	Poly	680 pF	50 V	J	3619681110
C517	Electrolytic SA	4.7 uF	50 V	M	3479247971
C518	Electrolytic SG	47 uF	50 V	M	3479347071
C519	Electrolytic SG	470 uF	10 V	M	3479347121
C520	Poly	680 pF	50 V	J	3619681110
C521	Mylar	0.022 uF	100 V	J	3679223120
C522	Poly	150 pF	50 V	J	3619151110
C523-C525	Electrolytic SG	220 uF	16 V	M	3479322131
C526/C527	Ceramic Tubular	0.1 uF	50 V	Z	3519104935
C528	Electrolytic SA	220 uF	16 V	M	3479322131
C529	Mylar	0.22 uF	63 V	K	3679224297
C530	Mylar	0.068 uF	100 V	J	3679683120
C531	Mylar	0.0039 uF	100 V	J	3679392120
C532	Mylar	0.0047 uF	100 V	J	3679472120
C533	Mylar	0.033 uF	100 V	J	3679333120
C534	Electrolytic SA	10 uF	50 V	M	3479210071
C535	Electrolytic SA	1 uF	50 V	M	3479210971
C536/C537	Electrolytic SA	10 uF	50 V	M	3479210071
C538	Ceramic Tubular	470 pF	50 V	J	3519471935
C539L/R	Electrolytic SA	10 uF	50 V	M	3479210071
C540	Ceramic Tubular	680 pF	50 V	J	3519681935
C541	Mylar	0.0056 uF	100 V	J	3679562120
C542	Mylar	0.0047 uF	100 V	J	3679472120
C543	Electrolytic SA	10 uF	50 V	M	3479210071
C544	Ceramic Tubular	0.1 uF	50 V	Z	3519104935
C545-C547	Ceramic Tubular	100 pF	50 V	J	3519101935
C548	Ceramic Tubular	0.01 uF	50 V	Z	3519103935
C549	Electrolytic SA	1 uF	50 V	M	3479210971
C550/C551	Electrolytic SG	47 uF	25 V	M	3479347041
C553/C554	Ceramic Tubular	100 pF	50 V	J	3519101935
C555/C556	Electrolytic SG	47 uF	25 V	M	3479347041

Ref. No.	Description				Mfr. Part No.
C557L/R	Electrolytic SA	1 uF	50 V	M	3479210971
C558L/R	Ceramic Tubular	0.001 uF	50 V	Z	3519102935
C559L/R	Electrolytic SA	3.3 uF	50 V	M	3479233971
C561/C562	Electrolytic SG	47 uF	25 V	M	3479347041
C563L/R	Electrolytic SA	1 uF	50 V	M	3479210971
C564L/R	Ceramic Tubular	0.001 uF	50 V	Z	3519102935
C565L/R	Electrolytic SA	3.3 uF	50 V	M	3479233971
C566/C567	Electrolytic SG	47 uF	25 V	M	3479347041
C568-C570	Ceramic Tubular	100 pF	50 V	J	3519101935
C571	Electrolytic SA	10 uF	50 V	M	3479210071
C572	Electrolytic SG	220 uF	16 V	M	3479322131
C573	Electrolytic SA	10 uF	50 V	M	3479210071
	CONNECTORS				
CN501	FPC Plug 19P				4428526310
CN502	FPC Plug 18P				4428526305
CN503	Lead Ass'y, 9P, 450 mm				436209453332
CP401	Wafer 10P				4428516910
CP581	Wafer 2P				4428508210
CP601	Wafer 3P				4428516210
CP802	FPC Plug 15P				4428526270
	DIODES				
D501	Diode Zener, UZ 12.0BSC				2258599116
D502-D504	1N4148M, Switching				2058322101
	ICs				
IC501/IC502	KIA4559P/KIA75559P, OP Amp				2168206104
IC503	LV-1000NA				2168017142
IC504	DRAM, uPD61256-08				2138430001
IC505	MC14094BCP				2138009115
IC506	LC7822				2168017139
IC507	TC9176P				2138007124
IC508/IC509	KIA4559P/KIA75559P, OP Amp				2168206104
	TRANSISTORS				
Q501	BKTA1266Y/KTA1015Y, PNP				2208206105
Q502	DTC114YS				2208622106
Q503	DTA114YS, PNP				2208222105
Q504/Q505	DTC114YS				2208622106
Q506	KTC3198Y/KTC1815Y, NPN				2208606104
Q507	DTA114YS, PNP				2208222105
Q508L/R	KTD1302, NPN				2208606112
Q509	KTC3198Y/KTC1815Y, NPN				2208606104
Q510	DTA114YS, PNP				2208222105
Q511	KTD1302, NPN				2208606112
Q512	KTC3198Y/KTC1815Y, NPN				2208606104
Q513	DTA114YS, PNP				2208222105
Q514L/R	KTD1302, NPN				2208606112
Q515	KTC3198Y/KTC1815Y, NPN				2208606104
	RESISTORS				
R501/R502	Carbon Film	100 ohm	1/5 W	J	3069101970
R503	Carbon Film	10 kohm	1/5 W	J	3069103970
R504L	Carbon Film	10 kohm	1/5 W	J	3069103970
R504R	Carbon Film	22 kohm	1/5 W	J	3069223970
R505L/R	Carbon Film	22 kohm	1/5 W	J	3069223970
R506	Carbon Film	22 kohm	1/5 W	J	3069223970
R507	Carbon Film	1.5 kohm	1/5 W	J	3069152970
R508	Carbon Film	750 ohm	1/5 W	J	3069751970

Ref. No.	Description				Mfr. Part No.
R509	Carbon Film	1.8 kohm	1/5 W	J	3069182970
R510	Carbon Film	3.9 kohm	1/5 W	J	3069392970
R511	Carbon Film	4.7 kohm	1/5 W	J	3069472970
R515	Carbon Film	3.3 kohm	1/5 W	J	3069332970
R516/R517	Carbon Film	100 ohm	1/5 W	J	3069101970
R519	Carbon Film	10 kohm	1/5 W	J	3069103970
R520	Carbon Film	100 kohm	1/5 W	J	3069104970
R521	Carbon Film	3.9 kohm	1/5 W	J	3069392970
R522L/R	Carbon Film	6.8 kohm	1/5 W	J	3069682970
R523L/R	Carbon Film	100 kohm	1/5 W	J	3069104970
R524	Metal Film	56 ohm	1 W	J	3029560470
R525	Carbon Film	56 ohm	1/5 W	J	3069560970
R526	Carbon Film	1 Mohm	1/5 W	J	3069105970
R527	Carbon Film	47 kohm	1/5 W	J	3069473970
R528	Carbon Film	3.3 kohm	1/5 W	J	3069332970
R529	Carbon Film	15 kohm	1/5 W	J	3069153970
R530	Carbon Film	8.2 kohm	1/5 W	J	3069822970
R531	Carbon Film	100 kohm	1/5 W	J	3069104970
R532	Carbon Film	39 kohm	1/5 W	J	3069393970
R533/R534	Carbon Film	8.2 kohm	1/5 W	J	3069822970
R535	Carbon Film	47 kohm	1/5 W	J	3069473970
R536	Carbon Film	5.6 kohm	1/5 W	J	3069562970
R537	Carbon Film	1 kohm	1/5 W	J	3069102970
R538	Carbon Film	10 kohm	1/5 W	J	3069103970
R539-R541	Carbon Film	1 kohm	1/5 W	J	3069102970
R542	Carbon Film	220 ohm	1/5 W	J	3069221970
R543	Carbon Film	100 kohm	1/5 W	J	3069104970
R544	Carbon Film	220 ohm	1/5 W	J	3069221970
R545-R547	Carbon Film	1 kohm	1/5 W	J	3069102970
R548/R549	Carbon Film	220 ohm	1/5 W	J	3069221970
R550-R552	Carbon Film	1 kohm	1/5 W	J	3069102970
R553L/R	Carbon Film	680 ohm	1/5 W	J	3069681970
R554L/R	Carbon Film	1 Mohm	1/5 W	J	3069105970
R555L/R	Carbon Film	4.7 kohm	1/5 W	J	3069472970
R556L/R	Carbon Film	1.5 kohm	1/5 W	J	3069152970
R557L/R	Carbon Film	2 kohm	1/5 W	J	3069202970
R558/R559	Carbon Film	100 ohm	1/5 W	J	3069101970
R560L/R	Carbon Film	680 ohm	1/5 W	J	3069681970
R561L/R	Carbon Film	1 Mohm	1/5 W	J	3069105970
R562L/R	Carbon Film	4.7 kohm	1/5 W	J	3069472970
R563L/R	Carbon Film	1.5 kohm	1/5 W	J	3069152970
R564L/R	Carbon Film	2 kohm	1/5 W	J	3069202970
R565/R566	Carbon Film	100 ohm	1/5 W	J	3069101970
R567	Carbon Film	2.2 kohm	1/5 W	J	3069222970
R568L/R	Carbon Film	2.2 kohm	1/5 W	J	3069222970
R569-R571	Carbon Film	2.2 kohm	1/5 W	J	3069222970
R572L/R	Carbon Film	2.2 kohm	1/5 W	J	3069222970
R573	Carbon Film	820 ohm	1/5 W	J	3069821970
R574	Carbon Film	1 kohm	1/5 W	J	3069102970
R575L/R	Carbon Film	1 kohm	1/5 W	J	3069102970
R576/R577	Carbon Film	220 kohm	1/5 W	J	3069224970
	SEMI FIXED RESISTOR				
VR501	Semi, 10 k (B)				3248010343
	RESONATOR				
X-TAL501	Resonator, CST8.00MTW				3938131590
	MISCELLANEOUS				
W501	CTB 0135 LV DIAMOND DL B#16				4359855035

Ref. No.	Description				Mfr. Part No.
	END OF P.C.B DOLBY				
P3-2	**Ass'y P.C.B HEADPHONE**				**054002007554**
	RESISTORS				
R295L/R	Metal Film	470 ohm	2 W	J	3029471570
C291L/R	Ceramic Tubular	560 pF	50 V	J	3519561935
	CONNECTOR				
CN291	Lead Ass'y, 12P, 350 mm				435112353401
	MISCELLANEOUS				
25 (SW291)	Switch Push				4628043810
26 (SW292)	Switch Push				4628049210
27	Jack, Phone				4438005010
	END OF P.C.B HEADPHONE				
P3-3	**Ass'y P.C.B VOLUME LED**				**054002007556**
CNT581	Lead Ass'y , 2P, 180 mm, 2.5 mm Pitch				4358102184
LED581	LED, SLC-22VRS, Green				2308220324
	END OF P.C.B VOLUME LED				

The following parts are only for European version.

Ref. No.	Description				Mfr. Part No.
P1	**Ass'y P.C.B MAIN**				**054002007932**
C101L/R	Ceramic Tubular	100 pF	50 V	J	3519101935
C104L/R	Ceramic Tubular	2200 pF	50 V	J	3519222935
C120L/R	Ceramic Tubular	100 pF	50 V	J	3519101935
C121L/R	Ceramic Tubular	100 pF	50 V	J	3519101935
C122L/R	Ceramic Tubular	100 pF	50 V	J	3519101935
C123L/R	Ceramic Tubular	100 pF	50 V	J	3519101935
C124L/R	Ceramic Tubular	100 pF	50 V	J	3519101935
C125L/R	Ceramic Tubular	100 pF	50 V	J	3519101935
C126L/R	Ceramic Tubular	100 pF	50 V	J	3519101935
C127L/R	Ceramic Tubular	100 pF	50 V	J	3519101935
C128L/R	Ceramic Tubular	100 pF	50 V	J	3519101935
C129L/R	Ceramic Tubular	100 pF	50 V	J	3519101935
C130L/R	Ceramic Tubular	100 pF	50 V	J	3519101935
C131L/R	Ceramic Tubular	100 pF	50 V	J	3519101935
C132L/R	Ceramic Tubular	100 pF	50 V	J	3519101935
C133L/R	Ceramic Tubular	100 pF	50 V	J	3519101935
C134L/R	Ceramic Tubular	100 pF	50 V	J	3519101935
C135L/R	Ceramic Tubular	100 pF	50 V	J	3519101935
C136L/R	Ceramic Tubular	100 pF	50 V	J	3519101935
C137L/R	Ceramic Tubular	100 pF	50 V	J	3519101935
C138L/R	Ceramic Tubular	100 pF	50 V	J	3519101935
C139L/R	Ceramic Tubular	100 pF	50 V	J	3519101935
C259	Ceramic Tubular	2200 pF	50 V	J	3519222935
C260	Ceramic Tubular	3300 pF	50 V	J	3519332935
C260L/R	Ceramic Tubular	2200 pF	50 V	J	3519222935
C261L/R	Ceramic Tubular	2200 pF	50 V	J	3519222935
C262L/R	Ceramic Tubular	2200 pF	50 V	J	3519222935
P2	**Ass'y P.C.B TUNER**				**054002007939**
C616-C617	Ceramic Tubular	3300 pF	50 V	J	3519332935
C618	Ceramic Tubular	2200 pF	50 V	J	3519222935
C928D	Ceramic Tubular	82 pF	50 V	J	3519820935
C929D	Ceramic Tubular	100 pF	50 V	J	3519101935
C940L/R	Poly	180 pF	50 V	J	3619181110
C960L/R	Ceramic Tubular	100 pF	50 V	J	3519101935
C961L/R	Ceramic Tubular	100 pF	50 V	J	3519101935
C962C	Ceramic Tubular	100 pF	50 V	J	3519101935
C963L/R	Ceramic Tubular	100 pF	50 V	J	3519101935
FE901	FM Tuner, FE407-G60				3928801890
L101L/R	Coil, Inductor, 50 uH				2648601470
R922D	Carbon Film	27 kohm	1/5 W	J	3069273970
R923	Carbon Film	27 kohm	1/5 W	J	3069273970
55	Terminal, Antenna				4408108210
P2-1	**Ass'y P.C.B POWER SUPPLY**				**054002007941**
F701	Fuse, TL 4A 250V				5508302535
F702	Fuse, TL 4A 250V				5508302535
F703	Fuse, TL 4A 250V				5508302535
F704	Fuse, TL 500mA 250V				5508301635
F705	Fuse, TL 2.5A 250V				5508302535
65	Outlet, 1P				4448103610
P2-3	**Ass'y P.C.B TONE**				**054002007943**
C431L/R	Ceramic Tubular	100 pF	50 V	J	3519101935
C432L/R	Ceramic Tubular	100 pF	50 V	J	3519101935
C433	Ceramic Tubular	100 pF	50 V	J	3519101935
P2-4	**Ass'y P. C. B VOLUME**				**054002007945**
P3	**Ass'y P.C.B FRONT**				**054002007936**

SEMICONDUCTOR LEAD IDENTIFICATION & INTERNAL DIAGRAM

SSM-2126A : IC201

Package Outline

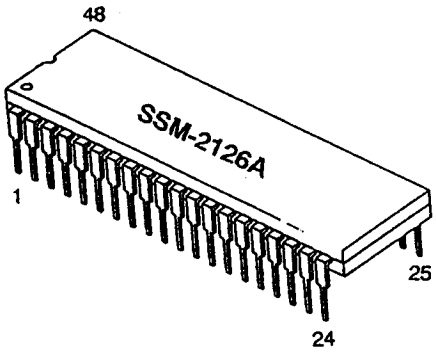

Block Diagram

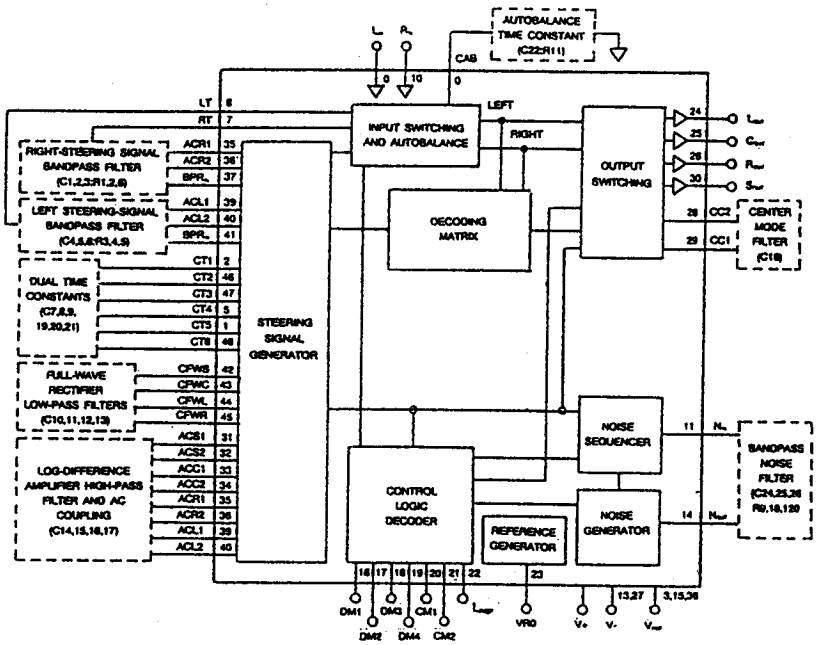

TC9176 : IC507

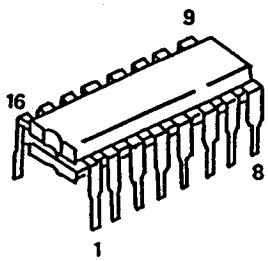

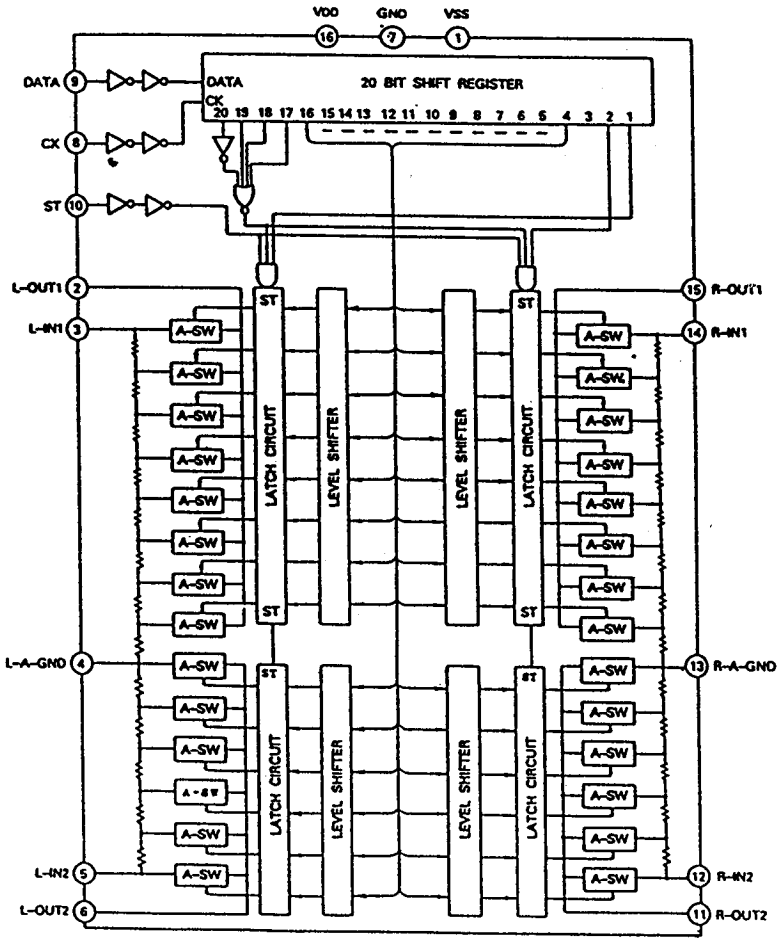

MC14094 : IC105, IC202, IC505

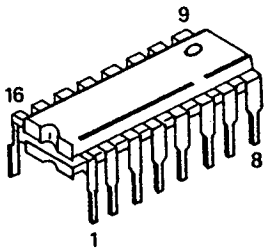

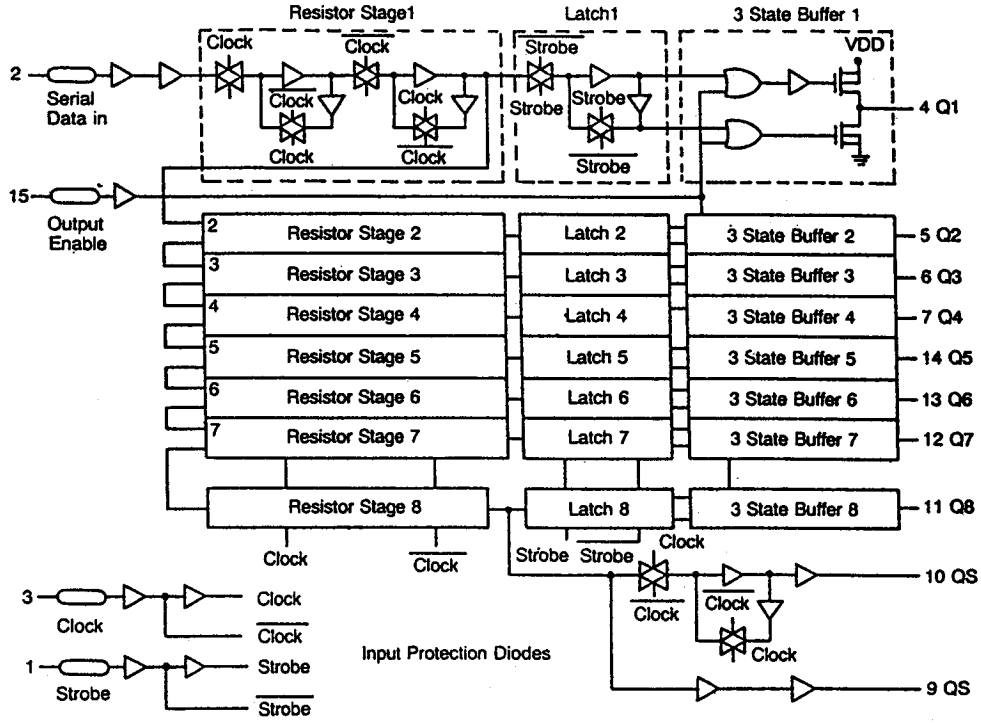

TA7291S : IC301

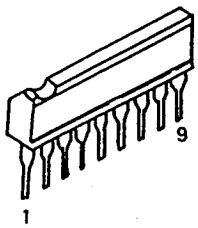

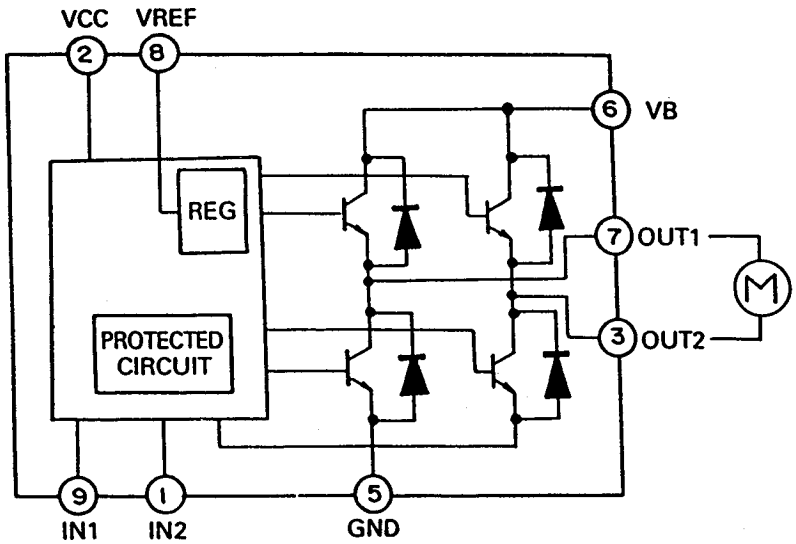

GD78XX : IC241, IC242, IC701

Front View

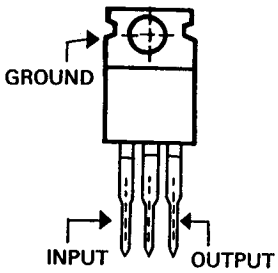

Block Diagram

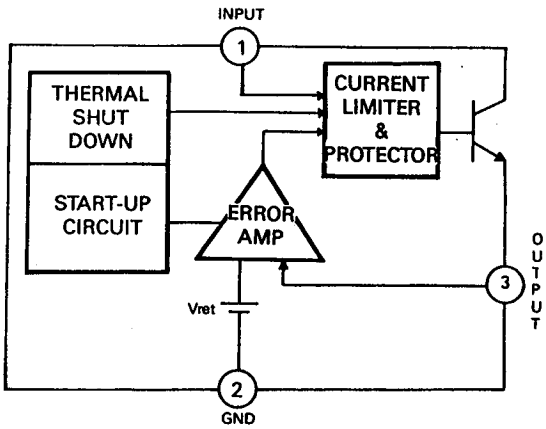

LV-1000NA: IC503 (Dolby Surround Passive decoder)

1. Pin No. and Application Circuit

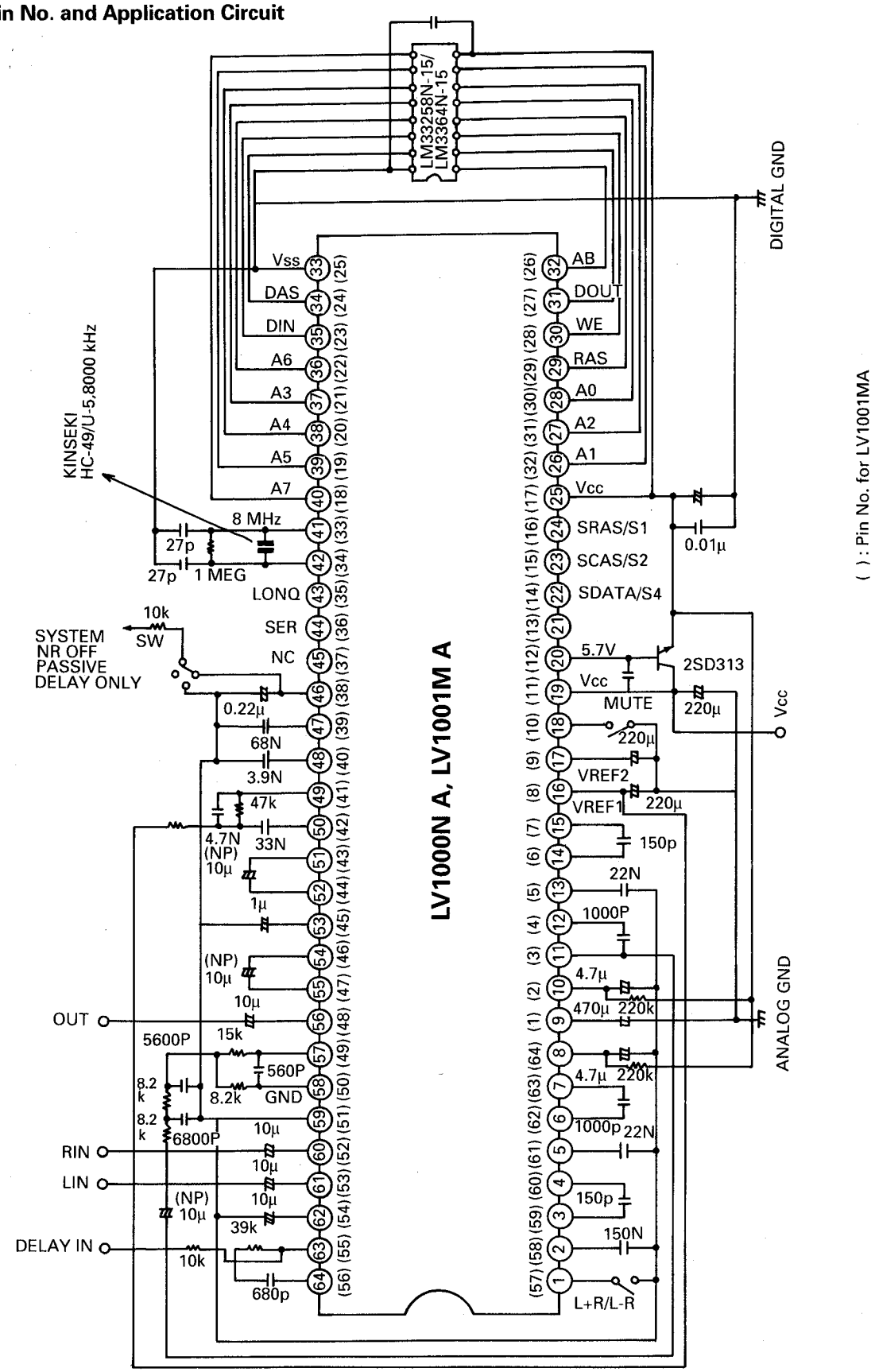

( ) : Pin No. for LV1001MA

2. Block Diagram

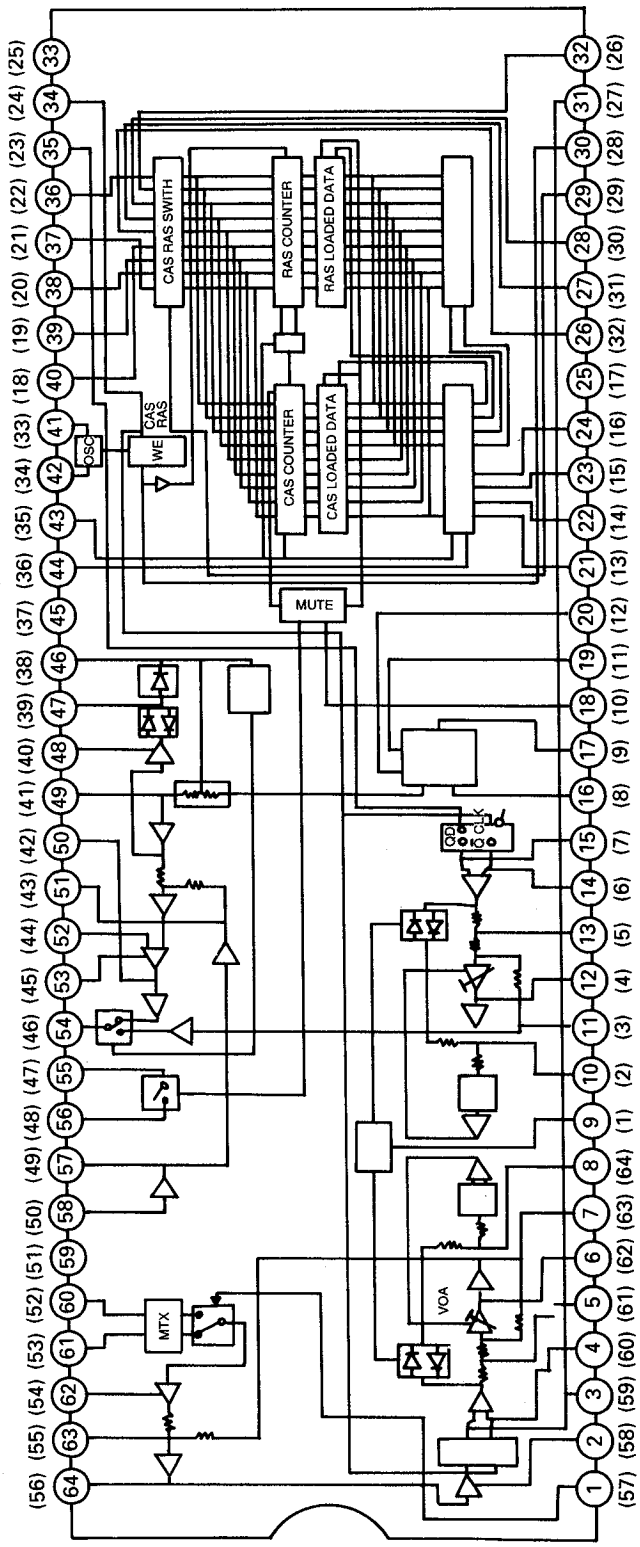

( ) : Pin No. for LV1001MA

3. PIN Functions

Pin No.	Explanations
1(57)	Delay input signal mode select switch (L+R/L-R)
2(58)	Filter for supply voltage on comparator
3,15(7, 59)	Input filter for rectifier
4,14(6, 60)	Input filter for rectifier
5,13(5, 61)	Capacitor for pre-emphasis
6,12(4, 62)	Capacitor for sliding band filter
7(63)	Capacitor for silding band filter and local decoder output
8,10(2, 64)	Capacitor for smoothing of rectifier output
9(1)	De-couple capacitor for threshold voltage
11(3)	Capacitor for sliding band filter and Delayed output
16(8)	Reference voltage
17(9)	Reference voltage
18(10)	Mute control
19(11)	V_{CC}
20(12)	Output for V_{DD}
21(13)	Clock input for serial input, data input for parallel input mode
22(14)	Data input for serial input, data input for parallel input mode
23(15)	Column address selection for serial input, data input for parallel input mode
24(16)	Row address selection for serial input, dat input ofr parallel input mode
25(17)	V_{DD}
26 to 40	Connection to memory device
(18 to 32)	Connection to memory device
33(25)	V_{SS}
41(33)	X'tal resonator for oscillator
42(34)	X'tal resonator for oscillator
43(35)	Long or Short mode selection
44(36)	Serial or Parallel mode selection
45(37)	For test mode
46(38)	Smoothing for NR rectifier
47(39)	Smocthing for NR rectifier
48(40)	Capacitor for weighting on side chain path
49(41)	Input for variable resistor
50(42)	NR output
51(43)	7kHz low pass filter output
52(44)	Input for NR
53(45)	Capacitor for de-couple on NR
54(46)	Delay output or NR output
55(47)	Input for mute circuit
56(48)	Output for mute circuit
57(49)	Output for 7 kHz low pass filter
58(50)	Input for 7 kHz low pass filter
59(51)	GND
60(52)	Input for right channel
61(53)	Input for left channel
62(54)	Capacitor for de-couple on Fixed matrix output
63(55)	Noise shaping and delay input
64(56)	Noise shaping output

BA7625 : IC104 (Video signal switch for AV amplifier)

Internal Diagram

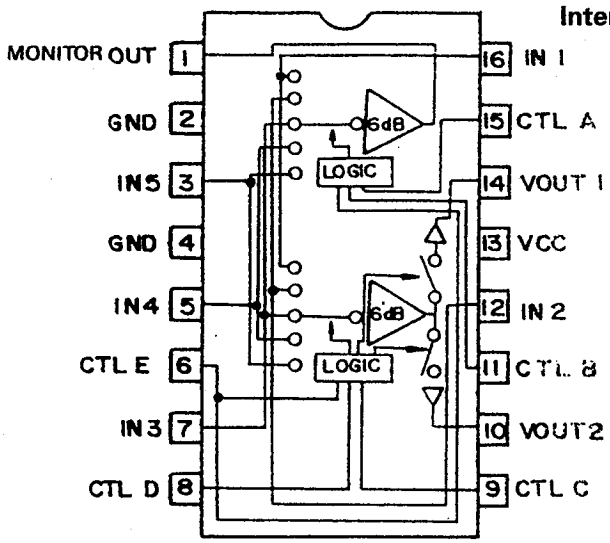

Package Outline

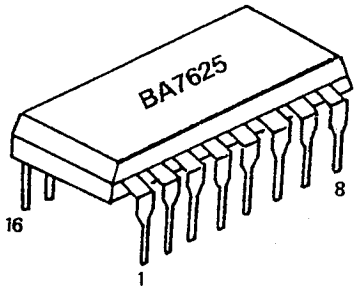

GD 4052B : IC103 (Dual 4 -Channel analog multiplexer/demultiplexer)

LOGIC SYMBOL

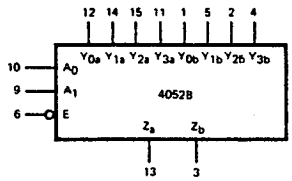

V_{DD} = PIN 16
V_{SS} = PIN 8
V_{EE} = PIN 7

TRUTH TABLE

INPUTS			CHANNELS			
E	A_1	A_0	Y_0-Z	Y_1-Z	Y_2-Z	Y_3-Z
L	L	L	ON	OFF	OFF	OFF
L	L	H	OFF	ON	OFF	OFF
L	H	L	OFF	OFF	ON	OFF
L	H	H	OFF	OFF	OFF	ON
H	X	X	OFF	OFF	OFF	OFF

L=LOW Level H=HIGH Level, X=Don't care

CONNECTION DIAGRAM DIP (TOP VIEW)

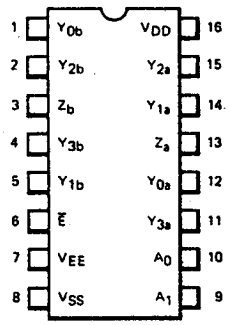

NOTE:
The SO Package has the same pinouts (Connection Diagram) as the Dual In-line Package.

4052B FUNCTIONAL LOGIC DIAGRAM

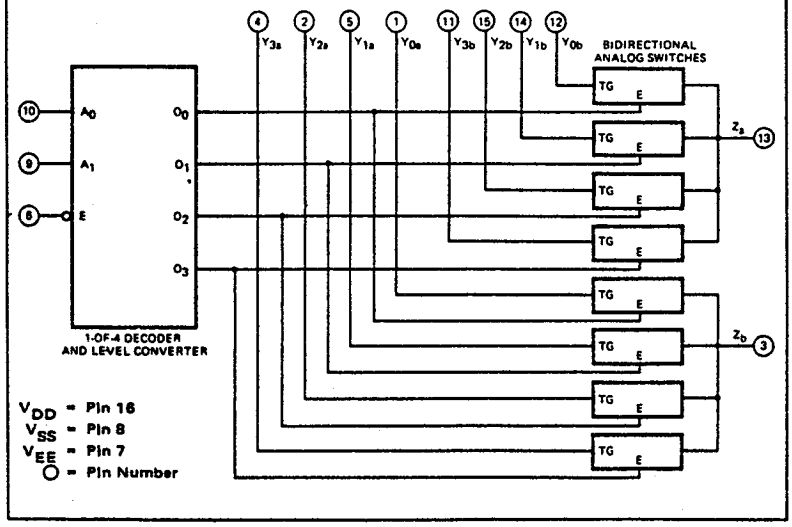

KA2265 : IC903 (AVR25 ONLY)

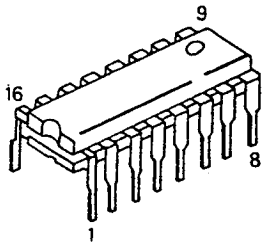

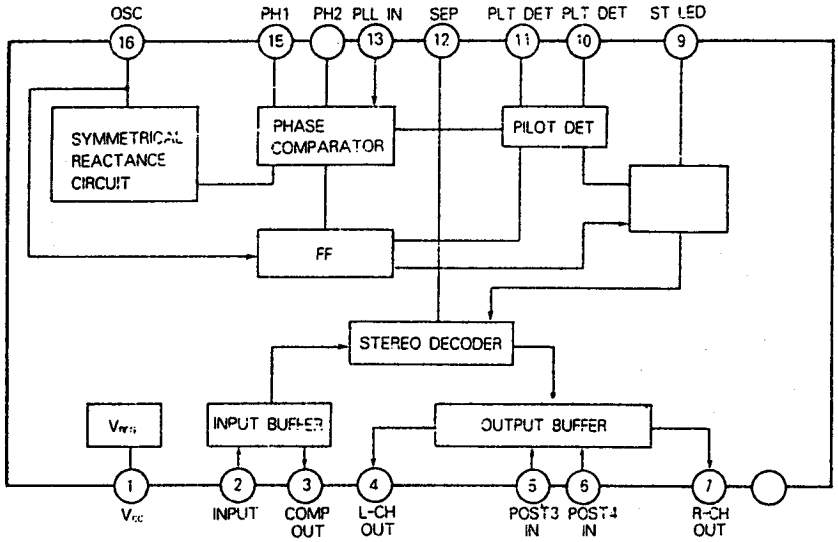

LC7821 : IC101, IC102

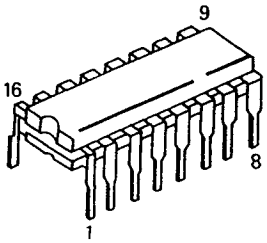

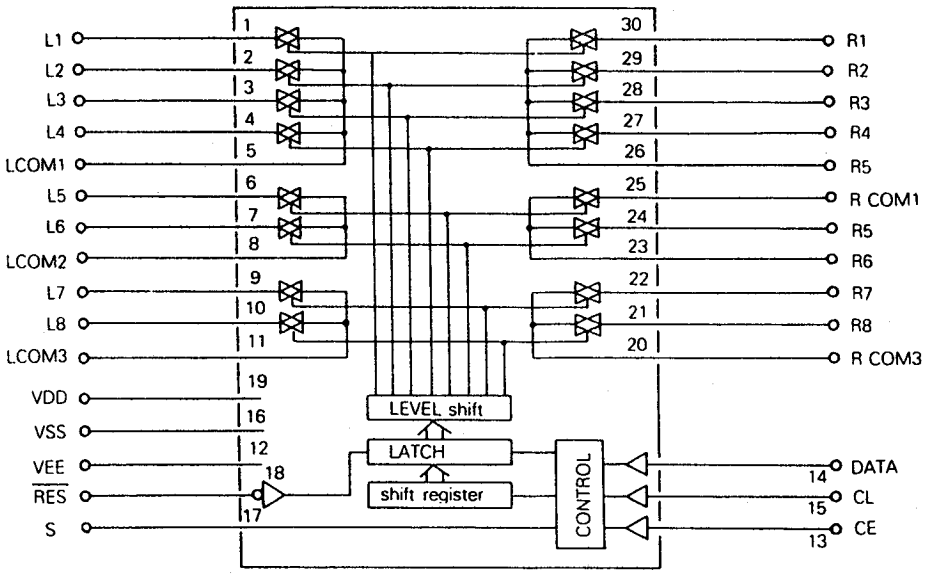

TA7291S : IC109, IC506

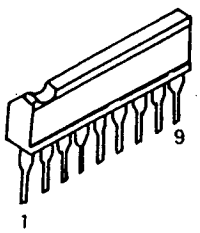

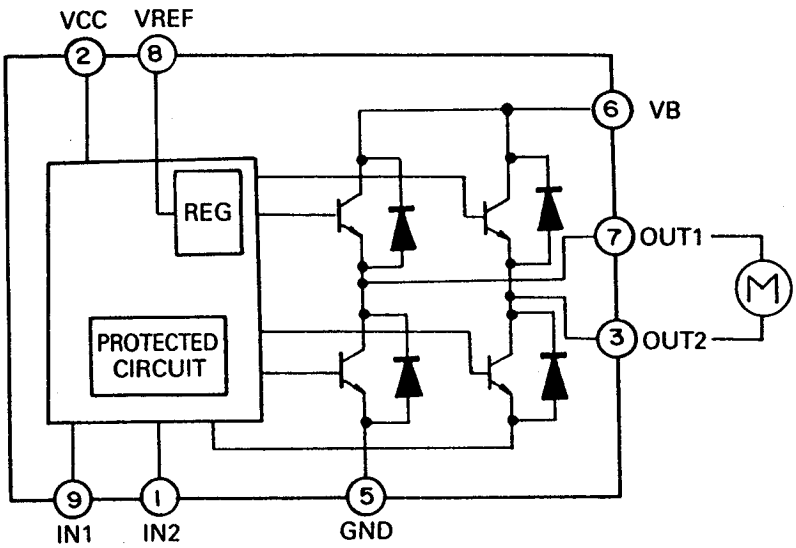

GD79XX : IC243

Front View

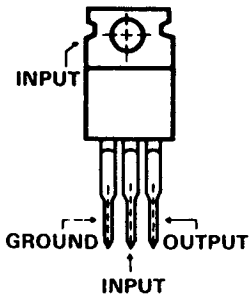

Block Diagram

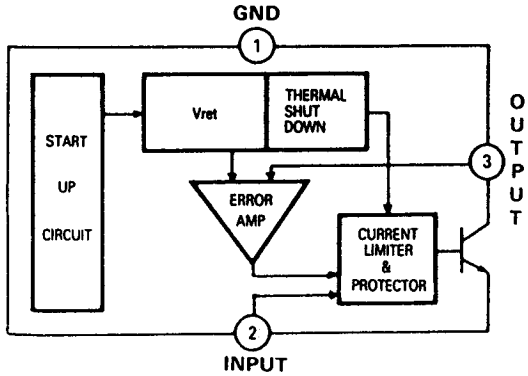

KIA4559P/KIA7559P : IC106, 107, 108, IC401, IC402 IC501, IC502, IC508, IC509

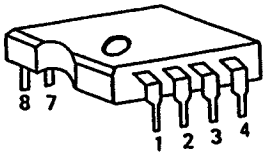

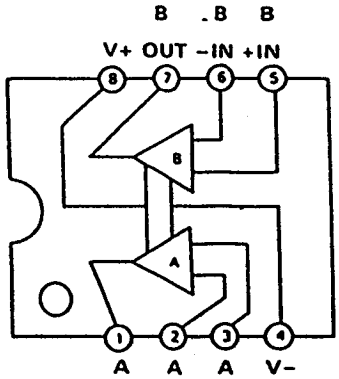

LA1266 : IC902 (AVR25 ONLY)

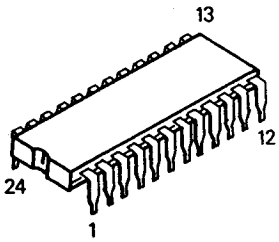

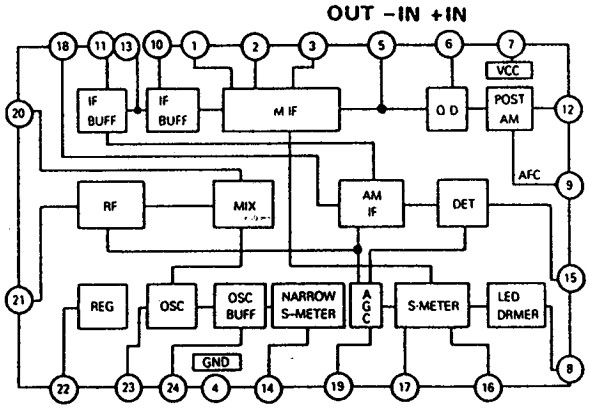

LM7001 : IC901 (AVR25 ONLY)

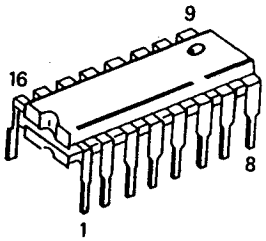

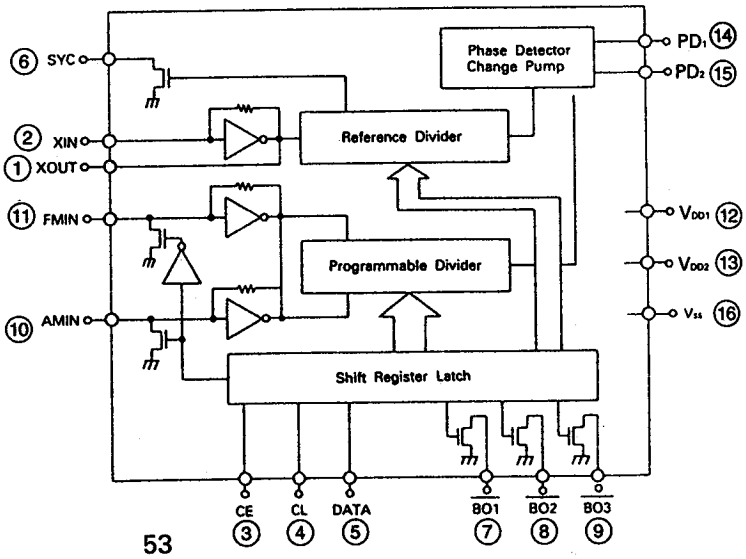

FRONT-END FE407-A15 (USA/CA): FE901

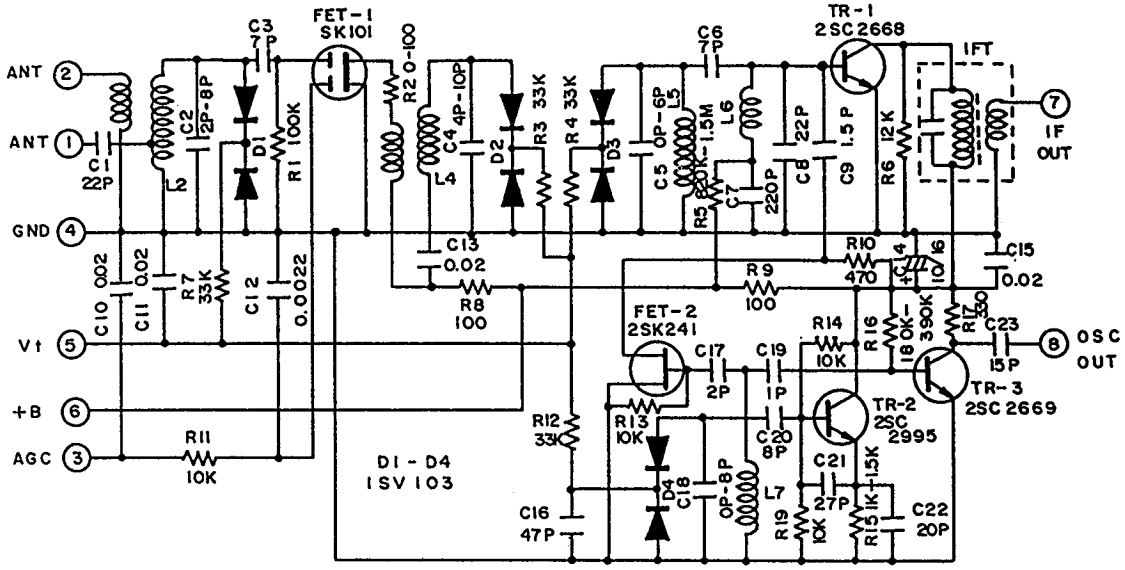

FE407-G60 (Europe) : FE901

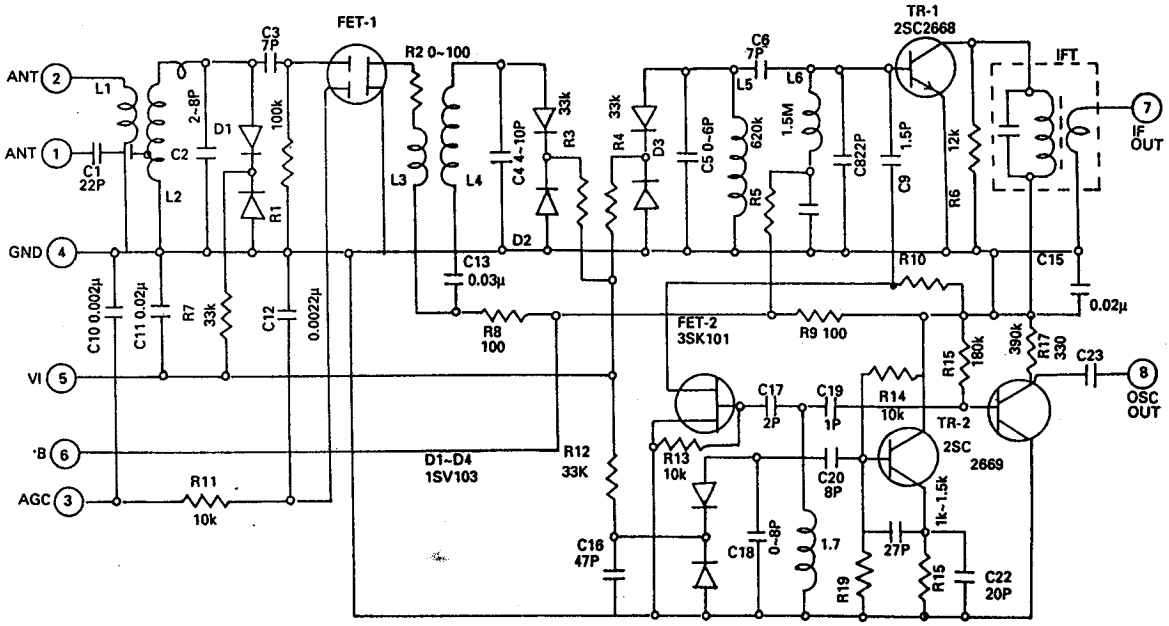

SCHEMATIC DIAGRAM I

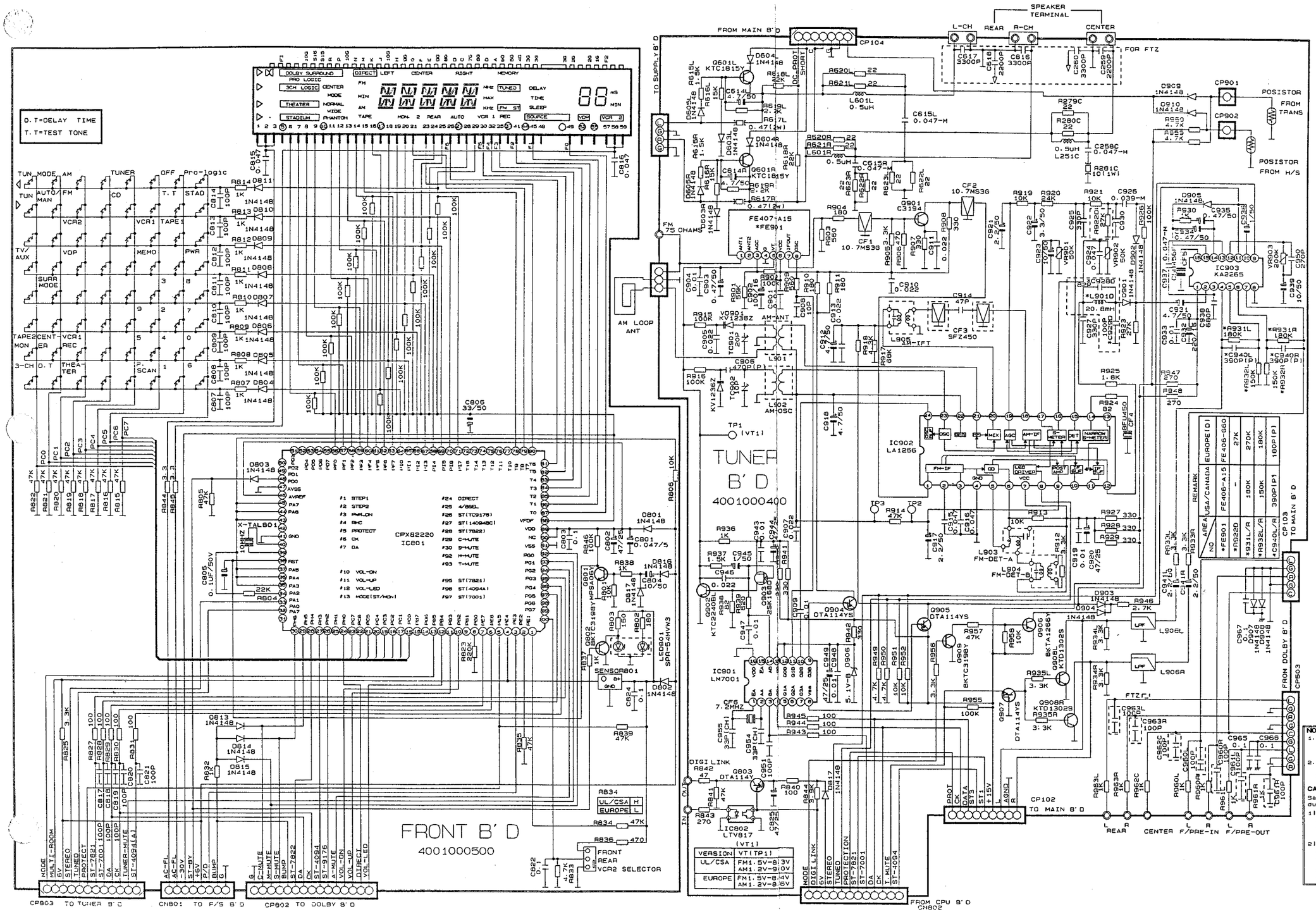

NOTES

1. Resistor values are indicated in ohms unless otherwise specified [K=1,000 M=1,000,000]
2. Capacitor values are indicated in microfarades unless otherwise specified. [p=micro-microfarades]

CAUTION

Safety precaution to be followed during servicing

1 Since those parts marked with ⚠ are critical parts for safety, use only the one described in the parts list

2 Before returning the set to the customer make appropriate leakage current or resistance measurements to determine the exposed parts are properly insulated from the supply circuit.

SCHEMATIC DIAGRAM I

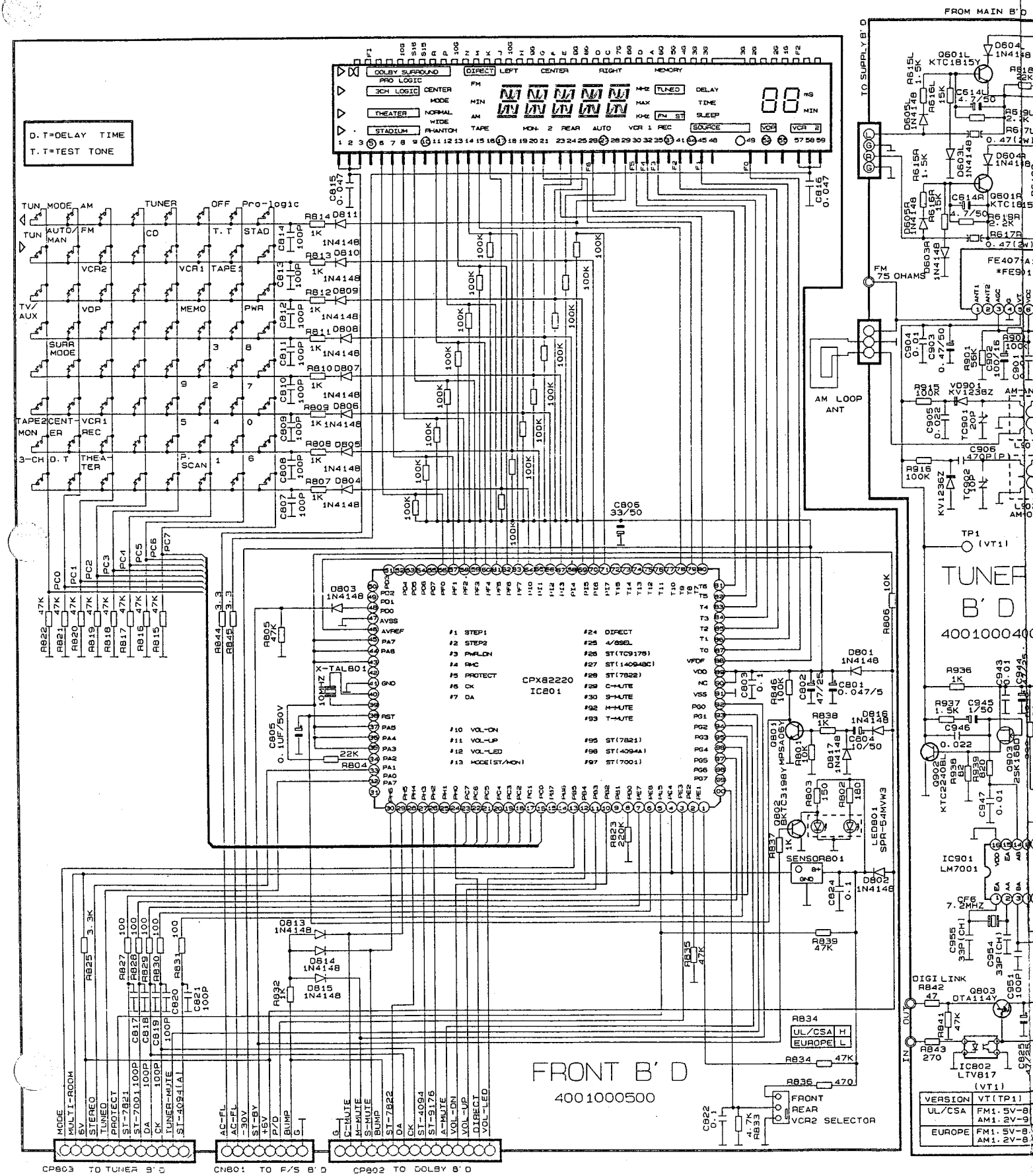

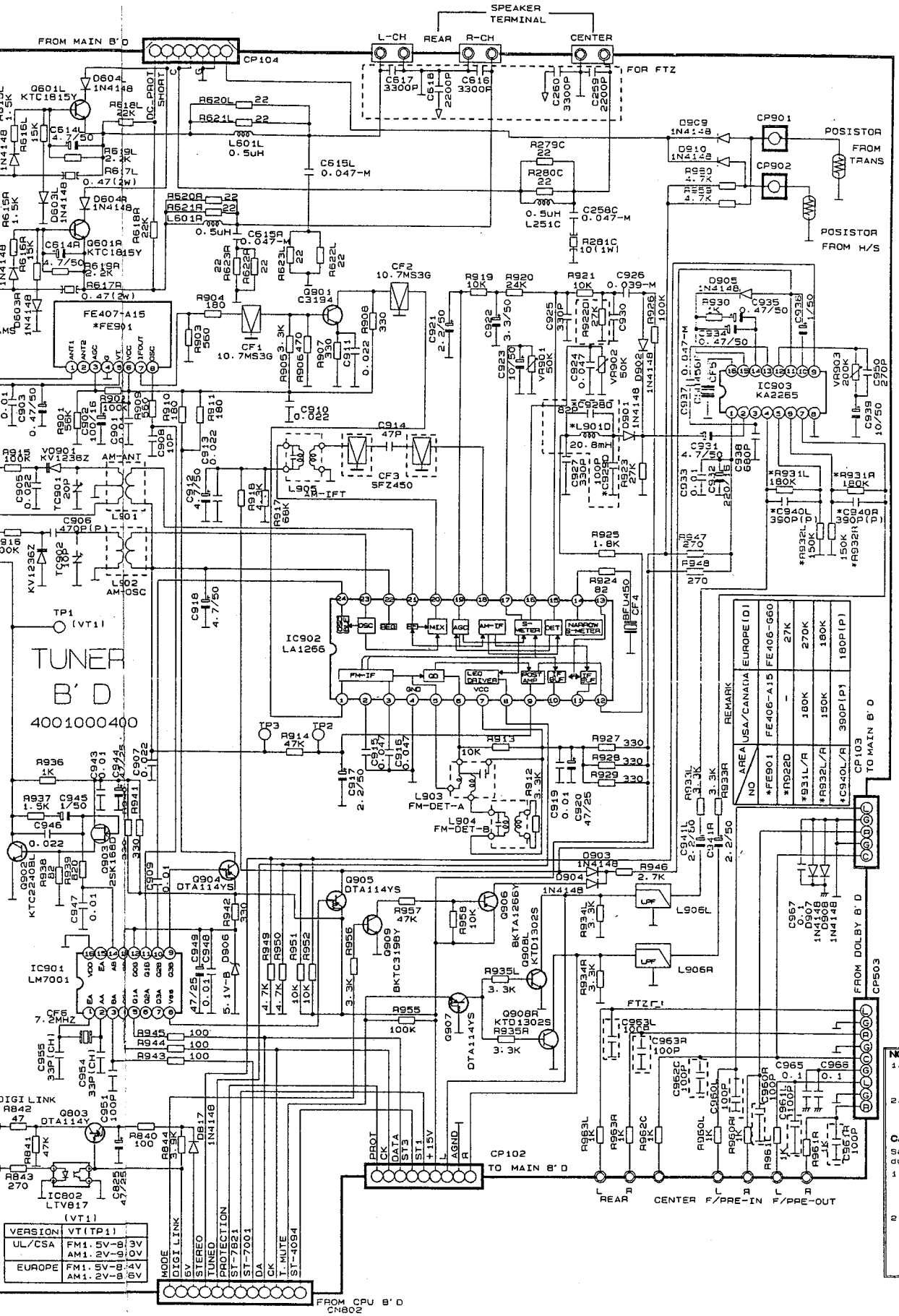

NOTES

1. Resistor values are indicated in ohms unless otherwise specified (K=1,000 M=1,000,000)
2. Capacitor values are indicated in microfarades unless otherwise specified. (p=micro-microfarades)

CAUTION

Safety precaution to be followed during servicing

1) Since those parts marked with ⚠ are critical parts for safety, use only the one described in the parts list

2) Before returning the set to the customer make appropriate leakage current or resistance measurements to determine the exposed parts are properly insulated from the supply circuit.

SCHEMATIC DIAGRAM II

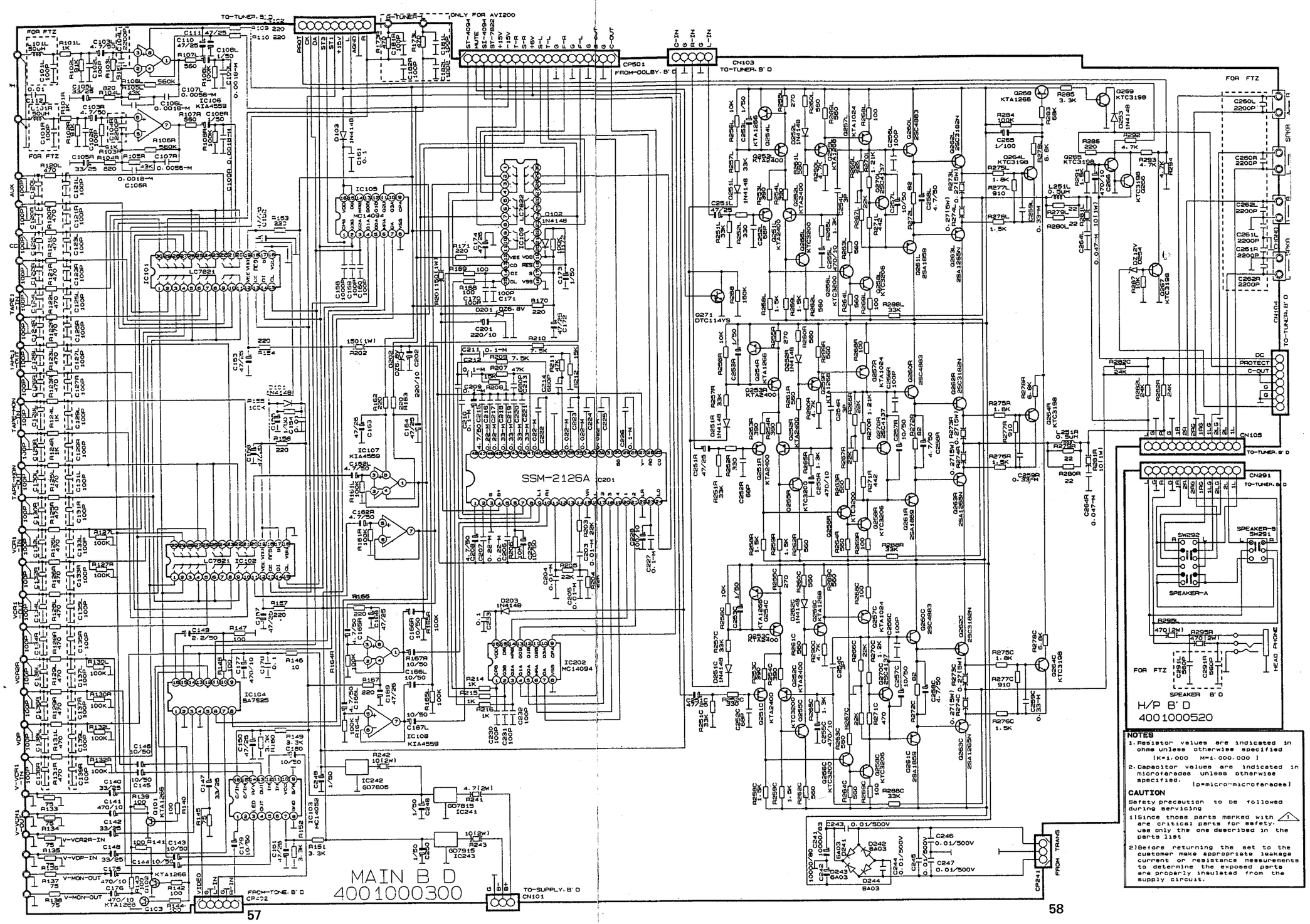

SCHEMATIC DIAGRAM II

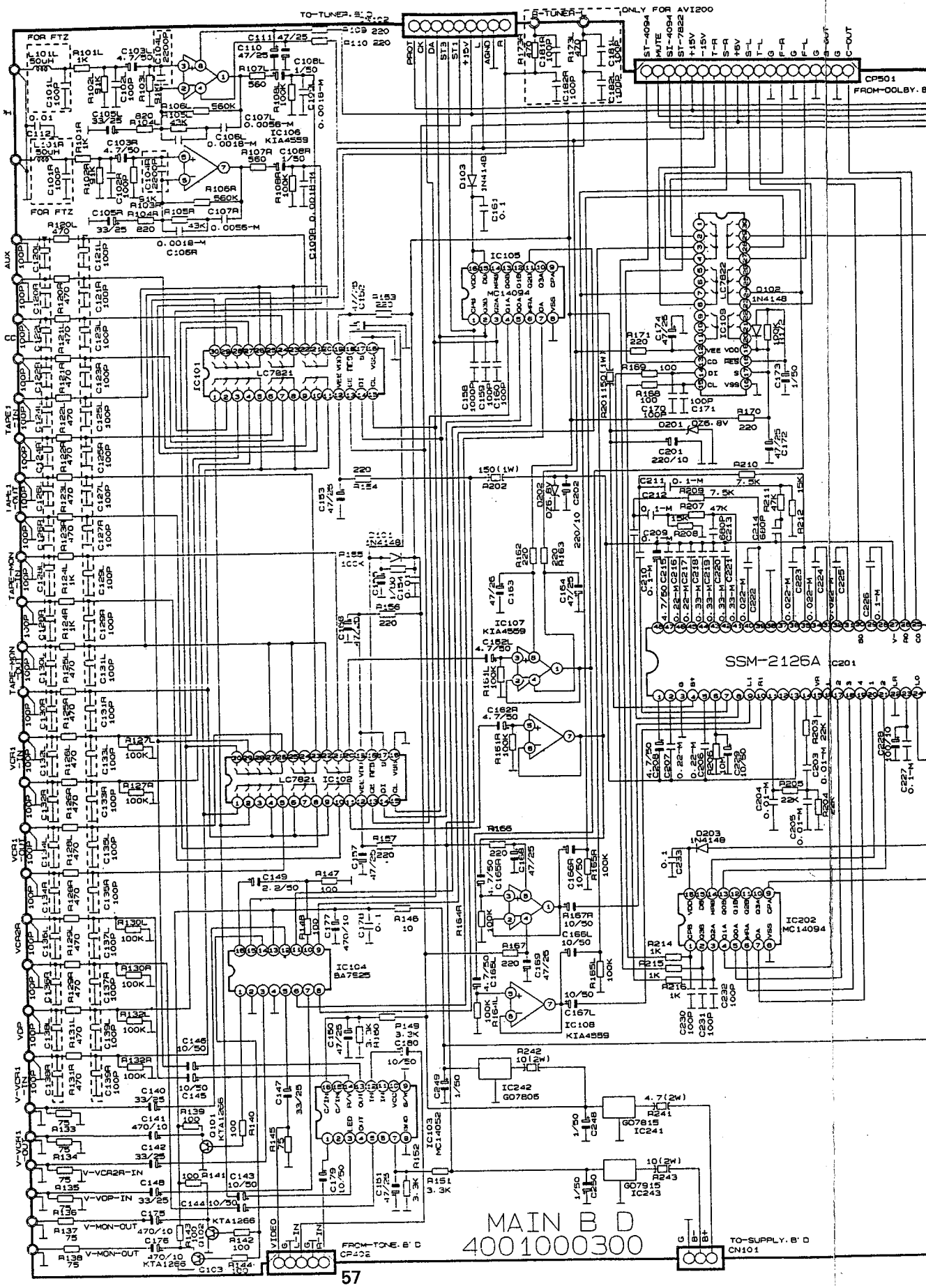

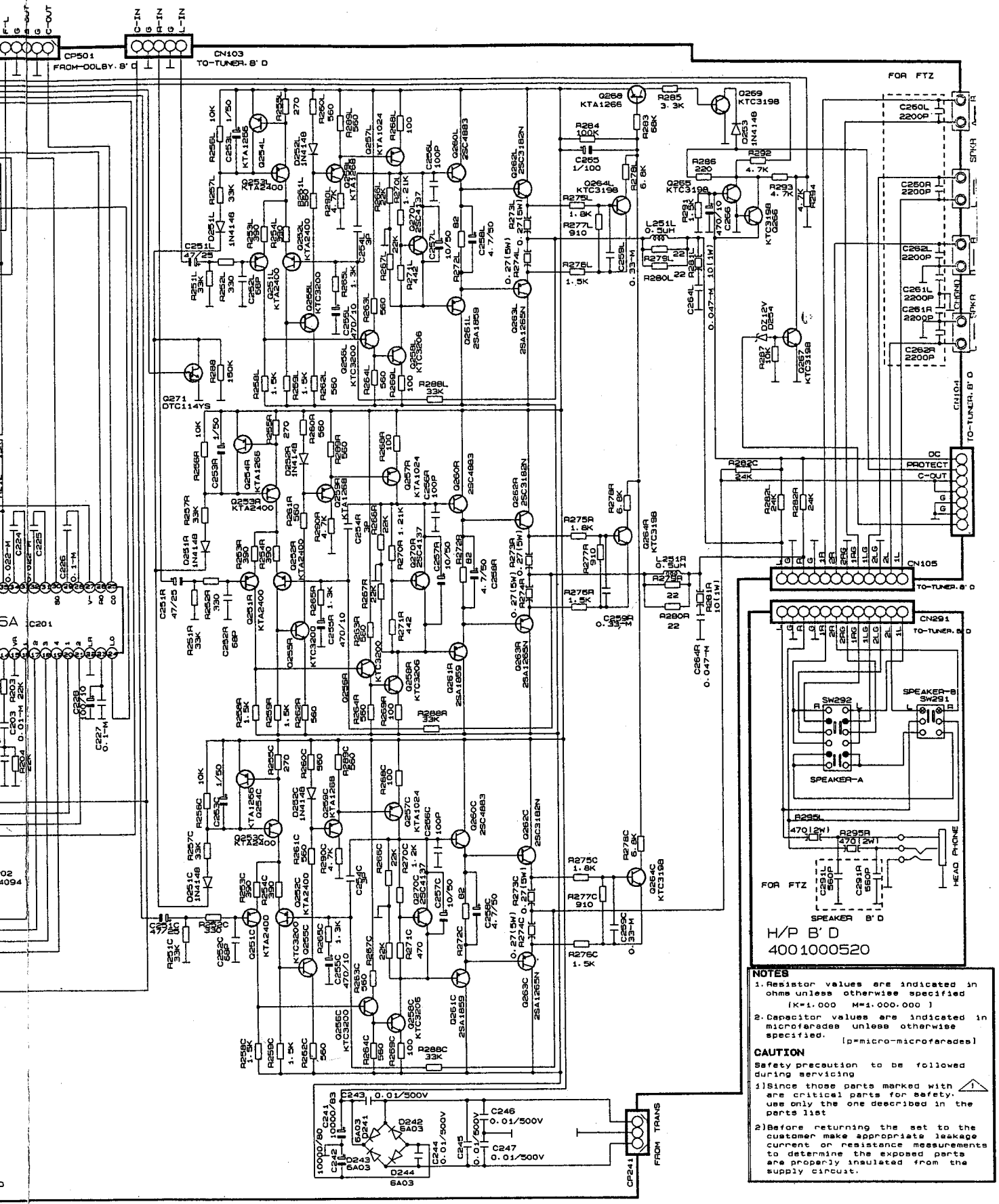

NOTES

1. Resistor values are indicated in ohms unless otherwise specified
   [K=1,000 M=1,000,000]
2. Capacitor values are indicated in microfarades unless otherwise specified.
   [p=micro-microfarades]

CAUTION

Safety precaution to be followed during servicing

1) Since those parts marked with ⚠ are critical parts for safety, use only the one described in the parts list

2) Before returning the set to the customer make appropriate leakage current or resistance measurements to determine the exposed parts are properly insulated from the supply circuit.

SCHEMATIC DIAGRAM III

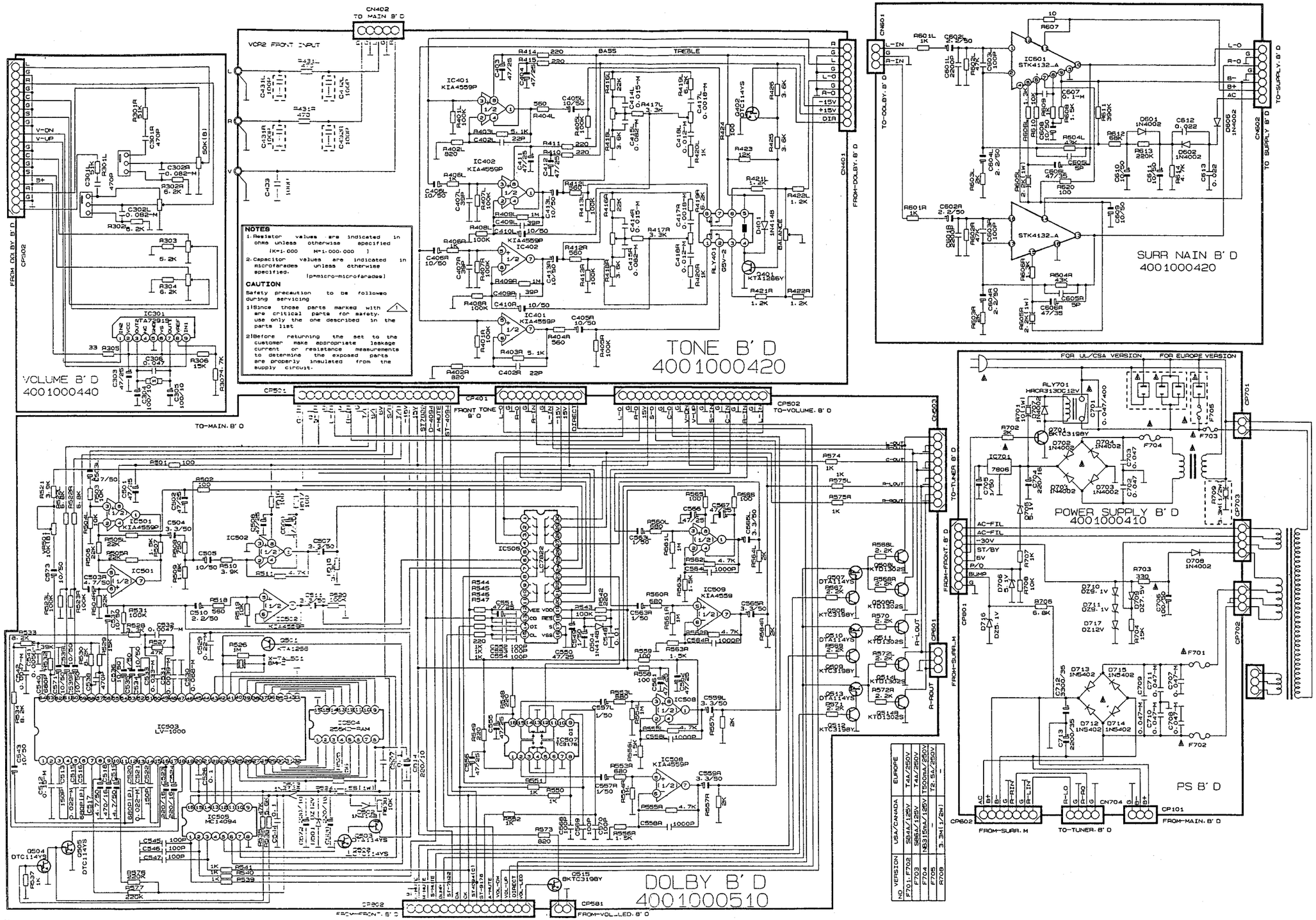

SCHEMATIC DIAGRAM III

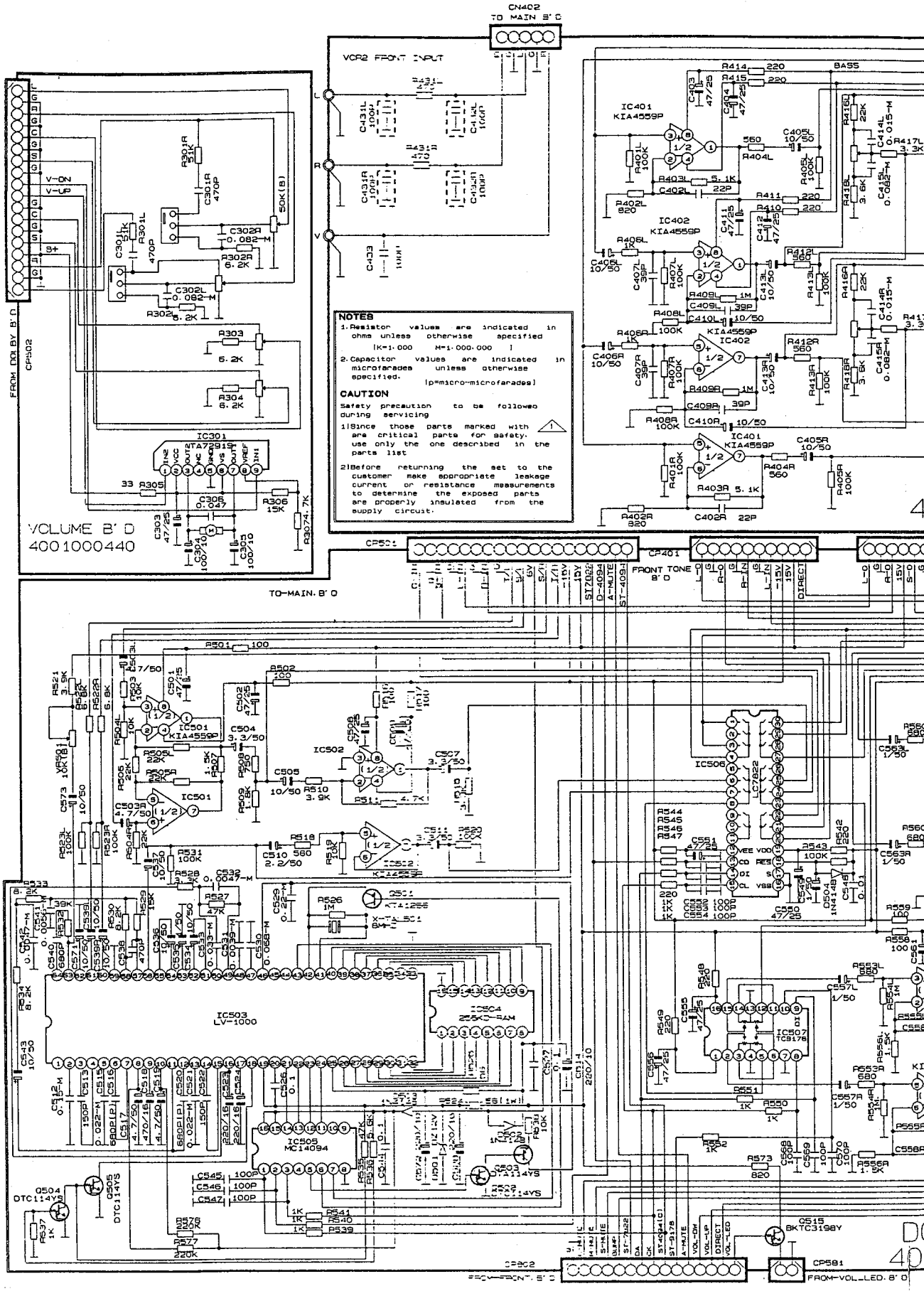

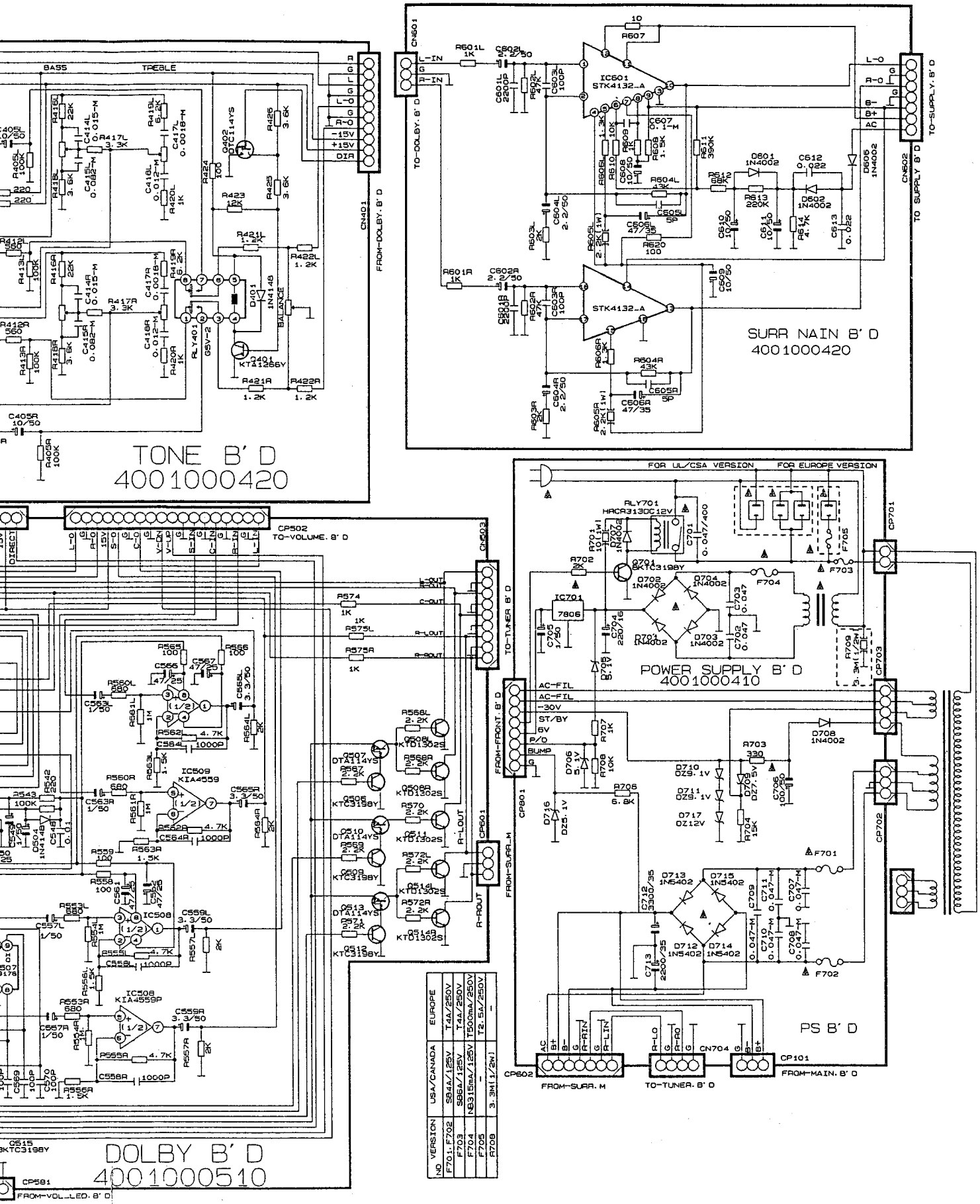
TONE B' D
4001000420
SURR NAIN B' D
4001000420
DOLBY B' D
4001000510
POWER SUPPLY B' D
4001000410
PS B' D
FOR UL/CSA VERSION
FOR EUROPE VERSION
TO-VOLUME. B' D
TO-TUNER B' D
FROM-SUAR_M
FROM-MAIN. B' D
FROM-VOL_LED. B' D
FROM-DOLBY. B' D
TO-DOLBY. B' D
TO-SUPPLY. B' D
TO SUPPLY B' D
FROM-FRONT. B' D
BASS
TREBLE
BALANCE
IC501 STK4132_A
IC509 KIA4559
IC508 KIA4559P
RLY701 HRCR3130C12V
IC701 7806
VERSION NO
USA/CANADA
EUROPE
F701, F702
S8A/125V
T4A/250V
F703
S8A/125V
T4A/250V
F704
N8315mA/125V
T500mA/250V
F705
-
T2.5A/250V
R708
3.3M(1/2W)
-

TRANSISTORS LEAD IDENTIFICATION

TRANSISTOR	FRONT VIEW	BOTTOM VIEW
TDA 1302 KTC3200/KTC2240 KTC3198/KTC1815 KTC1923/KTC3194 KTA2400 KTA1268/KTA970 KTA1266/KTA1015	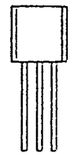	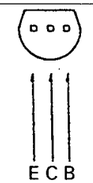
DTC114YS DTA114YS	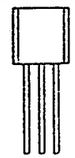	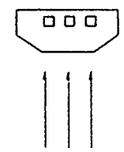
MPSA06	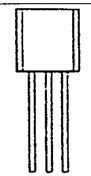	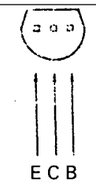
KTA1024 KTC3206	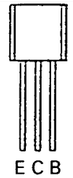	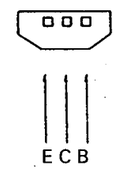
2SC4137	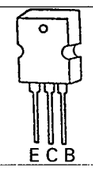	
2SK168A	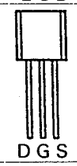	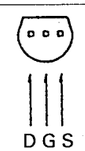
2SA1265N-O 2SA1859A-Y 2SC4883A-Y 2SC3182N-O	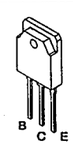	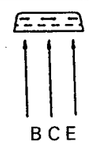

TERMINAL NAME

B→BASE
C→COLLECTOR
E→EMITTER

11K4

9017036970
Printed in Korea

TRANSISTORS LEAD IDENTIFICATION

TRANSISTOR	FRONT VIEW	BOTTOM VIEW
TDA 1302 KTC3200/KTC2240 KTC3198/KTC1815 KTC1923/KTC3194 KTA2400 KTA1268/KTA970 KTA1266/KTA1015	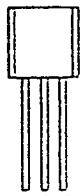	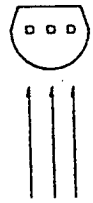
DTC114YS DTA114YS		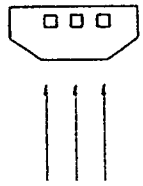
MPSA06	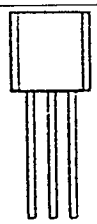	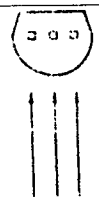
KTA1024 KTC3206	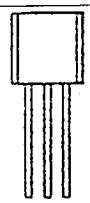	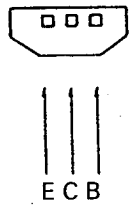
2SC4137	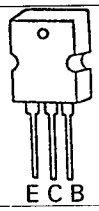	
2SK168A	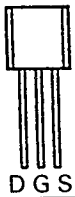	
2SA1265N-O 2SA1859A-Y 2SC4883A-Y 2SC3182N-O	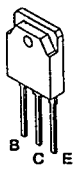	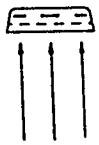

TERMINAL NAME
B→BASE C→COLLECTOR E→EMITTER