The Harman Kardon
Model DC5700

Manual 179A

DUAL CASSETTE DECK

DC5700

Technical Manual

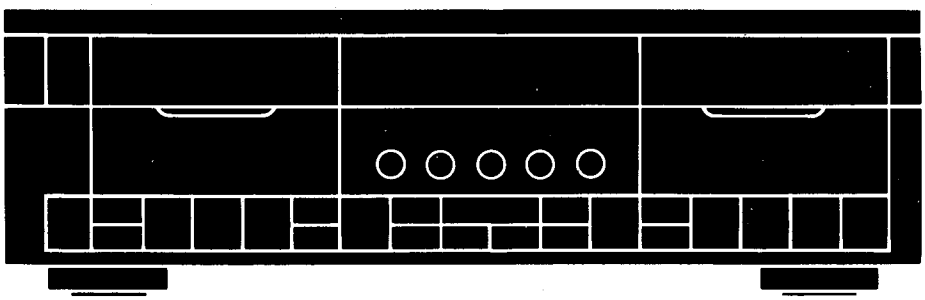

The following marks found in the parts list of this manual identify the models as follows.

BK : North America area model Black version

IB : International model Black version

CONTENTS

SPECIFICATIONS 2
LEAKAGE TEST 2
CONTROLS AND FUNCTIONS 3
DISASSEMBLY PROCEDURES 4
POWER CORD REPLACEMENT 4
CIRCUIT DESCRIPTION 4
TIMING CHART 5
ALIGNMENT PROCEDURES 6
LEAD WIRES STYLING DIAGRAM 9
BLOCK DIAGRAM 9
GENERAL UNIT 10
GENERAL UNIT PARTS LIST 11
CASSETTE TAPE RECORDER MECHANISM, PARTS LIST 11
WIRING DIAGRAM 12
P. C. BOARD 13
ELECTRICAL PARTS LIST 15
IC BLOCK DIAGRAM 24
SCHEMATIC DIAGRAM 27

harman/kardon

Parts and Service Office
240 Crossways Park West,Woodbury,N.Y. 11797
1112-0030A152 P-129109 2000 Printed in Japan

SPECIFICATIONS

		Nominal	Limit
Track Configuration		4-track 2 Channel Stereo Cassette Deck	
• MECHANICAL SECTION			
Record/Playback Tape Speed Drift 4.75 cm/sec.		0.2% ≦ 2.0%	
Heads (Primary/Secondary)		2/2	
Wow and Flutter	NAB	0.05% ≦ 0.1%	
	CCIR	0.08%	
Take Up Torque		50 gr.cm	35 – 70 gr.cm
Back Tension		2 gr.cm	2 – 6 gr.cm
F. FWD Torque		100 gr.cm	70 – 150 gr.cm
Rew. Torque		100 gr.cm	70 – 150 gr.cm
F. FWD/Rew Time (C-60 Tape)		85 sec.	≦ 100 sec.
• AMPLIFIER SECTION			
Record/Playback Frequency Response (at -3 dB)	LN	20 – 18 kHz	20 – 17 kHz
	CrO_2	20 – 18 kHz	20 – 17 kHz
	Metal	20 – 18 kHz	20 – 17 kHz
Copy Mode Frequency Response	LN	40 – 16 kHz	40 – 15 kHz
	CrO_2	40 – 16 kHz	40 – 15 kHz
	Metal	40 – 16 kHz	40 – 15 kHz
Bias Frequency		105 kHz ±5 kHz	
Playback Output		700 mV ±1.5 dB	
Signal-to-Noise Ratio (at Line Input) (Input 1 kHz, 100 mV) IHF-A WTD (at Dolby level)			
Dolby NR off	LN	51 dB	
	CrO_2	54 dB	
	Metal	54 dB	
Dobly B NR	LN	61 dB	
	CrO_2	64 dB	≧ 60 dB
	Metal	64 dB	≧ 60 dB

		Nominal	Limit
Dolby C NR	LN	66 dB	
	CrO_2	70 dB	≧ 66 dB
	Metal	70 dB	≧ 66 dB
Channel Separation		45 dB	≧ 35 dB
Crosstalk		70 dB	≧ 60 dB
Record/Playback Distortion (Input 1 kHz)			
	LN	0.7%	≦ 2.0%
	CrO_2	0.8%	≦ 3.0%
	Metal	0.9%	≦ 2.0%
MPX Filter Attenuation			
	at 15 kHz	0.3 dB	≦ 1 dB
	at 19 kHz	35 dB	≧ 30 dB
Erase Ratio (Input 80 Hz)			
	LN	70 dB	≧ 60 dB
	Metal	60 dB	≧ 56 dB
Input Sensitivity (Input 1 kHz) at Line Input		43 mV	30 – 80 mV
Input Impedance (Input 1 kHz) at Line Input		23 kΩ	15 – 25 kΩ
• DIMENSIONS (WxHxD)		17-3/8" x 5" x 12-5/8" (443 x 134 x 342) mm	
• WEIGHT		17.2 lbs (7.8 kg)	
• POWER SUPPLY			
U.S.A and Canada models		AC120V, 60 Hz	
International model		AC230V/240V, 50/60 Hz	
• POWER CONSUMPTION			
U.S.A. and Canada models		29 W	
International model		31 W	

These specifications are service target specs.
Specifications and components are subject to change without notice.
Overall performance will be maintained or improved.

LEAKAGE TEST (FOR SERVICE ENGINEERS IN THE U.S.A)

Before returning the unit to the user, perform the following safety checks:

1. Inspect all lead dress to make certain that leads are not pinched or that hardware is not lodged between the chassis and other metal parts in the unit.
2. Replace all protective devices such as nonmetallic control knobs, insulating fishpapers, cabinet backs, or shields, isolation resistorcapacitor networks, mechanical insulators, etc.
3. Be sure that no shock hazard exists; check for leakage current using Simpson Model 229 Leakage Tester, standard equipment item No. 21641, RCA Model WT540A or use alternate method as follows:

Plug the AC line cord directly into a 120-volt AC receptacle (do not use an Isolation Transformer for this test). Using two clip leads, connect a 1500 ohm, 10-watt resistor paralleled by a 0.15mF capacitor, in series with all exposed metal cabinet parts and a known earth ground, such as a water pipe or conduit. Use a VTVM or VOM with 1000 ohms per volt, or higher sensitivity to measure the AC voltage drop across the resistor.(See Diagram.) Move the reisistor connection to each exposed metal part having a return path to the chassis (antenna, metal, cabinet, screw heads, knobs and control shafts, escutcheon, etc.) and measure the AC voltage drop across the resistor. (This test should be performed with the power switch in both the On and Off positions.)

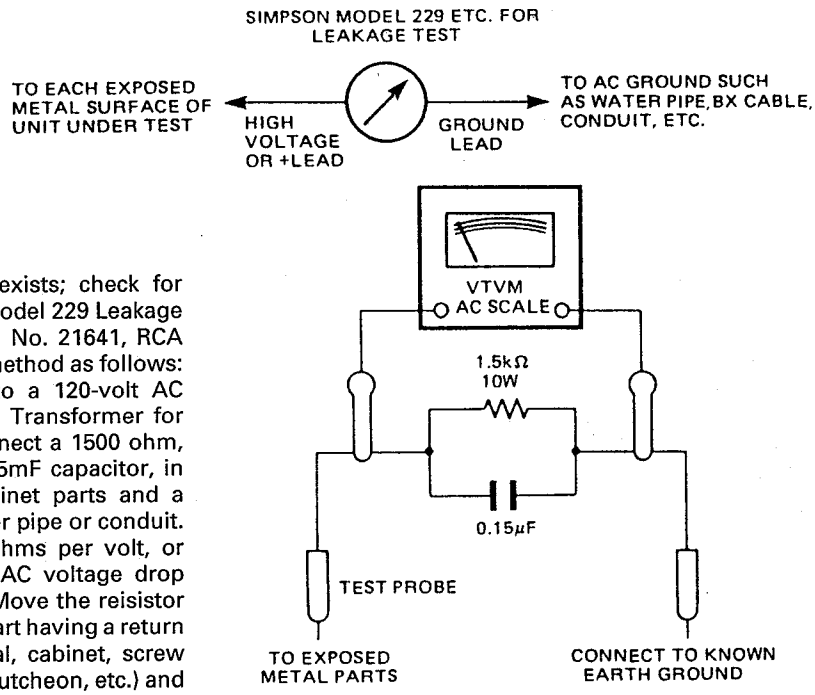

A reading of 0.35 volt RMS or more is excessive and indicates a potential shock hazard which must be corrected before returning the unit to the owner.

CONTROLS AND FUNCTIONS

Direction Mode
Selects one way, reverse, or continuous transport mode.

Input Balance
Adjusts recording balance of left and right channels.

Input Level
Adjusts recording level.

Primary Bias
Adjust when recording.

Music Search
Preset Music Search for a maximum of 15 tracks.

Power Switch
Press to turn unit on/off.

PRI/SEC Transport Selector
Selects which transport (either Primary or Secondary) is to be operated by the transport controls.

Intro Scan
Previews each segment on a pre-recorded tape.

Secondary Bias
Adjust when recording.

Copy
Press to begin automatic copying procedure.

Hi-Speed Copy
Press to begin automatic high speed copying procedure.

Stop
Stops tape movement.

Reverse Play
Begins playback or recording in reverse direction.

Sync Reverse
Activates automatic synchronized reverse copying in Copy and Hi-Speed Copy modes.

Rewind
Rapidly rewinds tape.

Dual Record
Press to activate Dual Record.

Eject
Press to load/remove tape cassette in Primary transport.

Auto Pause
Press to activate Auto Pause when in Edit Mode.

Rec/Pause
Puts cassette deck in Record-ready or Pause mode.

Play
Begins playback or recording.

Fast Forward
Rapidly advances tape.

Rec Mute
Inserts blank space when recording.

*** Dolby NR**
Selects Dolby on/off, Dolby B mode, or Dolby C mode.

MPX Filter
Press when using Dolby noise reduction while recording FM stereo broadcasts.

Memory
Press on: when ◀◀ is pressed, tape rewinds to approximately 00:00 on Counter.

Reset
Resets Counter to 00:00.

Eject
Press to load/remove tape cassette in Secondary transport.

Edit
Press to begin Edit mode.

PRI
Illuminates when Primary tape transport is currently operated by the transport controls.

SEC
Illuminates when Secondary tape transport is currently operated by the transport controls.

◀◀ ▶▶ ❚❚ ■
Displays operating mode of transport: Record, Forward Play, Reverse Play, Fast Forward, Rewind, Pause, Stop.

MPX
Indicates MPX Filter is engaged.

LEVEL
Shows signal level.

◀◀ ▶▶ ❚❚ ■
Displays operating mode of transport: Record, Forward Play, Reverse Play, Fast Forward, Rewind, Pause, Stop.

RECORD
Illuminates when transport is in Record mode.

RECORD
Illuminates when transport is in Record mode.

B C
Illuminates if Dolby B or C circuits are on.

B C
Illuminates if Dolby B or C circuits are on.

MEMORY
Indicates Memory is engaged.

MEMORY
Indicates Memory is engaged.

INTRO
Indicates Intro Scan is engaged.

TRANSPORT MODE
Indicates transport mode: one way, auto reverse, continuous.

COPY
Indicates unit is in Copy mode.

SEARCH
Indicates Music Seach and Blank Skip functions are engaged.

00:00
Indicates tape position in minutes and seconds.

EDIT
Indicates unit is in Edit mode.

HI SPD
Indicates unit is in High Speed Copy mode.

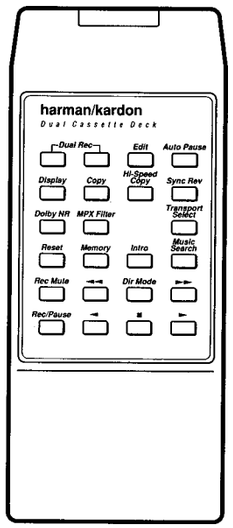

The control unit includes buttons that function the same way as the corresponding keys on the cassette deck.

*** NOTE**
Dolby noise reduction and HX Pro headroom extension manufactured under license from Dolby Laboratories Licensing Corporation. HX Pro originated by Bang & Olufsen. "DOLBY" and the double-D symbol DD and "HX PRO" are trademarks of Dolby Laboratories Licensing Corporation.

CONTROLS AND FUNCTIONS

Direction Mode
Selects one way, reverse, or continuous transport mode.

Input Level
Adjusts recording level.

Power Switch
Press to turn unit on/off.

PRI/SEC Transport Selector
Selects which transport (either Primary or Secondary) is to be operated by the transport controls.

Intro Scan
Previews each segment on a pre-recorded tape.

Stop
Stops tape movement.

Reverse Play
Begins playback or recording in reverse direction.

Rewind
Rapidly rewinds tape.

Eject
Press to load/remove tape cassette in Primary transport.

Rec/Pause
Puts cassette deck in Record-ready or Pause mode.

Play
Begins playback or recording.

Fast Forward
Rapidly advances tape.

Rec Mute
Inserts blank space when recording.

***Dolby NR**
Selects Dolby on/off, Dolby B mode, or Dolby C mode.

MPX Filter
Press when using Dolby noise reduction while recording FM stereo broadcasts.

Memo
Press
tape re
00:00

PRI
Illuminates when Primary tape transport is currently operated by the transport controls.

SEC
Illuminates when Se
currently operated b

MPX
Indicates MPX Filter is engaged.

LEVEL
Shows signal level.

◀◀ ▶▶ ❚❚ ■
Displays operating mode of transport: Record, Forward Play, Reverse Play, Fast Forward, Rewind, Pause, Stop.

RECORD
Illuminates when transport is in Record mode.

DD B C
Illuminates if Dolby B or C circuits are on.

MEMORY
Indicates Memory is engaged.

INTRO
Indicates Intro Scan is engaged.

SEARCH
Indicates Music Seach and Blank Skip functions are engaged.

00:00
Indicates tape position in minutes and seconds.

TRANSPORT MODE
Indicates transport mode: one way, auto reverse, continuous.

HI SPD
Indicates unit is in High Speed Copy mode.

EDIT
Indicates unit is in Edit mode.

COPY
Indicates unit is in Copy mode.

RE
Illu
in R

DD
Illu
C c

ME
Ind
eng

Input Balance
Adjusts recording balance of left and right channels.

Primary Bias
Adjust when recording.

Music Search
Preset Music Search for a maximum of 15 tracks.

Secondary Bias
Adjust when recording.

Copy
Press to begin automatic copying procedure.

Hi-Speed Copy
Press to begin automatic high speed copying procedure.

Sync Reverse
Activates automatic synchronized reverse copying in Copy and Hi-Speed Copy modes.

Dual Record
Press to activate Dual Record.

Auto Pause
Press to activate Auto Pause when in Edit Mode.

Edit
Press to begin Edit mode.

Memory
Press on: when ◀◀ is pressed, tape rewinds to approximately 00:00 on Counter.

Eject
Press to load/remove tape cassette in Secondary transport.

Reset
Resets Counter to 00:00.

inates when Secondary tape transport is
ntly operated by the transport controls.

◀◀ ▶▶ ❚❚ ■
Displays operating mode of transport: Record, Forward Play, Reverse Play, Fast Forward, Rewind, Pause, Stop.

RECORD
Illuminates when transport is in Record mode.

DD B C
Illuminates if Dolby B or C circuits are on.

MEMORY
Indicates Memory is engaged.

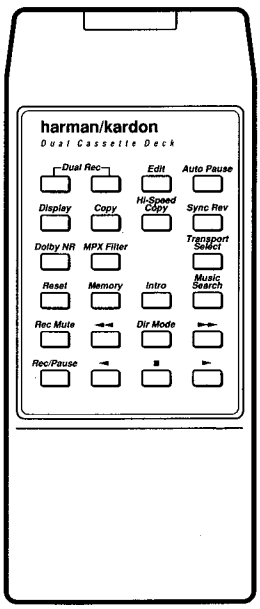

The control unit includes buttons that function the same way as the corresponding keys on the cassette deck.

*** NOTE**
Dolby noise reduction and HX Pro headroom extension manufactured under license from Dolby Laboratories Licensing Corporation. HX Pro originated by Bang & Olufsen. "DOLBY" and the double-D symbol DD and "HX PRO" are trademarks of Dolby Laboratories Licensing Corporation.

DISASSEMBLY PROCEDURES (REFER TO PAGES 10, 11 and 12)

1 TOP COVER (133) REMOVAL

Remove 4 screws (A) and 2 screws (B), and then remove the Top Cover(133).

2 FRONT PANEL ASSEMBLY (AA) REMOVAL

1. Remove the Top Cover (133).
2. Disconnect 1 connector (JL901) from 1 connector (CN904) on the Main P. C. Board (PCB-1).
3. Remove 6 screws (C) and 3 screws (D), and then remove the Front Panel Assembly (AA).
4. If necessary, unsolder the lead wires.

3 PRIMARY CASSETTE TAPE RECORDER MECHANISM ASSEMBLY (103) REMOVEL

1. Remove the Front Panel Assembly (AA). (Refer to Step 2.)
2. Disconnect 4 connectors (LCN101/351, LCN801, LCN802 and LCN803) on the Primary Transport P. C. Board (103).
3. Remove 4 screws (E), and then the Cassette Tape Recorder Mechanism Assembly (103).

4 SECONDARY CASSETTE TAPE RECORDER MECHANISM ASSEMBLY (103) REMOVAL

1. Remove the Front Panel Assembly (AA). (Refer to Step 2).
2. Disconnect 4 connectors (LCN304/1101, LCN804, LCN805 and LCN806) on the Secondary Transport P. C. Board (103).
3. Remove 4 screws (F), and then the Cassette Tape Recorder Mechanism Assembly (103).

5 MAIN P. C. BOARD (PCB-1) REMOVAL

1. Remove the Front Panel Assembly (AA). (Refer to step 2).
2. Disconnect 4 connectors (LCN101/351, LCN801, LCN802 and LCN803) on the Primary Transport P. C. Board (103).
3. Disconnect 4 connectors (LCN304/1101, LCN804, LCN805 and LCN806) on the Secondary Transport P. C. Board (103).
4. Disconnect 5 Jumper Leads (JL1, JL2, JL3, JL4 and JL5) from 5 connectors (CN805, CN804, CN803, CN802 and CN801) on the Power P. C. Board (PCB-4).
5. Remove 9 screws (G), 1 screw (H) and 2 screws (I) and then remove the Main P. C. Board (PCB-1).

6 POWER P. C. BOARD (PCB-4) REMOVAL

1. Remove the Front Panel Assembly (AA). (Refer to step 2).
2. Disconnect 5 Jumper Leads (JL1, JL2, JL3, JL4 and JL5) on the Power P. C. Board (PCB-4).
3. Disconnect 3 connectors (LCN801, LCN802 and LCN803) on the Primary Transport P. C. Board.
4. Remove 5 screws (J) and 4 screws (K), and then remove the Power P. C. Board (PCB-4).

7 OTHER P.C. BOARDS REMOVAL

1. Remove the Front Panel Assembly (AA). (Refer to step 2).
2. Remove 4 screws (L), and then remove the Cont SW-L P. C. Board (PCB-6).
3. Remove 4 screws (M), and then remove the Cont SW-R P. C. Board (PCB-7).
4. Remove 4 Rotary Knobs (146) and 3 screws (N), and then remove the Volume P. C. Board (PCB-2).
5. Remove 7 screws (O), and then remove the Front P. C. Board (PCB-5).

POWER CORD REPLACEMENT (FOR SERVICE ENGINEERS OTHER THAN NORTH AMERICA)

In order to prevent fire shock hazard when replacing the power cord, follow the Procedure below to replace the part with the standard supply parts.

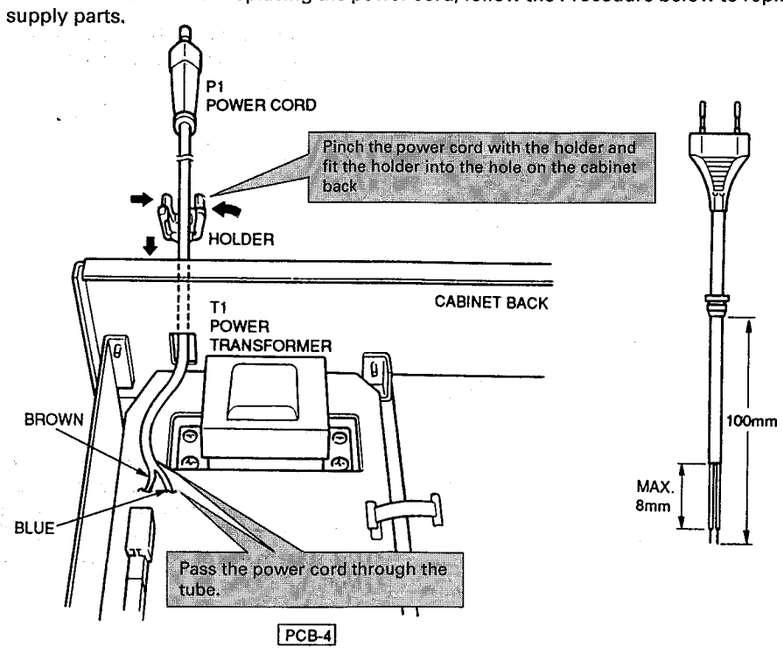

CIRCUIT DESCRIPTION

PLAYBACK SIGNAL

The signal from the playback head (Primary Transport) is amplified by the playback amplifier Q101, Q103 and Q105 (L ch.), and is applied to the pin 29 (L ch.) and 2 (R ch.) of the Dolby NR IC501 (B/C type). Switching of the playback signal from the record mode (external input signal) to the playback mode is performed inside IC501. IC501 is usually switched to the playback mode. However, the control signal transmitted to the pin 5 of IC501 from IC751 through Q505 and Q506 switches IC501 from the record mode to the playback mode. The input signal to IC501 is output from the pins 25 (Lch.) and 6 (R ch.) and applied to the OUTPUT Jack (J1).
Use the same signal for both the secondary transport and the primary transport.

RECORD SIGNAL

[PRIMARY SIDE]
The signal from the INPUT jack is controlled by the INPUT LEVEL control. It is applied to the pins 30 (L ch.) and 1 (R ch.) of the Dolby NR IC501 (B/Ctype). Switching of the record signal from the playback mode to the record mode is performed inside IC501. The control signal transmitted to the pin 5 of IC501 from IC751 through Q505 and Q506 switches IC501 from the playback mode to the record mode.
The input signal to the Dolby NR IC is output from the pins 28 (L ch.) and 3 (R ch.) of IC501. Then it is input to the pins 27 (L ch.) and 4 (R ch.) and is output from the pins 24 (L ch.) and 7 (R ch.). The encoded signal is input to the pins 23 (L ch.) and 8 (Rch.) and then it is output from the pins 18 (L ch.) and 13 (R ch.). The signal output from IC501 passes through the record equalizer circuit and is amplified by the record amplifier of IC201. The amplified signal is then applied to the recording head after being synthesized by a bias signal.

[SECONDARY SIDE]
The signal from the INPUT jack is controlled by the INPUT LEVEL control. It is applied to the pins 30 (L ch.) and 1 (R ch.) of the Dolby NR IC551 (B/Ctype). Switching of the record signal from the playback mode to the record mode is performed inside IC551. The control signal transmitted to the pin 5 of IC551 from IC751 through Q531 and Q532 switches IC551 from the playback mode to the record mode.
The input signal to the Dolby NR IC is output from the pins 28 (L ch.) and 3 (R ch.) of IC551. Then it is input to the pins 27 (L ch.) and 4 (R ch.) and is output from the pins 24 (L ch.) and 7 (R ch.). The encoded signal is input to the pins 23 (L ch.) and 8 (Rch.) and then it is output from the pins 18 (L ch.) and 13 (R ch.). The signal output from IC551 passes through the record equalizer circuit and is amplified by the record amplifier of IC201. The amplified signal is then applied to the recording head after being synthesized by a bias signal.

MUTING OPERATION

The signal that mutes the sound produced at switching to recording or playback is applied from IC751 of the logic control block.
When the "STOP" button is pressed, the mute signal output from the pin 22 of IC751 turns ON Q709 (L ch.) and Q710 (R ch.) to short-circuit the output signals of the Dolby out for muting. For the purpose of preventing generation of noise at power ON/OFF, the mute signal is output from Q51. The muting is done by short circuiting the output signal with Q709 (L ch.) and Q710 (R ch.) turned ON.

LOGIC FOR RECORD MODE

[PRIMARY SIDE]
When the "REC" button is pressed, the pin 11 and 13 of IC751 becomes high level and Q109 (L ch.) and Q110 (R ch.) turn ON. The input to the Dolby NR IC is muted. Also Q712 and Q713 turn ON and Q711 turns OFF. Therefore Q701, Q703 (L ch.) and Q702, Q704 (R ch.) turn OFF to release the muting of the outputs from the record amplifiers.
Also, Q505 turns ON and Q506 turns OFF to make the pin 5 of IC501 high level. Therefore the mode is switched to the record mode.

[SECONDARY SIDE]
When the "REC" button is pressed, the pin 7 and 9 of IC751 becomes high level and Q1109 (L ch.) and Q1110 (R ch.) turn ON. The input to the Dolby NR IC is muted. Also Q1712 and Q1713 turn ON and Q1711 turns OFF. Therefore Q1701, Q1703 (L ch.) and Q1702, Q1704 (R ch.) turn OFF to release the muting of the outputs from the record amplifiers.
Also, Q531 turns ON and Q532 turns OFF to make the pin 5 of IC551 high level. Therefore the mode is switched to the record mode.

LOGIC FOR RECORD TO PLAYBACK MODE

When the "STOP" button is pressed, the pin 12 of IC751 becomes high level. Q731 turns ON and Q213 (L ch.), Q214 (R ch.) turn ON to mute the inputs to the record amplifiers. Also, Q712 and Q713 turn OFF and Q711 turns ON to turn ON Q701, Q703 (L ch.) and Q702, Q704 (R ch.). Therefore the outputs from the record amplifiers are muted.
Also, Q505 turns OFF and Q506 turns ON to make the pin 5 of IC501 low level. Therefore the mode is switched to the playback mode.

CIRCUIT DESCRIPTION

PLAYBACK SIGNAL

The signal from the playback head (Primary Transport) is amplified by the playback amplifier Q101, Q103 and Q105 (L ch.), and is applied to the pin 29 (L ch.) and 2 (R ch.) of the Dolby NR IC501 (B/C type). Switching of the playback signal from the record mode (external input signal) to the playback mode is performed inside IC501. IC501 is usually switched to the playback mode. However, the control signal transmitted to the pin 5 of IC501 from IC751 through Q505 and Q506 switches IC501 from the record mode to the playback mode. The input signal to IC501 is output from the pins 25 (Lch.) and 6 (R ch.) and applied to the OUTPUT Jack (J1).
Use the same signal for both the secondary transport and the primary transport.

RECORD SIGNAL

[PRIMARY SIDE]
The signal from the INPUT jack is controlled by the INPUT LEVEL control. It is applied to the pins 30 (L ch.) and 1 (R ch.) of the Dolby NR IC501 (B/Ctype). Switching of the record signal from the playback mode to the record mode is performed inside IC501. The control signal transmitted to the pin 5 of IC501 from IC751 through Q505 and Q506 switches IC501 from the playback mode to the record mode.
The input signal to the Dolby NR IC is output from the pins 28 (L ch.) and 3 (R ch.) of IC501. Then it is input to the pins 27 (L ch.) and 4 (R ch.) and is output from the pins 24 (L ch.) and 7 (R ch.). The encoded signal is input to the pins 23 (L ch.) and 8 (Rch.) and then it is output from the pins 18 (L ch.) and 13 (R ch.). The signal output from IC501 passes through the record equalizer circuit and is amplified by the record amplifier of IC201. The amplified signal is then applied to the recording head after being synthesized by a bias signal.

[SECONDARY SIDE]
The signal from the INPUT jack is controlled by the INPUT LEVEL control. It is applied to the pins 30 (L ch.) and 1 (R ch.) of the Dolby NR IC551 (B/Ctype). Switching of the record signal from the playback mode to the record mode is performed inside IC551. The control signal transmitted to the pin 5 of IC551 from IC751 through Q531 and Q532 switches IC551 from the playback mode to the record mode.
The input signal to the Dolby NR IC is output from the pins 28 (L ch.) and 3 (R ch.) of IC551. Then it is input to the pins 27 (L ch.) and 4 (R ch.) and is output from the pins 24 (L ch.) and 7 (R ch.). The encoded signal is input to the pins 23 (L ch.) and 8 (Rch.) and then it is output from the pins 18 (L ch.) and 13 (R ch.). The signal output from IC551 passes through the record equalizer circuit and is amplified by the record amplifier of IC201. The amplified signal is then applied to the recording head after being synthesized by a bias signal.

MUTING OPERATION

The signal that mutes the sound produced at switching to recording or playback is applied from IC751 of the logic control block.
When the "STOP" button is pressed, the mute signal output from the pin 22 of IC751 turns ON Q709 (L ch.) and Q710 (R ch.) to short-circuit the output signals of the Dolby out for muting. For the purpose of preventing generation of noise at power ON/OFF, the mute signal is output from Q51. The muting is done by short circuiting the output signal with Q709 (L ch.) and Q710 (R ch.) turned ON.

LOGIC FOR RECORD MODE

[PRIMARY SIDE]
When the "REC" button is pressed, the pin 11 and 13 of IC751 becomes high level and Q109 (L ch.) and Q110 (R ch.) turn ON. The input to the Dolby NR IC is muted. Also Q712 and Q713 turn ON and Q711 turns OFF. Therefore Q701, Q703 (L ch.) and Q702, Q704 (R ch.) turn OFF to release the muting of the outputs from the record amplifiers.
Also, Q505 turns ON and Q506 turns OFF to make the pin 5 of IC501 high level. Therefore the mode is switched to the record mode.

[SECONDARY SIDE]
When the "REC" button is pressed, the pin 7 and 9 of IC751 becomes high level and Q1109 (L ch.) and Q1110 (R ch.) turn ON. The input to the Dolby NR IC is muted. Also Q1712 and Q1713 turn ON and Q1711 turns OFF. Therefore Q1701, Q1703 (L ch.) and Q1702, Q1704 (R ch.) turn OFF to release the muting of the outputs from the record amplifiers.
Also, Q531 turns ON and Q532 turns OFF to make the pin 5 of IC551 high level. Therefore the mode is switched to the record mode.

LOGIC FOR RECORD TO PLAYBACK MODE

When the "STOP" button is pressed, the pin 12 of IC751 becomes high level. Q731 turns ON and Q213 (L ch.), Q214 (R ch.) turn ON to mute the inputs to the record amplifiers. Also, Q712 and Q713 turn OFF and Q711 turns ON to turn ON Q701, Q703 (L ch.) and Q702, Q704 (R ch.). Therefore the outputs from the record amplifiers are muted.
Also, Q505 turns OFF and Q506 turns ON to make the pin 5 of IC501 low level. Therefore the mode is switched to the playback mode.

DISASSEMBLY PROCEDURES (REFER TO PAGES 10, 11 and 12)

1 TOP COVER (133) REMOVAL

Remove 4 screws (A) and 2 screws (B), and then remove the Top Cover(133).

2 FRONT PANEL ASSEMBLY (AA) REMOVAL

1. Remove the Top Cover (133).
2. Disconnect 1 connector (JL901) from 1 connector (CN904) on the Main P. C. Board (PCB-1).
3. Remove 6 screws (C) and 3 screws (D), and then remove the Front Panel Assembly (AA).
4. If necessary, unsolder the lead wires.

3 PRIMARY CASSETTE TAPE RECORDER MECHANISM ASSEMBLY (103) REMOVEL

1. Remove the Front Panel Assembly (AA). (Refer to Step 2.)
2. Disconnect 4 connectors (LCN101/351, LCN801, LCN802 and LCN803) on the Primary Transport P. C. Board (103).
3. Remove 4 screws (E), and then the Cassette Tape Recorder Mechanism Assembly (103).

4 SECONDARY CASSETTE TAPE RECORDER MECHANISM ASSEMBLY (103) REMOVAL

1. Remove the Front Panel Assembly (AA). (Refer to Step 2).
2. Disconnect 4 connectors (LCN304/1101, LCN804, LCN805 and LCN806) on the Secondary Transport P. C. Board (103).
3. Remove 4 screws (F), and then the Cassette Tape Recorder Mechanism Assembly (103).

5 MAIN P. C. BOARD (PCB-1) REMOVAL

1. Remove the Front Panel Assembly (AA). (Refer to step 2).
2. Disconnect 4 connectors (LCN101/351, LCN801, LCN802 and LCN803) on the Primary Transport P. C. Board (103).
3. Disconnect 4 connectors (LCN304/1101, LCN804, LCN805 and LCN806) on the Secondary Transport P. C. Board (103).
4. Disconnect 5 Jumper Leads (JL1, JL2, JL3, JL4 and JL5) from 5 connectors (CN805, CN804, CN803, CN802 and CN801) on the Power P. C. Board (PCB-4).
5. Remove 9 screws (G), 1 screw (H) and 2 screws (I) and then remove the Main P. C. Board (PCB-1).

6 POWER P. C. BOARD (PCB-4) REMOVAL

1. Remove the Front Panel Assembly (AA). (Refer to step 2).
2. Disconnect 5 Jumper Leads (JL1, JL2, JL3, JL4 and JL5) on the Power P. C. Board (PCB-4).
3. Disconnect 3 connectors (LCN801, LCN802 and LCN803) on the Primary Transport P. C. Board.
4. Remove 5 screws (J) and 4 screws (K), and then remove the Power P. C. Board (PCB-4).

7 OTHER P.C. BOARDS REMOVAL

1. Remove the Front Panel Assembly (AA). (Refer to step 2).
2. Remove 4 screws (L), and then remove the Cont SW-L P. C. Board (PCB-6).
3. Remove 4 screws (M), and then remove the Cont SW-R P. C. Board (PCB-7).
4. Remove 4 Rotary Knobs (146) and 3 screws (N), and then remove the Volume P. C. Board (PCB-2).
5. Remove 7 screws (O), and then remove the Front P. C. Board (PCB-5).

POWER CORD REPLACEMENT (FOR SERVICE ENGINEERS OTHER THAN NORTH AMERICA)

In order to prevent fire shock hazard when replacing the power cord, follow the Procedure below to replace the part with the standard supply parts.

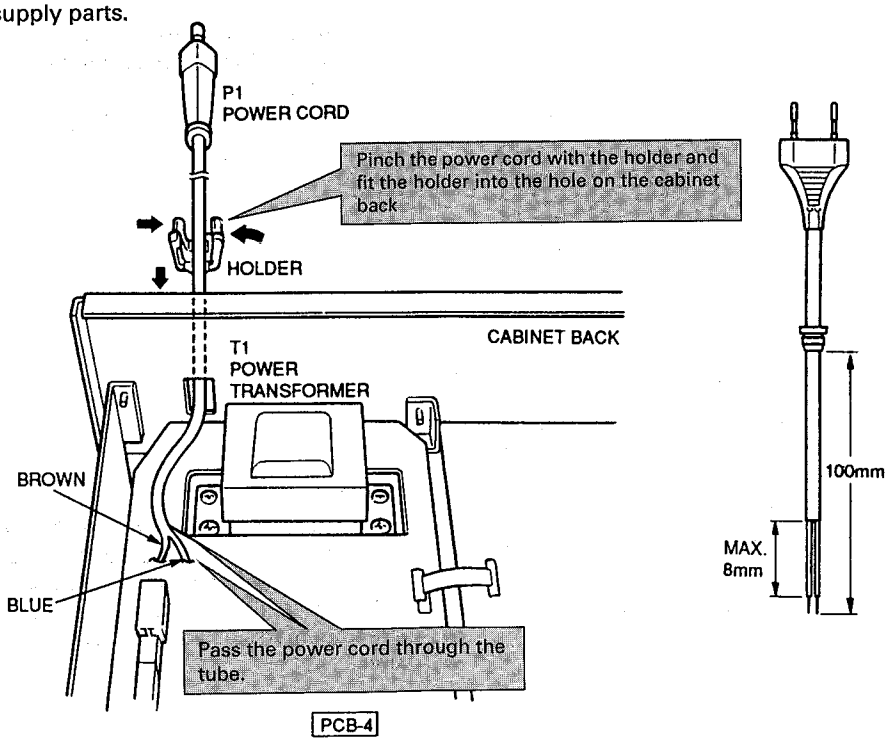

TIMING CHART

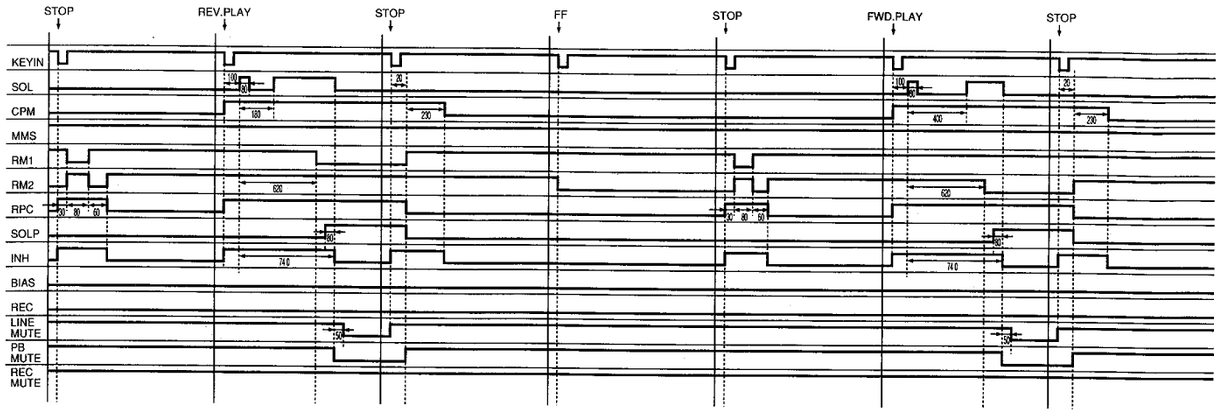

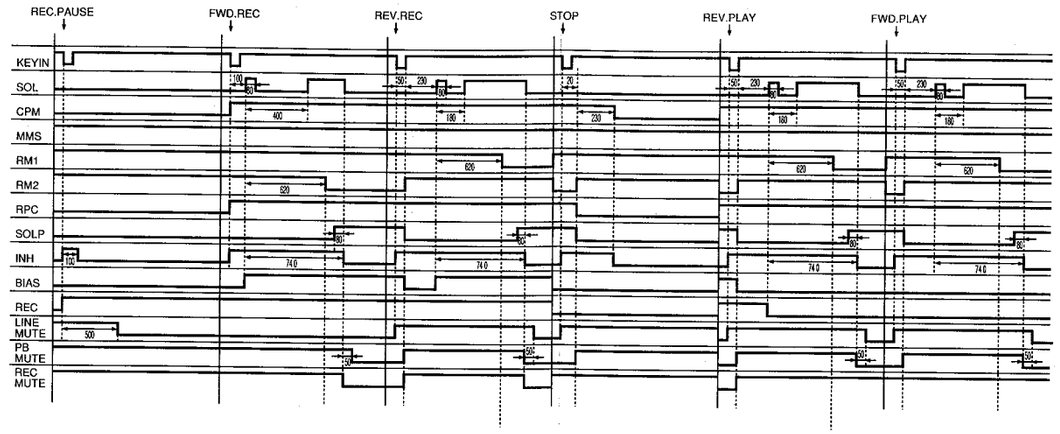

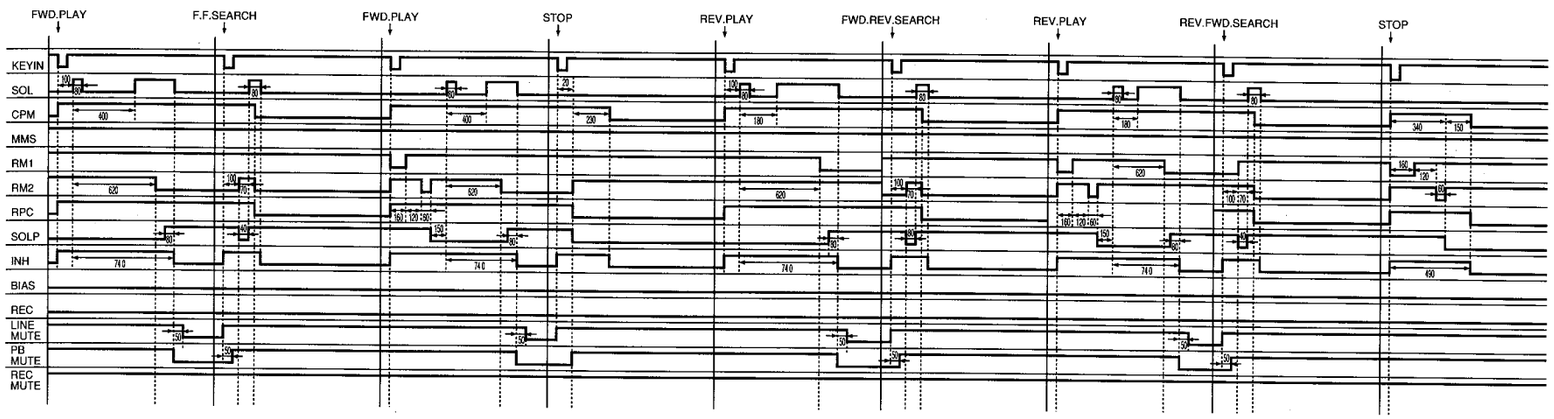

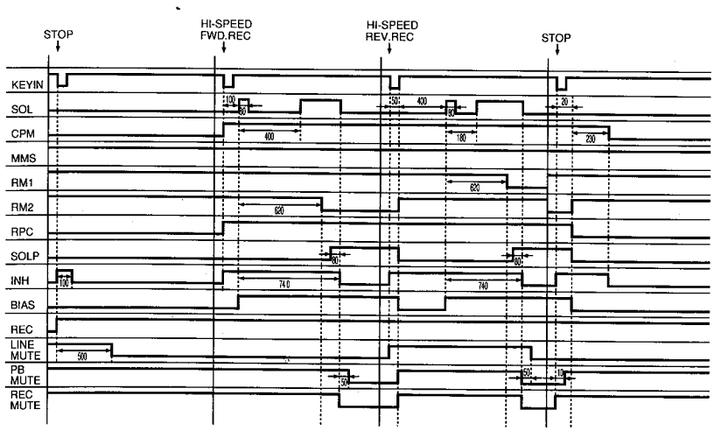

TIMING CHART

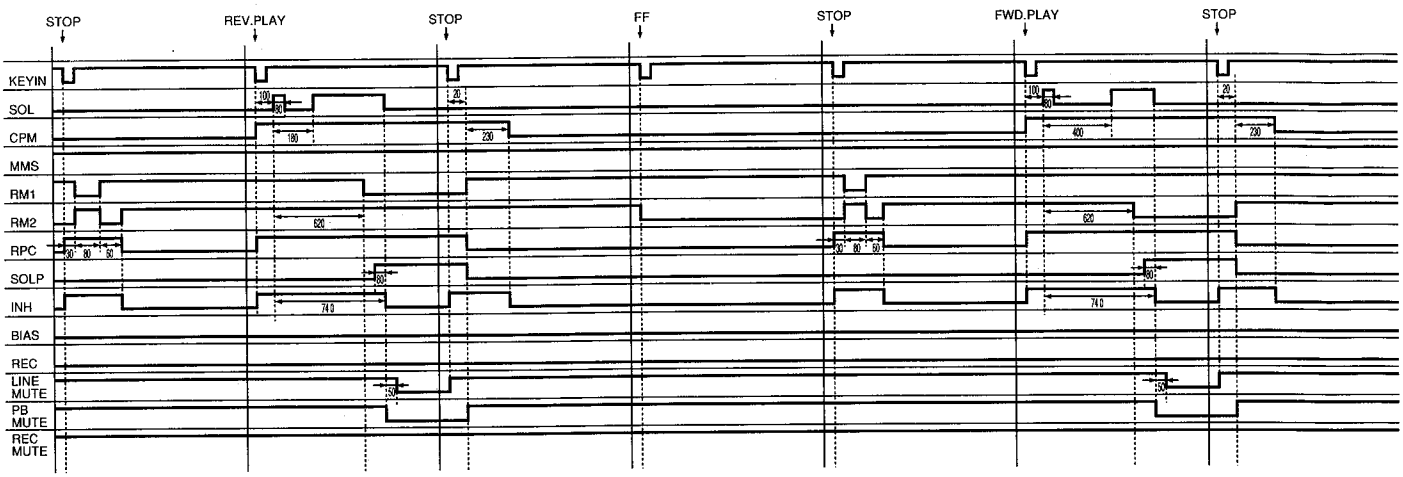

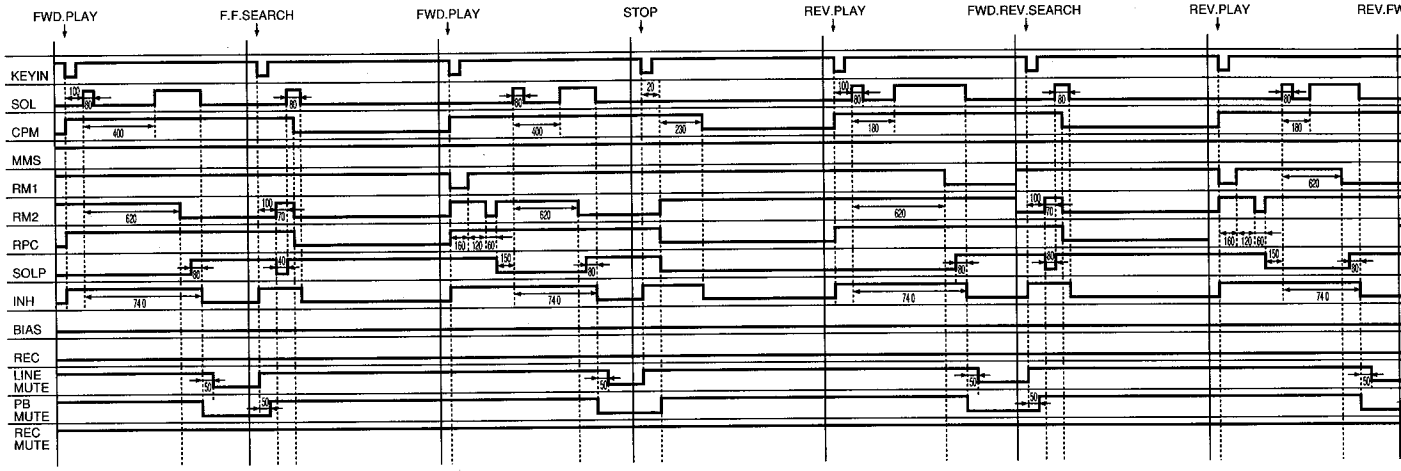

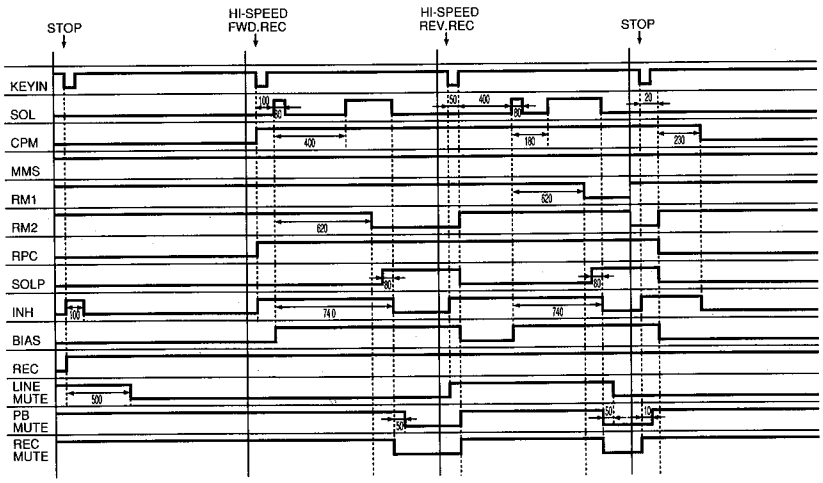

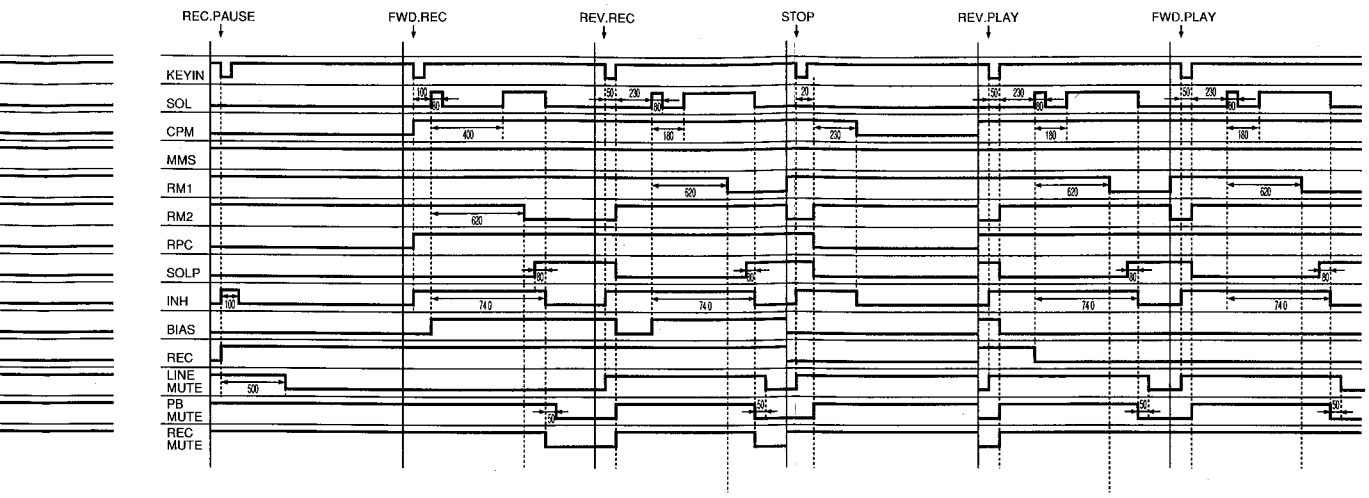
REC.PAUSE
FWD.REC
REV.REC
STOP
REV.PLAY
FWD.PLAY
KEYIN
SOL
CPM
MMS
RM1
RM2
RPC
SOLP
INH
BIAS
REC
LINE MUTE
PB MUTE
REC MUTE

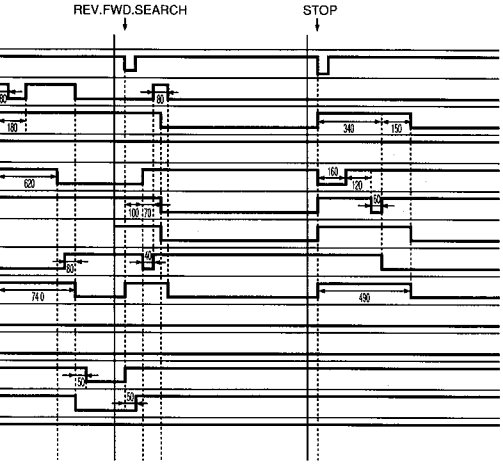
REV.FWD.SEARCH
STOP

ALIGNMENT PROCEDURES (REFER TO PAGES 13, 14, 27 through and 31)

CASSETTE MECHANISM CONFIRMATION

Make sure to confirm conditons of the cassette mechanism as follows before adjustment.

1. Confirmation of erase prevention function
- The switch should turn ON when a tape with erroneous erase preventive pawl is inserted. (Use a tape which is 0.2 mm smaller than the minimum size of 62.9 mm or a MAZ-0184-C gauge one.)
- When the switch arm is moved back gradually from the ON position, the switch turn OFF.

2. Confirmation of cassette pack detection function
- The switch should turn ON when a tape is inserted. (Use a tape whose minimum size is 63.5 mm or a MAZ-0184-C gauge one.)
- When the switch arm is moved back gradually from the ON position, the switch should turn OFF.

3. Confirmation of eject function
- The cassette compartment opens smoothy and no abnormal noise should be heard while opening and closing.
- The eject lever opens smoothly without contacting the chassis and damper.
- The eject button can not be pressed during playback.

4. Confirmation of playback, fast forward and rewind functions
- The torque used in each of the playback, fast forward and rewind modes should be within specification.

  Playback .....35 gr.cm – 70 gr.cm
  Fast Forward .....70 gr.cm – 150 gr.cm
  Rewind .....70 gr.cm – 150 gr.cm
- No abnormal noise should be heard during operation in any mode. The solenoid switching sound should not be considered as a noise.

5. Confirmation of positions of record/playback heads
- Head height

a) Set the M-300 head gauge.
b) Set the unit in the playback mode and place the adjustment chip on the head gauge as shown in the Fig. 1.
c) The adjustment chip should not contact the tape guide of both record/playback heads.

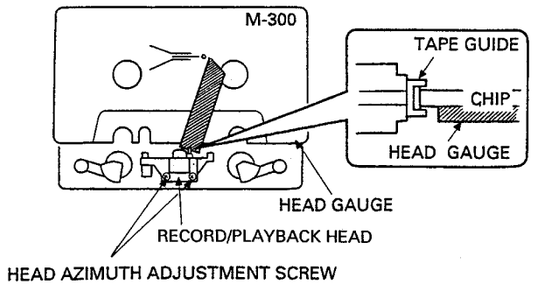

Fig. 1

- Head position

a) Set the M-300 head gauge.
b) Set the unit in the playback mode and place the adjustment chip on the head gauge as shown in the Fig. 2.
c) With both record/playback heads the adjustment chip should be between MIN and MAX of the M-300 head gauge.

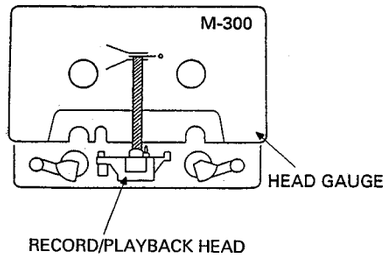

Fig. 2

ELECTRICAL ADJUSTMENT AND CONFIRMATION

1. Before adjustment
- Before electrical adjustment, make sure that confirmations of the cassette mechanism are all completed.
- After the power switch is pushed on, wait for 10 minutes before measuring to be sure of the most stable operation.
- Since head magnetization, dust accumulations, etc. are likely to introduce errors in the various characteristics, it is very important that the heads are properly demagnetized and cleaned before commencing any adjustment, particularly frequency response and head azimuth adjustment.

2. Instruments required
- Low frequency oscillator
- AC VTVM or dual channel AC VTVM
- Oscilloscope
- Wow/flutter meter
- Frequency counter
- Distortion meter

3. Test tapes
- Azimuth adjustment TCC-153
- Tape speed adjustment MTT-111DN
- Playback output level adjustment TCC-130
- Music search adjustment SCC-1425
- Playback frequency characteristic confirmation .....TCC-1216 or TCC-162C and TCC-262C
- Reference tapes
  LN SCC-502
  CrO_2 .....SCC-1360
  METAL SCC-565

Note:
C-90 differes with C-60 in the thickness and bias is of unequal, so adjust with the tape whose bias in of Specified Value.

4. General conditions (unless otherwise noted)

Controls and Switches	Settings
Dolby NR	Off
Input Level	Maximum
MPX Filter	Off
Bias Fine Trim	Center
Input Balance	Center

Azimuth Adjustment
When the maximum level point of R channel does not equal that L channel, connect the oscilloscope as shown in Fig. 3 and proceed with azimuth adjustment so that L and R channels are in phase.

a) Connect L channel tape out to "X (or V)" and R channel to "Y (or H)". Observe the lissajouss waveform.
b) Set L and R channels to monaural. Adjust vertical and horizontal gain so that the waveform becomes 45 degree.
c) Adjust azimuth so that the measurement of "a" becomes maximum and the measurement of "b" becomes minimum against the 45 degree line.

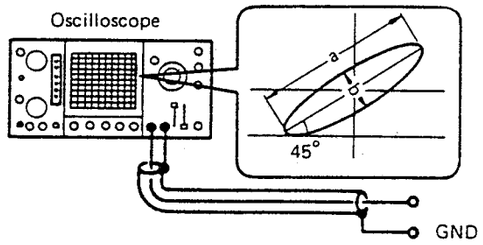

Fig. 3

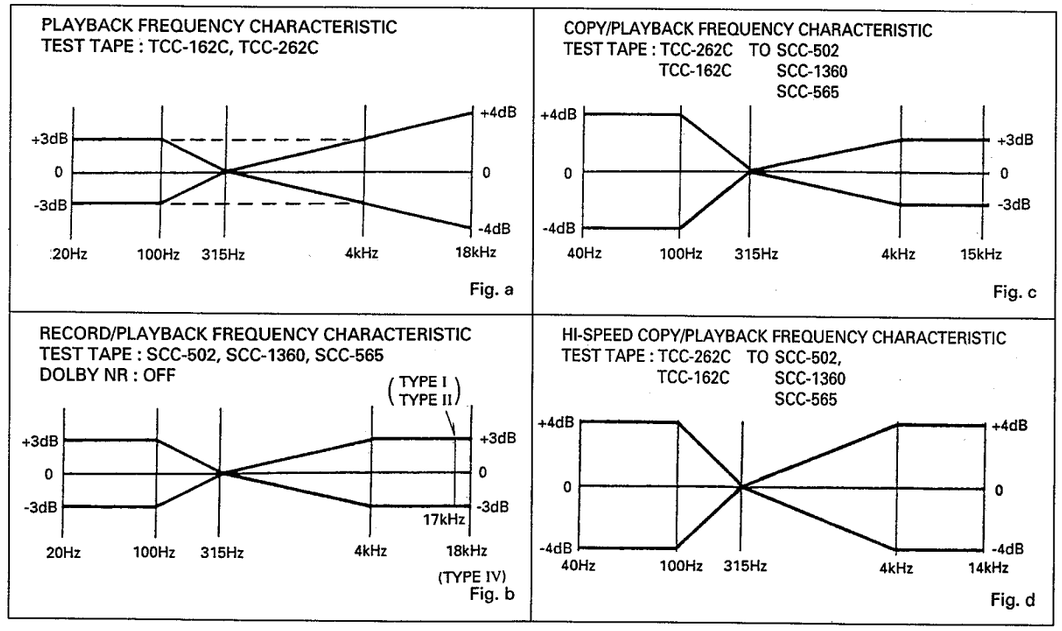

ALIGNMENT PROCEDURES (REFER TO PAGES 13, 14, 27 through and 31)

CASSETTE MECHANISM CONFIRMATION

Make sure to confirm conditons of the cassette mechanism as follows before adjustment.

1. Confirmation of erase prevention function

- The switch should turn ON when a tape with erroneous erase preventive pawl is inserted. (Use a tape which is 0.2 mm smaller than the minimum size of 62.9 mm or a MAZ-0184-C gauge one.)
- When the switch arm is moved back gradually from the ON position, the switch turn OFF.

2. Confirmation of cassette pack detection function

- The switch should turn ON when a tape is inserted. (Use a tape whose minimum size is 63.5 mm or a MAZ-0184-C gauge one.)
- When the switch arm is moved back gradually from the ON position, the switch should turn OFF.

3. Confirmation of eject function

- The cassette compartment opens smoothy and no abnormal noise should be heard while opening and closing.
- The eject lever opens smoothly without contacting the chassis and damper.
- The eject button can not be pressed during playback.

4. Confirmation of playback, fast forward and rewind functions

- The torque used in each of the playback, fast forward and rewind modes should be within specification.

  Playback .....35 gr.cm – 70 gr.cm
  Fast Forward .....70 gr.cm – 150 gr.cm
  Rewind .....70 gr.cm – 150 gr.cm

- No abnormal noise should be heard during operation in any mode. The solenoid switching sound should not be considered as a noise.

5. Confirmation of positions of record/playback heads

- Head height

a) Set the M-300 head gauge.
b) Set the unit in the playback mode and place the adjustment chip on the head gauge as shown in the Fig. 1.
c) The adjustment chip should not contact the tape guide of both record/playback heads.

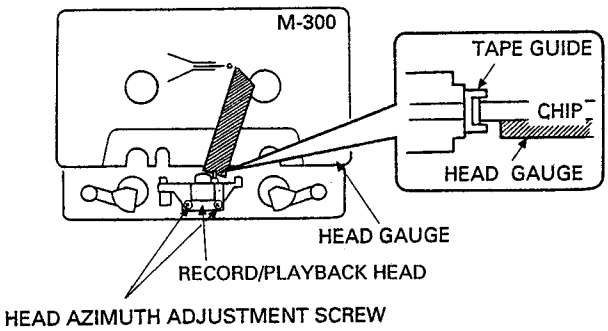

Fig. 1

- Head position

a) Set the M-300 head gauge.
b) Set the unit in the playback mode and place the adjustment chip on the head gauge as shown in the Fig. 2.
c) With both record/playback heads the adjustment chip should be between MIN and MAX of the M-300 head gauge.

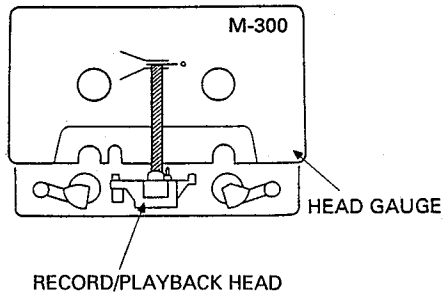

Fig. 2

ELECTRICAL ADJUSTMENT AND CONFIRMATION

1. Before adjustment

- Before electrical adjustment, make sure that confirmations of the cassette mechanism are all completed.
- After the power switch is pushed on, wait for 10 minutes before measuring to be sure of the most stable operation.
- Since head magnetization, dust accumulations, etc. are likely to introduce errors in the various characteristics, it is very important that the heads are properly demagnetized and cleaned before commencing any adjustment, particularly frequency response and head azimuth adjustment.

2. Instruments required

- Low frequency oscillator
- AC VTVM or dual channel AC VTVM
- Oscilloscope
- Wow/flutter meter
- Frequency counter
- Distortion meter

3. Test tapes

- Azimuth adjustment TCC-153
- Tape speed adjustment MTT-111DN
- Playback output level adjustment TCC-130
- Music search adjustment SCC-1425
- Playback frequency characteristic confirmation ..... TCC-1216 or TCC-162C and TCC-262C
- Reference tapes
  LN SCC-502
  CrO_2 ..... SCC-1360
  METAL SCC-565

Note:
C-90 differes with C-60 in the thickness and bias is of unequal, so adjust with the tape whose bias in of Specified Value.

4. General conditions (unless otherwise noted)

Controls and Switches	Settings
Dolby NR	Off
Input Level	Maximum
MPX Filter	Off
Bias Fine Trim	Center
Input Balance	Center

Azimuth Adjustment
When the maximum level point of R channel does not equal that L channel, connect the oscilloscope as shown in Fig. 3 and proceed with azimuth adjustment so that L and R channels are in phase.

a) Connect L channel tape out to "X (or V)" and R channel to "Y (or H)". Observe the lissajouss waveform.
b) Set L and R channels to monaural. Adjust vertical and horizontal gain so that the waveform becomes 45 degree.
c) Adjust azimuth so that the measurement of "a" becomes maximum and the measurement of "b" becomes minimum against the 45 degree line.

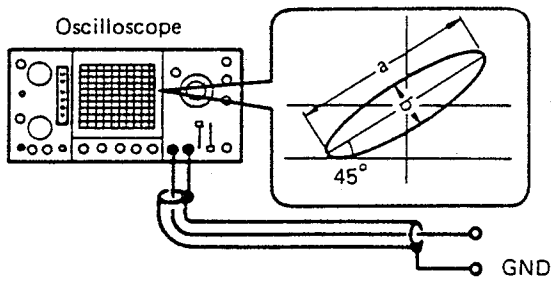

Fig. 3

PLAYBACK FREQUENCY CHARACTERISTIC
TEST TAPE : TCC-162C, TCC-262C

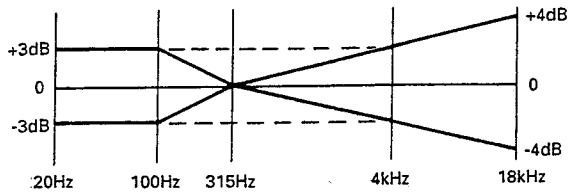

Fig. a

COPY/PLAYBACK FREQUENCY CHARACTERISTIC
TEST TAPE : TCC-262C TO SCC-502
TCC-162C SCC-1360
SCC-565

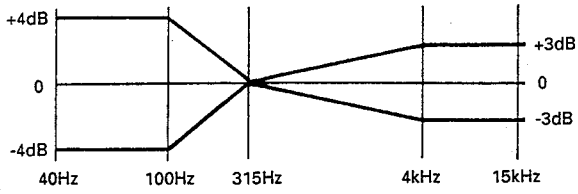

Fig. c

RECORD/PLAYBACK FREQUENCY CHARACTERISTIC
TEST TAPE : SCC-502, SCC-1360, SCC-565
DOLBY NR : OFF

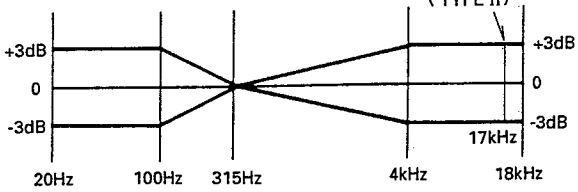

(TYPE IV)
Fig. b

HI-SPEED COPY/PLAYBACK FREQUENCY CHARACTERISTIC
TEST TAPE : TCC-262C TO SCC-502,
TCC-162C SCC-1360
SCC-565

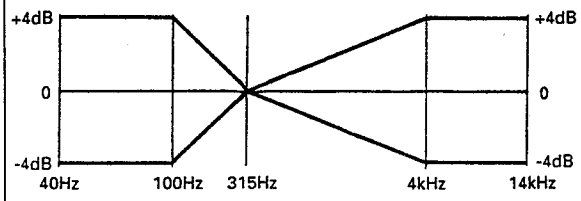

Fig. d

1. PRIMARY DECK SECTION

Step	Alignment	Instrument Required	Input Signal	Mode	Test Point	Adjustment	For
1	Quick sensor	VTVM Black tape (SCC-502)		PB	TP809	VR803	Adjust VR803 so the voltage at the test point is 0.62V or higher when the leader tape is running and 200 mV or less in the middle of tape.
2	Azimuth	VTVM Oscilloscope Test tape (TCC-153)		PB	TP501 (L ch), GND TP502 (R ch), GND	Azimuth screw	Maximum output Refer to "Azimuth Adjustment" on page 6.
3	Tape speed (Hi-speed)	Frequency counter Test tape (MTT-111DN)		PB	TP501 (L ch), GND TP502 (R ch), GND	VR801	6020 Hz ±20 Hz (TP806 : GND connection) Adjust at the center of test tape.
4	Tape speed (Normal speed)	Frequency counter Test tape (MTT-111DN)		PB	TP501 (L ch), GND TP502 (R ch), GND	VR802	3010 Hz ±10 Hz Adjust at the center of test tape.
5	Playback output level	VTVM Test tape (TCC-130)		PB	TP501 (L ch), GND TP502 (R ch), GND	VR101 (L ch) VR102 (R ch)	775 mV Tape selector is Normal position. Adjust at Dolby NR off.
6	Playback frequency characteristic confirmation	VTVM Test tape (TCC-1216 or TCC-162C and TCC-262C)		PB	TP501 (L ch), GND TP502 (R ch), GND	VR103 VR104	Adjust VR103 and VR104 so the playback frequency response (1 kHz/18 kHz) is +0.6 ~ 0.7 dB. Refer to Fig. a.
7	Music Search	Oscilloscope Test tape (SCC-1425)		FORWARD SEARCH	TP601, GND	VR602	3.0 ±0.05V To be adjusted at the beginning of tape winding. 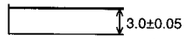
8	Blank Search	Oscilloscope Test tape (SCC-1425)		SEARCH PLAYBACK	TP601, GND	VR601	1.0V or higher To be measured at the low level part of SCC-1425 tape. 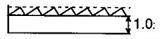
9	Bias frequency confirmation	Frequency counter Blank tape (SCC-565)		DUAL REC	TP101 (L ch), GND TP102 (R ch), GND	T301	105 kHz ±2 kHz Use METAL tape.
10	Bias trans.	Blank tape (SCC-565)		REC/PB	TP306, GND TP301, GND (L ch) TP302, GND (R ch)	T302 L301 L302	Connect the oscilloscope to TP306 and GND and adjust T302 so that the waveform is maximum. Connect the oscilloscope to TP301 and GND, TP302 and GND and adjust L301, L302 so that the DC voltage is minimum.
11	Bias trap	VTVM Blank tape (SCC-565)		REC/PB	TP201 (L ch), GND TP202 (R ch), GND	LC201 LC202	Minimum output. Use METAL tape. INPUT VR. minimum
12 - 1	Bias level (pre-adjustment)	VTVM Blank tapes METAL SCC-565 CrO_2 SCC-1360 Normal SCC-502		REC/PB	TP101 (L ch), GND TP102 (R ch), GND	VR301 VR302	35 mV Test tape is METAL blank tape. Short-circuit R708 and JP699, R707 and JP700.
12 - 2						VR305 VR306	20 mV Test tape is CrO_2 blank tape. Short-circuit R708 and JP699, R707 and JP700.
12 - 3						VR303 VR304	15 mV Test tape is Normal blank tape. Short-circuit R708 and JP699, R707 and JP700.
13	Record level (pre-adjustment)	VTVM Blank tapes METAL SCC-565 CrO_2 SCC-1360 Normal SCC-502	Apply 1 kHz signal to INPUT jack. Set INPUT LEVEL knob so that TP501 and TP502 to GND voltage is 775 mV in REC-PAUSE mode.	REC/PB	TP501 (L ch), GND TP502 (R ch), GND	VR201, VR202 VR301 VR302	775 mV Test tape is METAL tape. Adjust variable resistors so that the distortion becomes 0.9% – 1.2%. (Mini. distortion)
						VR305 VR306 (CrO_2)	775 mV Adjust variable resistors so that the distortion becomes 0.9% (CrO_2).
						VR303 VR304 (Normal)	Adjust variable resistors so that the distortion becomes 0.8% (Normal). This confirmation should be at each tape selector position.
14 - 1	Record/playback frequency characteristic	VTVM Blank tapes CrO_2 SCC-1360 METAL SCC-565 Normal SCC-502	Apply 1 kHz signal to INPUT jack. The output at TP501 and TP502 are Dolby level -25dB. Then adjust with a 20 Hz to 30 kHz sweep signal.	REC/PB	OUTPUT jack	VR305, VR306 LC201, LC202 (VR301, VR302)	So that the record/playback frequency resportion is flat (at least within the range in Fig. b.) Test tape is CrO_2 tape.
14 - 2						VR301 VR302	So that the record/playback frequency resportion is flat (at least within the range in Fig. b.) Test tape is METAL tape.
14 - 3						VR303, VR304 LC201, LC202 (VR301, VR302)	So that the record/playback frequency resportion is flat (at least within the range in Fig. b.) Test tape is Normal tape.
15	Record level	VTVM Blank tapes CrO_2 SCC-1360 METAL SCC-565 Normal SCC-502	Set INPUT LEVEL knob so that TP501 and TP502 to GND voltage is 775 mV (1 kHz) in REC-PAUSE mode.	REC/PB	TP501 (L ch), GND TP502 (R ch), GND	VR201 VR202	775 mV Perform adjustment using CrO_2. Perform checking only for Normal and METAL tapes.
16	Copy level	Test tape TCC-130 (Secondary) Blank tape SCC-1360 (Primary)		EDIT	OUTPUT	VR551 VR552	Perform edit copy and adjust VR551 and VR552 so that the copy output (PLAY output) of PRI DECK is 775 mV.
17	High speed copy frequency characteristic	VTVM Blank tapes CrO_2 SCC-1360 METAL SCC-565 Normal SCC-502 Test tape TCC-185C		High Speed Copy Play	OUTPUT	L203, L204	Load TCC-185C in SEC DECK and SCC-565 in PRI DECK and execute high-speed copying, then play the tape in the PRI DECK. Check that the frequency response of the 14 kHz signal is within ±3 dB of that of the 1 kHz signal. If this specification cannot be satisfied, adjust L203 and L204. After adjustment is confirmed, also use the SCC-502 and SCC-1360 tapes to check.
18	High speed copy frequency characteristic	VTVM Blank tapes CrO_2 SCC-1360 METAL SCC-565 Normal SCC-502 Test tape TCC-285C		High Speed Copy Play	OUTPUT	L203, L204	Load TCC-285C in SEC DECK and SCC-565 in PRI DECK and execute high-speed copying, then play the tape in the PRI DECK. Check that the frequency response of the 14 kHz signal is within ±3 dB of that of the 1 kHz signal. If this specification cannot be satisfied, adjust L203 and L204. After adjustment is confirmed, also use the SCC-502 and SCC-1360 tapes to check.
19	Meter level	VTVM	Apply 1 kHz signal to INPUT jack. Set INPUT LEVEL knob so that TP501 and TP502 to GND voltage is 1.5 dB below 775 mV.	REC/PAUSE	PEAK LEVEL METER	VR401 VR402	Adjust so the -1 dB segments light.
20	MPX filter characteristic confirmation	VTVM	Apply 19 kHz, 15 kHz and 1 kHz signal to INPUT jack. Set INPUT LEVEL knob so that TP501 and TP502 to GND voltage is 775mV.	REC/PAUSE MPX filter ON	TP501 (L ch), GND TP502 (R ch), GND	LC501 LC502	Adjust for -0.3 dB at 15 kHz and > 35 dB at 19 kHz.

1. PRIMARY DECK SECTION

Step	Alignment	Instrument Required	Input Signal	Mode	Test Poin
1	Quick sensor	VTVM Black tape (SCC-502)		PB	TP809
2	Azimuth	VTVM Oscilloscope Test tape (TCC-153)		PB	TP501 (L ch) TP502 (R ch)
3	Tape speed (Hi-speed)	Frequency counter Test tape (MTT-111DN)		PB	TP501 (L ch) TP502 (R ch)
4	Tape speed (Normal speed)	Frequency counter Test tape (MTT-111DN)		PB	TP501 (L ch) TP502 (R ch)
5	Playback output level	VTVM Test tape (TCC-130)		PB	TP501 (L ch) TP502 (R ch
6	Playback frequency characteristic confirmation	VTVM Test tape (TCC-1216 or TCC-162C and TCC-262C)		PB	TP501 (L ch) TP502 (R ch
7	Music Search	Oscilloscope Test tape (SCC-1425)		FORWARD SEARCH	TP601, GND
8	Blank Search	Oscilloscope Test tape (SCC-1425)		SEARCH PLAYBACK	TP601, GND
9	Bias frequency confirmation	Frequency counter Blank tape (SCC-565)		DUAL REC	TP101 (L ch) TP102 (R ch
10	Bias trans.	Blank tape (SCC-565)		REC/PB	TP306, GND TP301, GND TP302, GND
11	Bias trap	VTVM Blank tape (SCC-565)		REC/PB	TP201 (L ch TP202 (R ch
12 1 2 3	Bias level (pre-adjustment)	VTVM Blank tapes METAL SCC-565 CrO_2 SCC-1360 Normal SCC-502		REC/PB	TP101 (L ch TP102 (R ch
13	Record level (pre-adjustment)	VTVM Blank tapes METAL SCC-565 CrO_2 SCC-1360 Normal SCC-502	Apply 1 kHz signal to INPUT jack. Set INPUT LEVEL knob so that TP501 and TP502 to GND voltage is 775 mV in REC-PAUSE mode.	REC/PB	TP501 (L ch TP502 (R ch
14 1 2 3	Record/playback frequency characteristic	VTVM Blank tapes CrO_2 SCC-1360 METAL SCC-565 Normal SCC-502	Apply 1 kHz signal to INPUT jack. The output at TP501 and TP502 are Dolby level -25dB. Then adjust with a 20 Hz to 30 kHz sweep signal.	REC/PB	OUTPUT ja
15	Record level	VTVM Blank tapes CrO_2 SCC-1360 METAL SCC-565 Normal SCC-502	Set INPUT LEVEL knob so that TP501 and TP502 to GND voltage is 775 mV (1 kHz) in REC-PAUSE mode.	REC/PB	TP501 (L ch TP502 (R ch
16	Copy level	Test tape TCC-130 (Secondary) Blank tape SCC-1360 (Primary)		EDIT	OUTPUT
17	High speed copy frequency characteristic	VTVM Blank tapes CrO_2 SCC-1360 METAL SCC-565 Normal SCC-502 Test tape TCC-185C		High Speed Copy Play	OUTPUT
18	High speed copy frequency characteristic	VTVM Blank tapes CrO_2 SCC-1360 METAL SCC-565 Normal SCC-502 Test tape TCC-285C		High Speed Copy Play	OUTPUT
19	Meter level	VTVM	Apply 1 kHz signal to INPUT jack. Set INPUT LEVEL knob so that TP501 and TP502 to GND voltage is 1.5 dB below 775 mV.	REC/PAUSE	PEAK LEVE METER
20	MPX filter characteristic confirmation	VTVM	Apply 19 kHz, 15 kHz and 1 kHz signal to INPUT jack. Set INPUT LEVEL knob so that TP501 and TP502 to GND voltage is 775mV.	REC/PAUSE MPX filter ON	TP501 (L c TP502 (R c

	Test Point	Adjustment	For
	TP809	VR803	Adjust VR803 so the voltage at the test point is 0.62V or higher when the leader tape is running and 200 mV or less in the middle of tape.
	TP501 (L ch), GND TP502 (R ch), GND	Azimuth screw	Maximum output Refer to "Azimuth Adjustment" on page 6.
	TP501 (L ch), GND TP502 (R ch), GND	VR801	6020 Hz ±20 Hz (TP806 : GND connection) Adjust at the center of test tape.
	TP501 (L ch), GND TP502 (R ch), GND	VR802	3010 Hz ±10 Hz Adjust at the center of test tape.
	TP501 (L ch), GND TP502 (R ch), GND	VR101 (L ch) VR102 (R ch)	775 mV Tape selector is Normal position. Adjust at Dolby NR off.
	TP501 (L ch), GND TP502 (R ch), GND	VR103 VR104	Adjust VR103 and VR104 so the playback frequency response (1 kHz/18 kHz) is +0.6 ~ 0.7 dB. Refer to Fig. a.
RD H	TP601, GND	VR602	3.0 ±0.05V To be adjusted at the beginning of tape winding. 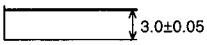
H ACK	TP601, GND	VR601	1.0V or higher To be measured at the low level part of SCC-1425 tape. 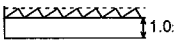
	TP101 (L ch), GND TP102 (R ch), GND	T301	105 kHz ±2 kHz Use METAL tape.
	TP306, GND TP301, GND (L ch) TP302, GND (R ch)	T302 L301 L302	Connect the oscilloscope to TP306 and GND and adjust T302 so that the waveform is maximum. Connect the oscilloscope to TP301 and GND, TP302 and GND and adjust L301, L302 so that the DC voltage is minimum.
	TP201 (L ch), GND TP202 (R ch), GND	LC201 LC202	Minimum output. Use METAL tape. INPUT VR. minimum
	TP101 (L ch), GND TP102 (R ch), GND	VR301 VR302	35 mV Test tape is METAL blank tape. Short-circuit R708 and JP699, R707 and JP700.
		VR305 VR306	20 mV Test tape is CrO_2 blank tape. Short-circuit R708 and JP699, R707 and JP700.
		VR303 VR304	15 mV Test tape is Normal blank tape. Short-circuit R708 and JP699, R707 and JP700.
	TP501 (L ch), GND TP502 (R ch), GND	VR201, VR202 VR301 VR302	775 mV Test tape is METAL tape. Adjust variable resistors so that the distortion becomes 0.9% – 1.2%. (Mini. distortion)
		VR305 VR306 (CrO_2)	775 mV Adjust variable resistors so that the distortion becomes 0.9% (CrO_2).
		VR303 VR304 (Normal)	Adjust variable resistors so that the distortion becomes 0.8% (Normal). This confirmation should be at each tape selector position.
	OUTPUT jack	VR305, VR306 LC201, LC202 (VR301, VR302)	So that the record/playback frequency resportion is flat (at least within the range in Fig. b.) Test tape is CrO_2 tape.
		VR301 VR302	So that the record/playback frequency resportion is flat (at least within the range in Fig. b.) Test tape is METAL tape.
		VR303, VR304 LC201, LC202 (VR301, VR302)	So that the record/playback frequency resportion is flat (at least within the range in Fig. b.) Test tape is Normal tape.
	TP501 (L ch), GND TP502 (R ch), GND	VR201 VR202	775 mV Perform adjustment using CrO_2. Perform checking only for Normal and METAL tapes.
	OUTPUT	VR551 VR552	Perform edit copy and adjust VR551 and VR552 so that the copy output (PLAY output) of PRI DECK is 775 mV.
peed lay	OUTPUT	L203, L204	Load TCC-185C in SEC DECK and SCC-565 in PRI DECK and execute high-speed copying, then play the tape in the PRI DECK. Check that the frequency response of the 14 kHz signal is within ±3 dB of that of the 1 kHz signal. If this specification cannot be satisfied, adjust L203 and L204. After adjustment is confirmed, also use the SCC-502 and SCC-1360 tapes to check.
peed lay	OUTPUT	L203, L204	Load TCC-285C in SEC DECK and SCC-565 in PRI DECK and execute high-speed copying, then play the tape in the PRI DECK. Check that the frequency response of the 14 kHz signal is within ±3 dB of that of the 1 kHz signal. If this specification cannot be satisfied, adjust L203 and L204. After adjustment is confirmed, also use the SCC-502 and SCC-1360 tapes to check.
USE	PEAK LEVEL METER	VR401 VR402	Adjust so the -1 dB segments light.
USE ter	TP501 (L ch), GND TP502 (R ch), GND	LC501 LC502	Adjust for -0.3 dB at 15 kHz and > 35 dB at 19 kHz.

2. SECONDARY DECK SECTION

Step		Alignment	Instrument Required	Input Signal	Mode	Test Point	Adjustment	For
1		Quick sensor	VTVM Black tape (SCC-502)		PB	TP859	VR853	Adjust VR853 so the voltage at the test point is 0.62V or higher when the leader tape is running and 200 mV or less in the middle of tape.
2		Azimuth	VTVM Oscilloscope Test tape (TCC-153)		PB	TP501 (L ch), GND TP502 (R ch), GND	Azimuth screw	Maximum output Refer to "Azimuth Adjustment" on page 6.
3		Tape speed (Hi-speed)	Frequency counter Test tape (MTT-111DN)		PB	TP501 (L ch), GND TP502 (R ch), GND	VR851	6020 Hz ±20 Hz (TP856 : GND connection) Adjust at the center of test tape.
4		Tape speed (Normal speed)	Frequency counter Test tape (MTT-111DN)		PB	TP501 (L ch), GND TP502 (R ch), GND	VR852	3010 Hz ±10 Hz Adjust at the center of test tape.
5		Playback output level	VTVM Test tape (TCC-130)		PB	TP501 (L ch), GND TP502 (R ch), GND	VR1101 (L ch) VR1102 (R ch)	775 mV Tape selector is Normal position. Adjust at Dolby NR off.
6		Playback frequency characteristic confirmation	VTVM Test tape (TCC-1216 or TCC-162C and TCC-262C)		PB	TP501 (L ch), GND TP502 (R ch), GND	VR1103 VR1104	Adjust VR1103 and VR1104 so the playback frequency response (1 kHz/18 kHz) is +0.6 ~ 0.7 dB. Refer to Fig. a.
7		Music Search	Oscilloscope Test tape (SCC-1425)		FORWARD SEARCH	TP601, GND	VR602	3.0 ±0.05V To be adjusted at the beginning of tape winding. 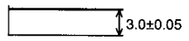
8		Blank Search	Oscilloscope Test tape (SCC-1425)		SEARCH PLAYBACK	TP601, GND	VR601	1.0V or higher To be measured at the low level part of SCC-1425 tape. 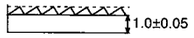
9		Bias frequency confirmation	Frequency counter Blank tape (SCC-565)		DUAL REC	TP101 (L ch), GND TP102 (R ch), GND	T301	105 kHz ±2 kHz Use METAL tape.
10		Bias trans.	Blank tape (SCC-565)		REC/PB	TP305, GND TP303, GND (L ch) TP304, GND (R ch)	T303 L303 L304	Connect the oscilloscope to TP305 and GND and adjust T303 so that the waveform is maximum. Connect the oscilloscope to TP303 and GND, TP304 and GND and adjust L303, L304 so that the DC voltage is minimum.
11		Bias trap	VTVM Blank tape (SCC-565)		REC/PB	TP203 (L ch), GND TP204 (R ch), GND	LC1201 LC1202	Minimum output. Use METAL tape. INPUT VR. minimum
12	1	Bias level (pre-adjustment)	VTVM Blank tapes METAL SCC-565 CrO_2 SCC-1360 Normal SCC-502		REC/PB	TP1101 (L ch), GND TP1102 (R ch), GND	VR311 VR312	35 mV Test tape is METAL blank tape. Short-circuit R708 and JP699, R707 and JP700.
	2						VR315 VR316	20 mV Test tape is CrO_2 blank tape. Short-circuit R708 and JP699, R707 and JP700.
	3						VR313 VR314	15 mV Test tape is Normal blank tape. Short-circuit R708 and JP699, R707 and JP700.
13		Record level (pre-adjustment)	VTVM Blank tapes METAL SCC-565 CrO_2 SCC-1360 Normal SCC-502	Apply 1 kHz signal to INPUT jack. Set INPUT LEVEL knob so that TP501 and TP502 to GND voltage is 775 mV in REC-PAUSE mode.	REC/PB	TP501 (L ch), GND TP502 (R ch), GND	VR1201, VR1202 VR311 VR312	775 mV Test tape is METAL tape. Adjust variable resistors so that the distortion becomes 0.9% – 1.2%. (Mini. distortion)
							VR315 VR316 (CrO_2)	775 mV Adjust variable resistors so that the distortion becomes 0.9% (CrO_2).
							VR313 VR314 (Normal)	Adjust variable resistors so that the distortion becomes 0.8% (Normal). This confirmation should be at each tape selector position.
14	1	Record/playback frequency characteristic	VTVM Blank tapes CrO_2 SCC-1360 METAL SCC-565 Normal SCC-502	Apply 1 kHz signal to INPUT jack. The output at TP501 and TP502 are Dolby level -25dB. Then adjust with a 20 Hz to 30 kHz sweep signal.	REC/PB	OUTPUT jack	VR315, VR316 LC1201, LC1202 (VR311, VR312)	So that the record/playback frequency resportion is flat (at least within the range in Fig. b.) Test tape is CrO_2 tape.
	2						VR311 VR312	So that the record/playback frequency resportion is flat (at least within the range in Fig. b.) Test tape is METAL tape.
	3						VR313, VR314 LC1201, LC1202 (VR311, VR312)	So that the record/playback frequency resportion is flat (at least within the range in Fig. b.) Test tape is Normal tape.
15		Record level	VTVM Blank tapes CrO_2 SCC-1360 METAL SCC-565 Normal SCC-502	Set INPUT LEVEL knob so that TP501 and TP502 to GND voltage is 775 mV (1 kHz) in REC-PAUSE mode.	REC/PB	TP501 (L ch), GND TP502 (R ch), GND	VR1201 VR1202	775 mV Perform adjustment using CrO_2. Perform checking only for Normal and METAL tapes.
16		Copy level	Test tape TCC-130 (Secondary) Blank tape SCC-1360 (Primary)		EDIT	OUTPUT	VR551 VR552	Perform edit copy and adjust VR551 and VR552 so that the copy output (PLAY output) of PRI DECK is 775 mV.
17		High speed copy frequency characteristic	VTVM Blank tapes CrO_2 SCC-1360 METAL SCC-565 Normal SCC-502 Test tape TCC-185C		High Speed Copy Play	OUTPUT	L203, L204	Load TCC-185C in SEC DECK and SCC-565 in PRI DECK and execute high-speed copying, then play the tape in the PRI DECK. Check that the frequency response of the 14 kHz signal is within ±3 dB of that of the 1 kHz signal. If this specification cannot be satisfied, adjust L203 and L204. After adjustment is confirmed, also use the SCC-502 and SCC-1360 tapes to check.
18		High speed copy frequency characteristic	VTVM Blank tapes CrO_2 SCC-1360 METAL SCC-565 Normal SCC-502 Test tape TCC-285C		High Speed Copy Play	OUTPUT	L203, L204	Load TCC-285C in SEC DECK and SCC-565 in PRI DECK and execute high-speed copying, then play the tape in the PRI DECK. Check that the frequency response of the 14 kHz signal is within ±3 dB of that of the 1 kHz signal. If this specification cannot be satisfied, adjust L203 and L204. After adjustment is confirmed, also use the SCC-502 and SCC-1360 tapes to check.
19		Meter level	VTVM	Apply 1 kHz signal to INPUT jack. Set INPUT LEVEL knob so that TP501 and TP502 to GND voltage is 1.5 dB below 775 mV.	REC/PAUSE	PEAK LEVEL METER	VR401 VR402	Adjust so the -1 dB segments light.
20		MPX filter characteristic confirmation	VTVM	Apply 19 kHz, 15 kHz and 1 kHz signal to INPUT jack. Set INPUT LEVEL knob so that TP501 and TP502 to GND voltage is 775mV.	REC/PAUSE MPX filter ON	TP501 (L ch), GND TP502 (R ch), GND	LC501 LC502	Adjust for -0.3 dB at 15 kHz and > 35 dB at 19 kHz.

2. SECONDARY DECK SECTION

Step	Alignment	Instrument Required	Input Signal	Mode	Tes
1	Quick sensor	VTVM Black tape (SCC-502)		PB	TP859
2	Azimuth	VTVM Oscilloscope Test tape (TCC-153)		PB	TP501 TP502
3	Tape speed (Hi-speed)	Frequency counter Test tape (MTT-111DN)		PB	TP501 TP502
4	Tape speed (Normal speed)	Frequency counter Test tape (MTT-111DN)		PB	TP501 TP502
5	Playback output level	VTVM Test tape (TCC-130)		PB	TP501 TP502
6	Playback frequency characteristic confirmation	VTVM Test tape (TCC-1216 or TCC-162C and TCC-262C)		PB	TP501 TP502
7	Music Search	Oscilloscope Test tape (SCC-1425)		FORWARD SEARCH	TP601
8	Blank Search	Oscilloscope Test tape (SCC-1425)		SEARCH PLAYBACK	TP601
9	Bias frequency confirmation	Frequency counter Blank tape (SCC-565)		DUAL REC	TP101 TP102
10	Bias trans.	Blank tape (SCC-565)		REC/PB	TP305 TP303 TP304
11	Bias trap	VTVM Blank tape (SCC-565)		REC/PB	TP203 TP204
12 (1, 2, 3)	Bias level (pre-adjustment)	VTVM Blank tapes METAL SCC-565 CrO_2 SCC-1360 Normal SCC-502		REC/PB	TP110 TP110
13	Record level (pre-adjustment)	VTVM Blank tapes METAL SCC-565 CrO_2 SCC-1360 Normal SCC-502	Apply 1 kHz signal to INPUT jack. Set INPUT LEVEL knob so that TP501 and TP502 to GND voltage is 775 mV in REC-PAUSE mode.	REC/PB	TP501 TP502
14 (1, 2, 3)	Record/playback frequency characteristic	VTVM Blank tapes CrO_2 SCC-1360 METAL SCC-565 Normal SCC-502	Apply 1 kHz signal to INPUT jack. The output at TP501 and TP502 are Dolby level -25dB. Then adjust with a 20 Hz to 30 kHz sweep signal.	REC/PB	OUTP
15	Record level	VTVM Blank tapes CrO_2 SCC-1360 METAL SCC-565 Normal SCC-502	Set INPUT LEVEL knob so that TP501 and TP502 to GND voltage is 775 mV (1 kHz) in REC-PAUSE mode.	REC/PB	TP501 TP502
16	Copy level	Test tape TCC-130 (Secondary) Blank tape SCC-1360 (Primary)		EDIT	OUTP
17	High speed copy frequency characteristic	VTVM Blank tapes CrO_2 SCC-1360 METAL SCC-565 Normal SCC-502 Test tape TCC-185C		High Speed Copy Play	OUTP
18	High speed copy frequency characteristic	VTVM Blank tapes CrO_2 SCC-1360 METAL SCC-565 Normal SCC-502 Test tape TCC-285C		High Speed Copy Play	OUTP
19	Meter level	VTVM	Apply 1 kHz signal to INPUT jack. Set INPUT LEVEL knob so that TP501 and TP502 to GND voltage is 1.5 dB below 775 mV.	REC/PAUSE	PEAK METE
20	MPX filter characteristic confirmation	VTVM	Apply 19 kHz, 15 kHz and 1 kHz signal to INPUT jack. Set INPUT LEVEL knob so that TP501 and TP502 to GND voltage is 775mV.	REC/PAUSE MPX filter ON	TP501 TP502

Mode	Test Point	Adjustment	For
PB	TP859	VR853	Adjust VR853 so the voltage at the test point is 0.62V or higher when the leader tape is running and 200 mV or less in the middle of tape.
PB	TP501 (L ch), GND TP502 (R ch), GND	Azimuth screw	Maximum output Refer to "Azimuth Adjustment" on page 6.
PB	TP501 (L ch), GND TP502 (R ch), GND	VR851	6020 Hz ±20 Hz (TP856 : GND connection) Adjust at the center of test tape.
PB	TP501 (L ch), GND TP502 (R ch), GND	VR852	3010 Hz ±10 Hz Adjust at the center of test tape.
PB	TP501 (L ch), GND TP502 (R ch), GND	VR1101 (L ch) VR1102 (R ch)	775 mV Tape selector is Normal position. Adjust at Dolby NR off.
PB	TP501 (L ch), GND TP502 (R ch), GND	VR1103 VR1104	Adjust VR1103 and VR1104 so the playback frequency response (1 kHz/18 kHz) is +0.6 ~ 0.7 dB. Refer to Fig. a.
FORWARD SEARCH	TP601, GND	VR602	3.0 ±0.05V To be adjusted at the beginning of tape winding. 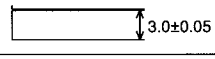
SEARCH PLAYBACK	TP601, GND	VR601	1.0V or higher To be measured at the low level part of SCC-1425 tape. 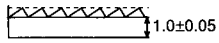
DUAL REC	TP101 (L ch), GND TP102 (R ch), GND	T301	105 kHz ±2 kHz Use METAL tape.
REC/PB	TP305, GND TP303, GND (L ch) TP304, GND (R ch)	T303 L303 L304	Connect the oscilloscope to TP305 and GND and adjust T303 so that the waveform is maximum. Connect the oscilloscope to TP303 and GND, TP304 and GND and adjust L303, L304 so that the DC voltage is minimum.
REC/PB	TP203 (L ch), GND TP204 (R ch), GND	LC1201 LC1202	Minimum output. Use METAL tape. INPUT VR. minimum
REC/PB	TP1101 (L ch), GND TP1102 (R ch), GND	VR311 VR312	35 mV Test tape is METAL blank tape. Short-circuit R708 and JP699, R707 and JP700.
		VR315 VR316	20 mV Test tape is CrO_2 blank tape. Short-circuit R708 and JP699, R707 and JP700.
		VR313 VR314	15 mV Test tape is Normal blank tape. Short-circuit R708 and JP699, R707 and JP700.
REC/PB	TP501 (L ch), GND TP502 (R ch), GND	VR1201, VR1202 VR311 VR312	775 mV Test tape is METAL tape. Adjust variable resistors so that the distortion becomes 0.9% – 1.2%. (Mini. distortion)
		VR315 VR316 (CrO_2)	775 mV Adjust variable resistors so that the distortion becomes 0.9% (CrO_2).
		VR313 VR314 (Normal)	Adjust variable resistors so that the distortion becomes 0.8% (Normal). This confirmation should be at each tape selector position.
REC/PB	OUTPUT jack	VR315, VR316 LC1201, LC1202 (VR311, VR312)	So that the record/playback frequency resportion is flat (at least within the range in Fig. b.) Test tape is CrO_2 tape.
		VR311 VR312	So that the record/playback frequency resportion is flat (at least within the range in Fig. b.) Test tape is METAL tape.
		VR313, VR314 LC1201, LC1202 (VR311, VR312)	So that the record/playback frequency resportion is flat (at least within the range in Fig. b.) Test tape is Normal tape.
REC/PB	TP501 (L ch), GND TP502 (R ch), GND	VR1201 VR1202	775 mV Perform adjustment using CrO_2. Perform checking only for Normal and METAL tapes.
EDIT	OUTPUT	VR551 VR552	Perform edit copy and adjust VR551 and VR552 so that the copy output (PLAY output) of PRI DECK is 775 mV.
High Speed Copy Play	OUTPUT	L203, L204	Load TCC-185C in SEC DECK and SCC-565 in PRI DECK and execute high-speed copying, then play the tape in the PRI DECK. Check that the frequency response of the 14 kHz signal is within ±3 dB of that of the 1 kHz signal. If this specification cannot be satisfied, adjust L203 and L204. After adjustment is confirmed, also use the SCC-502 and SCC-1360 tapes to check.
High Speed Copy Play	OUTPUT	L203, L204	Load TCC-285C in SEC DECK and SCC-565 in PRI DECK and execute high-speed copying, then play the tape in the PRI DECK. Check that the frequency response of the 14 kHz signal is within ±3 dB of that of the 1 kHz signal. If this specification cannot be satisfied, adjust L203 and L204. After adjustment is confirmed, also use the SCC-502 and SCC-1360 tapes to check.
REC/PAUSE	PEAK LEVEL METER	VR401 VR402	Adjust so the -1 dB segments light.
REC/PAUSE MPX filter ON	TP501 (L ch), GND TP502 (R ch), GND	LC501 LC502	Adjust for -0.3 dB at 15 kHz and > 35 dB at 19 kHz.

LEAD WIRES STYLING DIAGRAM

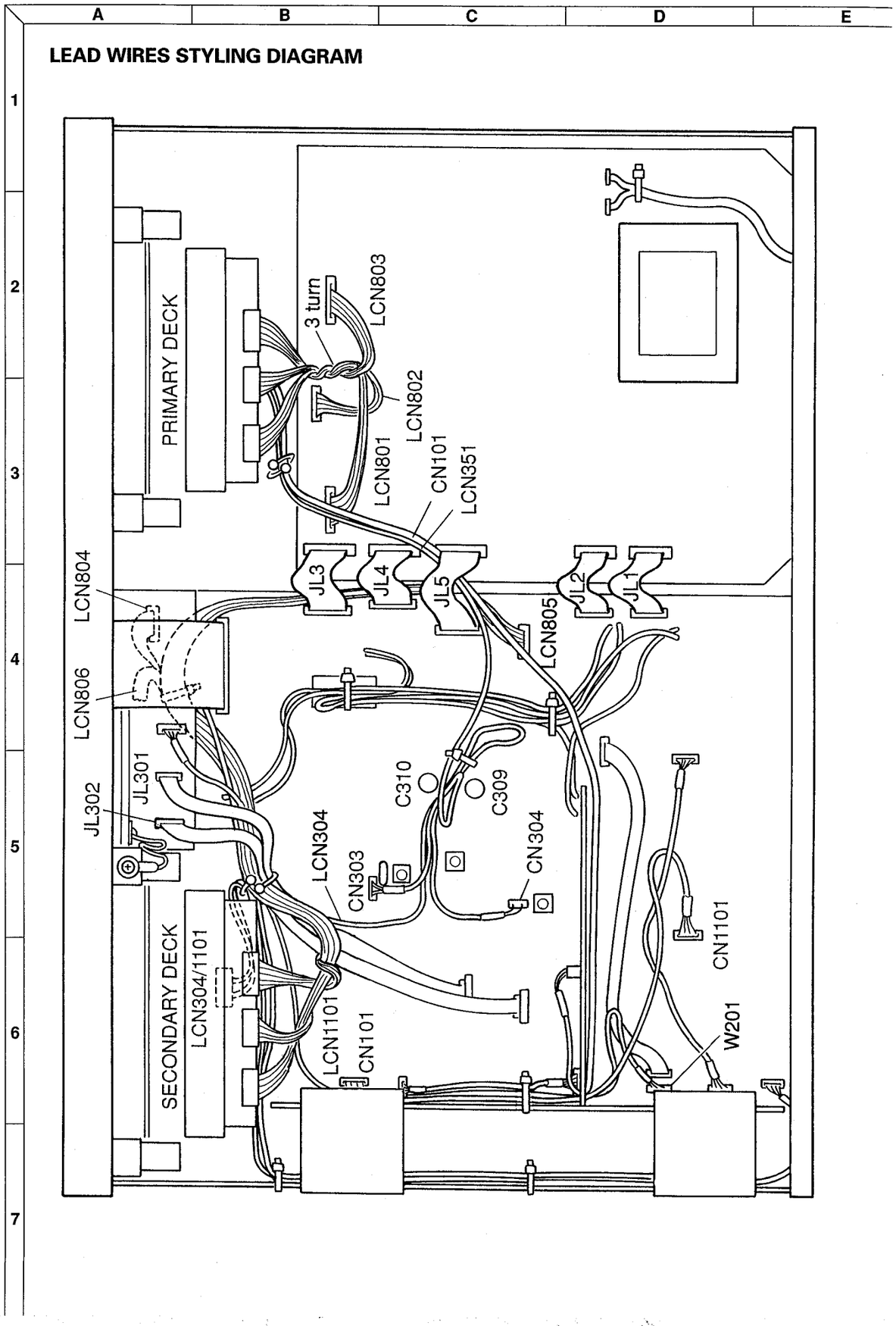

BLOCK DIAGRAM

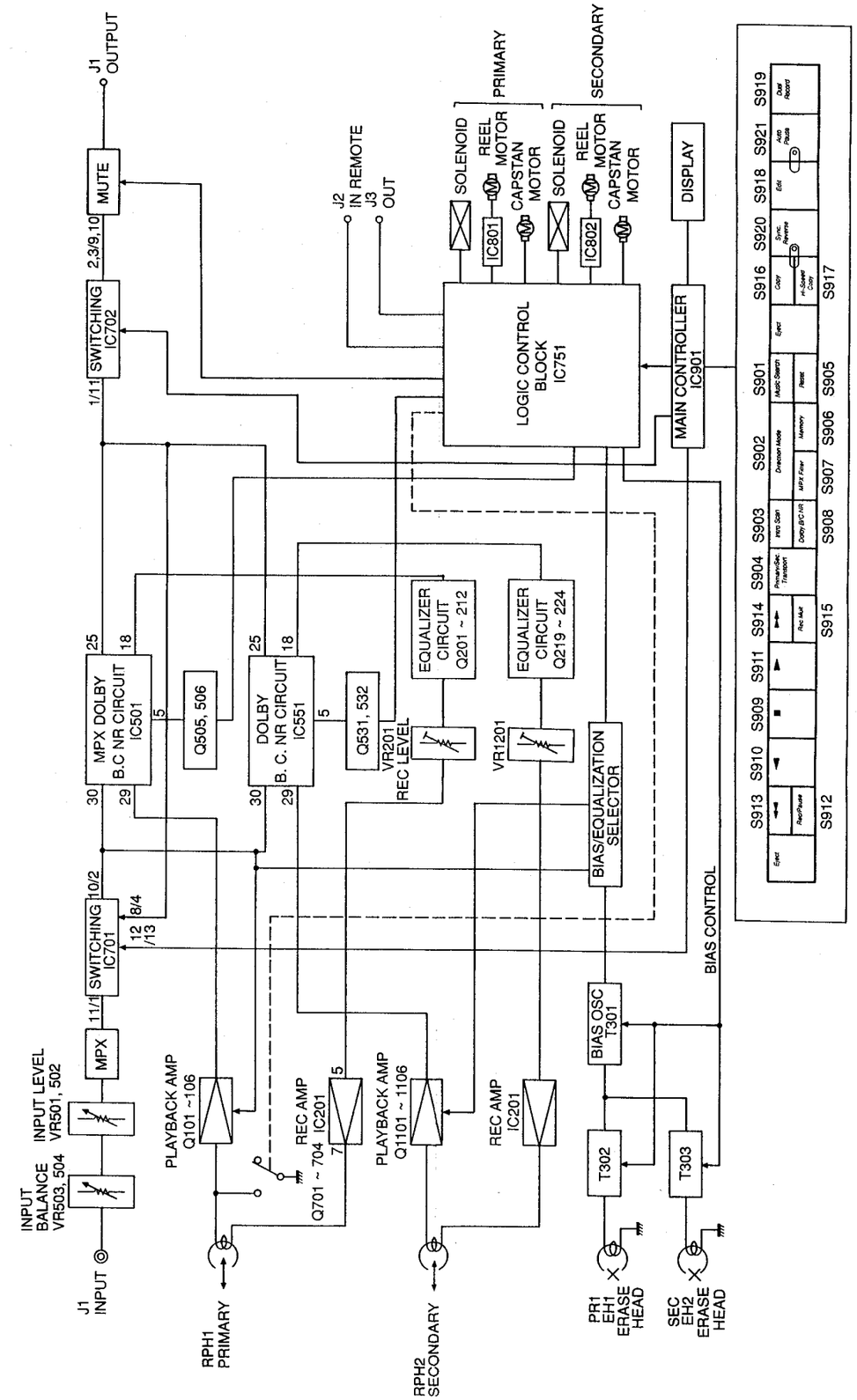

LEAD WIRES STYLING DIAGRAM

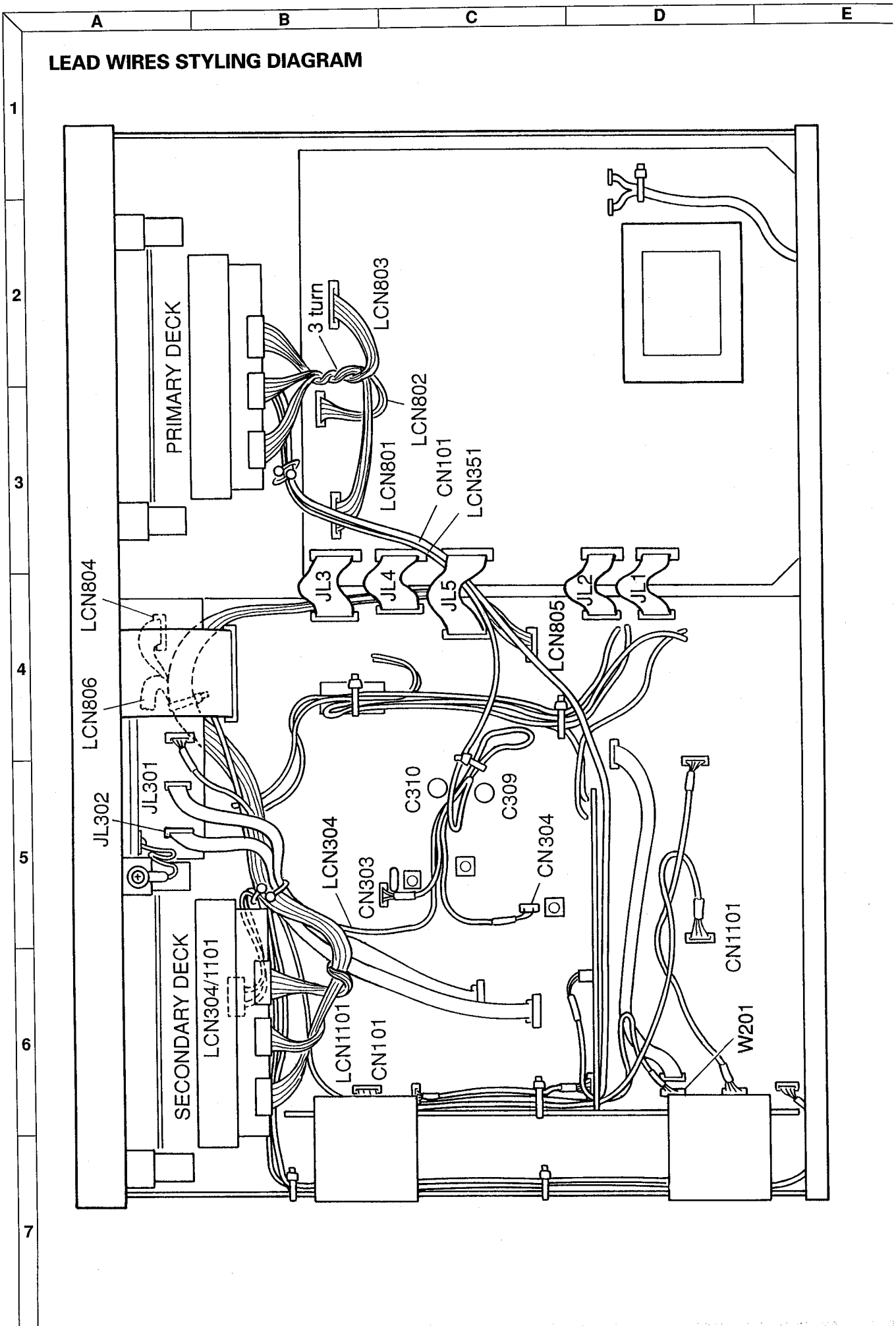

BLOCK DIAGRAM

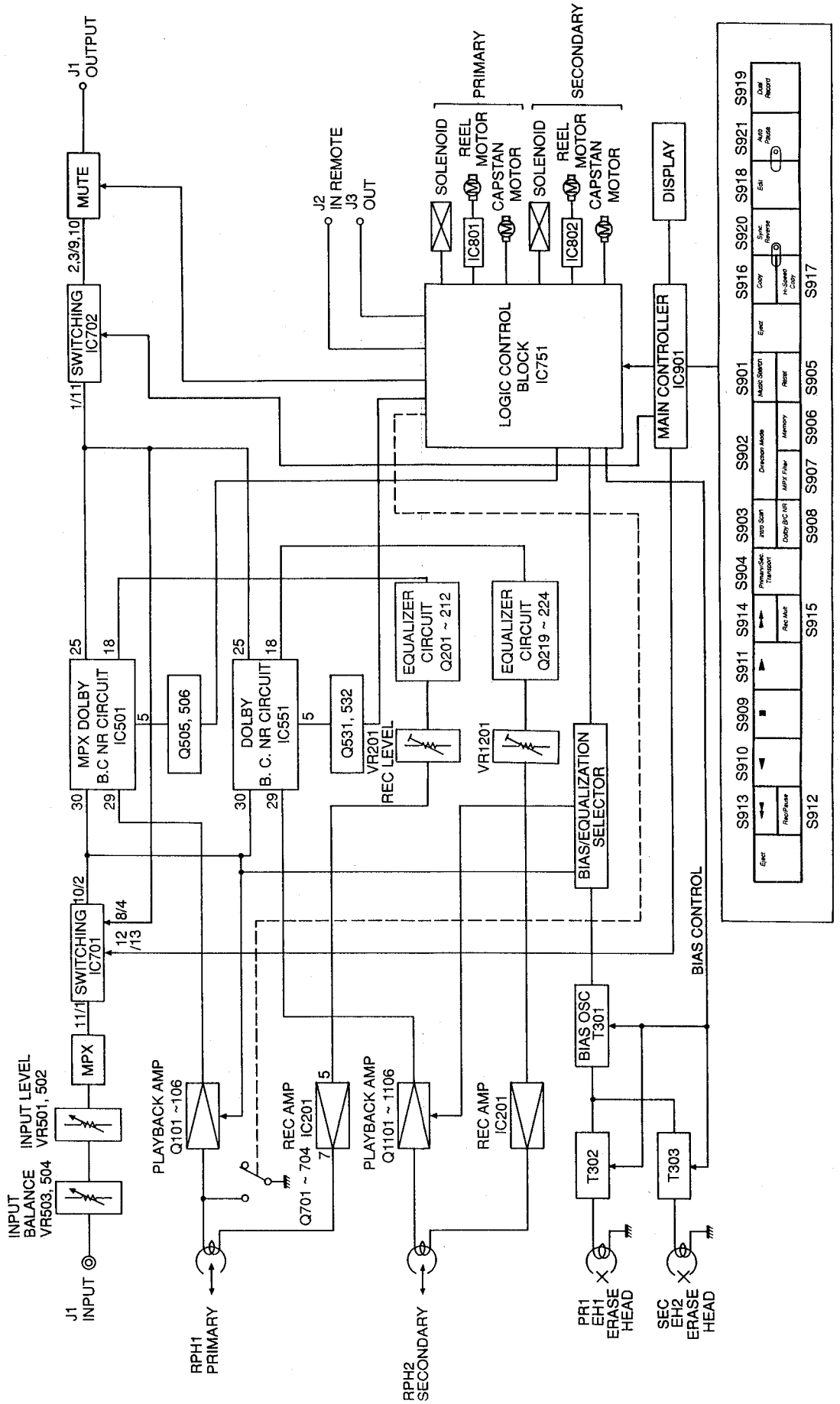

GENERAL UNIT
EXPLODED VIEW

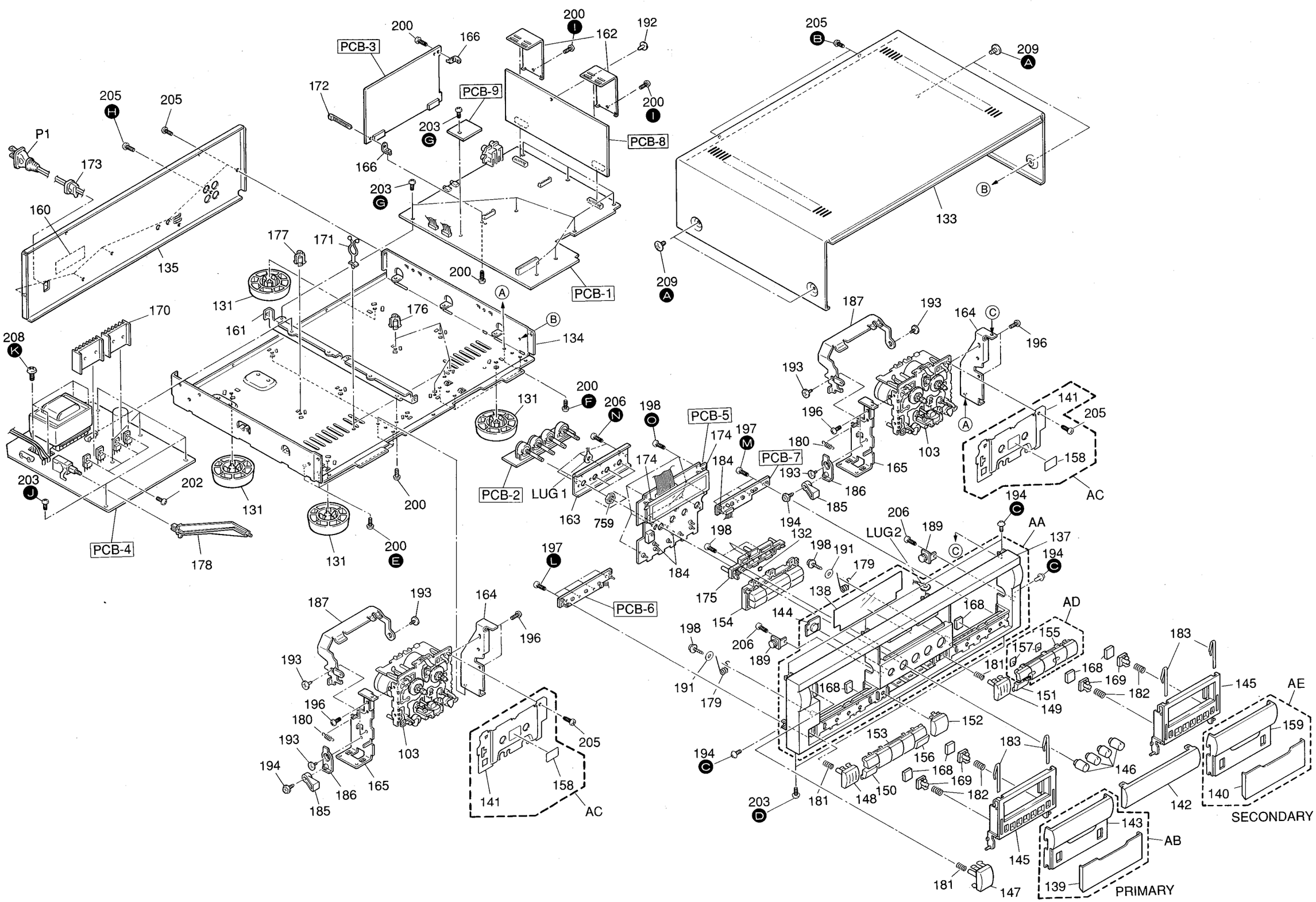

GENERAL UNIT
EXPLODED VIEW

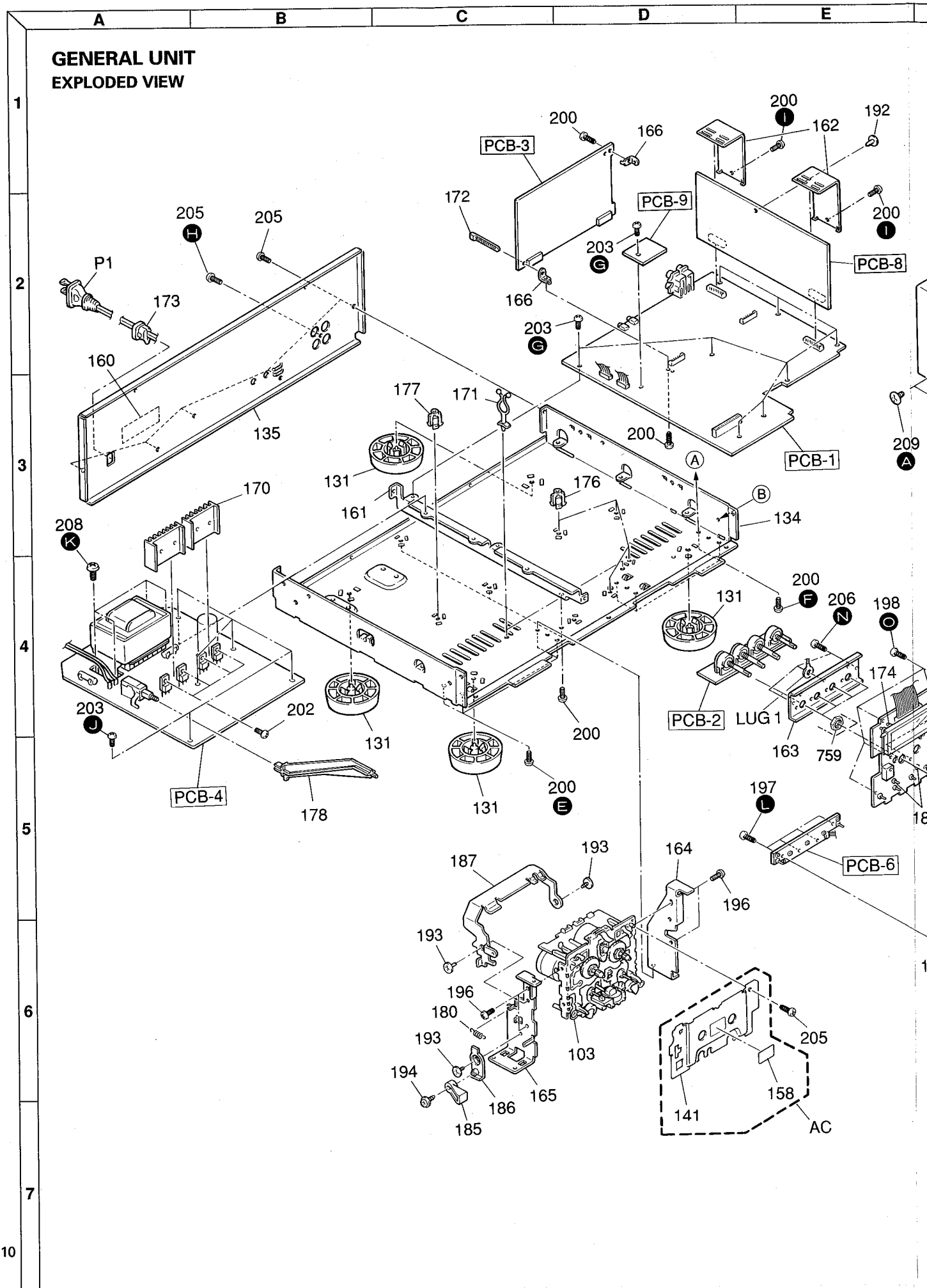

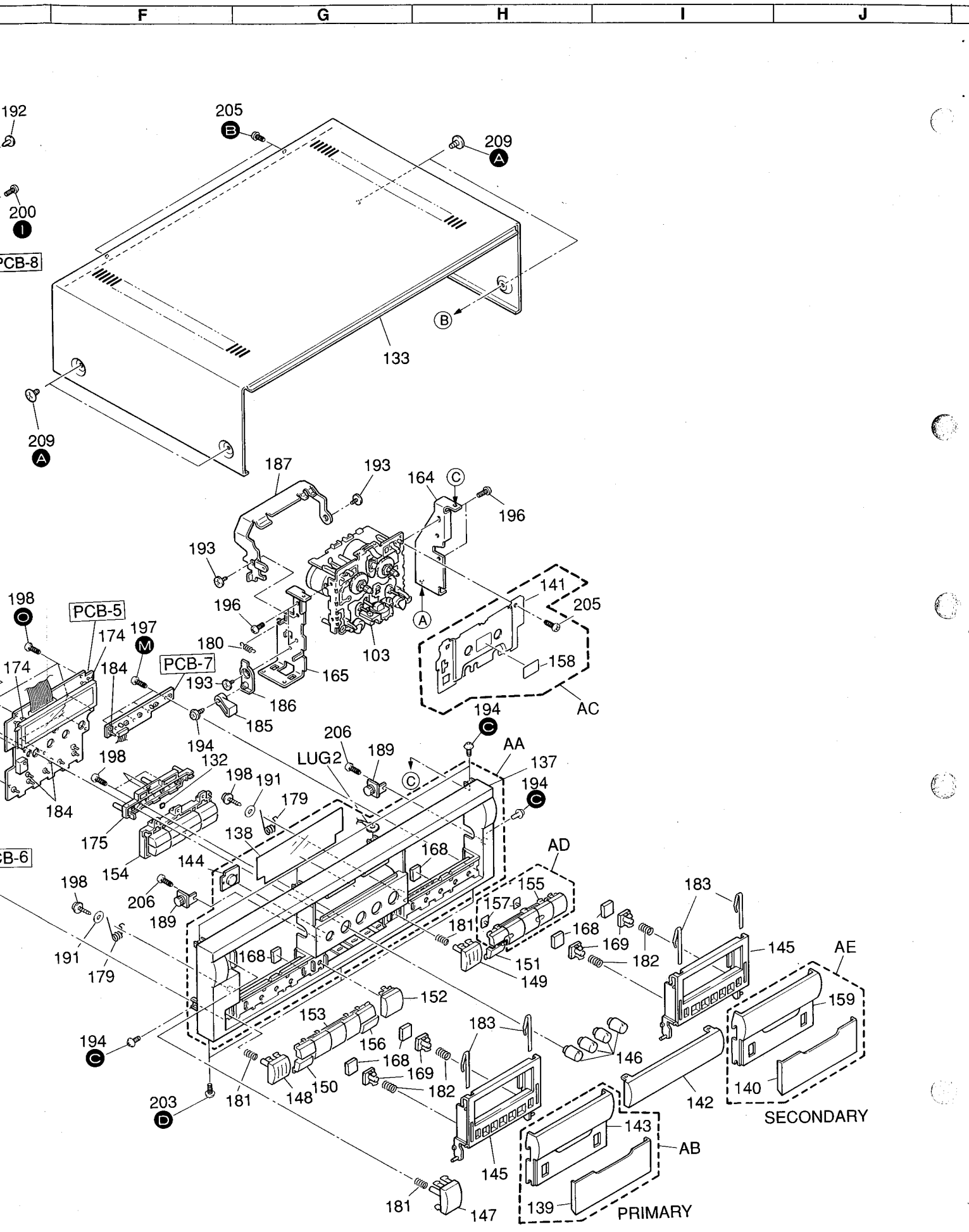
F
G
H
I
J
192
205
B
209
A
200
I
PCB-8
B
133
209
A
187
193
164
C
196
193
141
205
198
O
PCB-5
196
A
174
197
M
180
103
174
184
PCB-7
165
158
193
186
AC
185
194
C
194
206
AA
198
132
LUG2
189
137
198
191
C
194
C
184
179
175
138
168
AD
CB-6
144
154
155
198
206
183
157
189
181
168
169
145
AE
191
168
151
182
179
149
152
159
153
183
194
C
156
146
168
169
150
182
148
142
203
D
181
140
SECONDARY
143
AB
145
181
147
139
PRIMARY

GENERAL UNIT PARTS LIST

Ref. No.	Part No.	Description
AA	A442-DC5700B	FRONT PANEL ASSEMBLY
AB	A532-DC5700B	WINDOW ASSEMBLY (PRI)
AC	A514-DC5700A	PLATE ASSEMBLY, MECHA
AD	A662-DC5700B	PUSH BUTTON ASSEMBLY
AE	A532-DC5700E	WINDOW ASSEMBLY (SEC)
103	3112-15905	MECHA ASSEMBLY, PRI AND SEC (REC/PLAY) (x2)
131	1319-03301	LEG (x4)
132	1751-19702	LABEL
133	1414-16701	TOP COVER
134	1424-34201	CABINET BOTTOM
135	1424-34303	CABI BACK BK
135	1424-34306	CABI BACK IB
137	1442-26803	PANEL, FRONT
138	1511-22101	PANEL, DISPLAY
139	1512-07507	PLATE, CASS. LID (PRI)
140	1512-07502	PLATE, CASS. LID (SEC)
141	1514-23501	PLATE, MECHA (x2)
142	1532-20901	WINDOW, DISPLAY
143	1532-21001	WINDOW, CASS. LID (PRI)
144	1532-21101	WINDOW, REMOTE
145	1612-07801	CASS LID (x2)
146	1632-20401	ROTARY KNOB (x4)
147	1662-58401	PUSH BUTTON, POWER
148	1662-65001	PUSH BUTTON, EJECT L
149	1662-65101	PUSH BUTTON, EJECT R
150	1662-65201	PUSH BUTTON, REC/PAUSE
151	1662-65301	PUSH BUTTON, HIGH SPEED COPY
152	1662-65401	PUSH BUTTON, TRANSPORT
153	1662-65501	PUSH BUTTON, CASS. L
154	1662-65801	PUSH BUTTON, CENTER
155	1662-66001	PUSH BUTTON, CASS. R
156	1662-66301	PUSH BUTTON, REC MUTE
157	1732-08201	INDICATOR (x2)
158	1741-01601	ORNAMENT (x2)
159	1532-21001	WINDOW, CASS. LID (SEC)
160	1756-CSA	LABEL BK
161	2219-8293	METAL FITTG, CENTER PCB
162	2219-8323	METAL FITTG, DOLBY PCB (x2)
163	2219-8324	METAL FITTG, VR HOLD
164	2219-8325	METAL FITTG, MECHA R (x2)
165	2219-8326	METAL FITTG, MECHA L (x2)
166	2219-8345	METAL FITTG, DOLBY PCB (x2)
168	2114-87143	BUSHING (x6)
169	2240-7371	HOLDER (x4)
170	2222-7281	HEAT SINK (x2)
171	2240-7050	HOLDER (x2)
172	2240-R0101	HOLDER (x9)
173	2240-364	HOLDER, AC CORD
174	2240-7387	HOLDER, FL (x2)
175	2240-7391	HOLDER, VR HOLD
176	2360-7022	BOSS, SPE (x4)
177	2360-7063	BOSS, SPE
178	2601-7199	SHAFT
179	2651-059	SPRING, LID EJECT (x2)
180	2651-11212	SPRING, LEVER (x2)
181	2651-2101732	SPRING (x3)
182	2651-2101735	SPRING (x4)
183	2652-105	LEAF SPRING (x4)
184	2132-413	SPACER (x3)
185	2672-7051	LEVER (x2)
186	2672-7052	LEVER (x2)
187	2672-7053	LEVER (x2)
189	2692-015	DAMPER (x2)
191	2401-0216	WASHER, METAL (x2)
192	2459-3004511	RIVET, PLASTIC
193	2320-044	SCREW, SPE+ (x6)
194	2340-7009	SCREW, SPE T+ (x8)
196	2347-260527	SCREW, BND T+ (2.6x5mm) (x8)
197	2347-260626	SCREW, BND T+ (2.6x6mm) (x8)
198	2347-R0126122	SCREW, BND T+ (2.6x12mm) (x13)
200	2347-R0130062	SCREW, BND T+ (3x6mm) (x15)
202	2347-R0130082	SCREW, BND T+ (3x8mm) (x4)
203	2347-R0130082	SCREW, BND T+ (3x8mm) (x17)
205	2347-R0130084	SCREW, BND T+ (3x8mm) (x10)
206	2347-R0130122	SCREW, BND T+ (3x12mm) (x5)
208	2347-R0140062	SCREW, BND T+ (4x6mm) (x4)
209	2347-R0140064	SCREW, BND T+ (4x6mm) (x4)
759	2440-62	SPECIAL NUT (x4)
⚠ P1	4161-71151	CORD W/PLUG BK
⚠ P1	4161-7256	CORD W/PLUG IB

NOTE:
⚠ SAFETY RELATED COMPONENT. USE ONLY EXACT REPLACEMENT PART AS SPECIFIED.

CASSETTE TAPE RECORDER MECHANISM
EXPLODED VIEW

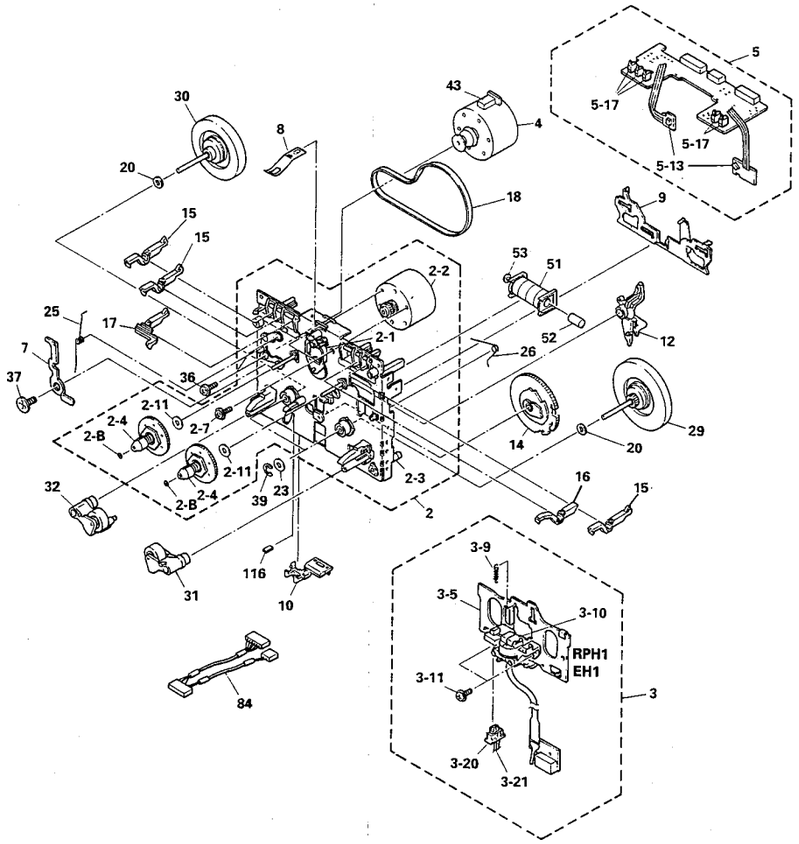

PARTS LIST

Ref. No.	Part No.	Description
2	F511-496	XPORT CHASSIS (EXCL HEAD)
2-1	F517-049	IDLER BLK
2-2	F564-280	MTR REEL BLK
2-3	F612-168	CHASSIS BASE BLK
2-4	F623-037	REEL BASE BLK
2-7	FG156-11A	SCREW 2.6×6.4 ZN
2-8	FJ111-17	WASHER 1.7×0.25
2-11	UJ12V-11	WASHER 2.1×0.25T
3	F513-538	PLATE HD BLK
3-5	FC52E-36	HEAD BASE
3-9	FK26N-14	HB SP
3-10	FU18D-61	HADKH5725B R/P HEAD
3-11	UG19D-11	SCREW TT 2.0×5 ZN
3-20	AZ13P-00	SPI-320BC
3-21	WG50M-03A	QS LEAD WIRE
4	F525-256	MTR MAIN BLK
5	F567-404	PCB CONTROL BLK
5-1	F743-065	PCB BASE BLK
5-13	AZ15S-00	GP2S04B
5-17	UE16E-11	PUSH SWITCH
7	FC39L-70	EJECT PREVENTION ARM(L)
8	FC52H-12	SPRING CASSETTE
9	FC52F-15	SLIDE PLATE
10	FD45H-15	LEAD HOLDER
12	FD45G-12	PLAY ARM
14	FD45B-15	CAM GEAR (3R)
15	FD44T-14	SWITCH ARM, REC
16	FD44Y-12	SWITCH ARM(R), PACK
17	FD44V-12	SWITCH ARM(L), METAL
18	FF17G-21, 31	MAIN BELT
20	FJ111-30	WASHER 2.6×0.25
23	FJ111-14	WASHER 2.6×0.5
25	FK28M-15	EJECT PREVENTION SPRING (L)
26	FK28R-11	SLIDE SPRING
29	FR23B-11	FLYWHEEL ASS'Y (ZDC)
30	FR22K-13	FLYWHEEL ASS'Y (RVS)
31	FR20L-21A	PINCH ROLLER ASS'Y(R)
32	FR20M-22	PINCH ROLLER ASS'Y(L)
36	FG114-14	SCREW 2.6×5 ZN
37	UG15S-11A	SCREW
39	UG13U-15	E RING
43	FF17C-12	HOLDER CUSHION(L)
51	F765-263	SOLENOID BLK
52	FL39H-12A	FIXED BAR
53	FL39K-12	PLANGER
84	WH52P-66	WIRE CONNECTOR (R/P)
116	UT11R-11	REFLECTION PLATE

GENERAL UNIT PARTS LIST

Ref. No.	Part No.	Description
AA	A442-DC5700B	FRONT PANEL ASSEMBLY
AB	A532-DC5700B	WINDOW ASSEMBLY (PRI)
AC	A514-DC5700A	PLATE ASSEMBLY, MECHA
AD	A662-DC5700B	PUSH BUTTON ASSEMBLY
AE	A532-DC5700E	WINDOW ASSEMBLY (SEC)
103	3112-15905	MECHA ASSEMBLY, PRI AND SEC (REC/PLAY) (x2)
131	1319-03301	LEG (x4)
132	1751-19702	LABEL
133	1414-16701	TOP COVER
134	1424-34201	CABINET BOTTOM
135	1424-34303	CABI BACK BK
135	1424-34306	CABI BACK IB
137	1442-26803	PANEL, FRONT
138	1511-22101	PANEL, DISPLAY
139	1512-07507	PLATE, CASS. LID (PRI)
140	1512-07502	PLATE, CASS. LID (SEC)
141	1514-23501	PLATE, MECHA (x2)
142	1532-20901	WINDOW, DISPLAY
143	1532-21001	WINDOW, CASS. LID (PRI)
144	1532-21101	WINDOW, REMOTE
145	1612-07801	CASS LID (x2)
146	1632-20401	ROTARY KNOB (x4)
147	1662-58401	PUSH BUTTON, POWER
148	1662-65001	PUSH BUTTON, EJECT L
149	1662-65101	PUSH BUTTON, EJECT R
150	1662-65201	PUSH BUTTON, REC/PAUSE
151	1662-65301	PUSH BUTTON, HIGH SPEED COPY
152	1662-65401	PUSH BUTTON, TRANSPORT
153	1662-65501	PUSH BUTTON, CASS. L
154	1662-65801	PUSH BUTTON, CENTER
155	1662-66001	PUSH BUTTON, CASS. R
156	1662-66301	PUSH BUTTON, REC MUTE
157	1732-08201	INDICATOR (x2)
158	1741-01601	ORNAMENT (x2)
159	1532-21001	WINDOW, CASS. LID (SEC)
160	1756-CSA	LABEL BK
161	2219-8293	METAL FITTG, CENTER PCB
162	2219-8323	METAL FITTG, DOLBY PCB (x2)
163	2219-8324	METAL FITTG, VR HOLD
164	2219-8325	METAL FITTG, MECHA R (x2)
165	2219-8326	METAL FITTG, MECHA L (x2)
166	2219-8345	METAL FITTG, DOLBY PCB (x2)
168	2114-87143	BUSHING (x6)
169	2240-7371	HOLDER (x4)
170	2222-7281	HEAT SINK (x2)
171	2240-7050	HOLDER (x2)
172	2240-R0101	HOLDER (x9)
173	2240-364	HOLDER, AC CORD
174	2240-7387	HOLDER, FL (x2)
175	2240-7391	HOLDER, VR HOLD
176	2360-7022	BOSS, SPE (x4)
177	2360-7063	BOSS, SPE
178	2601-7199	SHAFT
179	2651-059	SPRING, LID EJECT (x2)
180	2651-11212	SPRING, LEVER (x2)
181	2651-2101732	SPRING (x3)
182	2651-2101735	SPRING (x4)
183	2652-105	LEAF SPRING (x4)
184	2132-413	SPACER (x3)
185	2672-7051	LEVER (x2)
186	2672-7052	LEVER (x2)
187	2672-7053	LEVER (x2)
189	2692-015	DAMPER (x2)
191	2401-0216	WASHER, METAL (x2)
192	2459-3004511	RIVET, PLASTIC
193	2320-044	SCREW, SPE+ (x6)
194	2340-7009	SCREW, SPE T+ (x8)
196	2347-260527	SCREW, BND T+ (2.6x5mm) (x8)
197	2347-260626	SCREW, BND T+ (2.6x6mm) (x8)
198	2347-R0126122	SCREW, BND T+ (2.6x12mm) (x13)
200	2347-R0130062	SCREW, BND T+ (3x6mm) (x15)
202	2347-R0130082	SCREW, BND T+ (3x8mm) (x4)
203	2347-R0130082	SCREW, BND T+ (3x8mm) (x17)
205	2347-R0130084	SCREW, BND T+ (3x8mm) (x10)
206	2347-R0130122	SCREW, BND T+ (3x12mm) (x5)
208	2347-R0140062	SCREW, BND T+ (4x6mm) (x4)
209	2347-R0140064	SCREW, BND T+ (4x6mm) (x4)
759	2440-62	SPECIAL NUT (x4)
⚠ P1	4161-71151	CORD W/PLUG BK
⚠ P1	4161-7256	CORD W/PLUG IB

NOTE:

⚠ SAFETY RELATED COMPONENT. USE ONLY EXACT REPLACEMENT PART AS SPECIFIED.

CASSETTE TAPE RECORDER MECHANISM

EXPLODED VIEW

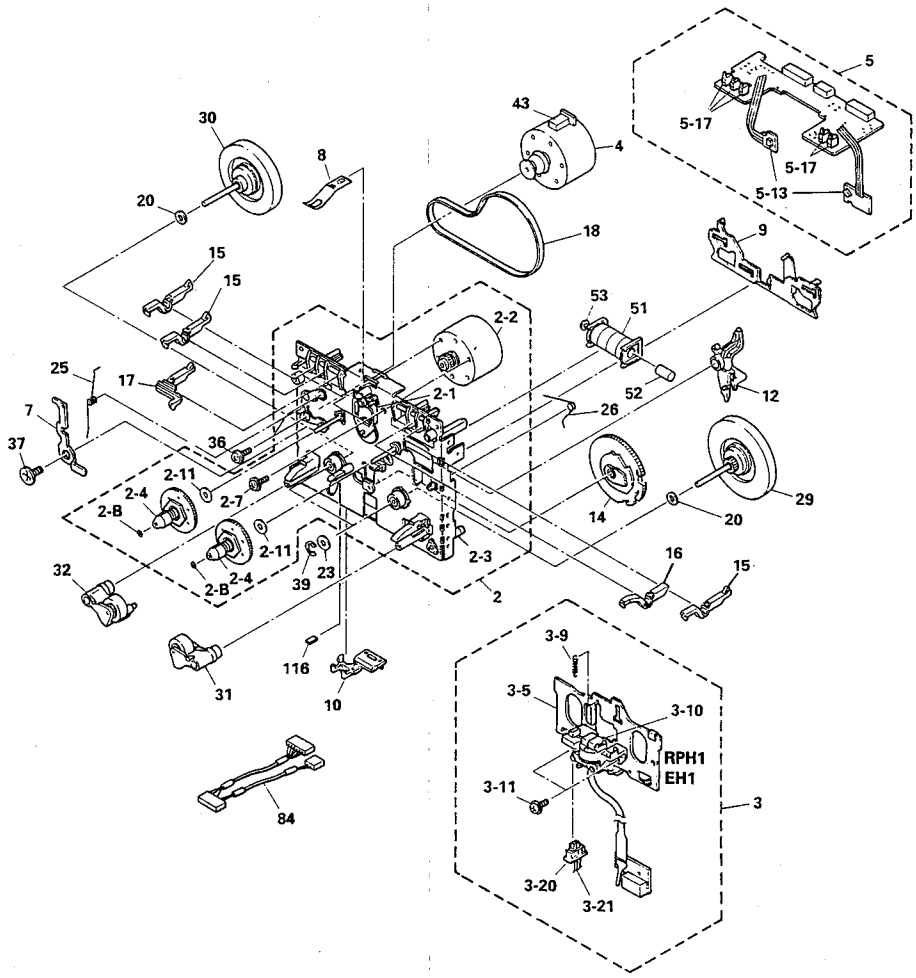

PARTS LIST

Ref. No.	Part No.	Description	Ref. No.	Part No.	Description
2	F511-496	XPORT CHASSIS (EXCL HEAD)	12	FD45G-12	PLAY ARM
2-1	F517-049	IDLER BLK	14	FD45B-15	CAM GEAR (3R)
2-2	F564-280	MTR REEL BLK	15	FD44T-14	SWITCH ARM, REC
2-3	F612-168	CHASSIS BASE BLK	16	FD44Y-12	SWITCH ARM(R), PACK
2-4	F623-037	REEL BASE BLK	17	FD44V-12	SWITCH ARM(L), METAL
2-7	FG156-11A	SCREW 2.6×6.4 ZN	18	FF17G-21, 31	MAIN BELT
2-8	FJ111-17	WASHER 1.7×0.25	20	FJ111-30	WASHER 2.6×0.25
2-11	UJ12V-11	WASHER 2.1×0.25T	23	FJ111-14	WASHER 2.6×0.5
3	F513-538	PLATE HD BLK	25	FK28M-15	EJECT PREVENTION SPRING (L)
3-5	FC52E-36	HEAD BASE	26	FK28R-11	SLIDE SPRING
3-9	FK26N-14	HB SP	29	FR23B-11	FLYWHEEL ASS'Y (ZDC)
3-10	FU18D-61	HADKH5725B R/P HEAD	30	FR22K-13	FLYWHEEL ASS'Y (RVS)
3-11	UG19D-11	SCREW TT 2.0×5 ZN	31	FR20L-21A	PINCH ROLLER ASS'Y(R)
3-20	AZ13P-00	SPI-320BC	32	FR20M-22	PINCH ROLLER ASS'Y(L)
3-21	WG50M-03A	QS LEAD WIRE	36	FG114-14	SCREW 2.6×5 ZN
4	F525-256	MTR MAIN BLK	37	UG15S-11A	SCREW
5	F567-404	PCB CONTROL BLK	39	UG13U-15	E RING
5-1	F743-065	PCB BASE BLK	43	FF17C-12	HOLDER CUSHION(L)
5-13	AZ15S-00	GP2S04B	51	F765-263	SOLENOID BLK
5-17	UE16E-11	PUSH SWITCH	52	FL39H-12A	FIXED BAR
7	FC39L-70	EJECT PREVENTION ARM(L)	53	FL39K-12	PLANGER
8	FC52H-12	SPRING CASSETTE	84	WH52P-66	WIRE CONNECTOR (R/P)
9	FC52F-15	SLIDE PLATE	116	UT11R-11	REFLECTION PLATE
10	FD45H-15	LEAD HOLDER			

WIRING DIAGRAM

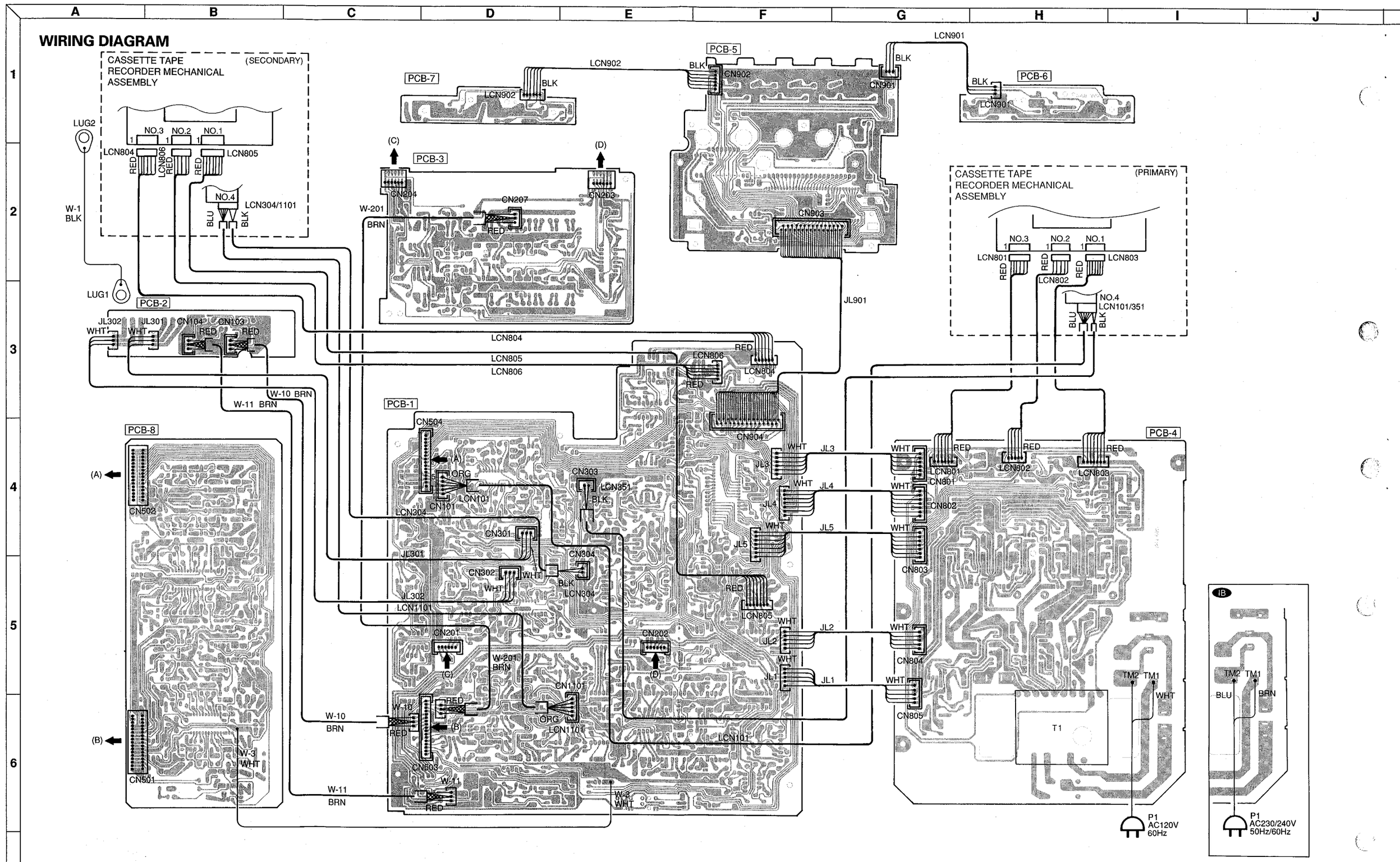

WIRE COLOR ABBREVIATIONS

REC : Red	YEL : Yellow
ORG : Orange	PUP : Purple
BLU : Blue	PIK : Pink
WHT : White	BRN : Brown
BLK : Black	

WIRING DIAGRAM

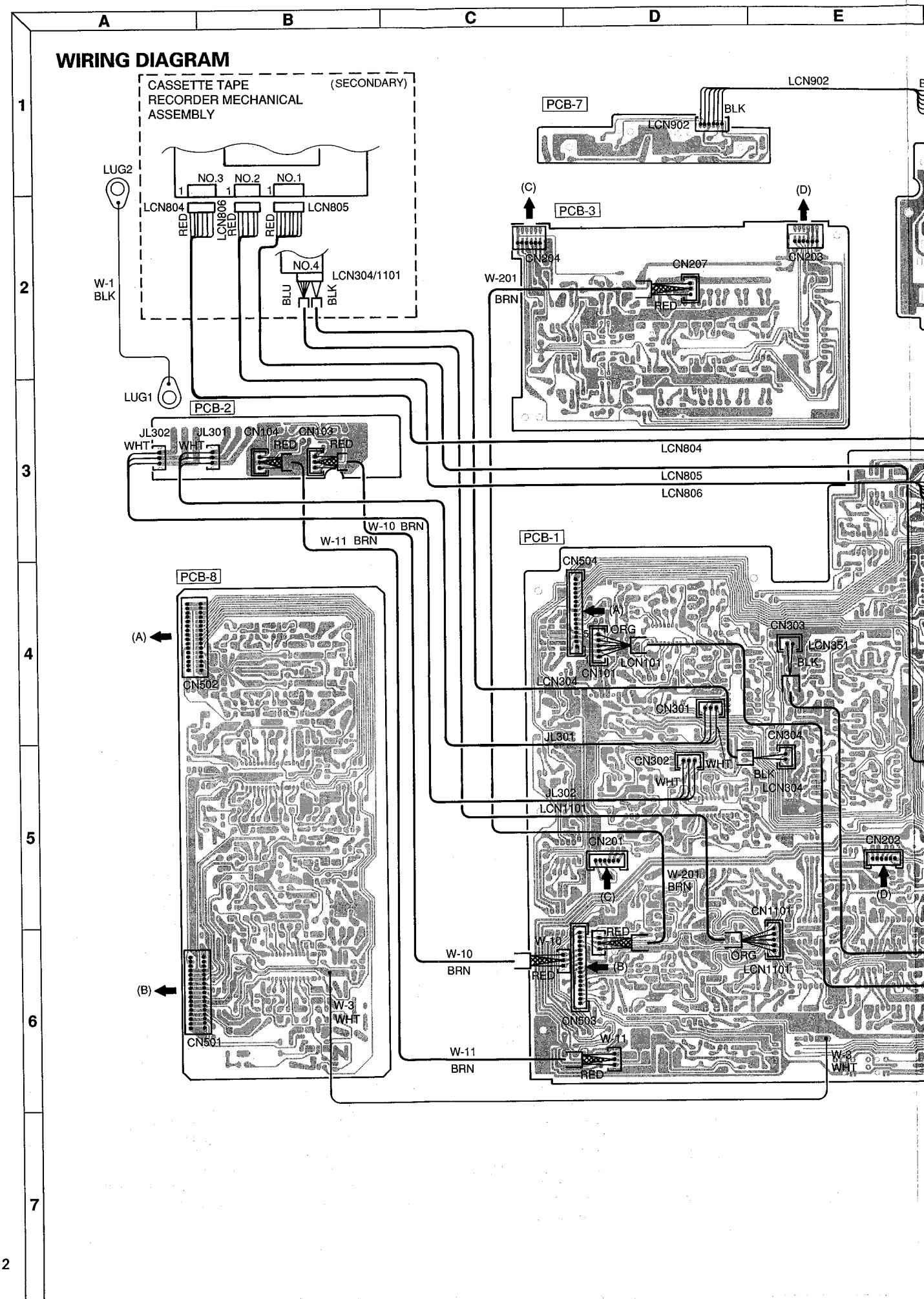

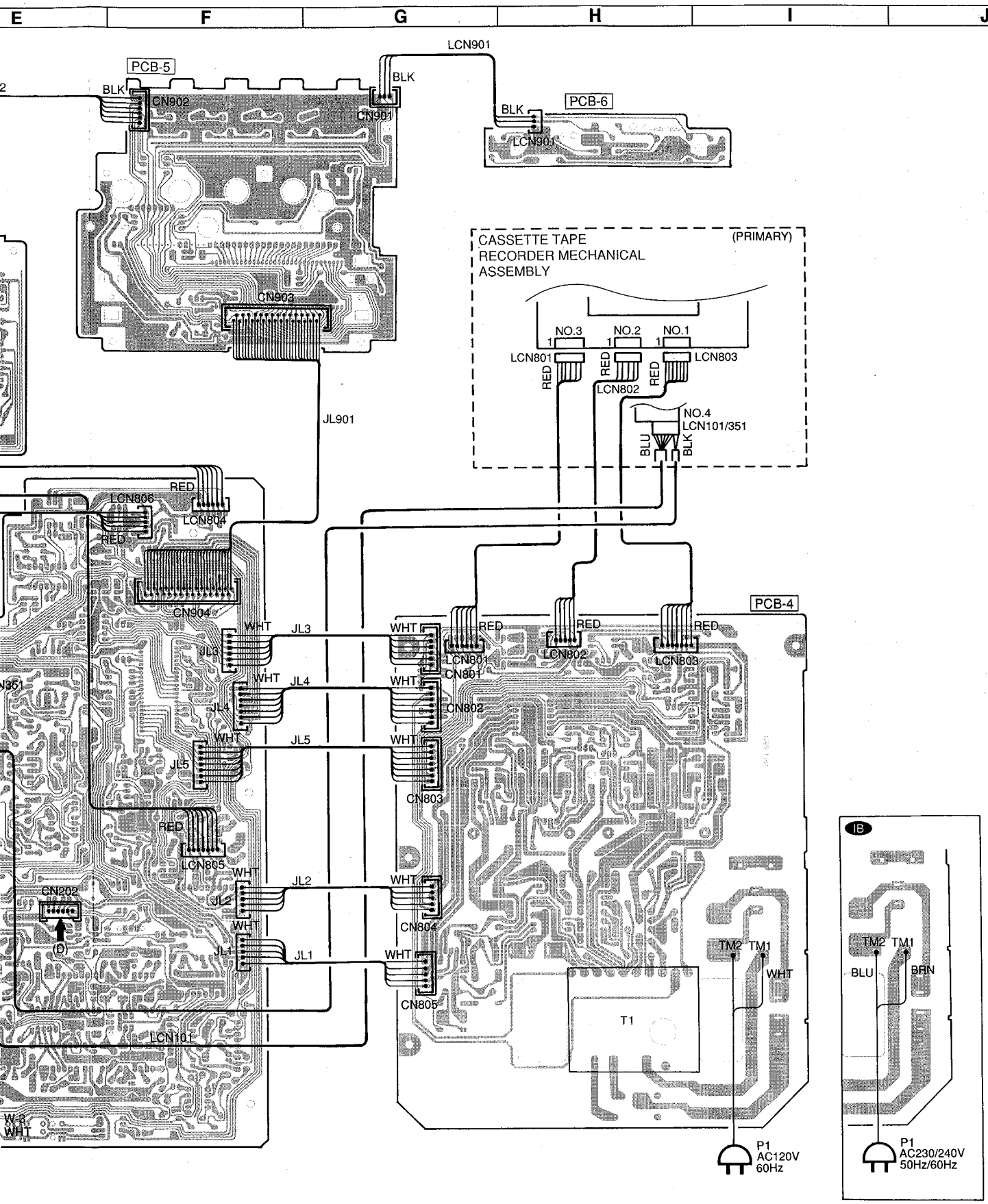

WIRE COLOR ABBREVIATIONS

REC : Red	YEL : Yellow
ORG : Orange	PUP : Purple
BLU : Blue	PIK : Pink
WHT : White	BRN : Brown
BLK : Black	

P. C. BOARD (1)

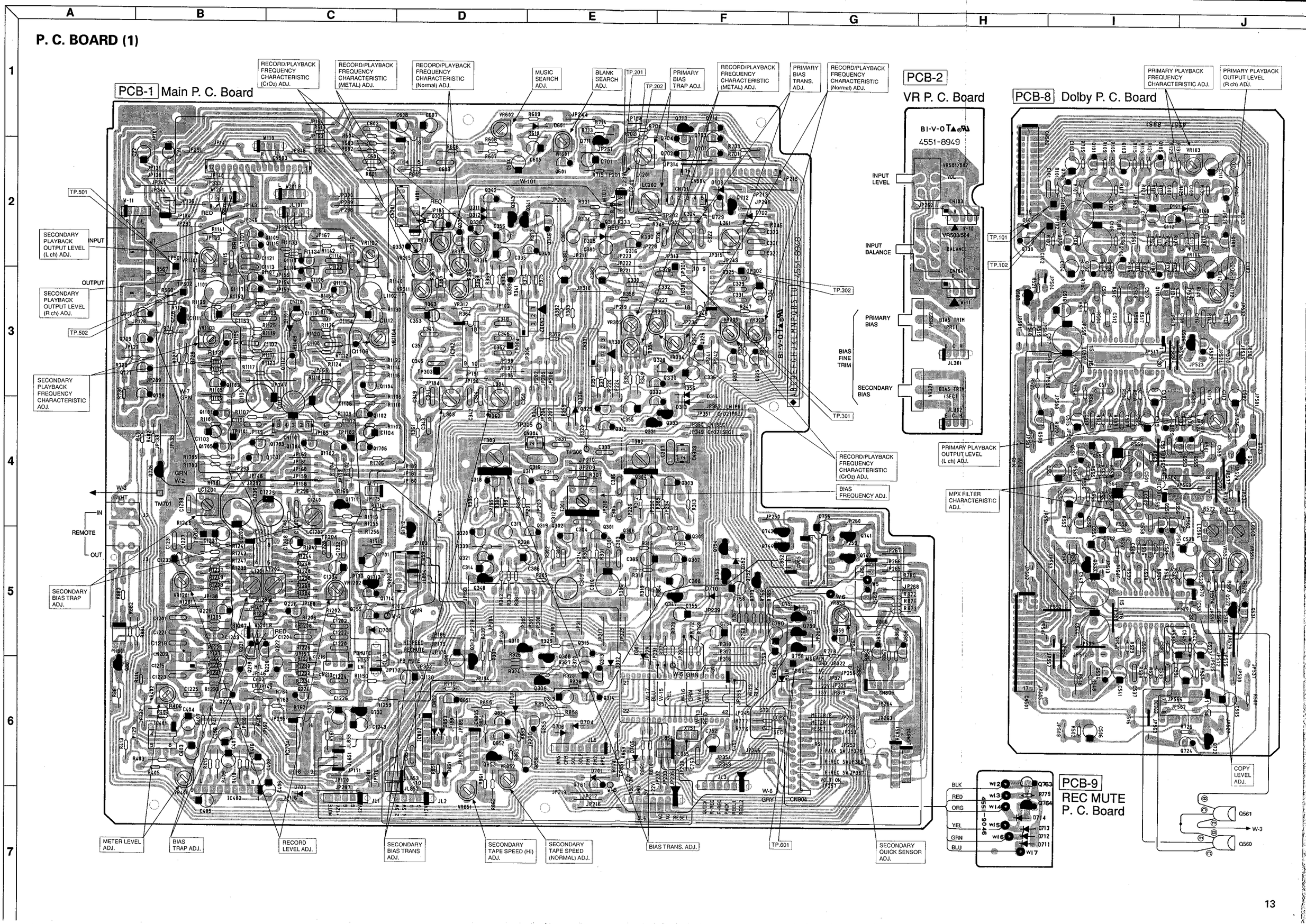
PCB-1 Main P. C. Board
RECORD/PLAYBACK FREQUENCY CHARACTERISTIC (CrO2) ADJ.
RECORD/PLAYBACK FREQUENCY CHARACTERISTIC (METAL) ADJ.
RECORD/PLAYBACK FREQUENCY CHARACTERISTIC (Normal) ADJ.
MUSIC SEARCH ADJ.
BLANK SEARCH ADJ.
TP.201
TP.202
PRIMARY BIAS TRAP ADJ.
RECORD/PLAYBACK FREQUENCY CHARACTERISTIC (METAL) ADJ.
PRIMARY BIAS TRANS. ADJ.
RECORD/PLAYBACK FREQUENCY CHARACTERISTIC (Normal) ADJ.
TP.501
SECONDARY PLAYBACK OUTPUT LEVEL (L ch) ADJ.
INPUT
OUTPUT
SECONDARY PLAYBACK OUTPUT LEVEL (R ch) ADJ.
TP.502
SECONDARY PLAYBACK FREQUENCY CHARACTERISTIC ADJ.
IN
REMOTE
OUT
SECONDARY BIAS TRAP ADJ.
TP.302
TP.301
RECORD/PLAYBACK FREQUENCY CHARACTERISTIC (CrO2) ADJ.
BIAS FREQUENCY ADJ.
METER LEVEL ADJ.
BIAS TRAP ADJ.
RECORD LEVEL ADJ.
SECONDARY BIAS TRANS ADJ.
SECONDARY TAPE SPEED (HI) ADJ.
SECONDARY TAPE SPEED (NORMAL) ADJ.
BIAS TRANS. ADJ.
TP.601
SECONDARY QUICK SENSOR ADJ.
PCB-2
VR P. C. Board
INPUT LEVEL
INPUT BALANCE
PRIMARY BIAS
BIAS FINE TRIM
SECONDARY BIAS
PCB-8 Dolby P. C. Board
PRIMARY PLAYBACK FREQUENCY CHARACTERISTIC ADJ.
PRIMARY PLAYBACK OUTPUT LEVEL (R ch) ADJ.
TP.101
TP.102
PRIMARY PLAYBACK OUTPUT LEVEL (L ch) ADJ.
MPX FILTER CHARACTERISTIC ADJ.
COPY LEVEL ADJ.
PCB-9
REC MUTE
P. C. Board
BLK
RED
ORG
YEL
GRN
BLU

P. C. BOARD (1)

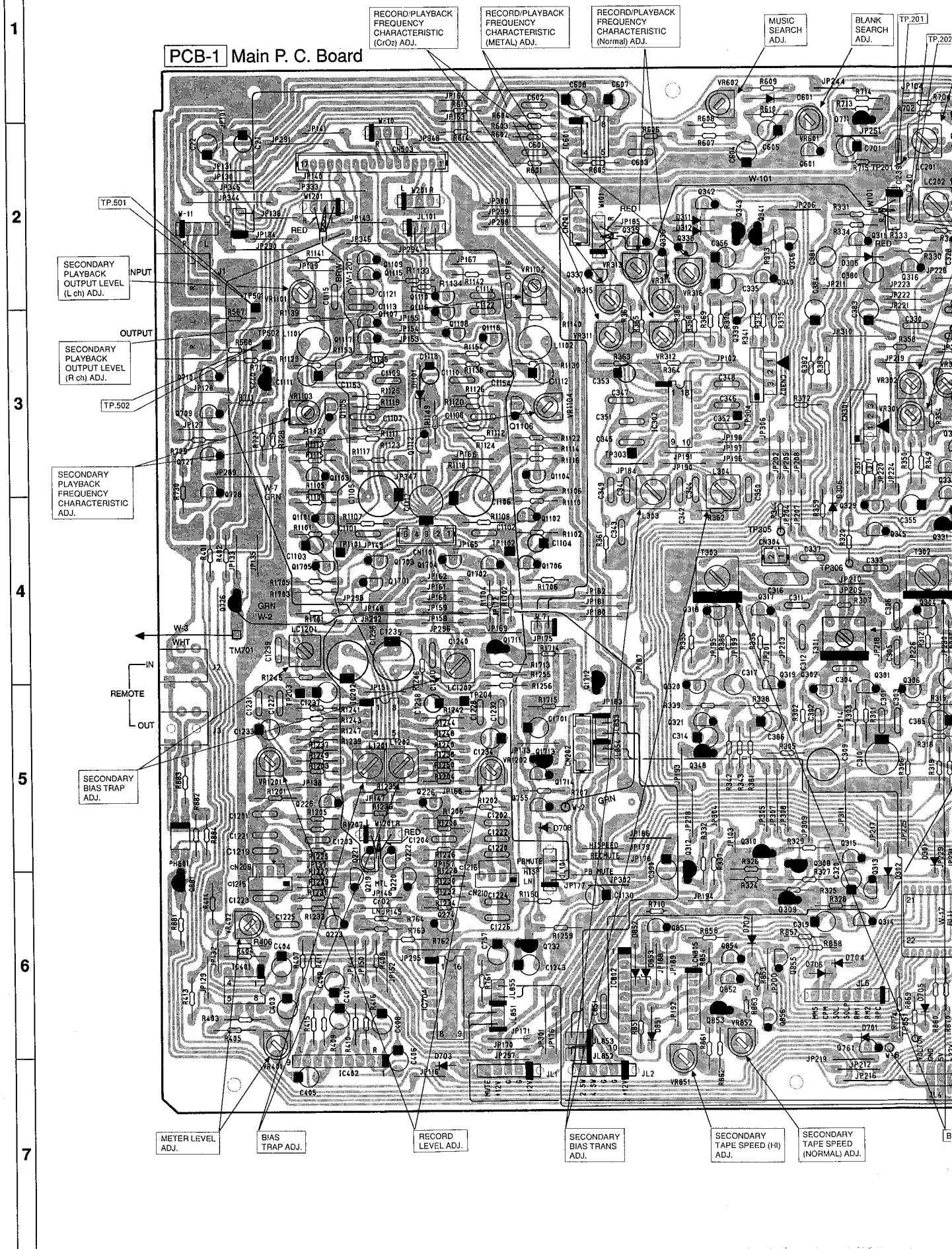
PCB-1 Main P. C. Board
RECORD/PLAYBACK FREQUENCY CHARACTERISTIC (CrO2) ADJ.
RECORD/PLAYBACK FREQUENCY CHARACTERISTIC (METAL) ADJ.
RECORD/PLAYBACK FREQUENCY CHARACTERISTIC (Normal) ADJ.
MUSIC SEARCH ADJ.
BLANK SEARCH ADJ.
TP.201
TP.202
TP.501
SECONDARY PLAYBACK OUTPUT LEVEL (L ch) ADJ.
INPUT
OUTPUT
SECONDARY PLAYBACK OUTPUT LEVEL (R ch) ADJ.
TP.502
SECONDARY PLAYBACK FREQUENCY CHARACTERISTIC ADJ.
REMOTE
IN
OUT
SECONDARY BIAS TRAP ADJ.
METER LEVEL ADJ.
BIAS TRAP ADJ.
RECORD LEVEL ADJ.
SECONDARY BIAS TRANS ADJ.
SECONDARY TAPE SPEED (HI) ADJ.
SECONDARY TAPE SPEED (NORMAL) ADJ.

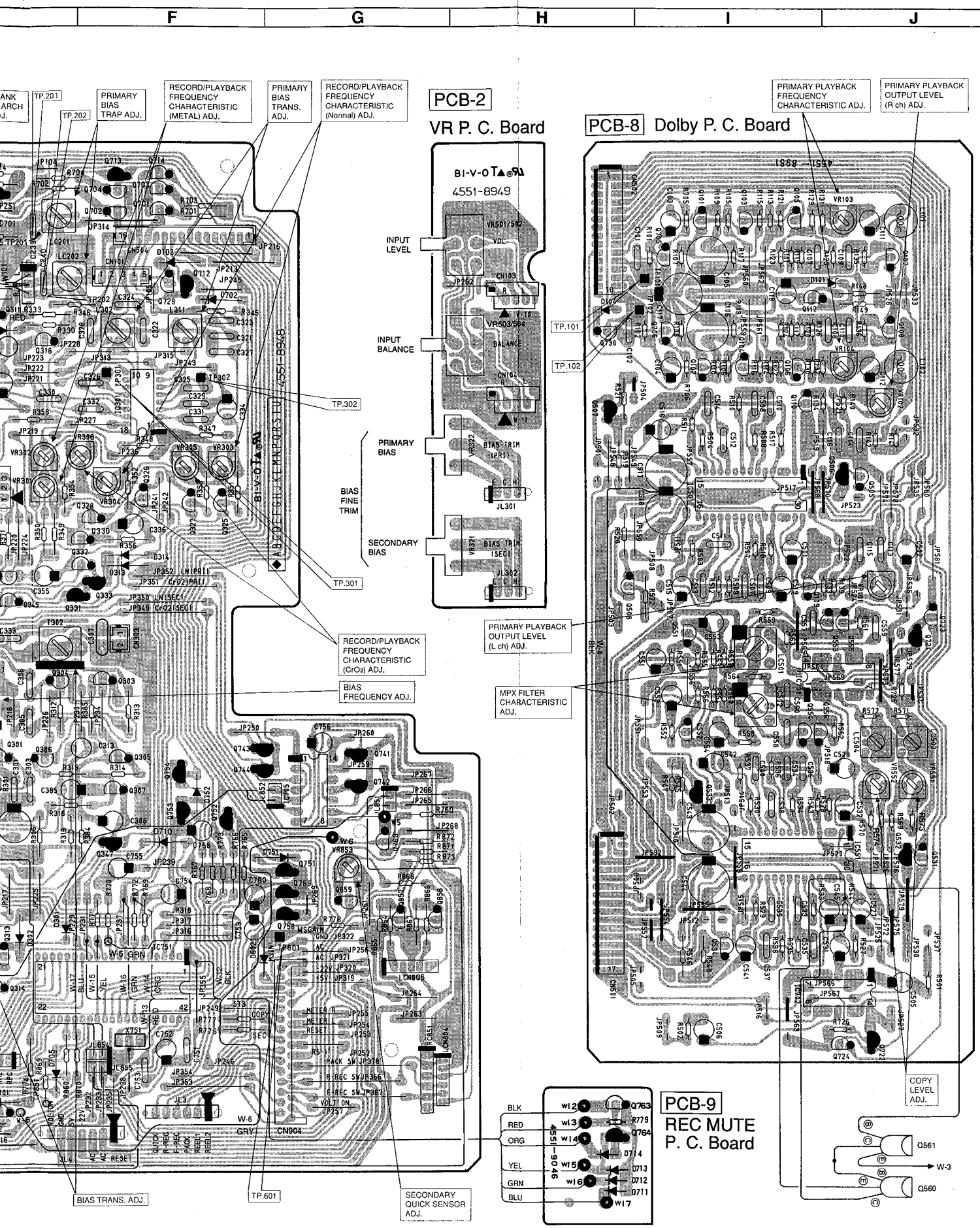
F
G
H
I
J
PCB-2
VR P. C. Board
PCB-8 Dolby P. C. Board
PCB-9
REC MUTE
P. C. Board
TP.201
TP.202
PRIMARY BIAS TRAP ADJ.
RECORD/PLAYBACK FREQUENCY CHARACTERISTIC (METAL) ADJ.
PRIMARY BIAS TRANS. ADJ.
RECORD/PLAYBACK FREQUENCY CHARACTERISTIC (Normal) ADJ.
INPUT LEVEL
INPUT BALANCE
PRIMARY BIAS
BIAS FINE TRIM
SECONDARY BIAS
TP.302
TP.301
RECORD/PLAYBACK FREQUENCY CHARACTERISTIC (CrO2) ADJ.
BIAS FREQUENCY ADJ.
BIAS TRANS. ADJ.
TP.601
SECONDARY QUICK SENSOR ADJ.
PRIMARY PLAYBACK FREQUENCY CHARACTERISTIC ADJ.
PRIMARY PLAYBACK OUTPUT LEVEL (R ch) ADJ.
TP.101
TP.102
PRIMARY PLAYBACK OUTPUT LEVEL (L ch) ADJ.
MPX FILTER CHARACTERISTIC ADJ.
COPY LEVEL ADJ.
BLK
RED
ORG
YEL
GRN
BLU
Q561
Q560
W-3

P. C. BOARD (2)

PCB-6 CONT SW-L P. C. Board

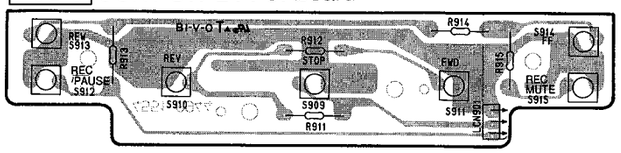

PCB-7 CONT SW-R P. C. Board

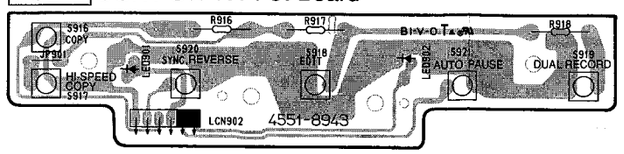

PCB-5 FRONT P. C. Board

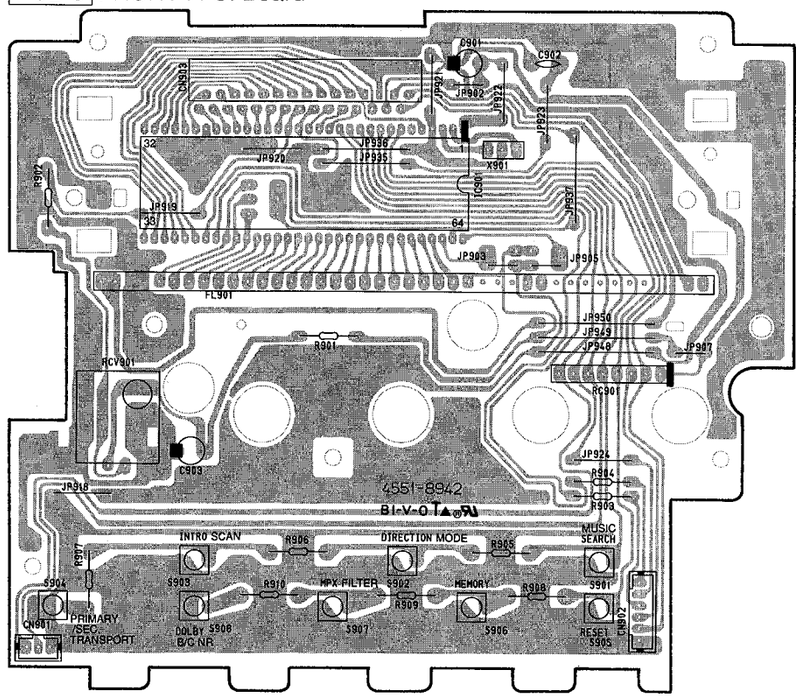

PCB-4 Power P. C. Board

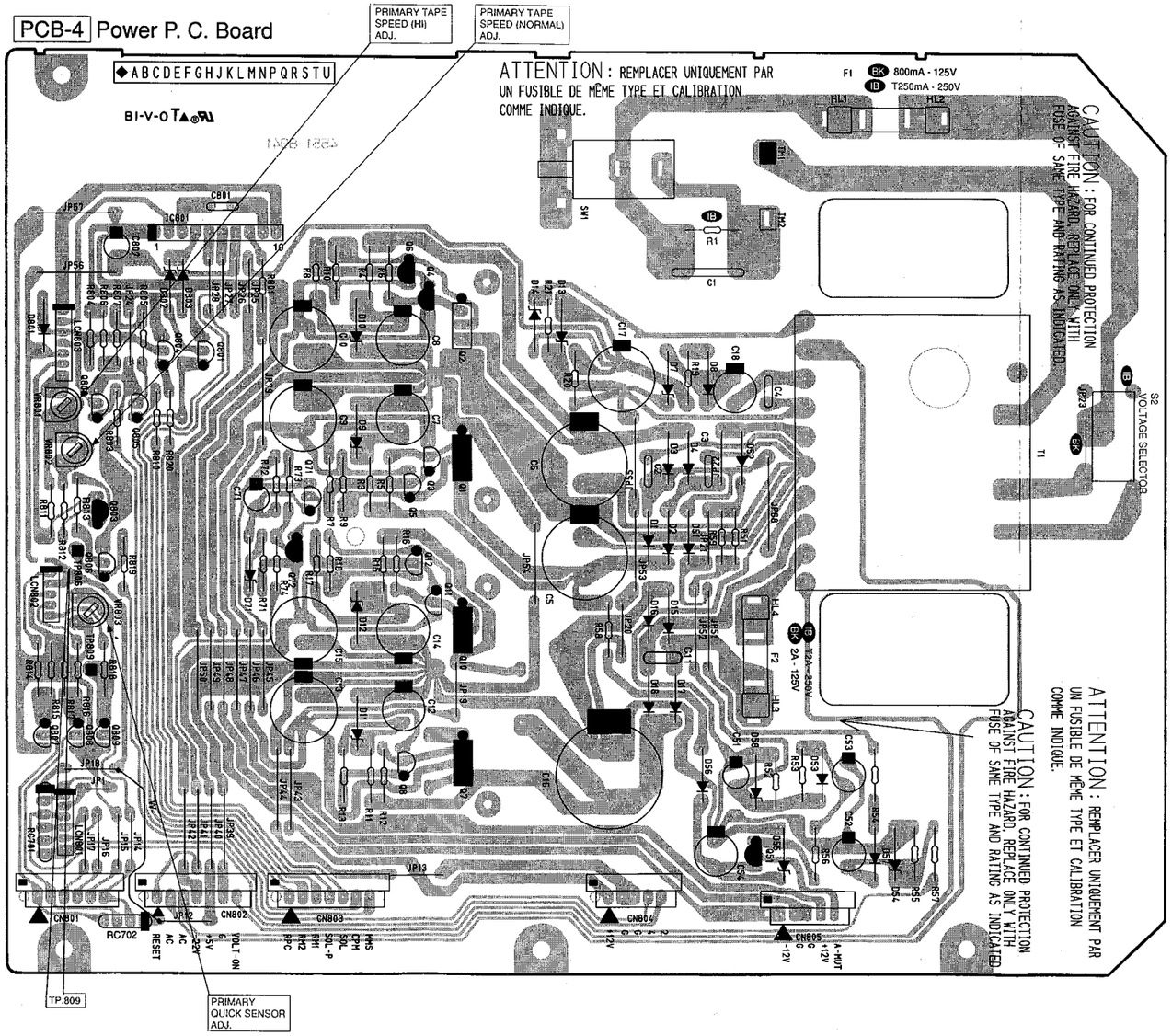

PCB-3 REC EQ P. C. Board

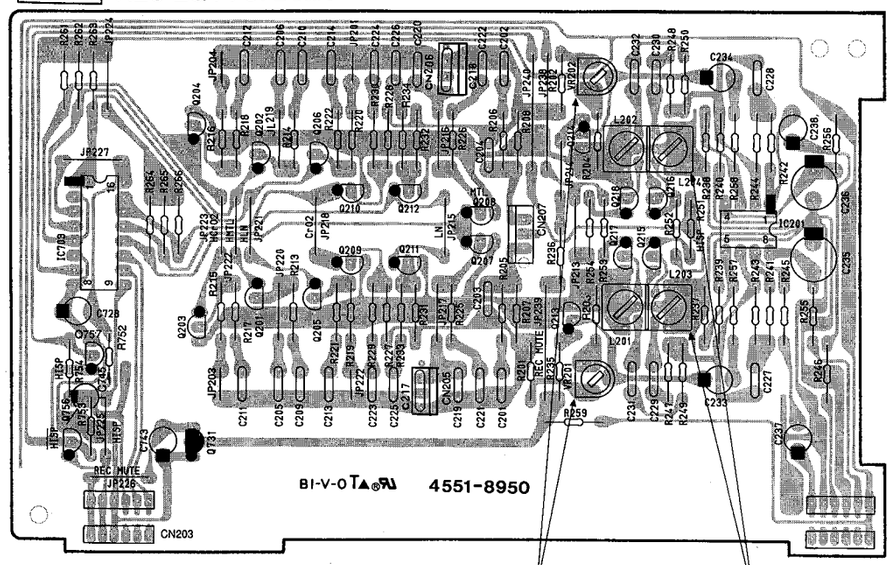

P. C. BOARD (2)

PCB-6 CONT SW-L P. C. Board

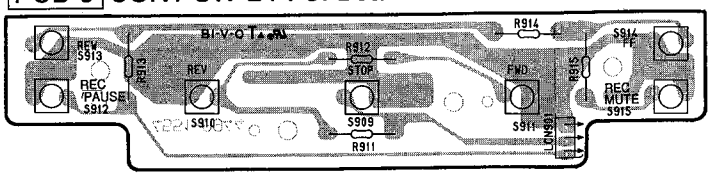

PCB-7 CONT SW-R P. C. Board

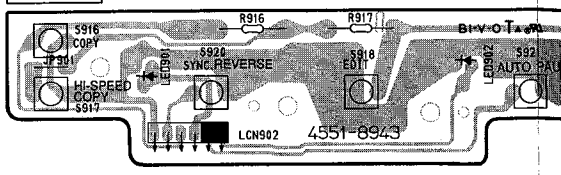

PCB-4 Power P. C. Board

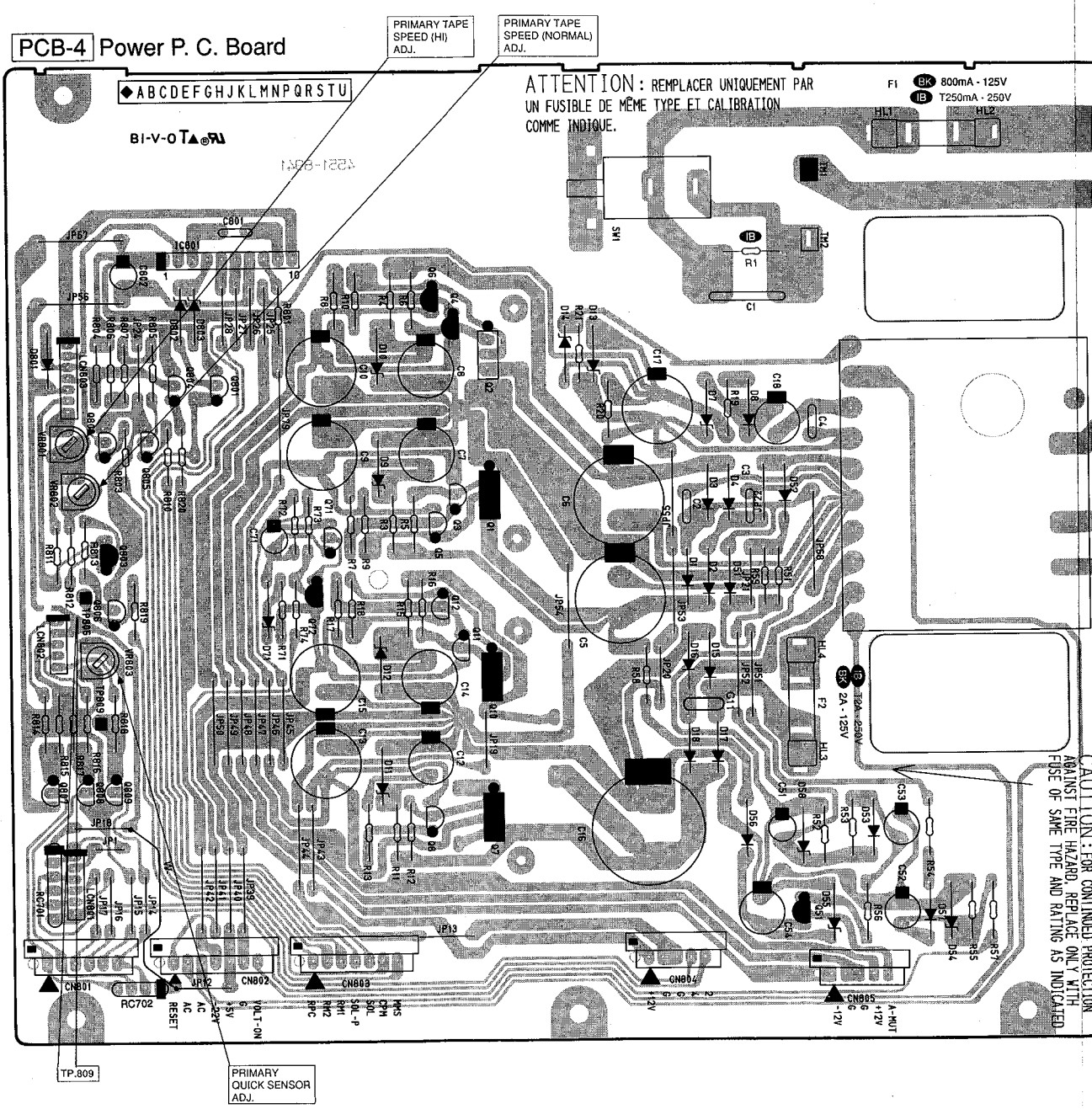

E | F | G | H | I | J

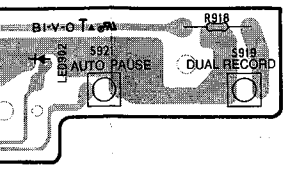

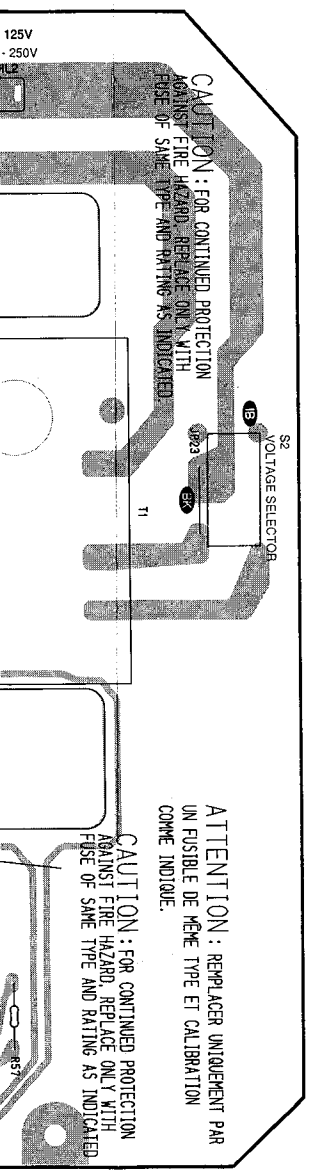

PCB-5 FRONT P. C. Board

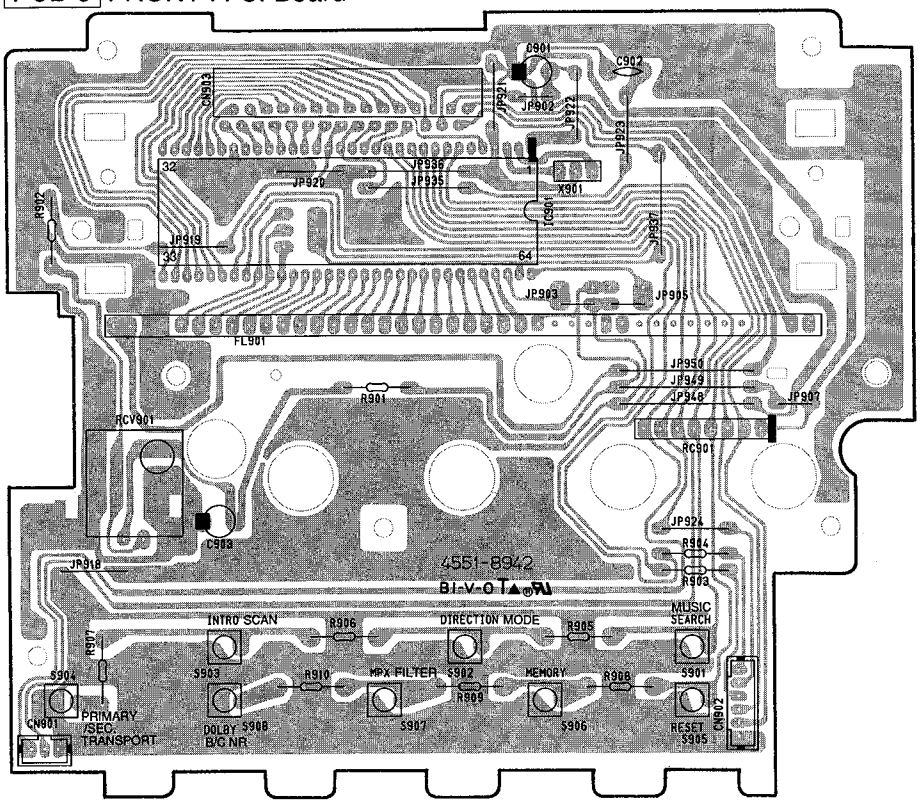

PCB-3 REC EQ P. C. Board

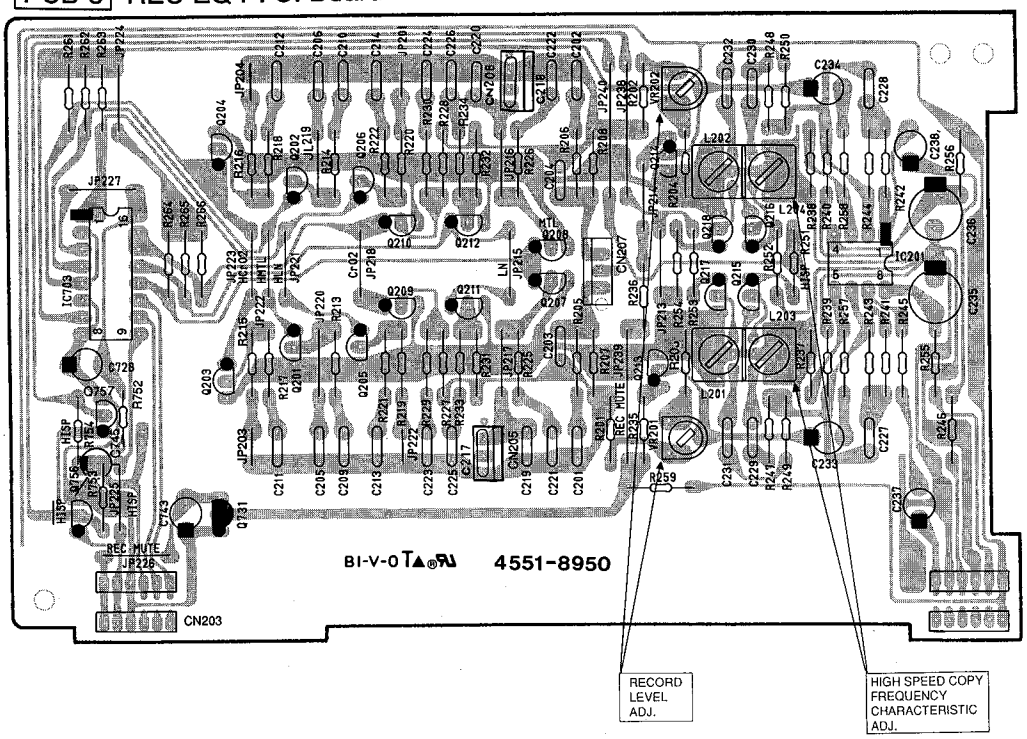

ELECTRICAL PARTS LIST

Ser. No.	Ref. No.	Part No.	Description
		PCB-1 MAIN P. C. BOARD	
		CAPACITORS	
604	C21	5345-107C041	CAP, MINI ELE 100μ/16V
604	C22	5345-107C041	CAP, MINI ELE 100μ/16V
415	C239	5361-221KB	CAP, CER 220P
415	C240	5361-221KB	CAP, CER 220P
500	C301	5359-S010J102	CAP, PPP 1000P
500	C302	5359-S010J102	CAP, PPP 1000P
501	C303	5359-S010J822	CAP, PPP 8200P
499	C304	5359-S010J332	CAP, PPP 3300P
500	C305	5359-S010J102	CAP, PPP 1000P
500	C306	5359-S010J102	CAP, PPP 1000P
502	C307	5354-S070K103	CAP, MYL .01μ
504	C308	5345-106E041	CAP, MINI ELE 10μ/35V
503	C309	5342-106D041	CAP, ELE BP 10μ/25V
505	C310	5345-476D041	CAP, MINI ELE 47μ/25V
500	C311	5359-S010J102	CAP, PPP 1000P
500	C312	5359-S010J102	CAP, PPP 1000P
503	C313	5342-106D041	CAP, ELE BP 10μ/25V
504	C314	5345-106E041	CAP, MINI ELE 10μ/35V
502	C316	5354-S070K103	CAP, MYL .01μ
503	C317	5342-106D041	CAP, ELE BP 10μ/25V
506	C319	5345-475F041	CAP, MINI ELE 4.7μ/50V
506	C320	5345-475F041	CAP, MINI ELE 4.7μ/50V
507	C321	5361-4710423	CAP, CER 470P
507	C322	5361-4710423	CAP, CER 470P
508	C323	5361-1010423	CAP, CER 100P
508	C324	5361-1010423	CAP, CER 100P
510	C325	5354-104593	CAP, MYL .1μ
510	C326	5354-104593	CAP, MYL .1μ
511	C327	5359-S010J561	CAP, PPP 560P
511	C328	5359-S010J561	CAP, PPP 560P
512	C329	5359-S010J223	CAP, PPP .022μ
512	C330	5359-S010J223	CAP, PPP .022μ
513	C331	5359-S010J103	CAP, PPP .01μ
513	C332	5359-S010J103	CAP, PPP .01μ
509	C333	5353-070534	CAP, MCA 7P
514	C334	5345-106E041	CAP, MINI ELE 10μ/35V
514	C335	5345-106E041	CAP, MINI ELE 10μ/35V
506	C336	5345-475E041	CAP, MINI ELE 4.7μ/50V
509	C337	5353-070534	CAP, MCA 7P
507	C341	5361-4710423	CAP, CER 470P
507	C342	5361-4710423	CAP, CER 470P
508	C343	5361-1010423	CAP, CER 100P
508	C344	5361-1010423	CAP, CER 100P
510	C345	5354-104593	CAP, MYL .1μ
510	C346	5354-104593	CAP, MYL .1μ
513	C347	5359-S010J103	CAP, PPP .01μ
513	C348	5359-S010J103	CAP, PPP .01μ
511	C349	5359-S010J561	CAP, PPP 560P
511	C350	5359-S010J561	CAP, PPP 560P
512	C351	5359-S010J223	CAP, PPP .022μ
512	C352	5359-S010J223	CAP, PPP .022μ
514	C353	5345-106E041	CAP, MINI ELE 10μ/35V
514	C355	5345-106E041	CAP, MINI ELE 10μ/35V
506	C356	5345-475E041	CAP, MINI ELE 4.7μ/50V
503	C380	5342-106D041	CAP, ELE BP 10μ/25V
503	C381	5342-106D041	CAP, ELE BP 10μ/25V
504	C383	5345-106E041	CAP, MINI ELE 10μ/35V
504	C384	5345-106E041	CAP, MINI ELE 10μ/35V
504	C385	5345-106E041	CAP, MINI ELE 10μ/35V
504	C386	5345-106E041	CAP, MINI ELE 10μ/35V
504	C390	5345-106E041	CAP, MINI ELE 10μ/35V
736	C403	5345-476D041	CAP, MINI ELE 47μ/25V
736	C404	5345-476D041	CAP, MINI ELE 47μ/25V
735	C405	5345-475F041	CAP, MINI ELE 4.7μ/50V
735	C406	5345-475F041	CAP, MINI ELE 4.7μ/50V
735	C407	5345-475F041	CAP, MINI ELE 4.7μ/50V
735	C408	5345-475F041	CAP, MINI ELE 4.7μ/50V
736	C409	5345-476D041	CAP, MINI ELE 47μ/25V
955	C601	5359-S010J103	CAP, PPP .01μ
960	C602	5359-S010K101	CAP, PPP 100P
956	C603	5359-S010J223	CAP, PPP .022μ
952	C604	5345-225F041	CAP, MINI ELE 2.2μ/50V
957	C605	5345-224F041	CAP, MINI ELE .22μ/50V
951	C607	5345-476C041	CAP, MINI ELE 47μ/16V
951	C608	5345-476C041	CAP, MINI ELE 47μ/16V
691	C701	5345-106E041	CAP, MINI ELE 10μ/35V
902	C751	5359-S010J103	CAP, PPP .01μ
900	C752	5345-106E041	CAP, MINI ELE 10μ/35V
902	C753	5359-S010J103	CAP, PPP .01μ
910	C754	5345-107B041	CAP, MINI ELE 100μ/10V
910	C755	5345-107B041	CAP, MINI ELE 100μ/10V
904	C756	5345-476B041	CAP, MINI ELE 47μ/10V
905	C757	5345-106E041	CAP, MINI ELE 10μ/35V
903	C758	5345-105F041	CAP, MINI ELE 1μ/50V
903	C759	5345-105F041	CAP, MINI ELE 1μ/50V
903	C760	5345-105F041	CAP, MINI ELE 1μ/50V
902	C851	5359-S010J103	CAP, PPP .01μ
316	C1101	5353-101534	CAP, MCA 100P
316	C1102	5353-101534	CAP, MCA 100P
312	C1103	5345-106C0951	CAP, MINI ELE 10μ/16V
312	C1104	5345-106C0951	CAP, MINI ELE 10μ/16V
313	C1105	5345-227B0952	CAP, MINI ELE 220μ/10V
313	C1106	5345-227B0952	CAP, MINI ELE 220μ/10V
317	C1107	5359-6825851	CAP, PPP 6800P
317	C1108	5359-6825851	CAP, PPP 6800P
317	C1109	5359-6825851	CAP, PPP 6800P
317	C1110	5359-6825851	CAP, PPP 6800P
312	C1111	5345-106C0951	CAP, MINI ELE 10μ/16V
312	C1112	5345-106C0951	CAP, MINI ELE 10μ/16V
320	C1113	5359-S010J562	CAP, PPP 5600P
320	C1114	5359-S010J562	CAP, PPP 5600P
321	C1115	5359-S010J272	CAP, PPP 2700P
321	C1116	5359-S010J272	CAP, PPP 2700P
315	C1117	5345-477C041	CAP, MINI ELE 470μ/16V
314	C1118	5345-336C041	CAP, MINI ELE 33μ/16V
318	C1121	5359-S010J682	CAP, PPP 6800P
318	C1122	5359-S010J682	CAP, PPP 6800P
322	C1130	5345-106E041	CAP, MINI ELE 10μ/35V
319	C1153	5359-S010J103	CAP, PPP .01μ
319	C1154	5359-S010J103	CAP, PPP .01μ
453	C1201	5359-S010J332	CAP, PPP 3300P
453	C1202	5359-S010J332	CAP, PPP 3300P
459	C1203	5359-S010J182	CAP, PPP 1800P
459	C1204	5359-S010J182	CAP, PPP 1800P
450	C1215	5359-S010J222	CAP, PPP 2200P
450	C1216	5359-S010J222	CAP, PPP 2200P
448	C1217	5359-S010J821	CAP, PPP 820P
448	C1218	5359-S010J821	CAP, PPP 820P
449	C1219	5359-S010J392	CAP, PPP 3900P
449	C1220	5359-S010J392	CAP, PPP 3900P
447	C1221	5359-S010J122	CAP, PPP 1200P
447	C1222	5359-S010J122	CAP, PPP 1200P
450	C1223	5359-S010J222	CAP, PPP 2200P
450	C1224	5359-S010J222	CAP, PPP 2200P
451	C1225	5359-S010J123	CAP, PPP .012μ
451	C1226	5359-S010J123	CAP, PPP .012μ
452	C1227	5354-124593	CAP, MYL .12μ
452	C1228	5354-124593	CAP, MYL .12μ
454	C1231	5359-S010J103	CAP, PPP .01μ
454	C1232	5359-S010J103	CAP, PPP .01μ
455	C1233	5345-105F0951	CAP, MINI ELE 1μ/50V
455	C1234	5345-105F0951	CAP, MINI ELE 1μ/50V
458	C1235	5345-227C041	CAP, MINI ELE 220μ/16V
458	C1236	5345-227C041	CAP, MINI ELE 220μ/16V
456	C1237	5345-225F0951	CAP, MINI ELE 2.2μ/50V
456	C1238	5345-225F0951	CAP, MINI ELE 2.2μ/50V
460	C1239	5361-221KB	CAP, CER 220P
460	C1240	5361-221KB	CAP, CER 220P
457	C1243	5345-107B041	CAP, MINI ELE 100μ/10V
691	C1701	5345-106E041	CAP, MINI ELE 10μ/35V
		RESISTORS	
515	R301	5135-105522	RES, CBN 1/2P 1M
515	R302	5135-105522	RES, CBN 1/2P 1M
516	R303	5135-101522	RES, CBN 1/2P 100
517	R305	5135-820522	RES, CBN 1/2P 82
518	R306	5135-220522	RES, CBN 1/2P 22

Ser. No.	Ref. No.	Part No.	Description
520	R307	5135-103522	RES, CBN 1/2P 10K
519	R312	5135-474522	RES, CBN 1/2P 470K
519	R313	5135-474522	RES, CBN 1/2P 470K
520	R314	5135-103522	RES, CBN 1/2P 10K
520	R315	5135-103522	RES, CBN 1/2P 10K
520	R318	5135-103522	RES, CBN 1/2P 10K
524	R319	5135-100522	RES, CBN 1/2P 10
525	R320	5135-104522	RES, CBN 1/2P 100K
535	R324	5135-222522	RES, CBN 1/2P 2.2K
533	R325	5135-223522	RES, CBN 1/2P 22K
533	R326	5135-223522	RES, CBN 1/2P 22K
520	R327	5135-103522	RES, CBN 1/2P 10K
520	R328	5135-103522	RES, CBN 1/2P 10K
520	R329	5135-103522	RES, CBN 1/2P 10K
537	R330	5135-472522	RES, CBN 1/2P 4.7K
537	R331	5135-472522	RES, CBN 1/2P 4.7K
537	R332	5135-472522	RES, CBN 1/2P 4.7K
538	R333	5135-822522	RES, CBN 1/2P 8.2K
538	R334	5135-822522	RES, CBN 1/2P 8.2K
519	R335	5135-474522	RES, CBN 1/2P 470K
519	R336	5135-474522	RES, CBN 1/2P 470K
538	R337	5135-822522	RES, CBN 1/2P 8.2K
520	R338	5135-103522	RES, CBN 1/2P 10K
520	R339	5135-103522	RES, CBN 1/2P 10K
531	R341	5135-471522	RES, CBN 1/2P 470
520	R342	5135-103522	RES, CBN 1/2P 10K
524	R343	5135-100522	RES, CBN 1/2P 10
525	R344	5135-104522	RES, CBN 1/2P 100K
526	R345	5135-154522	RES, CBN 1/2P 150K
526	R346	5135-154522	RES, CBN 1/2P 150K
527	R347	5135-333522	RES, CBN 1/2P 33K
527	R348	5135-333522	RES, CBN 1/2P 33K
528	R349	5135-102522	RES, CBN 1/2P 1K
528	R350	5135-102522	RES, CBN 1/2P 1K
529	R351	5135-121522	RES, CBN 1/2P 120
529	R352	5135-121522	RES, CBN 1/2P 120
534	R353	5135-152522	RES, CBN 1/2P 1.5K
534	R354	5135-152522	RES, CBN 1/2P 1.5K
532	R356	5135-123522	RES, CBN 1/2P 12K
532	R357	5135-123522	RES, CBN 1/2P 12K
527	R358	5135-333522	RES, CBN 1/2P 33K
533	R359	5135-223522	RES, CBN 1/2P 22K
526	R361	5135-154522	RES, CBN 1/2P 150K
526	R362	5135-154522	RES, CBN 1/2P 150K
527	R363	5135-333522	RES, CBN 1/2P 33K
527	R364	5135-333522	RES, CBN 1/2P 33K
529	R365	5135-121522	RES, CBN 1/2P 120
530	R366	5232-121J16P	RES, CBN 1/6P 120
534	R367	5135-152522	RES, CBN 1/2P 1.5K
540	R368	5232-152J16P	RES, CBN 1/6P 1.5K
523	R369	5232-102J16P	RES, CBN 1/6P 1K
528	R370	5135-102522	RES, CBN 1/2P 1K
531	R371	5135-471522	RES, CBN 1/2P 470
533	R372	5135-223522	RES, CBN 1/2P 22K
532	R373	5135-123522	RES, CBN 1/2P 12K
532	R374	5135-123522	RES, CBN 1/2P 12K
527	R375	5135-333522	RES, CBN 1/2P 33K
524	R381	5135-100522	RES, CBN 1/2P 10
539	R382	5135-220522	RES, CBN 1/2P 22
539	R383	5135-220522	RES, CBN 1/2P 22
524	R384	5135-100522	RES, CBN 1/2P 10
522	R385	5135-150522	RES, CBN 1/2P 15
522	R386	5135-150522	RES, CBN 1/2P 15
740	R401	5135-103522	RES, CBN 1/2P 10K
740	R402	5135-103522	RES, CBN 1/2P 10K
741	R403	5135-222522	RES, CBN 1/2P 2.2K
741	R404	5135-222522	RES, CBN 1/2P 2.2K
742	R405	5135-102522	RES, CBN 1/2P 1K
742	R406	5135-102522	RES, CBN 1/2P 1K
743	R407	5135-331522	RES, CBN 1/2P 330
743	R408	5135-331522	RES, CBN 1/2P 330
744	R409	5135-334522	RES, CBN 1/2P 330K
744	R410	5135-334522	RES, CBN 1/2P 330K
743	R411	5135-331522	RES, CBN 1/2P 330
745	R413	5135-104522	RES, CBN 1/2P 100K
745	R414	5135-104522	RES, CBN 1/2P 100K
746	R415	5135-223522	RES, CBN 1/2P 22K
746	R416	5135-223522	RES, CBN 1/2P 22K
660	R567	5135-102522	RES, CBN 1/2P 1K
660	R568	5135-102522	RES, CBN 1/2P 1K
969	R601	5135-563522	RES, CBN 1/2P 56K
963	R602	5135-104522	RES, CBN 1/2P 100K
965	R603	5135-331522	RES, CBN 1/2P 330
963	R604	5135-104522	RES, CBN 1/2P 100K
966	R605	5135-822522	RES, CBN 1/2P 8.2K
967	R606	5135-102522	RES, CBN 1/2P 1K
967	R607	5135-102522	RES, CBN 1/2P 1K
968	R608	5135-103522	RES, CBN 1/2P 10K
964	R609	5135-332522	RES, CBN 1/2P 3.3K
963	R610	5135-104522	RES, CBN 1/2P 100K
965	R613	5135-331522	RES, CBN 1/2P 330
965	R614	5135-331522	RES, CBN 1/2P 330
704	R701	5135-103522	RES, CBN 1/2P 10K
704	R702	5135-103522	RES, CBN 1/2P 10K
701	R703	5135-392522	RES, CBN 1/2P 3.9K
701	R704	5135-392522	RES, CBN 1/2P 3.9K
708	R707	5135-472522	RES, CBN 1/2P 4.7K
707	R710	5232-183J16P	RES, CBN 1/6P 18K
702	R711	5135-222522	RES, CBN 1/2P 2.2K
702	R712	5135-222522	RES, CBN 1/2P 2.2K
702	R713	5135-222522	RES, CBN 1/2P 2.2K
704	R714	5135-103522	RES, CBN 1/2P 10K
704	R715	5135-103522	RES, CBN 1/2P 10K
706	R727	5135-394522	RES, CBN 1/2P 390K
706	R728	5135-394522	RES, CBN 1/2P 390K
715	R729	5135-102522	RES, CBN 1/2P 1K
715	R730	5135-102522	RES, CBN 1/2P 1K
711	R760	5135-562522	RES, CBN 1/2P 5.6K
712	R761	5135-221522	RES, CBN 1/2P 220
713	R762	5135-273522	RES, CBN 1/2P 27K
714	R763	5135-473522	RES, CBN 1/2P 47K
714	R764	5135-473522	RES, CBN 1/2P 47K
715	R765	5135-102522	RES, CBN 1/2P 1K
715	R766	5135-102522	RES, CBN 1/2P 1K
715	R767	5135-102522	RES, CBN 1/2P 1K
715	R768	5135-102522	RES, CBN 1/2P 1K
719	R769	5232-102J16P	RES, CBN 1/6P 1K
715	R770	5135-102522	RES, CBN 1/2P 1K
719	R771	5232-102J16P	RES, CBN 1/6P 1K
715	R772	5135-102522	RES, CBN 1/2P 1K
715	R773	5135-102522	RES, CBN 1/2P 1K
719	R774	5232-102J16P	RES, CBN 1/6P 1K
715	R776	5135-102522	RES, CBN 1/2P 1K
715	R777	5135-102522	RES, CBN 1/2P 1K
702	R778	5135-222522	RES, CBN 1/2P 2.2K
923	⚠ R851	5102-1005116	RES, FUSE 10
935	R853	5232-103J16P	RES, CBN 1/6P 10K
926	R854	5135-150522	RES, CBN 1/2P 15
926	R856	5135-150522	RES, CBN 1/2P 15
926	R857	5135-150522	RES, CBN 1/2P 15
926	R858	5135-150522	RES, CBN 1/2P 15
925	R860	5135-103522	RES, CBN 1/2P 10K
931	R861	5174-S010F243	RES, MTL 1/4P 24K
929	R862	5174-S010F113	RES, MTL 1/4P 11K
934	R863	5135-224522	RES, CBN 1/2P 220K
924	R864	5135-222522	RES, CBN 1/2P 2.2K
927	R865	5135-223522	RES, CBN 1/2P 22K
924	R866	5135-222522	RES, CBN 1/2P 2.2K
927	R867	5135-223522	RES, CBN 1/2P 22K
922	R868	5135-471522	RES, CBN 1/2P 470
936	R869	5135-103522	RES, CBN 1/2P 10K
925	R870	5135-103522	RES, CBN 1/2P 10K
930	R871	5135-273522	RES, CBN 1/2P 27K
930	R872	5135-273522	RES, CBN 1/2P 27K
930	R873	5135-273522	RES, CBN 1/2P 27K
895	R881	5135-392522	RES, CBN 1/2P 3.9K
897	R882	5135-470522	RES, CBN 1/2P 47
896	R883	5135-271522	RES, CBN 1/2P 270
898	R884	5135-473522	RES, CBN 1/2P 47K
325	R1101	5135-470522	RES, CBN 1/2P 47
325	R1102	5135-470522	RES, CBN 1/2P 47
326	R1105	5174-S010F223	RES, MTL 1/4P 22K

Ser. No.	Ref. No.	Part No.	Description
326	R1106	5174-S010F223	RES, MTL 1/4P 22K
327	R1107	5174-S010F331	RES, MTL 1/4P 330
327	R1108	5174-S010F331	RES, MTL 1/4P 330
328	R1109	5135-224522	RES, CBN 1/2P 220K
328	R1110	5135-224522	RES, CBN 1/2P 220K
329	R1111	5135-332522	RES, CBN 1/2P 3.3K
329	R1112	5135-332522	RES, CBN 1/2P 3.3K
330	R1113	5135-562522	RES, CBN 1/2P 5.6K
330	R1114	5135-562522	RES, CBN 1/2P 5.6K
331	R1115	5135-470522	RES, CBN 1/2P 47
331	R1116	5135-470522	RES, CBN 1/2P 47
332	R1117	5135-681522	RES, CBN 1/2P 680
332	R1118	5135-681522	RES, CBN 1/2P 680
333	R1119	5135-684522	RES, CBN 1/2P 680K
333	R1120	5135-684522	RES, CBN 1/2P 680K
334	R1121	5135-101522	RES, CBN 1/2P 100
334	R1122	5135-101522	RES, CBN 1/2P 100
335	R1123	5135-102522	RES, CBN 1/2P 1K
335	R1124	5135-102522	RES, CBN 1/2P 1K
336	R1125	5232-822J16P	RES, CBN 1/6P 8.2K
336	R1126	5232-822J16P	RES, CBN 1/6P 8.2K
339	R1129	5135-101522	RES, CBN 1/2P 100
339	R1130	5135-101522	RES, CBN 1/2P 100
329	R1133	5135-332522	RES, CBN 1/2P 3.3K
338	R1134	5232-332J16P	RES, CBN 1/6P 3.3K
341	R1135	5135-392522	RES, CBN 1/2P 3.9K
341	R1136	5135-392522	RES, CBN 1/2P 3.9K
340	R1139	5135-103522	RES, CBN 1/2P 10K
340	R1140	5135-103522	RES, CBN 1/2P 10K
342	R1141	5135-104522	RES, CBN 1/2P 100K
324	R1142	5232-104J16P	RES, CBN 1/6P 100K
344	R1149	5135-102522	RES, CBN 1/2P 1K
343	R1150	5135-222522	RES, CBN 1/2P 2.2K
337	R1153	5135-331522	RES, CBN 1/2P 330
337	R1154	5135-331522	RES, CBN 1/2P 330
461	R1201	5135-222522	RES, CBN 1/2P 2.2K
461	R1202	5135-222522	RES, CBN 1/2P 2.2K
462	R1203	5135-272522	RES, CBN 1/2P 2.7K
462	R1204	5135-272522	RES, CBN 1/2P 2.7K
463	R1205	5135-393522	RES, CBN 1/2P 39K
463	R1206	5135-393522	RES, CBN 1/2P 39K
464	R1207	5135-103522	RES, CBN 1/2P 10K
464	R1208	5135-103522	RES, CBN 1/2P 10K
466	R1225	5135-683522	RES, CBN 1/2P 68K
466	R1226	5135-683522	RES, CBN 1/2P 68K
467	R1227	5135-563522	RES, CBN 1/2P 56K
467	R1228	5135-563522	RES, CBN 1/2P 56K
468	R1229	5135-153522	RES, CBN 1/2P 15K
468	R1230	5135-153522	RES, CBN 1/2P 15K
464	R1231	5135-103522	RES, CBN 1/2P 10K
464	R1232	5135-103522	RES, CBN 1/2P 10K
469	R1233	5135-472522	RES, CBN 1/2P 4.7K
469	R1234	5135-472522	RES, CBN 1/2P 4.7K
469	R1235	5135-472522	RES, CBN 1/2P 4.7K
469	R1236	5135-472522	RES, CBN 1/2P 4.7K
470	R1237	5135-104522	RES, CBN 1/2P 100K
470	R1238	5135-104522	RES, CBN 1/2P 100K
461	R1239	5135-222522	RES, CBN 1/2P 2.2K
461	R1240	5135-222522	RES, CBN 1/2P 2.2K
465	R1241	5135-273522	RES, CBN 1/2P 27K
465	R1242	5135-273522	RES, CBN 1/2P 27K
467	R1243	5135-563522	RES, CBN 1/2P 56K
467	R1244	5135-563522	RES, CBN 1/2P 56K
464	R1245	5135-103522	RES, CBN 1/2P 10K
464	R1246	5135-103522	RES, CBN 1/2P 10K
473	R1247	5135-221522	RES, CBN 1/2P 220
473	R1248	5135-221522	RES, CBN 1/2P 220
471	R1249	5135-121522	RES, CBN 1/2P 120
471	R1250	5135-121522	RES, CBN 1/2P 120
472	R1255	5135-331522	RES, CBN 1/2P 330
472	R1256	5135-331522	RES, CBN 1/2P 330
470	R1259	5135-104522	RES, CBN 1/2P 100K
704	R1701	5135-103522	RES, CBN 1/2P 10K
704	R1702	5135-103522	RES, CBN 1/2P 10K
701	R1703	5135-392522	RES, CBN 1/2P 3.9K
701	R1704	5135-392522	RES, CBN 1/2P 3.9K
704	R1705	5135-103522	RES, CBN 1/2P 10K
704	R1706	5135-103522	RES, CBN 1/2P 10K
702	R1713	5135-222522	RES, CBN 1/2P 2.2K
705	R1714	5135-103522	RES, CBN 1/2P 10K
705	R1715	5135-103522	RES, CBN 1/2P 10K
		INTEGRATED CIRCUITS	
441	IC202	5653-UPC4570C	IC, LINEAR
481	IC301	5653-U1297CA	IC, LINEAR
481	IC302	5653-U1297CA	IC, LINEAR
721	IC401	5652-NJM4558D	IC, MONO
722	IC402	5653-BA6138	IC, LINEAR
941	IC601	5652-NJM4558D	IC, MONO
665	IC704	5654-TC4052BP	IC, DIGITAL
662	IC705	5654-TC4011BP	IC, DIGITAL
871	IC751	5654-MN15542	IC, DIGITAL
874	IC802	5653-BA6229	IC, LINEAR
		TRANSISTORS	
442	Q219	5613-C114YS	XISTOR, NPN R
442	Q220	5613-C114YS	XISTOR, NPN R
442	Q221	5613-C114YS	XISTOR, NPN R
442	Q222	5613-C114YS	XISTOR, NPN R
442	Q223	5613-C114YS	XISTOR, NPN R
442	Q224	5613-C114YS	XISTOR, NPN R
443	Q225	5613-2878(B)	XISTOR, NPN R
443	Q226	5613-2878(B)	XISTOR, NPN R
482	Q301	5613-2320(F)	XISTOR, NPN R
482	Q302	5613-2320(F)	XISTOR, NPN R
482	Q303	5613-2320(F)	XISTOR, NPN R
482	Q304	5613-2320(F)	XISTOR, NPN R
482	Q305	5613-2320(F)	XISTOR, NPN R
482	Q306	5613-2320(F)	XISTOR, NPN R
483	Q307	5613-C114YS	XISTOR, NPN R
484	Q308	5611-950(Y)	XISTOR, PNP R
484	Q309	5611-950(Y)	XISTOR, PNP R
484	Q310	5611-950(Y)	XISTOR, PNP R
486	Q311	5613-2120(Y)	XISTOR, NPN R
484	Q312	5611-950(Y)	XISTOR, PNP R
485	Q313	5613-C114YS	XISTOR, NPN R
485	Q314	5613-C114YS	XISTOR, NPN R
485	Q315	5613-C114YS	XISTOR, NPN R
486	Q316	5613-2120(Y)	XISTOR, NPN R
482	Q317	5613-2320(F)	XISTOR, NPN R
482	Q318	5613-2320(F)	XISTOR, NPN R
482	Q319	5613-2320(F)	XISTOR, NPN R
482	Q320	5613-2320(F)	XISTOR, NPN R
483	Q321	5613-C114YS	XISTOR, NPN R
487	Q325	5613-C114YS	XISTOR, NPN R
487	Q326	5613-C114YS	XISTOR, NPN R
487	Q327	5613-C114YS	XISTOR, NPN R
487	Q328	5613-C114YS	XISTOR, NPN R
488	Q329	5613-2320(F)	XISTOR, NPN R
488	Q330	5613-2320(F)	XISTOR, NPN R
490	Q331	5611-A143ES	XISTOR, PNP R
485	Q332	5613-C114YS	XISTOR, NPN R
491	Q333	5611-A114YS	XISTOR, PNP R
487	Q335	5613-C114YS	XISTOR, NPN R
487	Q336	5613-C114YS	XISTOR, NPN R
487	Q337	5613-C114YS	XISTOR, NPN R
487	Q338	5613-C114YS	XISTOR, NPN R
48	Q339	5613-2320(F)	XISTOR, NPN R
488	Q340	5613-2320(F)	XISTOR, NPN R
490	Q341	5611-A143ES	XISTOR, PNP R
485	Q342	5613-C114YS	XISTOR, NPN R
491	Q343	5611-A114YS	XISTOR, PNP R
487	Q345	5613-C114YS	XISTOR, NPN R
487	Q346	5613-C114YS	XISTOR, NPN R
491	Q347	5611-A114YS	XISTOR, PNP R
491	Q348	5611-A114YS	XISTOR, PNP R
943	Q601	5613-C114YS	XISTOR, NPN R
672	Q701	5613-2240(BL)	XISTOR, NPN R
672	Q702	5613-2240(BL)	XISTOR, NPN R
672	Q703	5613-2240(BL)	XISTOR, NPN R
672	Q704	5613-2240(BL)	XISTOR, NPN R
674	Q709	5613-2878(B)	XISTOR, NPN R

Ser. No.	Ref. No.	Part No.	Description
674	Q710	5613-2878(B)	XISTOR, NPN R
677	Q711	5611-970(BL)	XISTOR, PNP R
675	Q712	5611-A114YS	XISTOR, PNP R
675	Q713	5611-A114YS	XISTOR, PNP R
676	Q714	5613-C114YS	XISTOR, NPN R
675	Q725	5611-A114YS	XISTOR, PNP R
675	Q726	5611-A114YS	XISTOR, PNP R
680	Q727	5613-C114TS	XISTOR, NPN R
680	Q728	5613-C114TS	XISTOR, NPN R
680	Q729	5613-C114TS	XISTOR, NPN R
675	Q732	5611-A114YS	XISTOR, PNP R
878	Q741	5611-A114YS	XISTOR, PNP R
878	Q742	5611-A114YS	XISTOR, PNP R
878	Q743	5611-A114YS	XISTOR, PNP R
878	Q744	5611-A114YS	XISTOR, PNP R
671	Q751	5611-933S(S)	XISTOR, PNP R
675	Q752	5611-A114YS	XISTOR, PNP R
671	Q753	5611-933S(S)	XISTOR, PNP R
675	Q754	5611-A114YS	XISTOR, PNP R
682	Q755	5613-C114YS	XISTOR, NPN R
878	Q758	5611-A114YS	XISTOR, PNP R
878	Q759	5611-A114YS	XISTOR, PNP R
682	Q760	5613-C114YS	XISTOR, NPN R
680	Q761	5613-C114TS	XISTOR, NPN R
883	Q851	5613-C114YS	XISTOR, NPN R
880	Q852	5613-2925(T)	XISTOR, NPN R
877	Q853	5611-999(F)	XISTOR, PNP R
880	Q854	5613-2925(T)	XISTOR, NPN R
880	Q855	5613-2925(T)	XISTOR, NPN R
885	Q856	5613-1740S(S)	XISTOR, NPN R
887	Q857	5613-2320(F)	XISTOR, NPN R
887	Q858	5613-2320(F)	XISTOR, NPN R
887	Q859	5613-2320(F)	XISTOR, NPN R
899	Q881	5611-A143ES	XISTOR, PNP R
301	Q1101	5613-1775(F)	XISTOR, NPN R
301	Q1102	5613-1775(F)	XISTOR, NPN R
301	Q1103	5613-1775(F)	XISTOR, NPN R
301	Q1104	5613-1775(F)	XISTOR, NPN R
302	Q1105	5613-2320L(F)	XISTOR, NPN R
302	Q1106	5613-2320L(F)	XISTOR, NPN R
303	Q1107	5613-C114YS	XISTOR, NPN R
303	Q1108	5613-C114YS	XISTOR, NPN R
304	Q1109	5613-2878(B)	XISTOR, NPN R
305	Q1110	5613-2878(B)	XISTOR, NPN R
306	Q1112	5613-2320(F)	XISTOR, NPN R
303	Q1115	5613-C114YS	XISTOR, NPN R
303	Q1116	5613-C114YS	XISTOR, NPN R
303	Q1117	5613-C114YS	XISTOR, NPN R
303	Q1118	5613-C114YS	XISTOR, NPN R
672	Q1701	5613-2240(BL)	XISTOR, NPN R
672	Q1702	5613-2240(BL)	XISTOR, NPN R
672	Q1703	5613-2240(BL)	XISTOR, NPN R
672	Q1704	5613-2240(BL)	XISTOR, NPN R
674	Q1705	5613-2878(B)	XISTOR, NPN R
674	Q1706	5613-2878(B)	XISTOR, NPN R
677	Q1711	5611-970(BL)	XISTOR, PNP R
675	Q1712	5611-A114YS	XISTOR, PNP R
675	Q1713	5611-A114YS	XISTOR, PNP R
676	Q1714	5613-C114YS	XISTOR, NPN R
		DIODES	
346	D103	5631-1S2473	DIODE, DET
521	D301	5631-1SS133	DIODE, DET
492	D302	5631-1S2473	DIODE, DET
489	D305	5632-S5566B	DIODE, RECT
489	D306	5632-S5566B	DIODE, RECT
492	D311	5631-1S2473	DIODE, DET
492	D312	5631-1S2473	DIODE, DET
492	D313	5631-1S2473	DIODE, DET
492	D314	5631-1S2473	DIODE, DET
945	D601	5631-1S2473	DIODE, DET
945	D602	5631-1S2473	DIODE, DET
684	D701	5631-1S2473	DIODE, DET
684	D702	5631-1S2473	DIODE, DET
673	D703	5631-1SS133	DIODE, DET
673	D704	5631-1SS133	DIODE, DET
684	D705	5631-1S2473	DIODE, DET
673	D706	5631-1SS133	DIODE, DET
684	D707	5631-1S2473	DIODE, DET
673	D708	5631-1SS133	DIODE, DET
684	D710	5631-1S2473	DIODE, DET
684	D751	5631-1S2473	DIODE, DET
684	D752	5631-1S2473	DIODE, DET
893	D851	5632-S5566B	DIODE, RECT
891	D852	5635-HZ5C2	DIODE, ZENER
889	D853	5635-HZ7C3	DIODE, ZENER
307	D1101	5635-HZ11B2L	DIODE, ZENER
		COILS	
493	L301	5932-11401	COIL CASE, 7
493	L302	5932-11401	COIL CASE, 7
493	L303	5932-11401	COIL CASE, 7
493	L304	5932-11401	COIL CASE, 7
309	L1101	5995-S160J472	COIL W/CORE
309	L1102	5995-S160J472	COIL W/CORE
444	L1201	5932-11501	COIL CASE, 7
444	L1202	5932-11501	COIL CASE, 7
494	T301	5923-10801	OSC COIL, 10
495	T302	5923-10802	OSC COIL, 10
495	T303	5923-10802	OSC COIL, 10
		CONTROLS	
496	VR301	5101-S0801203	RES, SEMI FIX 20K
496	VR302	5101-S0801203	RES, SEMI FIX 20K
497	VR303	5101-S0801502	RES, SEMI FIX 5K
497	VR304	5101-S0801502	RES, SEMI FIX 5K
498	VR305	5101-S0801103	RES, SEMI FIX 10K
498	VR306	5101-S0801103	RES, SEMI FIX 10K
496	VR311	5101-S0801203	RES, SEMI FIX 20K
496	VR312	5101-S0801203	RES, SEMI FIX 20K
497	VR313	5101-S0801502	RES, SEMI FIX 5K
497	VR314	5101-S0801502	RES, SEMI FIX 5K
498	VR315	5101-S0801103	RES, SEMI FIX 10K
498	VR316	5101-S0801103	RES, SEMI FIX 10K
730	VR401	5101-S0801203	RES, SEMI FIX 20K
730	VR402	5101-S0801203	RES, SEMI FIX 20K
947	VR601	5101-S0801104	RES, SEMI FIX 100K
947	VR602	5101-S0801104	RES, SEMI FIX 100K
915	VR851	5101-S0801103	RES, SEMI FIX 10K
915	VR852	5101-S0801103	RES, SEMI FIX 10K
913	VR853	5101-S0801502	RES, SEMI FIX 5K
310	VR1101	5101-S0801203	RES, SEMI FIX 20K
310	VR1102	5101-S0801203	RES, SEMI FIX 20K
311	VR1103	5101-S0801501	RES, SEMI FIX 500
311	VR1104	5101-S0801501	RES, SEMI FIX 500
446	VR1201	5101-S0801502	RES, SEMI FIX 5K
446	VR1202	5101-S0801502	RES, SEMI FIX 5K
		MISCELLANEOUS	
790	CN101	4443-03201005	CONNECTOR
831	CN201	4443-01801006	CONNECTOR
831	CN202	4443-01801006	CONNECTOR
795	CN209	4443-030185	CONNECTOR
795	CN210	4443-030185	CONNECTOR
795	CN301	4443-030185	CONNECTOR
795	CN302	4443-030185	CONNECTOR
791	CN303	4443-03201002	CONNECTOR
791	CN304	4443-03201002	CONNECTOR
829	CN503	4443-01801017	CONNECTOR
837	CN504	4443-01801016	CONNECTOR
794	CN904	4443-05501030	CONNECTOR
790	CN1101	4443-03201005	CONNECTOR
782	⚠ J1	4484-46	PIN JACK, 4P
784	J2	4451-00184	JACK, 1P
784	J3	4451-00184	JACK, 1P
811	JL1	4242-R0505500	JUMPER LEAD
811	JL2	4242-R0505500	JUMPER LEAD
812	JL3	4242-R0506600	JUMPER LEAD
813	JL4	4242-R0507800	JUMPER LEAD
813	JL5	4242-R0507800	JUMPER LEAD
825	JL7	4132-R0200181	CORD, 2C
816	JL101	4242-R0503221	JUMPER LEAD

Ser. No.	Ref. No.	Part No.	Description
818	JL851	4132-R0202231	CORD, 2C
818	JL852	4132-R0202231	CORD, 2C
817	JL853	4132-R0202101	CORD, 2C
824	JL854	4132-R0200151	CORD, 2C
824	JL855	4132-R0200151	CORD, 2C
396	LC201	5214-13801	LC COMPOSITE
396	LC202	5214-13801	LC COMPOSITE
445	LC1201	5214-13801	LC COMPOSITE
445	LC1202	5214-13801	LC COMPOSITE
807	LCN804	4163-S0206201	CONNECTOR W/W
808	LCN805	4163-S0207351	CONNECTOR W/W
806	LCN806	4163-S0205201	CONNECTOR W/W
894	PH801	5624-PC817	PHOTO COUPLER
911	RC851	5212-S0305273	R COMPOSITE
781	TM701	4214-132	TERMINAL
781	TP203	4214-132	TERMINAL
781	TP204	4214-132	TERMINAL
781	TP301	4214-132	TERMINAL
781	TP302	4214-132	TERMINAL
781	TP303	4214-132	TERMINAL
781	TP304	4214-132	TERMINAL
781	TP305	4214-132	TERMINAL
781	TP306	4214-132	TERMINAL
781	TP501	4214-132	TERMINAL
781	TP502	4214-132	TERMINAL
781	TP601	4214-132	TERMINAL
801	TP859	4214-132	TERMINAL
781	TP1101	4214-132	TERMINAL
781	TP1102	4214-132	TERMINAL
909	X751	5693-CST4MGW	OSC, CER

PCB-2 VR P. C. BOARD

CONTROLS

762	VR321	5113-S1104502	RES, V CBN 16 5K
762	VR322	5113-S1104502	RES, V CBN 16 5K
758	VR501/502	5113-S1102503	RES, V CBN 16 50K
760	VR503/504	5113-S1103104	RES, V CBN 16 100K

MISCELLANEOUS

792	CN103	4443-030185	CONNECTOR
792	CN104	4443-030185	CONNECTOR
815	JL301	4242-R0503221	JUMPER LEAD
815	JL302	4242-R0503221	JUMPER LEAD

PCB-3 REC. EQ P. C. BOARD

CAPACITORS

408	C201	5359-S010J332	CAP, PPP 3300P
408	C202	5359-S010J332	CAP, PPP 3300P
414	C203	5359-S010J182	CAP, PPP 1800P
414	C204	5359-S010J182	CAP, PPP 1800P
400	C205	5359-S010J272	CAP, PPP 2700P
400	C206	5359-S010J272	CAP, PPP 2700P
398	C209	5359-S010J472	CAP, PPP 4700P
398	C210	5359-S010J472	CAP, PPP 4700P
399	C211	5359-S010J682	CAP, PPP 6800P
399	C212	5359-S010J682	CAP, PPP 6800P
401	C213	5359-S010J153	CAP, PPP .015μ
401	C214	5359-S010J153	CAP, PPP .015μ
405	C215	5359-S010J222	CAP, PPP 2200P
405	C216	5359-S010J222	CAP, PPP 2200P
403	C217	5359-S010J821	CAP, PPP 820P(ADJUST)
403	C218	5359-S010J821	CAP, PPP 820P(ADJUST)
404	C219	5359-S010J392	CAP, PPP 3900P
404	C220	5359-S010J392	CAP, PPP 3900P
414	C221	5359-S010J182	CAP, PPP 1800P
414	C222	5359-S010J182	CAP, PPP 1800P
405	C223	5359-S010J222	CAP, PPP 2200P
405	C224	5359-S010J222	CAP, PPP 2200P
406	C225	5359-S010J123	CAP, PPP .012μ
406	C226	5359-S010J123	CAP, PPP .012μ
407	C227	5354-124593	CAP, MYL .12μ
407	C228	5354-124593	CAP, MYL .12μ
437	C229	5359-3025851	CAP, PPP 3000P
437	C230	5359-3025851	CAP, PPP 3000P
409	C231	5359-S010J103	CAP, PPP .01μ
409	C232	5359-S010J103	CAP, PPP .01μ
410	C233	5345-105F0951	CAP, MINI ELE 1μ/50V
410	C234	5345-105F0951	CAP, MINI ELE 1μ/50V
413	C235	5345-227C041	CAP, MINI ELE 220μ/16V
413	C236	5345-227C041	CAP, MINI ELE 220μ/16V
411	C237	5345-225F0951	CAP, MINI ELE 2.2μ/50V
411	C238	5345-225F0951	CAP, MINI ELE 2.2μ/50V
416	C728	5345-106E041	CAP, MINI ELE 10μ/35V
412	C743	5345-107B041	CAP, MINI ELE 100μ/10V
417	C745	5345-477B041	CAP, MINI ELE 470μ/10V

RESISTORS

418	R201	5135-222522	RES, CBN 1/2P 2.2K
418	R202	5135-222522	RES, CBN 1/2P 2.2K
419	R203	5135-272522	RES, CBN 1/2P 2.7K
419	R204	5135-272522	RES, CBN 1/2P 2.7K
420	R205	5135-393522	RES, CBN 1/2P 39K
420	R206	5135-393522	RES, CBN 1/2P 39K
421	R207	5135-103522	RES, CBN 1/2P 10K
421	R208	5135-103522	RES, CBN 1/2P 10K
429	R213	5135-472522	RES, CBN 1/2P 4.7K
429	R214	5135-472522	RES, CBN 1/2P 4.7K
426	R215	5135-393522	RES, CBN 1/2P 39K
426	R216	5135-393522	RES, CBN 1/2P 39K
422	R217	5135-332522	RES, CBN 1/2P 3.3K
422	R218	5135-332522	RES, CBN 1/2P 3.3K
424	R219	5135-822522	RES, CBN 1/2P 8.2K
424	R220	5135-822522	RES, CBN 1/2P 8.2K
425	R221	5135-152522	RES, CBN 1/2P 1.5K
425	R222	5135-152522	RES, CBN 1/2P 1.5K
420	R225	5135-393522	RES, CBN 1/2P 39K
420	R226	5135-393522	RES, CBN 1/2P 39K
427	R227	5135-563522	RES, CBN 1/2P 56K
427	R228	5135-563522	RES, CBN 1/2P 56K
428	R229	5135-153522	RES, CBN 1/2P 15K
428	R230	5135-153522	RES, CBN 1/2P 15K
421	R231	5135-103522	RES, CBN 1/2P 10K
421	R232	5135-103522	RES, CBN 1/2P 10K
429	R233	5135-472522	RES, CBN 1/2P 4.7K
429	R234	5135-472522	RES, CBN 1/2P 4.7K
429	R235	5135-472522	RES, CBN 1/2P 4.7K
429	R236	5135-472522	RES, CBN 1/2P 4.7K
430	R237	5135-104522	RES, CBN 1/2P 100K
430	R238	5135-104522	RES, CBN 1/2P 100K
418	R239	5135-222522	RES, CBN 1/2P 2.2K
418	R240	5135-222522	RES, CBN 1/2P 2.2K
423	R241	5135-273522	RES, CBN 1/2P 27K
423	R242	5135-273522	RES, CBN 1/2P 27K
427	R243	5135-563522	RES, CBN 1/2P 56K
427	R244	5135-563522	RES, CBN 1/2P 56K
421	R245	5135-103522	RES, CBN 1/2P 10K
421	R246	5135-103522	RES, CBN 1/2P 10K
433	R247	5135-102522	RES, CBN 1/2P 1K
433	R248	5135-102522	RES, CBN 1/2P 1K
431	R249	5135-121522	RES, CBN 1/2P 120
431	R250	5135-121522	RES, CBN 1/2P 120
418	R251	5135-222522	RES, CBN 1/2P 2.2K
418	R252	5135-222522	RES, CBN 1/2P 2.2K
418	R253	5135-222522	RES, CBN 1/2P 2.2K
418	R254	5135-222522	RES, CBN 1/2P 2.2K
432	R255	5135-331522	RES, CBN 1/2P 330
432	R256	5135-331522	RES, CBN 1/2P 330
435	R257	5135-221522	RES, CBN 1/2P 220
435	R258	5135-221522	RES, CBN 1/2P 220
430	R259	5135-104522	RES, CBN 1/2P 100K
436	R261	5135-473522	RES, CBN 1/2P 47K
436	R262	5135-473522	RES, CBN 1/2P 47K
436	R263	5135-473522	RES, CBN 1/2P 47K
436	R264	5135-473522	RES, CBN 1/2P 47K
436	R265	5135-473522	RES, CBN 1/2P 47K
436	R266	5135-473522	RES, CBN 1/2P 47K
709	R752	5135-221522	RES, CBN 1/2P 220
710	R753	5135-472522	RES, CBN 1/2P 4.7K

Ser. No.	Ref. No.	Part No.	Description
710	R754	5135-472522	RES, CBN 1/2P 4.7K
		INTEGRATED CIRCUITS	
391	IC201	5653-UPC4570C	IC, LINEAR
664	IC703	5654-TC4051BP	IC, DIGITAL
		TRANSISTORS	
393	Q201	5613-C114YS	XISTOR, NPN R
393	Q202	5613-C114YS	XISTOR, NPN R
393	Q203	5613-C114YS	XISTOR, NPN R
393	Q204	5613-C114YS	XISTOR, NPN R
393	Q205	5613-C114YS	XISTOR, NPN R
393	Q206	5613-C114YS	XISTOR, NPN R
393	Q207	5613-C114YS	XISTOR, NPN R
393	Q208	5613-C114YS	XISTOR, NPN R
393	Q209	5613-C114YS	XISTOR, NPN R
393	Q210	5613-C114YS	XISTOR, NPN R
393	Q211	5613-C114YS	XISTOR, NPN R
393	Q212	5613-C114YS	XISTOR, NPN R
394	Q213	5613-2878(B)	XISTOR, NPN R
394	Q214	5613-2878(B)	XISTOR, NPN R
392	Q215	5613-C114TS	XISTOR, NPN R
392	Q216	5613-C114TS	XISTOR, NPN R
392	Q217	5613-C114TS	XISTOR, NPN R
392	Q218	5613-C114TS	XISTOR, NPN R
681	Q731	5611-A124ES	XISTOR, PNP R
683	Q756	5613-C114YS	XISTOR, NPN R
678	Q757	5613-C114TS	XISTOR, NPN R
		COILS	
395	L201	5932-11501	COIL CASE, 7
395	L202	5932-11501	COIL CASE, 7
395	L203	5932-11501	COIL CASE, 7
395	L204	5932-11501	COIL CASE, 7
		CONTROLS	
397	VR201	5101-S0801502	RES, SEMI FIX 5K
397	VR202	5101-S0801502	RES, SEMI FIX 5K
		MISCELLANEOUS	
835	CN203	4443-01701006	CONNECTOR
835	CN204	4443-01701006	CONNECTOR
799	CN205	4443-030185	CONNECTOR
799	CN206	4443-030185	CONNECTOR
799	CN207	4443-030185	CONNECTOR
783	TP201	4214-132	TERMINAL
783	TP202	4214-132	TERMINAL

PCB-4 POWER P. C. BOARD

Ser. No.	Ref. No.	Part No.	Description
		CAPACITORS	
605 ⚠	C1	5352-S010M103	CAP, MTL .01μ
606	C2	5352-S060K104	CAP, MTL .1μ
606	C3	5352-S060K104	CAP, MTL .1μ
606	C4	5352-S060K104	CAP, MTL .1μ
593	C5	5345-228D041	CAP, MINI ELE 2200μ/25V
593	C6	5345-228D041	CAP, MINI ELE 2200μ/25V
594	C7	5345-477C041	CAP, MINI ELE 470μ/16V
594	C8	5345-477C041	CAP, MINI ELE 470μ/16V
595	C9	5345-108C041	CAP, MINI ELE 1000μ/16V
595	C10	5345-108C041	CAP, MINI ELE 1000μ/16V
606	C11	5352-S060K104	CAP, MTL .1μ
597	C12	5345-477C041	CAP, MINI ELE 470μ/16V
595	C13	5345-108C041	CAP, MINI ELE 1000μ/16V
594	C14	5345-477C041	CAP, MINI ELE 470μ/16V
598	C15	5345-108C041	CAP, MINI ELE 1000μ/16V
596	C16	5341-109D0958	CAP, ELE 10000μ/25V
599	C17	5345-477E041	CAP, MINI ELE 470μ/35V
600	C18	5345-226F041	CAP, MINI ELE 22μ/50V
600	C51	5345-226F041	CAP, MINI ELE 22μ/50V
601	C52	5345-106F041	CAP, MINI ELE 10μ/50V
601	C53	5345-106F041	CAP, MINI ELE 10μ/50V
602	C54	5345-337C041	CAP, MINI ELE 330μ/16V
603	C71	5345-107B041	CAP, MINI ELE 100μ/10V
901	C801	5359-S010J103	CAP, PPP .01μ
906	C802	5345-106E041	CAP, MINI ELE 10μ/35V
		RESISTORS	
042B ⚠	R1	5135-335522	RES, CBN 1/2P 3.3M IB
607	R3	5135-152522	RES, CBN 1/2P 1.5K
607	R4	5135-152522	RES, CBN 1/2P 1.5K
608	R5	5135-471522	RES, CBN 1/2P 470
608	R6	5135-471522	RES, CBN 1/2P 470
609	R7	5135-101522	RES, CBN 1/2P 100
609	R8	5135-101522	RES, CBN 1/2P 100
610	R9	5135-2R7522	RES, CBN 1/2P 2.7
610	R10	5135-2R7522	RES, CBN 1/2P 2.7
607	R11	5135-152522	RES, CBN 1/2P 1.5K
608	R12	5135-471522	RES, CBN 1/2P 470
609	R13	5135-101522	RES, CBN 1/2P 100
607	R15	5135-152522	RES, CBN 1/2P 1.5K
608	R16	5135-471522	RES, CBN 1/2P 470
609	R17	5135-101522	RES, CBN 1/2P 100
610	R18	5135-2R7522	RES, CBN 1/2P 2.7
611	R19	5135-221522	RES, CBN 1/2P 220
612	R20	5135-223522	RES, CBN 1/2P 22K
612	R21	5135-223522	RES, CBN 1/2P 22K
618	R51	5135-331522	RES, CBN 1/2P 330
619	R52	5135-562522	RES, CBN 1/2P 5.6K
620	R53	5135-564522	RES, CBN 1/2P 560K
621	R54	5135-102522	RES, CBN 1/2P 1K
621	R55	5135-102522	RES, CBN 1/2P 1K
622	R56	5135-104522	RES, CBN 1/2P 100K
623	R57	5135-103522	RES, CBN 1/2P 10K
624	R58	5135-182522	RES, CBN 1/2P 1.8K
618	R59	5135-331522	RES, CBN 1/2P 330
621	R71	5135-102522	RES, CBN 1/2P 1K
625	R72	5135-471522	RES, CBN 1/2P 470
623	R73	5135-103522	RES, CBN 1/2P 10K
621	R74	5135-102522	RES, CBN 1/2P 1K
916 ⚠	R801	5102-1005116	RES, FUSE 10
918	R803	5135-103522	RES, CBN 1/2P 10K
919	R804	5135-150522	RES, CBN 1/2P 15
919	R805	5135-150522	RES, CBN 1/2P 15
919	R806	5135-150522	RES, CBN 1/2P 15
919	R807	5135-150522	RES, CBN 1/2P 15
918	R810	5135-103522	RES, CBN 1/2P 10K
932	R811	5174-S010F243	RES, MTL 1/4P 24K
928	R812	5174-S010F113	RES, MTL 1/4P 11K
917	R814	5135-222522	RES, CBN 1/2P 2.2K
920	R815	5135-223522	RES, CBN 1/2P 22K
917	R816	5135-222522	RES, CBN 1/2P 2.2K
920	R817	5135-223522	RES, CBN 1/2P 22K
921	R818	5135-471522	RES, CBN 1/2P 470
918	R819	5135-103522	RES, CBN 1/2P 10K
918	R820	5135-103522	RES, CBN 1/2P 10K
933	R821	5135-224522	RES, CBN 1/2P 220K
		INTEGRATED CIRCUIT	
873	IC801	5653-BA6229	IC, LINEAR
		TRANSISTORS	
571	Q1	5612-1375	XISTOR, PNP A
572	Q2	5614-2012	XISTOR, NPN A
574	Q3	5613-2320(F)	XISTOR, NPN R
573	Q4	5611-999(F)	XISTOR, PNP R
574	Q5	5613-2320(F)	XISTOR, NPN R
573	Q6	5611-999(F)	XISTOR, PNP R
571	Q7	5612-1375	XISTOR, PNP A
574	Q8	5613-2320(F)	XISTOR, NPN R
571	Q10	5612-1375	XISTOR, PNP A
574	Q11	5613-2320(F)	XISTOR, NPN R
574	Q12	5613-2320(F)	XISTOR, NPN R
575	Q51	5611-999(F)	XISTOR, PNP R
576	Q71	5613-2320(F)	XISTOR, NPN R
577	Q72	5611-A124ES	XISTOR, PNP R
881	Q801	5613-C114YS	XISTOR, NPN R
879	Q802	5613-2925(T)	XISTOR, NPN R
876	Q803	5611-999(F)	XISTOR, PNP R
879	Q804	5613-2925(T)	XISTOR, NPN R
879	Q805	5613-2925(T)	XISTOR, NPN R
884	Q806	5613-1740S(S)	XISTOR, NPN R
886	Q807	5613-2320(F)	XISTOR, NPN R

Ser. No.	Ref. No.	Part No.	Description
886	Q808	5613-2320(F)	XISTOR, NPN R
886	Q809	5613-2320(F)	XISTOR, NPN R
		DIODES	
579	⚠ D1	5632-S5566B	DIODE, RECT
579	⚠ D2	5632-S5566B	DIODE, RECT
579	⚠ D3	5632-S5566B	DIODE, RECT
579	⚠ D4	5632-S5566B	DIODE, RECT
579	⚠ D7	5632-S5566B	DIODE, RECT
579	⚠ D8	5632-S5566B	DIODE, RECT
581	D9	5635-HZ12B2L	DIODE, ZENER
581	D10	5635-HZ12B2L	DIODE, ZENER
581	D11	5635-HZ12B2L	DIODE, ZENER
582	D12	5635-HZ6B2L	DIODE, ZENER
583	D13	5635-HZ22-2L	DIODE, ZENER
584	D14	5635-RD5R1EB3	DIODE, ZENER
579	⚠ D15	5632-S5566B	DIODE, RECT
579	⚠ D16	5632-S5566B	DIODE, RECT
579	⚠ D17	5632-S5566B	DIODE, RECT
579	⚠ D18	5632-S5566B	DIODE, RECT
700	⚠ D51	5632-S5566B	DIODE, RECT
700	⚠ D52	5632-S5566B	DIODE, RECT
685	D53	5631-1S2473	DIODE, DET
689	D54	5635-RD5R1EB2	DIODE, ZENER
688	D55	5635-HZ11A2L	DIODE, ZENER
700	D56	5632-S5566B	DIODE, RECT
700	D57	5632-S5566B	DIODE, RECT
686	D58	5635-HZ16-2L	DIODE, ZENER
687	D71	5635-HZ3B2	DIODE, ZENER
892	D801	5632-S5566B	DIODE, RECT
890	D802	5635-HZ5C2	DIODE, ZENER
888	D803	5635-HZ7C3	DIODE, ZENER
		TRANSFORMERS	
591	⚠ T1	5584-S9401	XFORMER, POWER BK
591B	⚠ T1	5584-S9402	XFORMER, POWER IB
		CONTROLS	
914	VR801	5101-S0801103	RES, SEMI FIX 10K
914	VR802	5101-S0801103	RES, SEMI FIX 10K
912	VR803	5101-S0801502	RES, SEMI FIX 5K
		MISCELLANEOUS	
797	CN801	4443-060185	CONNECTOR
798	CN802	4443-070185	CONNECTOR
798	CN803	4443-070185	CONNECTOR
796	CN804	4443-050185	CONNECTOR
796	CN805	4443-050185	CONNECTOR
614	⚠ F1	5732-801031	FUSE BK
614B	⚠ F1	5732-251030	FUSE IB
615	⚠ F2	5732-202031	FUSE BK
615B	⚠ F2	5732-202030	FUSE IB
613	⚠ HL1	4472-04501	HOLDER, FUSE
613	⚠ HL2	4472-04501	HOLDER, FUSE
613	⚠ HL3	4472-04501	HOLDER, FUSE
613	⚠ HL4	4472-04501	HOLDER, FUSE
804	LCN801	4163-S0206101	CONNECTOR W/W
803	LCN802	4163-S0205101	CONNECTOR W/W
805	LCN803	4163-S0207101	CONNECTOR W/W
908	RC701	5212-S0305273	R COMPOSITE
907	RC702	5212-S0303273	R COMPOSITE
751	⚠ SW1	4433-01301	SWITCH, PU-PW
041B	⚠ SW2	4411-00501102	SWITCH, ROTARY IB
786	TM1	4214-122	TERMINAL
786	TM2	4214-122	TERMINAL

PCB-5 FRONT P. C. BOARD

Ser. No.	Ref. No.	Part No.	Description
		CAPACITORS	
849	C901	5345-106D0356	CAP, MINI ELE 10μ/25V
852	C902	5359-S010J103	CAP, PPP .01μ
850	C903	5345-476C0356	CAP, MINI ELE 47μ/16V
		RESISTORS	
862	R901	5135-101522	RES, CBN 1/2P 100
866	R902	5135-102522	RES, CBN 1/2P 1K
858	R903	5135-221522	RES, CBN 1/2P 220
858	R904	5135-221522	RES, CBN 1/2P 220
859	R905	5135-472522	RES, CBN 1/2P 4.7K
860	R906	5135-682522	RES, CBN 1/2P 6.8K
861	R907	5135-183522	RES, CBN 1/2P 18K
859	R908	5135-472522	RES, CBN 1/2P 4.7K
860	R909	5135-682522	RES, CBN 1/2P 6.8K
861	R910	5135-183522	RES, CBN 1/2P 18K
		INTEGRATED CIRCUIT	
841	IC901	5654-MN187167	IC, DIGITAL
		MISCELLANEOUS	
787	CN901	4443-0301140	CONNECTOR
788	CN902	4443-0601140	CONNECTOR
793	CN903	4443-05401030	CONNECTOR
765	FL901	5722-058	TUBE DISPLAY
855	RC901	5212-S0307123	R COMPOSITE
845	RCV901	6143-00802	RECEIVE BLOCK
752	S901	4437-00704	SWITCH, PU-TC
752	S902	4437-00704	SWITCH, PU-TC
752	S903	4437-00704	SWITCH, PU-TC
752	S904	4437-00704	SWITCH, PU-TC
752	S905	4437-00704	SWITCH, PU-TC
752	S906	4437-00704	SWITCH, PU-TC
752	S907	4437-00704	SWITCH, PU-TC
752	S908	4437-00704	SWITCH, PU-TC
847	X901	5693-CST4MGW	OSC, CER

PCB-6 CONT SW-L P. C. BOARD

Ser. No.	Ref. No.	Part No.	Description
		RESISTORS	
863	R911	5135-472522	RES, CBN 1/2P 4.7K
864	R912	5135-682522	RES, CBN 1/2P 6.8K
863	R913	5135-472522	RES, CBN 1/2P 4.7K
864	R914	5135-682522	RES, CBN 1/2P 6.8K
865	R915	5135-183522	RES, CBN 1/2P 18K
		MISCELLANEOUS	
809	LCN901	4163-S0103500	CONNECTOR W/W
753	S909	4437-01301	SWITCH, PU-TC
753	S910	4437-01301	SWITCH, PU-TC
753	S911	4437-01301	SWITCH, PU-TC
754	S912	4437-00704	SWITCH, PU-TC
753	S913	4437-01301	SWITCH, PU-TC
753	S914	4437-01301	SWITCH, PU-TC
754	S915	4437-00704	SWITCH, PU-TC

PCB-7 CONT SW-R P. C. BOARD

Ser. No.	Ref. No.	Part No.	Description
		RESISTORS	
867	R916	5135-472522	RES, CBN 1/2P 4.7K
868	R917	5135-682522	RES, CBN 1/2P 6.8K
869	R918	5135-183522	RES, CBN 1/2P 18K
		MISCELLANEOUS	
810	LCN902	4163-S0106800	CONNECTOR W/W
843	LED901	5637-SEL2410E	LED
843	LED902	5637-SEL2410E	LED
755	S916	4437-01301	SWITCH, PU-TC
756	S917	4437-00704	SWITCH, PU-TC
755	S918	4437-01301	SWITCH, PU-TC
755	S919	4437-01301	SWITCH, PU-TC
755	S920	4437-01301	SWITCH, PU-TC
755	S921	4437-01301	SWITCH, PU-TC

PCB-8 DOLBY P. C. BOARD

Ser. No.	Ref. No.	Part No.	Description
		CAPACITORS	
361	C101	5353-101534	CAP, MCA 100P
361	C102	5353-101534	CAP, MCA 100P
357	C103	5345-106C0951	CAP, MINI ELE 10μ/16V
357	C104	5345-106C0951	CAP, MINI ELE 10μ/16V
358	C105	5345-227B0952	CAP, MINI ELE 220μ/10V
358	C106	5345-227B0952	CAP, MINI ELE 220μ/10V
362	C107	5359-6825851	CAP, PPP 6800P

Ser. No.	Ref. No.	Part No.	Description
362	C108	5359-6825851	CAP, PPP 6800P
362	C109	5359-6825851	CAP, PPP 6800P
362	C110	5359-6825851	CAP, PPP 6800P
357	C111	5345-106C0951	CAP, MINI ELE 10μ/16V
357	C112	5345-106C0951	CAP, MINI ELE 10μ/16V
365	C113	5359-S010J123	CAP, PPP .012μ
365	C114	5359-S010J123	CAP, PPP .012μ
366	C115	5359-S010J272	CAP, PPP 2700P
366	C116	5359-S010J272	CAP, PPP 2700P
360	C117	5345-477C041	CAP, MINI ELE 470μ/16V
359	C118	5345-336C041	CAP, MINI ELE 33μ/16V
640	C501	5345-106C0951	CAP, MINI ELE 10μ/16V
640	C502	5345-106C0951	CAP, MINI ELE 10μ/16V
640	C505	5345-106C0951	CAP, MINI ELE 10μ/16V
640	C506	5345-106C0951	CAP, MINI ELE 10μ/16V
644	C507	5359-S010J222	CAP, PPP 2200P
644	C508	5359-S010J222	CAP, PPP 2200P
644	C509	5359-S010J222	CAP, PPP 2200P
644	C510	5359-S010J222	CAP, PPP 2200P
642	C511	5354-564593	CAP, MYL .56μ
642	C512	5354-564593	CAP, MYL .56μ
643	C513	5354-334593	CAP, MYL .33μ
643	C514	5354-334593	CAP, MYL .33μ
640	C515	5345-106C0951	CAP, MINI ELE 10μ/16V
640	C516	5345-106C0951	CAP, MINI ELE 10μ/16V
641	C517	5345-227B041	CAP, MINI ELE 220μ/10V
641	C518	5345-227B041	CAP, MINI ELE 220μ/10V
667	C519	5345-476D041	CAP, MINI ELE 47μ/25V
639	C527	5345-106C0951	CAP, MINI ELE 10μ/16V
639	C528	5345-106C0951	CAP, MINI ELE 10μ/16V
640	C531	5345-106C0951	CAP, MINI ELE 10μ/16V
640	C532	5345-106C0951	CAP, MINI ELE 10μ/16V
644	C533	5359-S010J222	CAP, PPP 2200P
644	C534	5359-S010J222	CAP, PPP 2200P
644	C535	5359-S010J222	CAP, PPP 2200P
644	C536	5359-S010J222	CAP, PPP 2200P
642	C537	5354-564593	CAP, MYL .56μ
642	C538	5354-564593	CAP, MYL .56μ
643	C539	5354-334593	CAP, MYL .33μ
643	C540	5354-334593	CAP, MYL .33μ
640	C541	5345-106C0951	CAP, MINI ELE 10μ/16V
640	C542	5345-106C0951	CAP, MINI ELE 10μ/16V
641	C543	5345-227B041	CAP, MINI ELE 220μ/10V
641	C544	5345-227B041	CAP, MINI ELE 220μ/10V
667	C545	5345-476D041	CAP, MINI ELE 47μ/25V
639	C551	5345-106C0951	CAP, MINI ELE 10μ/16V
639	C552	5345-106C0951	CAP, MINI ELE 10μ/16V
639	C553	5345-106C0951	CAP, MINI ELE 10μ/16V
639	C554	5345-106C0951	CAP, MINI ELE 10μ/16V
645	C557	5359-S010J182	CAP, PPP 1800P
645	C558	5359-S010J182	CAP, PPP 1800P
644	C559	5359-S010J222	CAP, PPP 2200P
644	C560	5359-S010J222	CAP, PPP 2200P
		RESISTORS	
368	R101	5232-470J16P	RES, CBN 1/6P 47
368	R102	5232-470J16P	RES, CBN 1/6P 47
369	R105	5178-223481	RES, MTL 1/6P 22K
369	R106	5178-223481	RES, MTL 1/6P 22K
370	R107	5178-331481	RES, MTL 1/6P 330
370	R108	5178-331481	RES, MTL 1/6P 330
371	R109	5232-224J16P	RES, CBN 1/6P 220K
371	R110	5232-224J16P	RES, CBN 1/6P 220K
372	R111	5232-332J16P	RES, CBN 1/6P 3.3K
372	R112	5232-332J16P	RES, CBN 1/6P 3.3K
373	R113	5232-562J16P	RES, CBN 1/6P 5.6K
373	R114	5232-562J16P	RES, CBN 1/6P 5.6K
368	R115	5232-470J16P	RES, CBN 1/6P 47
368	R116	5232-470J16P	RES, CBN 1/6P 47
375	R117	5232-681J16P	RES, CBN 1/6P 680
375	R118	5232-681J16P	RES, CBN 1/6P 680
376	R119	5232-684J16P	RES, CBN 1/6P 680K
376	R120	5232-684J16P	RES, CBN 1/6P 680K
377	R121	5232-101J16P	RES, CBN 1/6P 100
377	R122	5232-101J16P	RES, CBN 1/6P 100
378	R123	5232-102J16P	RES, CBN 1/6P 1K
378	R124	5232-102J16P	RES, CBN 1/6P 1K
379	R125	5232-822J16P	RES, CBN 1/6P 8.2K
379	R126	5232-822J16P	RES, CBN 1/6P 8.2K
382	R129	5232-101J16P	RES, CBN 1/6P 100
382	R130	5232-101J16P	RES, CBN 1/6P 100
381	R131	5232-561J16P	RES, CBN 1/6P 560
381	R132	5232-561J16P	RES, CBN 1/6P 560
383	R133	5232-103J16P	RES, CBN 1/6P 10K
383	R134	5232-103J16P	RES, CBN 1/6P 10K
384	R135	5232-392J16P	RES, CBN 1/6P 3.9K
384	R136	5232-392J16P	RES, CBN 1/6P 3.9K
383	R139	5232-103J16P	RES, CBN 1/6P 10K
383	R140	5232-103J16P	RES, CBN 1/6P 10K
385	R141	5232-104J16P	RES, CBN 1/6P 100K
385	R142	5232-104J16P	RES, CBN 1/6P 100K
386	R148	5135-4R7522	RES, CBN 1/2P 4.7
387	R149	5135-102522	RES, CBN 1/2P 1K
654	R501	5232-221J16P	RES, CBN 1/6P 220
654	R502	5232-221J16P	RES, CBN 1/6P 220
654	R503	5232-221J16P	RES, CBN 1/6P 220
654	R504	5232-221J16P	RES, CBN 1/6P 220
649	R507	5232-243J16P	RES, CBN 1/6P 24K
649	R508	5232-243J16P	RES, CBN 1/6P 24K
650	R509	5232-561J16P	RES, CBN 1/6P 560
650	R510	5232-561J16P	RES, CBN 1/6P 560
651	R511	5232-273J16P	RES, CBN 1/6P 27K
657	R512	5232-102J16P	RES, CBN 1/6P 1K
655	R517	5232-223J16P	RES, CBN 1/6P 22K
652	R518	5232-123J16P	RES, CBN 1/6P 12K
648	R519	5135-682522	RES, CBN 1/2P 6.8K
648	R520	5135-682522	RES, CBN 1/2P 6.8K
647	R521	5135-392522	RES, CBN 1/2P 3.9K
647	R522	5135-392522	RES, CBN 1/2P 3.9K
654	R527	5232-221J16P	RES, CBN 1/6P 220
654	R528	5232-221J16P	RES, CBN 1/6P 220
654	R529	5232-221J16P	RES, CBN 1/6P 220
654	R530	5232-221J16P	RES, CBN 1/6P 220
649	R533	5232-243J16P	RES, CBN 1/6P 24K
649	R534	5232-243J16P	RES, CBN 1/6P 24K
650	R535	5232-561J16P	RES, CBN 1/6P 560
650	R536	5232-561J16P	RES, CBN 1/6P 560
651	R537	5232-273J16P	RES, CBN 1/6P 27K
657	R538	5232-102J16P	RES, CBN 1/6P 1K
655	R543	5232-223J16P	RES, CBN 1/6P 22K
652	R544	5232-123J16P	RES, CBN 1/6P 12K
648	R545	5135-682522	RES, CBN 1/2P 6.8K
648	R546	5135-682522	RES, CBN 1/2P 6.8K
647	R547	5135-392522	RES, CBN 1/2P 3.9K
647	R548	5135-392522	RES, CBN 1/2P 3.9K
657	R551	5232-102J16P	RES, CBN 1/6P 1K
657	R552	5232-102J16P	RES, CBN 1/6P 1K
657	R553	5232-102J16P	RES, CBN 1/6P 1K
657	R554	5232-102J16P	RES, CBN 1/6P 1K
653	R557	5232-332J16P	RES, CBN 1/6P 3.3K
653	R558	5232-332J16P	RES, CBN 1/6P 3.3K
656	R559	5232-105J16P	RES, CBN 1/6P 1M
656	R560	5232-105J16P	RES, CBN 1/6P 1M
656	R561	5232-105J16P	RES, CBN 1/6P 1M
656	R562	5232-105J16P	RES, CBN 1/6P 1M
646	R563	5232-103J16P	RES, CBN 1/6P 10K
646	R564	5232-103J16P	RES, CBN 1/6P 10K
658	R565	5232-104J16P	RES, CBN 1/6P 100K
630	R566	5135-104522	RES, CBN 1/2P 100K
659	R569	5232-563J16P	RES, CBN 1/6P 56K
659	R570	5232-563J16P	RES, CBN 1/6P 56K
652	R571	5232-123J16P	RES, CBN 1/6P 12K
652	R572	5232-123J16P	RES, CBN 1/6P 12K
670	R573	5232-222J16P	RES, CBN 1/6P 2.2K
670	R574	5232-222J16P	RES, CBN 1/6P 2.2K
716	R705	5232-103J16P	RES, CBN 1/6P 10K
716	R706	5232-103J16P	RES, CBN 1/6P 10K
717	R725	5232-473J16P	RES, CBN 1/6P 47K
717	R726	5232-473J16P	RES, CBN 1/6P 47K
		INTEGRATED CIRCUITS	
631	IC501	5653-CXA1330S	IC, LINEAR

Ser. No.	Ref. No.	Part No.	Description
631	IC551	5653-CXA1330S	IC, LINEAR
661	IC701	5654-TC4066BP	IC, DIGITAL
663	IC702	5654-LC4966	IC, DIGITAL
		TRANSISTORS	
347	Q101	5613-1775(F)	XISTOR, NPN R
347	Q102	5613-1775(F)	XISTOR, NPN R
347	Q103	5613-1775(F)	XISTOR, NPN R
347	Q104	5613-1775(F)	XISTOR, NPN R
348	Q105	5613-2320L(F)	XISTOR, NPN R
348	Q106	5613-2320L(F)	XISTOR, NPN R
349	Q107	5613-C114YS	XISTOR, NPN R
349	Q108	5613-C114YS	XISTOR, NPN R
350	Q109	5613-2878(B)	XISTOR, NPN R
350	Q110	5613-2878(B)	XISTOR, NPN R
352	Q112	5613-2320(F)	XISTOR, NPN R
634	Q505	5613-C114YS	XISTOR, NPN R
633	Q506	5611-A114YS	XISTOR, PNP R
632	Q507	5611-950(Y)	XISTOR, PNP R
635	Q508	5613-2120(Y)	XISTOR, NPN R
634	Q531	5613-C114YS	XISTOR, NPN R
633	Q532	5611-A114YS	XISTOR, PNP R
632	Q533	5611-950(Y)	XISTOR, PNP R
635	Q534	5613-2120(Y)	XISTOR, NPN R
669	Q551	5613-2320L(F)	XISTOR, NPN R
669	Q552	5613-2320L(F)	XISTOR, NPN R
634	Q553	5613-C114YS	XISTOR, NPN R
634	Q554	5613-C114YS	XISTOR, NPN R
634	Q555	5613-C114YS	XISTOR, NPN R
634	Q556	5613-C114YS	XISTOR, NPN R
634	Q560	5613-C114YS	XISTOR, NPN R
633	Q561	5611-A114YS	XISTOR, PNP R
666	Q705	5613-2878(B)	XISTOR, NPN R
666	Q706	5613-2878(B)	XISTOR, NPN R
668	Q721	5611-A124ES	XISTOR, PNP R
668	Q722	5611-A124ES	XISTOR, PNP R
679	Q723	5613-C124ES	XISTOR, NPN R
679	Q724	5613-C124ES	XISTOR, NPN R
690	Q730	5613-C114TS	XISTOR, NPN R
		DIODES	
353	D101	5635-HZ11B2L	DIODE, ZENER
345	D104	5631-1SS133	DIODE, DET
		COILS	
354	L101	5995-S160J472	COIL W/CORE
354	L102	5995-S160J472	COIL W/CORE
		CONTROLS	
355	VR101	5101-S0801203	RES, SEMI FIX 20K
355	VR102	5101-S0801203	RES, SEMI FIX 20K
356	VR103	5101-S0801501	RES, SEMI FIX 500
356	VR104	5101-S0801501	RES, SEMI FIX 500
638	VR551	5101-S0801103	RES, SEMI FIX 10K
638	VR552	5101-S0801103	RES, SEMI FIX 10K
		MISCELLANEOUS	
833	CN501	4443-01701017	CONNECTOR
839	CN502	4443-01701016	CONNECTOR
637	LC501	5214-13701	LC COMPOSITE
637	LC502	5214-13701	LC COMPOSITE
636	LC503	5214-13801	LC COMPOSITE
636	LC504	5214-13801	LC COMPOSITE
785	TP101	4214-132	TERMINAL
785	TP102	4214-132	TERMINAL

PCB-9 REC MUTE P. C. BOARD

		RESISTORS	
720	R779	5232-223J16P	RES, CBN 1/6P 22K
		TRANSISTOR	
693	Q763	5613-C124ES	XISTOR,NPN R
694	Q764	5611-C124ES	XISTOR,PNP R

Ser No.	Ref.No.	Part No.	Description
		DIODES	
536	D711	5631-1SS133	DIODE, DET
536	D712	5631-1SS133	DIODE, DET
536	D713	5631-1SS133	DIODE, DET
536	D714	5631-1SS133	DIODE, DET

ABBREVIATIONS IN PARTS LIST

CAPACITORS

CAP, MINI ELE	:	Electrolytic
CAP, CER	:	Ceramic
CAP, PPP	:	Polypropylene
CAP, MYL	:	Mylar
CAP, MCA	:	Mica
470µ	:	470µF
6800P	:	6800pF
.047µ	:	0.047µF

RESISTORS

RES, CBN	1/6P	:	Carbon 1/6W
	2.2K	:	2.2kΩ
	220	:	220Ω
RES, FUSE		:	Fuse
RES, CEM	5P	:	Cement 5W
RES, MTL	1P	:	Metal 1W

TRANSISTORS

XISTOR	:	Transistor
FET	:	Field Effect Transistor

CONTROLS

RES, V CBN	:	Variable Carbon Resistor
RES, SEMI FIX	:	Semi - fixed Resistors

CHASSIS MISCELLANEOUS

766 ⚠	P1	4161-71151	CORD W/PLUG BK
766B ⚠	P1	4161-7256	CORD W/PLUG IB
767		4161-71184	CORD W/PLUG, RCA TYPE (ACCESSORY) (x2)
789	LUG1	4211-4	LUG, CABINET FRONT
789	LUG2	4211-4	LUG, CABINET FRONT
814	JL901	4242-S0330151	JUMPER LEAD

PACKAGE PARTS LIST

021B	1756-03108	LABEL (x2) IB
022B	1756-06304	LABEL IB
109	1111-J30355	OWNER GUIDE BK
109B	1111-J30356	OWNER GUIDE IB
110	1113-02501	OWNER CARD BK
112	1116-03801	WARRANTY CARD BK
113	1119-04501	ATTACH SHEET, SERVICE STATION BK
114	1119-01201	ATTACH SHEET, SAFETY BK
117A	1221-30205	CARTON BOX
118	1222-7384	CUSHION, R
119	1222-7385	CUSHION, L
121	1223-R0220055	SOFT SHEET, SET FRONT
122	1223-00403012	SOFT SHEET, CASS. LID (x2)
123	1241-R0160600	POLYETHY BAG, SET
124	1241-R0123350	POLYETHY BAG, OG
768	6142-02707	CONTROL UNIT
769	4191-0355	BATTERY, DAY

NOTE:

⚠ SAFETY RELATED COMPONENT. USE ONLY EXACT REPLACEMENT PART AS SPECIFIED.

IC BLOCK DIAGRAM

IC301, IC302 : µPC1297CA
Dolby HX Pro

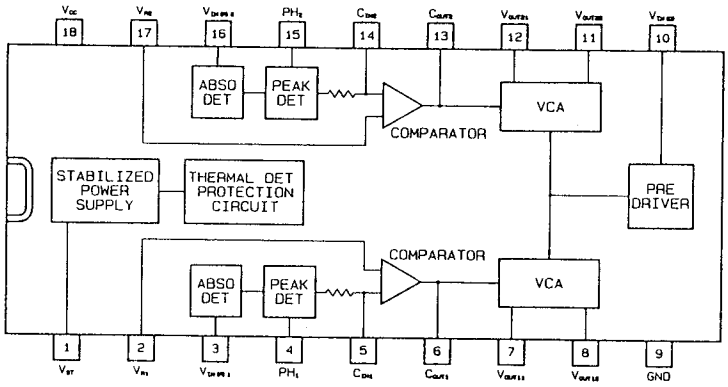

IC501, IC551 : CXA1330S
Dolby B/C NR

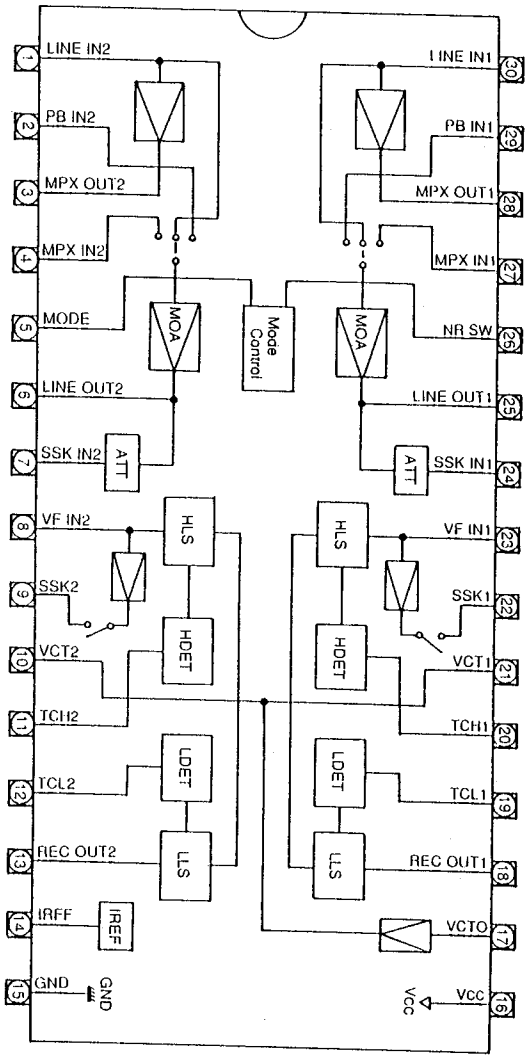

IC402 : BA6138
Signal Level Meter

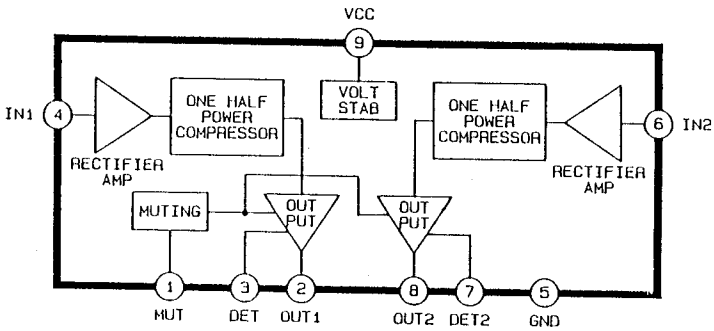

IC801, 802 : BA6229
Motor Driver

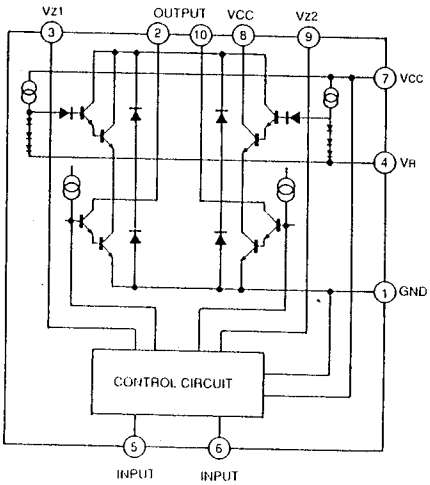

IC703 : TC4051BP

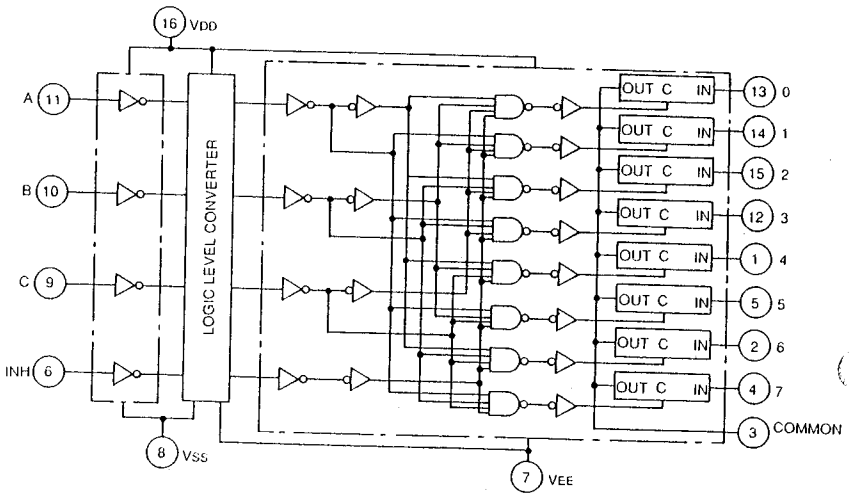

IC751 : MN15542
Logic Control Block

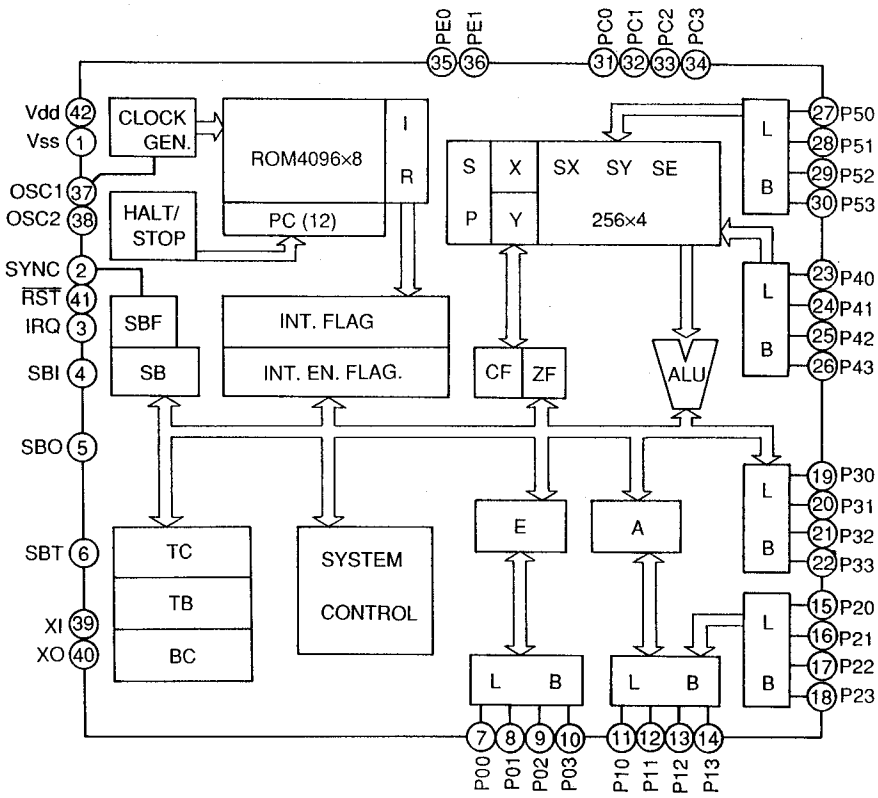

TERMINAL FUNCTIONS

NO.	Name	Functional Name	I/O	Description
1	Vss	Vss		GND
2	SYNC			Not used
3	IRQ	STB IN	I	STB input from MAIN
4	SBI	DATA IN	I	Data input from MAIN
5				
6	SBT	CLK IN/OUT	I/O	Clock input/output for data communication with SUB
7	P00	SEC-RE MUTE	O	SEC playback mute output
8	P01	SEC-REC MUTE	O	SEC REC mute output
9	P02	SEC-REC	O	SEC REC change-over output
10	P03	SEC-BIAS	O	SEC bias drive output
11	P10	PRO-PB MUTE	O	PRI playback mute output
.12	P11	PRI-REC MUTE	O	PRI recording mute output
13	P12	PRI-REC	O	PRI recording mute change-over
14	P13	PRI-BIAS	O	PRI bias drive output
15	P20	PRI-RPC	O	PRI reel motor drive voltage change-over
16	P21	PRI-RM2	O	PRI reel motor reverse drive output
17	P22	PRI-RM2	O	PRI reel motor forward DRIVE output
18	P30	PRI-SOLP	O	PRI solenoid retaining power
19	P23	PRI-SOL	O	PRI solenoid trigger output
20	P31	PRI-CPM	O	PRI capstan motor drive output
21	P32	PRI-MMS	O	PRI capstan motor rpm change-over

NO.	Name	Functional Name	I/O	Description
22	P33	LINE MUTE	O	Line mute output
23	P40	SEC-RPC	O	SEC reel motor drive voltage change-over
24	P41	SEC-RM2	O	SEC reel motor reverse drive output
25	P42	SEC-RM1	O	SEC reel motor forward drive output
26	P43	SEC-SOLP	O	SEC solenoid retaining output
27	P50	SEC-SOL	O	SEC solenoid trigger output
28	P51	SEC-CPM	O	SEC capstan motor drive output
29	P52	SEC-MMS	O	SEC capstan motor rpm change-over
30	P53	HI SPD	O	EQ change-over at hight-speed copy
31	PC0	PRI-DOLBY C	O	PRI Dolby C drive output
32	PC1	PRI-DOLBY B	O	PRI Dobly B drive output
33	PC2	PRI-MPX	O	PRI MPX filter drive output
34	PC3	SEC-DOLBY C	O	SEC Dolby C drive output
35	PE0	SEC-DOLBY B	O	SEC Dolby B drive output
36	PE1	BUSY OUT	O	
37	OSC1	OSC1		Ceramic resonator connection
38	OSC2	OSC2		Transmitting frequency : 4.0 MHz
39	XI			Not used
40	XO			
41	RST	RESET	I	Reset
42	Vdd	Vdd		5V DC power connection

IC901 : MN187167
Main Controller

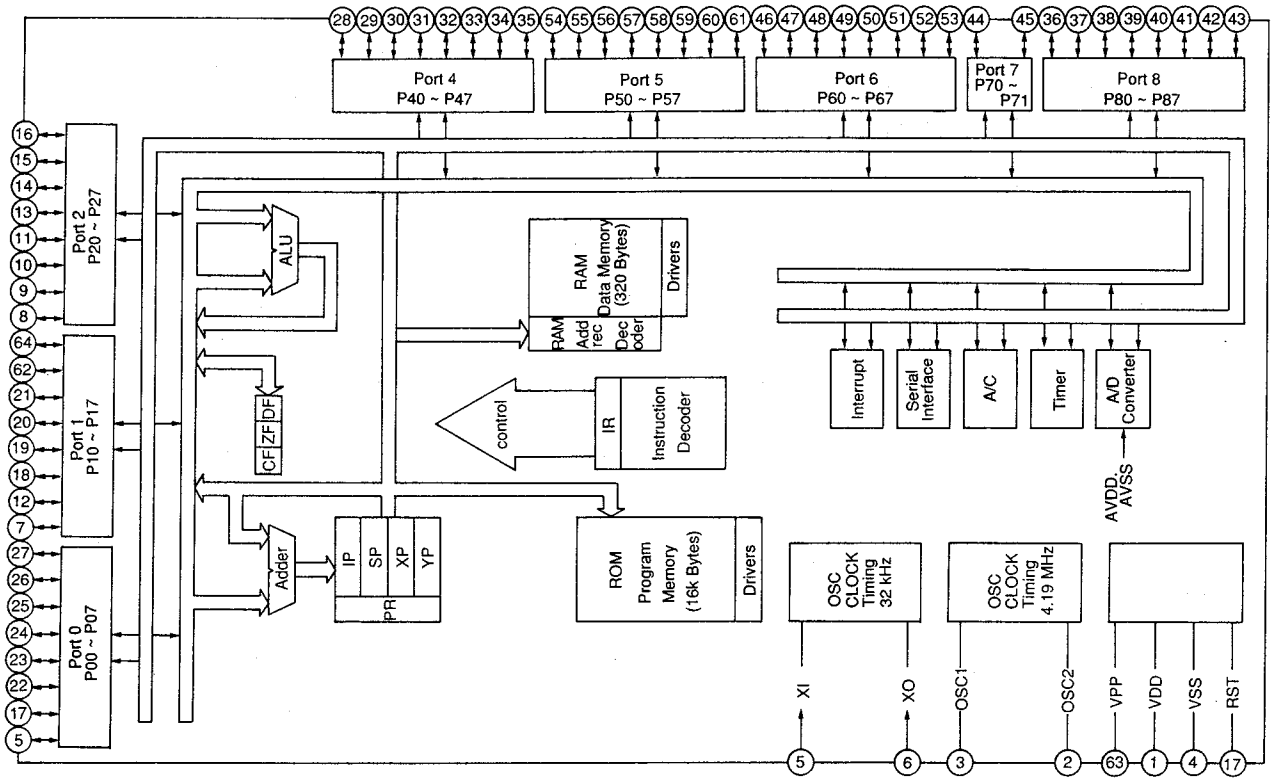

TERMINAL FUNCTIONS

NO.	Name	Functional Name	I/O	Description
1	Vdd	Vdd		5V DC power supply
2	OSC	OSC OUT		Ceramic resonator connection Transmitting frequency : 4.0 MHz
3	OSC	OSC IN		
4	Vss	Vss		GND
5	P06	BUSY IN	I	BUSY IN
6	X0			Not used
7	P17	SYNC. REV. KEY	I	SYNC. REVERSE key input
12	P16	A-PAUSE KEY	I	AUTO PAUSE key input
8	AD7	KEY IN 5	I	Key input Judging wich key has been pressed by DC voltage detection with an A/D converter
9	AD6	KEY IN 4	I	
10	AD5	KEY IN 3	I	
11	AD4	KEY IN 2	I	
13	AD3	KEY IN 1	I	
14	AD2	MS IN	I	A/D input port for MS detection
15	AD1	METER R	I	Level meter right channel input
16	AD0	METER L	I	Level meter left channel input
17	RST	RESET	I	Reset
18	P15	SEC-REEL 2	I	SEC right reel pulse input
19	P14	SEC-REEL 1	I	SEC left reel pulse input
20	P13	SEC-PACK DET	I	SEC pack detection ; L when a cassette is present
21	P12	SEC-QUICK DET	I	SEC quick photo detection L at the leader tape position

NO.	Name	Functional Name	I/O	Description
22	P05	R-SI	I	Remote control input
23	P04	VOLT-DN	I	Power OFF detection ; L when OFF
24	P03	MS GAIN	I	MS amplifier gain control ; H when the gain is small
25	P02	CLK IN/OUT	I/O	Clock input/output terminal for data commumication with SUB
26	P01	DATA IN	I	Serial data input from SUB
27	P00	DATA OUT	O	Serial data output to SUB
28	P47	SEC-F. REC	I	SEC tape front hook detection ; L when REC enabled
29	P46	SEC-R. REC	I	SEC tape rear hook detection
30	P45	PRI-REEL 2	I	PRI right reek pulse input
31	P44	PRI-REEL 1	I	PRI left reel pulse input
32	P43	PRI-PACK DET	I	PRI pack detection
33	P42	PRI-QUICK DET	I	PRI quick photo detection
34	P41	PRI-R. REC	I	PRI tape rear hook detection
35	P40	PRI-F. REC	I	PRI tape front hook detection
36	P87	STB OUT	O	STB output to SUB
37	P86	COPY	O	H when copying from SEC to PRI
38	P85	SEC	O	Voice output to LINE OUT and MS amplifier: H when SEC output and L when PRI output

NO.	Name	Functional Name	I/O	Description
39	P84	S. R. LED	O	H when SYNC. REVERSE LED is on
40	P83	A. P. LED	O	H when AUTO PAUSE LED is on
41	P82	G0	O	FL display grid drive output
42	P81	G1	O	
43	P80	G2	O	
44	P71	G3	O	
45	P70	G4	O	
46	P67	G5	O	
47	P66	G6	O	
48	P65	G7	O	
49	P64	G8	O	
50	P63	a	O	FL display anode drive output
51	P62	b	O	
52	P61	c	O	
53	P60	d	O	
54	P57	e	O	
55	P56	f	O	
56	P55	g	O	
57	P54	h	O	
58	P53	i	O	
59	P52	j	O	
60	P51	k	O	
61	P50	l	O	
62	P11	INI SET B	I	Initial setting SW B connection
63	Vpp	Vpp		Negative voltage load terminal for FL
64	P10	INI SET A		Initial setting SW A connection

SCHEMATIC DIAGRAM (1)

NOTES:
1. ALL RESISTANCES VALUES ARE IN Ω
   kΩ = 1000Ω, MΩ = 1000kΩ
2. THE WATTAGE OF RESISTORS IS 1/2W UNLESS OTHERWISE NOTED.
3. ALL CAPACITANCES VALUES ARE IN μF UNLESS OTERWISE NOTED. P = μμF.
4. V : DC VOLTAGE AT NO SIGNAL

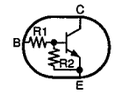

Type	R1	R2
DTC114YS	10K	47K
DTC124ES	22K	22K

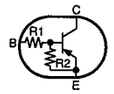

Type	R1	R2
DTA114YS	10K	10K
DTA124ES	22K	22K
DTA143ES	4.7K	4.7K

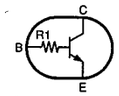

Type	R1
DTC114TS	10K

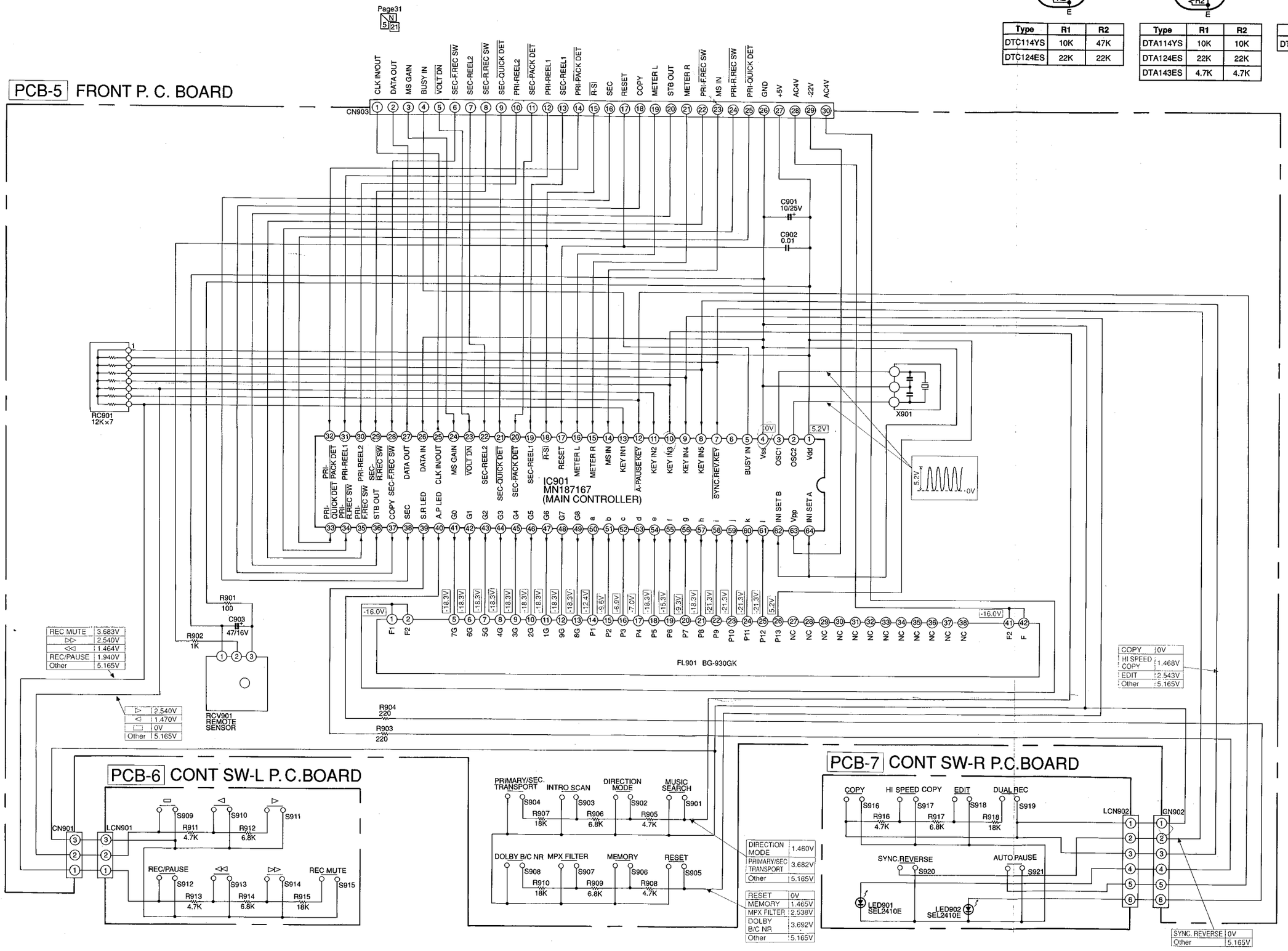

SCHEMATIC DIAGRAM (1)

NOTES:
1. ALL RESISTANCES VALUES ARE IN Ω
   kΩ = 1000Ω, MΩ = 1000kΩ
2. THE WATTAGE OF RESISTORS IS 1/2W UNLESS OTHERWISE NOTED.
3. ALL CAPACITANCES VALUES ARE IN μF UNLESS OTERWISE NOTED. P = μμF.
4. V : DC VOLTAGE AT NO SIGNAL

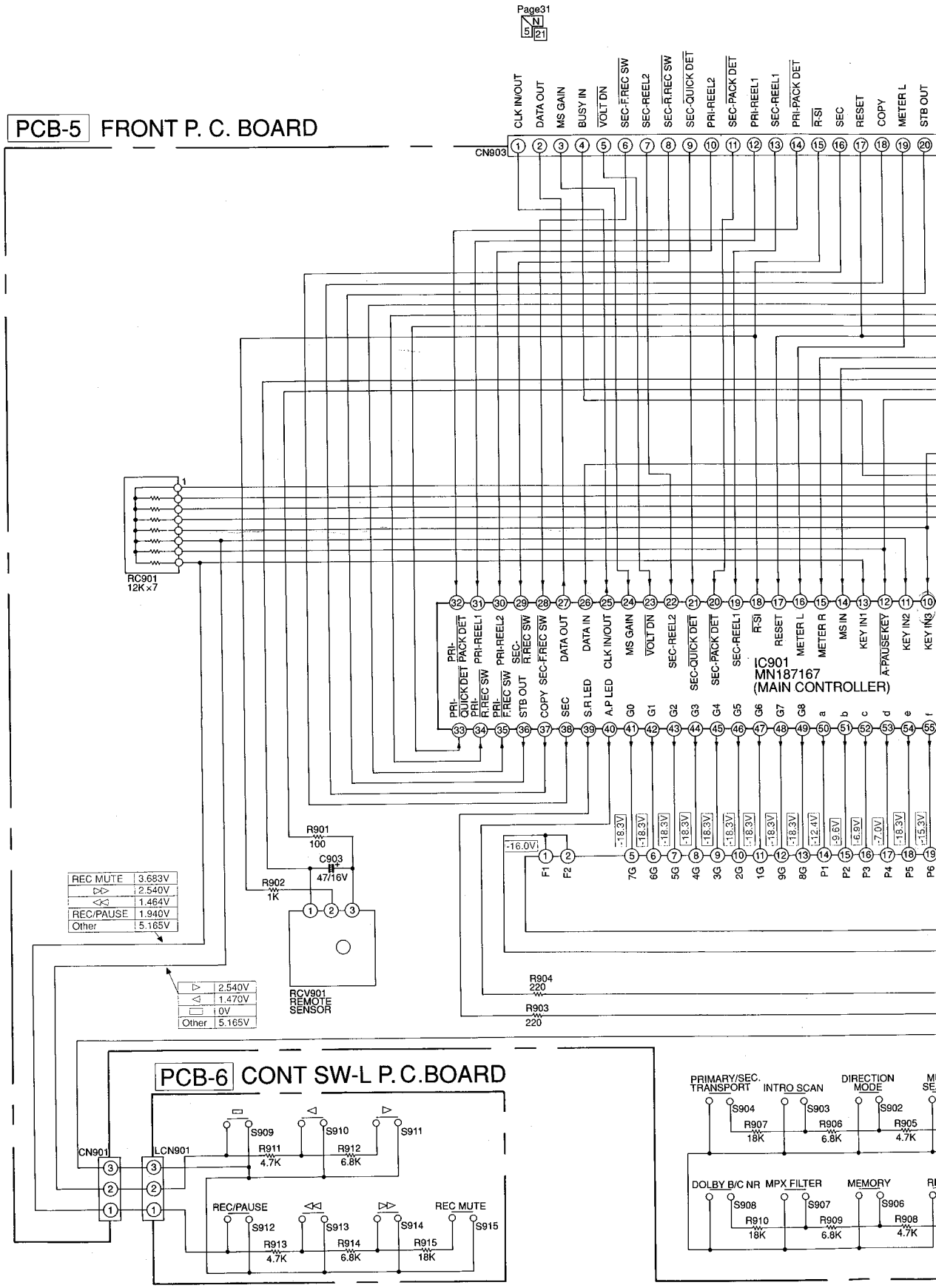

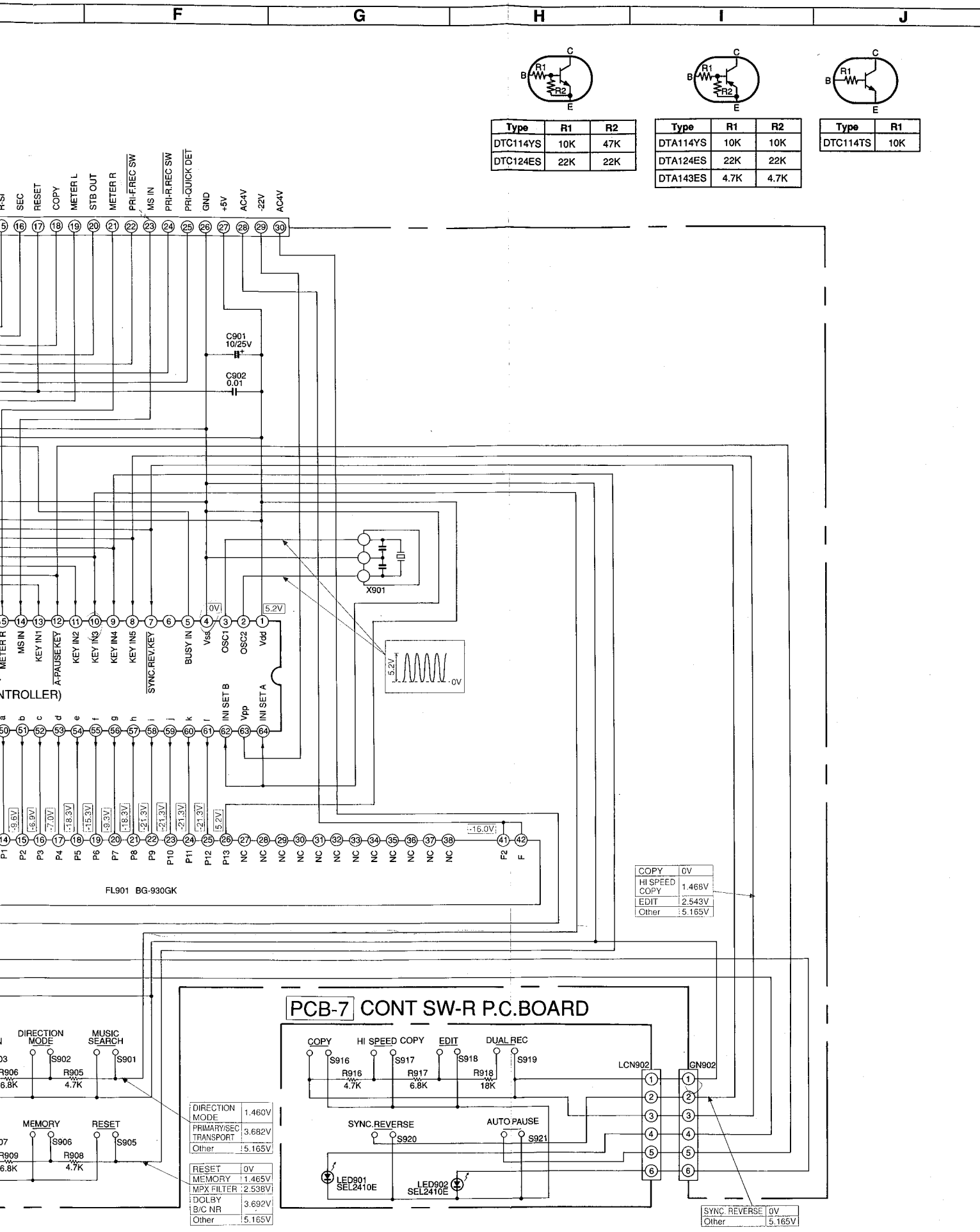

Type	R1	R2
DTC114YS	10K	47K
DTC124ES	22K	22K

Type	R1	R2
DTA114YS	10K	10K
DTA124ES	22K	22K
DTA143ES	4.7K	4.7K

Type	R1
DTC114TS	10K

SCHEMATIC DIAGRAM (2)

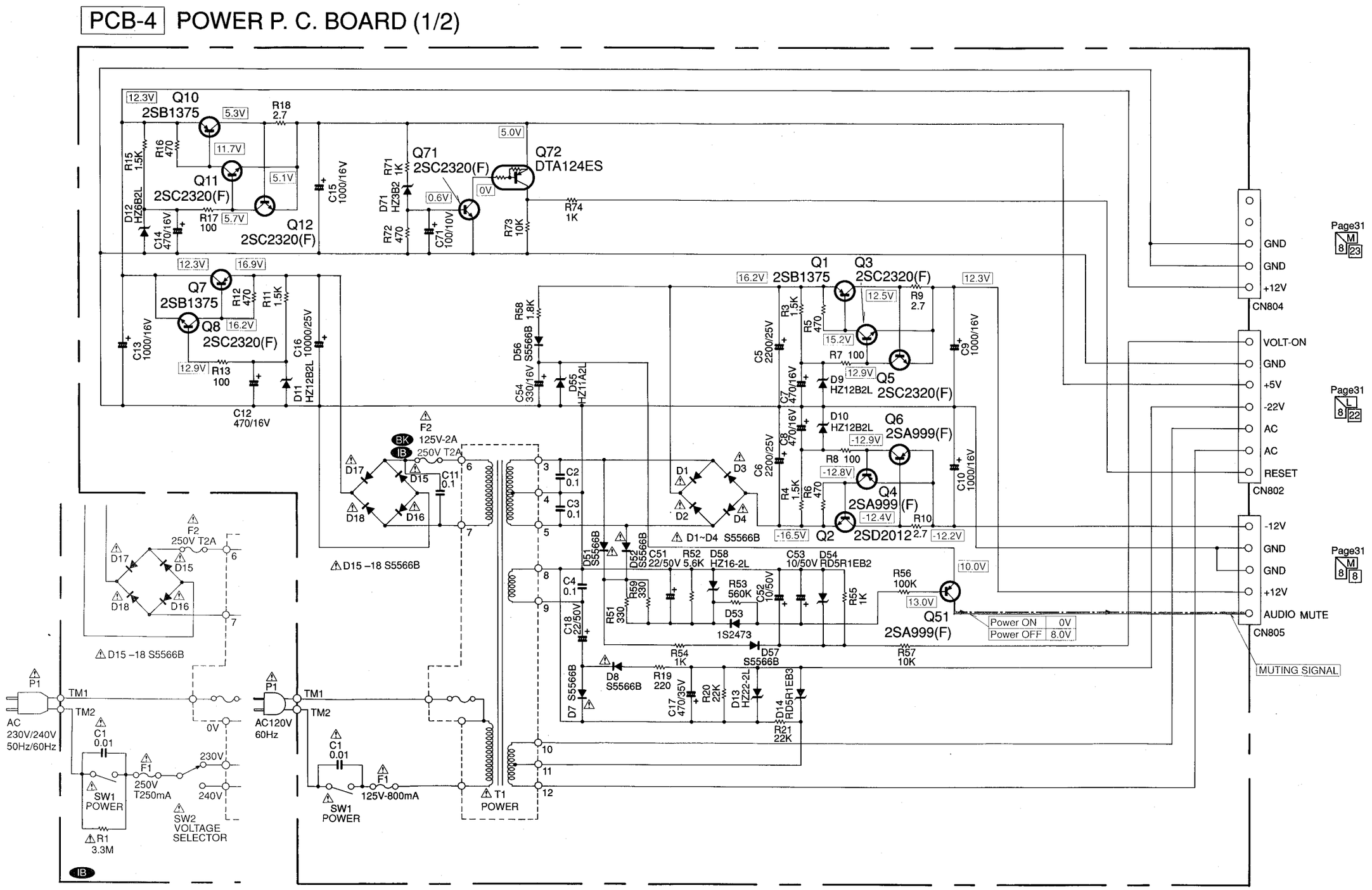

SCHEMATIC DIAGRAM (2)

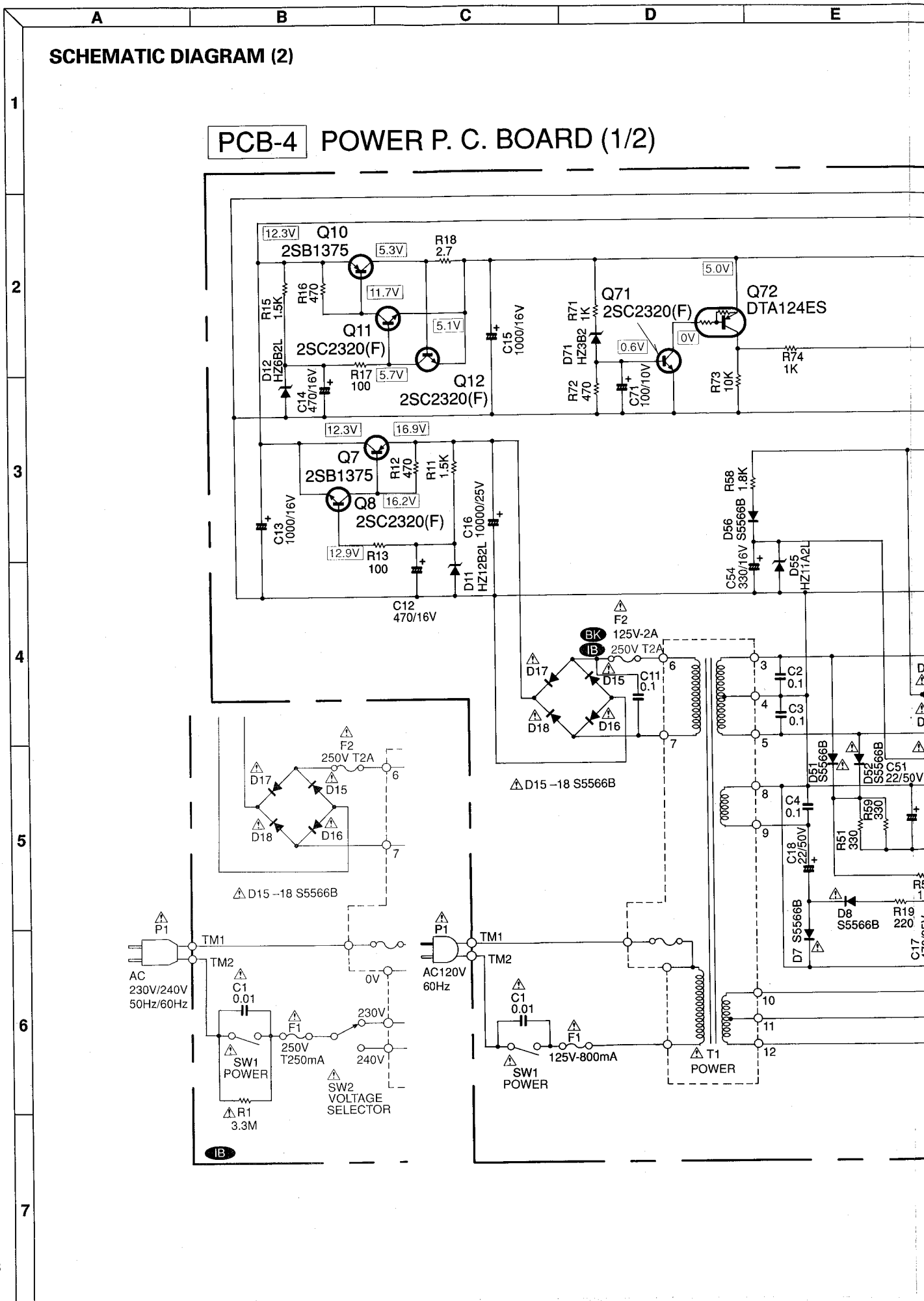

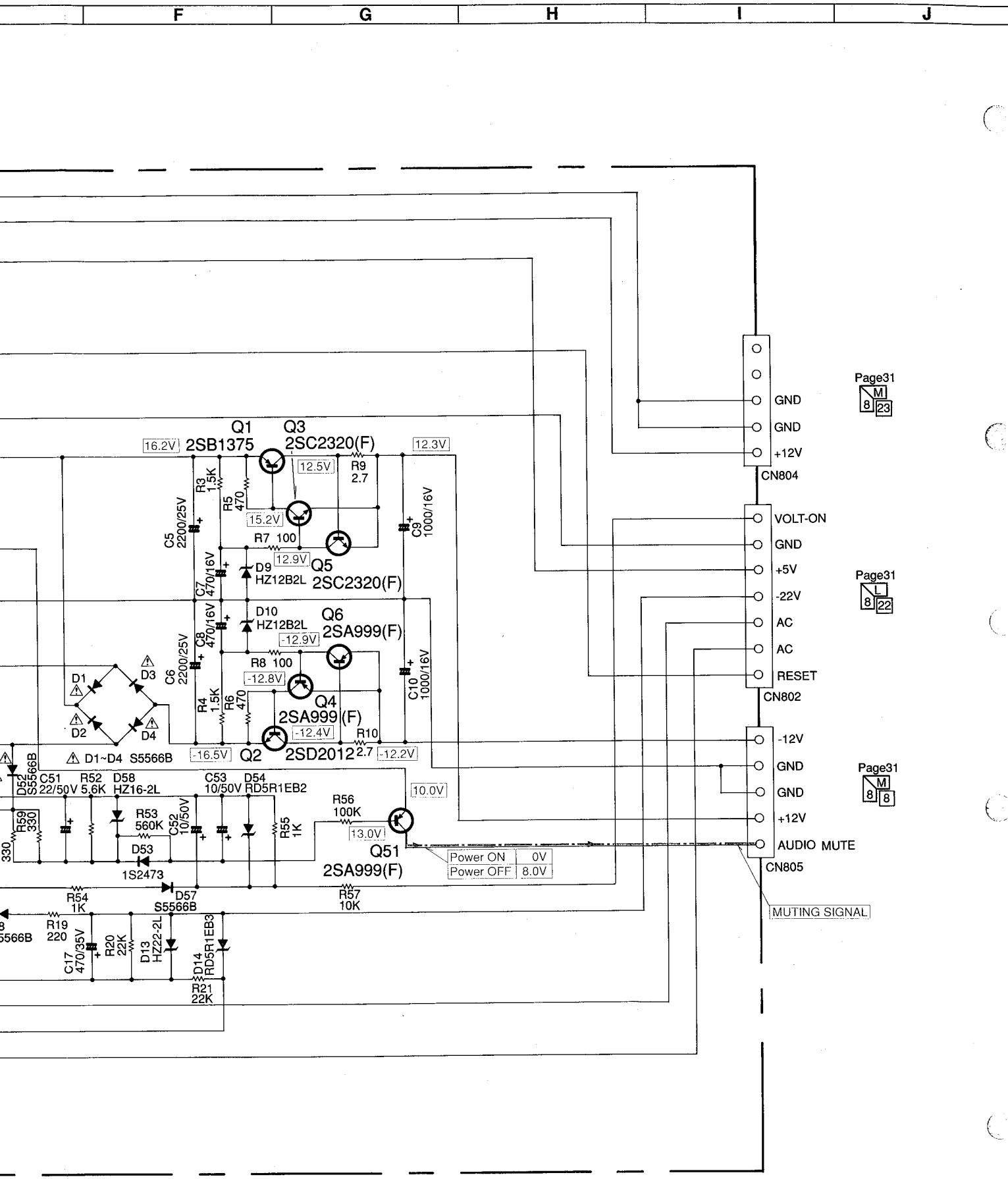
F
G
H
I
J
Q1
2SB1375
Q3
2SC2320(F)
16.2V
12.5V
12.3V
R9
2.7
R3
1.5K
R5
470
15.2V
C5
2200/25V
R7 100
12.9V
D9
HZ12B2L
Q5
2SC2320(F)
C9
1000/16V
C7
470/16V
D10
HZ12B2L
Q6
2SA999(F)
-12.9V
C8
470/16V
R8 100
-12.8V
C6
2200/25V
D1
D2
D3
D4
R4
1.5K
R6
470
Q4
2SA999(F)
-12.4V
R10
2.7
C10
1000/16V
-16.5V
Q2
2SD2012
-12.2V
D1~D4 S5566B
D52
S5566B
C51
22/50V
R52
5.6K
D58
HZ16-2L
C53
10/50V
D54
RD5R1EB2
10.0V
R56
100K
R59
330
R53
560K
C52
10/50V
R55
1K
13.0V
D53
1S2473
Q51
2SA999(F)
Power ON 0V
Power OFF 8.0V
R54
1K
D57
S5566B
R57
10K
R19
220
C17
470/35V
R20
22K
D13
HZ22-2L
D14
RD5R1EB3
R21
22K
GND
GND
+12V
CN804
VOLT-ON
GND
+5V
-22V
AC
AC
RESET
CN802
-12V
GND
GND
+12V
AUDIO MUTE
CN805
MUTING SIGNAL
Page31
M
8
23
Page31
L
8
22
Page31
M
8
8

SCHEMATIC DIAGRAM (3)

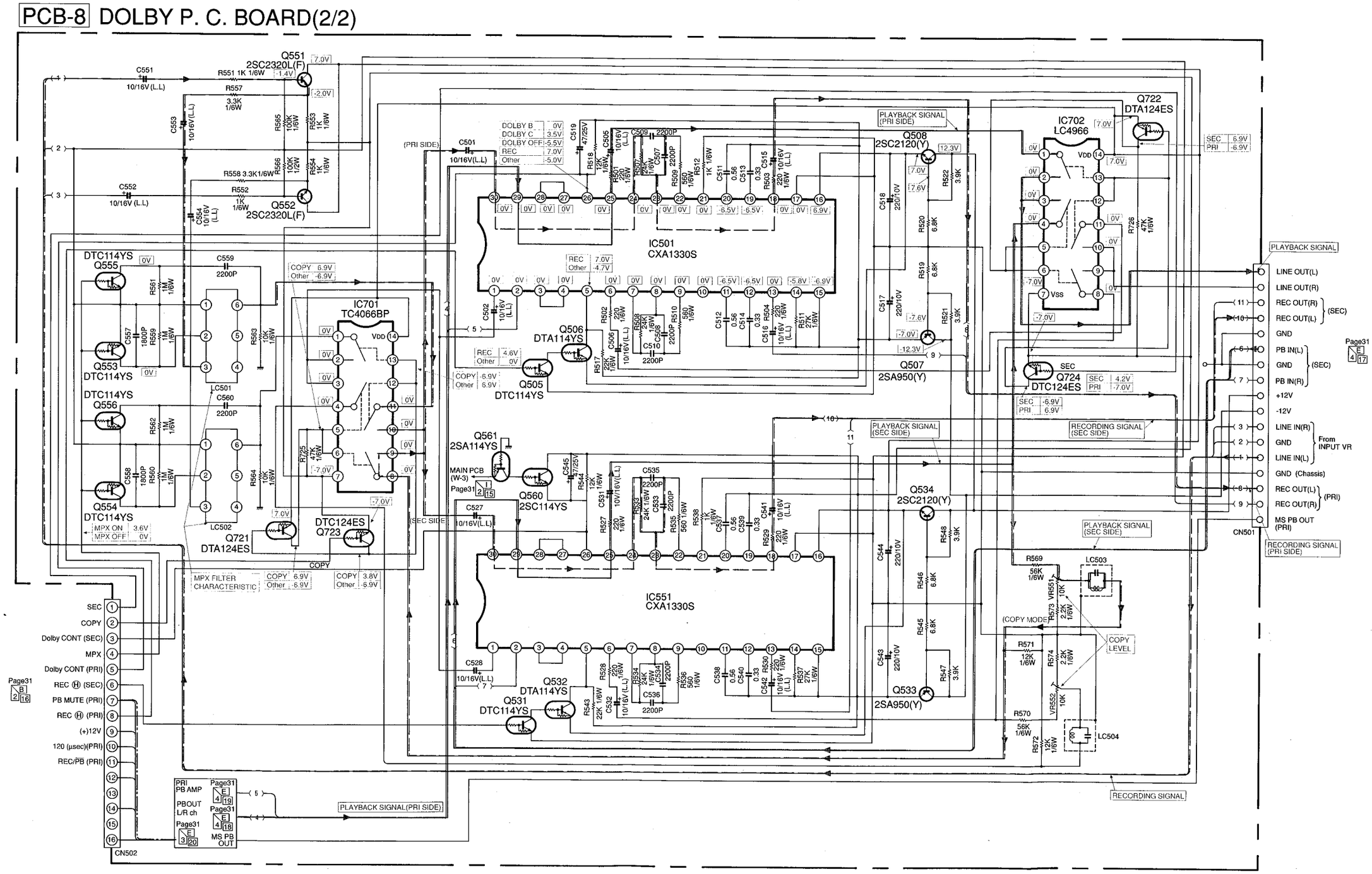

SCHEMATIC DIAGRAM (3)

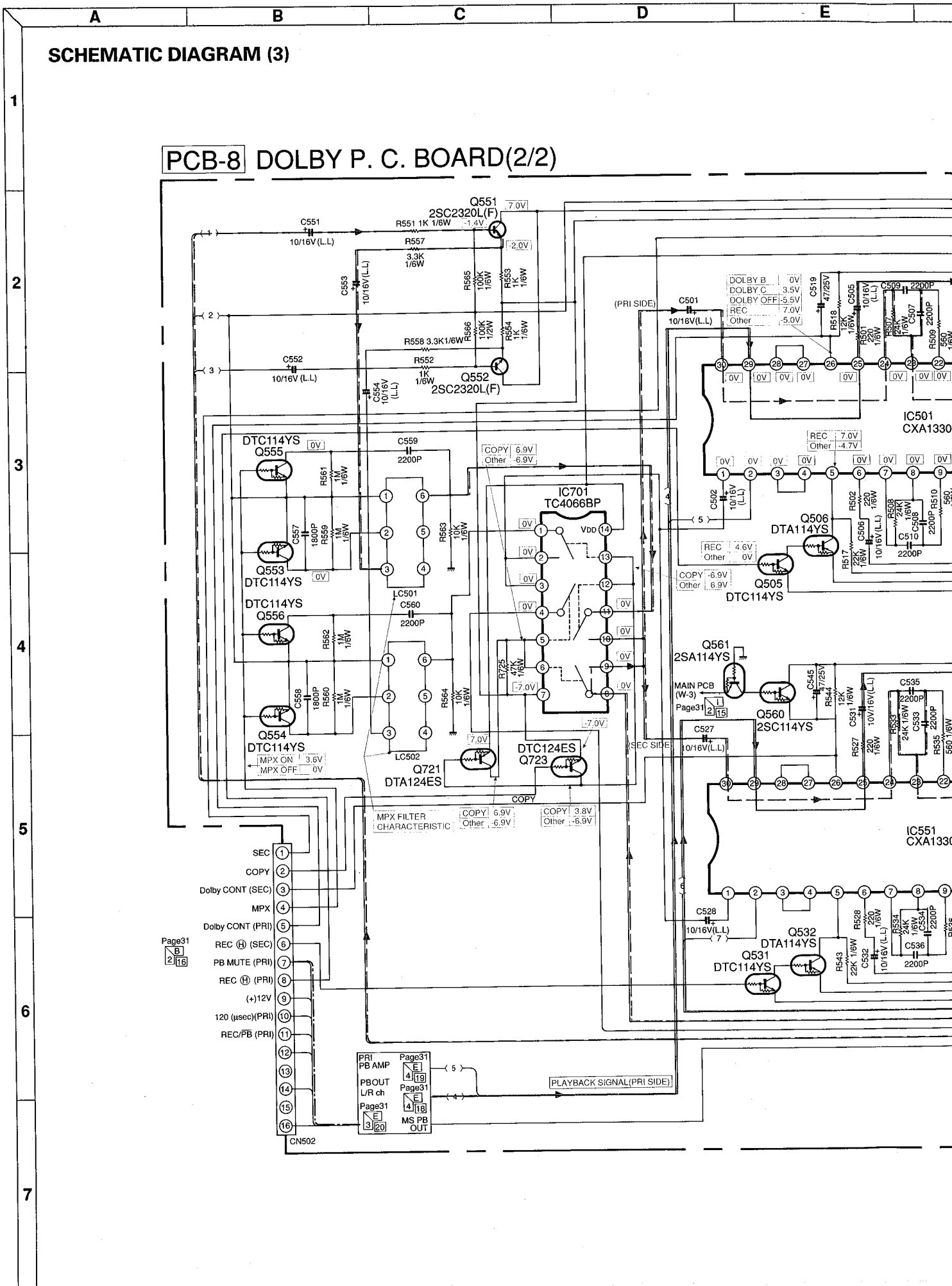

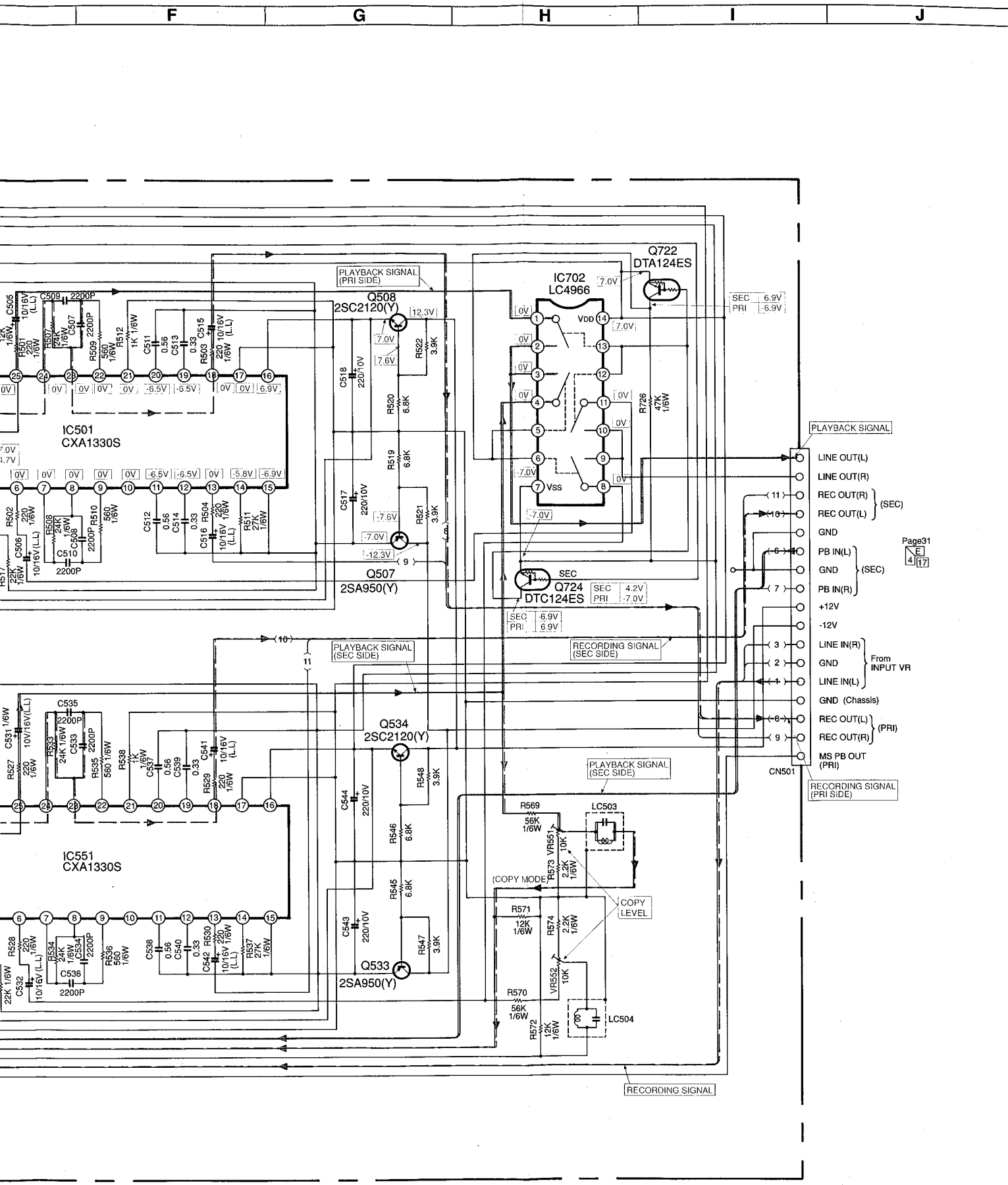
F
G
H
I
J
IC501
CXA1330S
IC551
CXA1330S
IC702
LC4966
Q508
2SC2120(Y)
Q507
2SA950(Y)
Q534
2SC2120(Y)
Q533
2SA950(Y)
Q722
DTA124ES
Q724
DTC124ES
LC503
LC504
CN501
PLAYBACK SIGNAL
(PRI SIDE)
PLAYBACK SIGNAL
(SEC SIDE)
RECORDING SIGNAL
(SEC SIDE)
RECORDING SIGNAL
(PRI SIDE)
RECORDING SIGNAL
COPY MODE
COPY LEVEL
LINE OUT(L)
LINE OUT(R)
REC OUT(R)
REC OUT(L)
(SEC)
GND
PB IN(L)
GND
PB IN(R)
(SEC)
+12V
-12V
LINE IN(R)
GND
LINE IN(L)
From INPUT VR
GND (Chassis)
REC OUT(L)
REC OUT(R)
(PRI)
MS PB OUT
(PRI)
Page31
E
4
17

SCHEMATIC DIAGRAM (4)

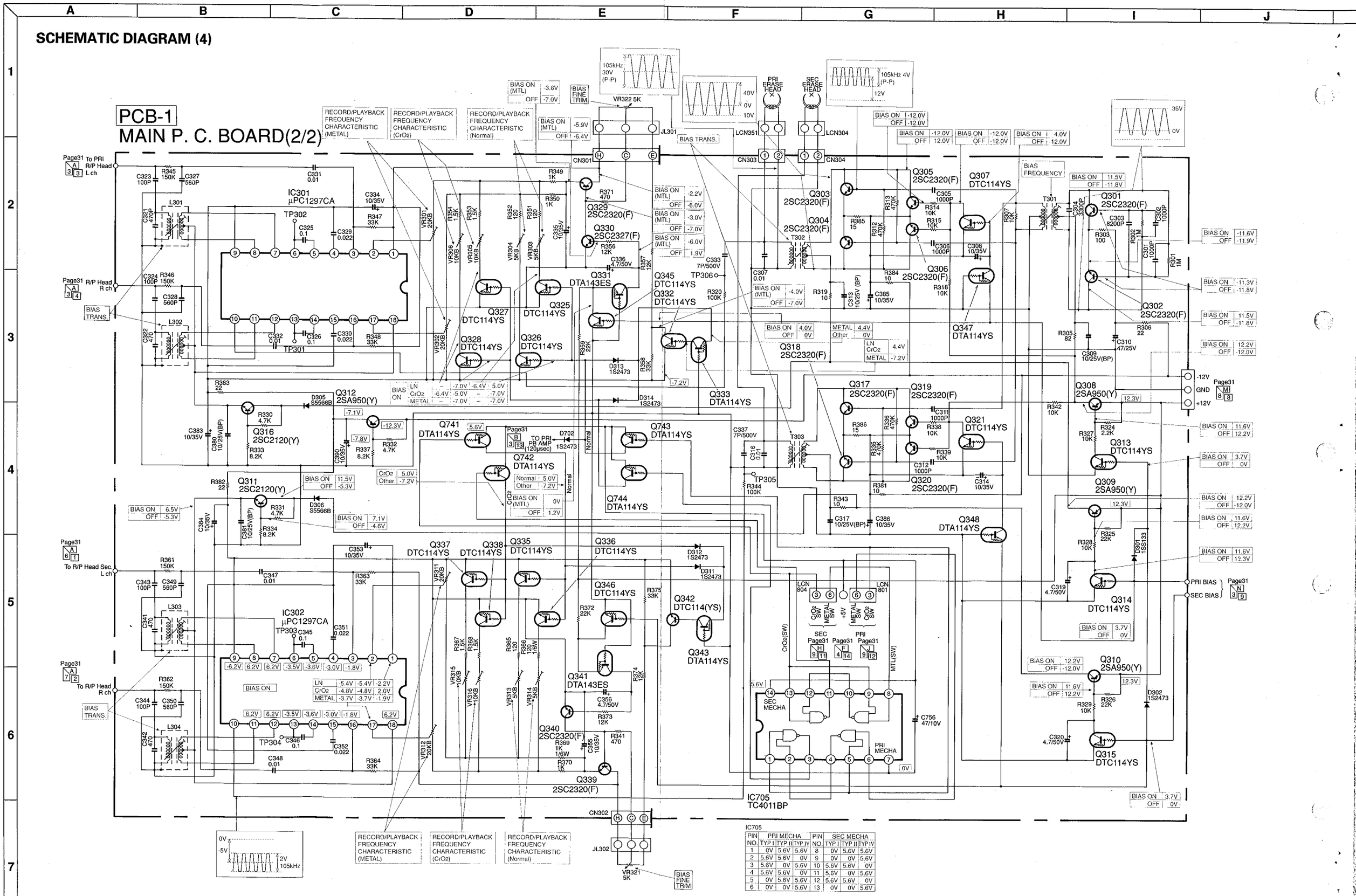

IC705

PIN NO.	PRI MECHA TYP I	PRI MECHA TYP II	PRI MECHA TYP IV	PIN NO.	SEC MECHA TYP I	SEC MECHA TYP II	SEC MECHA TYP IV
1	0V	5.6V	5.6V	8	0V	5.6V	5.6V
2	5.6V	5.6V	0V	9	0V	0V	5.6V
3	5.6V	0V	5.6V	10	5.6V	5.6V	0V
4	5.6V	5.6V	0V	11	5.6V	0V	5.6V
5	0V	5.6V	5.6V	12	5.6V	5.6V	0V
6	0V	0V	5.6V	13	0V	0V	5.6V

SCHEMATIC DIAGRAM (4)

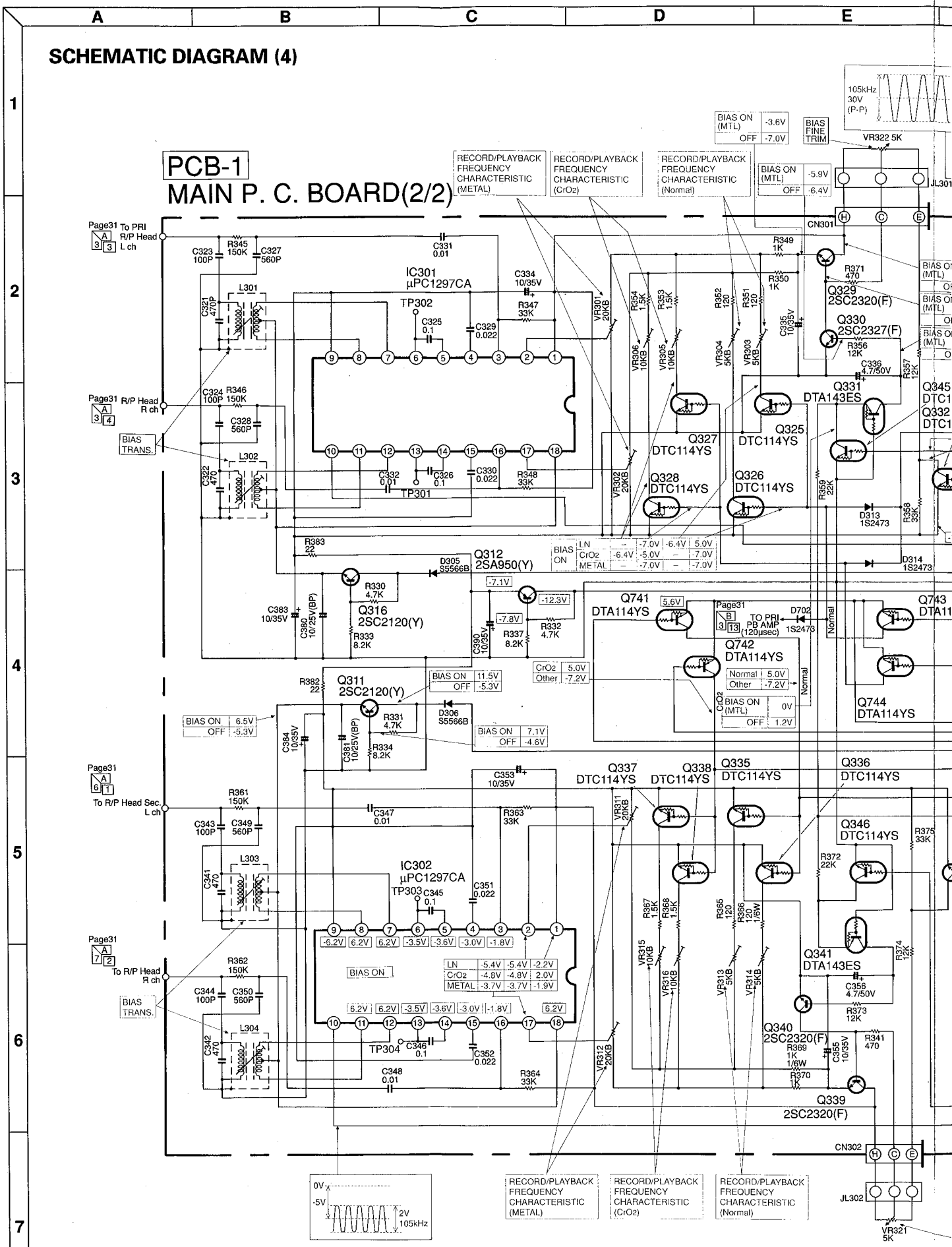

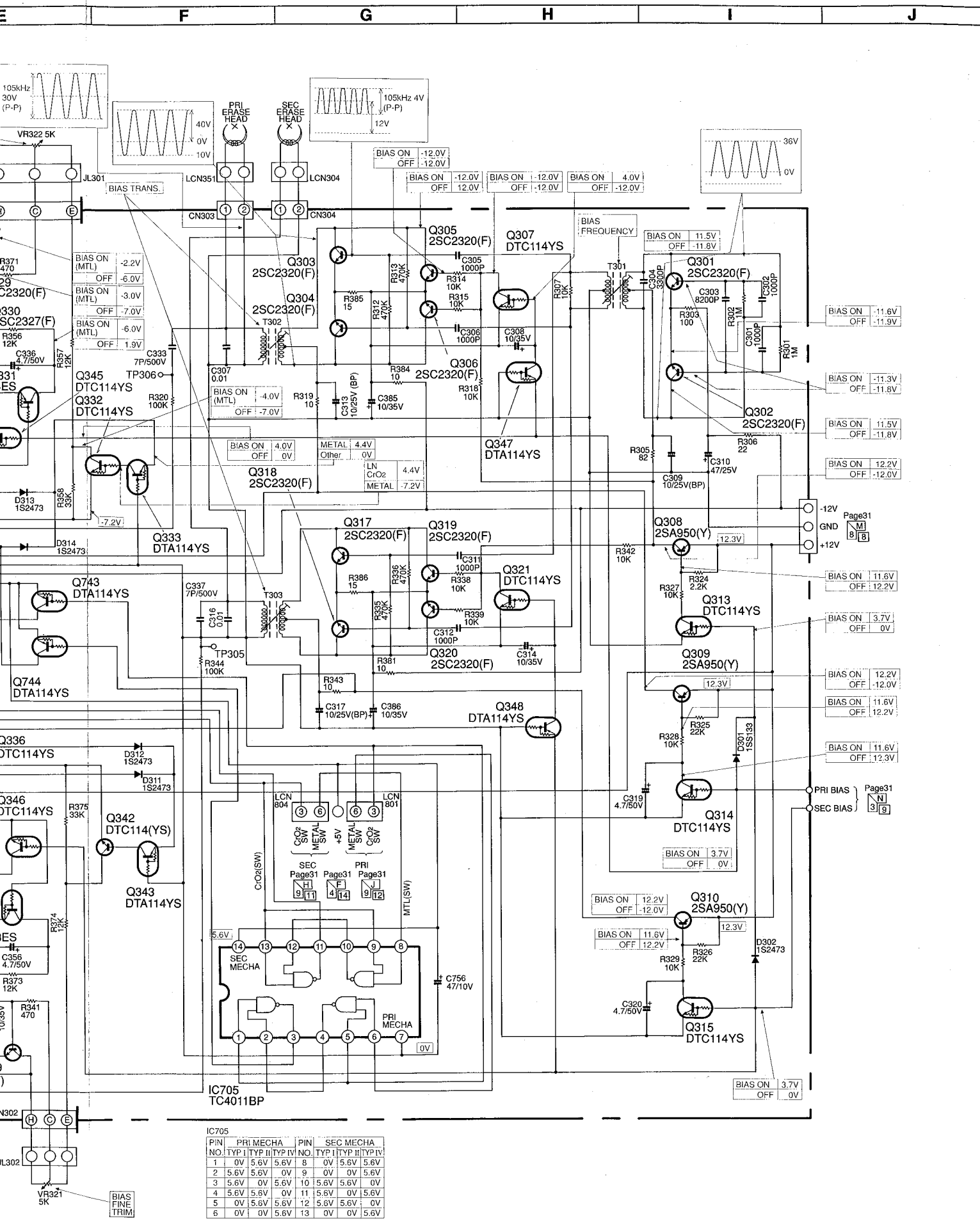

IC705

PIN NO.	PRI MECHA TYP I	TYP II	TYP IV	PIN NO.	SEC MECHA TYP I	TYP II	TYP IV
1	0V	5.6V	5.6V	8	0V	5.6V	5.6V
2	5.6V	5.6V	0V	9	0V	0V	5.6V
3	5.6V	0V	5.6V	10	5.6V	5.6V	0V
4	5.6V	5.6V	0V	11	5.6V	0V	5.6V
5	0V	5.6V	5.6V	12	5.6V	5.6V	0V
6	0V	0V	5.6V	13	0V	0V	5.6V

SCHEMATIC DIAGRAM (5)

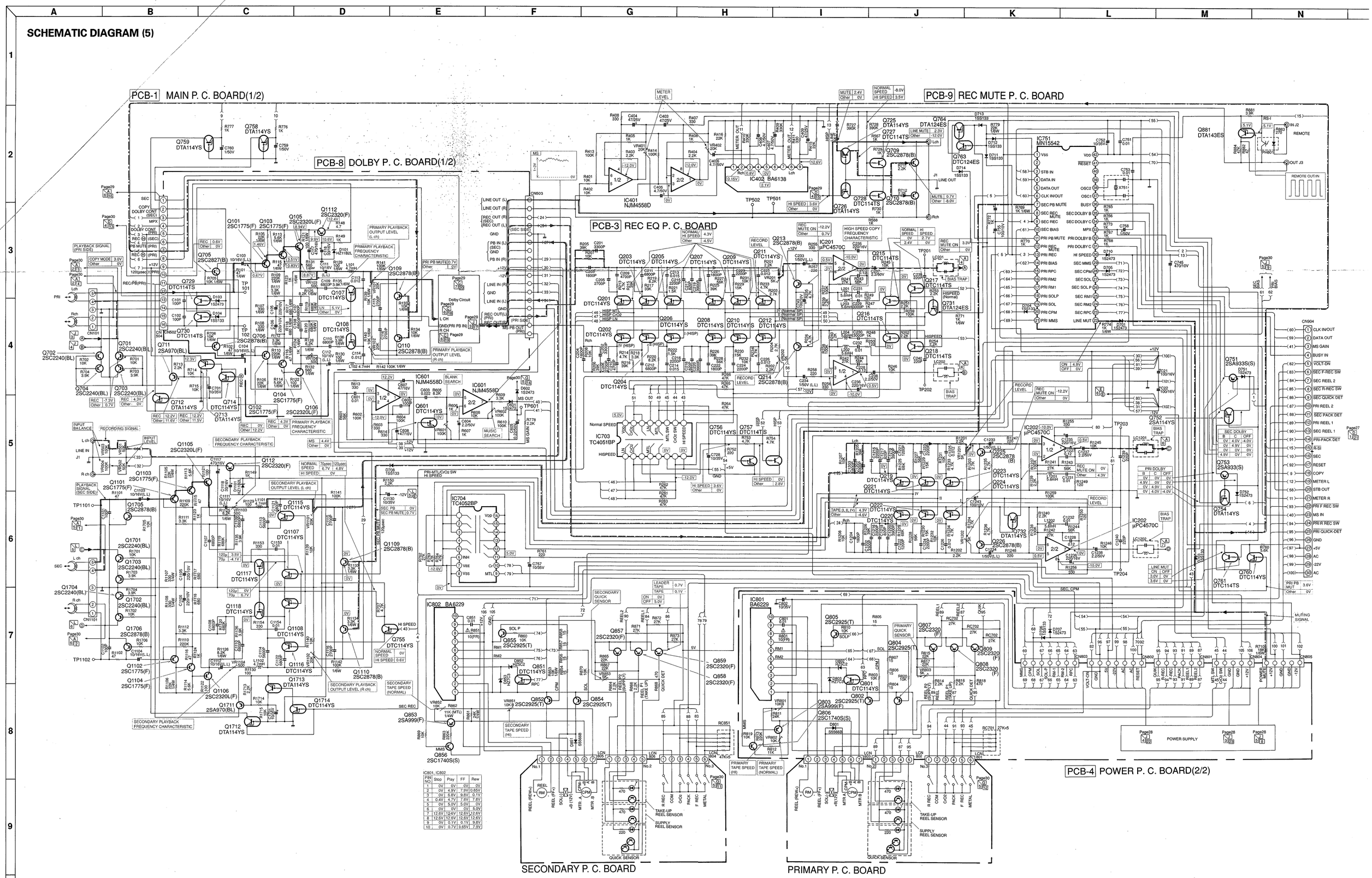

PIN NO	Stop	Play	FF	Rew
1	0V	0V	0V	0V
2	0V	4.9V	7.9V	0.65V
3	0V	6.8V	9.8V	0.1V
4	0.4V	4.7V	7.6V	7.8V
5	0V	5.0V	5.0V	0V
6	0V	0V	0V	5.0V
7	12.6V	12.6V	12.6V	12.6V
8	12.6V	12.6V	12.6V	12.6V
9	0V	0.1V	0.1V	9.8V
10	0V	0.7V	0.65V	7.9V

IC801, IC802

SCHEMATIC DIAGRAM (5)

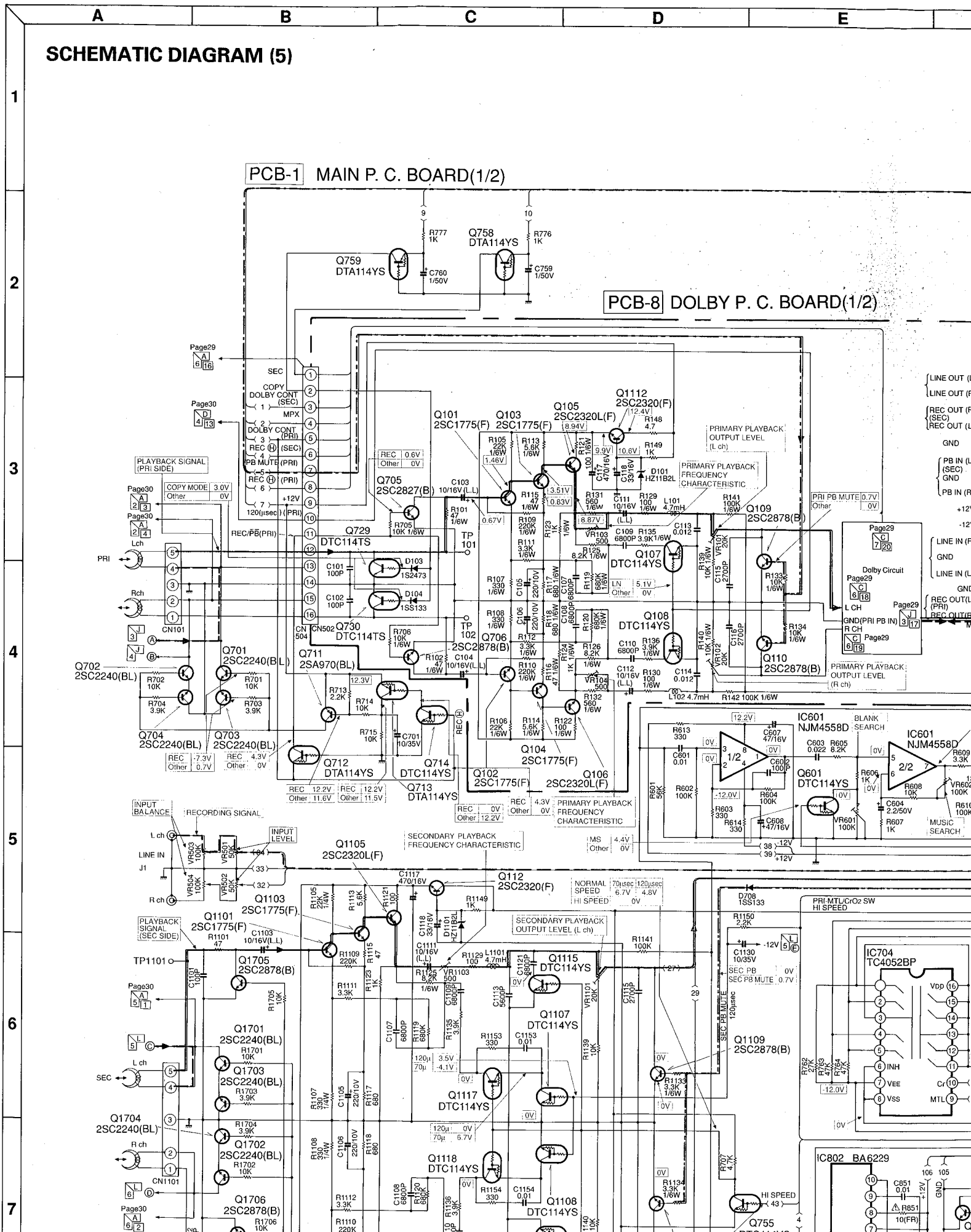

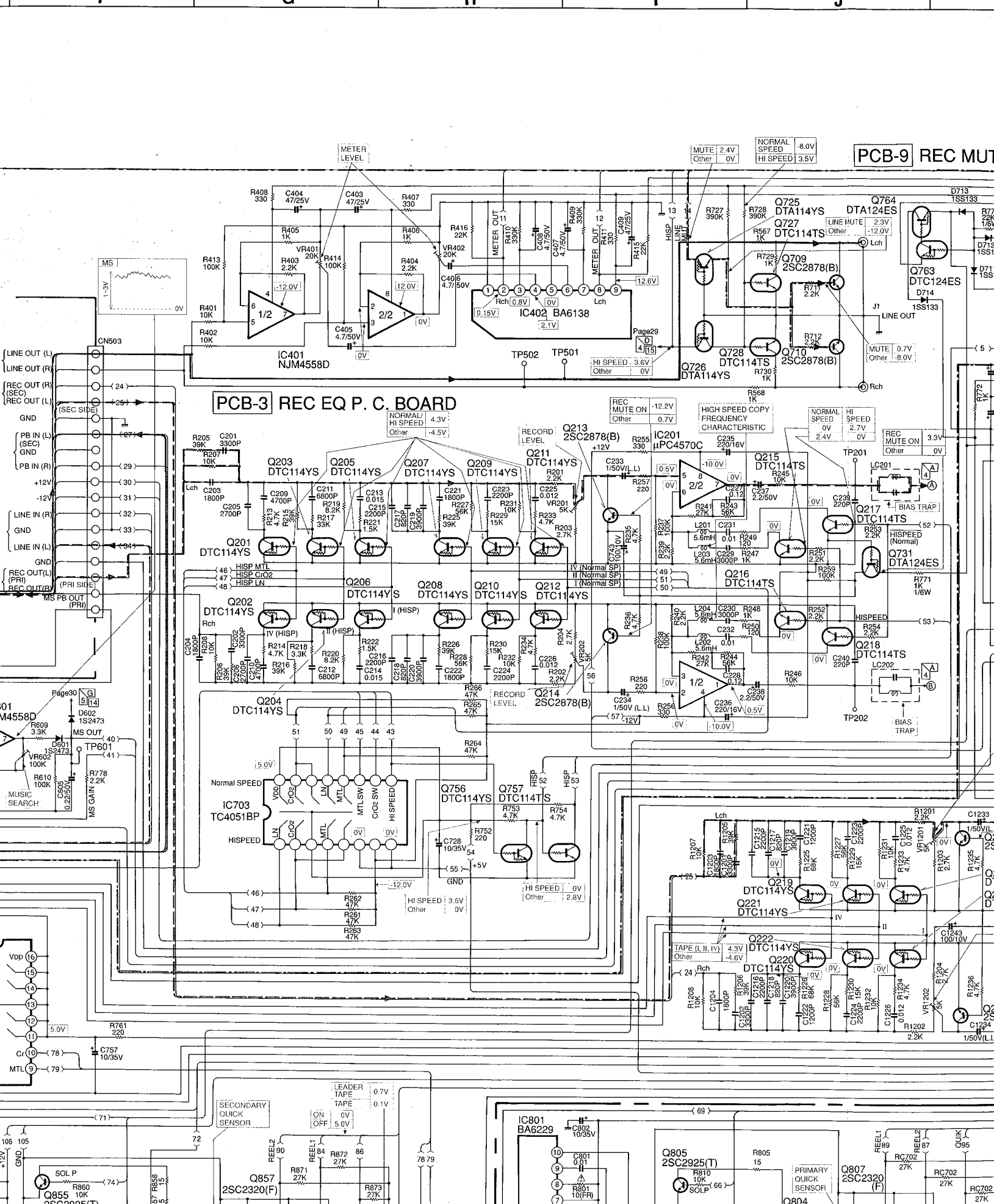
F
G
H
I
J
PCB-9 REC MUT
PCB-3 REC EQ P. C. BOARD
IC401 NJM4558D
IC402 BA6138
IC201 μPC4570C
IC703 TC4051BP
IC801 BA6229
CN503
Q725 DTA114YS
Q727 DTC114TS
Q764 DTA124ES
Q763 DTC124ES
Q709 2SC2878(B)
Q710 2SC2878(B)
Q728 DTC114TS
Q726 DTA114YS
Q203 DTC114YS
Q205 DTC114YS
Q207 DTC114YS
Q209 DTC114YS
Q211 DTC114YS
Q213 2SC2878(B)
Q215 DTC114TS
Q217 DTC114TS
Q218 DTC114TS
Q731 DTA124ES
Q201 DTC114YS
Q206 DTC114YS
Q208 DTC114YS
Q210 DTC114YS
Q212 DTC114YS
Q216 DTC114TS
Q202 DTC114YS
Q204 DTC114YS
Q214 2SC2878(B)
Q756 DTC114YS
Q757 DTC114TS
Q219 DTC114YS
Q221 DTC114YS
Q222 DTC114YS
Q220 DTC114YS
Q855 2SC2925(T)
Q857 2SC2320(F)
Q805 2SC2925(T)
Q807 2SC2320(F)
Q804
TP502
TP501
TP601
TP201
TP202
LC201
LC202
BIAS TRAP
LINE OUT
MS GAIN
MUSIC SEARCH
SECONDARY QUICK SENSOR
PRIMARY QUICK SENSOR
HIGH SPEED COPY FREQUENCY CHARACTERISTIC
RECORD LEVEL
METER LEVEL
LINE OUT (L)
LINE OUT (R)
REC OUT (R) (SEC)
REC OUT (L) (SEC SIDE)
GND
PB IN (L) (SEC)
PB IN (R)
+12V
-12V
LINE IN (R)
LINE IN (L)
REC OUT(L) (PRI)
REC OUT(R) (PRI SIDE)
MS PB OUT (PRI)
HISP MTL
HISP CrO2
HISP LN
MS OUT
Normal SPEED
HISPEED
HISPEED (Normal)
BIAS TRAP
LEADER TAPE
TAPE
ON
OFF
REEL1
REEL2
QUIK
SOL P
SOLP

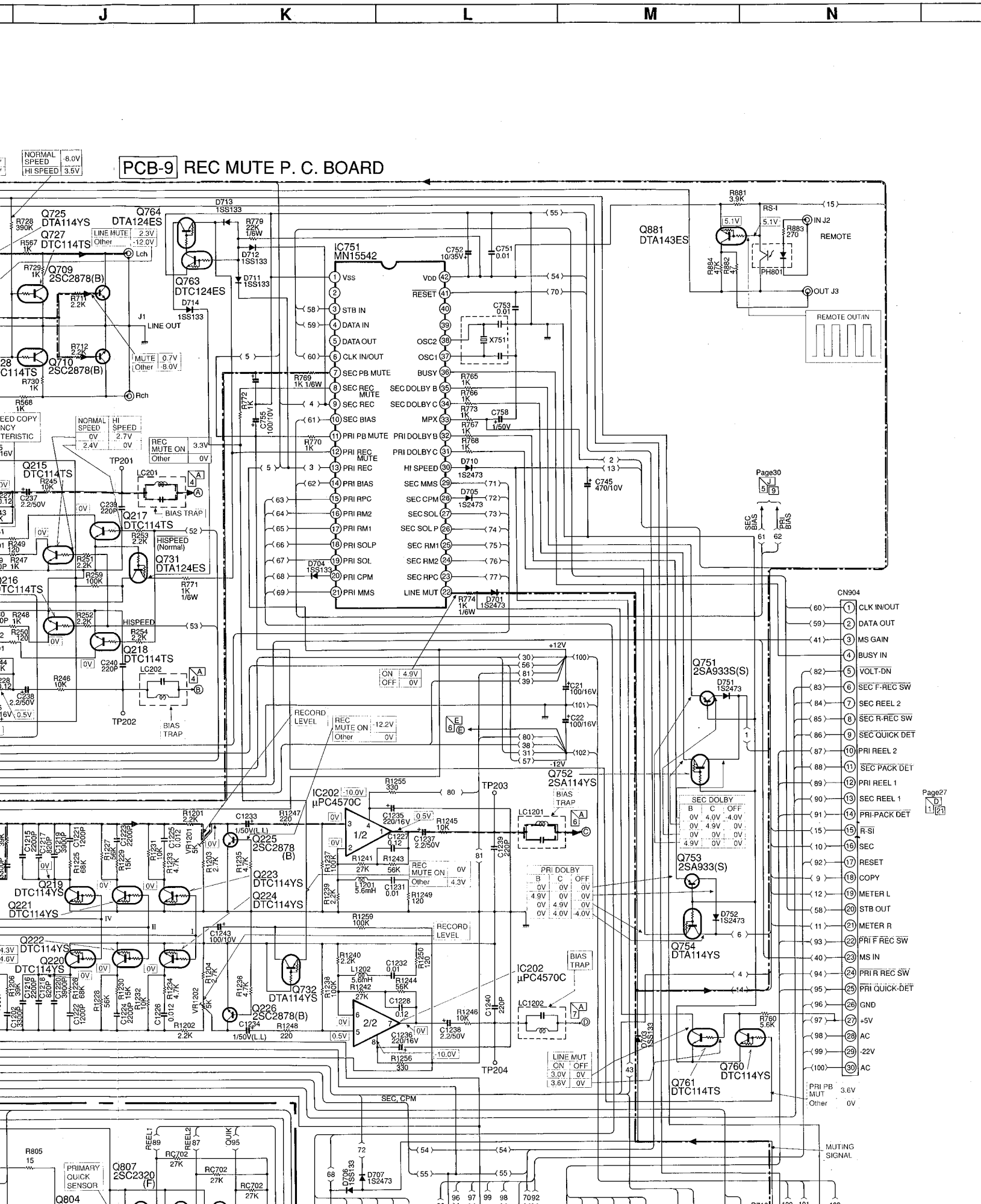
J
K
L
M
N
PCB-9 REC MUTE P. C. BOARD
IC751
MN15542
Q725
DTA114YS
Q727
DTC114TS
Q764
DTA124ES
Q763
DTC124ES
Q709
2SC2878(B)
Q710
2SC2878(B)
Q881
DTA143ES
REMOTE
IN J2
OUT J3
REMOTE OUT/IN
LINE OUT
Lch
Rch
Q215
DTC114TS
Q217
DTC114TS
Q731
DTA124ES
Q216
DTC114TS
Q218
DTC114TS
BIAS TRAP
HISPEED (Normal)
HISPEED
Q751
2SA933S(S)
Q752
2SA114YS
Q753
2SA933(S)
Q754
DTA114YS
Q760
DTC114YS
Q761
DTC114TS
Q732
DTA114YS
Q225
2SC2878 (B)
Q226
2SC2878(B)
Q223
DTC114YS
Q224
DTC114YS
Q219
DTC114YS
Q221
DTC114YS
Q222
DTC114YS
Q220
DTC114YS
IC202
μPC4570C
CN904
CLK IN/OUT
DATA OUT
MS GAIN
BUSY IN
VOLT-DN
SEC F-REC SW
SEC REEL 2
SEC R-REC SW
SEC QUICK DET
PRI REEL 2
SEC PACK DET
PRI REEL 1
SEC REEL 1
PRI-PACK DET
R-SI
SEC
RESET
COPY
METER L
STB OUT
METER R
PRI F REC SW
MS IN
PRI R REC SW
PRI QUICK-DET
GND
+5V
AC
-22V
AC
Q807
2SC2320 (F)
Q804
PRIMARY QUICK SENSOR
MUTING SIGNAL
SEC, CPM

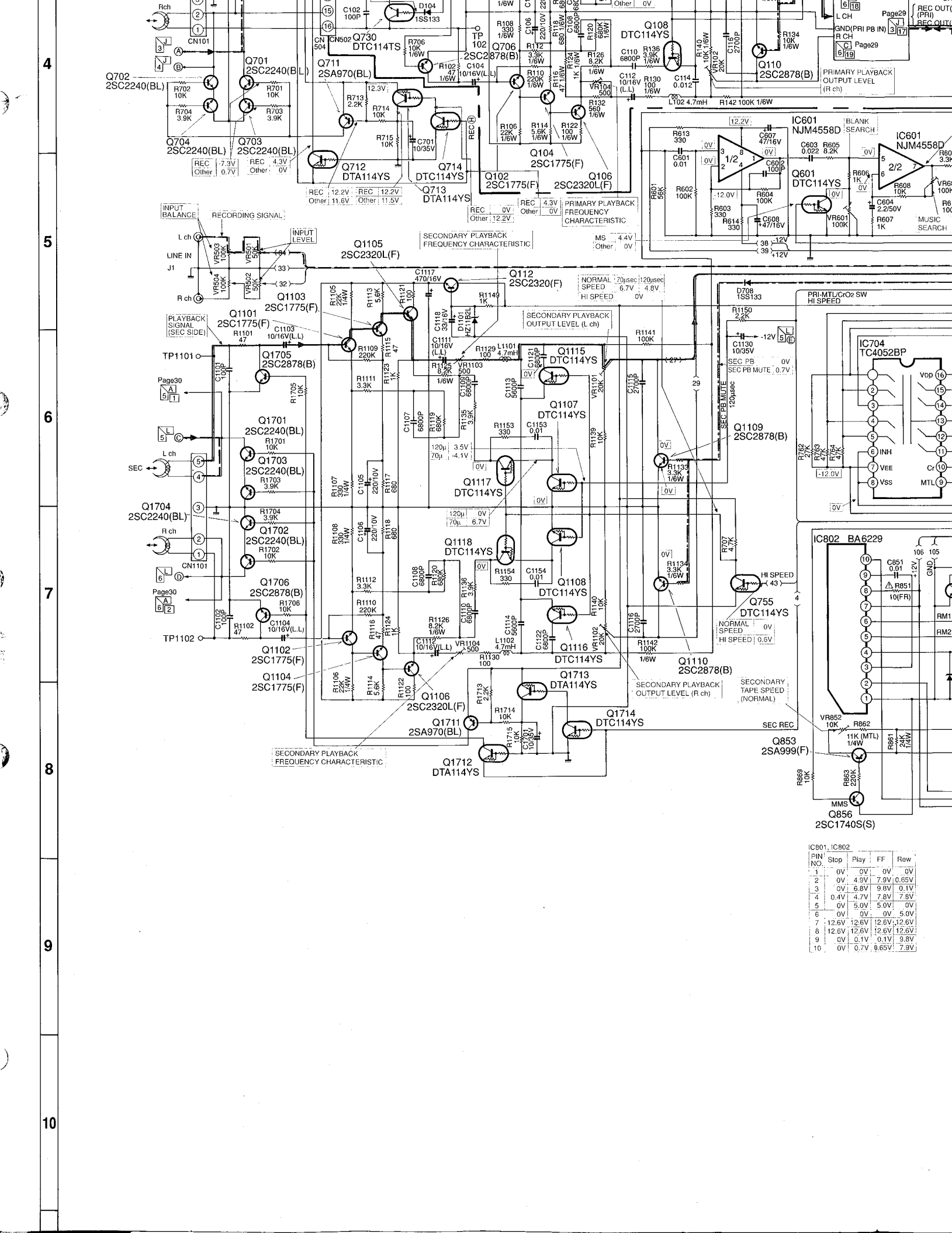

IC801, IC802

PIN NO.	Stop	Play	FF	Rew
1	0V	0V	0V	0V
2	0V	4.9V	7.9V	0.65V
3	0V	6.8V	9.8V	0.1V
4	0.4V	4.7V	7.8V	7.8V
5	0V	5.0V	5.0V	0V
6	0V	0V	0V	5.0V
7	12.6V	12.6V	12.6V	12.6V
8	12.6V	12.6V	12.6V	12.6V
9	0V	0.1V	0.1V	9.8V
10	0V	0.7V	0.65V	7.9V

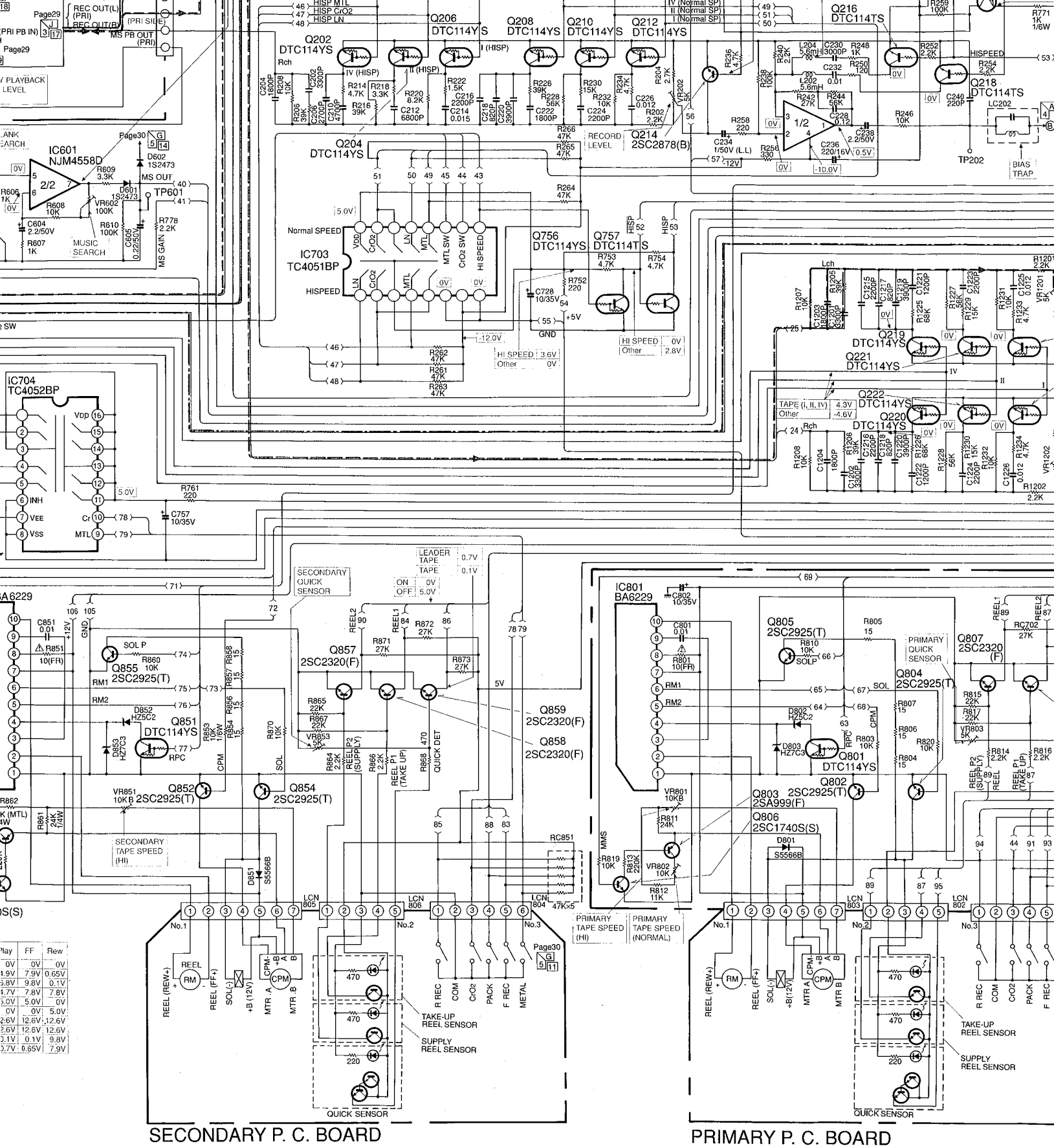
SECONDARY P. C. BOARD
PRIMARY P. C. BOARD
IC601 NJM4558D
IC703 TC4051BP
IC704 TC4052BP
IC801 BA6229
Q202 DTC114YS
Q204 DTC114YS
Q206 DTC114YS
Q208 DTC114YS
Q210 DTC114YS
Q212 DTC114YS
Q214 2SC2878(B)
Q216 DTC114TS
Q218 DTC114TS
Q756 DTC114YS
Q757 DTC114TS
Q855 2SC2925(T)
Q851 DTC114YS
Q852 2SC2925(T)
Q854 2SC2925(T)
Q857 2SC2320(F)
Q859 2SC2320(F)
Q858 2SC2320(F)
Q805 2SC2925(T)
Q804 2SC2925(T)
Q807 2SC2320 (F)
Q801 DTC114YS
Q802 2SC2925(T)
Q803 2SA999(F)
Q806 2SC1740S(S)
Q219 DTC114YS
Q221 DTC114YS
Q222 DTC114YS
Q220 DTC114YS
TAKE-UP REEL SENSOR
SUPPLY REEL SENSOR
QUICK SENSOR
SECONDARY QUICK SENSOR
PRIMARY QUICK SENSOR
SECONDARY TAPE SPEED (HI)
PRIMARY TAPE SPEED (HI)
PRIMARY TAPE SPEED (NORMAL)
MUSIC SEARCH
RECORD LEVEL
BIAS TRAP
MS GAIN
MS OUT
TP601
TP202
LC202
Play
FF
Rew

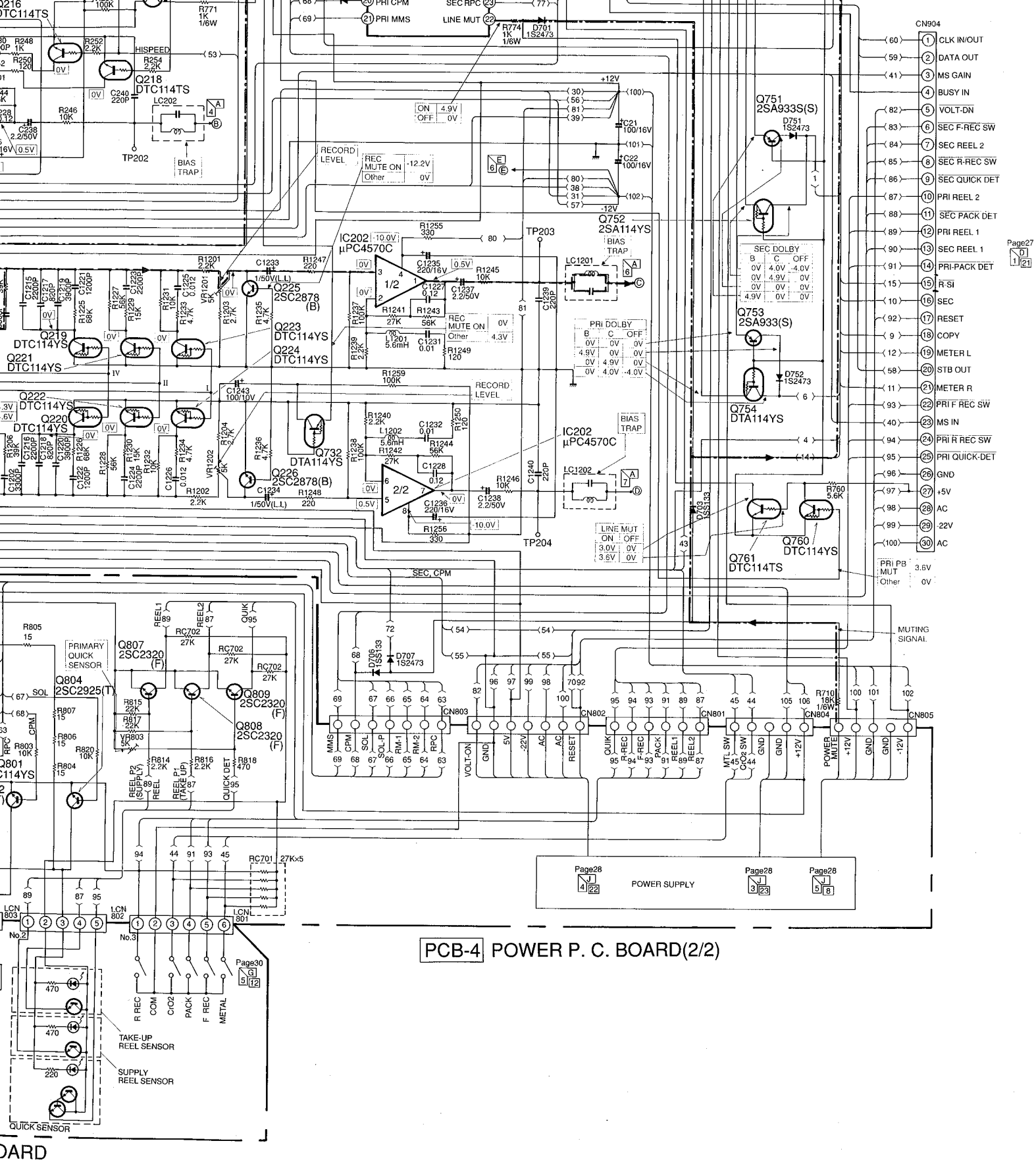

PCB-4 POWER P. C. BOARD(2/2)