DVD1

Digital Versatile Disc Player

Dolby Digital / DTS

PRELIMINARY

Service – Technical Manual

harman/kardon®

Power for the Digital Revolution.™

Harman International SNC – Harman Consumer International 2, route de Tours 72500 Château du Loir FRANCE

Safety information

Note: This unit can be used only where the power supply is AC 220-240V, 50Hz. It cannot be used elsewhere.

CAUTION:

DVD/CD PLAYER IS A CLASS I LASER PRODUCT. HOWEVER, THIS DVD/CD PLAYER USES A INVISIBLE LASER BEAM WHICH COULD CAUSE HAZARDOUS RADIATION EXPOSURE IF AIMED AT THE EYE. BE SURE TO OPERATE THE DVD/CD PLAYER CORRECTLY AS INSTRUCTED.

WHEN THIS DVD/CD PLAYER IS PLUGGED IN TO THE WALL OUTLET, DO NOT PLACE YOUR EYES CLOSE TO THE OPENING OF THE DISC TRAY AND OTHER OPENINGS TO LOOK INSIDE THIS PLAYER

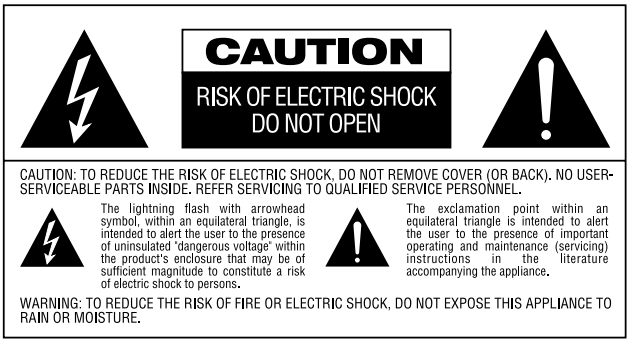

Dear Customers

May we take this opportunity to thank you for purchasing this DVD/CD player.

We strongly recommend that you carefully study the Operating Instructions before attempting to operate the unit and that you note the listed precautions.

The model number and serial number of this product can be found on either the back or the bottom of the unit. Please note them in the space provided below and retain this booklet as a permanent record of your purchase to aid identification in the event of theft.

MODEL NUMBER

SERIAL NUMBER

Features

DVD: a completely new dimension in video entertainment

- Subtitles may be displayed in one of a maximum of 32 languages*.
- The multi-angle function allows you to choose the viewing angle of scenes which were shot from a number of different angles (Limited to DVD recorded with multiple camera angles.)
- Advanced sophisticated 10-bit MPEG-2 video decoding circuits.
- Direct RGB output via SCART for optimum video performance.
- Second SCART connector for throughput of VCR or other video source to TVs with only one SCART input.
- Dual-layer compatibility for extended play DVD.

* *The number of languages recorded depends on the software.*

High quality digital audio

- By connecting a DTS (Digital Theater Systems) or a Dolby Digital decoder, you can enjoy high quality 5.1 digital surround sound from DTS or Dolby Digital discs.
- With linear PCM audio at 16-24 bits and 44-96 kHz (not on digital output, see table page 13), audio quality exceeding that of CD becomes possible.

Many convenient features

- On-Screen Menu Icons for disc information or player information and access to many major functions of this unit.
- Programming of up to 9 scenes in memory (markers)
- Parental lock settings to prevent play of discs unsuitable for some audiences [DVD only]
- Intuitive menu operating system.
- Separate Buttons for convenient Fast Forward/Fast Reverse Search and Track Skip.

Compatible with CD as well as DVD.

- The DVD1 will play any conventional Audio CD or erasable CD (CD-RW), bearing the logos as shown below as well as any DVD with the region code 0 or 2.

Disc formats supported by this player

The unit can play discs bearing any of the following marks:

DVD	CD	CD-RW
3" (8 cm) disc 5" (12 cm) disc	3" (8 cm) disc 5" (12 cm) disc	5" (12 cm) disc

Accessories

Remote control unit

Batteries for remote control unit (size “AA”)

Video/Audio Cable

Optional Accessories

S-Video Cable

Optical Digital Audio Cable

Coaxial Digital Audio Cable

Declaration of Conformity

CE

We, Harman Consumer International
2, route de Tours
72500 Château-du-Loir,
FRANCE

declare in own responsibility, that the product described in this owner’s manual is in compliance with technical standards:

EN 60 065:1993

EN 55 013/A12/8.1994

EN 55 020/12.1994

EN 61000-3-2/4.1995

EN 61000-3-3/1.1995

Carsten Olesen
Harman Kardon Europe
04/00

Technical specifications

Applicable Disc:	5 inch (12 cm) or 3 inch (8 cm) DVD-Movie, CD or CD-RW discs, Region 2 DVD-Movie Discs, DVD: Single Side/Single Layer, Single Side/Dual Layer, Dual Side, Dual Layer, Linear PCM, Dolby Digital or DTS Audio Discs	
Video Signal System:	PAL/NTSC	
Composite Video Output:	1 V p-p/75 Ohms, sync negative polarity	
S Video Output:	Y/Luminance: 1 V p-p/75 Ohms, sync negative polarity C/Chrominance: 0.286 V p-p	
Component Video Outputs:	Y: 1 V p-p/75 Ohms, sync, negative polarity Pr: 0.648 V p-p/75 Ohms Pb: 0.648 V p-p/75 Ohms	
Analog Audio Output:	2 Vrms max.	
Frequency Response:	DVD (Linear PCM):	2 Hz - 22 kHz +0/-0.5 dB (48 kHz sampling) 2 Hz - 44 kHz +0/-0.5 dB (96 kHz sampling)
	CD:	2 Hz - 20 kHz +0/-0.5 dB
Signal/Noise Ratio (SNR):	110 dB (A-weighted)	
Dynamic Range:	DVD: 100 dB (18 Bit) CD: 91 dB	
THD:	DVD/CD: 0.0025 %	
Wow & Flutter:	Below Measurable Limits	
AC Power:	220-240 V/50 Hz	
Power Consumption:	20 Watts (On)	
Dimensions (WxHxD):	440x108x330 mm	
Weight:	7 Kg	

All specifications subject to change without notice.

Harman Kardon and Power for the digital revolution are trademarks of Harman Kardon, Inc.
Manufactured under license from Dolby Laboratories. Dolby, AC-3, ProLogic and the double-D symbol are trademarks of Dolby Laboratories. Confidential. Unpublished Work. © 1992-1997 Dolby Laboratories, Inc. All rights reserved.
DTS is a trade mark of Digital Theater Systems, Inc.

This product incorporates copyright protection technology that is protected by method claims of certain U.S. patents and other intellectual property rights owned by Macrovision Corporation and other rights owners. Use of this copyright protection technology must be authorized by Macrovision Corporation and is intended for home and other limited viewing uses only unless otherwise authorized by Macrovision Corporation. Reverse engineering or diassembly is prohibited.

Front Panel

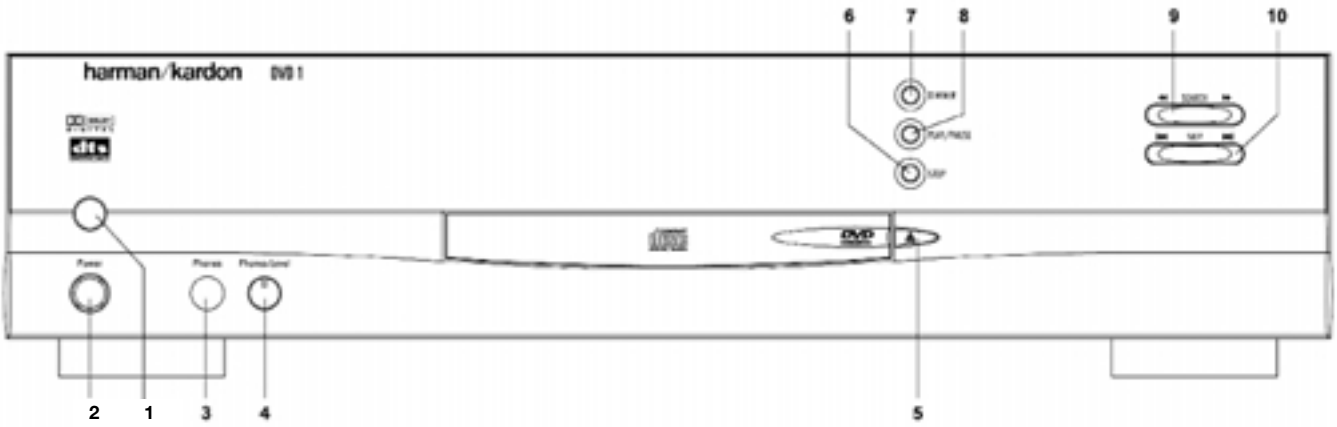

1. MAIN POWER ON/OFF
2. POWER ON/OFF (Standby)
3. PHONE JACK
4. PHONE LEVEL
5. OPEN/CLOSE
6. STOP
7. DIMMER
8. PLAY/PAUSE
9. SEARCH (REV & FWD)
10. SKIP (PREV & NEXT)

Remote Control

1. **POWER ON**
2. **POWER OFF**
3. **AUDIO**
4. **SUBTITLE**
5. **ANGLE**
6. **STATUS**
7. **TITLE**
8. **RETURN**
9. **SUBTITLE** ON/OFF
10. **ARROWS**
11. **ENTER**
12. **MENU**
13. **PLAY**
14. **SEARCH** (REV)
15. **SEARCH** (FWD)
16. **OPEN/CLOSE**
17. **PAUSE**
18. **STOP**
19. **PREV./NEXT**
20. **SLOW** (REV/FWD)
21. **RANDOM**
22. **STEP** (REV/FWD)
23. **NUMBER**
24. **PROGRAM**
25. **CHECK**
26. **CLEAR**
27. **LIGHT**
28. **REPEAT**
29. **A-B-Repeat**

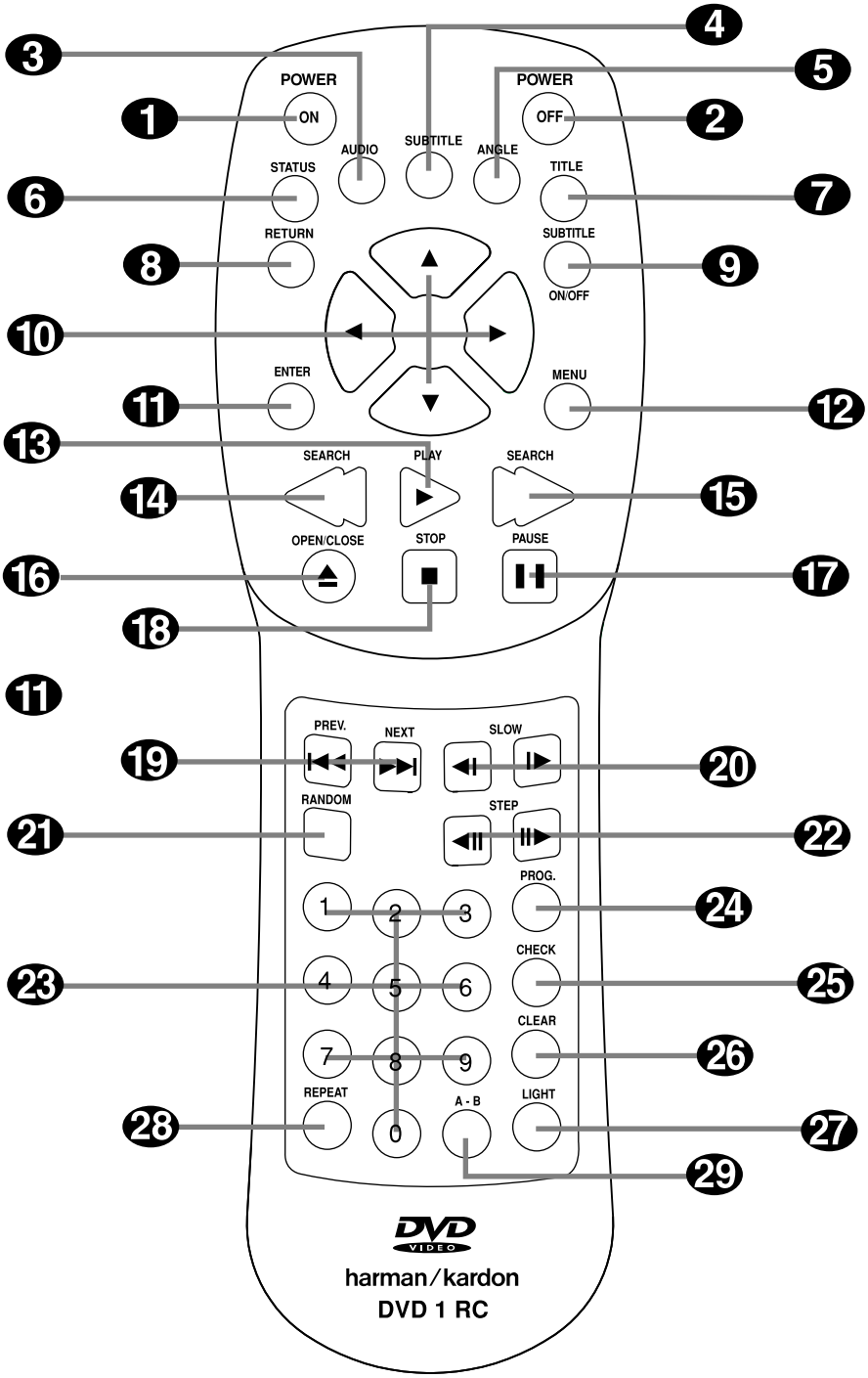

Remote Control

1. **POWER ON:** Turns on the player when it is in standby mode (Harman Kardon logo appears on screen).
2. **POWER OFF:** Turns off the player to standby mode.
3. **AUDIO:** Press to access various audio languages on a disc (If the disc contains multiple audio streams).
4. **SUBTITLE:** When a disc is playing, press to access subtitles menu (If the disc contains subtitles).
5. **ANGLE:** Press to access various camera angles on a disc (If the disc contains multiple camera angles).
6. **STATUS:** Press while playing a disc to see Banner Display on the screen. The Banner Display contains various playback features and information about the disc.
7. **TITLE:** When a disc is playing, press to see Title Menu on the screen (if the disc was created with Title).
8. **RETURN:** When using the DVD Player's menu system, press to return to preceding menu screen (depends on DVD title format)
9. **SUBTITLE ON/OFF:** Turns the subtitles on and off when playing a DVD (If the disc contains subtitles).
10. **ARROW** buttons (LEFT/RIGHT/UP/DOWN): Use to select and execute items or settings.
11. **ENTER:** Press to select a highlighted menu item.
12. **MENU:** Displays the DVD Disc Menu on the TV screen in play mode and Setup Menu in stop mode.
13. **PLAY**: Begins to play disc (closes disc tray first, if it is open.)
14. **SEARCH(REV):** Allows you to search in reverse through a disc while it is in play mode. Each time you press this button, search speed changes as below:
    DVD:
    R.SEARCH1 → R.SEARCH2 → R.SEARCH3 → R.SEARCH4 → R.SEARCH1 →
    CD:
    R.SEARCH1 → R.SEARCH2 → R.SEARCH3 → R.SEARCH1 →
15. **FWD(SEARCH):** Allows you to search forward through a disc while it is in play mode. Each time you press this button, search speed changes as below:
    DVD:
    F.SEARCH1 → F.SEARCH2 → F.SEARCH3 → F.SEARCH4 → F.SEARCH1 →
    CD:
    F.SEARCH1 → F.SEARCH2 → F.SEARCH3 → F.SEARCH1 →
16. **OPEN/CLOSE:** Press to open or close the disc tray.
17. **PAUSE:** Freezes a picture when a disc is playing. Press again for normal playback.
18. **STOP:** Stops playing a disc. When disc is playing, if you press STOP and PLAY, the disc will resume play. If you press STOP twice and PLAY button, disc will start play from the beginning.
19. **PREV./NEXT:** Allows you to move to the previous chapter or track / the next chapter or track on a disc.
20. **SLOW:** Allows you to play movie in slow mode. Each time you press this button, slow speed will be changed as below;
    F.SLOW 1/16 → F.SLOW 1/8 → F.SLOW 1/4 → F.SLOW 1/2 → F.SLOW 1/16

    R.SLOW 1/16 → R.SLOW 1/8 → R.SLOW 1/4 → R.SLOW 1/2 → R.SLOW 1/16
21. **RANDOM:** Press for RANDOM playback in, random order.
22. **STEP(REV/FWD):** Freeze a picture when a disc is playing. Also the picture advances frame by frame each time this button is pressed.
23. **NUMBER (0~9):** Select numbers by pressing these buttons.
24. **PROG:** Press to see Program Edit Display on the screen when in STOP mode.
25. **CHECK:** Press during playback to check the program status on VFD (front display). Press during stop mode for program edit on VFD.
26. **CLEAR:** Press to remove Banner menu from the screen or programmed tracks/chapters from the Program Edit Display.
27. **LIGHT:** Press to lilluminate remote controller.
28. **REPEAT:** Press to go to the Repeat menu. You can repeat a chapter, track or the entire disc.
29. **A-B:** Press to select section A-B and to play repeatedly.

FL Display

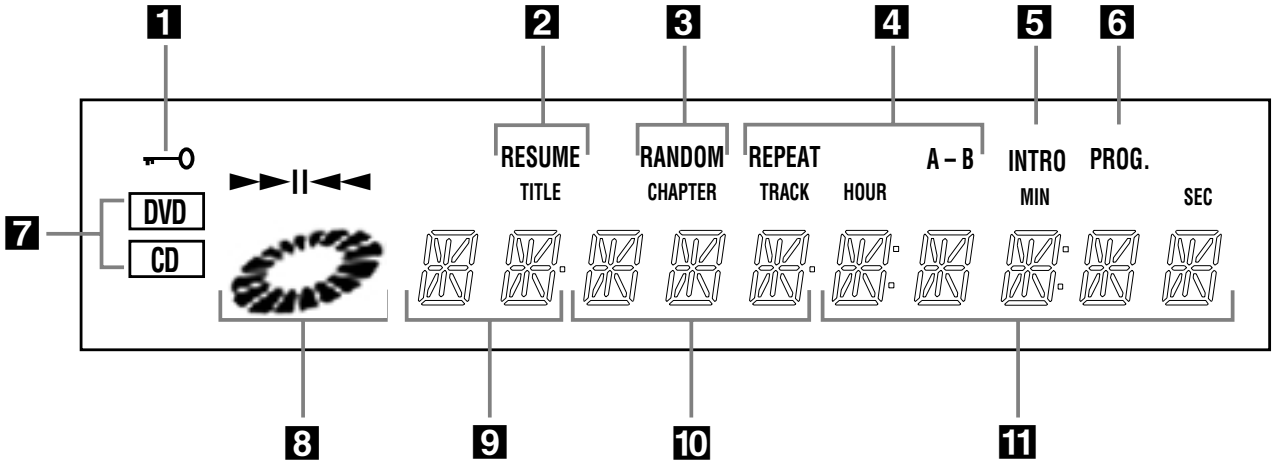

1. Illuminates in parental lock mode.

2. Illuminates when the player is ready to resume playback.

3. Illuminates during RANDOM playback.

4. Illuminates during repeat playback.

5. Illuminates during intro scan playback.

6. Illuminates during program playback.

7. Illuminates to indicate type of disc that is playing.

8. Illuminates and spins during search and slow playback & play and pause mode, indicating the play/search speed.

9. Illuminates to indicate current title number.

10. Illuminates to indicate the current chapter of DVD disc or track number of CD.

11. Illuminates to indicate playing time.

Rear Panel

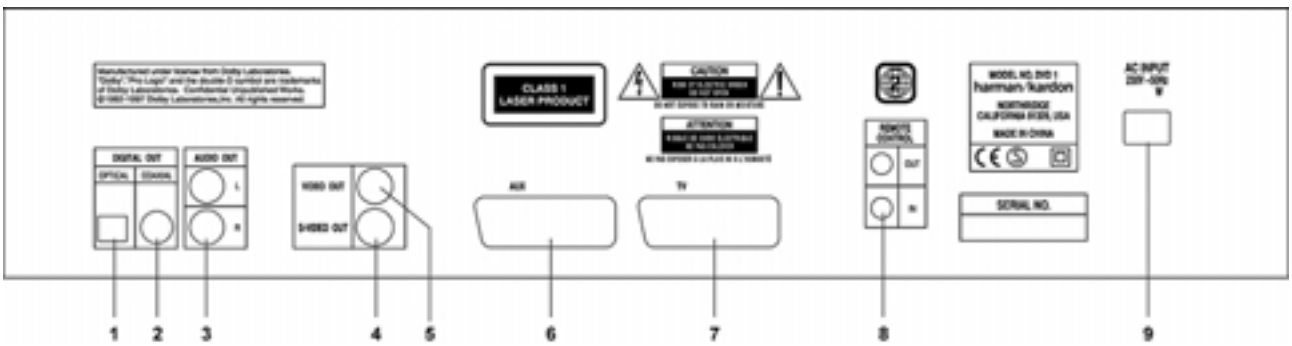

1. **OPTICAL OUT:** Use optical cable (not provided) to connect your DVD Player to a compatible Dolby Digital or DTS receiver or decoder. Dolby Digital and DTS offer theater-quality sound (5.1-Channels).
2. **COAXIAL OUT:** Use coaxial cable (not provided) to connect your DVD Player to a compatible Dolby Digital or DTS receiver or decoder. Dolby Digital and DTS offer theater-quality sound (5.1-Channels).
3. **AUDIO OUT:** Insert audio cables (left and right) to these jacks on your DVD Player and to the corresponding Audio Input jacks (left and right) on your TV or receiver.
4. **S-VIDEO OUT:** If your TV has an S-Video jack, you can connect an S-Video cable to your TV and to your DVD Player for improved video quality. The S-Video cable only carries the video signal; remember to connect the left and right audio cables.
5. **VIDEO OUT:** Connect a video cable to this jack and to the Video Input jack on your TV. The video cable only carries the video signal; remember to connect the left and right audio cables.
6. **SCART OUT (AUX):** If an external playback unit has a SCART socket, you can connect a SCART cable to it and to your DVD Player. The SCART cable carries both audio and video signals of the external unit. These signals will be routed through the SCART connector of the DVD to the TV when the DVD player is turned on.
7. **SCART OUT (TV):** If your TV has a SCART socket, you can connect a SCART cable to your TV and to your DVD Player for improved video quality. The SCART cable carries both audio and video signal. Your DVD1 is equipped with two SCART connectors, one for direct connection to the TV, the second for throughput of VCR (playback only) or any other playback video source to a TV with only one SCART input.
8. **Remote IR Input:** Connect the output of a remote infrared sensor or the remote control output of another compatible Harman Kardon product to this jack. This will enable the remote control to operate even when the front-panel Remote Sensor on the DVD 1 is blocked. This jack may also be used with compatible IR remote control based automation systems. Remote IR Output: Connect this jack to the IR input jack of another compatible Harman Kardon remote controlled product to have the built-in Remote Sensor on the DVD 1 provide IR signals to other compatible products.
9. **AC CORD (230V / 50Hz):** Plug AC Cord to an unswitched 220-240Volt AC outlet.

Note: you'll find more details about all Audio/Video connections under Setup and Connections on the following pages.

- Ensure that the power switch of this unit and other equipment to be connected is set to off before commencing connection.
- Do not block ventilation holes of any of the equipment and arrange them so that air can circulate freely.
- Read through the instructions before connecting other equipment.
- Ensure that you observe the color coding when connecting audio and video cables.
- Select the appropriate screen shape at the initial setting “TV Aspect ” according to your TV set (4:3 or 16:9), see page 26.

Connecting to a stereo TV set and stereo or Pro Logic Amplifier/Receiver

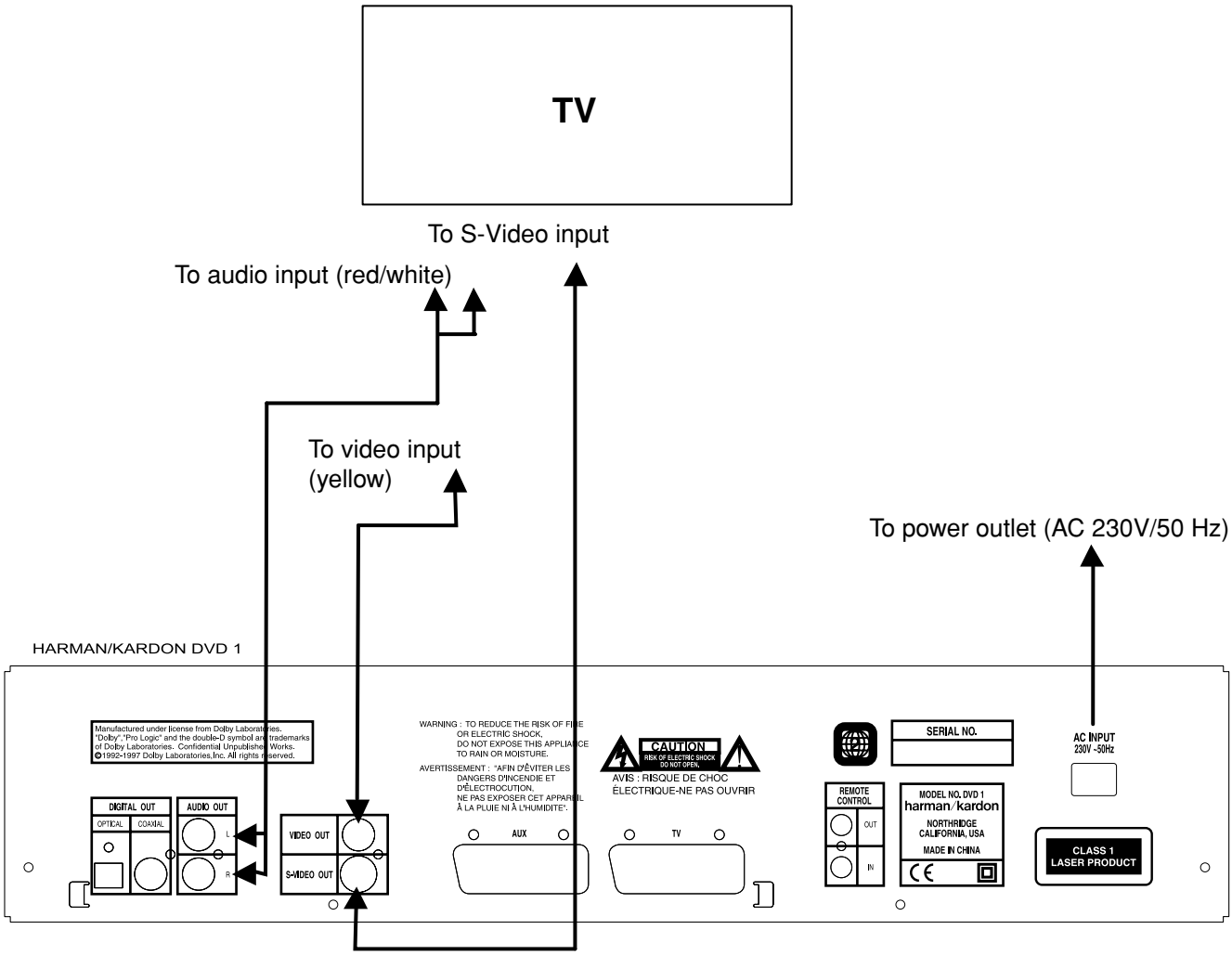

Note:

- If the DVD/CD player is connected to the TV through a video cassette recorder, the picture may not be played back normally with some DVDs. If this is the case, do not connect the player via the VCR.
- The S (separate) video output connector separates the color (C) and luminance (Y) signals before transmitting them to the TV set in order to achieve a sharper picture. Use the S-video cable (optional) when connecting the player to a TV set equipped with an S-video input for improved picture clarity.
- Most European TV´s are equipped with SCART connectors rather than with a normal video input (yellow cinch). In that case the SCART connection should be used, providing the audio signal too, (see page 8). Use separate analog audio connections to TV only if your TV is connected to the video or S-video output.
- When the audio signal is fed to stereo or Pro Logic amplifiers/decoders or receivers rather than to the TV, connect the Audio Out jacks to any normal audio input on your amplifier/decoder/receiver. The DVD1 will ”downmix” Dolby Digital recordings to Pro Logic, available on these connectors, all analog surround or stereo signals will be fed to them directly.

Connecting to a receiver/amplifier with Dolby Digital (AC-3) or DTS (Digital Theater Systems) decoder

When DVD´s encoded in Dolby Digital or DTS are played, the Dolby Digital or DTS bitstream is output from the player's OPTICAL or COAXIAL digital audio output. When the player is connected to a Dolby Digital or DTS decoder, you can enjoy theater-quality audio in your home. An optical digital audio cable or coaxial audio cable (both optional) is required for these connections, as shown below.

- **Note:** With multiple video sources, your Audio/Video device can be used for selecting the video signal and routing it to the TV. Connect the video or S-video output of the DVD1 (whatever is provided with your device) to the video or S-video input on your device and the video/S-video output of this device to your TV. For more details, see the manual of your Audio/Video amplifier/receiver.

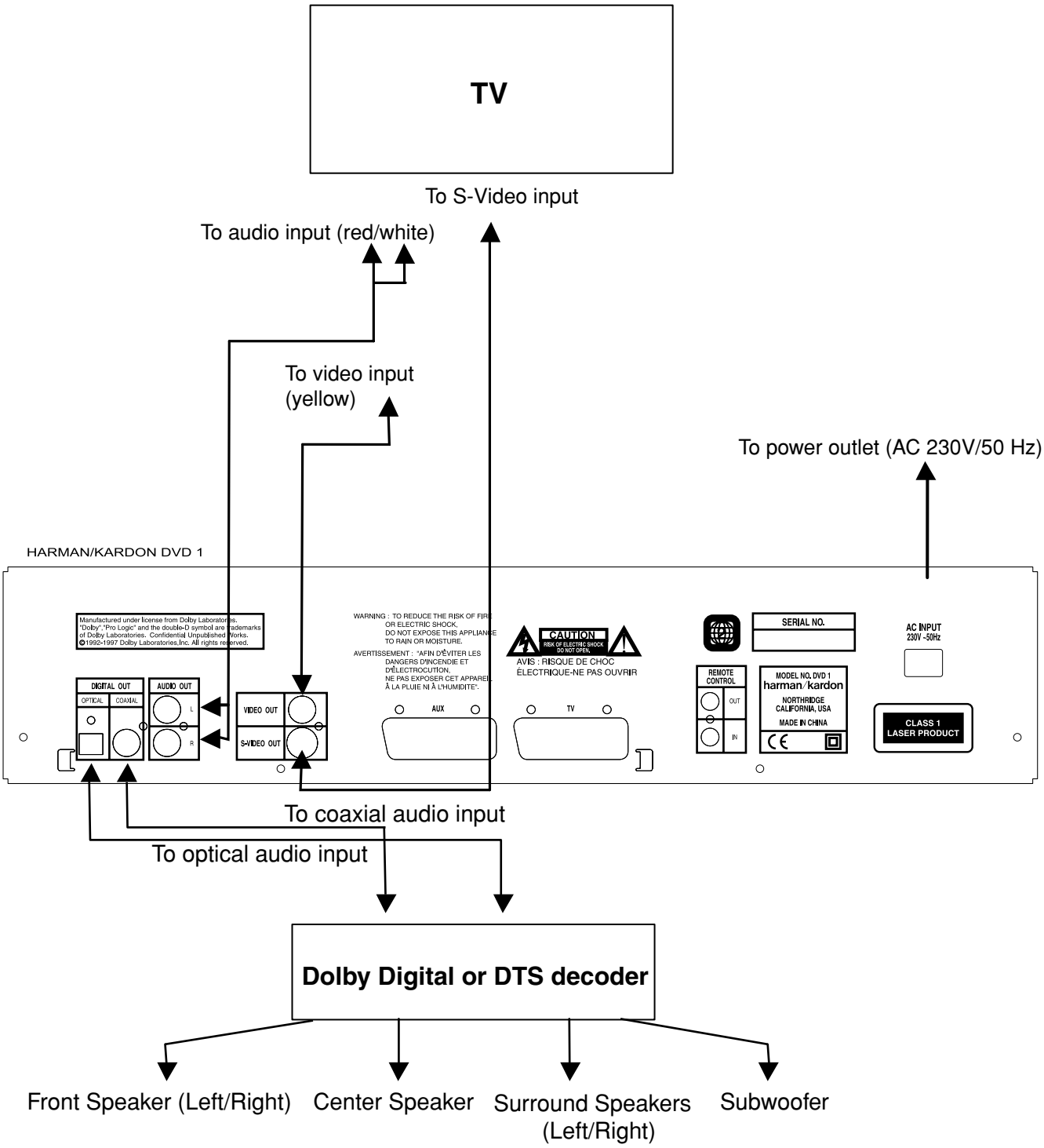

Connecting to a TV set or monitor with SCART connectors

Important Notes on SCART and RGB format:

- Your DVD1 is equipped with two SCART connectors, one for direct connection to the TV, the second (AUX) for throughput of VCR or any other video source to a TV with only one SCART input. The signal from this video source will be routed through the SCART connector of the DVD to the TV automatically when the unit plays (composite video only).
- Both SCART connectors provide the video signal as well as audio (stereo L/R) signals.
- The SCART connector for the TV provides the composite video signal as well as the direct RGB signal, delivering the best video performance possible. To view RGB video on your TV, the RGB compatible SCART connector must be used. Configure this connector to RGB (e.g. in the TV's menu), if necessary. Note that with RGB video the colour intensity cannot be adjusted.
- When the RGB video signal is used, DVD´s recorded with the NTSC format (with regional code "Zero") or 2 can be viewed on Non-NTSC compatible TVs.

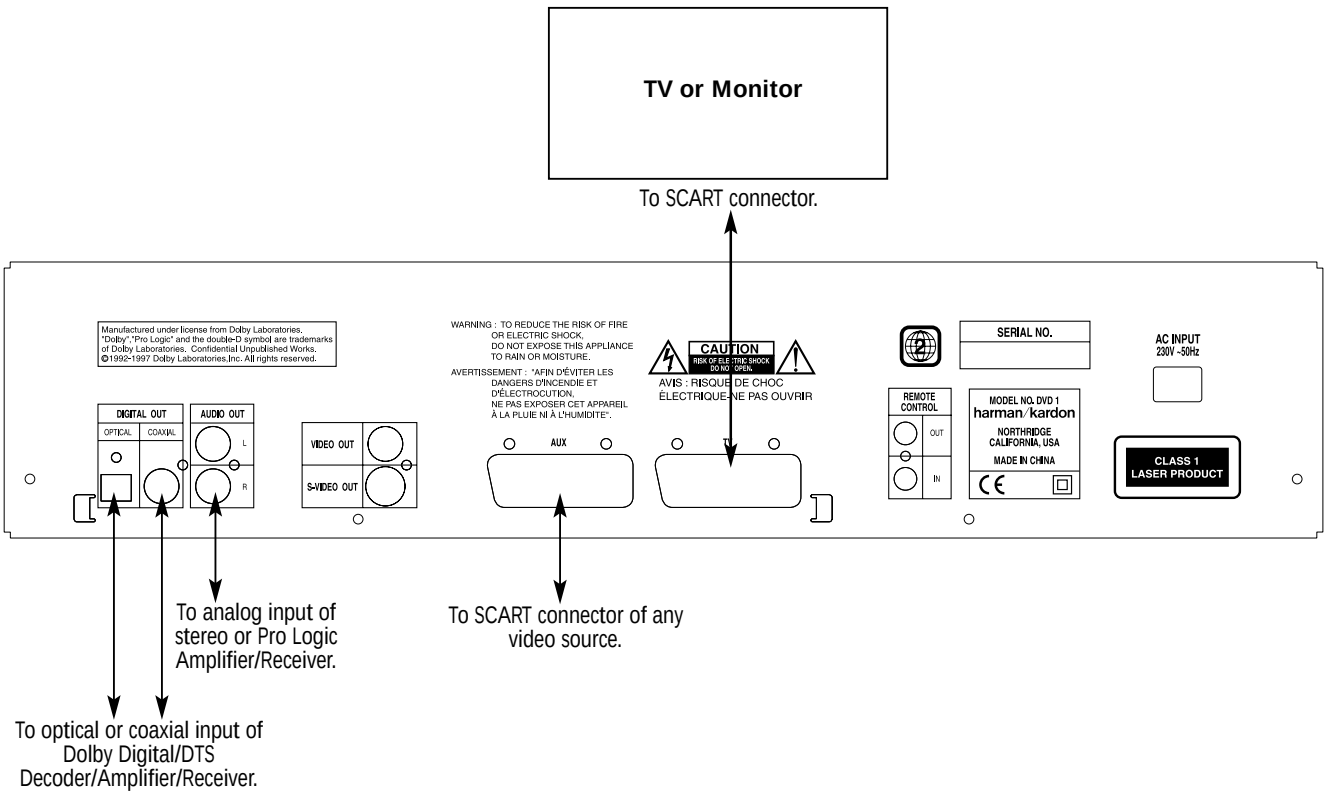

Remote control preparation

Battery installation

Insert the batteries while observing the correct (+) and (–) polarities.

Service life of batteries

- The batteries normally last for about one year, although this depends on how often, and for what operations, the remote control is used.
- If the remote control unit fails to work even when it is operated near the player, replace the batteries.
- Use size “AA” batteries.

Notes:

- Do not use rechargeable (Ni-Cd) batteries.
- Do not attempt to recharge, short-circuit, disassemble, heat or throw the batteries into fire.
- Do not drop, step on or otherwise impact the remote control unit. This may damage the parts or lead to malfunction.
- Do not mix old and new batteries.
- If the remote control unit is not going to be used for a long time, remove the batteries. Otherwise, leakage may lead not only to malfunction, but also to skin burn.
- Wipe away any leakage inside the remote control unit, and install new batteries.
- If leakage should come into contact with parts of your body, wash it off thoroughly with water.

Remote control operation range (see fig. A)

Point the remote control unit from no more than about 7 m from the remote control sensor and within about 60 degrees of the front of the unit.

- The operating distance may vary according to the brightness of the room.

Notes:

- Do not point bright lights at the remote control sensor.
- Do not place objects between the remote control unit and the remote control sensor.
- Do not use this remote control unit while simultaneously operating the remote control unit of any other equipment.

Connecting headphones (see fig. B)

1. Connect the headphones.

- Headphones with a 6.3 mm stereo plug can be connected.

2. Adjust the volume

Caution: Avoid listening to sound at levels which may be harmful to your ears.

Fig A.

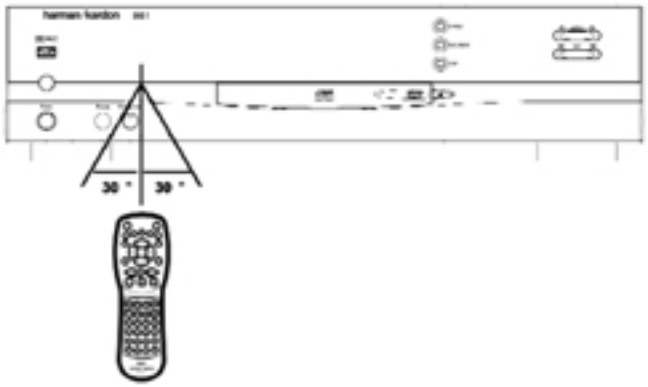

Fig B.

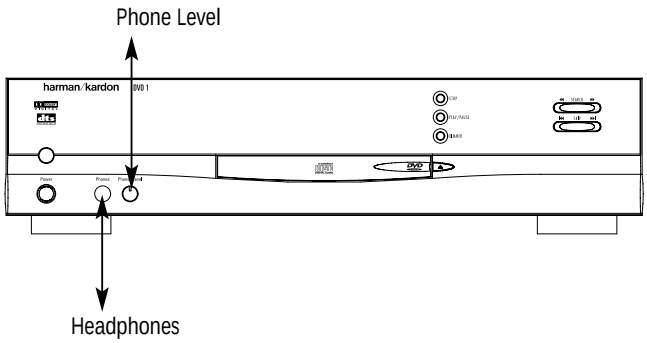

Optional audio connections

Audio from the optical/coaxial digital audio outputs.

- Remove the dust protection cap from the optical digital audio output and connect the cable firmly so that the configurations of both the cable and the connector match.
- Keep the dust protection cap and always reattach the cap when not using the connector.

Concerning the audio output from the unit's optical/coaxial digital audio output connector:

Disc:	Sound recording format:	Optical/Coaxial digital audio output
DVD	Dolby Digital (AC-3)	Dolby Digital bitstream (2-5.1ch) or PCM(2ch, 48 Khz/16bit) *1
	Linear PCM (48/96Khz 16/20/24bit)	Linear PCM (2ch) (48kHz sampling/16 bit only) *2
	DTS	Bitstream or no output *3
CD	Linear PCM	Linear PCM (44.1 kHz sampling)

*1 Digital Audio Output (see page 27) selected "Dolby Digital" or "PCM".

*2 For copyright protection sound with 96 kHz sampling is converted into 48 kHz sampling when it is output from the unit's optical/coaxial digital audio outputs, but high quality sound with full bit resolution is available on the analog AUDIO OUT connectors.

*3 Digital Audio Output selected "DTS" or other (see page 27).

For your reference:

Notes when connecting the optical digital audio cable (optional)

- Dolby Digital (AC-3) is a digital sound compression technique developed by the Dolby Laboratories Licensing Corporation. Supporting 5.1-channel surround sound, as well as stereo (2-channel) sound, this technique enables a large quantity of sound data to be efficiently recorded on a disc.
- Linear PCM is a signal recording format used in CDs. While CDs are recorded in 44.1 kHz/16 bit, DVDs are recorded in 48 kHz/16 bit up to 96 kHz /24 bit.
- If you have a Dolby Pro Logic Surround decoder connected to the DVD1's analog AUDIO OUT connectors, you will obtain the full benefit of Pro Logic from the same DVD movies that provide full 5.1-channel Dolby Digital soundtracks, as well as from titles with the Dolby Surround mark.

Caution for the optical/coaxial digital audio outputs:

- When connecting an amplifier (with an optical/coaxial digital input) which does not contain the Dolby Digital (AC-3) or DTS decoder, be sure to select "PCM" at "Dolby Digital" and "DTS" of the initial setting "Digital Audio Output" (see also page 27). Otherwise any attempt to play DVDs may cause such a high level of noise that it may be harmful to your ears and damage your speakers.
- CD´s can be played as they would normally be played.

Notes:

- Some DTS decoders which do not support DVD-DTS interface may not work properly with the DVD/CD player.
- When you use optical digital audio cable, please remove dust protection cap from Optical Jack on the rear panel.

Manufactured under license from Dolby Laboratories. "Dolby" and the double-D symbol are trademarks of Dolby Laboratories. Confidential Unpublished Works.1992-1997 Dolby Laboratories, Inc. All rights reserved.

Dolby Digital and DTS

Both Dolby Digital and DTS are audio formats used to record 5.1-channel audio signals onto the digital track of film. Both of these formats provide six separate channels: left, right, center, left rear, right rear, and common subwoofer.

Remember, that Dolby Digital or DTS will only play 5.1-channel sound if you've connected a DTS or Dolby Digital receiver or decoder and if the disc was recorded in the Dolby Digital or DTS format.

Dolby Digital is a trademark of Dolby Laboratories Licensing Corporation
DTS is a registered trademark of Digital Theater Systems.

Playing DVD Discs

Basic Play

Preparation

- Switch the TV ON and select "Video" as the TV input.
- Switch on the stereo system's power, if the player has been connected to a stereo system.

1. Press POWER ON to switch on the power.
2. Press OPEN/CLOSE to open the disc tray.
3. Place a disc onto the disc tray.

Hold the disc without touching either of its surfaces, position it with the side which you wish to play facing down, align it with the guides, and place it in its proper position.

- 3" (8 cm) discs or 5" (12 cm) discs can be used.

4. Press PLAY. The disc tray is automatically closed and play begins.

- When the disc tray is closed by pressing OPEN/CLOSE, play will start automatically.
- When a Disc Menu appears on the screen. In case of interactive DVDs, a Disc Menu appears on the screen. Select specific menu item by using ARROW buttons, then press ENTER.

Disc Playback Features

Fast Motion Playback (Picture Search)
To scan through the disc when you're playing it, use the Picture Scan feature.

1. Press SEARCH (FWD or REV) while playing a disc.
2. Press repeatedly to increase speed to 2 times, 4 times, 8 times or 16 times.
3. Press PLAY at any time to resume normal playback.

Notes: You won't hear the sound (audio) on the disc when using the picture scan feature. Playback features aren't available during the opeing credits of a movie. This is intended by the disc author and is not a failure of the DVD1.

Freeze Frame and Frame Advance

1. Press STEP (FWD or REV) when a disc is playing to freeze the picture
2. Each time you press the buttons, the picture advances one frame.
3. Press PLAY to resume normal playback.

Slow Motion Playback
While the disc is in play, pause or freeze frame mode, you can use slow motion playback.

1. Press SLOW (FWD or REV) on the remote when you're playing disc.
2. Press the buttons repeatedly to increase the slow motion playback speed to 1/16, 1/8, 1/4 or 1/2 of normal speed.
3. Press PLAY to resume normal playback.

Note: Playback features aren't available during the opening credits of a movie.

Using the On-Screen Banner Display

The on-screen Banner Display contains many playback features. To see the Banner Display, press STATUS on the remote while a disc is playing. Use the ARROW buttons on the remote to move through the different features in the Banner Display. Each feature is illustrated with an icon.

Use the ARROW buttons on the remote to highlight a Banner Display icon. When an icon is highlighted, press ENTER on the remote to select it.

Please remember you can only access the Banner Display when playing a disc. Also, each Banner Display feature is only available if the disc was created with that particular feature (i.e., if you select the Subtitle icon, you won't be able to change the subtitle language unless the author of the disc created the disc with subtitles).

The invalid symbol Ø appears on the screen when you press a button that doesn't have any function. If one of the icons is "grayed out," the Banner Display feature isn't available for the disc you're playing. To make the Banner Display disappear from the screen, press STATUS or CLEAR on the remote control.

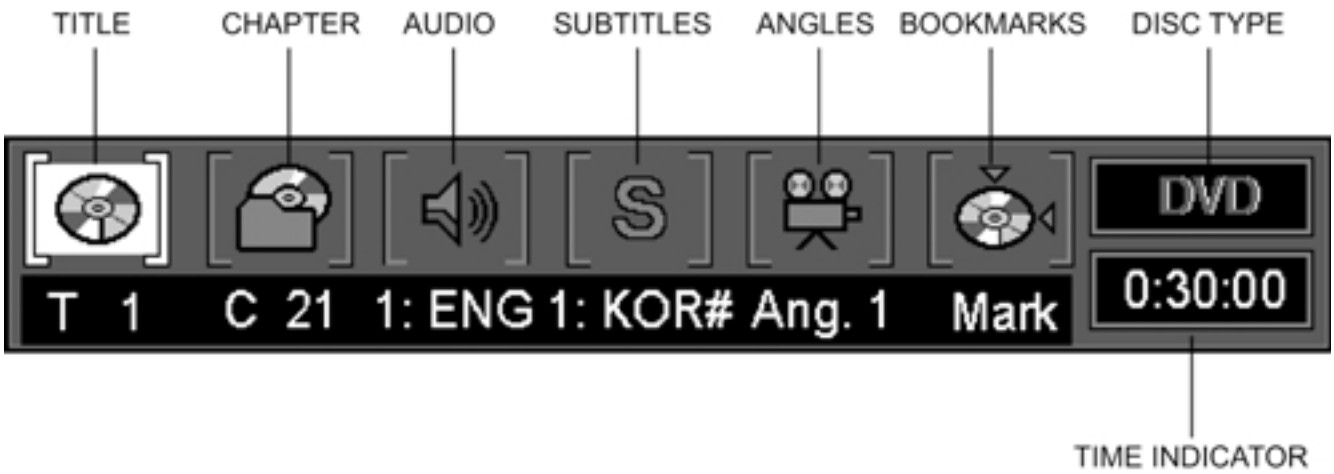

Selecting a Title

Some discs contain more than one title. For example, there might be four movies on one disc (each movie might be considered a title).

1. During disc playback, press STATUS on the remote.
2. Press the appropriate ARROW button(s) on the remote to highlight the Title icon.
3. Use the NUMBER button(s) on the remote to enter the title number. When you enter a one-digit Title number, you may have to press ENTER on the remote after pressing the NUMBER (1~9) on the remote. Otherwise press 0 first and the second digit. Then play starts. This varies depending on number of Titles on the disc you're playing.

Notes :

- Some discs only have one title.

Selecting a Chapter

Because DVD discs use digital technology, a title can be divided into individual chapters (similar to tracks on a CD). You can skip a specific chapter by using the Chapter section in the Banner Display.

1. While a disc is playing, press STATUS button on the remote.
2. Press the ARROW (RIGHT or LEFT) on the remote until the Chapter icon is highlighted.
3. Use NUMBER (0~9) on the remote to enter the number. When you enter a one-digit Capter number, you may have to press ENTER on the remote after pressing the NUMBER (1~9) on the remote. Otherwise press 0 first and the second digit. Then play starts. This varies depending on number of Chapters within the disc you're playing

Notes :

- The Chapter feature won't work if the disc isn't formatted with separate chapters.

Changing the Audio Language or Track

If the disc was created with different language or audio tracks, you can use the Banner Display to temporarily change the DVD player's Audio setting.

1. Press STATUS on the remote. Press the ARROW (LEFT OR RIGHT) on the remote until the Audio icon on the Banner Display is highlighted.
2. Press ENTER (the Audio Menu appears).

3. Press ENTER on the remote until the audio language you want to use appears in the text window.
4. To make the menu disappear from the screen, press CLEAR or STATUS on the remote.

Notes :

- The audio feature only works if the disc was created with multiple audio tracks.
- When you choose an audio language from the Banner Display, you only override the audio language setting in the DVD Player's main menu (in the Language Preferences menu within Setup menu) temporarily.
- Shortcut : You also can choose the audio language/track any time by pressing AUDIO on the remote control, regardless of whether the Banner Display is on the screen or not.

Changing the Subtitle Language

You can change the Subtitle language while you're watching a disc (but only if the disc was created with subtitles).

1. While a disc is playing, press STATUS on the remote.
2. Press the ARROW (LEFT OR RIGHT) until the Subtitle icon is highlighted.
   Press ENTER (the Subtitle menu appears).

3. Press ENTER on the remote to change subtitle language.
4. Each time SUBTITLE ON/OFF is pressed, the subtitle icon will blink.
5. To make the menu disappear from the screen, press the CLEAR or STATUS on the remote.

Notes :

- If you press SUBTITLE on remote when there is no Banner Display on screen, subtitle menu of current disc appears, pressing repeatedly will change subtitle language.
- The subtitle feature only works if the disc was created with subtitles.

Changing the Camera Angle

Some discs contain multiple angles of a particular scene or sequence. If the disc only has one angle, this feature won't work.

1. While a disc is playing, press STATUS on the remote (the Banner Display appears).

2. Press the ARROW (LEFT OR RIGHT) until the Camera Angle icon is highlighted, and press ENTER (the Angle menu appears).
3. Press ENTER or ANGLE on the remote to change angle.
4. To make the Banner Display disappear from the screen, press CLEAR or STATUS on the remote.

- Shortcut: The Angle menu can be called anytime, regardless of whether Banner Display is on or not, by pressing the ANGLE button on the remote, pressing repeatedly will change the angle (if disc was created with multiple angles).

Using Bookmarks

The bookmark feature lets you mark a point on the disc that you can go to quickly. You can store up to 9 bookmarks.

1. While a disc is playing, press STATUS on the remote.
2. Use the ARROW (LEFT OR RIGHT) on the remote until the Mark icon is highlighted and press ENTER (the Bookmark menu appears).

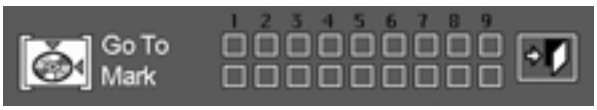

3. When you reach the scene you want to mark, press ENTER. To add any mark, move the cursor (yellow frame) with the ARROW (DOWN) to the "Mark" check line, then move it to the next free frame with the ARROW (RIGHT) and press ENTER when the scene you want to mark is reached.
4. Press CLEAR or STATUS on the remote to make the Banner Display disappear from the screen.

Recalling a Bookmarked Scene

1. While playing a disc, press STATUS on the remote (the Banner Display appears).
2. Press the ARROW (LEFT OR RIGHT) on the remote until the Bookmark icon is highlighted.
3. Press ENTER.
4. Press the ARROW (UP) on the remote to move to the "Go To" parts of the Bookmark menu.
5. Use the ARROW (LEFT OR RIGHT) on the remote to select the bookmarked scene you want to activate.
6. Press ENTER go to the bookmark.
7. To make the Banner Display disappear from the screen, press CLEAR or STATUS on the remote.

Clearing a Bookmark

The bookmark is cleared each time a disc is removed from the player or when the power is turned off completely (not to Standby only).

If all 9 bookmarks are in use, you can still mark new scenes, but the previous bookmarks will be erased.

Using the Repeat Feature

There are four Repeat options:

- Disc – Repeat the disc that is playing.
- Title – Repeat the title that is playing.
- Chapter – Repeat the chapter that is playing.
- A-B – Set the beginning (point A) and the end (point B) to make this part of the movie play repeatedly.

Repeat Play

1. While a disc is playing, press REPEAT on the remote (the Repeat Display appears).

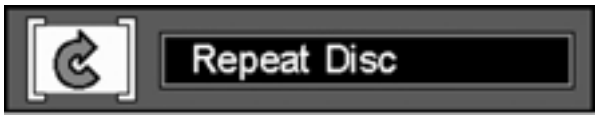

2. Access menus in the following order by pressing REPEAT on the remote repeatedly until the desired function is displayed .
   REPEAT DISC > REPEAT TITLE > REPEAT CHAPTER > REPEAT OFF
3. To make the menu disappear from the screen, press the CLEAR or STATUS on the remote or wait some seconds.

A-B Repeat Play

1. While a disc is playing, press A-B on the remote when you want to choose a scene as the beginning point (the Repeat A-B Display appears).

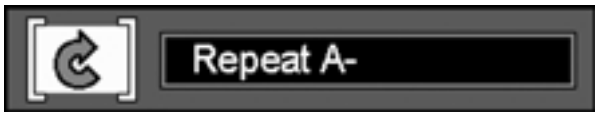

2. Press A-B again to choose a scene as the end point (Repeat A-B setting is done). A-B section will be played continuously.
3. Press A-B on the remote again to cancel repeat A-B mode, press twice, if Repeat display is no longer onscreen.
4. To make the menu disappear from the screen, press the CLEAR or STATUS on the remote or wait a few seconds.

Random Play

1. While a disc is playing, press RANDOM on the remote (the Random Display appears).

2. Each time you press RANDOM on the remote, Random play will turn on or off.
3. To make the Banner Display disappear from the screen, press the CLEAR or STATUS on the remote or wait a few seconds.

Note :

- If you want to cancel Random while a disc is RANDOM playing, press RANDOM on the remote again (Standard Play Display appears).

Program Play

Program Edit

1. In Stop mode, press PROGRAM on the remote (Program Edit Display appears).

- If there is no programmed Chapter on the playlist, the above Display appears when you press PROGRAM. The numbers below the TITLE and CHAPTER icons indicate the number of Titles on the disc and Chapters on any title selected.

2. Select specific Title by pressing ARROW (UP or DOWN) or holding it pressed (will quickly scan through title numbers). When title is selected, press ENTER or ARROW (right). You can also select title directly by entering its number with NUMBER (0~9) keys. Note that a "0" must be entered in front of a single number (depending on the total number of titles on disc).

3. Select chapter in the same way as above, then ADD will be highlighted automatically. Press ENTER to add selected chapter onto Playlist.

4. You can select maximum 32 items by repeating step 2.

5. When you complete program edit, select PLAY icon and then press ENTER on the remote or press PLAY on the remote to start program play.

Delete Program

1. To delete programmed Track/Chapter, press ARROW (RIGHT or LEFT) on the remote to Move Arrow icon to the Playlist.

2. Press ARROW (UP or DOWN) to select the Title/Chapter to be deleted. When it is highlighted (grey), press CLEAR or select DELETE icon on the Program Edit Display and press ENTER (Selected Value deletes).

Insert Chapter

Inserting chapters is possible only if chapters are already programmed on the playlist and will change the order of playback.

1. Press PROGRAM on the remote to insert Chapter (Program Edit Display appears).

2. To insert Chapter, move cursor to playlist and press ARROW (UP or DOWN) on the remote to select location where you want to insert a Chapter (will be inserted above icon highlighted grey). As soon as cursor is moved to programmed titles of playlist the above display appears.

3. Move cursor to TITLE icon and select title and chapter to be inserted as described in connection with Program Edit above.

4. Select INSERT icon on the Program Edit Display.

5. Press ENTER (Chapter would be inserted).

Stop Program Play

Program Play will be stop:

1. When you open tray.

2. When you turn Power off (to Standby).

3. When you press STOP twice. Then the red PROG indicator will disappear from display and the player will resume normal play mode, but the program will remain in memory and can be recalled by pressing PROGRAM again.

Note:

- When you finish adding values to Playlist and want to return to normal play mode, press RETURN or select DONE icon and press ENTER on the remote.

- While a disc is playing, press PROGRAM on the remote to start Program Play.

Set Up Menu

During STOP mode, if you press MENU on the remote, current Set Up Menu Display appears on the screen.

Audio Language

Select Audio Language

This step will define the default audio language (if disc was created with different language tracks). Choosing an audio language from the Banner Display (see page 9) will overwrite this setting only temporarily.

1. Press ARROW (UP or DOWN) on the remote to select Audio on the SET UP MENU DISPLAY.
2. Press ENTER or ARROW (right) , AUDIO MENU appears.

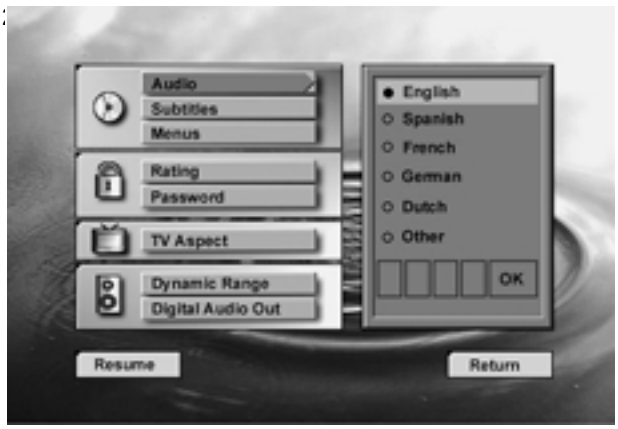

3. Press ARROW (UP or DOWN) on the remote to select specific Audio Language.
4. Press ENTER.
5. Press PLAY to resume normal playback or RETURN to delete Set Up Menu display.

• You can exit the Audio menu at any time by pressing the ARROW (left).

Select Other Language

1. Select Other and Press ENTER.

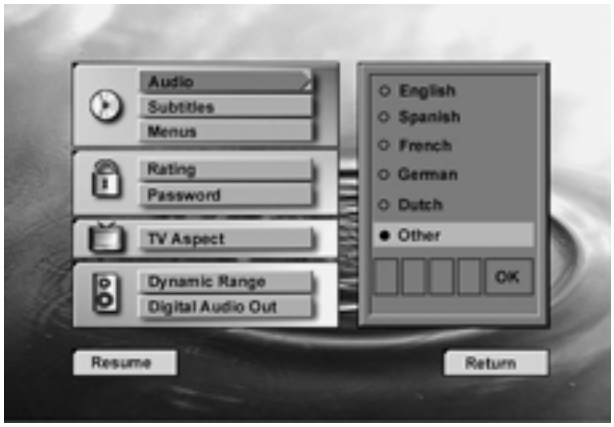

2. Input first number of language code (see table on page 32) into the first digit by pressing ARROW (UP or DOWN) on the remote, then ENTER or ARROW (right) and enter the other 3 digits the same way. The code can also be entered directly with the NUMBER (0~9) keys.
3. When cursor is on OK icon press ENTER.
4. Press PLAY to resume normal playback or RETURN to delete Set Up Menu display.

• If language selected is not available on disc, the language designated as default by each disc will be selected.

Subtitle Language

Select Subtitle Language
With this set up you define the default subtitle language (if disc was created with different language tracks). Choosing a subtitle language from the Banner Display (see page 9) will overwrite this setting only temporaily.

1. Press ARROW (UP or DOWN) on the remote to select Subtitles on the SET UP MENU DISPLAY.
2. Press ENTER or ARROW (right), Subtitle Menu appears.

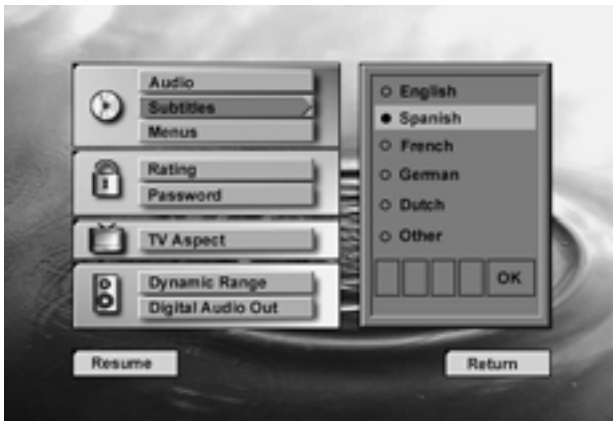

3. Press ARROW (UP or DOWN) on the remote to select specific Subtitle Language.
4. Press ENTER.
5. Press PLAY to resume normal playback or RETURN to delete Set Up menu display.

Select Other Language
1. Select Other and Press ENTER.

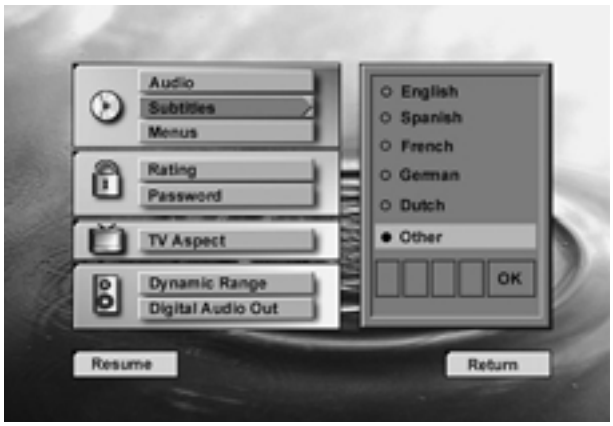

2. Input first number of language code (see table on page 32) into the first digit by pressing ARROW (UP or DOWN) on the remote, then ENTER or ARROW (right) and enter the other 3 digits in the same way. The code can also be entered directly with the NUMBER (0~9) keys.
3. Select OK icon and press ENTER.
4. Press PLAY to resume normal playback or RETURN to delete Set Up Menu display.

• If language selected is not available on disc, the language designated by each disc as default will be selected.

Menu Language

Define the language of the menus and other short messages shown on the screen.

1. Press ARROW (UP or DOWN) on the remote to select Menus on the SET UP MENU DISPLAY.
2. Press ENTER or ARROW (right), Menus Menu appears.

3. Press ARROW (UP or DOWN) on the remote to select specific Menu Language.
4. Press ENTER.
5. Press PLAY to resume normal playback or RETURN to delete the Set Up Menu display.

Rating

This chapter is to disable the playing of some DVDs (particulary U.S. types) which are insuitable for some audiences, for example children. These DVDs are encoded with a specific rating level. If the rating level of the disc is higher than the preset in the settings operations described in this chapter, playback of the disc will be prohibited unless the password memorized (see next page) is entered.

Set the rating level in the following way:

1. Press ARROW (UP or DOWN) on the remote to select Rating in SET UP MENU DISPLAY.
2. Press ENTER or ARROW (right), Rating Menu as shown below appears, when no password (see next page) is entered yet.

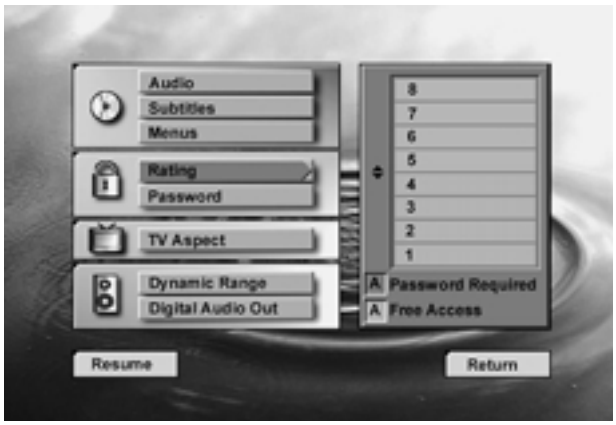

3. Press the ARROW (UP or DOWN) on the remote to select rating level (lowest blue highlighted number). As indicated below rating scale, all DVDs with a rating level within the blue number area will require password before being played, all those with rating level within the amber number area will have free access.
4. Press ENTER. The rating menu will disappear and rating level selected will be indicated in the Set Up Menu.

• If any password was memorized (see next page), rating menu is available only after correct password has been entered.

The rating levels:
The rating system is based on information encoded on the DVD disc being played, so movies may carry a rating symbol, the disc may or may not contain that rating in its software. In addition to the five standard (MPAA) rating symbols of "G" (level 2), "PG" (Parental Guidance, level 4), "PG13" (Parental Guidance and 13 years old, level 4), "R" (Restricted, level 6) and "NC17" (from 17 years old, level 7), the DVD1 will accommodate a total of eight rating steps, as set by the DVD creators. These additional steps allow for more critical control of program playback for all audiences.

Level 8: All DVDs can be played (Factory preset).

Level 7 to 2: DVDs for general audiences/children can be played.

Level1: DVDs for children can be played, DVDs for adults/general audiences are prohibited.

Level 0: Playback of all DVDs is prohibited (e.g. to prohibit playback of DVDs for adults which are not encoded with rating level information).

Password

Input Password
For disabling the playback of rated DVDs a password, consisting of four digits, must be entered:

1. Press ARROW (UP or DOWN) on the remote to select Password on the SET UP MENU DISPLAY.
2. Press ENTER or ARROW (right), Password Menu appears.

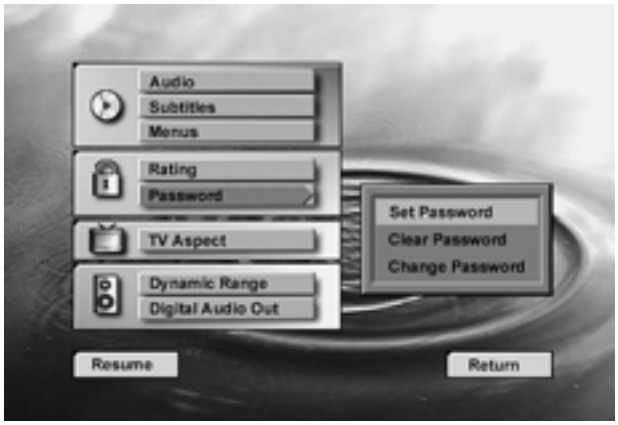

3. Select Set Password, press ENTER (Enter Password Display appears).

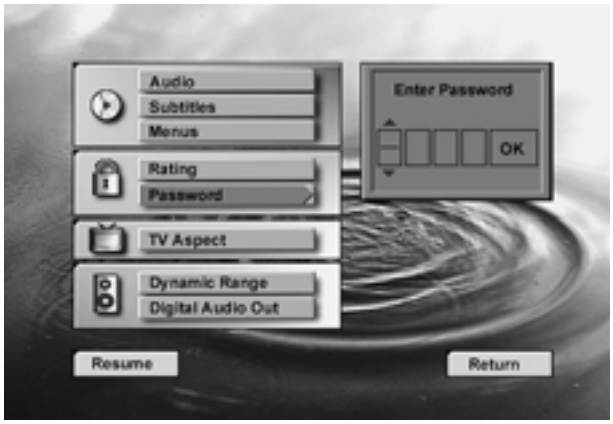

4. Press the ARROW (UP or DOWN) or NUMBER (0~9) on the remote to enter password.
5. Press ENTER to finish password input (Confirm Password display appears below Enter Password Display).

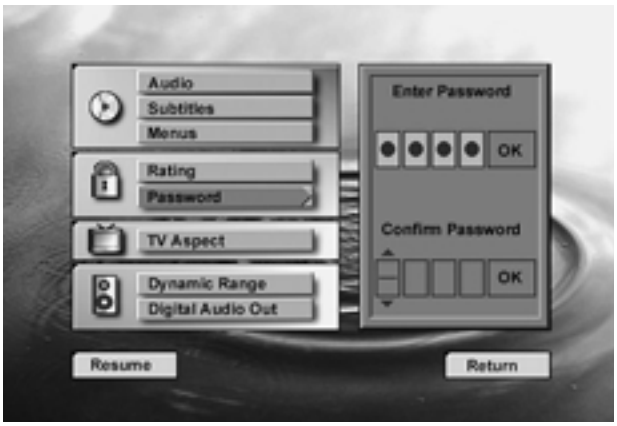

6. Press the ARROW (UP or DOWN) or NUMBER (0~9) on the remote to enter same password for confirmation.

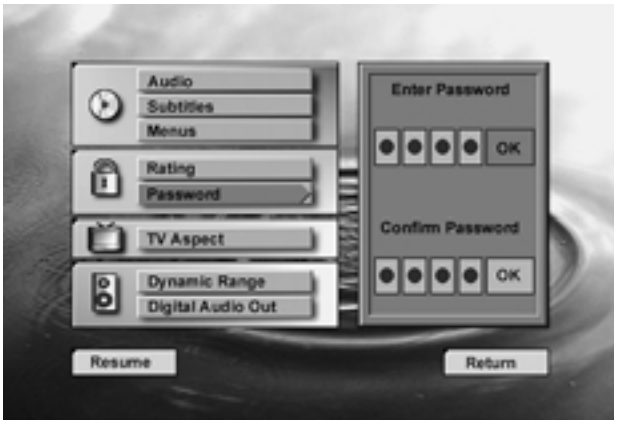

7. When incorrect password is entered, new password menu appears and you can enter and confirm the password again. This time, as help, the correct password is repeated in each digit of the "Try Again" menu and the incorrect password in the lower "Confirm Password" menu part , appearing after the upper is passed.
8. After the correct password is entered in all menus, press ENTER, the main password menu will return and a red key symbol appears in the front display. To return to Set Up Menu press ARROW (left). The lock symbol in the Set Up Menu appears closed to show that the rating is locked.

- After password is memorized, all password menus are available only after correct password is entered. If incorrect password is entered, new password menu appears where the correct password can be entered again.
- Note that the time delay before the password can be re-entered will increase with each attempt. This prevents attempts to find the correct password by trial and error.
- It's most important that you note the password in a safe place or remember it reliably as access to rated discs or rating/password menus or changing or clearing the password (see next pages) is not possible without entering the correct password.

Change Password
Password can be changed a any time but first the current password must be entered:

1. Press ARROW (UP or DOWN) on the remote to select Password on the SET UP MENU DISPLAY.
2. Press ENTER or ARROW (right), Enter Password Display appears.

3. Press the ARROW (UP or DOWN) or NUMBER(0~9) on the remote to enter the actual password and press ENTER again, Password Display appears.

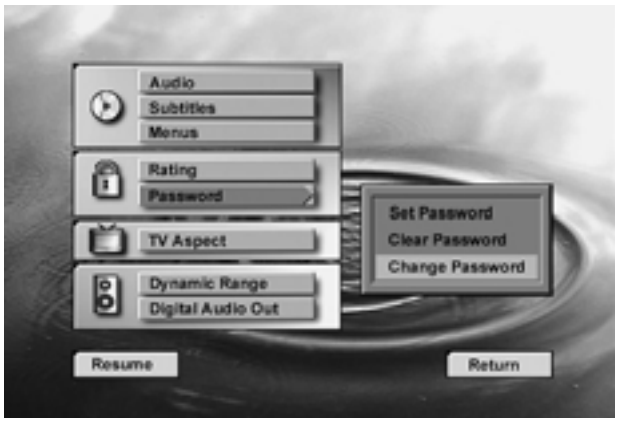

4. Press ARROW (UP or DOWN) on the remote to select Change Password and press ENTER (Enter Password Display appears again).
5. Enter new password, press ENTER (Confirm Password Display appears).

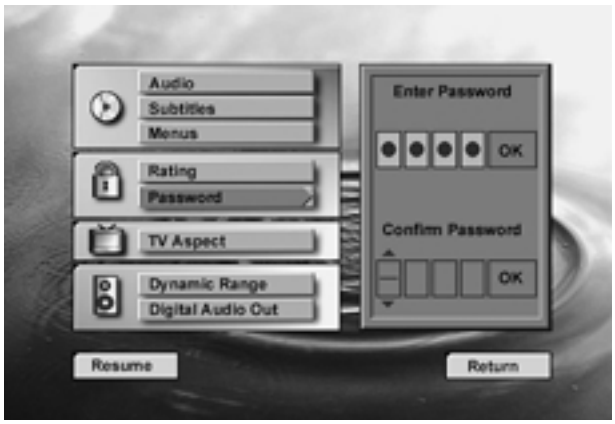

6. Press the ARROW (UP or DOWN) or NUMBER (0~9) on the remote to enter same password - for confirmation.

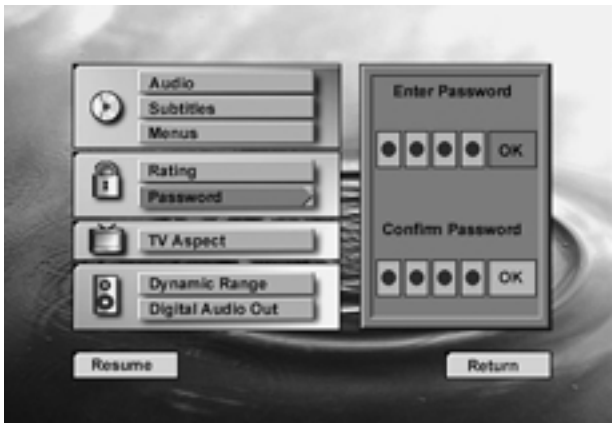

7. After new password is entered correctly in all menus, press ENTER. The main password menu will return. To return to Set Up Menu, press ARROW (left).

Clear Password

Password can be cleared easily, but first the current password must be entered:

1. Press ARROW (UP or DOWN) on the remote to select Password on the SET UP MENU DISPLAY.
2. Press ENTER or ARROW (right), Enter Password Display appears.

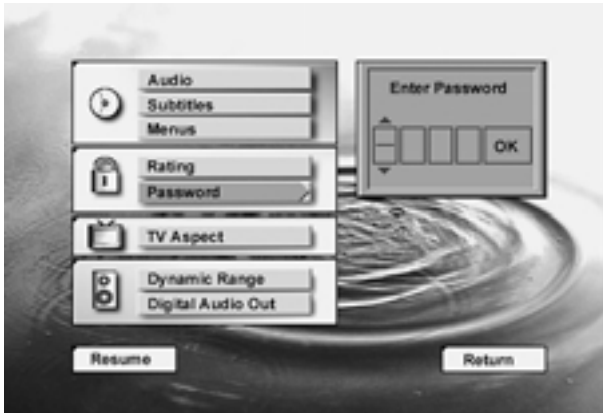

3. Press the ARROW (UP or DOWN) or NUMBER(0~9) on the remote to enter the current password and press ENTER again, Password Display appears.
4. Press ARROW (UP or DOWN) on the remote to select Clear Password.

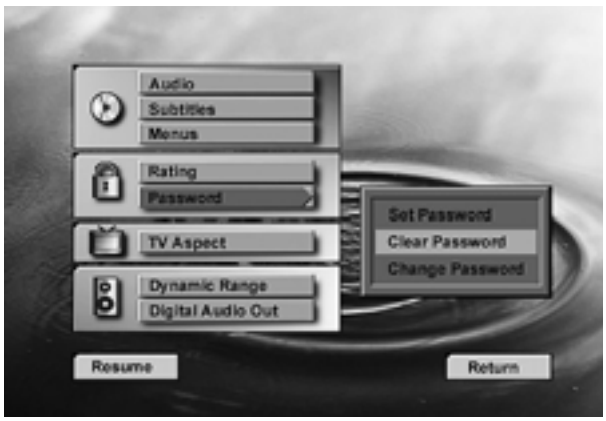

5. Press ENTER, Password is cleared.
6. To return to Set Up Menu, press ARROW (left). To delete the Set Up Display, press RETURN.

TV Aspect

This step selects the TV aspect, conventional screen shape (4:3) or widescreen (16:9), according to your TV set:

- 4 x 3 letterbox : Choose this setting if the DVD1 is connected to a conventional (4:3) TV set and you would prefer to see movies in their original aspect ratio. You will see the entire frame of the movie and DVDs recorded with normal 4:3 format will fill the entire screen. But movies in widescreen will occupy a smaller portion of the screen, with black bars at the top and bottom of the screen.
- 4 x 3 Pan Scan : Choose this setting if the DVD1 is connected to a conventional (4:3) TV set and you want widescreen movies to fill the entire screen. You won't see parts of the picture (particularly the right and left edges).
  Many discs produced in a wide screen format can't be cropped in this fashion, which means the black bars will appear at the top and bottom of the screen (letterbox format). Some widescreen DVDs, particulary anamorph types (with full vertical line resolution), may be shown with original width but spread vertically. With those disc the letter box format must be selected.
- 16 x 9 Widescreen : Choose this setting if your DVD player is connected to a widescreen TV or to a conventional (4:3) TV, set to widescreen (16:9) mode.
  With this set up, widescreen discs will be shown optimally, i.e. with full vertical resolution. With some 4:3 TV, set to 16:9 format, discs with 4:3 format may be played compressed vertically. With those discs the TV must be set to 4:3 format.

To select TV Aspect follow these steps:

1. Press ARROW (UP or DOWN) on the remote to select TV Aspect on the SET UP MENU DISPLAY.
2. Press ENTER or ARROW (right), TV Aspect Menu appears.

3. Press ARROW (UP or DOWN) on the remote to select specific TV Aspect Menu.
4. Press ENTER.
5. Press PLAY to resume normal playback or RETURN to delete Set Up Display from screen.

Dynamic Range

This setting enables Dolby Digital recordings to be played back with full dialogue intelligibility while reducing peak levels and increasing low levels by 1/4 to 1/3. This smooth level compression prevents abrupt loud transitions from disturbing others without reducing the impact of the digital source perceptibly.

To select Dynamic Range Compression:

1. Press ARROW (UP or DOWN) on the remote to select Dynamic Range on the SET UP MENU DISPLAY.
2. Press ENTER (Dynamic Range Menu appears).

3. Press ARROW (UP or DOWN) on the remote to select dynamic range mode (on or off).
4. Press ENTER.
5. Press PLAY to resume normal playback.

- This function only works with Dolby Digital DVD and in conjunction with the Dolby Digital Decoder connected to the digital output of DVD1, depending on its "Night Mode" setting:
- When Dynamic Range is off, normal audio range is selected.
- When Dynamic Range is On and "Night Mode" on decoder is off, normal audio range is selected.
- Dynamic compression is activated only when Dynamic Range on DVD1 is on AND "Night Mode" on the decoder is on.

Digital Audio Out

This setting determines the digital signal format to be output from the optical/coaxial digital audio output of the DVD1. The optimal setting will depend on the digital decoder connected to that output.

- PCM: Choose this setting if the decoder connected to the digital output is able to decode only normal PCM data rather than Dolby Digital or DTS. PCM and Dolby Digital tracks will be output as PCM datastream only, DTS tracks will output no signal (see also comment in "Dolby Digital" below).
- Dolby Digital: Choose this setting if you connected a Dolby Digital receiver or decoder to your DVD player, but without DTS decoder. PCM and Dolby Digital tracks will be output, DTS tracks will output no signal (see also information note below). But with virtually all DTS discs a 2-channel digital audio track can be selected as other Audio Track (by pressing the Audio button on remote, see page 16), that will deliver PCM signal to the digital output.
- DTS: Choose this setting if you connected a receiver or decoder to your DVD player with Dolby Digital and DTS decoding. Then all recordings will be output and played, whether PCM, Dolby Digital or DTS format.

To select Digital Audio Output format follow these steps:

1. Press ARROW (UP or DOWN) on the remote to select Digital Audio Out on the SET UP MENU DISPLAY.
2. Press ENTER or ARROW (right), Digital Audio Out Display appears.

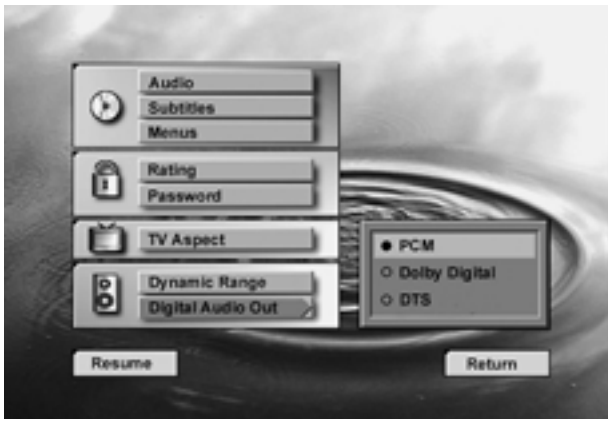

3. Press ARROW (UP or DOWN) on the remote to select specific Digital Audio Out Menu.
4. Press ENTER.
5. Press PLAY to resume normal playback or RETURN to delete Set Up Display from screen.

Important : DTS information
If you set the Digital Audio Out Menu to DTS, to listen to DTS you must have your DVD player connected to a receiver or DTS decoder with DTS decoding and the disc you play must contain DTS audio. If you choose DTS and you play a DTS disc, but your receiver or decoder doesn't support DTS, you won't hear any audio when you play the disc.

Playing CDs

Compatibility of Discs

Before you load a disc, make sure that it is compatible with the player.

Note that the following discs CANNOT be used with this player.

- Laserdisc
- CD-I, CD-ROM, CD-R, DVD-ROM
- MiniDisc
- CD-RW (erasable CD) with low reflectivity, those with high reflectivity will be accepted and played (if finalized, see also page 3).

To Load and Play an Audio CD

Make sure that you have properly connected the DVD player

1. Press OPEN/CLOSE on the front of the DVD player or on the remote (the disc tray opens).
2. Place a disc gently into the tray with the disc's label facing up.
3. Press PLAY to close the disc tray.
   The DVD player reads the disc's table of contents and the disc starts to play.
4. To search forward or reverse through the track, press SEARCH (forward/reverse) on the remote or on the front panel. To pause play, press PAUSE on the remote or PLAY/PAUSE on the front panel. To release the pause, press PAUSE or PLAY on remote or PLAY/PAUSE on front panel again.
5. Press STOP to stop playback.

Audio CD Playback Features

When playing audio CDs, your DVD player has the same features as a CD player, including track skip, repeat play and programmed playback. The on-screen Info Display, appearing when REPEAT or RANDOM is pressed (see page 30), and the Banner Display shown below, appearing automatically when the CD is played, let you choose various playback features.

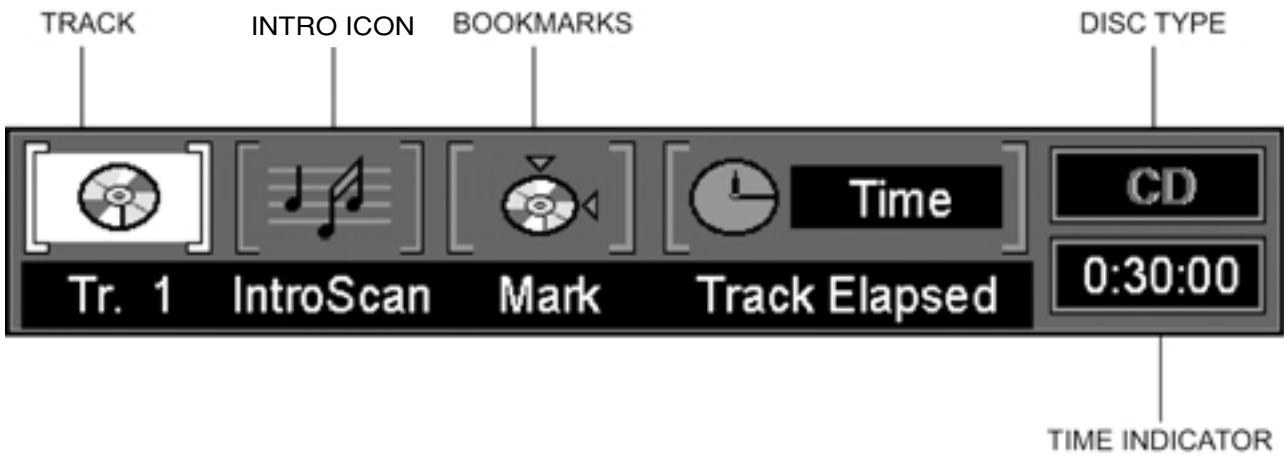

Using the Banner Display

As soon as a CD is played the Banner Display will appear automatically. To delete it from screen, press STATUS or CLEAR on the remote, to re-access it, while the CD is playing, press STATUS again. The Banner Display cannot be accessed in Stop mode, only in Pause or Play mode. In the Display some of the playback features are illustrated with an icon. To access a feature, press the appropriate ARROW on the remote to highlight the icon. Each feature is described in the following pages.

Note:
To see the Info Display, you must turn on your TV and tune it to the appropriate Video Input Channel.

Selecting a Track

1. During disc playback, enter the track number directly with the NUMBER (0~9) buttons on the remote or press STATUS on the Remote to see Banner Display on the screen if it's not on already (as normally in play mode).
2. Press ARROW (RIGHT or LEFT) on the remote to highlight the Track No icon if not already highlighted (in play mode this icon is highlighted automatically). Enter the Track NUMBER(0~9) on the Remote to select Track No.

- In Pause or Play mode any track can be selected directly by entering its number with the NUMBER(0~9) buttons on the remote, no matter if the Banner Display is on or not. To select tracks from Stop mode, press Play and enter the track number directly.
- You can skip through tracks forward or backward by pressing the NEXT/PREV. buttons (track skip ▶▶I / I◀◀) on the remote or SKIP (forward/reverse) on the front panel. When you hold these buttons pressed, track numbers will be skipped, the formerly played track will continue until buttons are released, then the selected track will be played.

Using IntroScan

IntroScan plays the first few seconds of each track on the CD-similar to the scan feature on many car radios. To use IntroScan :

1. Press STATUS on the remote if the banner Display is not on already.
2. Press the ARROW (RIGHT or LEFT) on the remote to highlight the IntroScan icon. Press ENTER, the INTRO indicator will appear in the front panel display and the first 10 seconds of each track will be played.
3. After IntroScan has gone through all of the tracks, it stops.
4. If you want to stop IntroScan while it's in progress, just press PLAY on the remote, the INTRO indicator is deleted and the current track is played normally.

- IntroScan cannot be used with Program play (see page 31). If intro is selected while a program is played, all tracks on disc will be played with intro.

Using Bookmarks

The bookmark feature lets you mark a point on the disc that you can go to quickly. You can store up to 9 bookmarks.

Entering Bookmarks

1. While a disc is playing, press STATUS on the remote to see the Banner Display (if not already on).
2. Use the ARROW (RIGHT or LEFT) until the Bookmark icon is highlighted and press ENTER (the Bookmark menu appears).

3. When you reach the place on disc you want to mark, press ENTER.
4. To add marks, move the cursor (yellow frame) with the ARROW (DOWN) to the "Mark" line (if not already there), then move the cursor to the next free frame with the ARROW (RIGHT). Select the track you wish to mark and press ENTER when the next place on disc you want to mark is reached.
5. Press CLEAR on the remote to make the Banner Display disappear.

Recalling a Bookmarked Track

1. While you're playing a disc, press STATUS on the remote to see the Banner Display (if not already on).
2. Press the ARROW (RIGHT or LEFT) on the remote until the Bookmark icon is highlighted.
3. Press ENTER .
4. Press the ARROW (UP) to move to the "Go To" parts of the Bookmark menu.
5. Use the ARROW (RIGHT or LEFT) arrow to select the Bookmarked Track you want to activate.
6. Press ENTER to go to the bookmark.
7. To make the Banner Display disappear from the screen, press CLEAR in the remote.

Clearing a Bookmark

The bookmark is cleared each time a disc is removed from the player or when the power is turned off completely (not to Standby only).

If all 9 bookmarks are in use, you can still mark new scenes, but the previous bookmarks will be erased.

Selecting Time Display

The time display in the front panel display or at the right of the Banner Display can be selected too:

1. If Banner Display is on, press ARROW (right) on the remote to highlight the Time icon
2. In normal operation the running time of the track being played is displayed, the Banner Display reads the Track Elapsed Time.
3. Press the ENTER button once to display the Track Remain Time, press again to display the elapsed time of all tracks played (Disc Elapsed Time). If you press ENTER a third time the Disc Remain Time will be displayed.

- All time indications are available also with Program play (see page 31).

Using the Repeat Feature

There are three Repeat options:

Repeat Disc : Repeat the disc or program that is playing.

Repeat Track : Repeat the Track that is playing.

Repeat A-B : Set the beginning (point A) and the end (point B) to make this part of the CD play repeatedly.

Repeat Play

1. While a disc is playing, press REPEAT on the remote (the Repeat Display appears).

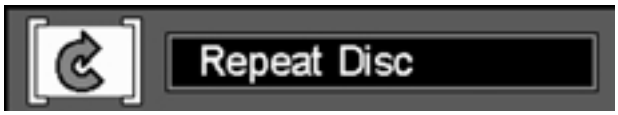

2. Select Repeat function in following order each time you press REPEAT on the remote:
   REPEAT DISC → REPEAT TRACK → REPEAT OFF.
   When Repeat Track is selected, REPEAT TRACK is indicated in the front panel display, while TRACK is flashing. When Repeat is off REPEAT will disappear from the front panel display.
3. To make the menu disappear from the screen, press CLEAR on the remote.

- If Repeat Disc is selected with Program play (see next page), the complete program will be repeated. Note that Repeat Track is not available with Program play.

A-B Repeat Play

1. While a disc is playing, press A-B on the remote when you want to choose a beginning point (the Repeat A-B Display appears).

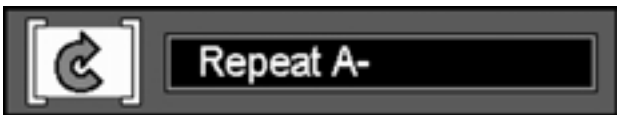

2. Press A-B again to choose a sound as the end point (Repeat A-B setting is done), A-B section will be played continuously and REPEAT A-B appears in the front panel display.
3. Press A-B on the remote again to cancel repeat A-B mode, press twice if the Repeat Display has disappeared from screen.
4. To make the menu disappear from the screen, press CLEAR or STATUS on the remote or wait a few seconds.

Random Play

1. While a disc is playing, press RANDOM on the remote (the Random Display appears).

2. Each time you press RANDOM on the remote, Random play will turn on or off.
3. To make the Banner Display disappear from the screen, press CLEAR or DISPLAY on the remote or wait a few seconds.

Note :

- If you want to cancel Random while a disc is RANDOM playing, press RANDOM on the remote again (Standard Play Display appears).

Program Play

Program Edit

1. In Stop mode, press PROGRAM on the remote (Program Edit Display appears).

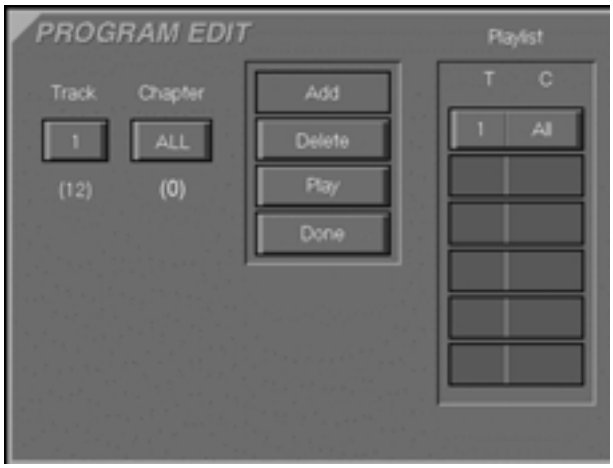

- If there is no programmed Track on the playlist, the above Display appears when you press PROGRAM. The number below the TRACK icon indicates the number of Tracks on the disc (there are no Chapters on CDs).

2. Select specific Track by pressing ARROW (UP or DOWN) on the remote or holding it pressed (will scan through title numbers). If track is selected, press ENTER or ARROW (right) twice. You also can select track directly by entering its number with NUMBER (0~9) keys (note that a "0" must be entered in front of a single number, depending on the total number of titles on disc), then press ENTER or ARROW (right) once.

3. When ADD icon is highlighted, press ENTER to add selected track to playlist.

4. You can select maximum 32 Tracks by repeating step 2.

5. After you complete program edit, select PLAY icon on Program Edit Display and press ENTER or press PLAY on the remote to start program play. A red PROG indicator will light in the front panel display and program will be played.

Delete Program

1. To delete programmed Track, press ARROW (RIGHT or LEFT) on the remote to move Arrow icon to the playlist.

2. Press ARROW (UP or DOWN) on the remote to select the Track to be deleted until it's highlighted (grey) and press CLEAR or select DELETE icon on the Program Edit Display and press ENTER (Selected Track will be deleted).

Insert Track

Inserting Tracks is possible only if a track is already programmed. This will change the order of playback.

1. Press PROGRAM on the remote to insert Track (Program Edit Display appears).

- If there are already programmed Tracks on the playlist, the above Display appears when you press PROGRAM.

2. To insert Chapter, move cursor to playlist and press ARROW (UP or DOWN) on the remote to select location where you want to insert a Track (will be inserted above the icon highlighted grey).

3. Now move cursor to TRACK icon and select track to be inserted as described with Program Edit above.

4. Select INSERT icon on the Program Edit Display.

5. Press ENTER (Track inserts).

Stop Program Play

To end Program Play and return to normal mode:

1. When you open and close tray (complete program will be deleted).

2. When you press STOP twice, this will end program play but keep the program in memory (recallable at once by pressing PROG on remote).

3. When you turn Power off and on (to Standby), this will end program play but keep the program in memory. If Power is turned off completely the program will be deleted.

Note :

When you don't add tracks onto Playlist and want to return to normal play mode press RETURN on the remote or select DONE icon and press ENTER on the remote.

Language Codes (for Audio Track and Subtitle Selection, see page 20-21)

Don't forget to press the ENTER on the remote after you enter the code.

Language	Code	Language	Code	Language	Code
Abkhazian	6566	Hungarian	7285	Russian	8285
Afar	6565	Icelandic	7383	Samoan	8377
Afrikaans	6570	Indonesian	7378	Sangho	8371
Albanian	8381	Interlingua	7365	Sanskrit	8365
Ameharic	6577	Interlingue	7369	Scots Gaelic	7168
Arabic	6582	Iunpiak	7375	Serbian	8382
Armenian	7289	Irish	7165	Servo-Groatian	8372
Assamese	6583	Italian	7384	Sesotho	8384
Aymara	6588	Japanese	7465	Setswana	8478
Azerbaijani	6590	Javanese	7487	Shona	8378
Bashkir	6665	Kannada	7578	Sindhi	8368
Basque	6985	Kashmiri	7583	Singhalese	8373
Bengali; Bangla	6678	Kazakh	7575	Siswati	8383
Bhutani	6890	Kinyarwanda	8287	Slovak	8375
Bihari	6672	Kirghiz	7589	Slovenian	8376
Bislama	6673	Kirundi	8278	Somali	8379
Breton	6682	Korean	7579	Spanish	6983
Bulgarian	6671	Kurdish	7585	Sundanese	8385
Burmese	7789	Laothian	7679	Swahili	8387
Byelorussian	6669	Latin	7665	Swedish	8386
Cambodian	7577	Latvian, Lettish	7686	Tagalog	8476
Catalan	6765	Lingala	7678	Tajik	8471
Chinese	9072	Lithuanian	7684	Tamil	8465
Corsican	6779	Macedonian	7775	Tatar	8484
Croatian	7282	Malagsy	7771	Telugu	8469
Czech	6783	Malay	7783	Thai	8472
Danish	6865	Malayalam	7776	Tibetan	6679
Dutch	7876	Maltese	7784	Tigrinya	8473
English	6978	Maori	7773	Tonga	8479
Esperanto	6979	Marathi	7782	Tsonga	8483
Estonian	6984	Moldavian	7779	Turkish	8482
Faroese	7079	Mongolian	7778	Turkmen	8475
Fiji	7074	Naru	7865	Twi	8487
Finnish	7073	Nepali	7869	Ukrainian	8575
French	7082	Norwegian	7879	Urdu	8582
Frisian	7089	Occitan	7967	Uzbek	8590
Galician	7176	Oriya	7982	Vietnamese	8673
Georgian	7565	Oromo (Afan)	7977	Volapuk	8679
German	6869	Panjabi	8065	Welsh	6789
Greek	6976	Pashto, Pushto	8083	Wolof	8779
Greenlandic	7576	Persian	7065	Xhosa	8872
Guarani	7178	Polish	8076	Yiddish	7473
Gujarati	7185	Portuguese	8084	Yoruba	8979
Hausa	7265	Quechua	8185	Zulu	9085
Hebrew	7387	Rhaero-Romance	8277		
Hindi	7273	Romanian	8279		

BLOCK DIAGRA

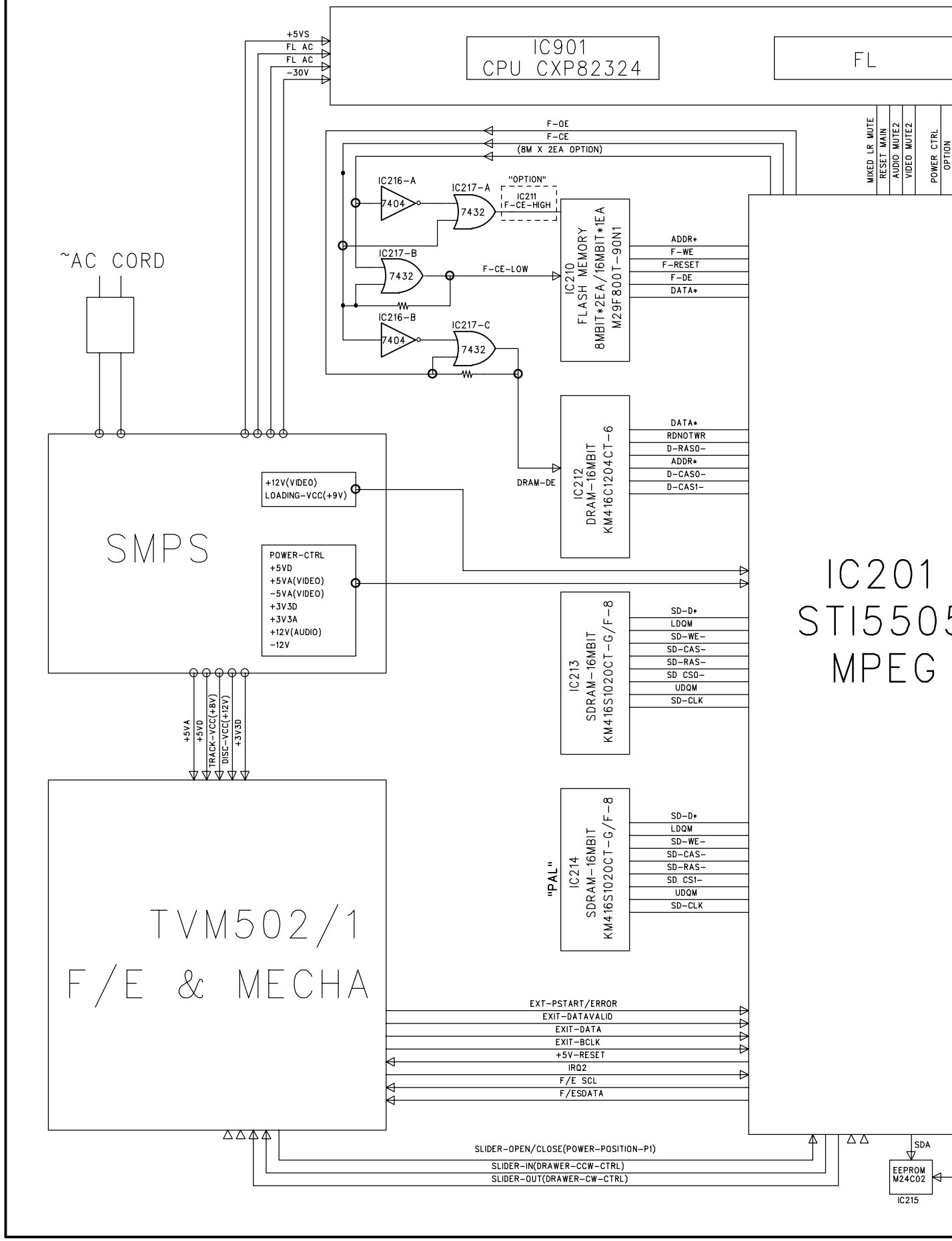

NO	DATE	POS.	CONTENTS	NO	DATE	POS.	CONTENTS

LEFT CHANNEL
(SAME AS RIGHT CANNEL)

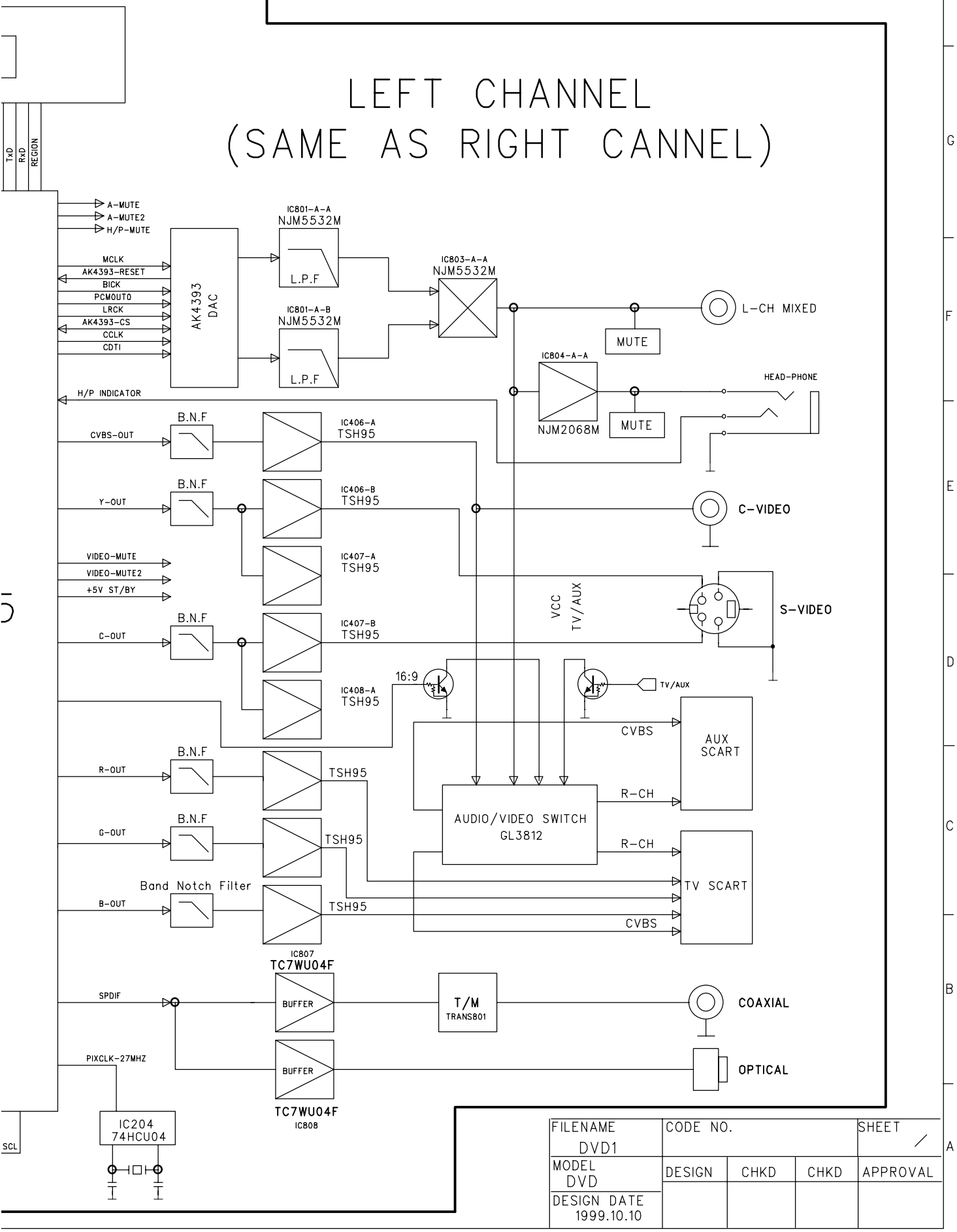

FILENAME	CODE NO.			SHEET
DVD1				
MODEL DVD	DESIGN	CHKD	CHKD	APPROVAL
DESIGN DATE 1999.10.10				

TTC LTD.

SCHEMATIC DIAGRAM

NO	DATE	POS.	CONTENTS	NO	DATE	POS.	CONTENTS

IC201

IC-STI5505 **AVB**

(Test Jig)

< TEST B'D >

(OPTION)

TTC KOREA

FILENAME MPEG	PART NO. MAIN		SHEET 1/5
MODEL	DESIGN	CHKD	APPROVAL
DESIGN DATE 4/JAN/2000			
TTC CO.LTD			

SCHEMATIC DIAGRAM

NO	DATE	POS.	CONTENTS	NO	DATE	POS.	CONTENTS

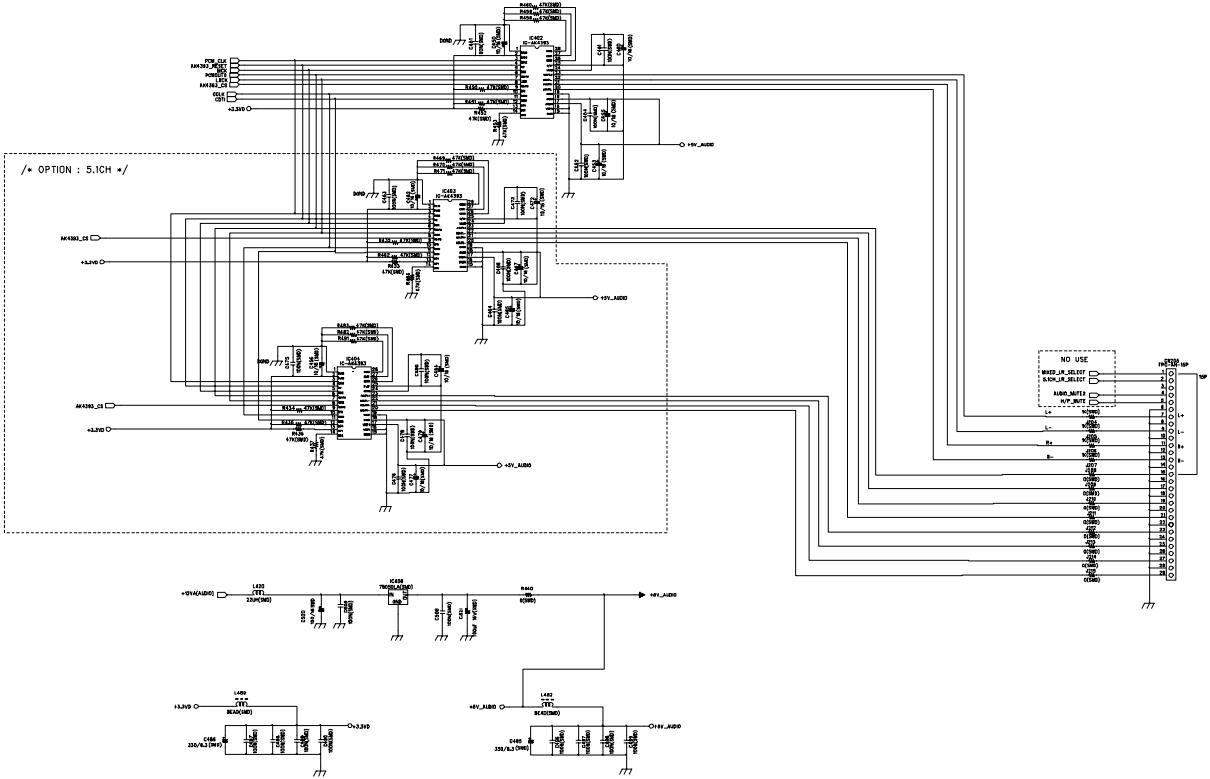

FILENAME AUDIO_DAC	PART NO.		SHEET 4/5
MODEL	DESIGN	CHKD	APPROVAL
DESIGN DATE 15/JAN/2000			

TTC CO.LTD

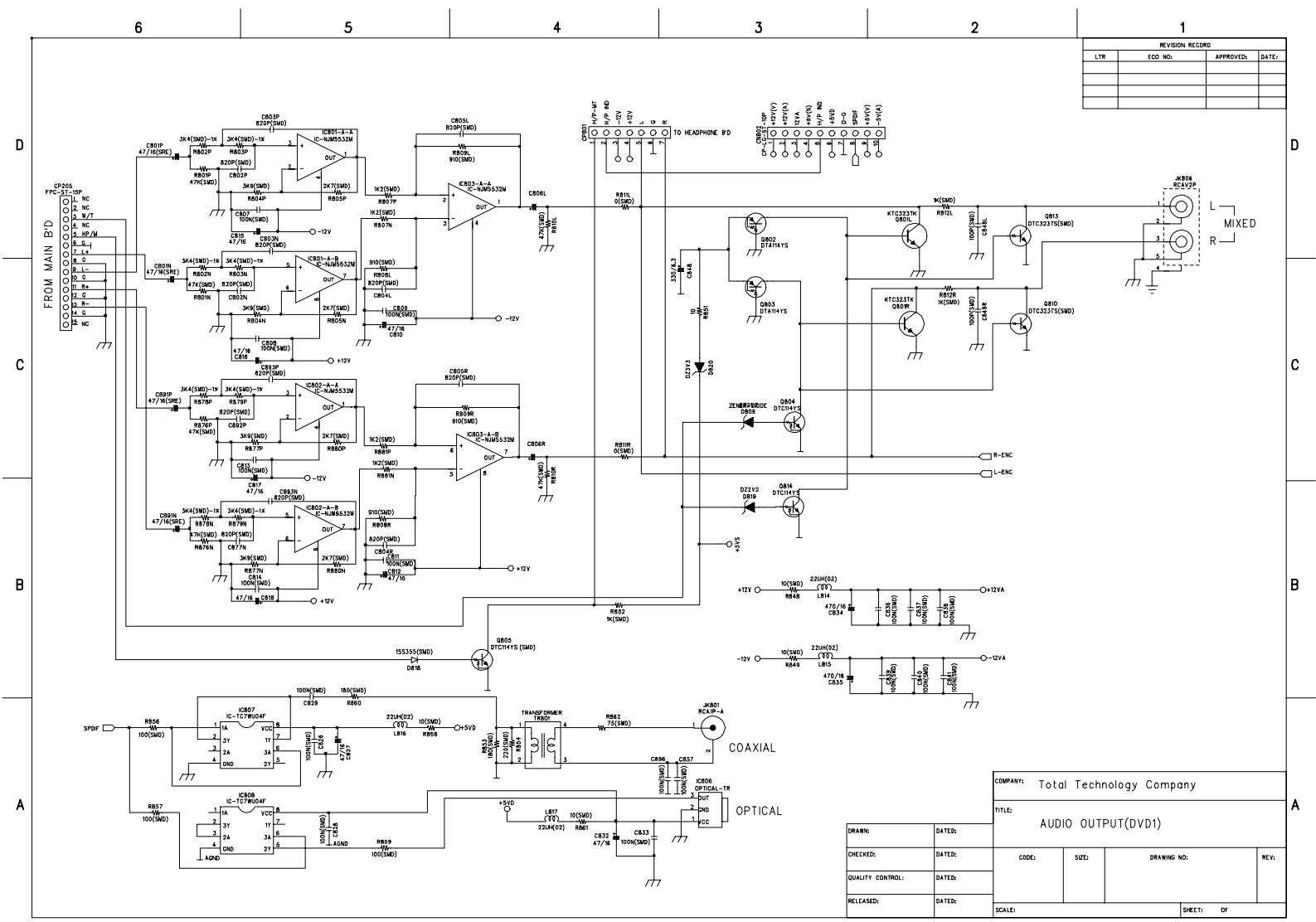
REVISION RECORD
LTR
ECO NO:
APPROVED:
DATE:
FROM MAIN B'D
CP205
FPC-ST-15P
TO HEADPHONE B'D
CP801
CN802
JK806
RCAV2P
MIXED
L
R
R-ENC
L-ENC
+5VS
+12V
-12V
+12VA
-12VA
+5VD
SPDIF
COAXIAL
OPTICAL
TRANSFORMER
TR801
JK801
RCAIP-A
IC807
IC-TC7WU04F
IC808
IC-TC7WU04F
IC806
OPTICAL-TR
IC801-A-A
IC-NJM5532M
IC801-A-B
IC-NJM5532M
IC802-A-A
IC-NJM5532M
IC802-A-B
IC-NJM5532M
IC803-A-A
IC-NJM5532M
IC803-A-B
IC-NJM5532M
Q802
DTA114YS
Q803
DTA114YS
Q804
DTC114YS
Q814
DTC114YS
Q805
DTC114YS (SMD)
Q813
DTC323TS(SMD)
Q810
DTC323TS(SMD)
KTC323TK
Q801L
KTC323TK
Q801R
ZENER-DIODE
D809
D22V2
D819
DZ3V3
D820
1SS355(SMD)
D818
COMPANY:
Total Technology Company
TITLE:
AUDIO OUTPUT(DVD1)
DRAWN:
DATED:
CHECKED:
DATED:
QUALITY CONTROL:
DATED:
RELEASED:
DATED:
CODE:
SIZE:
DRAWING NO:
REV:
SCALE:
SHEET:
OF

REVISION RECORD			
LTR	ECO NO:	APPROVED:	DATE:

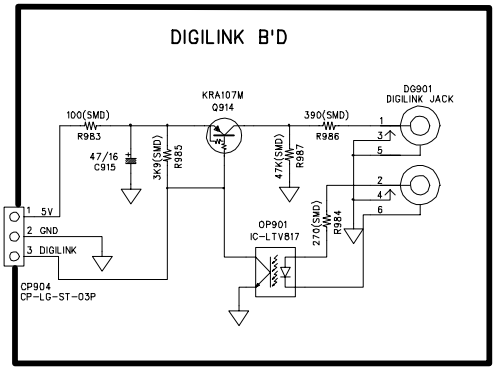

COMPANY:					
TITLE:					
DRAWN:	DATED:				
CHECKED:	DATED:	CODE:	SIZE:	DRAWING NO:	REV:
QUALITY CONTROL:	DATED:				
RELEASED:	DATED:	SCALE:		SHEET: OF	

SCHEMATIC DIAGRAM

NO	DATE	POS.	CONTENTS	NO	DATE	POS.	CONTENTS

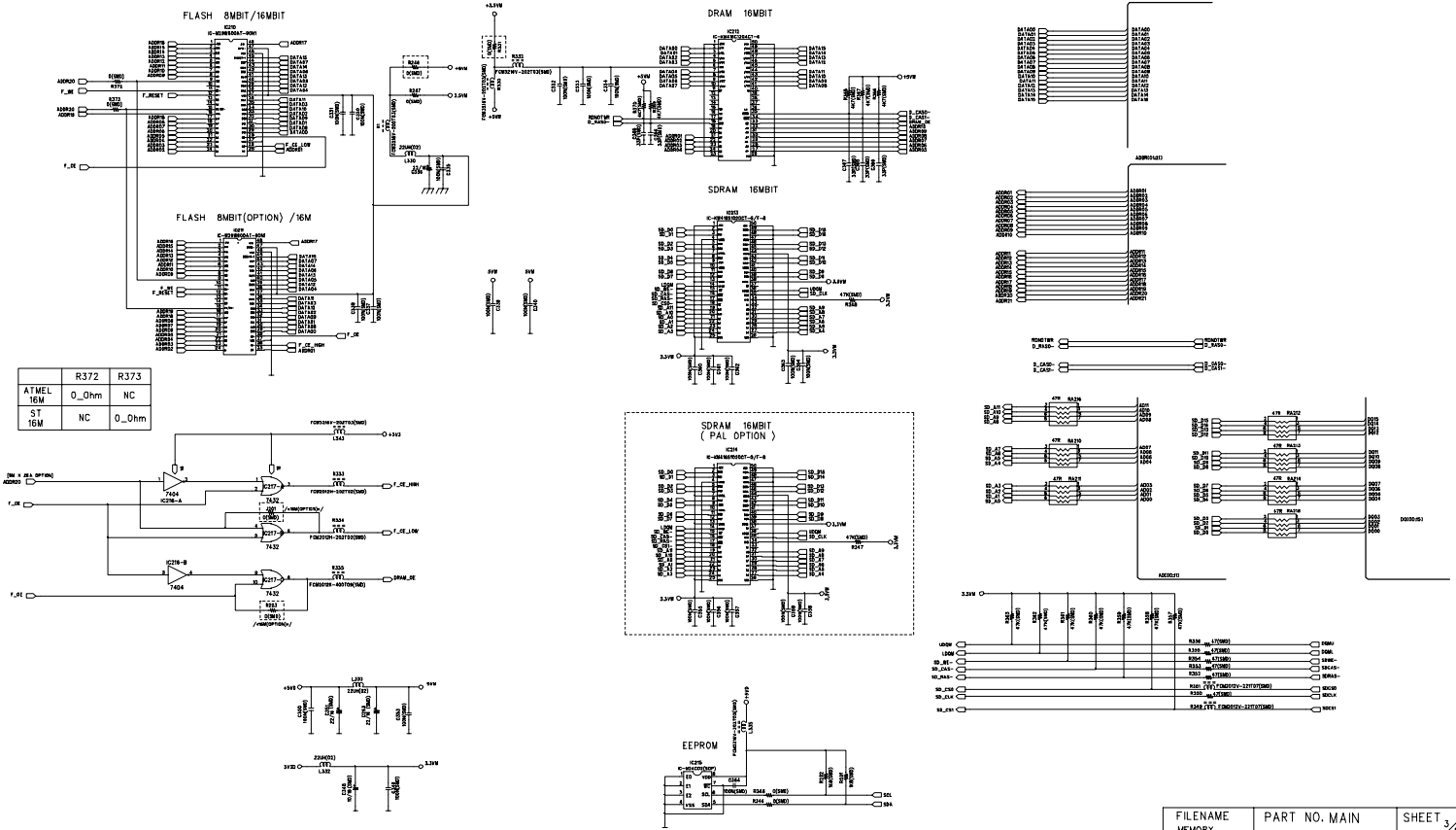

	R372	R373
ATMEL 16M	0_Ohm	NC
ST 16M	NC	0_Ohm

FILENAME	PART NO. MAIN		SHEET
MEMORY			3/5
MODEL	DESIGN	CHKD	APPROVAL
DESIGN DATE 4/JAN/2000			

TTC CO.LTD

NO	DATE	POS.	CONTENTS	NO	DATE	POS.	CONTENTS

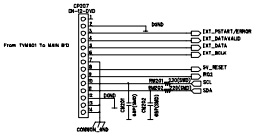

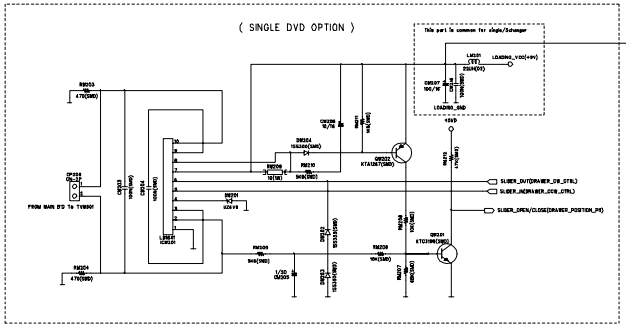

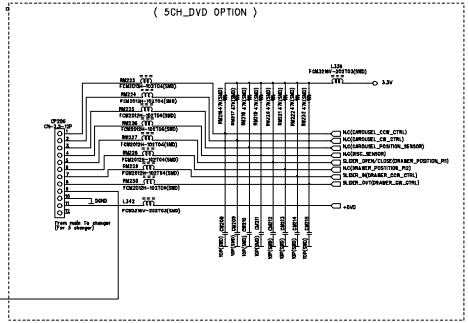

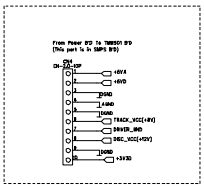

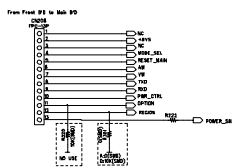

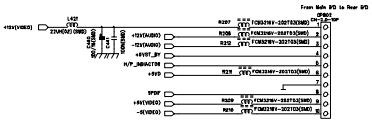

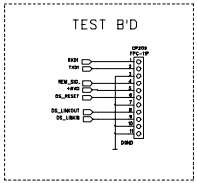

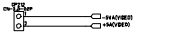

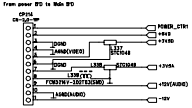

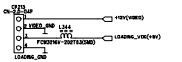

FILENAME	PART NO.MAIN		SHEET
misca.sch			2/5
MODEL	DESIGN	CHKD	APPROVAL
DESIGN DATE 15/JAN/2000			

TTC CO.LTD

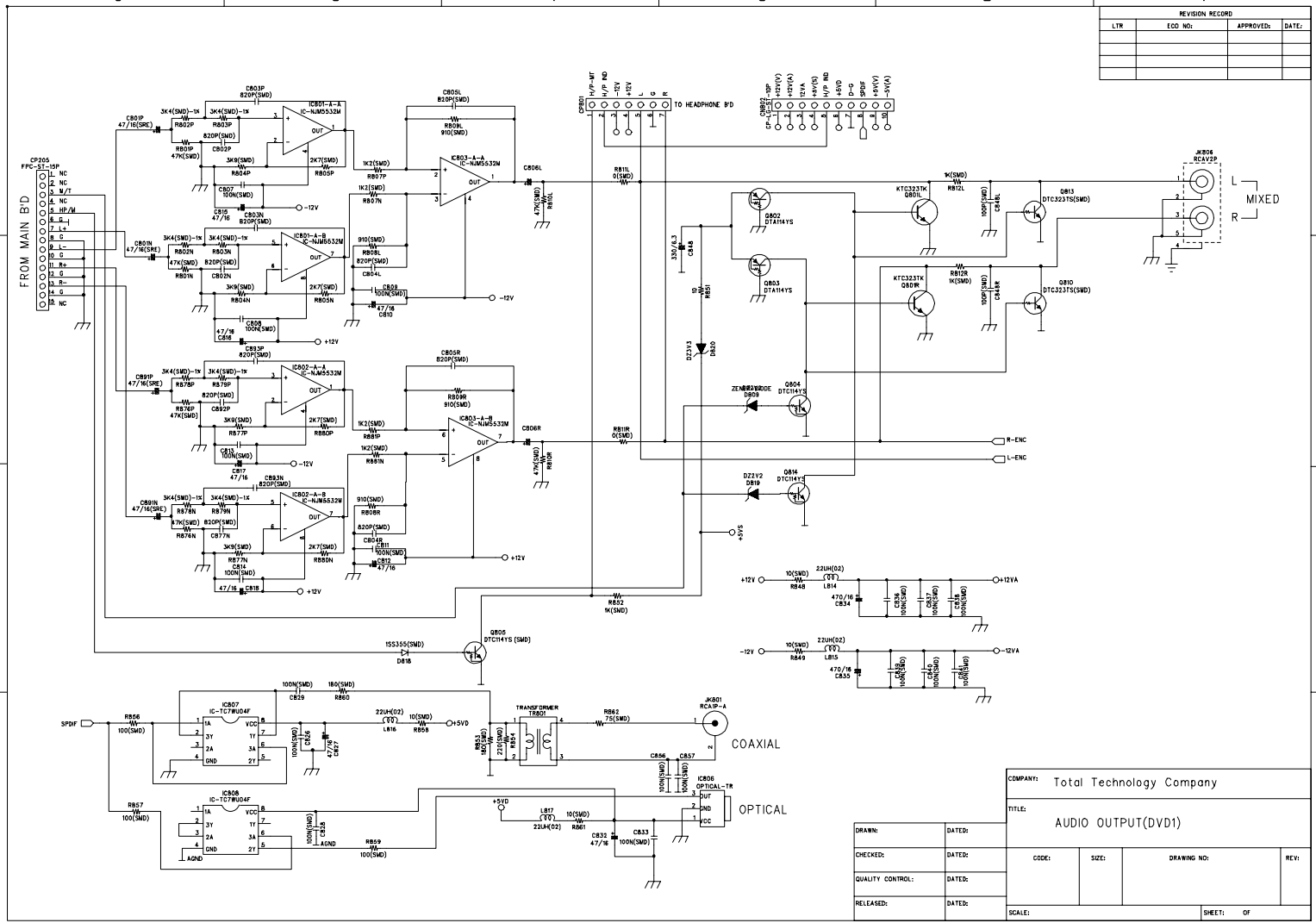

REVISION RECORD
LTR
ECO NO:
APPROVED:
DATE:
FROM MAIN B'D
CP205
FPC-ST-15P
TO HEADPHONE B'D
CP801
CP802
JK806
RCAV2P
MIXED
L
R
R-ENC
L-ENC
+5VS
+12V
-12V
+12VA
-12VA
SPDIF
IC807
IC-TC7WU04F
IC808
IC-TC7WU04F
TRANSFORMER
TR801
JK801
RCA1P-A
COAXIAL
IC806
OPTICAL-TR
OPTICAL
COMPANY: Total Technology Company
TITLE: AUDIO OUTPUT(DVD1)
DRAWN:
DATED:
CHECKED:
DATED:
QUALITY CONTROL:
DATED:
RELEASED:
DATED:
CODE:
SIZE:
DRAWING NO:
REV:
SCALE:
SHEET: OF

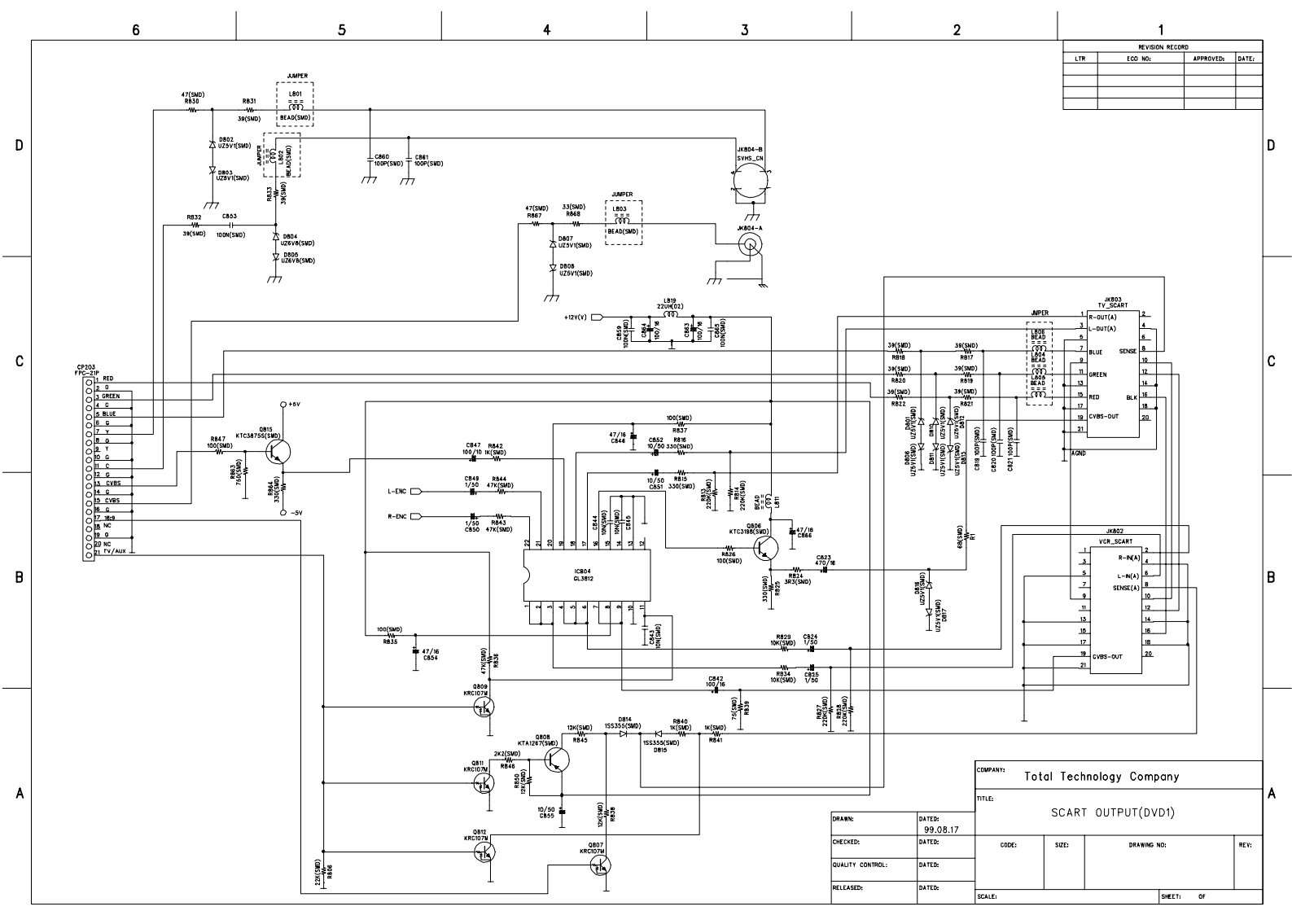

REVISION RECORD
LTR
ECO NO:
APPROVED:
DATE:
JUMPER
L801
BEAD(SMD)
47(SMD)
R830
R831
39(SMD)
D802
UZ5V1(SMD)
D803
UZ5V1(SMD)
L802
BEAD(SMD)
R833
39(SMD)
C860
100P(SMD)
C861
100P(SMD)
JK804-B
SVHS_CN
R832
39(SMD)
C853
100N(SMD)
D804
UZ6V8(SMD)
D805
UZ6V8(SMD)
JUMPER
L803
BEAD(SMD)
47(SMD)
R867
33(SMD)
R868
D807
UZ5V1(SMD)
D808
UZ5V1(SMD)
JK804-A
L819
22UH(02)
+12V(V)
C859
100N(SMD)
C864
100/16
C863
100/16
C865
100N(SMD)
CP203
FPC-21P
1 RED
2 G
3 GREEN
4 C
5 BLUE
6 G
7 Y
8 G
9 Y
10 C
11 C
12 G
13 CVBS
14 C
15 CVBS
16 G
17 16:9
18 NC
19 G
20 NC
21 TV/AUX
+5V
-5V
Q815
KTC3875S(SMD)
R847
100(SMD)
R863
75(SMD)
R864
330(SMD)
C847
100/10
R842
1K(SMD)
C849
1/50
R844
47K(SMD)
L-ENC
R-ENC
1/50
C850
R843
47K(SMD)
IC804
GL3812
C844
10N(SMD)
C845
10N(SMD)
C846
100(SMD)
R837
C852
10/50
R816
330(SMD)
10/50
C851
R815
330(SMD)
R813
220K(SMD)
R814
220K(SMD)
BEAD
L811
Q806
KTC3198(SMD)
47/16
C866
R826
100(SMD)
C823
470/16
R824
3R3(SMD)
330(SMD)
R825
100(SMD)
R835
47/16
C854
47K(SMD)
R836
Q809
KRC107M
C843
10N(SMD)
R829
10K(SMD)
C824
1/50
R834
10K(SMD)
C825
1/50
C842
100/16
75(SMD)
R839
R827
220K(SMD)
R828
220K(SMD)
Q808
KTA1267(SMD)
12K(SMD)
R845
D814
1SS355(SMD)
1SS355(SMD)
D815
R840
1K(SMD)
1K(SMD)
R841
Q811
KRC107M
2K2(SMD)
R846
R850
12K(SMD)
10/50
C855
12K(SMD)
R838
Q812
KRC107M
Q807
KRC107M
22K(SMD)
R806
JK803
TV_SCART
R-OUT(A)
L-OUT(A)
BLUE
SENSE
GREEN
RED
BLK
CVBS-OUT
AGND
JUMPER
L806
BEAD
L804
BEAD
L805
BEAD
39(SMD)
R818
39(SMD)
R817
39(SMD)
R820
39(SMD)
R819
39(SMD)
R822
39(SMD)
R821
D801
UZ5V1(SMD)
D806
UZ5V1(SMD)
D811
UZ5V1(SMD)
D812
UZ5V1(SMD)
D813
UZ5V1(SMD)
C819
100P(SMD)
C820
100P(SMD)
C821
100P(SMD)
68(SMD)
R1
D816
UZ5V1(SMD)
D817
UZ5V1(SMD)
JK802
VCR_SCART
R-IN(A)
L-IN(A)
SENSE(A)
CVBS-OUT
COMPANY:
Total Technology Company
TITLE:
SCART OUTPUT(DVD1)
DRAWN:
DATED:
99.08.17
CHECKED:
DATED:
QUALITY CONTROL:
DATED:
RELEASED:
DATED:
CODE:
SIZE:
DRAWING NO:
REV:
SCALE:
SHEET:
OF

SCHEMATIC DIAGRAM

NO	DATE	POS.	CONTENTS	NO	DATE	POS.	CONTENTS

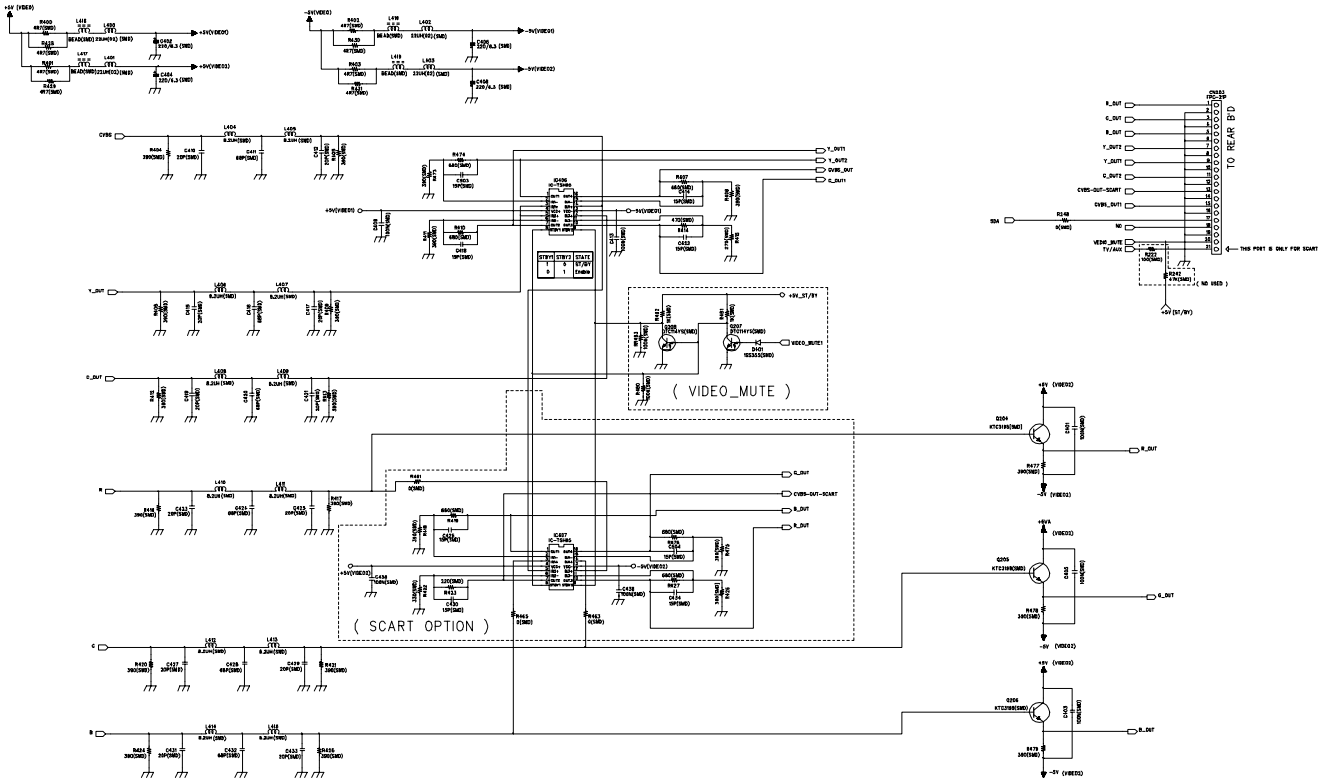

FILENAME	PART NO. MAIN		SHEET
VIDEO_OUTPUT			5/5
MODEL	DESIGN	CHKD	APPROVAL
DESIGN DATE 26/JAN/2000			

TTC CO.LTD REV01

POWER SUPPLY SCHEMATIC DVD1
P/N : J4090000020X

new D05, P/N: 364-666

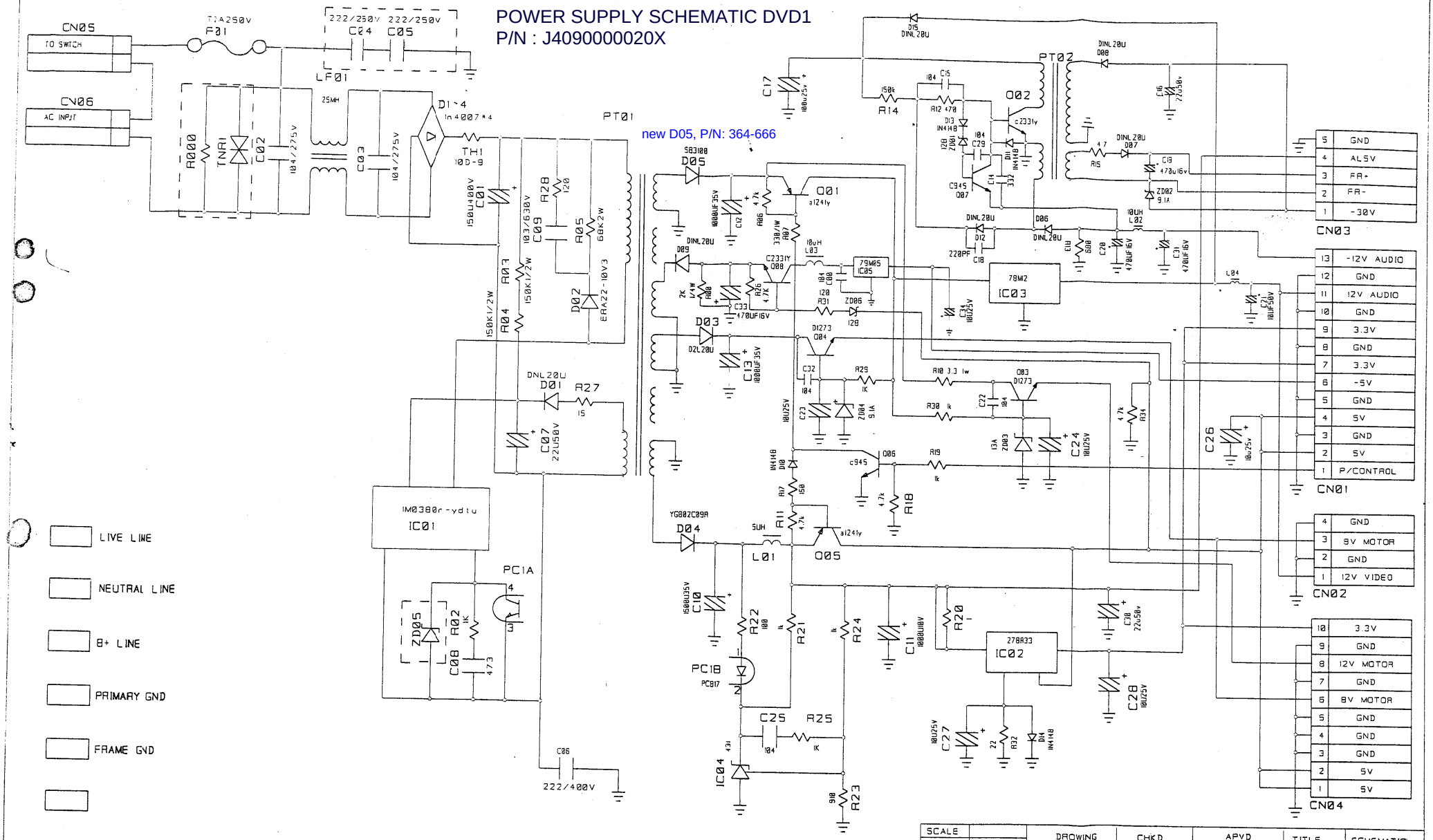

SCALE		DROWING	CHKD	APVD	TITLE	SCHEMATIC
UNIT						
DATE	99.08.10	PARK S.K			MODEL NO	DVD
DONGYANG INSTRUMENT IND.CO.,LTD.					REV NO	2
					DWG NO	

POWER SUPPLY SPECIFICATIONS

26. CONNECTOR

CN05 : POWER SWITCH

CN06 : AC INPUT OF POWER CORD

NO	NAME CN01
1	POWER CONTROL ACTIVE "H"
2	+5V DIGITAL
3	GND
4	+5V ANALOG
5	GND
6	-5V VIDEO
7	+3.3V DIGITAL
8	GND
9	+3.3V ANALOG
10	GND
11	+12V AUDIO
12	GND
13	-12V AUDIO

NO	NAME CN04
1	+5V ANALOG
2	+5V DIGITAL
3	GND
4	GND
5	GND
6	+8V TRACK MOTOR
7	GND
8	+12V SPINDLE MOTOR
9	GND
10	+3.3V DIGITAL

NO	NAME CN02
1	+12V VIDEO
2	GND
3	+8V LOADING MOTOR
4	GND

NO	NAME CN03
1	-30V FL
2	FL GND
3	FL (3.9V)
4	+5V STAND-BY
5	GND

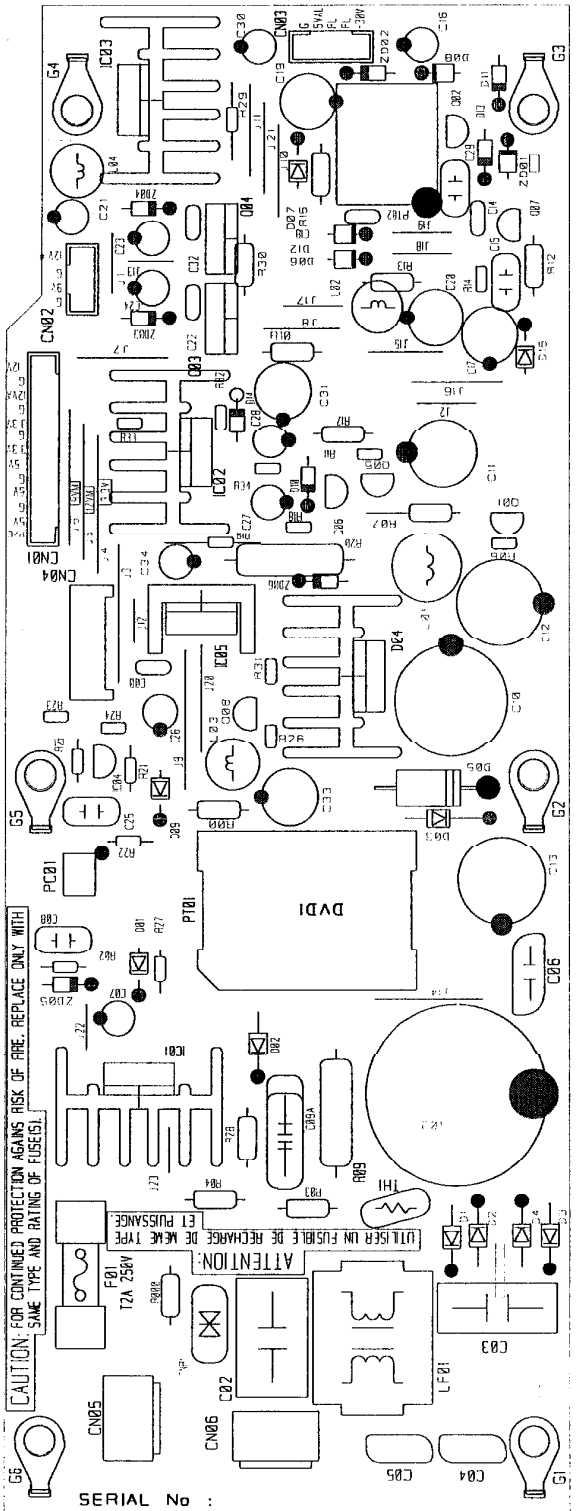
CAUTION: FOR CONTINUED PROTECTION AGAINS RISK OF FIRE. REPLACE ONLY WITH SAME TYPE AND RATING OF FUSE(S).
ATTENTION:
UTILISER UN FUSIBLE DE RECHARGE DE MEME TYPE ET PUISSANCE
F01 T2A 250V
DV01
PT01
PC01
CN01
CN02
CN03
CN04
CN05
CN06
IC01
IC02
IC03
IC05
TH1
LF01
G1
G2
G3
G4
G5
G6
SERIAL No :
DONGYANG INSTRUMENT CO.,LTD

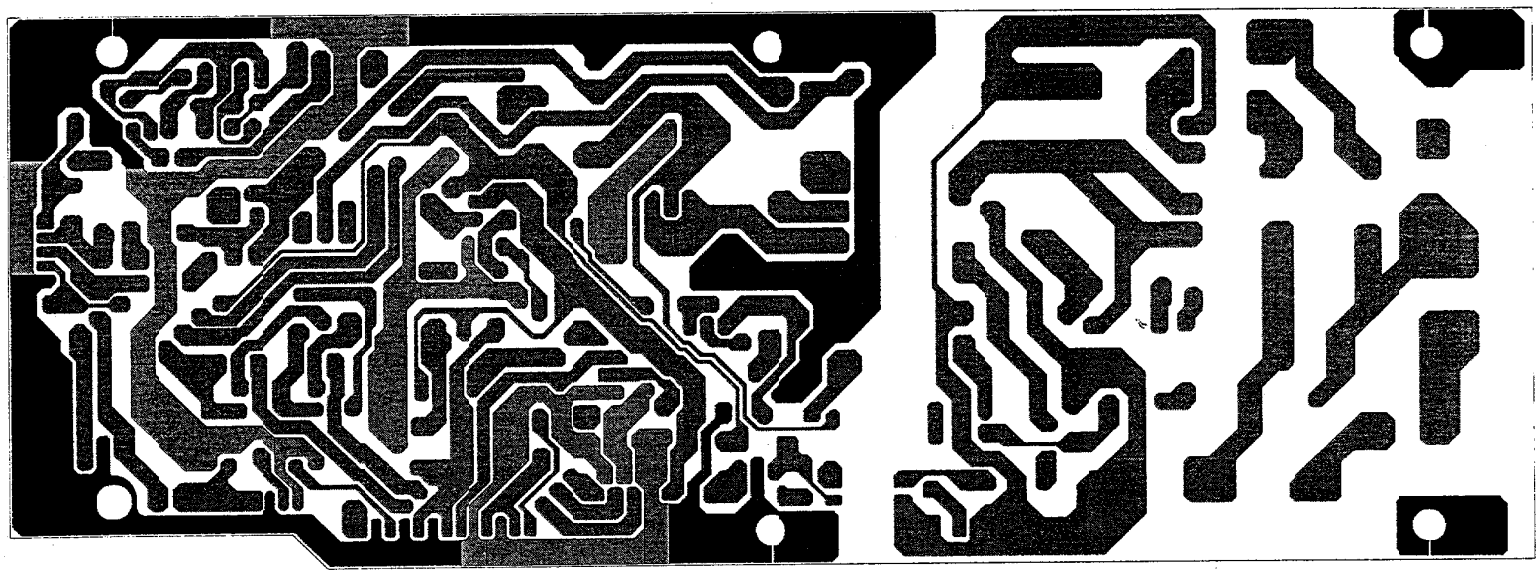

IC01 POWER SWITCH TECHNICAL SPECIFICATIONS

KA1M0380R — SAMSUNG POWER SWITCH

FEATURES

- Precision fixed operating frequency (70KHz)
- Pulse by pulse over current limiting
- Over Current Protection
- Over Voltage Protection(min. 23V)
- Internal thermal shutdown function
- Under voltage lockout
- Internal high voltage sense FET
- Auto restart

TO-220F

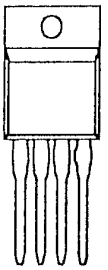

1.GND 2.DRAIN 3.Vcc 4.FB

PRODUCT SUMMARY

Part Number	BVdss	Rds(on)	ID
KA1M0380R	800V	5.0Ω	3A

BLOCK DIAGRAM

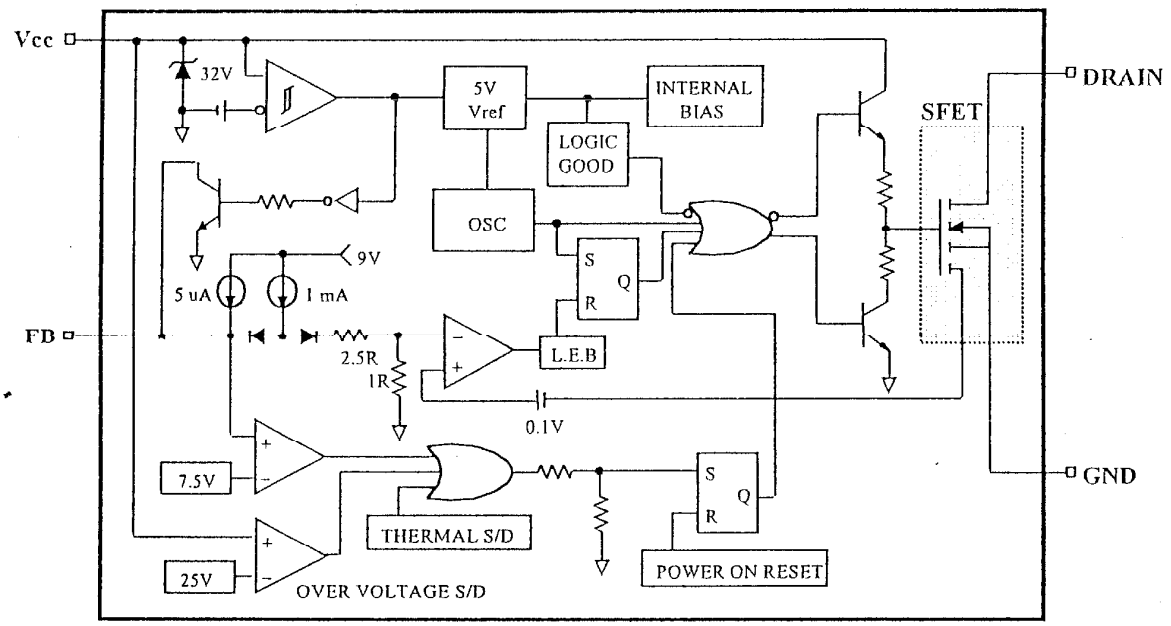

DVD1 PART - LIST

DVD.1

ACMO PL - TCE AUDIO HONG KONG PTE LTD

PL DWG NO.: 4KJS1DVD
PL TITLE : 1DVD MECH PL
ISSUE DATE: 11-13-99
ISSUED BY : CHICK PETER
* = CRITICAL ITEM

PAGE: 1
REV NO: 18
REVISE DATE: 11-22-00
PRINT DATE: 03-28-01
< GROUP NO. / QUANTITY >

E	ITEM	DRAWING NO.	PART NAME/TEXT	UM	QTYFAC	MB	TMING	PL REV	CH EA
	#001	4KJS1DVDCHEA	DVD1.0 EU HARMAN	PC			F4699	05	A
E	'020	JP99001601EA	DVD1.0 PKG PL	PC	1.00000	M	F1700	08	1
E	'021	JE99013101EA	DVD1.0 MNBD ASM	PC	1.00000	M	F4699	08	1
E	'021	JE99013103EA	DVD1 MNBD ASM S'PO	PC	1.00000	M	F1700	08	
E	'021	JE99013104EA	DVD1 MNBD ASM NEW	PC	1.00000	M	F1700	08	
E	'022	JE99013501EA	DVD1.0 FRBD ASM	PC	1.00000	M	F4699	02	1
E	'023	JE99013901EA	DVD1.0 OUTBD ASM	PC	1.00000	M	F1200	05	1
12	0050	J85000010000	PANEL FRONT	PC	1.00000	M	F5099	02	1
12	0060	J85200062000	BUTTON DIMMER	PC	1.00000	M	F5099	02	1
12	0070	J85200063000	BUTTON SKIP	PC	1.00000	M	F5099	02	1
12	0080	J85200063100	BUTTON OPEN/CLOSE	PC	1.00000	M	F5099	02	1
12	0090	J85400025000	CAP BUTTON	PC	1.00000	M	F5099	02	1
12	0100	J85100011000	KNOB LEVEL	PC	1.00000	M	F5099	02	1
12	0110	J85200049000	BUTTON POWER HIPS	PC	1.00000	M	F5099	02	1
12	0120	J85200052000	BUTTON STANDBY	PC	1.00000	M	F5099	02	1
12	0130	J85400019000	INDICATOR STANDBY	PC	1.00000	M	F5099	02	1
	0140	J85940005000	DIFFUSER #1	PC	1.00000	B	F4699	02	1
	0150	J85940006000	DIFFUSER#2	PC	1.00000	B	F5099	02	1
	0160	J85500005000	FILTER FL	PC	1.00000	B	F4699	02	1
	0170	J85300014000	WINDOW DISPLAY	PC	1.00000	B	F4699	02	1
	0180	J60550003000	BADGE HARMAN/KARDO	PC	1.00000	B	F4699	02	1
	0200	J60300019000	BKT PCB	PC	1.00000	B	F4699		2
	0210	10663610XX	OK TVM 502/1 B	PC	1.00000	B	F5099	01	1
12	0220	J85600008000	DOOR TRAY	PC	1.00000	M	F5099	02	1
12	0230	J85900501000	FOOT-ASS'Y	PC	1.00000	M	F5099	02	4
	0231	J85900503000	FOOT-RUBBER	PC	1.00000	B	F3900	15	4
	0240	J4090000020X	POWER MODULE	PC	1.00000	B	F4699		1
	0250	J85820001000	SPACER PCB	PC	1.00000	B	F4699		6
	0260	J60110003000	PANEL REAR	PC	1.00000	B	F5099	02	1
	0270	J43731100000	CORD POWER EU 2.5A	PC	1.00000	B	F1700	08	1
	0280	J65100000100	BUSHING-AC CORD	PC	1.00000	B	F4699		1
	0290	J60100003000	COVER TOP	PC	1.00000	B	F4699	02	1
	0300	J5636140150X	SCREW	PC	1.00000	B	F2600	09	4
	0310	J80600031810	SCREW TAP 3.0*18 Y	PC	1.00000	B	F1200	04	6
	0320	J5636140010X	SCREW	PC	1.00000	B	F1200	04	42
	0370	J60020003000	CHASSIS FRONT	PC	1.00000	B	F0900	03	1
	0380	J60600010000	SHIELD MPEG PCB	PC	1.00000	B	F1400	06	1
	0390	J5636140010X	SCREW	PC	1.00000	B	F0900	03	4
	0400	J94100006000	SHIELD FORM	PC	1.00000	B	F0900	03	2
	0410	J2632400016X	FERRITE CORE 12 BO	PC	1.00000	B	F0900	03	1
	0420	J2632100016X	EMI CORE RING34 34	PC	1.00000	B	F1400	06	1
	0450	J6171140010X	WIRE TIE NYLON6	PC	1.00000	B	F1400	06	8
	0460	J48000000100	SHEET INSULATION	PC	1.00000	B	F0900	03	1
	0470	J5636130080X	SCREW	PC	1.00000	B	F4800	18	7
	0480	J9917003010X	CLAMP WIRE UL	PC	1.00000	B	F2800	11	2
	0500	J5441000110X	CUSHION FOOTRUBBER	PC	1.00000	B	F4500	17	4
	0570	20372500XX	WASHER 3.0MM 7.9MM	PC	1.00000	B	F2800	11	1
	0580	247A34972025	TUBING SHRINKABLE	PC	1.00000	B	F3800	15	4

PL DWG NO.: 4KJS1DVDL12
PL TITLE : 1DVD MECH PL

PAGE: 1
REV NO: 10

ISSUE DATE: 03-02-00
ISSUED BY : CHICK PETER
* = CRITICAL ITEM

REVISE DATE: 02-23-01
PRINT DATE: 03-28-01
< GROUP NO. / QUANTITY >

E	ITEM	DRAWING NO.	PART NAME/TEXT	UM	QTYFAC	MB	TMING	PL REV	QT Y
	0050	J85000006000	PANEL FRONT	PC	.		F0900		
	00501	J8500000R000	PANEL FRONT RAW	PC	1.00000	B	F3100	04	1
	00503	DVD211000INK	INK137C	KG	.00010	B	F1300	01	1
	00504	20382740XX	INK SILKSCREEN BLA	KG	.00010	B	F1300	01	1
	00505	20353660XX	INK SILKSCREEN WHI	KG	.00010	B	F1300	01	1
	00506	20289980XX	DILUTION IPI-783 3	LI	.02400	B	F1300	01	1
	00507	20865460XX	DILUTION THINNER G	LI	.02400	B	F1300	01	1
	00508	R85000006000	A/W DWG NO	PC			F2800	02	X
	00501	J8500000R000	PANEL FRONT RAW	PC	1.00000	B	F4200	08	1
	00503	DVD211000INK	INK137C	KG	.00010	B	F4200	08	1
	00504	20865460XX	DILUTION THINNER G	LI	.01800	B	F3500	05	1
	00505	20289980XX	DILUTION IPI-783 3	LI	.00020	B	F3500	05	1
	00506	R85000006002	A/W DWG NO	PC			F3500	05	X
	00507	20382740XX	INK SILKSCREEN BLA	KG	.00010	B	F4200	08	1
	00508	20353660XX	INK SILKSCREEN WHI	KG	.00010	B	F4200	08	1
	00502	D01865XXXXXX	PAINT BLACK	LI	.01200	B	F0900		1
	00503	6600287XXXXX	INK SILK GOLD	KG	.00010	B	F0900		1
	00504	20865460XX	DILUTION THINNER G	LI	.01800	B	F0900		1
	00505	20289980XX	DILUTION IPI-783 3	LI	.00020	B	F2800	02	1
	00506	R85000010000	A/W DWG NO	PC			F2800	02	X
	03301	J8510000R000	KNOB ROTARY RAW	PC	1.00000	B	F3100	04	1
	03302	D01865XXXXXX	PAINT BLACK	LI	.00050	B	F1300	01	1
	03303	20865460XX	DILUTION THINNER G	LI	.00100	B	F2800	02	1
13	01001	J8510001100M	RAW KNOB LEVEL	PC	1.00000	M	F0900		1
	01002	D01865XXXXXX	PAINT BLACK	LI	.00050	B	F0900		1
	01003	20865460XX	DILUTION THINNER G	LI	.00090	B	F0900		1
	03401	J8520004500M	BTN 8KEY RAW	PC	1.00000	B	F3100	04	1
	03402	D01865XXXXXX	PAINT BLACK	LI	.00050	B	F1300	01	1
	03403	20668710XX	INK SILKSCREEN GRE	KG	.00010	B	F2900	03	1
	03404	20289980XX	DILUTION IPI-783 3	LI	.00100	B	F1300	01	1
	03405	20865460XX	DILUTION THINNER G	LI	.00100	B	F1300	01	1
	03406	R85000006000	A/W DWG NO	PC			F2800	02	X
	01201	J8520004600M	BTN STANDBY RAW	PC	1.00000	B	F3100	04	1
	01202	D01865XXXXXX	PAINT BLACK	LI	.00050	B	F1300	01	1
	01203	20865460XX	DILUTION THINNER G	LI	.00100	B	F2800	02	1
	03501	J8520004700M	BTN 3KEY A RAW	PC	1.00000	B	F3100	04	1
	03502	D01865XXXXXX	PAINT BLACK	LI	.00050	B	F1300	01	1
	03503	20865460XX	DILUTION THINNER G	LI	.00100	B	F2800	02	1
	03601	J8520004R100	BTN 3KEY B RAW	PC	1.00000	B	F3100	04	1
	03602	D01865XXXXXX	PAINT BLACK	LI	.00050	B	F1300	01	1
	03603	20865460XX	DILUTION THINNER G	LI	.00100	B	F2800	02	1
	01102	D01865XXXXXX	PAINT BLACK	LI	.00050	B	F1300	01	1
	01103	20865460XX	DILUTION THINNER G	LI	.00100	B	F2800	02	1
13	01101	J8520004900M	RAW BUTTON POWER H	PC	1.00000	M	F0900		1
	01102	D01865XXXXXX	PAINT BLACK	LI	.00050	B	F0900		1
	01103	6600289XXXXX	INK SILK RED	KG	.00002	B	F0900		1
	01104	20865460XX	DILUTION THINNER G	LI	.00090	B	F0900		1
	01105	20289980XX	DILUTION IPI-783 3	LI	.00004	B	F2800	02	1
	01106	R85000010000	A/W DWG NO	PC			F2800	02	X
13	01201	J8520005200M	RAW BUTTON STANDBY	PC	1.00000	M	F0900		1
	01202	D01865XXXXXX	PAINT BLACK	LI	.00050	B	F0900		1
	01203	20865460XX	DILUTION THINNER G	LI	.00090	B	F0900		1
	0060	J85200062000	BUTTON DIMMER	PC			F0900		
13	00601	J8520006R000	BTN DIMMER RAW	PC	1.00000	M	F0900		1
	00602	AVR7000FP105	PAINT CHAMPAGNE LI	KG	.00050	B	F0900		1
	00603	20865460XX	DILUTION THINNER G	LI	.00090	B	F0900		1
13	00701	J8520006300M	BTN SKIP RAW	PC	1.00000	M	F0900		1

	00702	D01865XXXXXX	PAINT BLACK	LI	.00050	B	F1300	01	1
	00703	20865460XX	DILUTION THINNER G	LI	.00090	B	F0900		1
13	00801	J8520006R100	BTN O/C RAW	PC	1.00000	M	F0900		1
	00802	AVR7000FP105	PAINT CHAMPAGNE LI	KG	.00050	B	F0900		1
	00803	20865460XX	DILUTION THINNER G	LI	.00090	B	F0900		1
	01701	55008430XX	GRANULES SAN TYRIL	KG	.01400	B	F0900		1
	01301	55006550XX	GRANULES SAN SAN T	KG	.00300	B	F0900		1
	01301	55006550XX	GRANULES SAN SAN T	KG	.00190	B	F0900		1
	00901	20290570XX	GRANULES PS ATOCHE	KG	.01300	B	F0900		1
	02201	J8560000000M	DOOR DVD RAW	PC	1.00000	B	F3100	04	1
	02202	20668710XX	INK SILKSCREEN GRE	KG	.00020	B	F1300	01	1
	02203	20865460XX	DILUTION THINNER G	LI	.00100	B	F1300	01	1
	02204	D01865XXXXXX	PAINT BLACK	LI	.00200	B	F2800	02	1
	02205	20289980XX	DILUTION IPI-783 3	LI	.00400	B	F2800	02	1
13	02201	J8560000R000	DOOR TRAY RAW	PC	1.00000	M	F0900		1
	02202	AVR7000FP105	PAINT CHAMPAGNE LI	KG	.00200	B	F0900		1
	02203	20865460XX	DILUTION THINNER G	LI	.00090	B	F0900		1
	04301	20290570XX	GRANULES PS ATOCHE	KG	.00900	B	F0900		1
13	02301	J5283003020M	FOOT-MOLD RAW	PC	1.00000	M	F0900		1
	02302	AP82447619AL	STAMPING FOIL	SM	.00760	B	F0801	10	1

PL DWG NO.: 4KJS1DVDL13
PL TITLE : 1DVD MECH PL
ISSUE DATE: 03-02-00
ISSUED BY : CHICK PETER
* = CRITICAL ITEM

PAGE: 1
REV NO: 01
REVISE DATE: 11-30-00
PRINT DATE: 03-28-01
< GROUP NO. / QUANTITY >

E	ITEM	DRAWING NO.	PART NAME/TEXT	UM	QTYFAC	MB	TMING	PL REV	OT Y
	02301	55015960XX	GRANULES ABS TORAY	KG	.01400	B	F0900		1
	00501	55019770XX	GRANULES PIGMENT -	KG	.19300	B	F0900		1
	00501	JDVD5ATO011K	ATO 011 BLACK	KG	.21900	B	F5200	01	1
	03301	20290570XX	GRANULES PS ATOCHE	KG	.00500	B	F0900		1
	01001	20290570XX	GRANULES PS ATOCHE	KG	.00120	B	F0900		1
	01101	20290570XX	GRANULES PS ATOCHE	KG	.00500	B	F0900		1
	03601	20290570XX	GRANULES PS ATOCHE	KG	.00550	B	F0900		1
	03401	20290570XX	GRANULES PS ATOCHE	KG	.01100	B	F0900		1
	01201	20290570XX	GRANULES PS ATOCHE	KG	.00550	B	F0900		1
	03501	20290570XX	GRANULES PS ATOCHE	KG	.00550	B	F0900		1
	01101	20290570XX	GRANULES PS ATOCHE	KG	.00140	B	F0900		1
	01201	20290570XX	GRANULES PS ATOCHE	KG	.00210	B	F0900		1
	00601	JAVRC0000001	SHALLOW GREEN RAW	KG	.00500	B	F0900		1
	00801	JAVRC0000001	SHALLOW GREEN RAW	KG	.00450	B	F0900		1
	00701	JAVRC0000001	SHALLOW GREEN RAW	KG	.00900	B	F0900		1
	02201	JAVRC0000001	SHALLOW GREEN RAW	KG	.01300	B	F0900		1
	02201	20290570XX	GRANULES PS ATOCHE	KG	.01000	B	F0900		1

PL DWG NO.: JP990016
PL TITLE : 1DVD PKG PL
ISSUE DATE: 11-13-99
ISSUED BY : KK HO
* = CRITICAL ITEM

PAGE: 1
REV NO: 20
REVISE DATE: 12-08-00
PRINT DATE: 03-28-01
< GROUP NO. / QUANTITY >

E	ITEM	DRAWING NO.	PART NAME/TEXT	UM	QTYFAC	MB	TMING	PL REV	01 EA
	#001	JP99001601EA	DVD1.0 PKG PL	PC			F1699	07	A
	0050	J96000007000	MASTER CARTON	PC	1.00000	B	F4699	02	1
	0060	J97200008000	CUSHION SIDE	PC	1.00000	B	F5099	02	1
	0065	J97200019000	CUSHION SIDE L	PC	1.00000	B	F0200	02	1
	0070	J54000000500	ASS'Y REMOCON	PC	1.00000	B	F4699	02	1
	0080	21004090XX	BATNCMAG 1.5V AA 6	PR	1.00000	B	F1400	06	2

	0090	J90200007001	MANUAL DVD1	PC	1.00000	B	F3900	16	1
	0110	J97100506000	CARD-POST	PC	1.00000	B	F0900	04	1
	0120	J97100507100	SAFETY LEAF	PC	1.00000	B	F0101	18	1
	0130	J97000501000	POLY BAG PE T0.05	PC	1.00000	B	F3100	12	2
	0140	J90400011000	LBL-BARCODE DVD1	PC	1.00000	B	F0900	04	2
	0150	J97100502000	LABEL-DATE	PC	1.00000	B	F3600	14	1
	0160	J97100503000	LABEL RISK	PC	1.00000	B	F5099	02	1
	0170	J90400012000	LBL S/N DVD1 EU	PC	1.00000	B	F0900	04	1
	0190	J94330001000	CORD RCA 3P1500 JW	PC	1.00000	B	F1400	06	1
	0200	J94310002000	CORD DIN 1P 1500 J	PC	1.00000	B	F2600	10	1
	0210	J94310004000	MONO PLUG 1P JW-81	PC	1.00000	B	F0400	03	1
	0220	J90300007000	LABEL "PLEASE"	PC	1.00000	B	F0900	04	1
	0230	20715540XX	AC CPL BAG PE CRKD	PC	1.00000	B	F5000	20	1
	0240	20932750XX	AC CPL BAG PE 250M	PC	1.00000	B	F1100	05	1
	0250	20194780XX	CABLE-FIX CABLE-TI	PC	1.00000	B	F1100	05	1
	0260	J97000502000	SHEET PE T0.5	PC	1.00000	B	F1100	05	1
	0270	J90400013000	LABEL MADE IN CHIN	PC	1.00000	B	F1700	07	2

PL DWG NO.: JE990131
PL TITLE : 1DVD MAINBD ASM
ISSUE DATE: 11-13-99
ISSUED BY : KK HO
* = CRITICAL ITEM

PAGE: 1
REV NO: 13
REVISE DATE: 08-07-00
PRINT DATE: 03-28-01
< GROUP NO. / QUANTITY >

								PL REV	01 EA
E	ITEM	DRAWING NO.	PART NAME/TEXT	UM	QTYFAC	MB	TMING		
	#001	JE99013101EA	DVD1.0 MNBD ASM	PC			F4699	09	A
E	'020	JE99013201EA	DVD1.0 MNBD APP	PC	1.00000	M	F4899	09	1
	'060	J3523104540X	CAP C/D/T .1U 25V	PC	1.00000	B	F1500	07	1
	'070	285A11150001	SOLDER BAR	KG	.02000	B	F2600	12	1
	'080	15481260XX	SLDC FLUX LRES FOA	LI	.03000	B	F2600	12	1
	CC201	J4114102000X	CARD 10P 200MM 1.2	PC	1.00000	B	F2500	10	1
	CC202	J4114121700X	CABLE 1.25 12P 170	PC	1.00000	B	F0800	04	1
	CC203	J4111211300X	CABLE1.0 21P 130MM	PC	1.00000	B	F0800	04	1
	CC205	J4111151100X	CABLE 1.0 15P 110	PC	1.00000	B	F0800	04	1
	CN201	J4300019912X	CNT 17P 350-430MM	PC	1.00000	B	F1700	09	1
	CP208	J4420040271X	CNT PLUG 2P 2.5 JS	PC	1.00000	B	F0800	04	1
	CP212	J4420030240X	CON WAFER 2P 2.0	PC	1.00000	B	F4899	02	1
	CP213	J4420030440X	CNT PLUG 4P 2.0MM	PC	1.00000	B	F4899	02	1
	CP214	J4420031140X	CNT ST 11P 2.0	PC	1.00000	B	F4899	02	1
	ICM20	J2113111001X	IC LB1641 MOTOR DR	PC	1.00000	B	F5099	03	1
	LM201	J2612222023X	COIL RA 22UH K	PC	1.00000	B	F0900	05	1
	L206	J2612222923X	2.2UH KSU606-2R2K	PC	1.00000	B	F0900	05	1
C2	WI01	J4114600501X	WIRE 1P 50MM 30# B	PC	1.00000	M	F2500	10	1
C2	WI02	J4114600801X	WIRE 1P 80MM 30# B	PC	1.00000	M	F2600	11	1
	X201	J3914010036X	CRYSTAL 27M 16.5PF	PC	1.00000	B	F0800	04	1

PL DWG NO.: JE990135
PL TITLE : 1DVD FRONTBD ASM
ISSUE DATE: 11-13-99
ISSUED BY : KK HO
* = CRITICAL ITEM

PAGE: 1
REV NO: 17
REVISE DATE: 02-21-01
PRINT DATE: 03-28-01
< GROUP NO. / QUANTITY >

								PL REV	01 EA
E	ITEM	DRAWING NO.	PART NAME/TEXT	UM	QTYFAC	MB	TMING		
	#001	JE99013501EA	DVD1.0 FRBD ASM	PC			F4699	03	A
E	'020	JE99013601EA	DVD1.0 FRBD APP	PC	1.00000	M	F4699	03	1
	'050	J67300010000	SPONGE FL	PC	1.00000	B	F2500	12	1
	'070	J60300024000	BKT PHONE	PC	1.00000	B	F4699	03	1
	'090	J67300009000	SPONGE FL	PC	1.00000	B	F2500	12	2
	'100	285A11150001	SOLDER BAR	KG	.03000	B	F2600	14	1

	'110	15481260XX	SLDC FLUX LRES FOA	LI	.03000	B	F2600	14	1
	'120	285A11150011	SOLDER WIRE 40-60	KG	.00500	B	F2600	14	1
	CC902	J4113121200X	CABLE1.0 13P 120MM	PC	1.00000	B	F1200	07	1
	CN901	J4300019909X	CNT 5P 220MM DL 2.	PC	1.00000	B	F1500	09	1
	CN902	J4422101327X	FPC PLUG 1.0 13P	PC	1.00000	B	F4899	01	1
	CN903	J4300019905X	CNT 4P 140 DL 2.0#	PC	1.00000	B	F4899	01	1
	CN904	J4300019910X	CNT 3P 620MM DL 2.	PC	1.00000	B	F1500	09	1
	CN905	J4300019911X	CNT 300MM SL 7.92	PC	1.00000	B	F1500	09	1
	CP901	J4420030740X	CNT PLUG 2.0ST 7P	PC	1.00000	B	F1500	09	1
	CP903	J4420030440X	CNT PLUG 4P 2.0MM	PC	1.00000	B	F4699		1
	CP904	J4420030340X	CNT PLUG 2.0 ST 3P	PC	1.00000	B	F4699	03	1
	DG901	J4433220130X	JACK 2P	PC	1.00000	B	F2500	12	1
	D904	J2302310012X	LED RED/GREEN 5	PC	1.00000	B	F4699	03	1
	D907	J2221216000X	DIODE RECT IN4004	PC	1.00000	B	F0801	17	1
	FL901	J2350120010X	VFD HNV-12SM05 SAM	PC	1.00000	B	F4899	03	1
	HP901	J44329000102	JACK MIC 9P GOLD	PC	1.00000	B	F4699		1
	IC901	J2132314010X	IC CPU CXP82324 QF	PC	1.00000	B	F1700	11	1
	LD901	J2301213022X	LED GN LTL1CHGEC 3	PC	1.00000	B	F4899	03	1
	LD902	J2301213022X	LED GN LTL1CHGEC 3	PC	1.00000	B	F4899	03	1
	LD903	J2301213022X	LED GN LTL1CHGEC 3	PC	1.00000	B	F4899	03	1
	LD904	J2301213022X	LED GN LTL1CHGEC 3	PC	1.00000	B	F4899	03	1
	LD905	J2301213022X	LED GN LTL1CHGEC 3	PC	1.00000	B	F4899	03	1
	LD906	J2301213022X	LED GN LTL1CHGEC 3	PC	1.00000	B	F4899	03	1
	LD907	J2301213022X	LED GN LTL1CHGEC 3	PC	1.00000	B	F4899	03	1
	LD908	J2301213022X	LED GN LTL1CHGEC 3	PC	1.00000	B	F4899	03	1
	LD909	J2301213022X	LED GN LTL1CHGEC 3	PC	1.00000	B	F4899	03	1
	LD910	J2301213022X	LED GN LTL1CHGEC 3	PC	1.00000	B	F4899	03	1
	LD911	J2301213022X	LED GN LTL1CHGEC 3	PC	1.00000	B	F4899	03	1
	LD912	J2301213022X	LED GN LTL1CHGEC 3	PC	1.00000	B	F4899	03	1
	LD913	J2301213022X	LED GN LTL1CHGEC 3	PC	1.00000	B	F4899	03	1
	LG901	J4141001400X	LUG 1P 18# 140MM	PC	1.00000	B	F3100	16	1
	LG902	J4141001200X	LUG 1P 18# 120MM B	PC	1.00000	B	F1400	08	1
	LG903	J4141301001X	WIRE 1P 100 #24	PC	1.00000	B	F2800	15	1
	LG904	J4141301001X	WIRE 1P 100 #24	PC	1.00000	B	F2800	15	1
	OP901	J2123233001X	IC LTV817	PC	1.00000	B	F4699	03	1
	PS901	J46203000101	PWR SW SDDLB14700	PC	1.00000	B	F4699		1
	RM901	J2411320014X	REM 38KHZ	PC	1.00000	B	F1200	07	1
	VR901	J32214000401	VOLUM RK09K12A ALP	PC	1.00000	B	F4899	01	1
	X901	J3911030000X	RESON ZTT10MHZ CQ	PC	1.00000	B	F4699		1

PL DWG NO.: JE990139
PL TITLE : 1DVD OUTBD ASM
ISSUE DATE: 11-13-99
ISSUED BY : KK HO
* = CRITICAL ITEM

PAGE: 1
REV NO: 11
REVISE DATE: 09-22-00
PRINT DATE: 03-28-01
< GROUP NO. / QUANTITY >

								PL REV	01 EA
E	ITEM	DRAWING NO.	PART NAME/TEXT	UM	QTYFAC	MB	TMING		
	#001	JE99013901EA	DVD1.0 OUTBD ASM	PC			F4699	04	A
E	'020	JE99014001EA	DVD1.0 OUTBD APP	PC	1.00000	M	F4699	05	1
C2	'031	J4114600901X	WIRE 1P 30# 90MM	PC	1.00000	M	F2200	07	1
C2	'032	J4114600601X	WIRE 1P 30# 60MM	PC	1.00000	M	F2200	07	1
C2	'033	J4114600201X	WIRE 1P 20MM 30#	PC	1.00000	M	F2500	09	1
	'050	285A11150001	SOLDER BAR	KG	.03000	B	F2600	10	1
	'060	15481260XX	SLDC FLUX LRES FOA	LI	.03000	B	F2600	10	1
	'070	285A11150011	SOLDER WIRE 40-60	KG	.00500	B	F2600	10	1
	'080	J3003101529X	RES CARBON 100 OHM	PC	1.00000	B	F3800	11	1
	CN801	J4300019901X	CNT 7P 680 DL 2.0#	PC	1.00000	B	F4899	01	1
	CN802	J4300019904X	CNT 10P 120 DL 2.0	PC	1.00000	B	F4899	01	1
	CP203	J4422002127X	FPC ST 1.0 21P	PC	1.00000	B	F4899	01	1
	CP205	J4422001527X	FPC ST 1.0 15P	PC	1.00000	B	F4899	01	1
	CP801	J4420030740X	CNT PLUG 2.0ST 7P	PC	1.00000	B	F4699		1

	IC804	J2121202001X	IC SW GL3812	PC	1.00000	B	F5099	02	1
	IC806	J2123829001X	FIBER OPT GP1F32T	PC	1.00000	B	F4699		1
	JK801	J44301000100	JACK RCA 1P BK GND	PC	1.00000	B	F2500	08	1
	JK802	J44372100205	SCART CONNECTOR	PC	1.00000	B	F5099	04	1
	JK803	J44372100205	SCART CONNECTOR	PC	1.00000	B	F5099	02	1
	JK804	J44312000100	JACK RCA+S GNDCAP	PC	1.00000	B	F4899	01	1
	JK806	J44302000600	JACK RCA 2P, JE020	PC	1.00000	B	F4899	01	1
	TR801	J2831000014X	PULSE TRANS DAP-99	PC	1.00000	B	F1699	05	1
	TR801	J2831020105X	PULSE TRANS EP-7 2	PC	1.00000	B	F3800	11	0

PL DWG NO.: JE990132
PL TITLE : 1DVD MAINBD APP
ISSUE DATE: 11-13-99
ISSUED BY : KK HO
* = CRITICAL ITEM

PAGE: 1
REV NO: 08
REVISE DATE: 08-04-00
PRINT DATE: 03-28-01
< GROUP NO. / QUANTITY >

PL 01

E	ITEM	DRAWING NO.	PART NAME/TEXT	UM	QTYFAC	MB	TMING	REV	EA
	#001	JE99013201EA	DVD1.0 MNBD APP	PC			F4699	06	A
E	'020	JE99013401EA	DVD1.0 MNBD SMT	PC	1.00000	M	F4699	06	1
	'021	J40301000101	MN PCB 220*120	PC	1.00000	B	F1500	04	1
	DM201	J2221456534X	D-ZENER .5W Z5V6	PC	1.00000	B	F4699		1
	DM202	J2221510304X	DIODE SCHOTTKY RB4	PC	1.00000	B	F3100	08	1
	DM203	J2221010000X	DIODE SW IN4148	PC	1.00000	B	F4699		1
	DM204	J2221010000X	DIODE SW IN4148	PC	1.00000	B	F4699		1

PL DWG NO.: JE990134
PL TITLE : 1DVD MAINBD SMT
ISSUE DATE: 11-13-99
ISSUED BY : KK HO
* = CRITICAL ITEM

PAGE: 1
REV NO: 11
REVISE DATE: 02-21-01
PRINT DATE: 03-28-01
< GROUP NO. / QUANTITY >

PL 01

E	ITEM	DRAWING NO.	PART NAME/TEXT	UM	QTYFAC	MB	TMING	REV	EA
	#001	JE99013401EA	DVD1.0 MNBD SMT	PC			F4699	08	A
	CM203	J3525104540X	CC/CHIP 0.1U 25V Z	PC	1.00000	B	F4699		1
	CM204	J3525104540X	CC/CHIP 0.1U 25V Z	PC	1.00000	B	F4699		1
	CM206	J3480110036X	CE/C MV 10U 16V	PC	1.00000	B	F0900	04	1
	CM207	J3480110136X	CE/C MV 100U 16V	PC	1.00000	B	F4699		1
	CM212	J3515100270X	CC CHIP 10PF 50V D	PC	1.00000	B	F4899	01	1
	CM214	J3515100270X	CC CHIP 10PF 50V D	PC	1.00000	B	F4899	01	1
	CM215	J3515100270X	CC CHIP 10PF 50V D	PC	1.00000	B	F4899	01	1
	CN203	J4422402123X	FPC ST 1.0 21P	PC	1.00000	B	F5099	02	1
	CN205	J4422401523X	FPC ST 1.0 15P	PC	1.00000	B	F5099	02	1
	CN208	J4422501327X	FPC ANG 1.0 13P	PC	1.00000	B	F5099	02	1
	CP202	J4422401523X	FPC ST 1.0 15P	PC	1.00000	B	F1100	05	1
	CP207	J4422411220X	FPC ST 1.25 12P	PC	1.00000	B	F5099	02	1
	CP802	J4425031040X	CNT SMD 10P 2.0	PC	1.00000	B	F5099	02	1
	C205	J3480110976X	CE/C MV 1U 50V	PC	1.00000	B	F0800	03	1
	C206	J3515100270X	CC CHIP 10PF 50V D	PC	1.00000	B	F0900	04	1
	C211	J3525104540X	CC/CHIP 0.1U 25V Z	PC	1.00000	B	F4699		1
	C213	J3525104540X	CC/CHIP 0.1U 25V Z	PC	1.00000	B	F4699		1
	C214	J3525104540X	CC/CHIP 0.1U 25V Z	PC	1.00000	B	F0900	04	1
	C215	J3525104540X	CC/CHIP 0.1U 25V Z	PC	1.00000	B	F0900	04	1
	C216	J3480110136X	CE/C MV 100U 16V	PC	1.00000	B	F4699		1
	C217	J3525103170X	CC/CHIP .01U 50V K	PC	1.00000	B	F4699		1
	C218	J3515331170X	CC/CHIP 330PF 50V	PC	1.00000	B	F4699		1
	C219	J3525332170X	CC/CHIP 3300PF 50V	PC	1.00000	B	F4699		1
	C220	J3525103170X	CC/CHIP .01U 50V K	PC	1.00000	B	F4699		1
	C221	J3480110136X	CE/C MV 100U 16V	PC	1.00000	B	F4699		1
	C222	J3480110136X	CE/C MV 100U 16V	PC	1.00000	B	F4699		1

	C223	J3525103170X	CC/CHIP .01U 50V K	PC	1.00000	B	F4699		1
	C226	J3525104540X	CC/CHIP 0.1U 25V Z	PC	1.00000	B	F4699		1
	C227	J3525104540X	CC/CHIP 0.1U 25V Z	PC	1.00000	B	F4699		1
	C228	J3525104540X	CC/CHIP 0.1U 25V Z	PC	1.00000	B	F4699		1
	C229	J3525104540X	CC/CHIP 0.1U 25V Z	PC	1.00000	B	F4699		1
	C230	J3525104540X	CC/CHIP 0.1U 25V Z	PC	1.00000	B	F4699		1
	C239	J3515240270X	CC/CHIP 24PF 50V 2	PC	1.00000	B	F1500	06	1
	C240	J3515240270X	CC/CHIP 24PF 50V 2	PC	1.00000	B	F1500	06	1
	C241	J3525104540X	CC/CHIP 0.1U 25V Z	PC	1.00000	B	F4699		1
	C242	J3525104540X	CC/CHIP 0.1U 25V Z	PC	1.00000	B	F4699		1
	C243	J3525104540X	CC/CHIP 0.1U 25V Z	PC	1.00000	B	F4699		1
	C244	J3525104540X	CC/CHIP 0.1U 25V Z	PC	1.00000	B	F4699		1
	C245	J3525104540X	CC/CHIP 0.1U 25V Z	PC	1.00000	B	F4699		1
	C246	J3525104540X	CC/CHIP 0.1U 25V Z	PC	1.00000	B	F4699		1
	C247	J3525104540X	CC/CHIP 0.1U 25V Z	PC	1.00000	B	F4699		1
	C248	J3525104540X	CC/CHIP 0.1U 25V Z	PC	1.00000	B	F4699		1
	C249	J3525104540X	CC/CHIP 0.1U 25V Z	PC	1.00000	B	F4699		1
	C250	J3525104540X	CC/CHIP 0.1U 25V Z	PC	1.00000	B	F4699		1
	C251	J3525103170X	CC/CHIP .01U 50V K	PC	1.00000	B	F4699		1
	C252	J3480110136X	CE/C MV 100U 16V	PC	1.00000	B	F4699		1
	C253	J3525103170X	CC/CHIP .01U 50V K	PC	1.00000	B	F4699		1
	C254	J3480110136X	CE/C MV 100U 16V	PC	1.00000	B	F4699		1
	C255	J3525103170X	CC/CHIP .01U 50V K	PC	1.00000	B	F4699		1
	C256	J3480110136X	CE/C MV 100U 16V	PC	1.00000	B	F4899	01	1
	C257	J3525103170X	CC/CHIP .01U 50V K	PC	1.00000	B	F4699		1
	C258	J3480110036X	CE/C MV 10U 16V	PC	1.00000	B	F4699		1
	C259	J3525103170X	CC/CHIP .01U 50V K	PC	1.00000	B	F4699		1
	C260	J3480110136X	CE/C MV 100U 16V	PC	1.00000	B	F4899	01	1
	C261	J3525104540X	CC/CHIP 0.1U 25V Z	PC	1.00000	B	F4899	01	1
	C262	J3480122036X	CE/C MV 22U 16V	PC	1.00000	B	F4899	01	1
	C263	J3480122036X	CE/C MV 22U 16V	PC	1.00000	B	F4699		1
	C265	J3515100270X	CC CHIP 10PF 50V D	PC	1.00000	B	F4699		1
	C266	J3515100270X	CC CHIP 10PF 50V D	PC	1.00000	B	F4699		1
	C267	J3515100270X	CC CHIP 10PF 50V D	PC	1.00000	B	F4699		1
	C268	J3515100270X	CC CHIP 10PF 50V D	PC	1.00000	B	F4699		1
	C270	J3515200270X	CC/CHIP 20P 50V	PC	1.00000	B	F4699		1
	C301	J3515100270X	CC CHIP 10PF 50V D	PC	1.00000	B	F4699		1
	C312	J3515471170X	C-CHIP 2012SL 470P	PC	1.00000	B	F4699		1
	C332	J3525104540X	CC/CHIP 0.1U 25V Z	PC	1.00000	B	F4699		1
	C333	J3525104540X	CC/CHIP 0.1U 25V Z	PC	1.00000	B	F4699		1
	C334	J3525104540X	CC/CHIP 0.1U 25V Z	PC	1.00000	B	F4699		1
	C335	J3525104540X	CC/CHIP 0.1U 25V Z	PC	1.00000	B	F4699		1
	C336	J3480122036X	CE/C MV 22U 16V	PC	1.00000	B	F4699		1
	C337	J3525104540X	CC/CHIP 0.1U 25V Z	PC	1.00000	B	F4699		1
	C338	J3525104540X	CC/CHIP 0.1U 25V Z	PC	1.00000	B	F4699		1
	C348	J3480110036X	CE/C MV 10U 16V	PC	1.00000	B	F4699		1
	C349	J3525104540X	CC/CHIP 0.1U 25V Z	PC	1.00000	B	F4699		1
	C350	J3525104540X	CC/CHIP 0.1U 25V Z	PC	1.00000	B	F4699		1
	C351	J3480122036X	CE/C MV 22U 16V	PC	1.00000	B	F4699		1
	C353	J3525104540X	CC/CHIP 0.1U 25V Z	PC	1.00000	B	F4699		1
	C354	J3525104540X	CC/CHIP 0.1U 25V Z	PC	1.00000	B	F4699		1
	C355	J3525104540X	CC/CHIP 0.1U 25V Z	PC	1.00000	B	F4699		1
	C356	J3525104540X	CC/CHIP 0.1U 25V Z	PC	1.00000	B	F4699		1
	C357	J3525104540X	CC/CHIP 0.1U 25V Z	PC	1.00000	B	F4699		1
	C358	J3525104540X	CC/CHIP 0.1U 25V Z	PC	1.00000	B	F4699		1
	C359	J3525104540X	CC/CHIP 0.1U 25V Z	PC	1.00000	B	F4699		1
	C360	J3525104540X	CC/CHIP 0.1U 25V Z	PC	1.00000	B	F4699		1
	C361	J3525104540X	CC/CHIP 0.1U 25V Z	PC	1.00000	B	F4699		1
	C362	J3525104540X	CC/CHIP 0.1U 25V Z	PC	1.00000	B	F4699		1
	C363	J3525104540X	CC/CHIP 0.1U 25V Z	PC	1.00000	B	F4699		1
	C364	J3525104540X	CC/CHIP 0.1U 25V Z	PC	1.00000	B	F4699		1
	C365	J3515330270X	CC/CHIP 33P 50V J	PC	1.00000	B	F4699		1
	C366	J3515330270X	CC/CHIP 33P 50V J	PC	1.00000	B	F4699		1

	C367	J3515330270X	CC/CHIP 33P 50V J	PC	1.00000	B	F4699		1
	C368	J3515330270X	CC/CHIP 33P 50V J	PC	1.00000	B	F4699		1
	C369	J3515330270X	CC/CHIP 33P 50V J	PC	1.00000	B	F4699		1
	C402	J3480122116X	CE/C MV 220U 6.3V	PC	1.00000	B	F4699		1
	C404	J3480122116X	CE/C MV 220U 6.3V	PC	1.00000	B	F4699		1
	C406	J3480122116X	CE/C MV 220U 6.3V	PC	1.00000	B	F4699		1
	C408	J3480122116X	CE/C MV 220U 6.3V	PC	1.00000	B	F4699		1
	C409	J3525104540X	CC/CHIP 0.1U 25V Z	PC	1.00000	B	F4699		1
	C410	J3515200270X	CC/CHIP 20P 50V	PC	1.00000	B	F4699		1
	C411	J3515680270X	CC/CHIP 68P 2012	PC	1.00000	B	F4699		1
	C412	J3515200270X	CC/CHIP 20P 50V	PC	1.00000	B	F4699		1
	C413	J3525104540X	CC/CHIP 0.1U 25V Z	PC	1.00000	B	F4699		1
	C414	J3515150270X	CC/CHIP 15P 50V	PC	1.00000	B	F4699		1
	C415	J3515200270X	CC/CHIP 20P 50V	PC	1.00000	B	F4699		1
	C416	J3515680270X	CC/CHIP 68P 2012	PC	1.00000	B	F4699		1
	C417	J3515200270X	CC/CHIP 20P 50V	PC	1.00000	B	F4699		1
	C418	J3515150270X	CC/CHIP 15P 50V	PC	1.00000	B	F4699		1
	C419	J3515200270X	CC/CHIP 20P 50V	PC	1.00000	B	F4699		1
	C420	J3515680270X	CC/CHIP 68P 2012	PC	1.00000	B	F4699		1
	C421	J3515200270X	CC/CHIP 20P 50V	PC	1.00000	B	F4699		1
	C422	J3515150270X	CC/CHIP 15P 50V	PC	1.00000	B	F4699		1
	C423	J3515200270X	CC/CHIP 20P 50V	PC	1.00000	B	F4699		1
	C424	J3515680270X	CC/CHIP 68P 2012	PC	1.00000	B	F4699		1
	C425	J3515200270X	CC/CHIP 20P 50V	PC	1.00000	B	F4699		1
	C426	J3515150270X	CC/CHIP 15P 50V	PC	1.00000	B	F4699		1
	C427	J3515200270X	CC/CHIP 20P 50V	PC	1.00000	B	F4699		1
	C428	J3515680270X	CC/CHIP 68P 2012	PC	1.00000	B	F4699		1
	C429	J3515200270X	CC/CHIP 20P 50V	PC	1.00000	B	F4699		1
	C430	J3515150270X	CC/CHIP 15P 50V	PC	1.00000	B	F4699		1
	C431	J3515200270X	CC/CHIP 20P 50V	PC	1.00000	B	F4699		1
	C432	J3515680270X	CC/CHIP 68P 2012	PC	1.00000	B	F4699		1
	C433	J3515200270X	CC/CHIP 20P 50V	PC	1.00000	B	F4699		1
	C434	J3515150270X	CC/CHIP 15P 50V	PC	1.00000	B	F4699		1
	C435	J3525104540X	CC/CHIP 0.1U 25V Z	PC	1.00000	B	F4699		1
	C436	J3525104540X	CC/CHIP 0.1U 25V Z	PC	1.00000	B	F4699		1
	C440	J3480110136X	CE/C MV 100U 16V	PC	1.00000	B	F4899	01	1
	C441	J3525104540X	CC/CHIP 0.1U 25V Z	PC	1.00000	B	F4899	01	1
	C450	J3480110036X	CE/C MV 10U 16V	PC	1.00000	B	F4699		1
	C451	J3525104540X	CC/CHIP 0.1U 25V Z	PC	1.00000	B	F4699		1
	C452	J3525104540X	CC/CHIP 0.1U 25V Z	PC	1.00000	B	F4699		1
	C453	J3480110036X	CE/C MV 10U 16V	PC	1.00000	B	F4699		1
	C454	J3525104540X	CC/CHIP 0.1U 25V Z	PC	1.00000	B	F4699		1
	C455	J3480110036X	CE/C MV 10U 16V	PC	1.00000	B	F4699		1
	C460	J3480110036X	CE/C MV 10U 16V	PC	1.00000	B	F4699		1
	C461	J3525104540X	CC/CHIP 0.1U 25V Z	PC	1.00000	B	F4699		1
	C486	J3480133116X	CE/C MV 330U 6.3V	PC	1.00000	B	F4699		1
	C487	J3525104540X	CC/CHIP 0.1U 25V Z	PC	1.00000	B	F4699		1
	C488	J3525104540X	CC/CHIP 0.1U 25V Z	PC	1.00000	B	F4699		1
	C489	J3525104540X	CC/CHIP 0.1U 25V Z	PC	1.00000	B	F4699		1
	C490	J3525104540X	CC/CHIP 0.1U 25V Z	PC	1.00000	B	F4699		1
	C495	J3480133116X	CE/C MV 330U 6.3V	PC	1.00000	B	F4699		1
	C496	J3525104540X	CC/CHIP 0.1U 25V Z	PC	1.00000	B	F4699		1
	C497	J3525104540X	CC/CHIP 0.1U 25V Z	PC	1.00000	B	F4699		1
	C498	J3525104540X	CC/CHIP 0.1U 25V Z	PC	1.00000	B	F4699		1
	C499	J3525104540X	CC/CHIP 0.1U 25V Z	PC	1.00000	B	F4699		1
	C503	J3515150270X	CC/CHIP 15P 50V	PC	1.00000	B	F4699		1
	C504	J3515150270X	CC/CHIP 15P 50V	PC	1.00000	B	F4699		1
	C505	J3525104540X	CC/CHIP 0.1U 25V Z	PC	1.00000	B	F4699		1
	C506	J3525104540X	CC/CHIP 0.1U 25V Z	PC	1.00000	B	F4699		1
	C507	J3515100270X	CC CHIP 10PF 50V D	PC	1.00000	B	F4699		1
	C508	J3515100270X	CC CHIP 10PF 50V D	PC	1.00000	B	F4699		1
	C509	J3515100270X	CC CHIP 10PF 50V D	PC	1.00000	B	F4699		1
	C510	J3515100270X	CC CHIP 10PF 50V D	PC	1.00000	B	F4699		1

	C511	J3515100270X	CC CHIP 10PF 50V D	PC	1.00000	B	F4699		1
	C512	J3515100270X	CC CHIP 10PF 50V D	PC	1.00000	B	F4699		1
	C513	J3515100270X	CC CHIP 10PF 50V D	PC	1.00000	B	F4699		1
	C520	J3480110136X	CE/C MV 100U 16V	PC	1.00000	B	F4699		1
	C521	J3480110136X	CE/C MV 100U 16V	PC	1.00000	B	F4699		1
	D401	J2244010104X	DIODE CHIP 1SS355	PC	1.00000	B	F4899	01	1
	IC201	J2135307001X	IC STI5505AVB	PC	1.00000	B	F5099	02	1
	IC204	J2116007001X	IC 74HCU04M1R HEX	PC	1.00000	B	F4699		1
	IC211	J2131007002X	IC FLASH M29F800T	PC	1.00000	B	F5099	02	1
	IC211	J2131016001X	IC FLASH TMS29LF80	PC	1.00000	B	F1700	07	0
	IC212	J2131003002X	IC KM416C1204CT-6	PC	1.00000	B	F4699		1
	IC212	J2131003009X	IC K4E151611C-TC60	PC	1.00000	B	F0900	04	0
	IC213	J2131003010X	IC SDRAM KS161622D	PC	1.00000	B	F2200	09	1
	IC214	J2131003010X	IC SDRAM KS161622D	PC	1.00000	B	F2200	09	1
	IC215	J2131007001X	IC M24C02 SOP8	PC	1.00000	B	F4699		1
	IC402	J2133031001X	IC AK4393 AUDIO	PC	1.00000	B	F4699		1
	IC406	J2110007001X	IC TSH95D VIDEO	PC	1.00000	B	F4699		1
	IC407	J2110007001X	IC TSH95D VIDEO	PC	1.00000	B	F4699		1
	IC408	J2112912001X	IC 7805DLA REG	PC	1.00000	B	F5099	02	1
	J201	J3024000120X	RES 0 OHM 1/10W J	PC	1.00000	B	F2800	10	1
	J202	J3024000120X	RES 0 OHM 1/10W J	PC	1.00000	B	F0800	03	1
	J203	J3024000120X	RES 0 OHM 1/10W J	PC	1.00000	B	F0800	03	1
	J204	J3024000120X	RES 0 OHM 1/10W J	PC	1.00000	B	F0800	03	1
	J205	J3024000120X	RES 0 OHM 1/10W J	PC	1.00000	B	F0800	03	1
	J206	J3024000120X	RES 0 OHM 1/10W J	PC	1.00000	B	F0800	03	1
	J207	J3024000120X	RES 0 OHM 1/10W J	PC	1.00000	B	F0800	03	1
	L202	J2611022011X	COIL CHIP ELJFC220	PC	1.00000	B	F4699		1
	L203	J2611022011X	COIL CHIP ELJFC220	PC	1.00000	B	F4699		1
	L205	J2631300011X	BEAD 120XOHM	PC	1.00000	B	F4699		1
	L207	J2631330085X	BEAD FCM3216V 2K	PC	1.00000	B	F0800	03	1
	L208	J2631330085X	BEAD FCM3216V 2K	PC	1.00000	B	F0800	03	1
	L209	J2631330085X	BEAD FCM3216V 2K	PC	1.00000	B	F0800	03	1
	L210	J2631330085X	BEAD FCM3216V 2K	PC	1.00000	B	F0800	03	1
	L211	J2631330085X	BEAD FCM3216V 2K	PC	1.00000	B	F0800	03	1
	L212	J2631330085X	BEAD FCM3216V 2K	PC	1.00000	B	F0800	03	1
	L330	J2611022011X	COIL CHIP ELJFC220	PC	1.00000	B	F4899	01	1
	L332	J2611022011X	COIL CHIP ELJFC220	PC	1.00000	B	F4699		1
	L333	J2611022011X	COIL CHIP ELJFC220	PC	1.00000	B	F0900	04	1
	L334	J2631330085X	BEAD FCM3216V 2K	PC	1.00000	B	F0800	03	1
	L335	J2631330085X	BEAD FCM3216V 2K	PC	1.00000	B	F0800	03	1
	L336	J2631330085X	BEAD FCM3216V 2K	PC	1.00000	B	F0800	03	1
	L337	J3927201111X	EMI FILTER STC104B	PC	1.00000	B	F0800	03	1
	L338	J3927201111X	EMI FILTER STC104B	PC	1.00000	B	F0800	03	1
	L339	J2631330085X	BEAD FCM3216V 2K	PC	1.00000	B	F0800	03	1
	L340	J2631330085X	BEAD FCM3216V 2K	PC	1.00000	B	F0800	03	1
	L341	J2631330085X	BEAD FCM3216V 2K	PC	1.00000	B	F0800	03	1
	L342	J2631330085X	BEAD FCM3216V 2K	PC	1.00000	B	F0800	03	1
	L343	J2631330085X	BEAD FCM3216V 2K	PC	1.00000	B	F0800	03	1
	L344	J2631330085X	BEAD FCM3216V 2K	PC	1.00000	B	F0800	03	1
	L400	J2611022011X	COIL CHIP ELJFC220	PC	1.00000	B	F4699		1
	L401	J2611022011X	COIL CHIP ELJFC220	PC	1.00000	B	F4699		1
	L402	J2611022011X	COIL CHIP ELJFC220	PC	1.00000	B	F4699		1
	L403	J2611022011X	COIL CHIP ELJFC220	PC	1.00000	B	F4699		1
	L404	J2611082921X	COIL CHIP 8.2UH	PC	1.00000	B	F4699		1
	L405	J2611082921X	COIL CHIP 8.2UH	PC	1.00000	B	F4699		1
	L406	J2611082921X	COIL CHIP 8.2UH	PC	1.00000	B	F4699		1
	L407	J2611082921X	COIL CHIP 8.2UH	PC	1.00000	B	F4699		1
	L408	J2611082921X	COIL CHIP 8.2UH	PC	1.00000	B	F4699		1
	L409	J2611082921X	COIL CHIP 8.2UH	PC	1.00000	B	F4699		1
	L410	J2611082921X	COIL CHIP 8.2UH	PC	1.00000	B	F4699		1
	L411	J2611082921X	COIL CHIP 8.2UH	PC	1.00000	B	F4699		1
	L412	J2611082921X	COIL CHIP 8.2UH	PC	1.00000	B	F4699		1
	L413	J2611082921X	COIL CHIP 8.2UH	PC	1.00000	B	F4699		1

	L414	J2611082921X	COIL CHIP 8.2UH	PC	1.00000	B	F4699		1
	L415	J2611082921X	COIL CHIP 8.2UH	PC	1.00000	B	F4699		1
	L416	J2631300011X	BEAD 120XOHM	PC	1.00000	B	F4699		1
	L417	J2631300011X	BEAD 120XOHM	PC	1.00000	B	F4699		1
	L418	J2631300011X	BEAD 120XOHM	PC	1.00000	B	F4699		1
	L419	J2631300011X	BEAD 120XOHM	PC	1.00000	B	F4699		1
	L420	J2611022011X	COIL CHIP ELJFC220	PC	1.00000	B	F4899	01	1
	L421	J2611022011X	COIL CHIP ELJFC220	PC	1.00000	B	F4899	01	1
	L422	J2631330085X	BEAD FCM3216V 2K	PC	1.00000	B	F0800	03	1
	L423	J3927201111X	EMI FILTER STC104B	PC	1.00000	B	F0800	03	1
	L450	J2631300011X	BEAD 120XOHM	PC	1.00000	B	F4699		1
	L452	J2631300011X	BEAD 120XOHM	PC	1.00000	B	F4699		1
	QM201	J2041020201X	TR KTC3875S SOT23	PC	1.00000	B	F4699		1
	QM202	J2041000301X	TR KTA1504S SOT23	PC	1.00000	B	F4699		1
	Q201	J2041020201X	TR KTC3875S SOT23	PC	1.00000	B	F4699		1
	Q202	J2041020201X	TR KTC3875S SOT23	PC	1.00000	B	F4699		1
	Q207	J2041220201X	TR CHIP NPN KRC107	PC	1.00000	B	F0800	03	1
	Q208	J2041220201X	TR CHIP NPN KRC107	PC	1.00000	B	F0800	03	1
	RA201	J3029470120X	RES CHIP 47R 2010	PC	1.00000	B	F4699		1
	RA202	J3029470120X	RES CHIP 47R 2010	PC	1.00000	B	F4699		1
	RA203	J3029470120X	RES CHIP 47R 2010	PC	1.00000	B	F4699		1
	RA204	J3029470120X	RES CHIP 47R 2010	PC	1.00000	B	F4699		1
	RA205	J3029470120X	RES CHIP 47R 2010	PC	1.00000	B	F4699		1
	RA206	J3029470120X	RES CHIP 47R 2010	PC	1.00000	B	F4699		1
	RA207	J3029470120X	RES CHIP 47R 2010	PC	1.00000	B	F4699		1
	RA208	J3029470120X	RES CHIP 47R 2010	PC	1.00000	B	F4699		1
	RA209	J3029470120X	RES CHIP 47R 2010	PC	1.00000	B	F4699		1
	RA210	J3029470120X	RES CHIP 47R 2010	PC	1.00000	B	F4699		1
	RA211	J3029470120X	RES CHIP 47R 2010	PC	1.00000	B	F4699		1
	RA212	J3029470120X	RES CHIP 47R 2010	PC	1.00000	B	F4699		1
	RA213	J3029470120X	RES CHIP 47R 2010	PC	1.00000	B	F4699		1
	RA214	J3029470120X	RES CHIP 47R 2010	PC	1.00000	B	F4699		1
	RA215	J3029470120X	RES CHIP 47R 2010	PC	1.00000	B	F4699		1
	RA216	J3029470120X	RES CHIP 47R 2010	PC	1.00000	B	F4699		1
	RM201	J3024221120X	R-CHIP 220 2012J	PC	1.00000	B	F4899	01	1
	RM202	J3024221120X	R-CHIP 220 2012J	PC	1.00000	B	F4899	01	1
	RM203	J3024471120X	RES CHIP 470 1/10W	PC	1.00000	B	F4699		1
	RM204	J3024471120X	RES CHIP 470 1/10W	PC	1.00000	B	F4699		1
	RM205	J3024562120X	RES CHIP 5K6 1/10W	PC	1.00000	B	F4699		1
	RM206	J3024103120X	RES CHIP 10K 1/10W	PC	1.00000	B	F4699		1
	RM207	J3024683120X	RES CHIP 68K 1/10W	PC	1.00000	B	F4699		1
	RM208	J3024103120X	RES CHIP 10K 1/10W	PC	1.00000	B	F4699		1
	RM209	J3024100120X	R-CHIP 10 2012J	PC	1.00000	B	F4899	01	1
	RM210	J3024562120X	RES CHIP 5K6 1/10W	PC	1.00000	B	F4699		1
	RM211	J3024182120X	RES CHIP 1K8 1/10W	PC	1.00000	B	F4699		1
	RM212	J3024473120X	RES CHIP 47K 1/10W	PC	1.00000	B	F4699		1
	RM222	J3024103120X	RES CHIP 10K 1/10W	PC	1.00000	B	F4699		1
	RM227	J2631320105X	FCM2012H-102T04	PC	1.00000	B	F0800	03	1
	RM229	J2631320105X	FCM2012H-102T04	PC	1.00000	B	F0800	03	1
	RM232	J3024103120X	RES CHIP 10K 1/10W	PC	1.00000	B	F4699		1
	RX06	J3024000120X	RES 0 OHM 1/10W J	PC	1.00000	B	F4699		1
	RX08	J3024103120X	RES CHIP 10K 1/10W	PC	1.00000	B	F4899	01	1
	R201	J3024182120X	RES CHIP 1K8 1/10W	PC	1.00000	B	F4899	01	1
	R202	J3024182120X	RES CHIP 1K8 1/10W	PC	1.00000	B	F4899	01	1
	R203	J3024103120X	RES CHIP 10K 1/10W	PC	1.00000	B	F0900	04	1
	R205	J3024103120X	RES CHIP 10K 1/10W	PC	1.00000	B	F4699		1
	R206	J3024103120X	RES CHIP 10K 1/10W	PC	1.00000	B	F4699		1
	R207	J3024103120X	RES CHIP 10K 1/10W	PC	1.00000	B	F4699		1
	R208	J3024103120X	RES CHIP 10K 1/10W	PC	1.00000	B	F4699		1
	R209	J3024103120X	RES CHIP 10K 1/10W	PC	1.00000	B	F0900	04	1
	R210	J3024472120X	RES CHIP 4K7 1/10W	PC	1.00000	B	F4699		1
	R211	J3024472120X	RES CHIP 4K7 1/10W	PC	1.00000	B	F4699		1
	R212	J3024103120X	RES CHIP 10K 1/10W	PC	1.00000	B	F4699		1

	R213	J3024560120X	RES CHIP 56 1/10WJ	PC	1.00000	B	F4699		1
	R214	J3024000120X	RES 0 OHM 1/10W J	PC	1.00000	B	F4899	01	1
	R216	J3024103120X	RES CHIP 10K 1/10W	PC	1.00000	B	F4699		1
	R218	J30241873175	RES 18K7 1/10 1%	PC	1.00000	B	F4699		1
	R219	J30241153175	RES 11K5 1/10 1%	PC	1.00000	B	F4699		1
	R222	J3024000120X	RES 0 OHM 1/10W J	PC	1.00000	B	F4899	01	1
	R223	J3024000120X	RES 0 OHM 1/10W J	PC	1.00000	B	F2800	10	1
	R224	J2631320095X	BEAD FCM2012V-601	PC	1.00000	B	F0800	03	1
	R228	J3024331120X	R-CHIP 330 2012J	PC	1.00000	B	F0800	03	1
	R229	J3024105120X	RES CHIP 1M 1/10WJ	PC	1.00000	B	F4699		1
	R230	J3024103120X	RES CHIP 10K 1/10W	PC	1.00000	B	F4699		1
	R231	J3024103120X	RES CHIP 10K 1/10W	PC	1.00000	B	F4699		1
	R232	J3024103120X	RES CHIP 10K 1/10W	PC	1.00000	B	F4699		1
	R233	J3024103120X	RES CHIP 10K 1/10W	PC	1.00000	B	F4699		1
	R234	J3024470120X	RES CHIP 47 1/10W	PC	1.00000	B	F0800	03	1
	R235	J3024470120X	RES CHIP 47 1/10W	PC	1.00000	B	F0800	03	1
	R236	J3024470120X	RES CHIP 47 1/10W	PC	1.00000	B	F0800	03	1
	R237	J3024470120X	RES CHIP 47 1/10W	PC	1.00000	B	F4699		1
	R238	J2631320065X	FCM2012V-221T07	PC	1.00000	B	F0800	03	1
	R239	J2631320065X	FCM2012V-221T07	PC	1.00000	B	F0800	03	1
	R240	J3024470120X	RES CHIP 47 1/10W	PC	1.00000	B	F4699		1
	R243	J2631320245X	BEAD FCM2012C-121T	PC	1.00000	B	F0800	03	1
	R244	J3024000120X	RES 0 OHM 1/10W J	PC	1.00000	B	F4899	01	1
	R247	J3024000120X	RES 0 OHM 1/10W J	PC	1.00000	B	F4899	01	1
	R248	J3024000120X	RES 0 OHM 1/10W J	PC	1.00000	B	F4899	01	1
	R249	J3024472120X	RES CHIP 4K7 1/10W	PC	1.00000	B	F1500	06	1
	R250	J3024472120X	RES CHIP 4K7 1/10W	PC	1.00000	B	F4699		1
	R269	J3024101120X	RES CHIP 100 1/10W	PC	1.00000	B	F4699		1
	R270	J3024101120X	RES CHIP 100 1/10W	PC	1.00000	B	F4699		1
	R271	J2631320075X	FCM2012V-301T07	PC	1.00000	B	F0800	03	1
	R272	J2631320075X	FCM2012V-301T07	PC	1.00000	B	F0800	03	1
	R277	J3024103120X	RES CHIP 10K 1/10W	PC	1.00000	B	F4699		1
	R278	J3024103120X	RES CHIP 10K 1/10W	PC	1.00000	B	F4699		1
	R279	J3024103120X	RES CHIP 10K 1/10W	PC	1.00000	B	F4899	01	1
	R281	J3024103120X	RES CHIP 10K 1/10W	PC	1.00000	B	F4899	01	1
	R283	J3024472120X	RES CHIP 4K7 1/10W	PC	1.00000	B	F4699		1
	R286	J3024470120X	RES CHIP 47 1/10W	PC	1.00000	B	F4699		1
	R289	J2631320105X	FCM2012H-102T04	PC	1.00000	B	F0800	03	1
	R301	J3024122120X	RES CHIP 1K2 1/10W	PC	1.00000	B	F0900	08	1
	R330	J2631330085X	BEAD FCM3216V-2K	PC	1.00000	B	F0800	03	1
	R332	J3024000120X	RES 0 OHM 1/10W J	PC	1.00000	B	F0900	04	1
	R333	J3024470120X	RES CHIP 47 1/10W	PC	1.00000	B	F0801	11	1
	R334	J3024470120X	RES CHIP 47 1/10W	PC	1.00000	B	F0801	11	1
	R335	J3024470120X	RES CHIP 47 1/10W	PC	1.00000	B	F0801	11	1
	R345	J3024000120X	RES 0 OHM 1/10W J	PC	1.00000	B	F4699		1
	R346	J3024000120X	RES 0 OHM 1/10W J	PC	1.00000	B	F4699		1
	R347	J3024473120X	RES CHIP 47K 1/10W	PC	1.00000	B	F0900	04	1
	R348	J3024473120X	RES CHIP 47K 1/10W	PC	1.00000	B	F4699		1
	R349	J3024470120X	RES CHIP 47 1/10W	PC	1.00000	B	F4699		1
	R350	J3024470120X	RES CHIP 47 1/10W	PC	1.00000	B	F0800	03	1
	R351	J3024470120X	RES CHIP 47 1/10W	PC	1.00000	B	F0800	03	1
	R352	J3024470120X	RES CHIP 47 1/10W	PC	1.00000	B	F4699		1
	R353	J3024470120X	RES CHIP 47 1/10W	PC	1.00000	B	F4699		1
	R354	J3024470120X	RES CHIP 47 1/10W	PC	1.00000	B	F4699		1
	R355	J3024470120X	RES CHIP 47 1/10W	PC	1.00000	B	F4699		1
	R356	J3024470120X	RES CHIP 47 1/10W	PC	1.00000	B	F4699		1
	R357	J3024473120X	RES CHIP 47K 1/10W	PC	1.00000	B	F4699		1
	R358	J3024473120X	RES CHIP 47K 1/10W	PC	1.00000	B	F4699		1
	R359	J3024473120X	RES CHIP 47K 1/10W	PC	1.00000	B	F4699		1
	R360	J3024473120X	RES CHIP 47K 1/10W	PC	1.00000	B	F4699		1
	R361	J3024473120X	RES CHIP 47K 1/10W	PC	1.00000	B	F4699		1
	R362	J3024473120X	RES CHIP 47K 1/10W	PC	1.00000	B	F4699		1
	R363	J3024473120X	RES CHIP 47K 1/10W	PC	1.00000	B	F4699		1

	R366	J3024472120X	RES CHIP 4K7 1/10W	PC	1.00000	B	F4699		1
	R367	J3024472120X	RES CHIP 4K7 1/10W	PC	1.00000	B	F4699		1
	R368	J3024472120X	RES CHIP 4K7 1/10W	PC	1.00000	B	F4699		1
	R369	J3024472120X	RES CHIP 4K7 1/10W	PC	1.00000	B	F4699		1
	R370	J3024472120X	RES CHIP 4K7 1/10W	PC	1.00000	B	F4699		1
	R400	J3024479120X	R-CHIP 4R7 2012J	PC	1.00000	B	F4699		1
	R401	J3024479120X	R-CHIP 4R7 2012J	PC	1.00000	B	F4699		1
	R402	J3024479120X	R-CHIP 4R7 2012J	PC	1.00000	B	F4699		1
	R403	J3024479120X	R-CHIP 4R7 2012J	PC	1.00000	B	F4699		1
	R404	J3024391120X	R-CHIP 390 2012J	PC	1.00000	B	F4699		1
	R405	J3024391120X	R-CHIP 390 2012J	PC	1.00000	B	F4699		1
	R406	J3024391120X	R-CHIP 390 2012J	PC	1.00000	B	F4699		1
	R407	J3024681120X	RES CHIP 680 1/10W	PC	1.00000	B	F4699		1
	R408	J3024391120X	R-CHIP 390 2012J	PC	1.00000	B	F4699		1
	R409	J3024391120X	R-CHIP 390 2012J	PC	1.00000	B	F4699		1
	R410	J3024681120X	RES CHIP 680 1/10W	PC	1.00000	B	F1500	06	1
	R411	J3024391120X	R-CHIP 390 2012J	PC	1.00000	B	F0900	04	1
	R412	J3024391120X	R-CHIP 390 2012J	PC	1.00000	B	F4699		1
	R413	J3024391120X	R-CHIP 390 2012J	PC	1.00000	B	F4699		1
	R414	J3024471120X	RES CHIP 470 1/10W	PC	1.00000	B	F0800	03	1
	R415	J3024271120X	R-CHIP 270 1/10W J	PC	1.00000	B	F0800	03	1
	R416	J3024391120X	R-CHIP 390 2012J	PC	1.00000	B	F0900	04	1
	R417	J3024391120X	R-CHIP 390 2012J	PC	1.00000	B	F4699		1
	R418	J3024391120X	R-CHIP 390 2012J	PC	1.00000	B	F4699		1
	R419	J3024681120X	RES CHIP 680 1/10W	PC	1.00000	B	F4699		1
	R420	J3024391120X	R-CHIP 390 2012J	PC	1.00000	B	F4699		1
	R421	J3024391120X	R-CHIP 390 2012J	PC	1.00000	B	F4699		1
	R422	J3024391120X	R-CHIP 390 2012J	PC	1.00000	B	F1500	06	1
	R423	J3024221120X	R-CHIP 220 2012J	PC	1.00000	B	F1500	06	1
	R424	J3024391120X	R-CHIP 390 2012J	PC	1.00000	B	F4699		1
	R425	J3024391120X	R-CHIP 390 2012J	PC	1.00000	B	F4699		1
	R426	J3024391120X	R-CHIP 390 2012J	PC	1.00000	B	F4699		1
	R427	J3024681120X	RES CHIP 680 1/10W	PC	1.00000	B	F4699		1
	R428	J3024479120X	R-CHIP 4R7 2012J	PC	1.00000	B	F4699		1
	R429	J3024479120X	R-CHIP 4R7 2012J	PC	1.00000	B	F4699	06	1
	R430	J3024479120X	R-CHIP 4R7 2012J	PC	1.00000	B	F4699		1
	R431	J3024479120X	R-CHIP 4R7 2012J	PC	1.00000	B	F4699		1
	R440	J3024000120X	RES 0 OHM 1/10W J	PC	1.00000	B	F4899	01	1
	R450	J3024473120X	RES CHIP 47K 1/10W	PC	1.00000	B	F4699		1
	R451	J3024473120X	RES CHIP 47K 1/10W	PC	1.00000	B	F4699		1
	R452	J3024473120X	RES CHIP 47K 1/10W	PC	1.00000	B	F4699		1
	R453	J3024473120X	RES CHIP 47K 1/10W	PC	1.00000	B	F4699		1
	R458	J3024473120X	RES CHIP 47K 1/10W	PC	1.00000	B	F4699		1
	R459	J3024473120X	RES CHIP 47K 1/10W	PC	1.00000	B	F4699		1
	R460	J3024473120X	RES CHIP 47K 1/10W	PC	1.00000	B	F4699		1
	R461	J3024000120X	RES 0 OHM 1/10W J	PC	1.00000	B	F4699		1
	R463	J3024000120X	RES 0 OHM 1/10W J	PC	1.00000	B	F4699		1
	R465	J3024000120X	RES 0 OHM 1/10W J	PC	1.00000	B	F4699		1
	R473	J3024391120X	R-CHIP 390 2012J	PC	1.00000	B	F4699		1
	R474	J3024681120X	RES CHIP 680 1/10W	PC	1.00000	B	F4699		1
	R475	J3024391120X	R-CHIP 390 2012J	PC	1.00000	B	F4699		1
	R476	J3024681120X	RES CHIP 680 1/10W	PC	1.00000	B	F4699		1
	R480	J3024104120X	RES CHIP 100K 1/10	PC	1.00000	B	F4899	01	1
	R481	J3024102120X	RES CHIP 1K 1/10W	PC	1.00000	B	F4899	01	1
	R484	J3024470120X	RES CHIP 47 1/10W	PC	1.00000	B	F4699		1
	R485	J3024470120X	RES CHIP 47 1/10W	PC	1.00000	B	F4699		1
	R486	J3024470120X	RES CHIP 47 1/10W	PC	1.00000	B	F4699		1
	R487	J3024470120X	RES CHIP 47 1/10W	PC	1.00000	B	F4699		1
	R488	J3024470120X	RES CHIP 47 1/10W	PC	1.00000	B	F4699		1
	R489	J3024470120X	RES CHIP 47 1/10W	PC	1.00000	B	F4699		1
	R490	J3024470120X	RES CHIP 47 1/10W	PC	1.00000	B	F4699		1
	R492	J3024102120X	RES CHIP 1K 1/10W	PC	1.00000	B	F4899	01	1
	R493	J3024104120X	RES CHIP 100K 1/10	PC	1.00000	B	F0900	04	1

PL DWG NO.: JE990136
PL TITLE : 1DVD FRONTBD APP
ISSUE DATE: 11-13-99
ISSUED BY : KK HO
* = CRITICAL ITEM

PAGE: 1
REV NO: 11
REVISE DATE: 02-21-01
PRINT DATE: 03-28-01
< GROUP NO. / QUANTITY >

								PL REV	01 EA
E	ITEM	DRAWING NO.	PART NAME/TEXT	UM	QTYFAC	MB	TMING		
	#001	JE99013601EA	DVD1.0 FRBD APP	PC			F4699	02	A
E	'020	JE99013801EA	DVD1.0 FRBD SMT	PC	1.00000	M	F4699	02	1
	'021	J4035100020A	PCB FRONT 330*247	PC	1.00000	B	F1700	07	1
	C901	J3470647031X	CE SSE 47U 16V M	PC	1.00000	B	F1200	05	1
	C906	J3470610111X	CE SSE 100U 6.3V	PC	1.00000	B	F4699		1
	C907	J3471247116X	CE SR470U 6V3 M8*9	PC	1.00000	B	F1500	06	1
	C909	J3470110991X	CE SG 1U 50V M	PC	1.00000	B	F4699	02	1
	C912	J3513561170X	CC/DISC SL 560P50V	PC	1.00000	B	F4699		1
	C913	J3513561170X	CC/DISC SL 560P50V	PC	1.00000	B	F4699		1
	C914	J3523104540X	CAP C/D/T .1U 25V	PC	1.00000	B	F4699		1
	C914L	J3470647931X	CE 4.7UF 16V M	PC	1.00000	B	F4699		1
	C914R	J3470647931X	CE 4.7UF 16V M	PC	1.00000	B	F4699		1
	C915	J3470147031X	CE SG 47U 16V M	PC	1.00000	B	F4699	02	1
	C916	J3471247116X	CE SR470U 6V3 M8*9	PC	1.00000	B	F1500	06	1
	C916L	J3470147031X	CE SG 47U 16V M	PC	1.00000	B	F4699		1
	C916R	J3470147031X	CE SG 47U 16V M	PC	1.00000	B	F4699		1
	C917	J3471247116X	CE SR470U 6V3 M8*9	PC	1.00000	B	F1500	06	1
	C917L	J3471333116X	CE SS330U 6V3 M8*9	PC	1.00000	B	F0900	04	1
	C917R	J3471333116X	CE SS330U 6V3 M8*9	PC	1.00000	B	F0900	04	1
	C918	J3471247116X	CE SR470U 6V3 M8*9	PC	1.00000	B	F1500	06	1
	IC903	J2112505034X	IC KIA7042P 4V2	PC	1.00000	B	F2500	09	1
C2	J901	DA031WA07506	WIRE BUSS 7.5MM	PC	1.00000	M	F1900	08	1
C2	J902	DA031WA07506	WIRE BUSS 7.5MM	PC	1.00000	M	F1900	08	1
C2	J903	DA031WA07506	WIRE BUSS 7.5MM	PC	1.00000	M	F1900	08	1
C2	J904	DA031WA06006	WIRE BUSS 6MM	PC	1.00000	M	F1900	08	1
C2	J905	DA031WA10006	WIRE BUSS 10MM	PC	1.00000	M	F1900	08	1
C2	J910	DA031WA06006	WIRE BUSS 6MM	PC	1.00000	M	F1900	08	1
C2	J911	DA031WA07506	WIRE BUSS 7.5MM	PC	1.00000	M	F1900	08	1
C2	J912	DA031WA07506	WIRE BUSS 7.5MM	PC	1.00000	M	F1900	08	1
C2	J913	DA031WA07506	WIRE BUSS 7.5MM	PC	1.00000	M	F1900	08	1
C2	J914	DA031WA07506	WIRE BUSS 7.5MM	PC	1.00000	M	F1900	08	1
C2	J915	DA031WA07506	WIRE BUSS 7.5MM	PC	1.00000	M	F1900	08	1
C2	J917	DA031WA07506	WIRE BUSS 7.5MM	PC	1.00000	M	F1900	08	1
C2	J918	DA031WA06006	WIRE BUSS 6MM	PC	1.00000	M	F1900	08	1
C2	J919	DA031WA06006	WIRE BUSS 6MM	PC	1.00000	M	F1900	08	1
C2	J920	DA031WA06006	WIRE BUSS 6MM	PC	1.00000	M	F1900	08	1
C2	J921	DA031WA06006	WIRE BUSS 6MM	PC	1.00000	M	F1900	08	1
C2	J922	DA031WA06006	WIRE BUSS 6MM	PC	1.00000	M	F1900	08	1
C2	J923	DA031WA06006	WIRE BUSS 6MM	PC	1.00000	M	F1900	08	1
C2	J924	DA031WA10006	WIRE BUSS 10MM	PC	1.00000	M	F1900	08	1
C2	J925	DA031WA10006	WIRE BUSS 10MM	PC	1.00000	M	F1900	08	1
C2	J926	DA031WA07506	WIRE BUSS 7.5MM	PC	1.00000	M	F1900	08	1
C2	J927	DA031WA10006	WIRE BUSS 10MM	PC	1.00000	M	F1900	08	1
C2	J929	DA031WA07506	WIRE BUSS 7.5MM	PC	1.00000	M	F1900	08	1
C2	J930	DA031WA06006	WIRE BUSS 6MM	PC	1.00000	M	F1900	08	1
C2	J931	DA031WA06006	WIRE BUSS 6MM	PC	1.00000	M	F1900	08	1
C2	J933	DA031WA07506	WIRE BUSS 7.5MM	PC	1.00000	M	F1900	08	1
C2	J934	DA031WA10006	WIRE BUSS 10MM	PC	1.00000	M	F1900	08	1
C2	J935	DA031WA07506	WIRE BUSS 7.5MM	PC	1.00000	M	F1900	08	1
C2	J936	DA031WA12506	WIRE BUSS 12.5MM	PC	1.00000	M	F1900	08	1
C2	J943	DA031WA07506	WIRE BUSS 7.5MM	PC	1.00000	M	F1900	08	1
C2	J944	DA031WA07506	WIRE BUSS 7.5MM	PC	1.00000	M	F1900	08	1
C2	J945	DA031WA10006	WIRE BUSS 10MM	PC	1.00000	M	F1900	08	1

C2	J946	DA031WA07506	WIRE BUSS 7.5MM	PC	1.00000	M	F1900	08	1
C2	J947	DA031WA06006	WIRE BUSS 6MM	PC	1.00000	M	F1900	08	1
C2	J948	DA031WA07506	WIRE BUSS 7.5MM	PC	1.00000	M	F1900	08	1
C2	J950	DA031WA06006	WIRE BUSS 6MM	PC	1.00000	M	F1900	08	1
C2	J951	DA031WA12506	WIRE BUSS 12.5MM	PC	1.00000	M	F1900	08	1
C2	J952	DA031WA20006	WIRE BUSS 20MM	PC	1.00000	M	F1900	08	1
C2	J953	DA031WA20006	WIRE BUSS 20MM	PC	1.00000	M	F1900	08	1
C2	J954	DA031WA10006	WIRE BUSS 10MM	PC	1.00000	M	F1900	08	1
C2	J955	DA031WA15006	WIRE BUSS 15MM	PC	1.00000	M	F1900	08	1
C2	J956	DA031WA12506	WIRE BUSS 12.5MM	PC	1.00000	M	F1900	08	1
C2	J957	DA031WA07506	WIRE BUSS 7.5MM	PC	1.00000	M	F1900	08	1
C2	J958	DA031WA12506	WIRE BUSS 12.5MM	PC	1.00000	M	F1900	08	1
C2	J959	DA031WA06006	WIRE BUSS 6MM	PC	1.00000	M	F1900	08	1
C2	J960	DA031WA06006	WIRE BUSS 6MM	PC	1.00000	M	F1900	08	1
C2	J961	DA031WA06006	WIRE BUSS 6MM	PC	1.00000	M	F1900	08	1
C2	J962	DA031WA20006	WIRE BUSS 20MM	PC	1.00000	M	F1900	08	1
C2	J963	DA031WA15006	WIRE BUSS 15MM	PC	1.00000	M	F1900	08	1
C2	J964	DA031WA17506	WIRE BUSS 17.5MM	PC	1.00000	M	F1900	08	1
C2	J965	DA031WA10006	WIRE BUSS 10MM	PC	1.00000	M	F1900	08	1
C2	J966	DA031WA06006	WIRE BUSS 6MM	PC	1.00000	M	F1900	08	1
C2	J967	DA031WA10006	WIRE BUSS 10MM	PC	1.00000	M	F1900	08	1
C2	J970	DA031WA06006	WIRE BUSS 6MM	PC	1.00000	M	F1900	08	1
C2	J971	DA031WA12506	WIRE BUSS 12.5MM	PC	1.00000	M	F1900	08	1
C2	J972	DA031WA06006	WIRE BUSS 6MM	PC	1.00000	M	F1900	08	1
C2	J973	DA031WA20006	WIRE BUSS 20MM	PC	1.00000	M	F1900	08	1
C2	J974	DA031WA07506	WIRE BUSS 7.5MM	PC	1.00000	M	F1900	08	1
C2	J975	DA031WA07506	WIRE BUSS 7.5MM	PC	1.00000	M	F1900	08	1
C2	J976	DA031WA06006	WIRE BUSS 6MM	PC	1.00000	M	F1900	08	1
C2	J977	DA031WA10006	WIRE BUSS 10MM	PC	1.00000	M	F1900	08	1
C2	J978	DA031WA17506	WIRE BUSS 17.5MM	PC	1.00000	M	F1900	08	1
C2	J979	DA031WA30006	WIRE BUSS 30MM	PC	1.00000	M	F1900	08	1
C2	J980	DA031WA06006	WIRE BUSS 6MM	PC	1.00000	M	F1900	08	1
C2	J981	DA031WA15006	WIRE BUSS 15MM	PC	1.00000	M	F1900	08	1
C2	J982	DA031WA06006	WIRE BUSS 6MM	PC	1.00000	M	F1900	08	1
C2	J983	DA031WA06006	WIRE BUSS 6MM	PC	1.00000	M	F1900	08	1
C2	J984	DA031WA07506	WIRE BUSS 7.5MM	PC	1.00000	M	F1900	08	1
C2	J985	DA031WA06006	WIRE BUSS 6MM	PC	1.00000	M	F1900	08	1
C2	J986	DA031WA06006	WIRE BUSS 6MM	PC	1.00000	M	F1900	08	1
C2	J991	DA031WA07506	WIRE BUSS 7.5MM	PC	1.00000	M	F1900	08	1
	L921	J3927001001X	EMI FILTER TU20MT	PC	1.00000	B	F1200	05	1
	L922	J3927001001X	EMI FILTER TU20MT	PC	1.00000	B	F1200	05	1
	Q907	J2021000601X	TR PNP MPSA56 Y	PC	1.00000	B	F4699	02	1
	Q908	J2021000601X	TR PNP MPSA56 Y	PC	1.00000	B	F4699	02	1
	Q910	J2021060001X	TR NPN KTD1302 B	PC	1.00000	B	F1200	05	1
	Q911	J2021060001X	TR NPN KTD1302 B	PC	1.00000	B	F1200	05	1
	Q912	J2021200002X	TR PNP DTA114YS	PC	1.00000	B	F1200	05	1
	Q914	J2021200501X	TR PNP KRA107M	PC	1.00000	B	F4699	02	1
	SW901	J46500500002	SW TACT	PC	1.00000	B	F4699		1
	SW902	J46500500002	SW TACT	PC	1.00000	B	F4699	02	1
	SW903	J46500500002	SW TACT	PC	1.00000	B	F4699		1
	SW911	J46500500002	SW TACT	PC	1.00000	B	F4699		1
	SW912	J46500500002	SW TACT	PC	1.00000	B	F4699	02	1
	SW913	J46500500002	SW TACT	PC	1.00000	B	F4699		1
	SW921	J46500500002	SW TACT	PC	1.00000	B	F4699		1
	SW922	J46500500002	SW TACT	PC	1.00000	B	F4699	02	1
	SW923	J46500500002	SW TACT	PC	1.00000	B	F4699	02	1

PL DWG NO.: JE990138
PL TITLE : 1DVD FRONTBD SMT
ISSUE DATE: 11-13-99
ISSUED BY : KK HO
* = CRITICAL ITEM

PAGE: 1
REV NO: 09
REVISE DATE: 06-21-00
PRINT DATE: 03-28-01
< GROUP NO. / QUANTITY >

								PL	01
E	ITEM	DRAWING NO.	PART NAME/TEXT	UM	QTYFAC	MB	TMING	REV	EA
	#001	JE99013801EA	DVD1.0 FRBD SMT	PC			F4699	03	A
	C903	J3525104540X	CC/CHIP 0.1U 25V Z	PC	1.00000	B	F4699		1
	C904	J3525104540X	CC/CHIP 0.1U 25V Z	PC	1.00000	B	F4699		1
	C905	J3525104540X	CC/CHIP 0.1U 25V Z	PC	1.00000	B	F4699		1
	C908	J3525104540X	CC/CHIP 0.1U 25V Z	PC	1.00000	B	F4699		1
	C911	J3525104540X	CC/CHIP 0.1U 25V Z	PC	1.00000	B	F4699		1
	C912L	J3525104540X	CC/CHIP 0.1U 25V Z	PC	1.00000	B	F4699		1
	C912R	J3525104540X	CC/CHIP 0.1U 25V Z	PC	1.00000	B	F4699		1
	C913L	J3515471170X	C-CHIP 2012SL 470P	PC	1.00000	B	F4899	01	1
	C913R	J3515471170X	C-CHIP 2012SL 470P	PC	1.00000	B	F4899	01	1
	D906	J2242510011X	D SCHOTTKY RB501V-	PC	1.00000	B	F4699		1
	D983	J2244010104X	DIODE CHIP 1SS355	PC	1.00000	B	F0800	04	1
	IC902	J2110012005X	IC AMP NJM4556AM D	PC	1.00000	B	F5099	02	1
	J907	J3024000120X	RES 0 OHM 1/10W J	PC	1.00000	B	F0900	05	1
	J968	J3024000120X	RES 0 OHM 1/10W J	PC	1.00000	B	F0900	05	1
	J969	J3024000120X	RES 0 OHM 1/10W J	PC	1.00000	B	F0900	05	1
	J981A	J3024000120X	RES 0 OHM 1/10W J	PC	1.00000	B	F0900	05	1
	J981B	J3024000120X	RES 0 OHM 1/10W J	PC	1.00000	B	F0900	05	1
	L901	J2611022011X	COIL CHIP ELJFC220	PC	1.00000	B	F4699		1
	L902	J2611022011X	COIL CHIP ELJFC220	PC	1.00000	B	F4699		1
	L903	J2611022011X	COIL CHIP ELJFC220	PC	1.00000	B	F4699		1
	L904	J2631330085X	BEAD FCM3216V 2K	PC	1.00000	B	F0800	04	1
	L905	J2631330085X	BEAD FCM3216V 2K	PC	1.00000	B	F1200	06	1
	L906	J2631330085X	BEAD FCM3216V 2K	PC	1.00000	B	F1200	06	1
	L907	J3927201111X	EMI FILTER STC104B	PC	1.00000	B	F1200	06	1
	L908	J3927201111X	EMI FILTER STC104B	PC	1.00000	B	F1200	06	1
	L909	J2631330085X	BEAD FCM3216V 2K	PC	1.00000	B	F0800	04	1
	L910	J2631330085X	BEAD FCM3216V 2K	PC	1.00000	B	F0800	04	1
	L911	J2631330085X	BEAD FCM3216V 2K	PC	1.00000	B	F0800	04	1
	L912	J2631330085X	BEAD FCM3216V 2K	PC	1.00000	B	F0800	04	1
	L913	J2631330085X	BEAD FCM3216V 2K	PC	1.00000	B	F0800	04	1
	L914	J2631330085X	BEAD FCM3216V 2K	PC	1.00000	B	F0800	04	1
	L915	J2631330085X	BEAD FCM3216V 2K	PC	1.00000	B	F0800	04	1
	L916	J2631330085X	BEAD FCM3216V 2K	PC	1.00000	B	F1200	06	1
	L917	J2631330085X	BEAD FCM3216V 2K	PC	1.00000	B	F1200	06	1
	L918	J2631330085X	BEAD FCM3216V 2K	PC	1.00000	B	F1200	06	1
	L919	J3024000120X	RES 0 OHM 1/10W J	PC	1.00000	B	F0800	04	1
	L920	J2631320245X	BEAD FCM2012C-121T	PC	1.00000	B	F0800	04	1
	Q904	J2041220201X	TR CHIP NPN KRC107	PC	1.00000	B	F0900	05	1
	Q906	J2041220201X	TR CHIP NPN KRC107	PC	1.00000	B	F0900	05	1
	R901	J3024101120X	RES CHIP 100 1/10W	PC	1.00000	B	F4699		1
	R902	J3024103120X	RES CHIP 10K 1/10W	PC	1.00000	B	F4699		1
	R907	J3024223120X	RES CHIP 22K 1/10W	PC	1.00000	B	F4699		1
	R908	J3024473120X	RES CHIP 47K 1/10W	PC	1.00000	B	F0800	04	1
	R909	J3024181120X	RES CHIP 180 1/10W	PC	1.00000	B	F1400	07	1
	R910	J3024681120X	RES CHIP 680 1/10W	PC	1.00000	B	F4899	03	1
	R911	J3024562120X	RES CHIP 5K6 1/10W	PC	1.00000	B	F4699	03	1
	R912	J3024153120X	RES CHIP 15K 1/10W	PC	1.00000	B	F4699	03	1
	R915	J3024181120X	RES CHIP 180 1/10W	PC	1.00000	B	F0900	05	1
	R916	J3024681120X	RES CHIP 680 1/10W	PC	1.00000	B	F4899	03	1
	R917	J3024184120X	R-CHIP 180K 2012J	PC	1.00000	B	F4699		1
	R919L	J3024102120X	RES CHIP 1K 1/10W	PC	1.00000	B	F4699		1
	R919R	J3024102120X	RES CHIP 1K 1/10W	PC	1.00000	B	F4699		1
	R920L	J3024473120X	RES CHIP 47K 1/10W	PC	1.00000	B	F4699		1
	R920R	J3024473120X	RES CHIP 47K 1/10W	PC	1.00000	B	F4699		1
	R921	J3024562120X	RES CHIP 5K6 1/10W	PC	1.00000	B	F4699	03	1
	R922	J3024153120X	RES CHIP 15K 1/10W	PC	1.00000	B	F4699	03	1
	R924L	J3024272120X	RES CHIP 2K7 1/10W	PC	1.00000	B	F4699		1
	R924R	J3024272120X	RES CHIP 2K7 1/10W	PC	1.00000	B	F4699		1
	R925L	J3024332120X	RES CHIP 3K3 1/10W	PC	1.00000	B	F4899	01	1

	R925R	J3024332120X	RES CHIP 3K3 1/10W	PC	1.00000	B	F4899	01	1
	R926L	J3024750120X	RES CHIP 75 1/10W	PC	1.00000	B	F4899	01	1
	R926R	J3024750120X	RES CHIP 75 1/10W	PC	1.00000	B	F4899	01	1
	R927	J3024100120X	R-CHIP 10 2012J	PC	1.00000	B	F4699		1
	R928	J3024100120X	R-CHIP 10 2012J	PC	1.00000	B	F4699		1
	R931	J3024562120X	RES CHIP 5K6 1/10W	PC	1.00000	B	F4699	03	1
	R932	J3024153120X	RES CHIP 15K 1/10W	PC	1.00000	B	F4699	03	1
	R934	J3024000120X	RES 0 OHM 1/10W J	PC	1.00000	B	F4699	03	1
	R938	J3024103120X	RES CHIP 10K 1/10W	PC	1.00000	B	F4699		1
	R939	J3024103120X	RES CHIP 10K 1/10W	PC	1.00000	B	F4699		1
	R940	J3024103120X	RES CHIP 10K 1/10W	PC	1.00000	B	F4699		1
	R942	J3024103120X	RES CHIP 10K 1/10W	PC	1.00000	B	F4699		1
	R943	J3024473120X	RES CHIP 47K 1/10W	PC	1.00000	B	F4699		1
	R944	J3024332120X	RES CHIP 3K3 1/10W	PC	1.00000	B	F4699	03	1
	R945	J3024102120X	RES CHIP 1K 1/10W	PC	1.00000	B	F4699	03	1
	R946	J3024332120X	RES CHIP 3K3 1/10W	PC	1.00000	B	F4699	03	1
	R947	J3024102120X	RES CHIP 1K 1/10W	PC	1.00000	B	F4699	03	1
	R949	J3024000120X	RES 0 OHM 1/10W J	PC	1.00000	B	F4699		1
	R950	J3024332120X	RES CHIP 3K3 1/10W	PC	1.00000	B	F1200	06	1
	R951	J3024181120X	RES CHIP 180 1/10W	PC	1.00000	B	F4699	03	1
	R952	J3024181120X	RES CHIP 180 1/10W	PC	1.00000	B	F4699	03	1
	R953	J3024181120X	RES CHIP 180 1/10W	PC	1.00000	B	F4699	03	1
	R954	J3024181120X	RES CHIP 180 1/10W	PC	1.00000	B	F4699	03	1
	R955	J3024181120X	RES CHIP 180 1/10W	PC	1.00000	B	F4699	03	1
	R956	J3024181120X	RES CHIP 180 1/10W	PC	1.00000	B	F4699	03	1
	R967	J3024181120X	RES CHIP 180 1/10W	PC	1.00000	B	F4899	03	1
	R968	J3024181120X	RES CHIP 180 1/10W	PC	1.00000	B	F4899	03	1
	R969	J3024181120X	RES CHIP 180 1/10W	PC	1.00000	B	F4899	03	1
	R970	J3024181120X	RES CHIP 180 1/10W	PC	1.00000	B	F4899	03	1
	R971	J3024181120X	RES CHIP 180 1/10W	PC	1.00000	B	F4899	03	1
	R972	J3024181120X	RES CHIP 180 1/10W	PC	1.00000	B	F4899	03	1
	R973	J3024181120X	RES CHIP 180 1/10W	PC	1.00000	B	F4899	03	1
	R980	J3024332120X	RES CHIP 3K3 1/10W	PC	1.00000	B	F1200	06	1
	R981	J3024822120X	R-CHIP 8K2 1/10W J	PC	1.00000	B	F4699	03	1
	R982	J3024203120X	RES CHIP 20K 1/10W	PC	1.00000	B	F4699	03	1
	R984	J3024271120X	R-CHIP 270 1/10W J	PC	1.00000	B	F4699	03	1
	R985	J3024103120X	RES CHIP 10K 1/10W	PC	1.00000	B	F1700	08	1
	R986	J3024391120X	R-CHIP 390 2012J	PC	1.00000	B	F4899	03	1
	R987	J3024473120X	RES CHIP 47K 1/10W	PC	1.00000	B	F4899	03	1

PL DWG NO.: JE990140
PL TITLE : 1DVD OUTBD APP
ISSUE DATE: 11-13-99
ISSUED BY : KK HO
* = CRITICAL ITEM

PAGE: 1
REV NO: 08
REVISE DATE: 09-22-00
PRINT DATE: 03-28-01
< GROUP NO. / QUANTITY >

								PL REV	01 EA
E	ITEM	DRAWING NO.	PART NAME/TEXT	UM	QTYFAC	MB	TMING		
	#001	JE99014001EA	DVD1.0 OUTBD APP	PC			F4699	04	A
E	'020	JE99014201EA	DVD1.0 OUTBD SMT	PC	1.00000	M	F4699	04	1
	'021	J4030100020A	PCB OUTBD 275*200	PC	1.00000	B	F1700	06	1
	'033	J2021220102X	TR NPN DTC114YSA	PC	1.00000	B	F1700	06	1
	C801L	J3470947030X	CE 47U 16V	PC	1.00000	B	F0800	02	1
	C801L	J3470947030X	CE 47U 16V	PC	1.00000	B	F0800	02	1
	C806L	J3470947030X	CE 47U 16V	PC	1.00000	B	F0800	02	1
	C806R	J3470947030X	CE 47U 16V	PC	1.00000	B	F0800	02	1
	C810	J3470147031X	CE SG 47U 16V M	PC	1.00000	B	F4899	01	1
	C812	J3470147031X	CE SG 47U 16V M	PC	1.00000	B	F4699		1
	C815	J3470147031X	CE SG 47U 16V M	PC	1.00000	B	F4699		1
	C816	J3470147031X	CE SG 47U 16V M	PC	1.00000	B	F4699		1
	C817	J3470147031X	CE SG 47U 16V M	PC	1.00000	B	F4699		1
	C818	J3470147031X	CE SG 47U 16V M	PC	1.00000	B	F4699		1

	C822	J3470133121X	CE 330UF 10V M	PC	1.00000	B	F2500	07	1
	C823	J3470147131X	CE 470U 16V 8*11.5	PC	1.00000	B	F4699		1
	C824	J3470110971X	CE SG 1U 50V M	PC	1.00000	B	F4699	04	1
	C825	J3470110971X	CE SG 1U 50V M	PC	1.00000	B	F4699	04	1
	C827	J3470147031X	CE SG 47U 16V M	PC	1.00000	B	F4699	04	1
	C832	J3470147031X	CE SG 47U 16V M	PC	1.00000	B	F4699		1
	C834	J3470147131X	CE 470U 16V 8*11.5	PC	1.00000	B	F4699		1
	C835	J3470147131X	CE 470U 16V 8*11.5	PC	1.00000	B	F4699		1
	C842	J3470110131X	CE SG 100U 16V M	PC	1.00000	B	F4699	04	1
	C846	J3470147031X	CE SG 47U 16V M	PC	1.00000	B	F4699		1
	C847	J3470110121X	CE SG 100U 10V M	PC	1.00000	B	F0900	03	1
	C849	J3470110971X	CE SG 1U 50V M	PC	1.00000	B	F4699		1
	C850	J3470110971X	CE SG 1U 50V M	PC	1.00000	B	F4699		1
	C851	J3470110071X	CE SG 10U 50V M	PC	1.00000	B	F4699		1
	C852	J3470110071X	CE SG 10U 50V M	PC	1.00000	B	F4699		1
	C854	J3470147031X	CE SG 47U 16V M	PC	1.00000	B	F4699		1
	C855	J3470110071X	CE SG 10U 50V M	PC	1.00000	B	F4699		1
	C863	J3470110131X	CE SG 100U 16V M	PC	1.00000	B	F0900	03	1
	C864	J3470110131X	CE SG 100U 16V M	PC	1.00000	B	F0900	03	1
	C866	J3470147031X	CE SG 47U 16V M	PC	1.00000	B	F0900	03	1
	C891N	J3470947030X	CE 47U 16V	PC	1.00000	B	F0800	02	1
	C891P	J3470947030X	CE 47U 16V	PC	1.00000	B	F0800	02	1
	L806	J3927001001X	EMI FILTER TU20MT	PC	1.00000	B	F0800	02	1
	L807	J3927001001X	EMI FILTER TU20MT	PC	1.00000	B	F0800	02	1
	L808	J3927001001X	EMI FILTER TU20MT	PC	1.00000	B	F0800	02	1
	L809	J3927001001X	EMI FILTER TU20MT	PC	1.00000	B	F0800	02	1

PL DWG NO.: JE990142
PL TITLE : 1DVD OUTBD SMT
ISSUE DATE: 11-13-99
ISSUED BY : KK HO
* = CRITICAL ITEM

PAGE: 1
REV NO: 11
REVISE DATE: 02-21-01
PRINT DATE: 03-28-01
< GROUP NO. / QUANTITY >

								PL	01
E	ITEM	DRAWING NO.	PART NAME/TEXT	UM	QTYFAC	MB	TMING	REV	EA
	#001	JE99014201EA	DVD1.0 OUTBD SMT	PC			F4699	05	A
	'050	J2041020201X	TR KTC3875S SOT23	PC	1.00000	B	F2500	08	1
	'080	J3024101120X	RES CHIP 100 1/10W	PC	1.00000	B	F2500	08	1
	'090	J3024751120X	R-CHIP 750 2012J	PC	1.00000	B	F2500	08	1
	C802N	J3525821170X	CAP CC 820P 50V 20	PC	1.00000	B	F0800	03	1
	C802P	J3525821170X	CAP CC 820P 50V 20	PC	1.00000	B	F0800	03	1
	C803N	J3525821170X	CAP CC 820P 50V 20	PC	1.00000	B	F0800	03	1
	C803P	J3525821170X	CAP CC 820P 50V 20	PC	1.00000	B	F0800	03	1
	C804L	J3525821170X	CAP CC 820P 50V 20	PC	1.00000	B	F0800	03	1
	C804R	J3525821170X	CAP CC 820P 50V 20	PC	1.00000	B	F0800	03	1
	C805L	J3525821170X	CAP CC 820P 50V 20	PC	1.00000	B	F0800	03	1
	C805R	J3525821170X	CAP CC 820P 50V 20	PC	1.00000	B	F0800	03	1
	C807	J3525104540X	CC/CHIP 0.1U 25V Z	PC	1.00000	B	F4699		1
	C808	J3525104540X	CC/CHIP 0.1U 25V Z	PC	1.00000	B	F4699		1
	C809	J3525104540X	CC/CHIP 0.1U 25V Z	PC	1.00000	B	F4699		1
	C811	J3525104540X	CC/CHIP 0.1U 25V Z	PC	1.00000	B	F4699		1
	C813	J3525104540X	CC/CHIP 0.1U 25V Z	PC	1.00000	B	F4699		1
	C814	J3525104540X	CC/CHIP 0.1U 25V Z	PC	1.00000	B	F4699		1
	C819	J3515101270X	CC/CHIP 100P 50V J	PC	1.00000	B	F4699		1
	C820	J3515101270X	CC/CHIP 100P 50V J	PC	1.00000	B	F4699		1
	C821	J3515101270X	CC/CHIP 100P 50V J	PC	1.00000	B	F4699		1
	C826	J3525104504X	CAP CC 0.1U 25V 20	PC	1.00000	B	F0800	05	1
	C828	J3525104540X	CC/CHIP 0.1U 25V Z	PC	1.00000	B	F4899	01	1
	C829	J3024000120X	RES 0 OHM 1/10W J	PC	1.00000	B	F2500	08	1
	C830	J3515680270X	CC/CHIP 68P 2012	PC	1.00000	B	F2500	08	1
	C833	J3525104540X	CC/CHIP 0.1U 25V Z	PC	1.00000	B	F4699		1
	C836	J3525104540X	CC/CHIP 0.1U 25V Z	PC	1.00000	B	F4699		1

	C837	J3525104540X	CC/CHIP 0.1U 25V Z	PC	1.00000	B	F4699		1
	C838	J3525104540X	CC/CHIP 0.1U 25V Z	PC	1.00000	B	F4699		1
	C839	J3525104540X	CC/CHIP 0.1U 25V Z	PC	1.00000	B	F4699		1
	C840	J3525104540X	CC/CHIP 0.1U 25V Z	PC	1.00000	B	F4699		1
	C841	J3525104540X	CC/CHIP 0.1U 25V Z	PC	1.00000	B	F4699		1
	C843	J3525103170X	CC/CHIP .01U 50V K	PC	1.00000	B	F4699		1
	C844	J3525103170X	CC/CHIP .01U 50V K	PC	1.00000	B	F4699		1
	C845	J3525103170X	CC/CHIP .01U 50V K	PC	1.00000	B	F4699		1
	C848L	J3515101170X	CC 100PF 50V 2012	PC	1.00000	B	F0800	03	1
	C848R	J3515101170X	CC 100PF 50V 2012	PC	1.00000	B	F0800	03	1
	C853	J3525104540X	CC/CHIP 0.1U 25V Z	PC	1.00000	B	F4699		1
	C856	J3515221170X	CC/CHIP 220P 50V J	PC	1.00000	B	F2500	08	1
	C859	J3525104540X	CC/CHIP 0.1U 25V Z	PC	1.00000	B	F4699		1
	C860	J3515101270X	CC/CHIP 100P 50V J	PC	1.00000	B	F4699		1
	C861	J3515101270X	CC/CHIP 100P 50V J	PC	1.00000	B	F4699		1
	C865	J3525104540X	CC/CHIP 0.1U 25V Z	PC	1.00000	B	F4699		1
	C892N	J3525821170X	CAP CC 820P 50V 20	PC	1.00000	B	F0800	03	1
	C892P	J3525821170X	CAP CC 820P 50V 20	PC	1.00000	B	F0800	03	1
	C893N	J3525821170X	CAP CC 820P 50V 20	PC	1.00000	B	F0800	03	1
	C893P	J3525821170X	CAP CC 820P 50V 20	PC	1.00000	B	F0800	03	1
	D801	J2242451514X	D-CHIP ZNR5V1B0.2W	PC	1.00000	B	F4699		1
	D802	J2242451514X	D-CHIP ZNR5V1B0.2W	PC	1.00000	B	F4699		1
	D803	J2242451514X	D-CHIP ZNR5V1B0.2W	PC	1.00000	B	F4699		1
	D804	J2242468514X	D-ZENER 0.2W 6.8V	PC	1.00000	B	F4699		1
	D805	J2242468514X	D-ZENER 0.2W 6.8V	PC	1.00000	B	F4699		1
	D806	J2242451514X	D-CHIP ZNR5V1B0.2W	PC	1.00000	B	F4699		1
	D807	J2242451514X	D-CHIP ZNR5V1B0.2W	PC	1.00000	B	F4699		1
	D808	J2242451514X	D-CHIP ZNR5V1B0.2W	PC	1.00000	B	F4699		1
	D809	J2244010104X	DIODE CHIP 1SS355	PC	1.00000	B	F2500	09	1
	D810	J2242451514X	D-CHIP ZNR5V1B0.2W	PC	1.00000	B	F4699		1
	D811	J2242451514X	D-CHIP ZNR5V1B0.2W	PC	1.00000	B	F4699		1
	D812	J2242451514X	D-CHIP ZNR5V1B0.2W	PC	1.00000	B	F4699		1
	D813	J2242451514X	D-CHIP ZNR5V1B0.2W	PC	1.00000	B	F4699		1
	D814	J2244010104X	DIODE CHIP 1SS355	PC	1.00000	B	F4699		1
	D815	J2244010104X	DIODE CHIP 1SS355	PC	1.00000	B	F4699		1
	D816	J2242451514X	D-CHIP ZNR5V1B0.2W	PC	1.00000	B	F4699		1
	D817	J2242451514X	D-CHIP ZNR5V1B0.2W	PC	1.00000	B	F4699		1
	D818	J2244010104X	DIODE CHIP 1SS355	PC	1.00000	B	F4699		1
	D819	J2244010104X	DIODE CHIP 1SS355	PC	1.00000	B	F2500	09	1
	IC801	J2110012003X	IC OP AMP NJM5532M	PC	1.00000	B	F1700	07	1
	IC802	J2110012003X	IC OP AMP NJM5532M	PC	1.00000	B	F1700	07	1
	IC803	J2110012003X	IC OP AMP NJM5532M	PC	1.00000	B	F1700	07	1
	IC807	J2115206008X	IC TC7WU04FU	PC	1.00000	B	F4699	05	1
	IC808	J2115206008X	IC TC7WU04FU	PC	1.00000	B	F4699		1
	J808	J3024000120X	RES 0 OHM 1/10W J	PC	1.00000	B	F4699		1
	J809	J3024000120X	RES 0 OHM 1/10W J	PC	1.00000	B	F4699		1
	J810	J3024000120X	RES 0 OHM 1/10W J	PC	1.00000	B	F4699		1
	J811	J3024000120X	RES 0 OHM 1/10W J	PC	1.00000	B	F4699		1
	J816	J3024000120X	RES 0 OHM 1/10W J	PC	1.00000	B	F4699	05	1
	L801	J3024000120X	RES 0 OHM 1/10W J	PC	1.00000	B	F4699		1
	L802	J3024000120X	RES 0 OHM 1/10W J	PC	1.00000	B	F4699		1
	L803	J3024000120X	RES 0 OHM 1/10W J	PC	1.00000	B	F4699		1
	L804	J3024000120X	RES 0 OHM 1/10W J	PC	1.00000	B	F4699		1
	L805	J3024000120X	RES 0 OHM 1/10W J	PC	1.00000	B	F4699		1
	L811	J2631300011X	BEAD 120XOHM	PC	1.00000	B	F4699		1
	L814	J2611022011X	COIL CHIP ELJFC220	PC	1.00000	B	F4699		1
	L815	J2611022011X	COIL CHIP ELJFC220	PC	1.00000	B	F4699		1
	L816	J2611022011X	COIL CHIP ELJFC220	PC	1.00000	B	F4699	05	1
	L817	J2611022011X	COIL CHIP ELJFC220	PC	1.00000	B	F4699		1
	L818	J3024000120X	RES 0 OHM 1/10W J	PC	1.00000	B	F4899	01	1
	L819	J2611022011X	COIL CHIP ELJFC220	PC	1.00000	B	F4699		1
	L820	J3024000120X	RES 0 OHM 1/10W J	PC	1.00000	B	F4699		1
	Q801L	J2041220302X	TR DTC323TK SMT3	PC	1.00000	B	F0800	03	1

	Q801R	J2041220302X	TR DTC323TK SMT3	PC	1.00000	B	F0800	03	1
	Q802	J2041200101X	TR PNP KRA107S	PC	1.00000	B	F0800	03	1
	Q803	J2041200101X	TR PNP KRA107S	PC	1.00000	B	F0800	03	1
	Q804	J2041220201X	TR CHIP NPN KRC107	PC	1.00000	B	F0800	03	1
	Q805	J2041220201X	TR CHIP NPN KRC107	PC	1.00000	B	F2500	09	1
	Q806	J2041020201X	TR KTC3875S SOT23	PC	1.00000	B	F4699		1
	Q807	J2041220201X	TR CHIP NPN KRC107	PC	1.00000	B	F0800	03	1
	Q808	J2041000301X	TR KTA1504S SOT23	PC	1.00000	B	F4699		1
	Q809	J2041220201X	TR CHIP NPN KRC107	PC	1.00000	B	F0800	03	1
	Q810	J2041220302X	TR DTC323TK SMT3	PC	1.00000	B	F0800	03	1
	Q811	J2041220201X	TR CHIP NPN KRC107	PC	1.00000	B	F0800	03	1
	Q812	J2041220201X	TR CHIP NPN KRC107	PC	1.00000	B	F0800	03	1
	Q813	J2041220302X	TR DTC323TK SMT3	PC	1.00000	B	F0800	03	1
	Q815	J2041020201X	TR KTC3875S SOT23	PC	1.00000	B	F2500	09	1
	R001	J3024680120X	R-CHIP 68 1/10W J	PC	1.00000	B	F0900	04	1
	R801	J3024100120X	R-CHIP 10 2012J	PC	1.00000	B	F0801	11	1
	R801N	J3024473120X	RES CHIP 47K 1/10W	PC	1.00000	B	F4899	01	1
	R801P	J3024473120X	RES CHIP 47K 1/10W	PC	1.00000	B	F4899	01	1
	R802N	J3024342175X	RES 3K4 1/10 1% F	PC	1.00000	B	F0800	03	1
	R802P	J3024342175X	RES 3K4 1/10 1% F	PC	1.00000	B	F0800	03	1
	R803N	J3024342175X	RES 3K4 1/10 1% F	PC	1.00000	B	F0800	03	1
	R803P	J3024342175X	RES 3K4 1/10 1% F	PC	1.00000	B	F0800	03	1
	R804N	J3024392120X	RES CHIP 3K9 1/10W	PC	1.00000	B	F4899	01	1
	R804P	J3024392120X	RES CHIP 3K9 1/10W	PC	1.00000	B	F4899	01	1
	R805N	J3024272120X	RES CHIP 2K7 1/10W	PC	1.00000	B	F0800	03	1
	R805P	J3024272120X	RES CHIP 2K7 1/10W	PC	1.00000	B	F0800	03	1
	R806	J3024223120X	RES CHIP 22K 1/10W	PC	1.00000	B	F4899	01	1
	R807N	J3024122120X	RES CHIP 1K2 1/10W	PC	1.00000	B	F0800	03	1
	R807P	J3024122120X	RES CHIP 1K2 1/10W	PC	1.00000	B	F0800	03	1
	R808L	J3024911120X	RES CHIP 910 1/10W	PC	1.00000	B	F0800	03	1
	R808R	J3024911120X	RES CHIP 910 1/10W	PC	1.00000	B	F0800	03	1
	R809L	J3024911120X	RES CHIP 910 1/10W	PC	1.00000	B	F0800	03	1
	R809R	J3024911120X	RES CHIP 910 1/10W	PC	1.00000	B	F0800	03	1
	R810L	J3024473120X	RES CHIP 47K 1/10W	PC	1.00000	B	F4699		1
	R810R	J3024473120X	RES CHIP 47K 1/10W	PC	1.00000	B	F4699		1
	R811L	J3024000120X	RES 0 OHM 1/10W J	PC	1.00000	B	F0900	04	1
	R811R	J3024000120X	RES 0 OHM 1/10W J	PC	1.00000	B	F0900	04	1
	R812L	J3024102120X	RES CHIP 1K 1/10W	PC	1.00000	B	F0800	03	1
	R812R	J3024102120X	RES CHIP 1K 1/10W	PC	1.00000	B	F0800	03	1
	R813	J3024224120X	RES CHIP 220K 1/10	PC	1.00000	B	F4699		1
	R814	J3024224120X	RES CHIP 220K 1/10	PC	1.00000	B	F4699		1
	R815	J3024331120X	R-CHIP 330 2012J	PC	1.00000	B	F4899	01	1
	R816	J3024331120X	R-CHIP 330 2012J	PC	1.00000	B	F4899	01	1
	R817	J3024390120X	RES 39R 1/10 J	PC	1.00000	B	F4699		1
	R818	J3024390120X	RES 39R 1/10 J	PC	1.00000	B	F4699		1
	R819	J3024390120X	RES 39R 1/10 J	PC	1.00000	B	F4699		1
	R820	J3024390120X	RES 39R 1/10 J	PC	1.00000	B	F4699		1
	R821	J3024390120X	RES 39R 1/10 J	PC	1.00000	B	F4699		1
	R822	J3024390120X	RES 39R 1/10 J	PC	1.00000	B	F4699		1
	R824	J3024339120X	RES CHIP 3R3 1/10	PC	1.00000	B	F0900	04	1
	R825	J3024331120X	R-CHIP 330 2012J	PC	1.00000	B	F4899	01	1
	R826	J3024101120X	RES CHIP 100 1/10W	PC	1.00000	B	F4599		1
	R827	J3024224120X	RES CHIP 220K 1/10	PC	1.00000	B	F4699	05	1
	R828	J3024224120X	RES CHIP 220K 1/10	PC	1.00000	B	F4699	05	1
	R829	J3024103120X	RES CHIP 10K 1/10W	PC	1.00000	B	F4699	05	1
	R830	J3024470120X	RES CHIP 47 1/10W	PC	1.00000	B	F0900	04	1
	R831	J3024390120X	RES 39R 1/10 J	PC	1.00000	B	F4699		1
	R832	J3024390120X	RES 39R 1/10 J	PC	1.00000	B	F4699		1
	R833	J3024390120X	RES 39R 1/10 J	PC	1.00000	B	F4699		1
	R834	J3024103120X	RES CHIP 10K 1/10W	PC	1.00000	B	F4699	05	1
	R835	J3024101120X	RES CHIP 100 1/10W	PC	1.00000	B	F4899	01	1
	R836	J3024822120X	R-CHIP 8K2 1/10W J	PC	1.00000	B	F1700	07	1
	R837	J3024101120X	RES CHIP 100 1/10W	PC	1.00000	B	F4899	01	1

	R838	J3024122120X	RES CHIP 1K2 1/10W	PC	1.00000	B	F0801	11	1
	R839	J3024750120X	RES CHIP 75 1/10W	PC	1.00000	B	F4699	05	1
	R840	J3024102120X	RES CHIP 1K 1/10W	PC	1.00000	B	F4699		1
	R841	J3024102120X	RES CHIP 1K 1/10W	PC	1.00000	B	F4699		1
	R842	J3024102120X	RES CHIP 1K 1/10W	PC	1.00000	B	F4699		1
	R843	J3024473120X	RES CHIP 47K 1/10W	PC	1.00000	B	F4699		1
	R844	J3024473120X	RES CHIP 47K 1/10W	PC	1.00000	B	F4699		1
	R845	J3024911120X	RES CHIP 910 1/10W	PC	1.00000	B	F0801	11	1
	R846	J3024222120X	RES CHIP 2K2 1/10W	PC	1.00000	B	F4699		1
	R847	J3024101120X	RES CHIP 100 1/10W	PC	1.00000	B	F2500	09	1
	R848	J3024100120X	R-CHIP 10 2012J	PC	1.00000	B	F4699		1
	R849	J3024100120X	R-CHIP 10 2012J	PC	1.00000	B	F4699		1
	R850	J3024123120X	RES CHIP 12K 1/10W	PC	1.00000	B	F4699		1
	R851	J3024221120X	R-CHIP 220 2012J	PC	1.00000	B	F2500	09	1
	R852	J3024102120X	RES CHIP 1K 1/10W	PC	1.00000	B	F0800	03	1
	R853	J3024181120X	RES CHIP 180 1/10W	PC	1.00000	B	F0800	05	1
	R854	J3024221120X	R-CHIP 220 2012J	PC	1.00000	B	F4899	05	1
	R856	J3024101120X	RES CHIP 100 1/10W	PC	1.00000	B	F4599	05	1
	R857	J3024101120X	RES CHIP 100 1/10W	PC	1.00000	B	F4599		1
	R858	J3024100120X	R-CHIP 10 2012J	PC	1.00000	B	F4699	05	1
	R859	J3024101120X	RES CHIP 100 1/10W	PC	1.00000	B	F4599		1
	R860	J3024271120X	R-CHIP 270 1/10W J	PC	1.00000	B	F2500	08	1
	R861	J3024100120X	R-CHIP 10 2012J	PC	1.00000	B	F4699		1
	R862	J3024000120X	RES 0 OHM 1/10W J	PC	1.00000	B	F2500	08	1
	R863	J3024751120X	R-CHIP 750 2012J	PC	1.00000	B	F2500	09	1
	R864	J3024331120X	R-CHIP 330 2012J	PC	1.00000	B	F2500	09	1
	R867	J3024470120X	RES CHIP 47 1/10W	PC	1.00000	B	F0900	04	1
	R868	J3024330120X	RES CHIP 33 1/10W	PC	1.00000	B	F0900	04	1
	R876N	J3024473120X	RES CHIP 47K 1/10W	PC	1.00000	B	F4899	01	1
	R876P	J3024473120X	RES CHIP 47K 1/10W	PC	1.00000	B	F4899	01	1
	R877N	J3024392120X	RES CHIP 3K9 1/10W	PC	1.00000	B	F4899	01	1
	R877P	J3024392120X	RES CHIP 3K9 1/10W	PC	1.00000	B	F4899	01	1
	R878N	J3024342175X	RES 3K4 1/10 1% F	PC	1.00000	B	F0800	03	1
	R878P	J3024342175X	RES 3K4 1/10 1% F	PC	1.00000	B	F0800	03	1
	R879N	J3024342175X	RES 3K4 1/10 1% F	PC	1.00000	B	F0800	03	1
	R879P	J3024342175X	RES 3K4 1/10 1% F	PC	1.00000	B	F0800	03	1
	R880N	J3024272120X	RES CHIP 2K7 1/10W	PC	1.00000	B	F0800	03	1
	R880P	J3024272120X	RES CHIP 2K7 1/10W	PC	1.00000	B	F0800	03	1
	R881N	J3024122120X	RES CHIP 1K2 1/10W	PC	1.00000	B	F0800	03	1
	R881P	J3024122120X	RES CHIP 1K2 1/10W	PC	1.00000	B	F0800	03	1

harman/kardon

H A Harman International Company
250 Crossways Park Drive, Woodbury, New York 11797
www.harmankardon.com
Harman Consumer International:
2, route de Tours, 72500 Château-du-Loir, France
© 1999 Harman Kardon, Incorporated
Part #0000-DVD1 OM