Block diagram

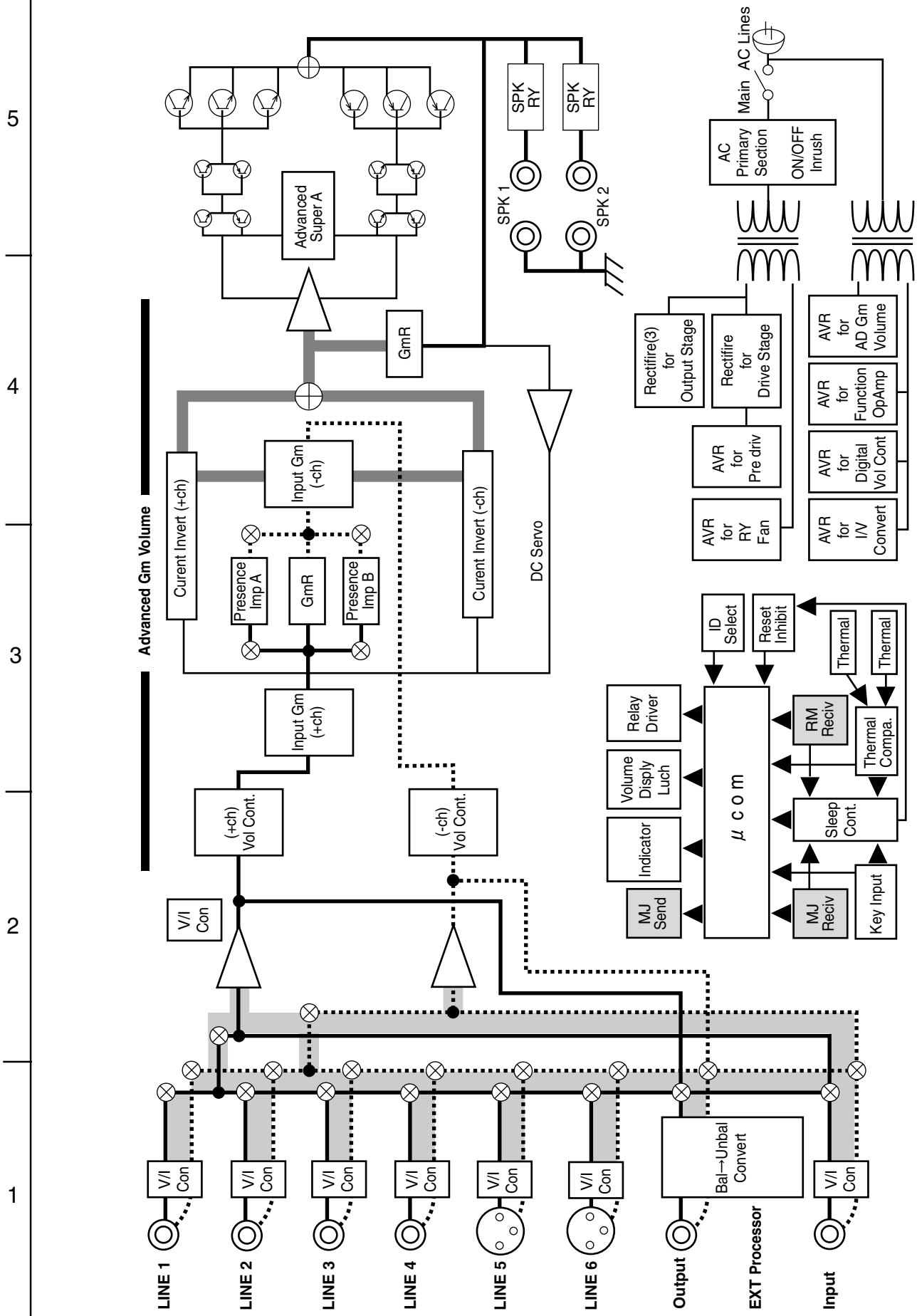

< MEMO >

Standard schematic diagrams

■ System control section

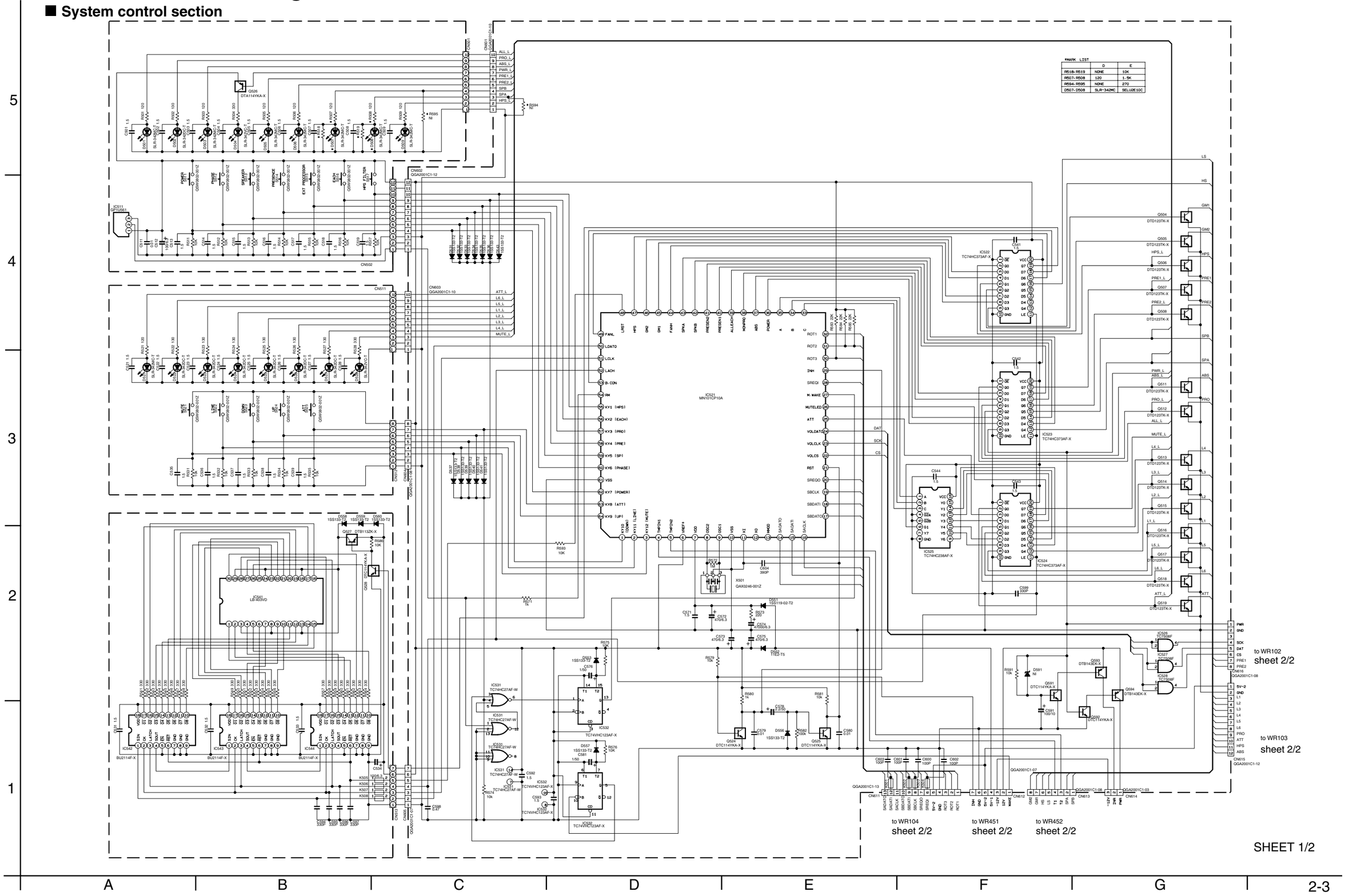

■ Main section (Premain AMP., Power supply)

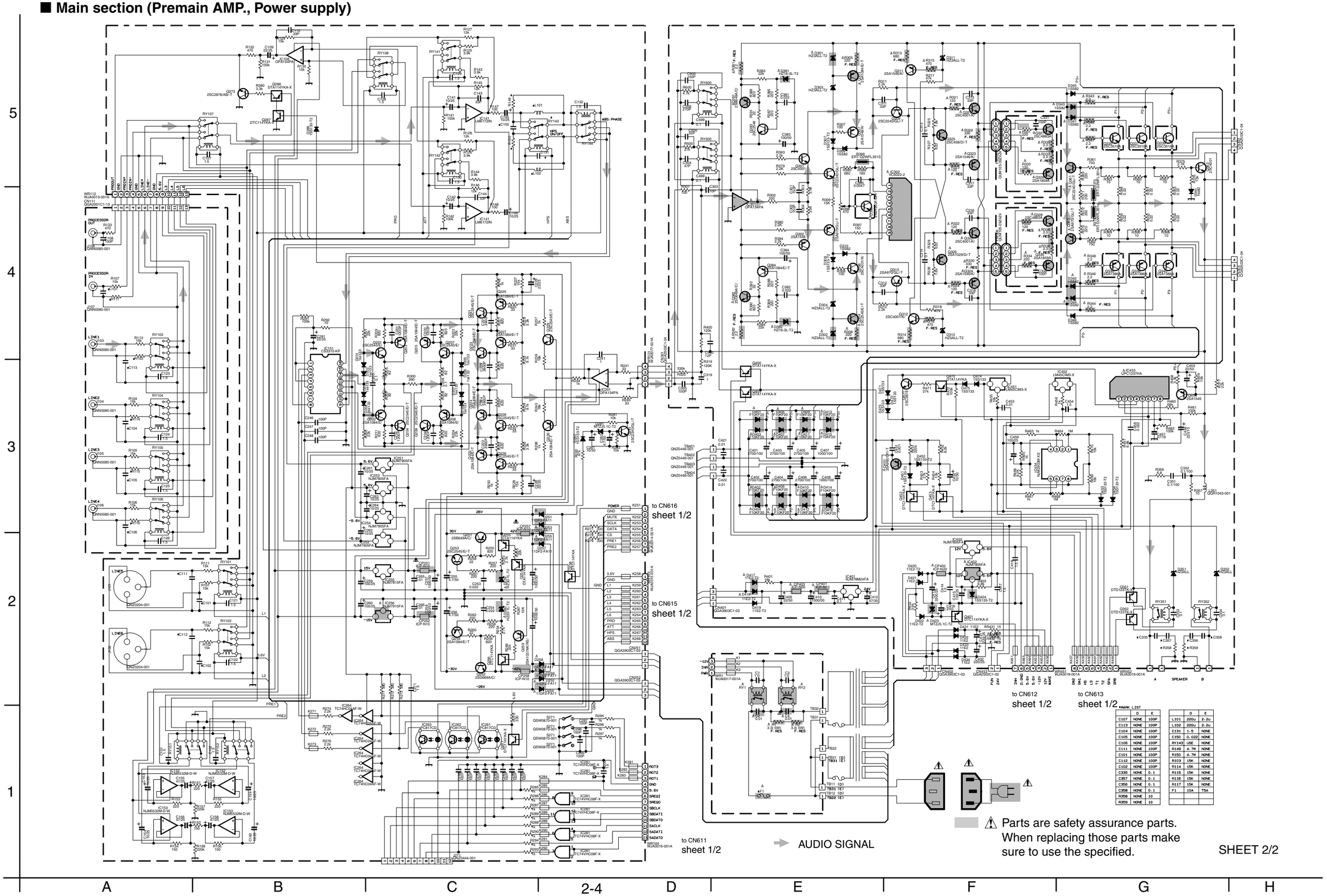

*MARK LIST	D	E		D	E
C107	NONE	100P	L101	220u	2- 2u
C113	NONE	100P	L102	220u	2- 2u
C104	NONE	100P	C131	1- 5	NONE
C105	NONE	100P	C150	0- 022	NONE
C106	NONE	100P	RY143	USE	NONE
C111	NONE	100P	R149	4- 7M	NONE
C101	NONE	100P	R150	4- 7M	NONE
C112	NONE	100P	R103	15K	NONE
C102	NONE	100P	R114	15K	NONE
C335	NONE	0- 1	R115	15K	NONE
C357	NONE	0- 1	R116	15K	NONE
C356	NONE	0- 1	R117	15K	NONE
C358	NONE	0- 1	F1	10A	T5A
R358	NONE	10			
R359	NONE	10			

Printed circuit boards

■ **Power AMP. board** (Reverse side)

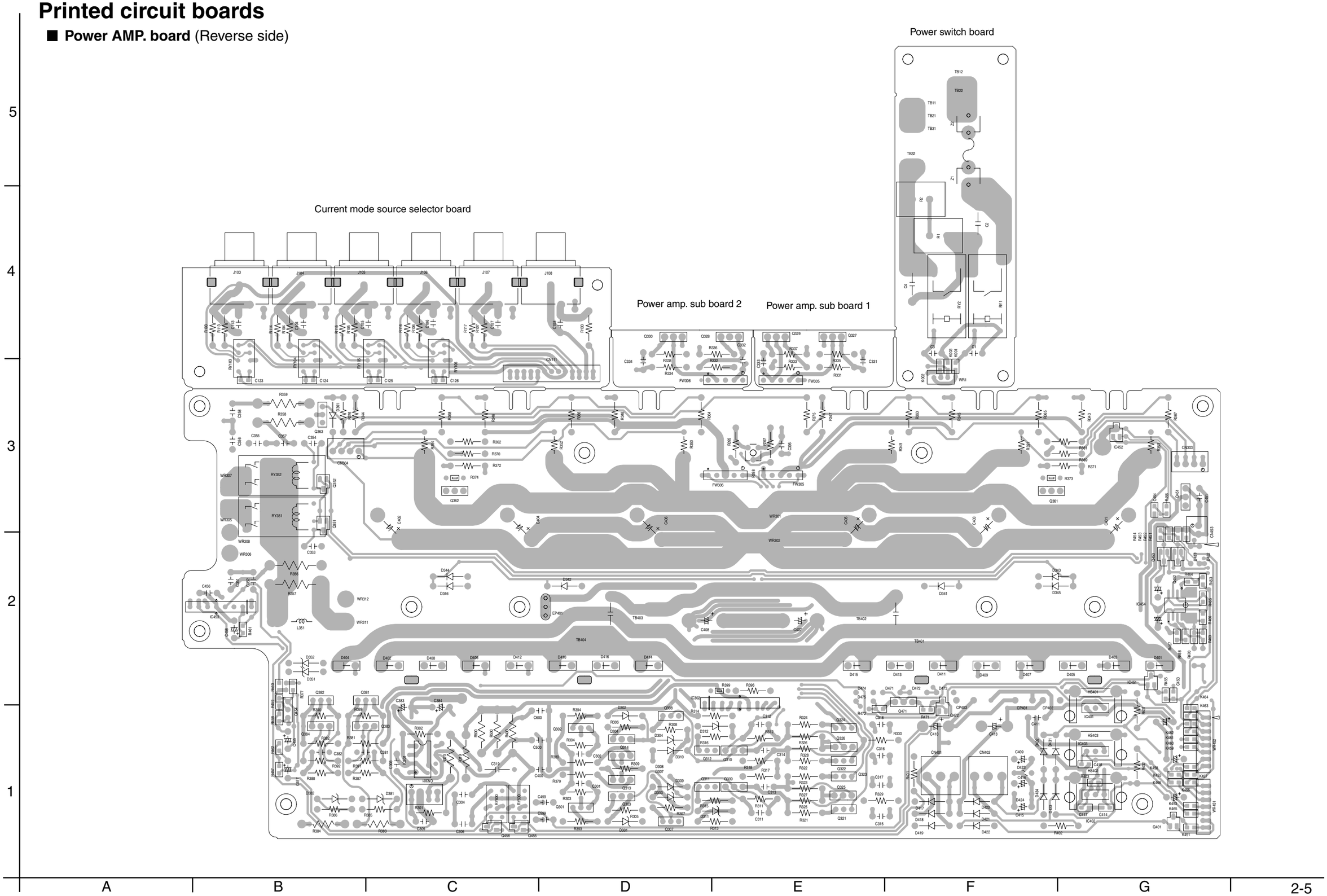

■ **Power AMP. board** (Forward side)

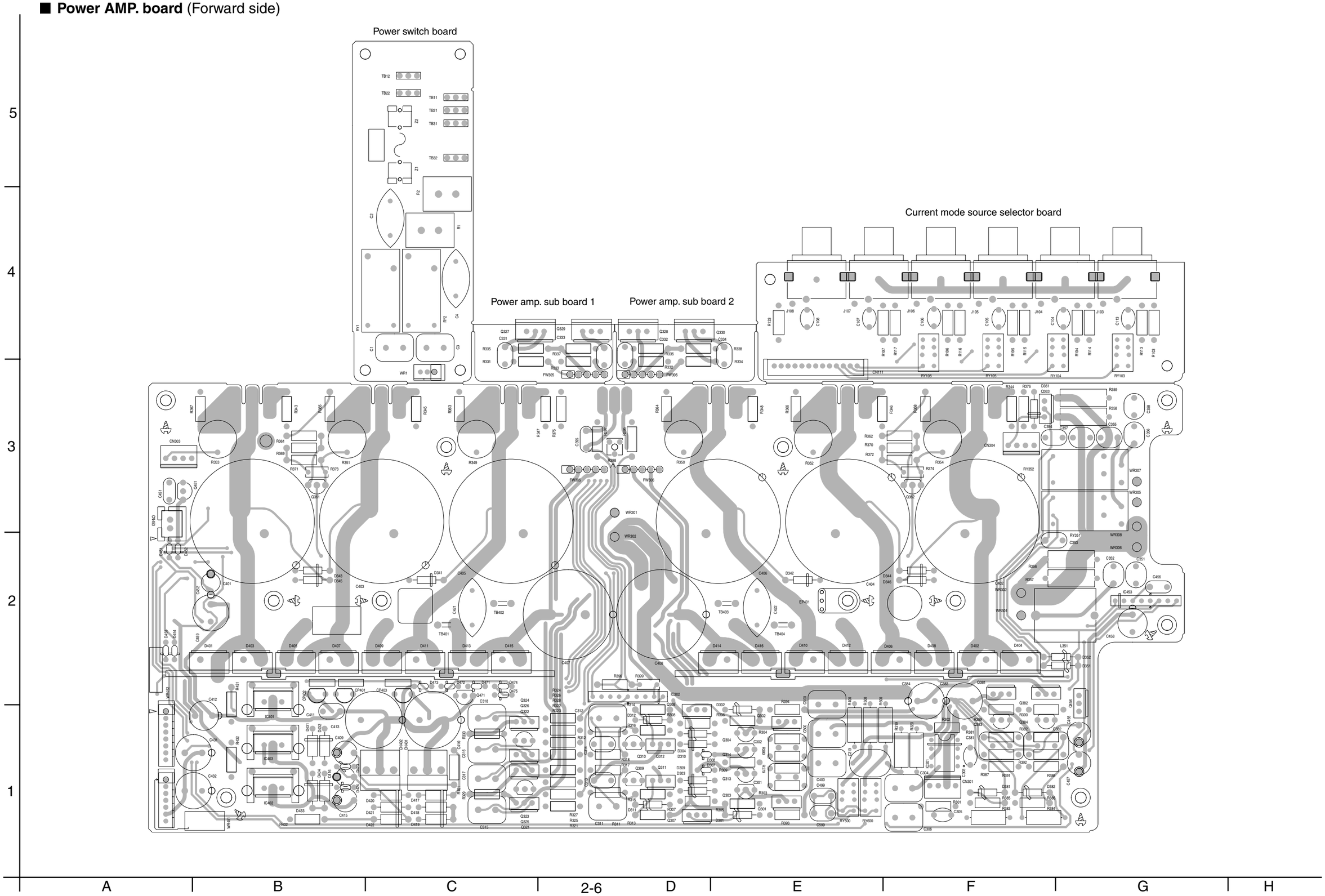

■ **Signal control board** (Reverse side)

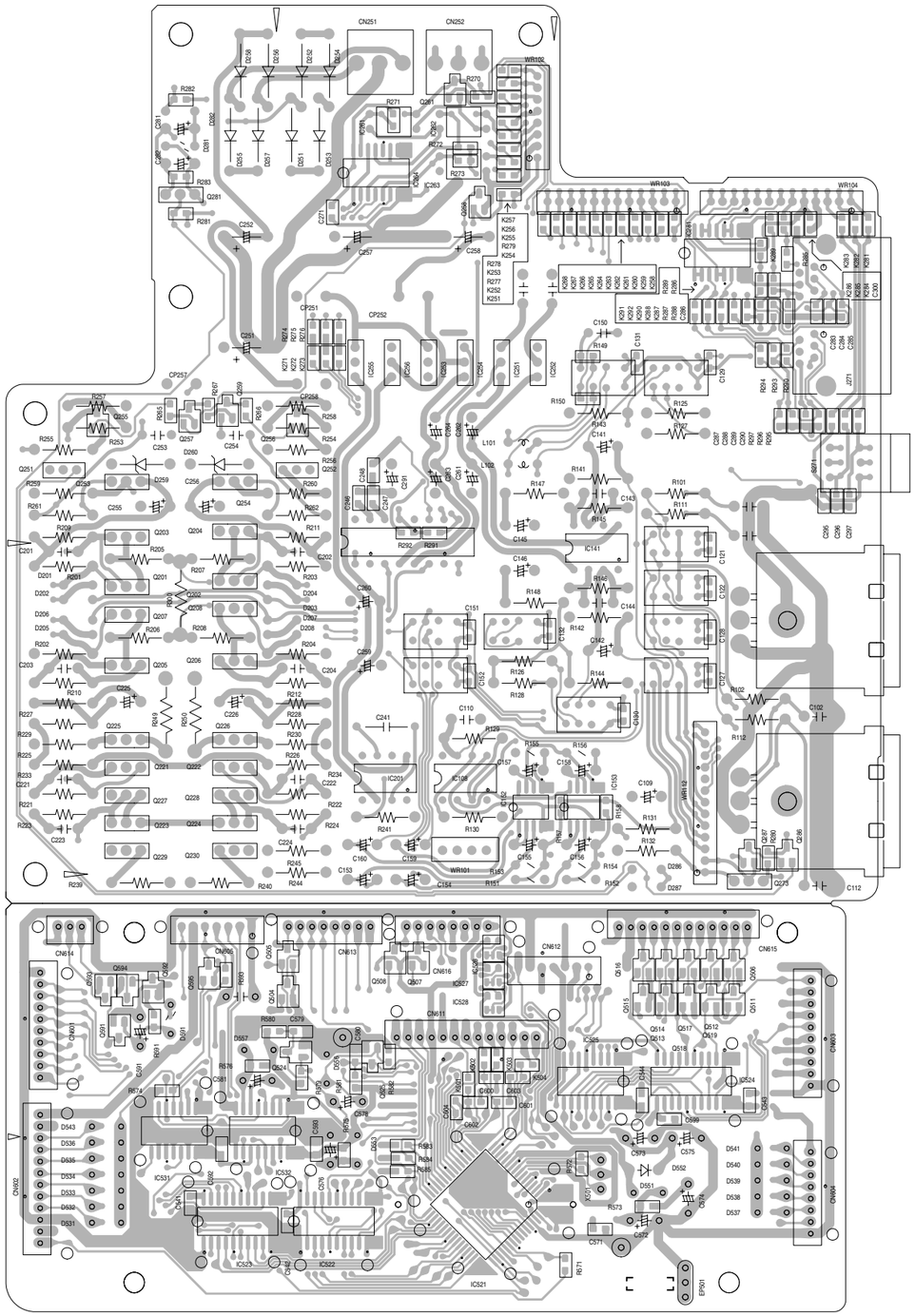

System control board

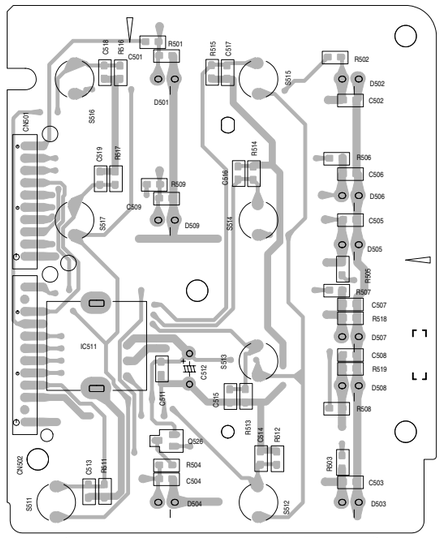

Operation switch board 1

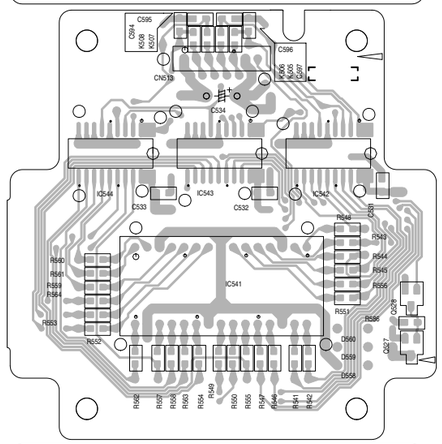

Display board

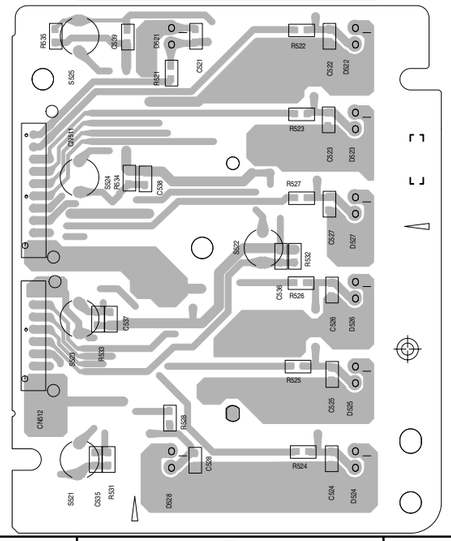

Operation switch board 2

■ **Signal control board** (Forward side)

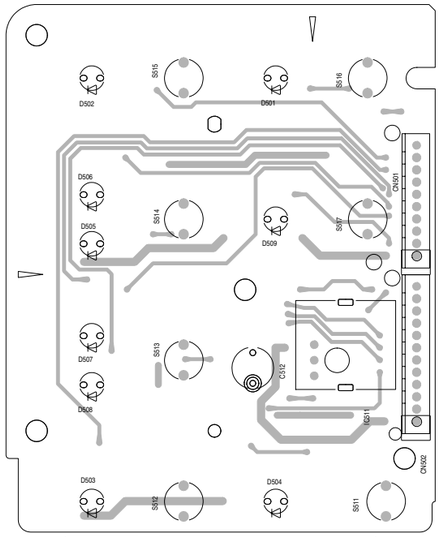

Operation switch board 1

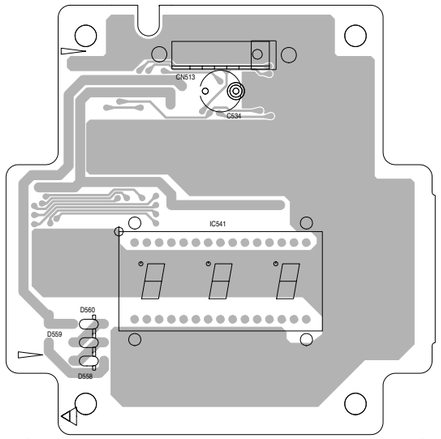

Display board

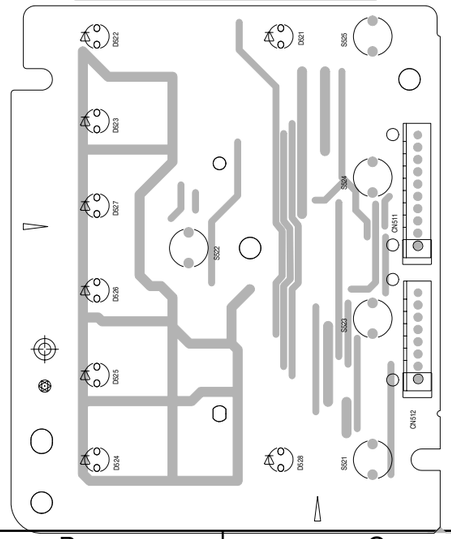

Operation switch board 2

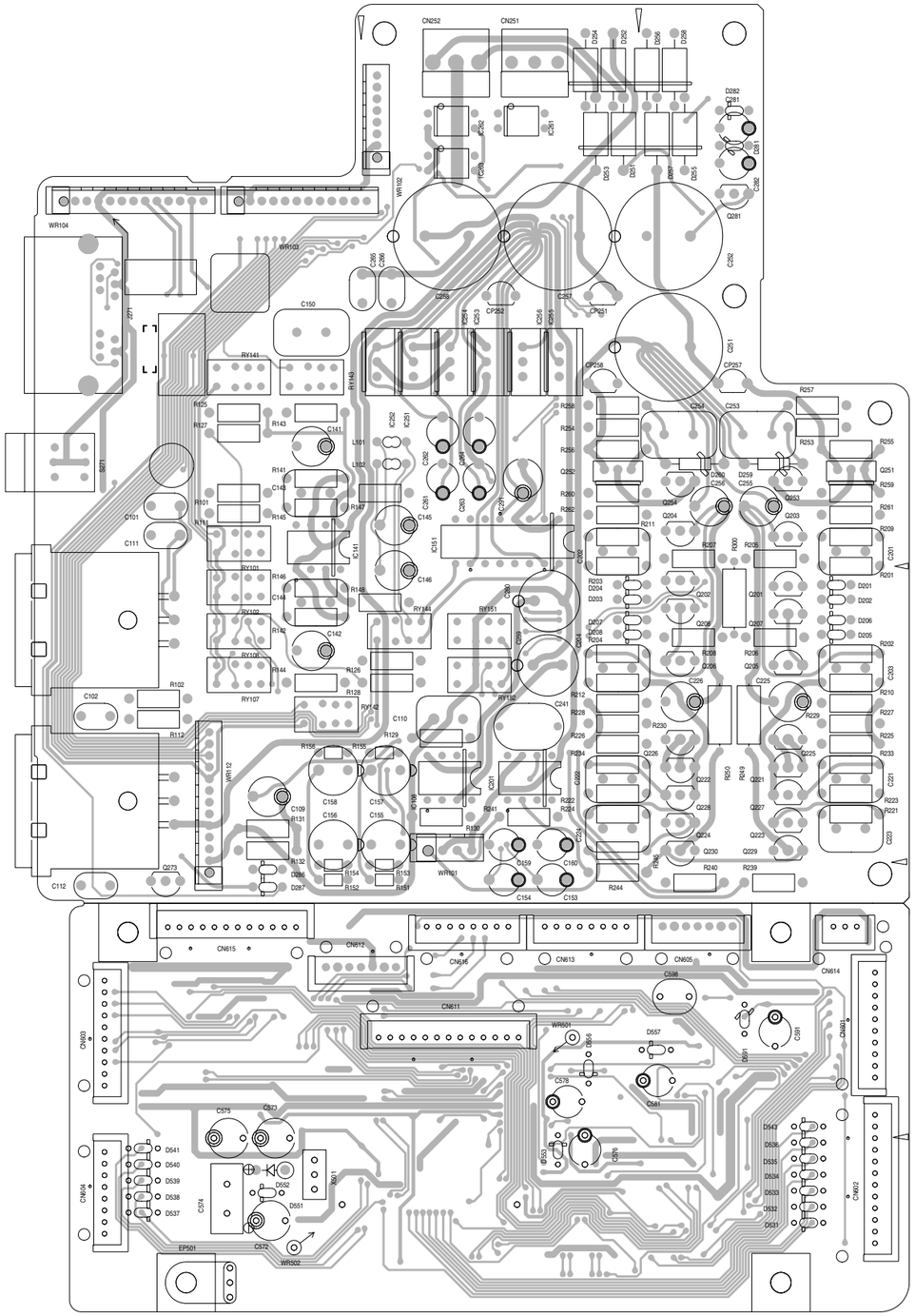

System control board