JVC

SERVICE MANUAL

COMPACT COMPONENT SYSTEM

DX-T9,DX-T7,DX-T5

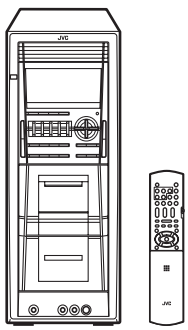

(CA DXT7,CA DXT9)

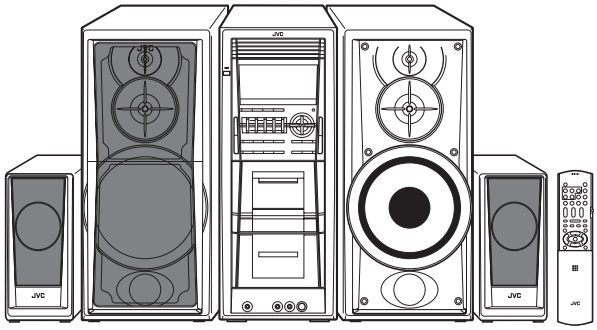

(SP XST5) (SP XT5) (CA DXT5) (SP XT5) (SP XST5)

DX-T9, DX-T7	
Area suffix	
A	Australia
US	Singapore
UW	Brazil,Mexico,Peru
UX	Saudi Arabia
UG	Turkey,South Africa,Egypt
UN	Asean

DX-T5	
Area suffix	
US	Singapore
UW	Brazil,Mexico,Peru
UX	Saudi Arabia
UY	Argentina
UG	Turkey,South Africa,Egypt
UN	Asean

ACTIVE BASS EXTENSION

	Main body	Front speaker	Subwoofer	Surround speaker	Center speaker
DX T9	CA DXT9	SP XT9	SP WT9	SP XST9	SP XCT9
DX T7	CA DXT7	SP XT7	SP WT7	SP XST7	SP XCT7
DX T5	CA DXT5	SP XT5		SP XST5	SP XCT5

Lead free solder used in the board (material : Sn-Ag-Cu, melting point : 219 Centigrade)

TABLE OF CONTENTS

1 PRECAUTION 1-6
2 SPECIFIC SERVICE INSTRUCTIONS 1-9
3 DISASSEMBLY 1-10
4 ADJUSTMENT 1-51
5 TROUBLESHOOTING 1-61

COPYRIGHT © 2005 Victor Company of Japan, Limited

No.MB368
2005/5

SPECIFICATION

CA-DXT9

Amplifier section	Output Power	FRONT SPEAKERS	150 W per channel, min. RMS, driven into 4 Ω at 1 kHz with no more than 10% total harmonic distortion.
		CENTER SPEAKER	140 W per channel, min. RMS, driven into 6 Ω at 1 kHz with no more than 10% total harmonic distortion.
		SURROUND SPEAKERS	140 W per channel, min. RMS, driven into 6 Ω at 1 kHz with no more than 10% total harmonic distortion.
		SUBWOOFERS	150 W per channel, min. RMS, driven into 4 Ω at 1 kHz with no more than 10% total harmonic distortion.
	Digital output	OPTICAL DIGITAL OUTPUT	-21 dBm to -15 dBm (660 nm ±30 nm)
	Audio input sensitivity/ Impedance*1	AUX	300 mV/47 kΩ
		MIC 1/2	3.0 mV/50 kΩ
	VIDEO OUT	Color system	NTSC/PAL selectable
	VIDEO (composite)		1 V(p-p)/75 Ω
	S-VIDEO		Y (luminance):1 V(p-p)/75 Ω C (chrominance, burst):0.286 V(p-p)/75 Ω
	COMPONENT (Interlace/Progressive)		(Y):1 V(p-p)/75 Ω (PB/PR):0.7 V(p-p)/75 Ω
	Speaker Terminals		4 Ω - 16 Ω (front speakers/subwoofers) 6 Ω - 16 Ω (surround/center speakers)
Tuner section	FM tuning range		87.50 MHz - 108.00 MHz
	AM (MW) tuning range		531 kHz - 1 602 kHz (at 9 kHz) 530 kHz - 1 600 kHz (at 10 kHz)
Disc player section	Playable disc		DVD Video/DVD Audio/CD/VCD/SVCD CD-R/CD-RW (recorded in Audio CD/Video CD/Super Video CD formats and MP3/WMA/JPEG files) DVD-R (recorded in DVD Video format) DVD-RW (recorded in DVD Video format or DVD-VR format) DVD-RAM (recorded in DVD-VR format)
	Dynamic range		80 dB
	Horizontal resolution		500 lines
	Wow and flutter		Immeasurable
Cassette deck section	Frequency response Normal (type I)		50 Hz - 14 000 Hz
	Wow and flutter		0.15% (WRMS)
General	Power requirement		AC 110 V / AC 127 V / AC 220 V / AC 230 V - AC 240 V , (adjustable with the voltage selector), 50 Hz / 60 Hz
	Power consumption		335 W (at operation) 29 W (on standby)
	Dimensions (W/H/D) (approx.)		185 mm × 460 mm × 361 mm
	Mass (approx.)		11.4 kg

*1: Measured at 1 kHz, with tape recording signal 300 mV

CA-DXT7

Amplifier section	Output Power	FRONT SPEAKERS	150 W per channel, min. RMS, driven into 4 Ω at 1 kHz with no more than 10% total harmonic distortion.
		CENTER SPEAKER	50 W per channel, min. RMS, driven into 6 Ω at 1 kHz with no more than 10% total harmonic distortion.
		SURROUND SPEAKERS	50 W per channel, min. RMS, driven into 6 Ω at 1 kHz with no more than 10% total harmonic distortion.
		SUBWOOFERS	150 W per channel, min. RMS, driven into 4 Ω at 1 kHz with no more than 10% total harmonic distortion.
	Digital output	OPTICAL DIGITAL OUTPUT	-21 dBm to -15 dBm (660 nm ±30 nm)
	Audio input sensitivity/ Impedance*1	AUX	300 mV/47 kΩ
		MIC 1/2	3.0 mV/50 kΩ
	VIDEO OUT	Color system	NTSC/PAL selectable
	VIDEO (composite)		1 V(p-p)/75 Ω
	S-VIDEO		Y (luminance):1 V(p-p)/75 Ω C (chrominance, burst):0.286 V(p-p)/75 Ω
	COMPONENT (Interlace/Progressive)		(Y):1 V(p-p)/75 Ω (PB/PR):0.7 V(p-p)/75 Ω
	Speaker Terminals		4 Ω - 16 Ω (front speakers/subwoofers) 6 Ω - 16 Ω (surround/center speakers)
Tuner section	FM tuning range		87.50 MHz - 108.00 MHz
	AM (MW) tuning range		531 kHz - 1 602 kHz (at 9 kHz) 530 kHz - 1 600 kHz (at 10 kHz)
Disc player section	Playable disc		DVD Video/DVD Audio/CD/VCD/SVCD CD-R/CD-RW (recorded in Audio CD/Video CD/Super Video CD formats and MP3/WMA/JPEG files) DVD-R (recorded in DVD Video format) DVD-RW (recorded in DVD Video format or DVD-VR format) DVD-RAM (recorded in DVD-VR format)
	Dynamic range		80 dB
	Horizontal resolution		500 lines
	Wow and flutter		Immeasurable
Cassette deck section	Frequency response Normal (type I)		50 Hz - 14 000 Hz
	Wow and flutter		0.15% (WRMS)
General	Power requirement		AC 110 V / AC 127 V / AC 220 V / AC 230 V - AC 240 V , (adjustable with the voltage selector), 50 Hz / 60 Hz
	Power consumption		270 W (at operation) 25 W (on standby)
	Dimensions (W/H/D) (approx.)		185 mm × 460 mm × 361 mm
	Mass (approx.)		11.4 kg

*1: Measured at 1 kHz, with tape recording signal 300 mV

DX-T5

Amplifier section	Output Power	MAIN SPEAKERS	150 W per channel, min. RMS, driven into 4 Ω at 1 kHz with no more than 10% total harmonic distortion.
	Digital output	OPTICAL DIGITAL OUTPUT	-21 dBm to -15 dBm (660 nm ±30 nm)
	Audio input sensitivity/ Impedance*1	AUX	300 mV/47 kΩ
		MIC 1/2	3.0 mV/50 kΩ
	VIDEO OUT	Color system	NTSC/PAL selectable
	VIDEO (composite)		1 V(p-p)/75 Ω
	S-VIDEO		Y (luminance):1 V(p-p)/75 Ω C (chrominance, burst):0.286 V(p-p)/75 Ω
	COMPONENT (Interlace/Progressive)		(Y):1 V(p-p)/75 Ω (PB/PR):0.7 V(p-p)/75 Ω
	Speaker Terminals		4 Ω - 16 Ω (Main speakers) 6 Ω - 16 Ω (Surround speakers)
Tuner section	FM tuning range		87.50 MHz - 108.00 MHz
	AM (MW) tuning range		531 kHz - 1 710 kHz (at 9 kHz) 530 kHz - 1 710 kHz (at 10 kHz)
Disc player section	Playable disc		DVD Video/DVD Audio/CD/VCD/SVCD CD-R/CD-RW (recorded in Audio CD/Video CD/Super Video CD formats and MP3/WMA/JPEG files) DVD-R (recorded in DVD Video format) DVD-RW (recorded in DVD Video format or DVD-VR format) DVD-RAM (recorded in DVD-VR format)
	Dynamic range		80 dB
	Horizontal resolution		500 lines
	Wow and flutter		Immeasurable
Cassette deck section	Frequency response Normal (type I)		50 Hz - 14 000 Hz
	Wow and flutter		0.15% (WRMS)
General	Power requirement		AC 110 V / AC 127 V / AC 220 V / AC 230 V - AC 240 V , (adjustable with the voltage selector), 50 Hz / 60 Hz
	Power consumption		195 W (at operation) 20 W (on standby)
	Dimensions (W/H/D) (approx.)		185 mm × 460 mm × 361 mm
	Mass (approx.)		10.9 kg

*1: Measured at 1 kHz, with tape recording signal 300 mV

Speakers

Main Speakers	Type		3-Way 3-Speaker Bass Reflex (Magnetically-Shielded Type)
	Speaker systems	Woofer	18 cm cone × 1
		Mid	5 cm cone × 1
		Tweeter	2 cm dome × 1
	Power handling capacity		150 W
	Impedance		4 Ω
	Frequency range		37 Hz - 31 000 Hz
	Sound pressure level		85 dB/W·m
	Dimensions (W/H/D) (approx.)		204 mm × 460 mm × 271 mm
	Mass (approx.)		4.6 kg each
Surround Speakers	Speaker systems		8 cm cone × 1
	Power handling capacity		40 W
	Impedance		16 Ω
	Dimensions (W/H/D) (approx.)		105 mm × 230 mm × 125 mm
	Mass (approx.)		0.7 kg each

Design and specifications are subject to change without notice.

SECTION 1
PRECAUTION

1.1 Safety Precautions

(1) This design of this product contains special hardware and many circuits and components specially for safety purposes. For continued protection, no changes should be made to the original design unless authorized in writing by the manufacturer. Replacement parts must be identical to those used in the original circuits. Services should be performed by qualified personnel only.

(2) Alterations of the design or circuitry of the product should not be made. Any design alterations of the product should not be made. Any design alterations or additions will void the manufacturers warranty and will further relieve the manufacture of responsibility for personal injury or property damage resulting therefrom.

(3) Many electrical and mechanical parts in the products have special safety-related characteristics. These characteristics are often not evident from visual inspection nor can the protection afforded by them necessarily be obtained by using replacement components rated for higher voltage, wattage, etc. Replacement parts which have these special safety characteristics are identified in the Parts List of Service Manual. Electrical components having such features are identified by shading on the schematics and by (⚠) on the Parts List in the Service Manual. The use of a substitute replacement which does not have the same safety characteristics as the recommended replacement parts shown in the Parts List of Service Manual may create shock, fire, or other hazards.

(4) The leads in the products are routed and dressed with ties, clamps, tubings, barriers and the like to be separated from live parts, high temperature parts, moving parts and/or sharp edges for the prevention of electric shock and fire hazard. When service is required, the original lead routing and dress should be observed, and it should be confirmed that they have been returned to normal, after reassembling.

(5) Leakage shock hazard testing
After reassembling the product, always perform an isolation check on the exposed metal parts of the product (antenna terminals, knobs, metal cabinet, screw heads, headphone jack, control shafts, etc.) to be sure the product is safe to operate without danger of electrical shock.Do not use a line isolation transformer during this check.

- Plug the AC line cord directly into the AC outlet. Using a "Leakage Current Tester", measure the leakage current from each exposed metal parts of the cabinet, particularly any exposed metal part having a return path to the chassis, to a known good earth ground. Any leakage current must not exceed 0.5mA AC (r.m.s.).
- Alternate check method
  Plug the AC line cord directly into the AC outlet. Use an AC voltmeter having, 1,000Ω per volt or more sensitivity in the following manner. Connect a 1,500Ω 10W resistor paralleled by a 0.15μF AC-type capacitor between an exposed metal part and a known good earth ground.
  Measure the AC voltage across the resistor with the AC voltmeter.
  Move the resistor connection to each exposed metal part, particularly any exposed metal part having a return path to the chassis, and measure the AC voltage across the resistor. Now, reverse the plug in the AC outlet and repeat each measurement. Voltage measured any must not exceed 0.75 V AC (r.m.s.). This corresponds to 0.5 mA AC (r.m.s.).

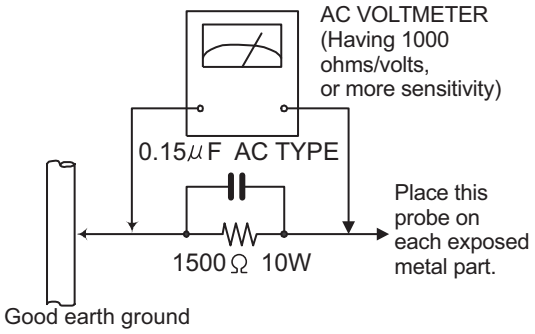

1.2 Warning

(1) This equipment has been designed and manufactured to meet international safety standards.
(2) It is the legal responsibility of the repairer to ensure that these safety standards are maintained.
(3) Repairs must be made in accordance with the relevant safety standards.
(4) It is essential that safety critical components are replaced by approved parts.
(5) If mains voltage selector is provided, check setting for local voltage.

1.3 Caution

Burrs formed during molding may be left over on some parts of the chassis.
Therefore, pay attention to such burrs in the case of preforming repair of this system.

1.4 Critical parts for safety

In regard with component parts appearing on the silk-screen printed side (parts side) of the PWB diagrams, the parts that are printed over with black such as the resistor (▬), diode (▮) and ICP (●) or identified by the " ⚠ " mark nearby are critical for safety. When replacing them, be sure to use the parts of the same type and rating as specified by the manufacturer.
(This regulation dose not Except the J and C version)

1.5 Preventing static electricity

Electrostatic discharge (ESD), which occurs when static electricity stored in the body, fabric, etc. is discharged, can destroy the laser diode in the traverse unit (optical pickup). Take care to prevent this when performing repairs.

1.5.1 Grounding to prevent damage by static electricity

Static electricity in the work area can destroy the optical pickup (laser diode) in devices such as laser products.
Be careful to use proper grounding in the area where repairs are being performed.

(1) Ground the workbench
Ground the workbench by laying conductive material (such as a conductive sheet) or an iron plate over it before placing the traverse unit (optical pickup) on it.

(2) Ground yourself
Use an anti-static wrist strap to release any static electricity built up in your body.

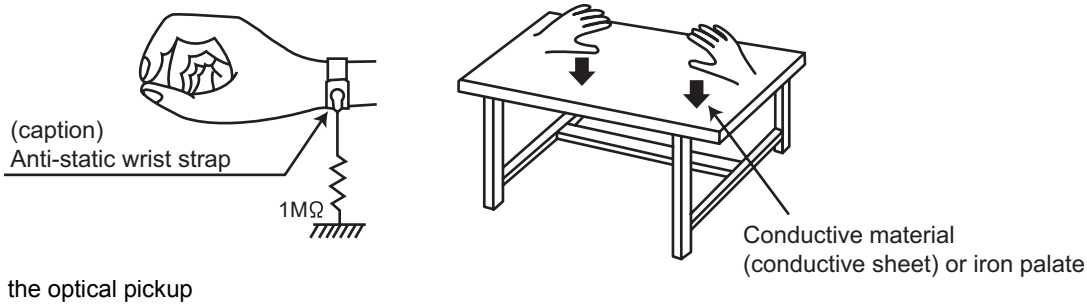

(3) Handling the optical pickup
- In order to maintain quality during transport and before installation, both sides of the laser diode on the replacement optical pickup are shorted. After replacement, return the shorted parts to their original condition.
(Refer to the text.)
- Do not use a tester to check the condition of the laser diode in the optical pickup. The tester's internal power source can easily destroy the laser diode.

1.6 Handling the traverse unit (optical pickup)

(1) Do not subject the traverse unit (optical pickup) to strong shocks, as it is a sensitive, complex unit.
(2) Cut off the shorted part of the flexible cable using nippers, etc. after replacing the optical pickup. For specific details, refer to the replacement procedure in the text. Remove the anti-static pin when replacing the traverse unit. Be careful not to take too long a time when attaching it to the connector.
(3) Handle the flexible cable carefully as it may break when subjected to strong force.
(4) I t is not possible to adjust the semi-fixed resistor that adjusts the laser power. Do not turn it.

1.7 Attention when traverse unit is decomposed

***Please refer to "Disassembly method" in the text for the pickup unit.**

- Apply solder to the short land sections before the flexible wire is disconnected from the connecto on the servo board. (If the flexible wire is disconnected without applying solder, the pickup may be destroyed by static electricity.)
- In the assembly, be sure to remove solder from the short land sections after connecting the flexible wire.

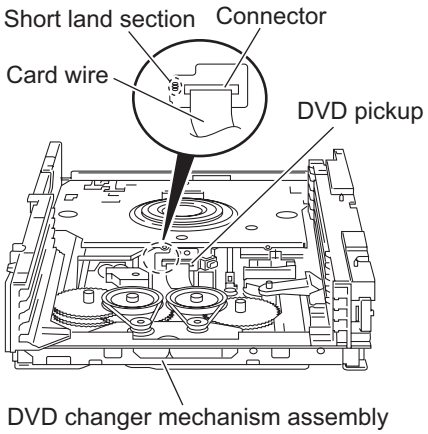

1.8 Important for laser products

1. **CLASS 1 LASER PRODUCT**
2. **DANGER :** Invisible laser radiation when open and inter lock failed or defeated. Avoid direct exposure to beam.
3. **CAUTION :** There are no serviceable parts inside the Laser Unit. Do not disassemble the Laser Unit. Replace the complete Laser Unit if it malfunctions.
4. **CAUTION :** The CD,MD and DVD player uses invisible laser radiation and is equipped with safety switches which prevent emission of radiation when the drawer is open and the safety interlocks have failed or are defeated. It is dangerous to defeat the safety switches.
5. **CAUTION :** If safety switches malfunction, the laser is able to function.
6. **CAUTION :** Use of controls, adjustments or performance of procedures other than those specified here in may result in hazardous radiation exposure.

⚠ ***CAUTION*** **Please use enough caution not to see the beam directly or touch it in case of an adjustment or operation check.**

CAUTION : Visible and invisible laser radiation when open and interlock failed or defeated.
AVOID DIRECT EXPOSUREBTO BEAM.

ADVARSEL : Synlig og usynlig laserstråling når maskinen er åben eller interlocken fejler. Undgå direkte eksponering til stråling.

VARNING : Synlig och osynlig laserstråling när den öppnas och spärren är urkopplad. Betrakta ej strålen.

VARO : Avattaessa ja suojalukitus ohitettuna tai viallisena olet alttiina näkyvälle ja näkymätttömälle lasersäteilylle. Vältä säteen kohdistumista suoraan itseesi.

REPRODUCTION AND POSITION OF LABELS

WARNING LABEL

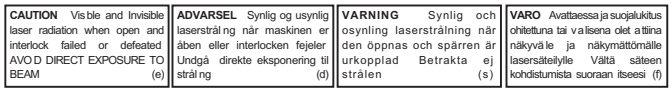

SECTION 2
SPECIFIC SERVICE INSTRUCTIONS

This service manual does not describe SPECIFIC SERVICE INSTRUCTIONS.

SECTION 3
DISASSEMBLY

3.1 Main body section

3.1.1 Removing the metal cover (See Figs.1 to 3)

(1) From the both sides of the main body, remove the six screws **A** attaching the metal cover. (See Figs.1 and 2.)
(2) From the back side of the main body, remove the eight screws **B** attaching the metal cover. (See Fig.3.)
(3) Remove the metal cover from the main body while lifting the rear section of the metal cover in the direction of the arrow. (See Figs.1 and 2.)

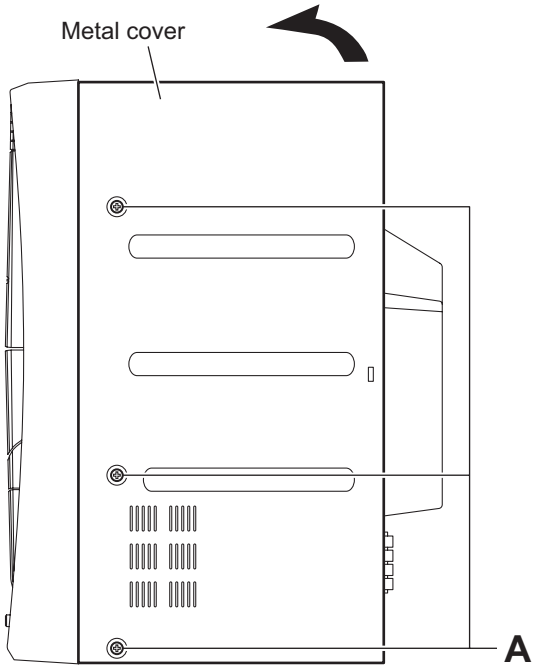

Fig.1

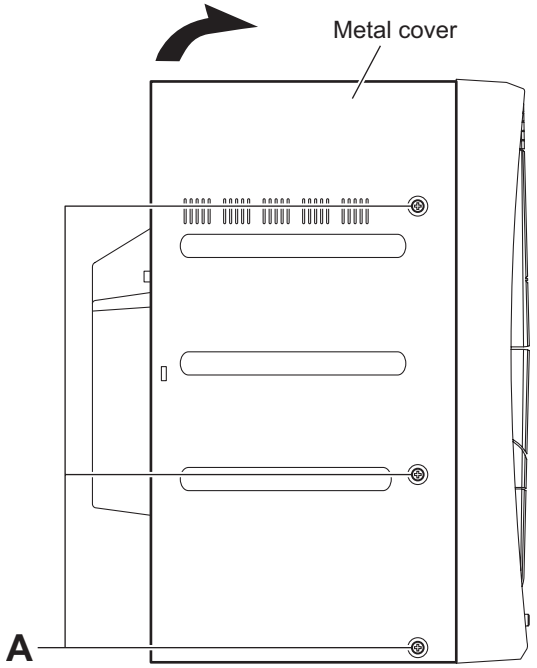

Fig.2

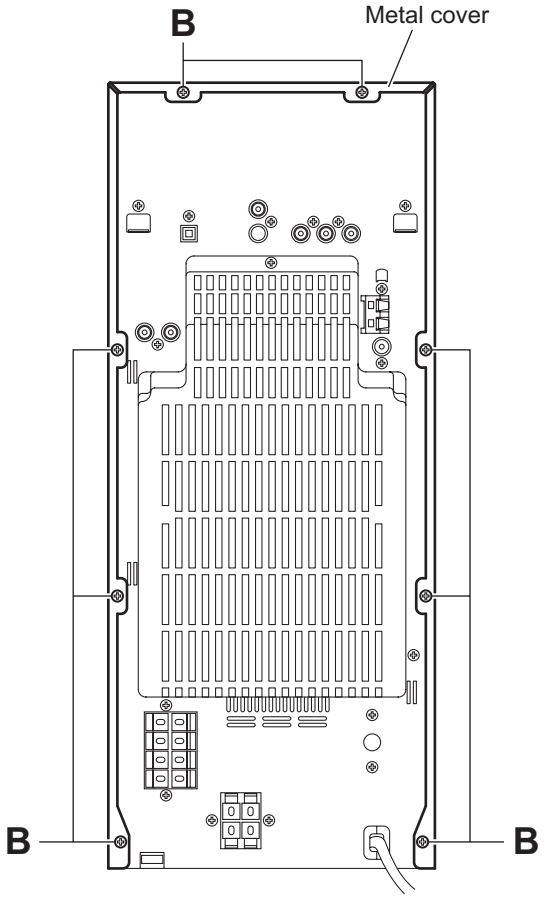

Fig.3

3.1.2 Removing the front panel assembly (See Figs.4 to 6)

- Remove the metal cover.
  (1) From the right side of the main body, disconnect the card wire from the connectors CN740 on the reverse side of the main board. (See Fig.4.)
  (2) From the left side of the main body, disconnect the card wires from the connectors (CN720, CN730) on the forward side of the main board. (See Fig.5.)
  (3) Disconnect the parallel wire while releasing the lock of the connector CN105 on the primary board in the direction of the arrow. (See Fig.5.)
  (4) Disconnect the parallel wire from the connector CN202 on the bridge board. (See Fig.5.)
  (5) From the both side of the main body, remove the two screws **C** attaching the front panel assembly to the main body. (See Figs.4 and 5.)
  (6) From the bottom side of the main body, remove the two screws **D** attaching the front panel assembly. (See Fig.6.)
  (7) From the both side of the main body, release the claws **a** and remove the front panel assembly from the main body in the direction of the arrow. (See Figs.4 to 6.)

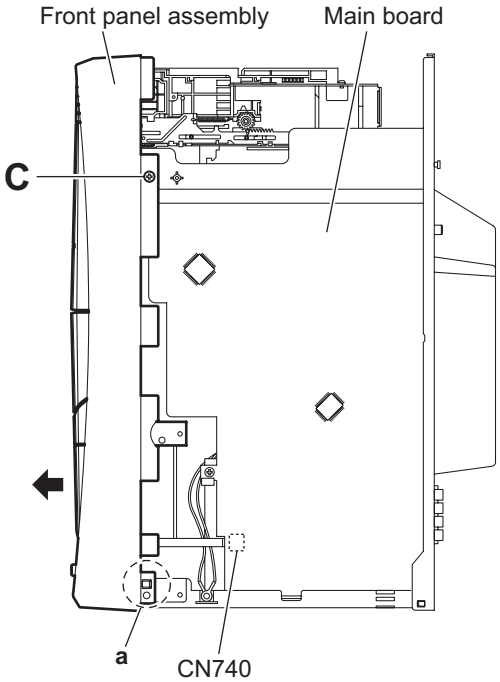

Fig.4

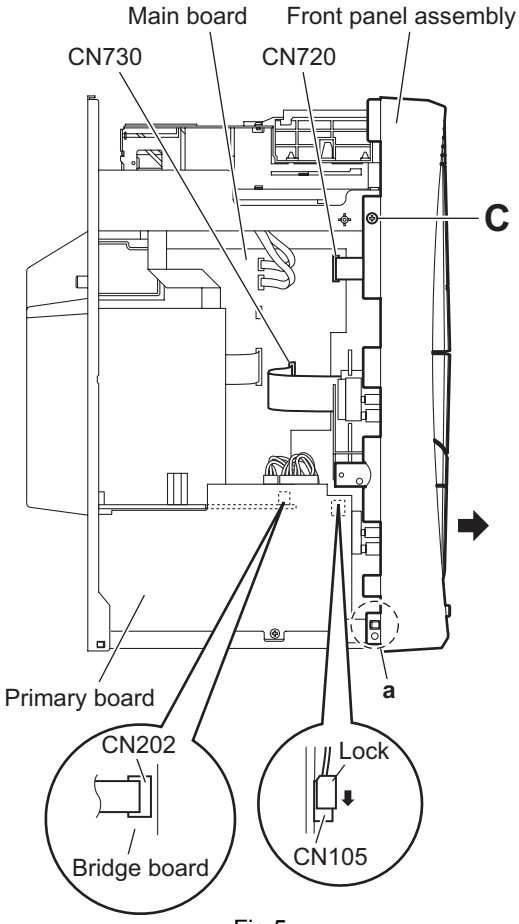

Fig.5

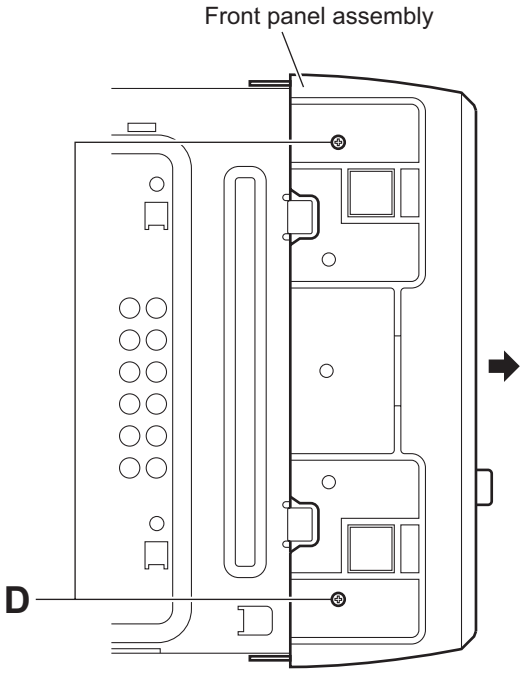

Fig.6

3.1.3 Removing the tuner (See Fig.7)

- Remove the metal cover.
  (1) From the back side of the main body, remove the two screws **E** attaching the tuner to the rear panel.
  (2) Take out the tuner from the main body and disconnect the card wire from the connector CN1 on the tuner.

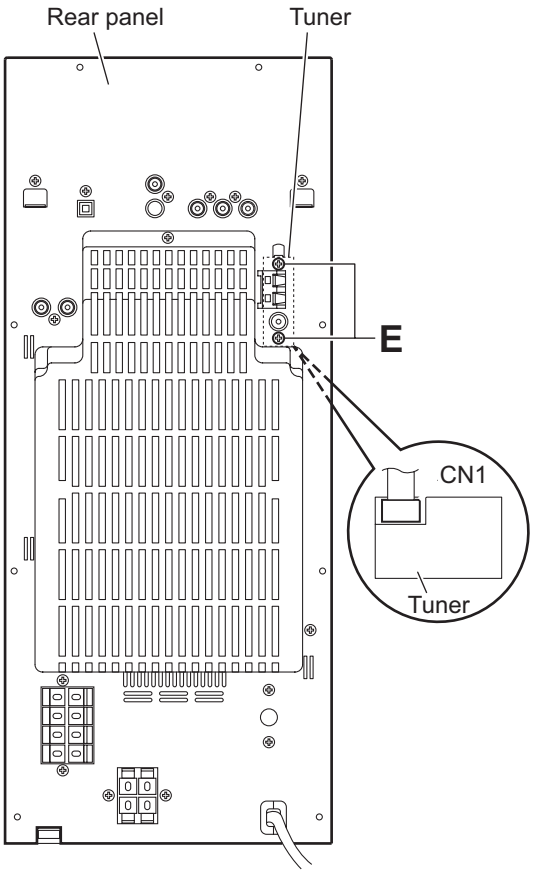

Fig.7

3.1.4 Removing the DVD changer mechanism assembly (See Figs.8 to 10)

- Remove the metal cover.
  (1) From the left side of the main body, disconnect the card wires from the connectors (CN800, CN810) on the main board. (See Fig.8.) **[For DX-T9, DX-T7]**
  (2) From the left side of the main body, disconnect the card wires from the connector CN800 on the main board. (See Fig.8.) **[For DX-T5]**
  (3) From the top side of the main body, remove the two screws **F** attaching the DVD changer mechanism assembly on the mecha chassis. (See Fig.9.)
  (4) Take out the DVD changer mechanism assembly from the main body and disconnect the card wire from the connector CN930 on the video board. (See Fig.9.)

Reference:

When the resolution of the DVD changer mechanism assembly is done sequentially, release the claws **b** of the tray fitting and remove the five tray fitting from the DVD changer mechanism assembly. (See Fig.10.)

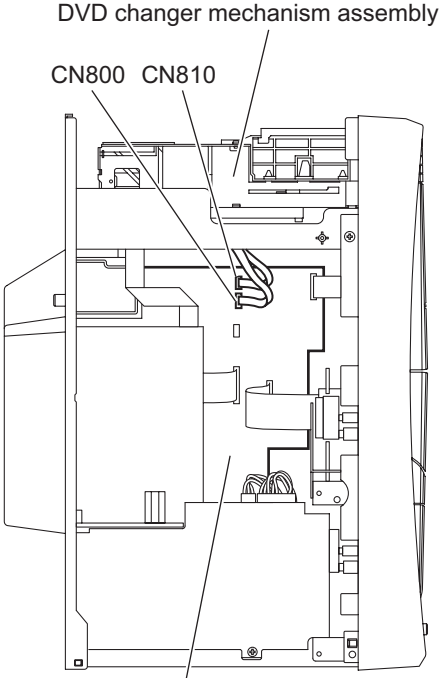

Fig.8

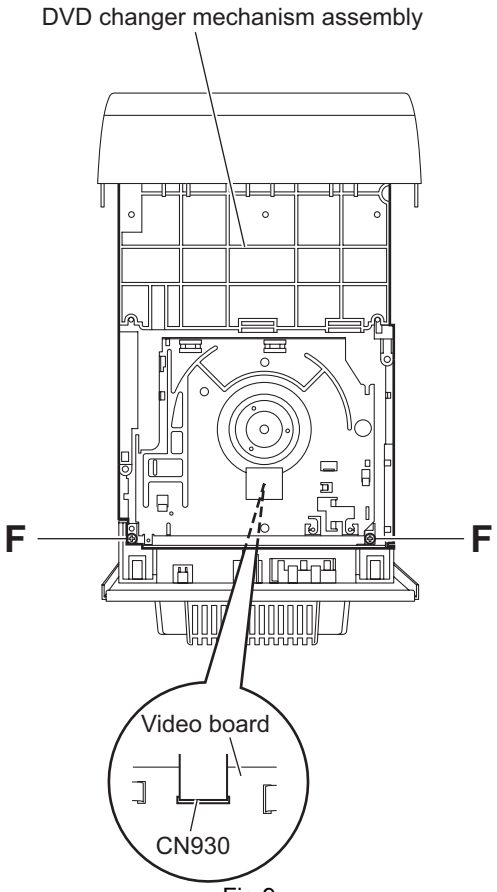

Fig.9

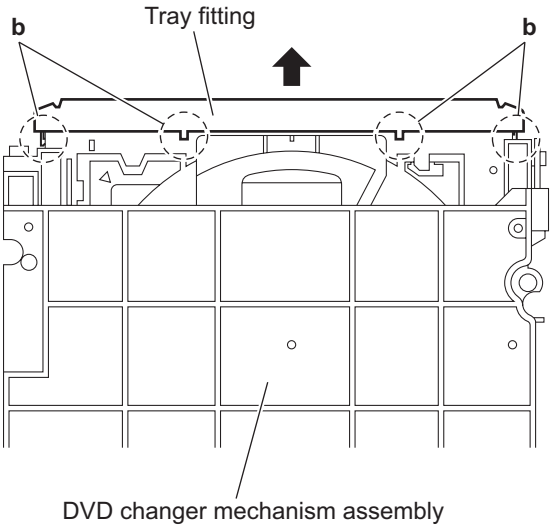

Fig.10

3.1.5 Removing the video board (See Figs.11 and 12.)

- Remove the metal cover and DVD changer mechanism assembly .
  (1) From the back side of the main body, remove the four screws **G** attaching the video board to the rear panel. (See Fig.11.)
  (2) From the top side of the main body, disconnect the card wires from the connectors (CN920, CN931) on the video board. (See Fig.12.)
  (3) Take out the video board in the direction of the arrow while removing it from the sections **c** of the mecha chassis. (See Fig.12.)

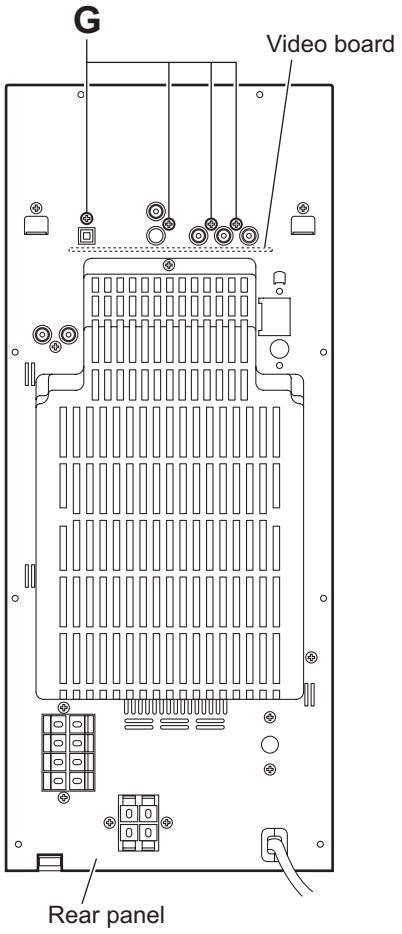

Fig.11

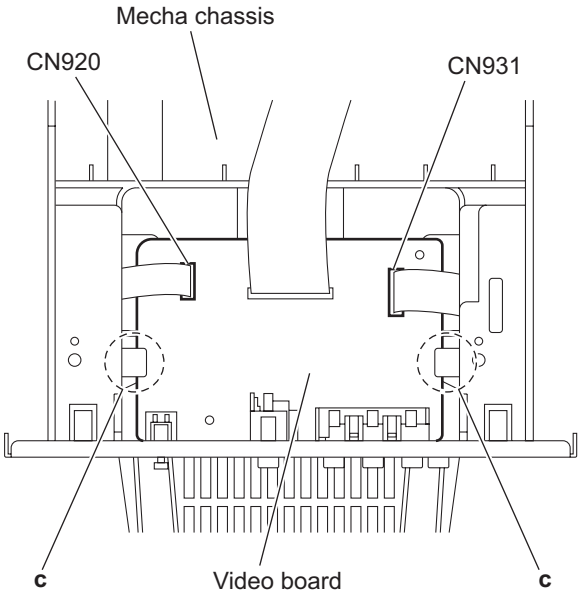

Fig.12

3.1.6 Removing the fan (See Figs.13 and 14.)

- Remove the metal cover.
  (1) From the back side of the main body, remove the screw **H** attaching the rear cover to the rear panel. (See Fig.13.)
  (2) Remove the joints **d** and remove the rear cover. (See Fig.13.)From the left side of the main body, disconnect the wire from the connector CN304 on the amplifier 2 board. (See Fig.14.) **[For DX-T9, DX-T5]**
  (3) Remove the joints **d** and remove the rear cover. (See Fig.13.)From the left side of the main body, disconnect the wire from the connector CN604 on the amplifier 2 board. (See Fig.14.) **[For DX-T7]**
  (4) Release the joints **e** of the fan bracket in the direction of the arrow and take out the fan with the fan bracket. (See Fig.14.)

Reference:
Remove the fan from the fan bracket as required.

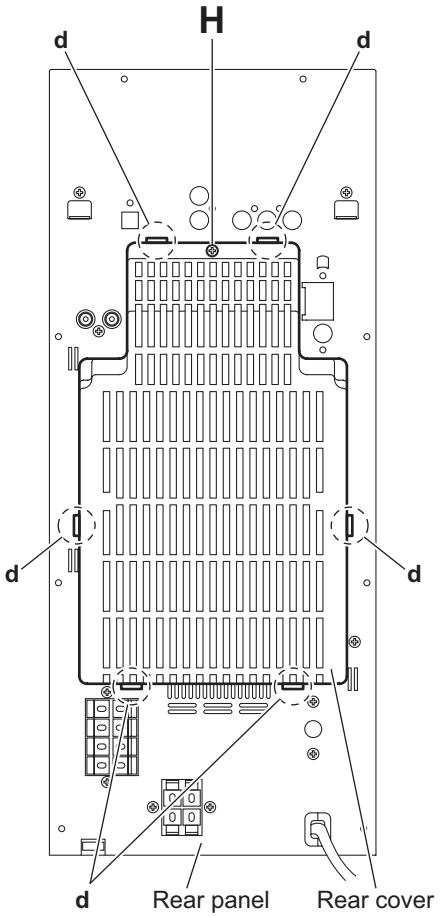

Fig.13

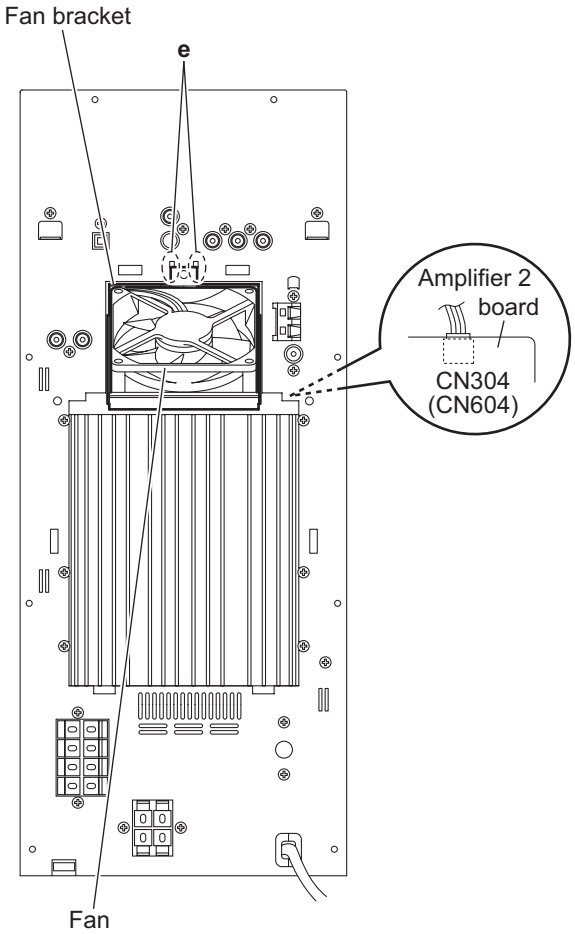

Fig.14

3.1.7 Removing the rear panel (See Fig.15)

- Remove the metal cover and fan.
  (1) Remove the two screws **J** and eighteen screws **K** attaching the rear panel. **[For DX-T9, DX-T7]**
  (2) Remove the two screws **J** and seventeen screws **K** attaching the rear panel. **[For DX-T5]**
  (3) Release the sections **f** of the rear panel and remove the joints **g** of the mecha chassis in the direction of the arrow.
  (4) Remove the rear panel from the main body.

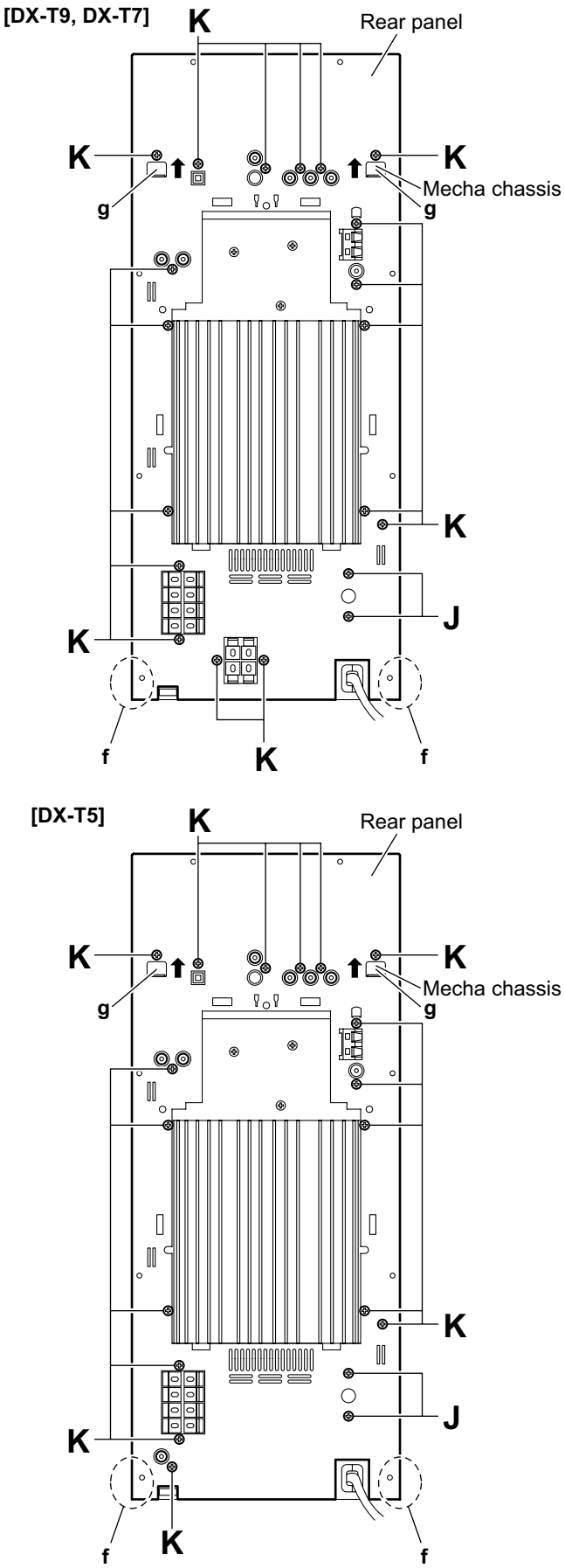

Fig.15

3.1.8 Removing the main board (See Fig.16)

- Remove the metal cover, tuner, fan and rear panel.
  (1) From the right side of the main body, remove the screw **L** and screw **M** attaching the main board.
  (2) From the inside of the main body, disconnect the card wires from the connectors (CN720, CN730, CN740, CN760, CN800, CN810, CN820, CN830) on the forward side of the main board. **[For DX-T9, DX-T7]**
  (3) From the inside of the main body, disconnect the card wires from the connectors (CN720, CN730, CN740, CN760, CN800, CN820, CN830) on the forward side of the main board. **[For DX-T5]**
  (4) Disconnect the main board from the bridge board toward this side while releasing the claw **h** of the connector CN850 on the main board.
  (5) Disconnect the main board from the surround terminal board in the direction of the arrow while releasing the claw **i** of the connector CN970 on the surround terminal board. **[For DX-T7]**
  (6) Disconnect the main board from the surround terminal board in the direction of the arrow while releasing the claw **i** of the connector CN990 on the surround terminal board. **[For DX-T9]**

Note:
When releasing the claws (**h**, **i**), take care not to break them.

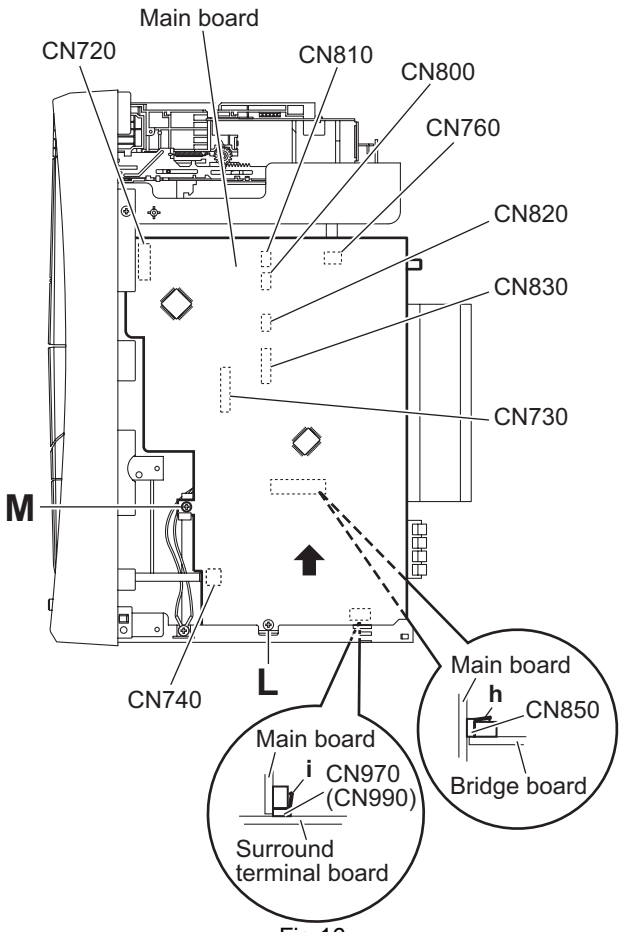

Fig.16

3.1.9 Removing the amplifier 1 and amplifier 2 boards (See Fig.17 to 19) [For DX-T9]

- Remove the metal cover, tuner, fan, rear panel and main board.
  (1) (1)From the right side of the main body, remove the screw **N** attaching the earth wires to the bottom chassis. (See Fig.17.)

  Reference:
  After reassembling, fix the earth wires with the spacer as before. (See Fig.17.)

  (2) Disconnect the amplifier 2 board from the bridge board in the direction of the arrow while releasing the claw **j** of the connector CN200 on the bridge board. (See Fig.17.)
  (3) (3)From the left side of the main body, disconnect the card wire from the connector CN303 on the amplifier 1 board. (See Fig.17.)
  (4) Disconnect the amplifier 1 board from the bridge board in the direction of the arrow while releasing the claw **k** of the connector CN201 on the bridge board. (See Fig.18.)

  Note:
  When releasing the claws (**j**, **k**), take care not to break them. (See Figs.17 and 18.)

  (5) Take out the amplifier 1 board and amplifier 2 board together from the main body.
  (6) Remove the two screws **P** and remove the leaf spring. (See Fig.19.)
  (7) Remove the two screws **P** and remove the amplifier 1 board from the heat sink. (See Fig.19.)
  (8) Remove the four screws **P** and remove the amplifier 2 board from the heat sink. (See Fig.19.)

3.1.10 Removing the amplifier 1 and amplifier 2 boards (See Fig.17 to 19) [For DX-T7]

- Remove the metal cover, tuner, fan, rear panel and main board.
  (1) From the right side of the main body, remove the screw **N** attaching the earth wires to the bottom chassis. (See Fig.17.)

  Reference:
  After reassembling, fix the earth wires with the spacer as before. (See Fig.17.)

  (2) Disconnect the amplifier 2 board from the bridge board in the direction of the arrow while releasing the claw **j** of the connector CN200 on the bridge board. (See Fig.17.)
  (3) From the left side of the main body, disconnect the card wire from the connector CN603 on the amplifier 1 board. (See Fig.17.)
  (4) Disconnect the amplifier 1 board from the bridge board in the direction of the arrow while releasing the claw **k** of the connector CN201 on the bridge board. (See Fig.18.)

  Note:
  When releasing the claws (**j**, **k**), take care not to break them. (See Figs.17 and 18.)

  (5) Take out the amplifier 1 board and amplifier 2 board together from the main body.
  (6) Remove the two screws **P** and remove the leaf spring. (See Fig.19.)
  (7) Remove the two screws **P** and remove the amplifier 1 board from the heat sink. (See Fig.19.)
  (8) Remove the three screws **P** and remove the amplifier 2 board from the heat sink. (See Fig.19.)

3.1.11 Removing the amplifier 1 and amplifier 2 boards (See Fig.17 to 19) [For DX-T5]

- Remove the metal cover, tuner, fan, rear panel and main board.
  (1) From the right side of the main body, remove the screw **N** attaching the earth wires to the bottom chassis. (See Fig.17.)

  Reference:
  After reassembling, fix the earth wires with the spacer as before. (See Fig.17.)

  (2) Disconnect the amplifier 2 board from the bridge board in the direction of the arrow while releasing the claw **j** of the connector CN200 on the bridge board. (See Fig.17.)
  (3) From the left side of the main body, disconnect the card wire from the connector CN303 on the amplifier 1 board. (See Fig.17.)
  (4) Disconnect the amplifier 1 board from the bridge board in the direction of the arrow while releasing the claw **k** of the connector CN201 on the bridge board. (See Fig.18.)

  Note:
  When releasing the claws (**j**, **k**), take care not to break them. (See Figs.17 and 18.)

  (5) Take out the amplifier 1 board and amplifier 2 board together from the main body.
  (6) Remove the two screws **P** attaching the leaf spring and remove the amplifier 1 board from the heat sink. (See Fig.19.)
  (7) Remove the two screws **P** and remove the amplifier 2 board from the heat sink. (See Fig.19.)

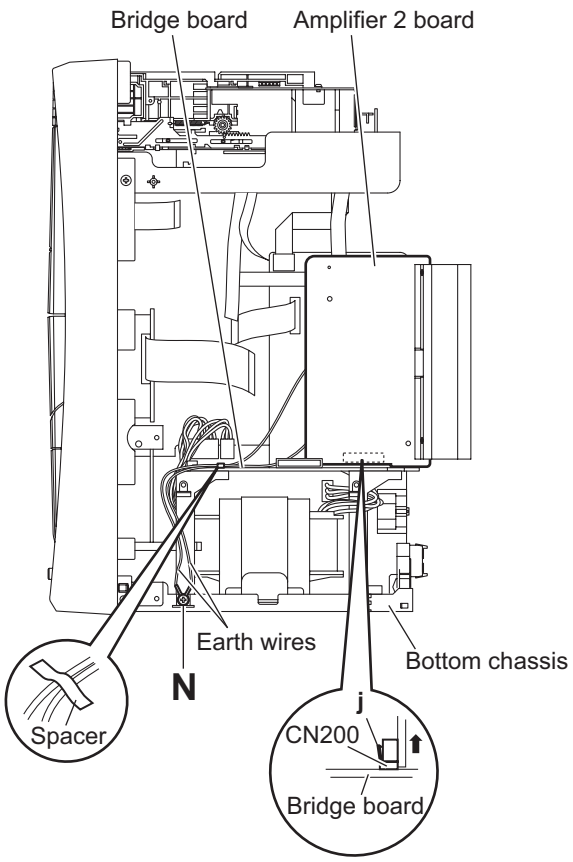

Fig.17

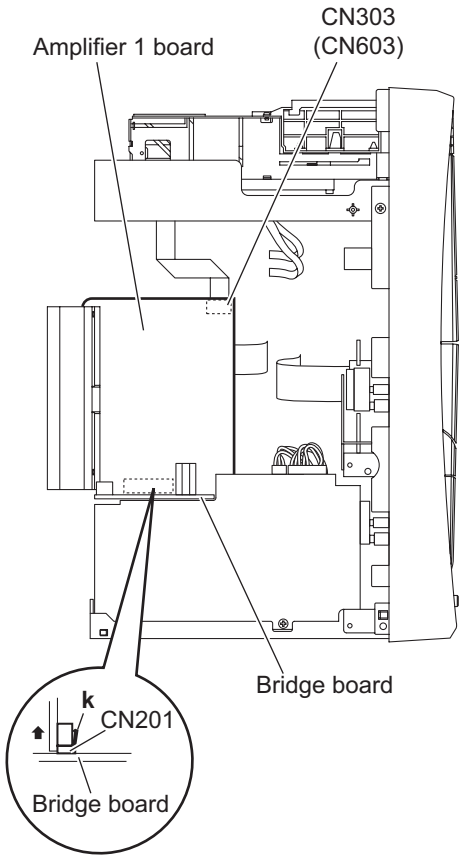

Fig.18

[DX-T9]

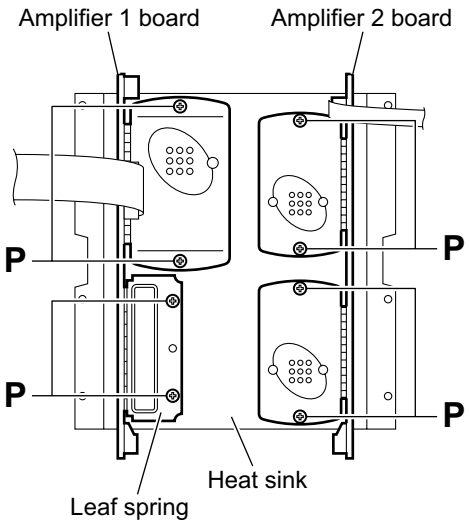

[DX-T7]

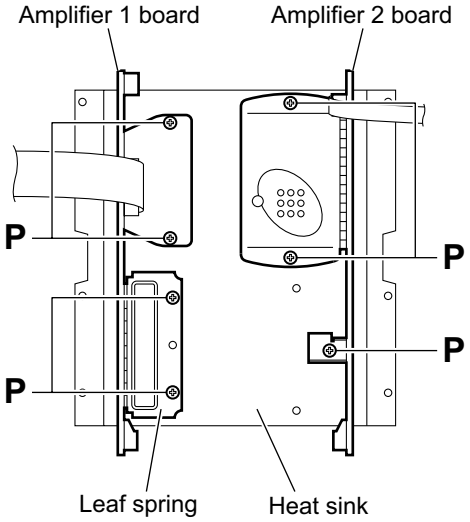

[DX-T5]

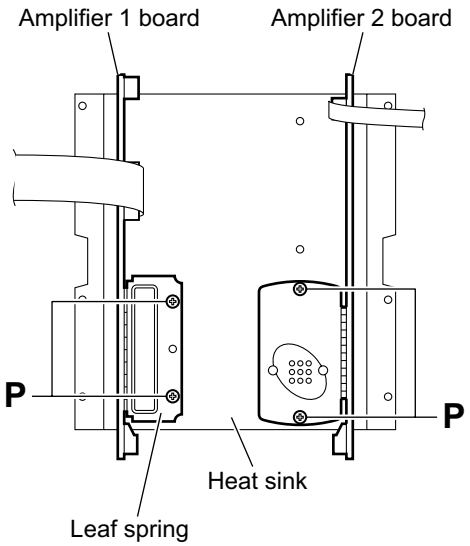

Fig.19

3.1.12 Removing the primary board (See Fig.20)

- Remove the metal cover, tuner, fan, rear panel, main board, amplifier 1 board and amplifier 2 board.
  (1) From the left side of the main body, remove the screw **Q** and screw **R** attaching the primary board.
  (2) Disconnect the wires from the connectors (CN103, CN106) on the primary board.
  (3) Disconnect the parallel wire while releasing the lock of the connector CN105 on the primary board in the direction of the arrow.
  (4) Release the claw **m** in thr direction of the arrow and disconnect the primary board from the bridge board toward this side while releasing the claw **n** of the connector CN104 on the primary board.

  Note:
  When releasing the claw **n**, take care not to break it.
  (5) Disconnect the wires from the connectors (CN101, CN102) on the forward side of the primary board.
  (6) Disconnect the power cord from the connector CN100 on the primary board.
  (7) Take out the primary board from the main body.

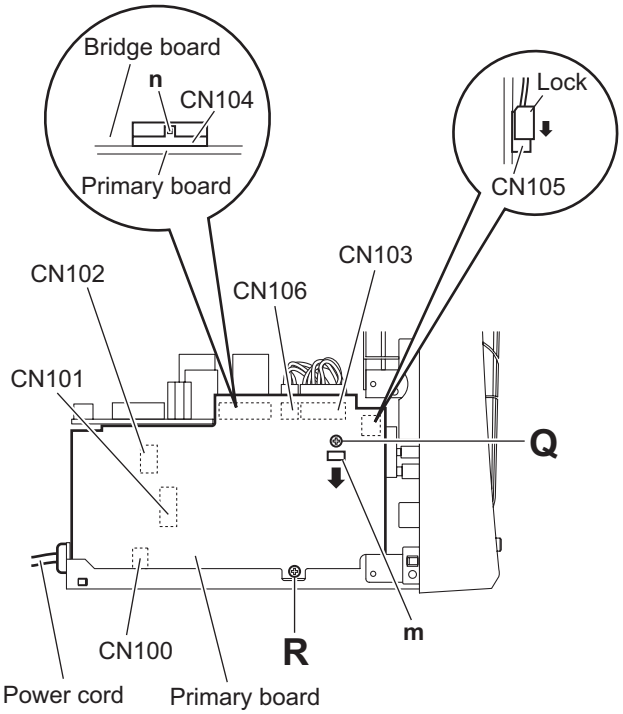

Fig.20

3.1.13 Removing the bridge board (See Fig.21)

- Remove the metal cover, tuner, fan, rear panel, main board, amplifier 1 board, amplifier 2 board and primary board.
  (1) From the top side of the main body, disconnect the parallel wire from the connector CN202 on the bridge board.
  (2) Remove the wire holders bundling the wires.

  Reference:
  After reassembling, bundle the wires with the wire holders as before.
  (3) Remove the screw **S** attaching the bridge board.
  (4) Take out the bridge board from the main body.

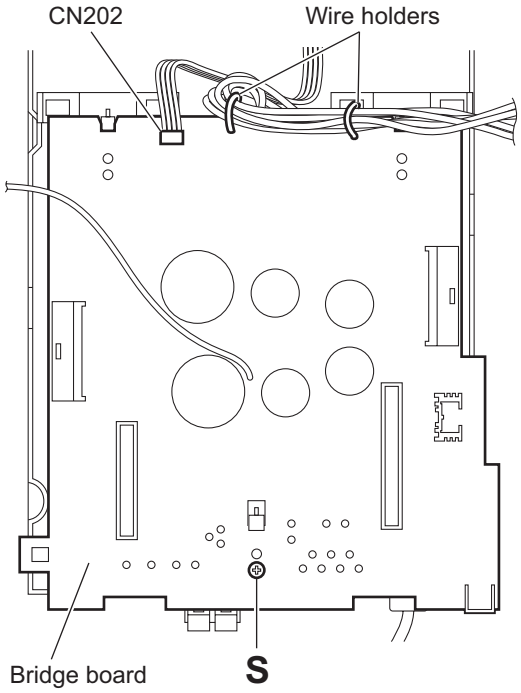

Fig.21

3.1.14 Removing the surround terminal board (See Fig.22.) [For Dx-T9, DX-T7]

- Remove the metal cover, tuner, fan, rear panel, main board, amplifier 1 board, amplifier 2 board, primary board and bridge board.
  (1) Remove the screw **T** attaching the surround terminal board on the bottom chassis.
  (2) Remove the surround terminal board from the section (**p**, **q**) of the bottom chassis.
  (3) Take out the surround terminal board from the main body.

3.1.15 Removing the power transformer (See Fig.22)

- Remove the metal cover, tuner, fan, rear panel, main board, amplifier 1 board, amplifier 2 board, primary board and bridge board.
  (1) Remove the four screws **U** attaching the power transformer.
  (2) Take out the power transformer from the main body.

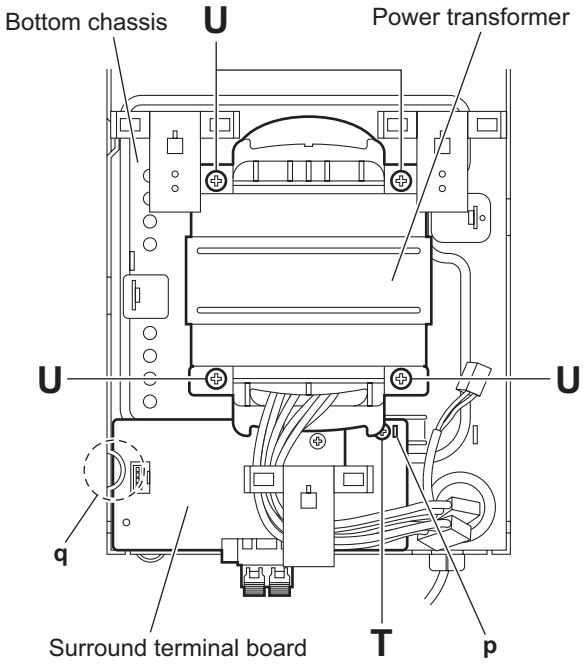

Fig.22

3.1.16 Removing the FL board (See Fig.23)

- Remove the metal cover and front panel assembly.
  (1) From the inside of the front panel assembly, remove the parallel wire from the wire holder.
  (2) Remove the eleven screws **V** and take out the FL board.

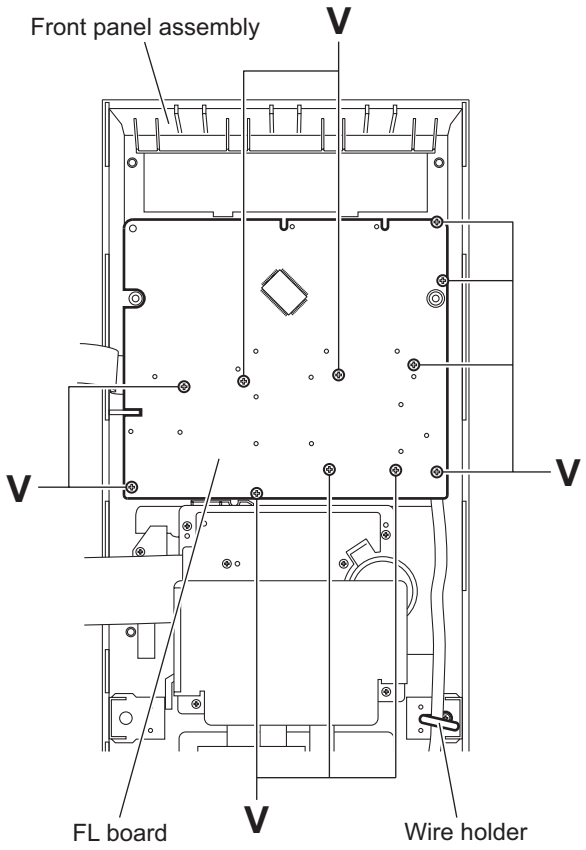

Fig.23

3.1.17 Removing the cassette A mechanism assembly (See Fig.24)

- Remove the metal cover and front panel assembly.
  (1) From the inside of the front panel assembly, remove the four screws **W** and screw **X** attaching the cassette A mechanism assembly.
  (2) Disconnect the card wires from the connectors (CN46, CN47) on the cassette A mechanism assembly
  (3) Take out the cassette A mechanism assembly from the front panel assembly.

Reference:
Remove the trans shield as required.

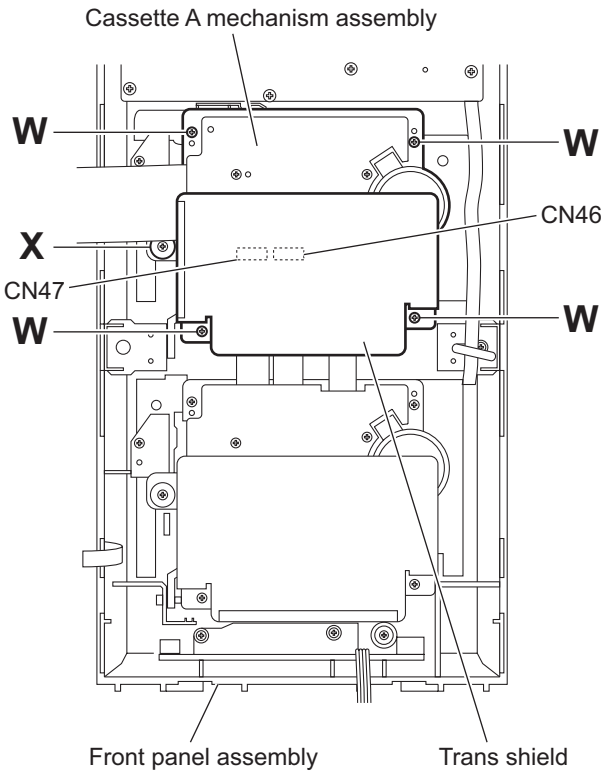

Fig.24

3.1.18 Removing the cassette B mechanism assembly (See Fig.25)

- Remove the metal cover and front panel assembly.
  (1) From the inside of the front panel assembly, remove the four screws **W** and screw **X** attaching the cassette B mechanism assembly.
  (2) Take out the cassette B mechanism assembly from the front panel assembly.
  (3) Disconnect the card wires from the connectors (CN33, CN34) on the cassette B mechanism assembly

Reference:
Remove the trans shield as required.

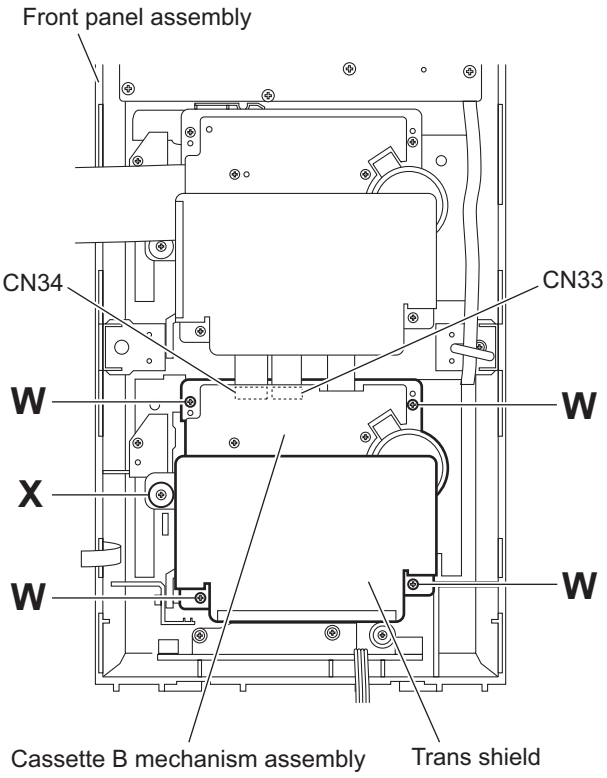

Fig.25

3.1.19 Removing the microphone amplifier board (See Figs.26 and 27)

- Remove the metal cover, front panel assembly and cassette B mechanism assembly.
  (1) From the front side of the front panel assembly, pull out the microphone volume knob. (See Fig.26.)
  (2) From the inside of the front panel assembly, remove the two screws **Y** and remove the support 1 board. (See Fig.27.)
  (3) Remove the screw **Y** and remove the support 2 board. (See Fig.27.)
  (4) Remove the screw **Z** and remove the support 3 board. (See Fig.27.)
  (5) Take out the microphone amplifier board from the front panel assembly.

Reference:

After attaching the microphone amplifier board, fix the card wire with the spacer as before.

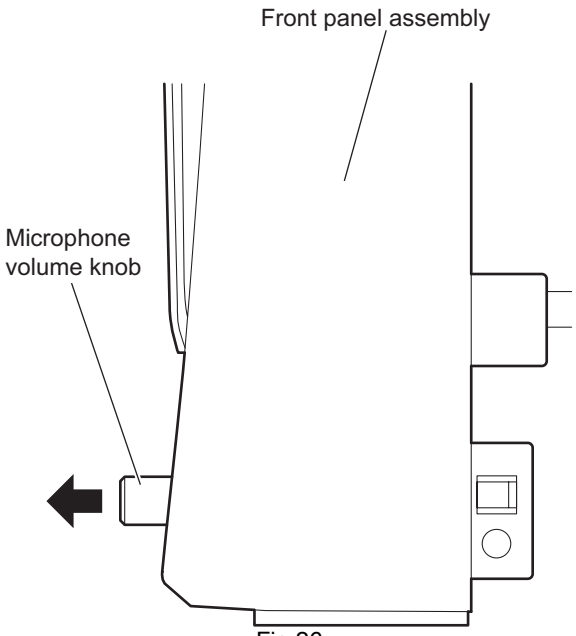

Fig.26

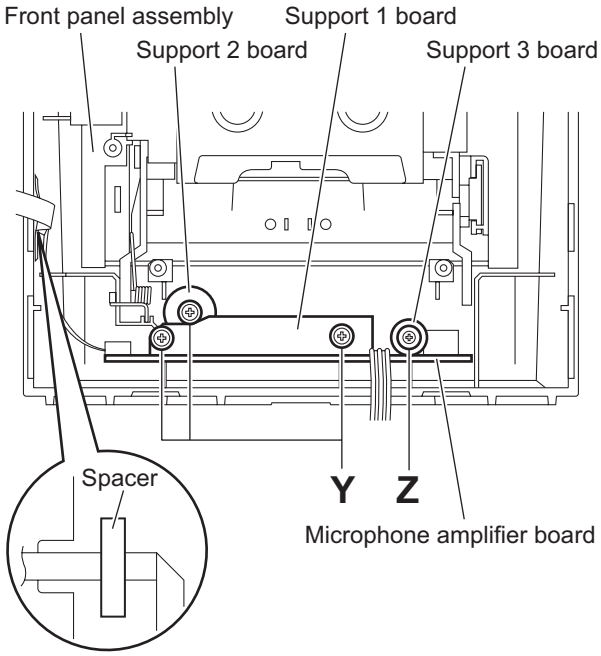

Fig.27

3.2 DVD changer mechanism assembly section

Remove the DVD changer mechanism assembly from the main body. (See "Removing the DVD changer mechanism assembly".)

3.2.1 Removing the tray assemblies (See Figs.1 to 5)

(1) From the top side of the main body, remove the two screws **A** from the top cover and release the two joints **a** on the both sides of the DVD changer mechanism assembly. (See Figs.1 and 2.)

(2) Remove the two rods from the top cover and remove the top cover from the lifter assembly. (See Figs.1 and 2.)

(3) Remove the open det. lever on the left side of the DVD changer mechanism assembly. (See Fig.3.)

(4) From the right side of the DVD changer mechanism assembly, draw out the tray assemblies toward the front while pushing the part **b** of the side (R) assembly. (See Figs.4 and 5.)

Note:
The tray can be locked if all tray assemblies are attached.

(5) From the topside of the DVD changer mechanism assembly, move the stopper tabs **c** in the direction of the arrow and release them. Pull out the tray assemblies from the DVD changer mechanism assembly. (See Fig. 5.)

Note:
Remove the tray assembly from top tray 5 in order.

Reference:
When reattaching the tray assembly, or when removing the disc remaining inside, refer to another section "3.3.15 Taking out the disc in the play mode".

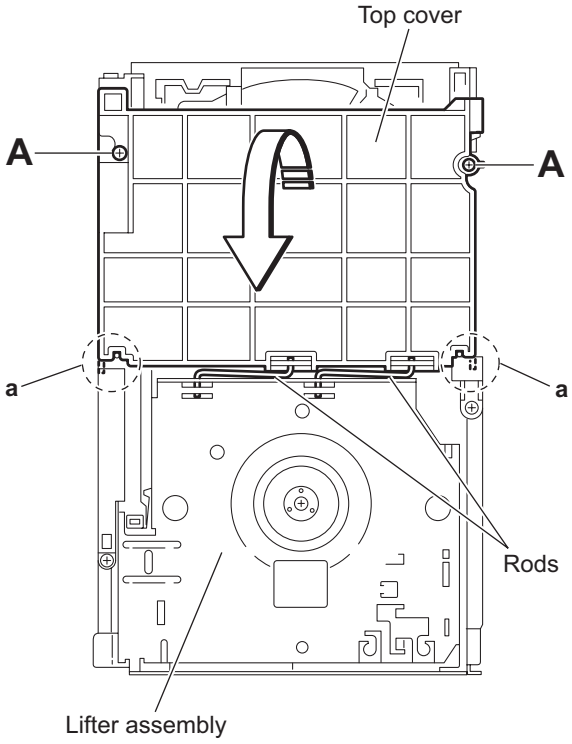

Fig.1

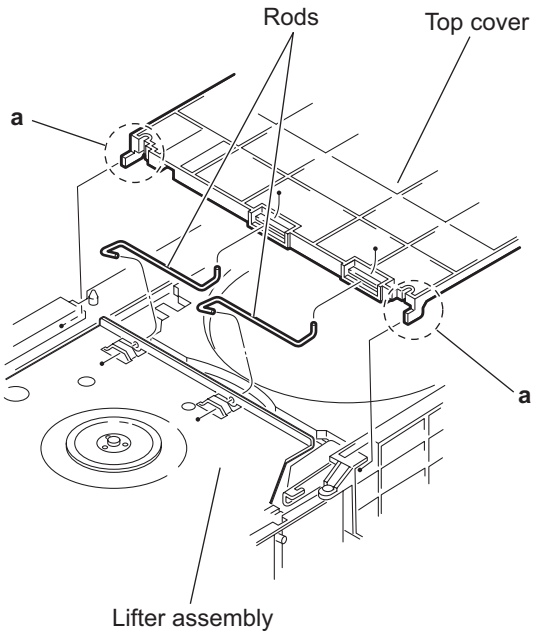

Fig.2

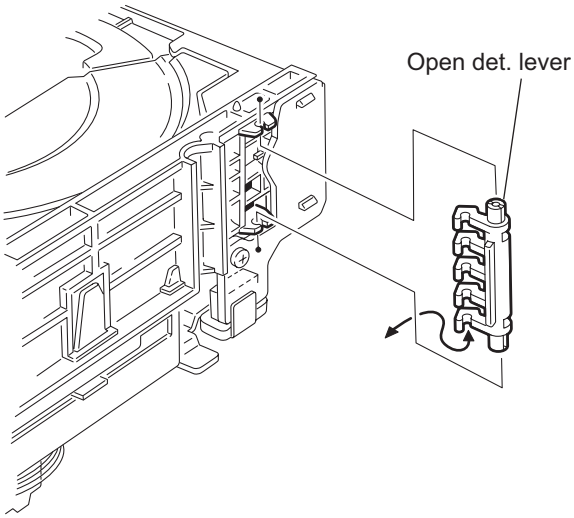

Fig.3

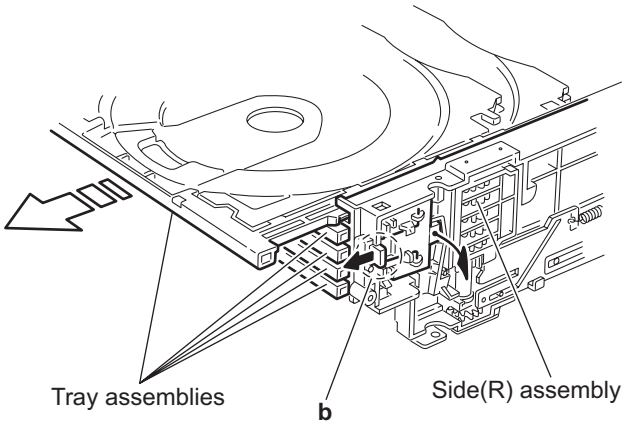

Fig.4

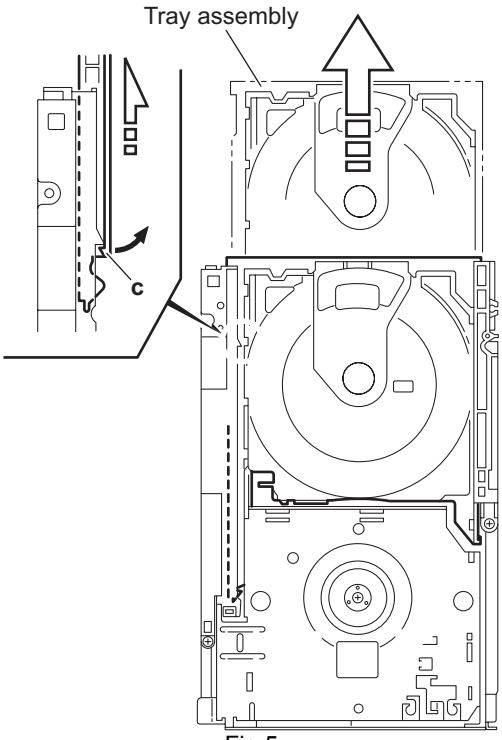

Fig.5

3.2.2 Removing the DVD servo board (See Figs.6 to 8)

Caution:

Solder the short land sections **d** on the DVD pickup before disconnecting the card wire extending from the DVD pickup. If you do not follow this instruction, the DVD pickup may be damaged.

(1) From the topside of the DVD changer mechanism assembly, solder the short land sections **d** on the DVD pick up. (See Fig.6.)

(2) From the bottom side of the DVD changer mechanism assembly, disconnect the card wire from the connectors (CN201, CN451) on the DVD servo board. (See Fig.7.)

Reference:

When connecting the card wire to the connector CN451, pass it through the sections **e** on the DVD traverse mechanism assembly. (See Fig.7.)

(3) Disconnect the wires from the connectors (CN452, CN453) on the DVD servo board. (See Fig.7.)

(4) Remove the two screws **B** attaching the DVD servo board. (See Fig.7.)

(5) From the reverse side of the DVD servo board, release the lock of the connector CN101 in the direction of the arrow and disconnect the card wire. (See Fig.8.)

Caution:

Unsolder the solders from the short land sections **d** after reassembling. (See Fig.6.)

3.2.3 Removing the switch board (See Fig.7)

(1) From the bottom side of the DVD changer mechanism assembly, remove the screw **C** attaching the switch board on the DVD changer mechanism assembly.

(2) Disconnect the wires from the connectors (CN452, CN453) on the DVD servo board.

(3) Release the wires from the section **f** and remove the switch board.

(4) Release the wires from the sections **g** and remove the switch board.

Reference:

When reassembling, pass the wires through the sections (**f**, **g**) as before.

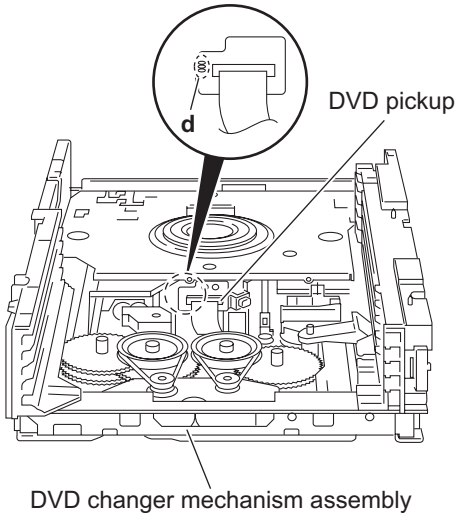

Fig.6

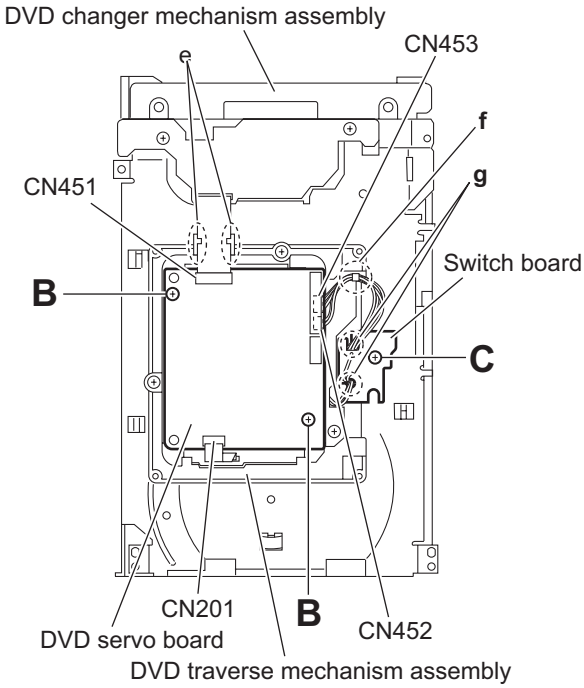

Fig.7

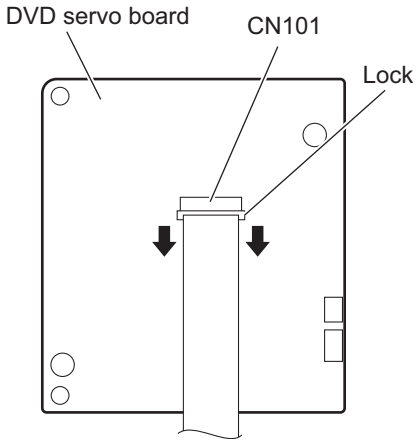

Fig.8

3.2.4 Removing the motor board (See Figs.9 and 10)

(1) From the top side of the DVD changer mechanism assembly, remove the two belts from the motor pulleys. (See Fig.9.)

Note:
Take care not to attach grease on the belt.

(2) Remove the two screws **D** attaching the motors to the loader assembly. (See Fig.9.)

(3) From the bottom side of the DVD changer mechanism assembly, remove the two screws **E**. (See Fig.10.)

(4) Disconnect the connector CN2 on the motor board from the tray switch board and remove the motor board. (See Fig.10.)

(5) Disconnect the card wire from the connector CN1 on the forward side of the motor board. (See Fig.10.)

Note:
When connecting the card wire, let the card wire through the slots **h** of the motor board. (See Fig.10.)

Reference:
You need not to remove the tray assemblies, and in such case, move it.

3.2.5 Removing the motor (See Fig. 10)

- Remove the motor board.

(1) From the reverse side of the motor board, unsolder the four soldered sections **i** on the motor board.

(2) From the forward side of the motor board, remove the motors.

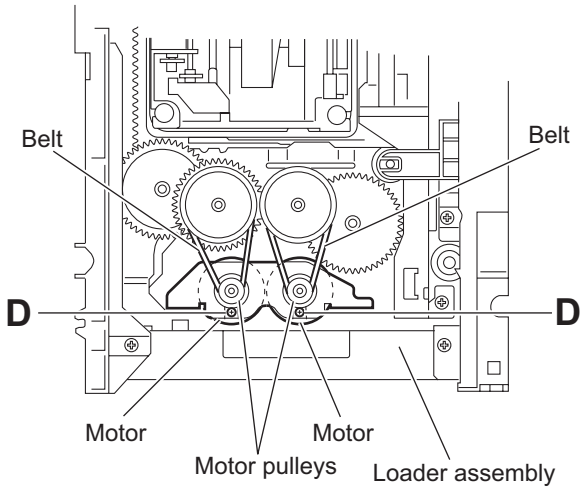

Fig.9

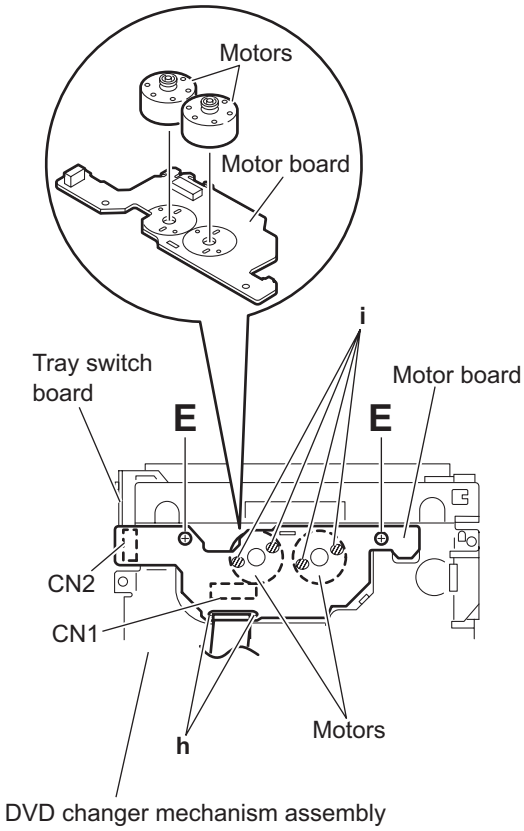

Fig.10

3.2.6 Removing the DVD traverse mechanism assembly (See Fig.11)

- Remove the tray assemblies and DVD servo board.
  (1) From the bottom side of the DVD changer mechanism assembly, remove the three screws **F** attaching the DVD traverse mechanism assembly.
  (2) Remove the wires from the section **j**.
  (3) Take out the DVD traverse mechanism assembly from the DVD changer mechanism assembly.

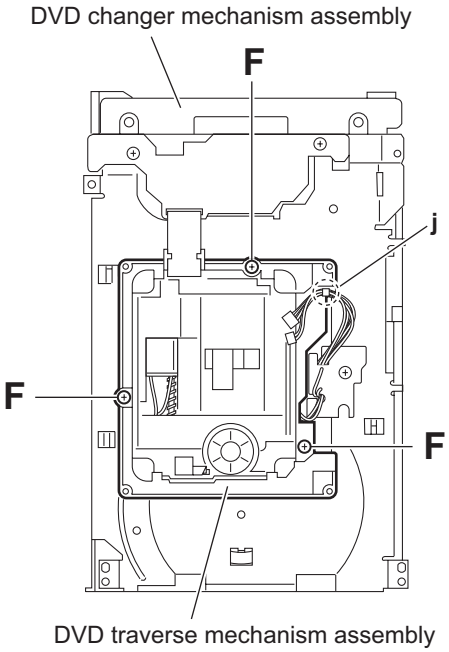

Fig.11

3.2.7 Removing the DVD pickup (See Figs.12 to 14)

- Remove the tray assemblies, DVD servo board and DVD traverse mechanism assembly.
  (1) From the top side of the DVD traverse mechanism assembly, release the lock of the connector on the DVD pickup and disconnect the card wire in the direction of the arrow. (See Fig.12.)
  (2) Turn the screw shaft gear in the direction of the arrow 1 to move the DVD pickup in the direction of the arrow 2. (See Fig.12.)
  (3) Remove the screw **G** attaching the feed bracket and remove the feed bracket from the sections **k**. (See Fig.12.)
  (4) Release the claw **m** of the thrust spring in the direction of the arrow and remove the thrust spring. (See Fig.12.)
  (5) Remove the guide shaft from the sections (**n**, **p**) on the C.TM chassis. (See Fig.13.)
  (6) Remove the section **q** of the DVD pickup. (See Fig.13.)
  (7) Remove the two screws **H** attaching the rack arm spring and rack arm. (See Fig.14.)
  (8) Pull the guide shaft from the DVD pickup in the direction of the arrow. (See Fig.14.)

3.2.8 Attaching the DVD pickup (See Figs.12 to 14)

(1) Attach the guide shaft to the DVD pickup and attach the rack arm spring and rack arm with the screws **H**. (See Fig.14.)
(2) Attach the section **q** of the DVD pickup to the C.TM chassis first and attach the guide shaft to the sections (**n**, **p**). (See Fig.13.)

Reference:
When attaching the guide shaft to the section **p**, attach it under the rod spring. (See Fig.13.)

(3) Attach the thrust spring and feed bracket with the screw **G**. (See Fig.12.)
(4) Turn the screw shaft gear in the direction of the arrow 1 to move the DVD pickup in the direction of the arrow 2. (See Fig.15.)
(5) Connect the card wire to the connector on the DVD pickup. (See Fig.15.)

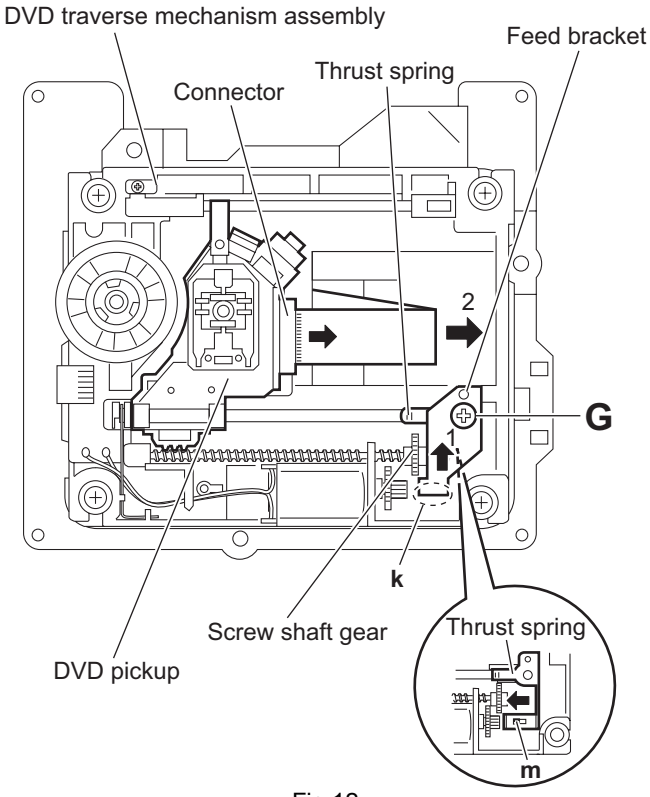

Fig.12

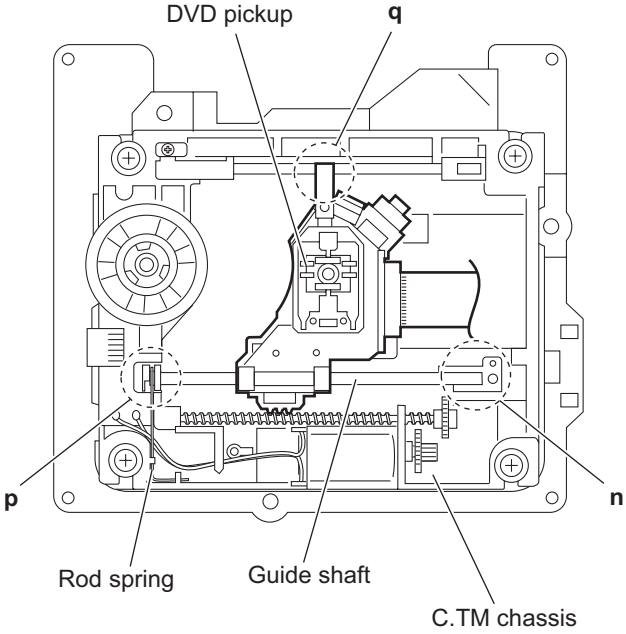

Fig.13

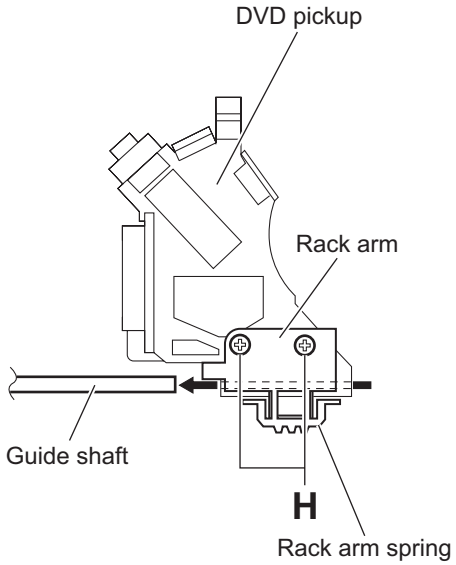
DVD pickup
Rack arm
Guide shaft
H
Rack arm spring
Fig.14

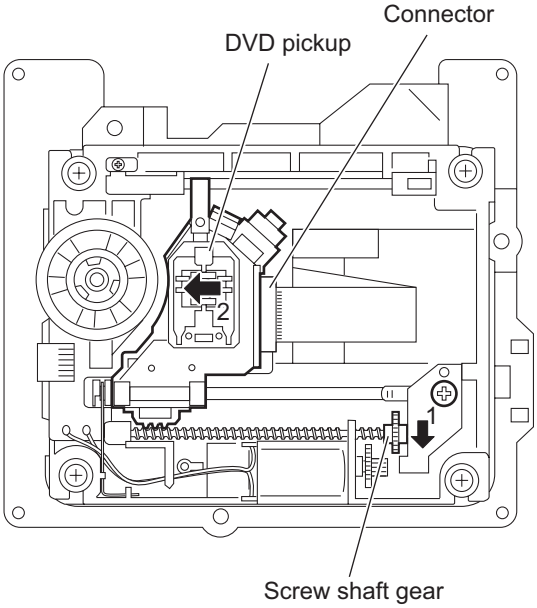
Connector
DVD pickup
2
1
Screw shaft gear
Fig.15

3.2.9 Removing the spindle motor board (See Figs.16 and 17)

- Remove the tray assemblies, DVD servo board and DVD traverse mechanism assembly.
  (1) From the top side of the DVD traverse mechanism assembly, remove the wires from the soldered sections **r** on the spindle motor board. (See Fig.16.)
  (2) From the bottom side of the DVD traverse mechanism assembly, remove the three screws **J** attaching the spindle motor board. (See Fig.17.)

Reference:

When attaching the spindle motor board, let the card wire through the hole **s** on the C.TM chassis. (See Fig.17.)

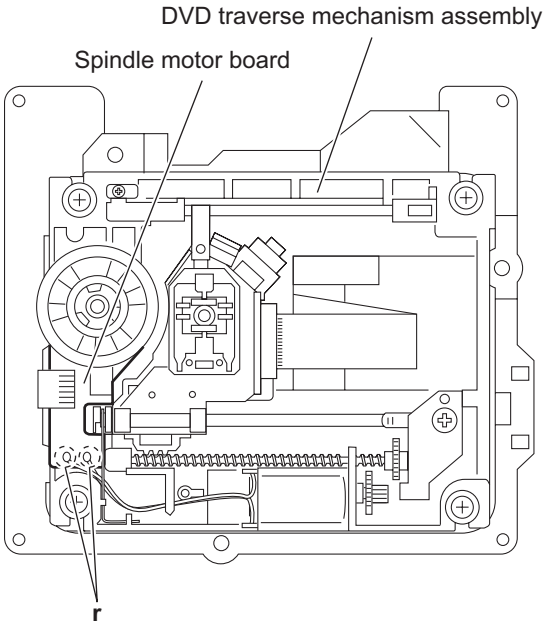

Fig.16

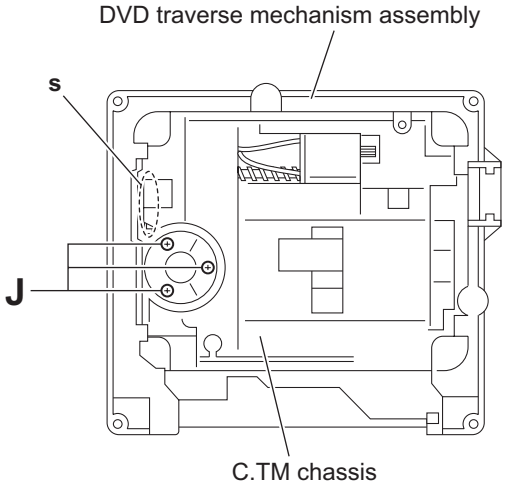

Fig.17

3.2.10 Removing the feed motor (See Figs.18 and 19)

- Remove the tray assemblies and DVD traverse mechanism assembly.
  (1) From the top side of the DVD traverse mechanism assembly, remove the screw **K** attaching the feed bracket and remove the feed bracket from the sections **t**. (See Fig.18.)
  (2) Release the claw **u** of the thrust spring in the direction of the arrow and remove the thrust spring. (See Fig.18.)
  (3) Remove the screw shaft from the section **v** and remove it in the direction of the arrow. (See Fig.19.)
  (4) Remove the middle gear. (See Fig.19.)
  (5) Remove the screw **L** attaching the feed motor to the C.TM chassis. (See Fig.19.)
  (6) Remove the wires from the soldered sections **w** on the spindle motor board. (See Fig.19.)
  (7) Take out the feed motor from the motor base.

Reference:

After attaching the feed motor, pass the wires through the sections **x** on the C.TM chassis as before. (See Fig.19.)

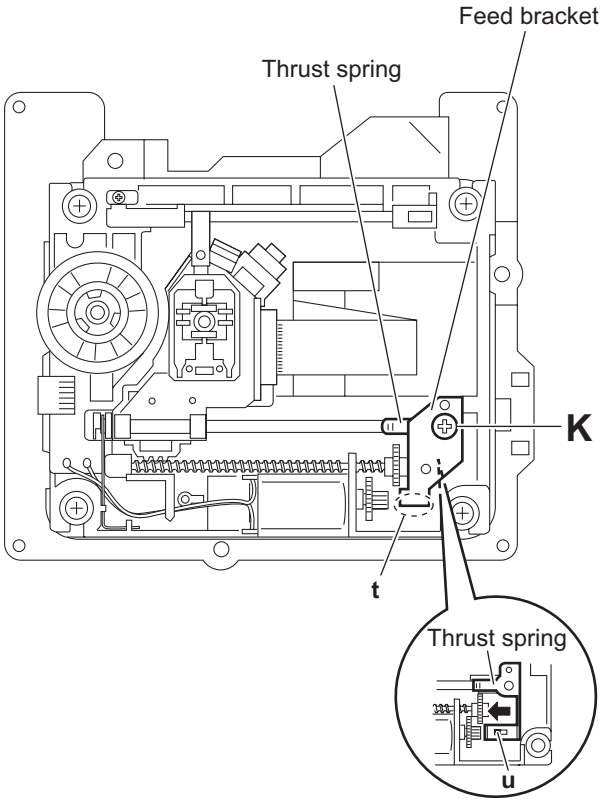

Fig.18

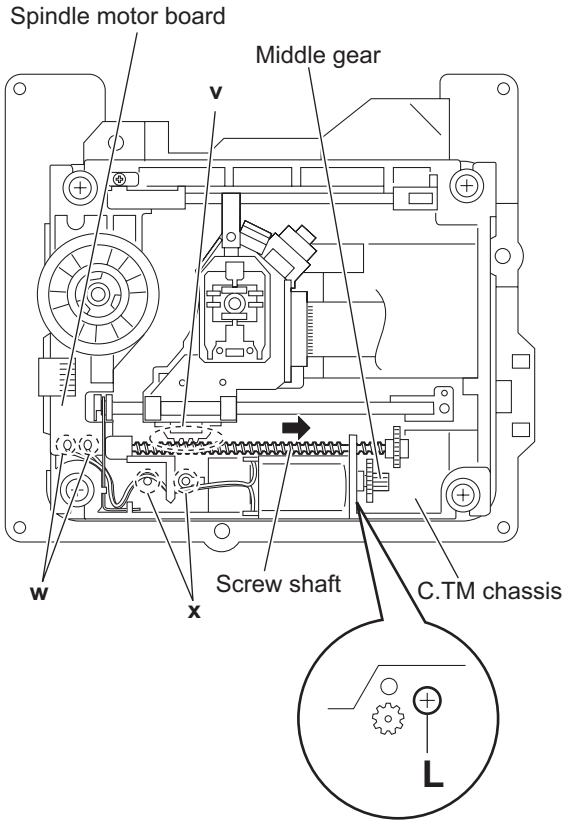

Fig.19

3.2.11 Removing the side (L) and tray switch board (See Figs.20 to 22)

- Remove the tray assemblies.
  (1) From the topside of the DVD changer mechanism assembly, remove the two screws **M** attaching the side (L). (See Fig.20.)
  (2) From the left side of the DVD changer mechanism assembly, disconnect the connector CN3 on the tray switch board from the motor board and detach the side (L) in an upward direction. (See Fig.21.)
  (3) Remove the screw **N** attaching the tray switch board to the side (L). (See Fig.22.)
  (4) Release the joint tab **y** of the side (L) in the direction of the arrow 1 and release the joint tab **z** while removing the tray switch board in the direction of the arrow 2. (See Fig.22.)

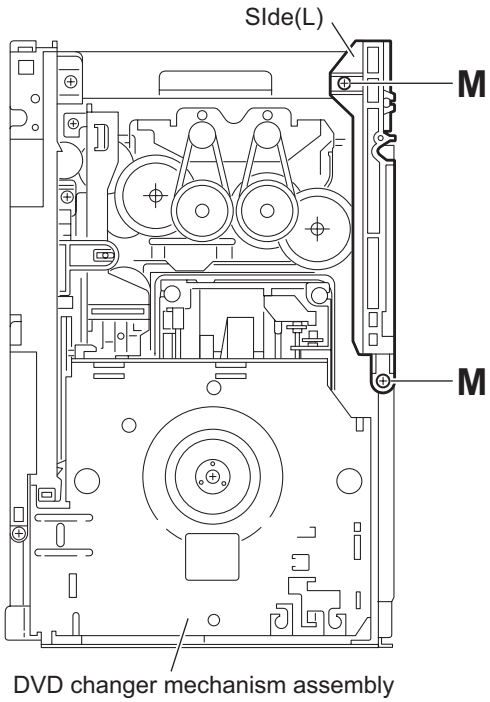

Fig.20

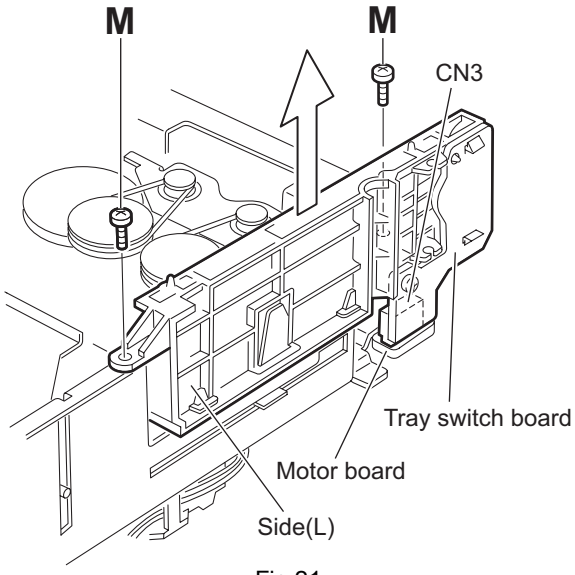

Fig.21

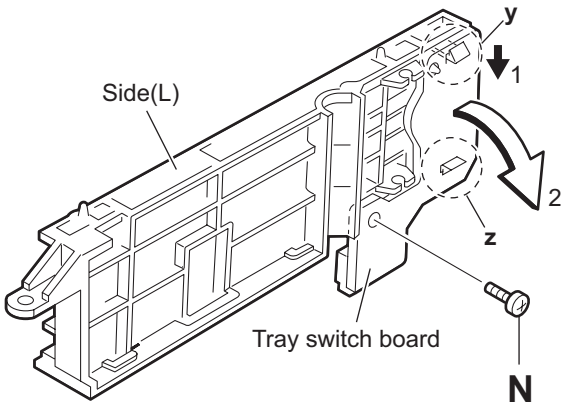

Fig.22

3.2.12 Removing the side (R) assembly (See Fig.23 to 27)

- Remove the tray assemblies and DVD servo board.
  (1) From the inside of the side (R) assembly, release the two tabs **aa** of the gear cover and remove the gear cover outward. (See Figs.23 and 24.)
  (2) From the right side of the DVD changer mechanism assembly, remove the elevator spring attached to the hook **ab** of the loader assembly. (See Figs.24 and 25.)
  (3) From the top side of the DVD changer mechanism assembly, turn the gear 1 clockwise to move the elevator cam rearward. (See Fig.25.)
  (4) Move the two slots **ac** and joint **ad** of the elevator cam and remove the elevator cam outward. (See Fig.25.)
  (5) Remove the three screws **P** and detaches the side (R) assembly upward. (See Figs.26 and 27.)

Note:

When reattaching the side (R) assembly, make sure to fit the shaft (part **ae**) into the slot of the select lever. (See Fig.26.)

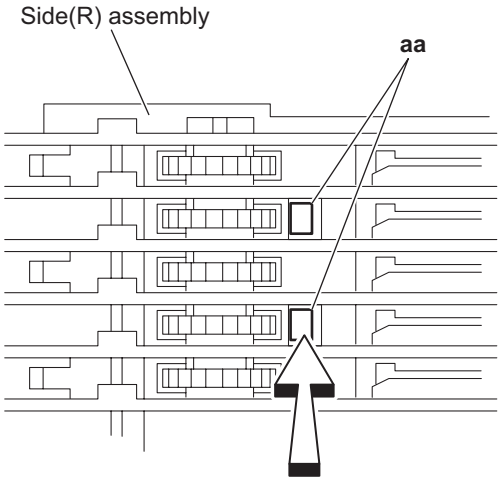

Fig.23

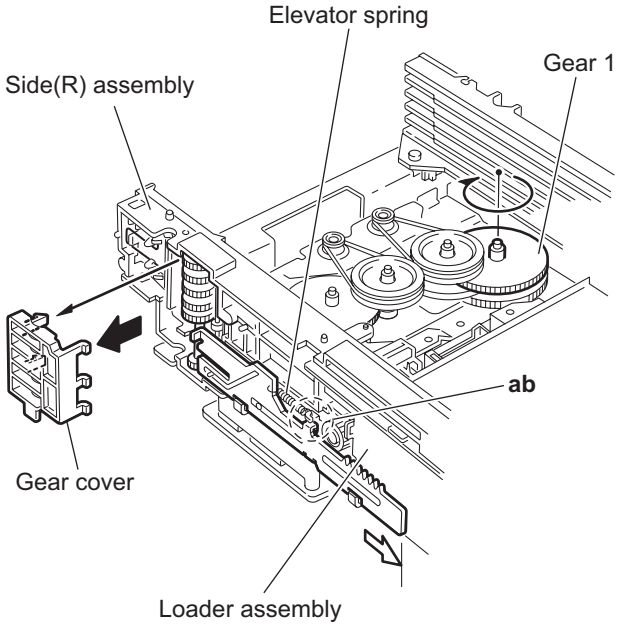

Fig.24

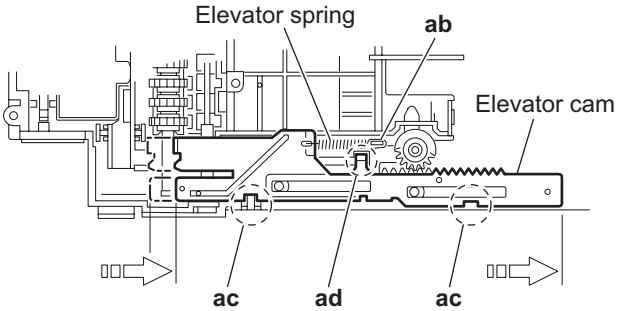

Fig.25

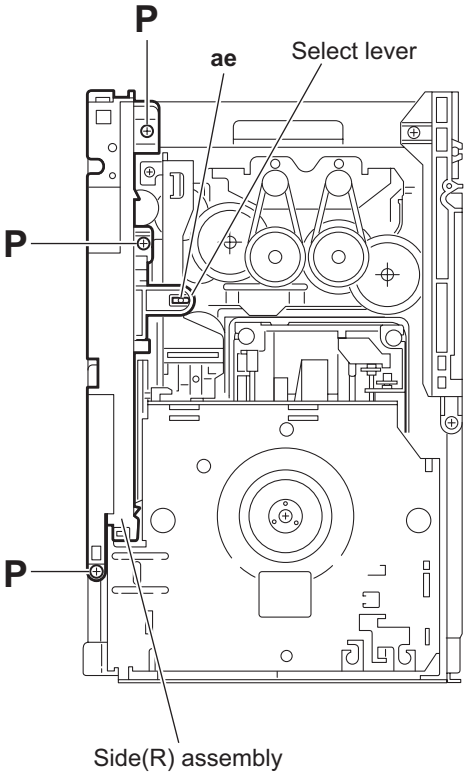

Fig.26

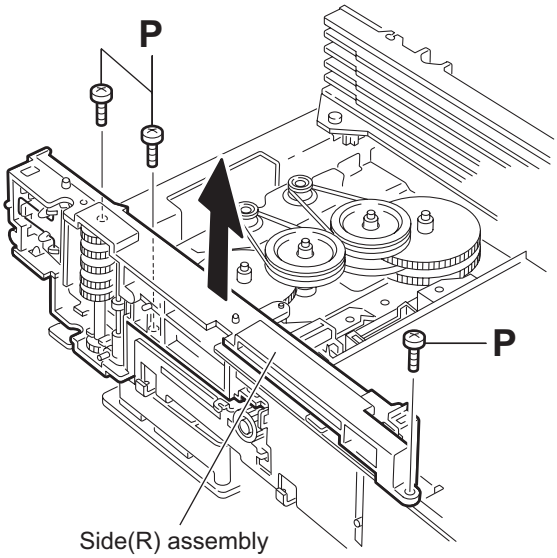

Fig.27

3.2.13 Removing the lifter assembly (See Figs.28 to 32)

- Remove the tray assemblies, DVD servo board, side (L) and side (R) assembly.
  (1) (1) From the top side of the DVD changer mechanism assembly, turn the gear 1 clockwise to move the lifter assembly upward. (See Figs.28 and 29.)
  (2) Turn the gear 2 clockwise to move the hook toward the front until it stops. (See Figs.28 and 29.)
  (3) Move the hook stopper in the direction of the arrow 2 while pushing the tab **af** of the hook stopper to unlock it in the direction of the arrow 1 and release four joints **ag** to detach from the rack holder. (See Fig.30.)
  (4) Release the rod (L) from part **ah**. (See Fig.30.)
  (5) Turn the gear 1 clockwise again to move the lifter assembly upward. (See Fig.31.)
  (6) Remove the lifter assembly from the DVD changer mechanism assembly upward at the positions ai where the four pins on the both sides of the lifter assembly fit to the notches of the loader assembly. (See Fig.31.)
  (7) Move the lifter assembly in the direction of the arrow and release it from the hook. (See Fig.32.)

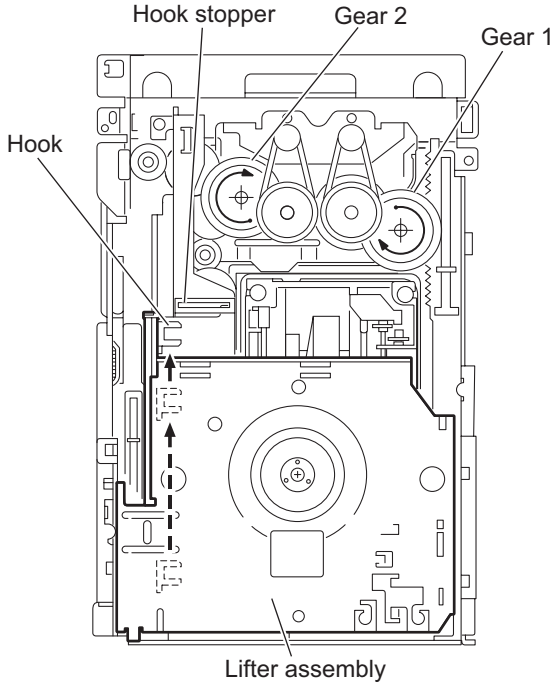

Fig.28

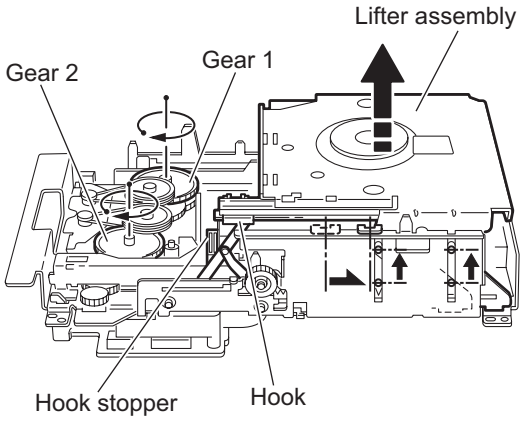

Fig.29

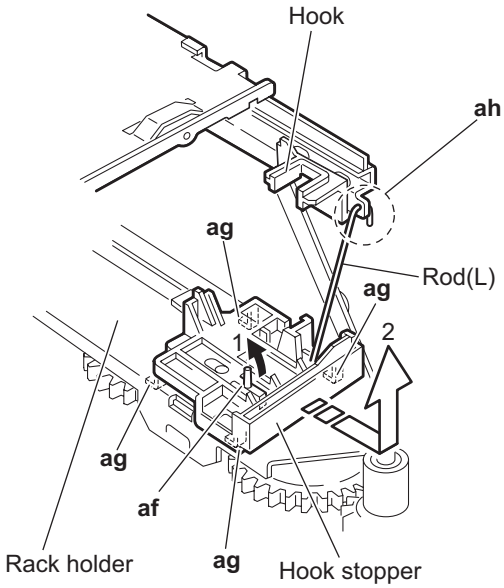

Fig.30

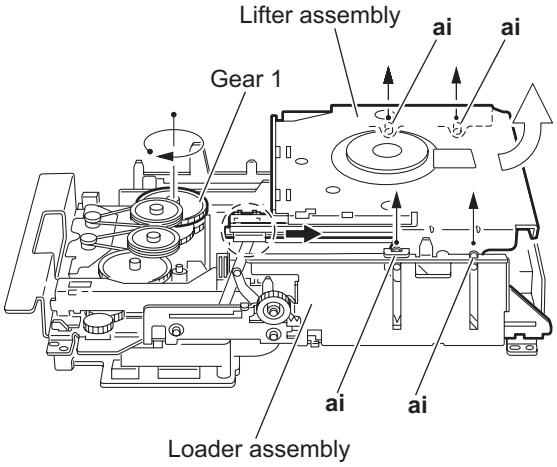

Fig.31

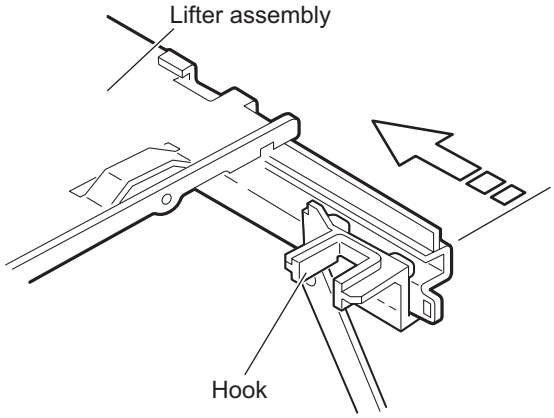

Fig.32

3.2.14 Removing the sensor board and SV resistor (See Fig.33)

- Remove the tray assemblies, side (L), side (R) assembly and lifter assembly.
  (1) Remove the solders from the soldered sections **aj** on the sensor board and remove the wires.
  (2) Remove the two screws **Q** and take out the sensor board with the SV resistor.

Reference:

- Remove the soldered section **ap** on the sensor board as required.
- When reassembling, pass the wires through the slot **ak** of the sensor board as before.

Note:

When reattaching the SV. resister, fit the projection am on the bottom of the SV. resister into slot **an** of the sensor slider.

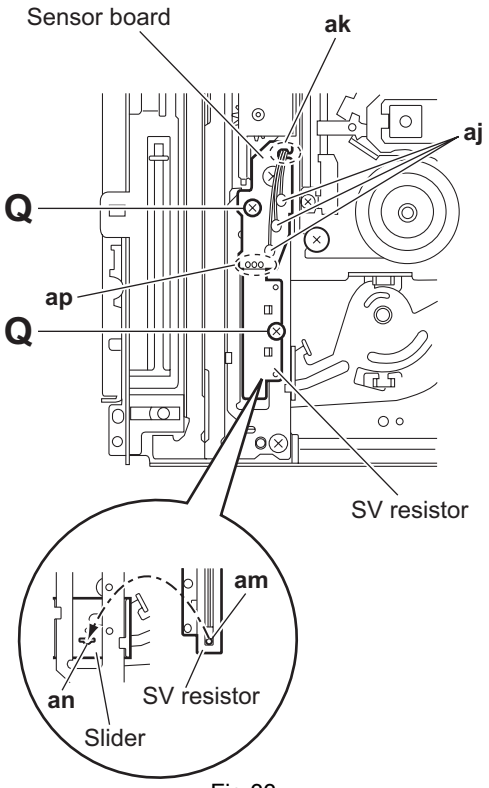

Fig.33

3.2.15 Taking out the disc in the play mode (See Fig.34 to 37)

Reference:

Refer to "3.3.1 Removing the tray assemblies".

(1) From the top side of the DVD changer mechanism assembly, remove the top cover.
(2) Unlock the tray assemblies and draw out the tray assemblies toward the front.
(3) From the top side of the DVD changer mechanism assembly, turn the gear 1 clockwise to move the lifter assembly upward. (See Fig.34.)
(4) Turn the gear 2 clockwise to move the sub tray remaining inside the lifter assembly toward the front, then pull out. (See Fig.34.)
(5) Take out the disc on the sub tray. (See Fig.35.)
(6) After clearing away the disc, insert the sub tray into the main tray. (See Fig.36.)

Note:

When reattaching the sub tray, move the tray stopper on the bottom of the main tray in the direction of the arrow to lock the sub tray certainly. (See Figs.36 and 37.)

(7) Push the tray assembly toward the DVD changer mechanism assembly and reattach.

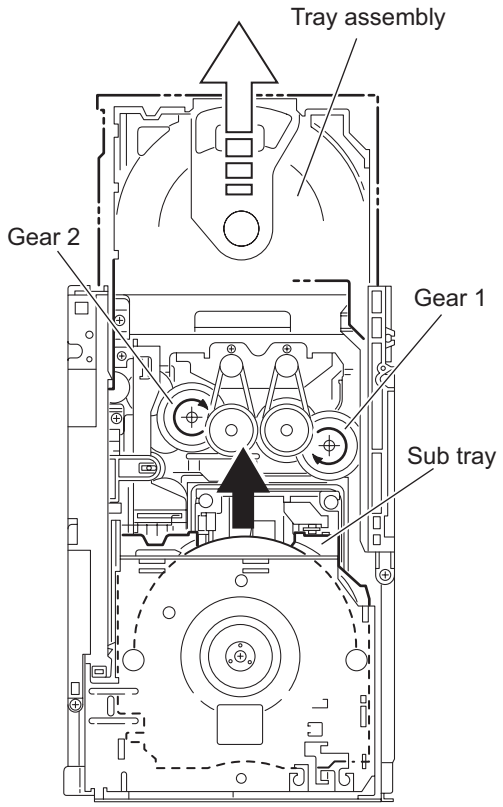

Fig.34

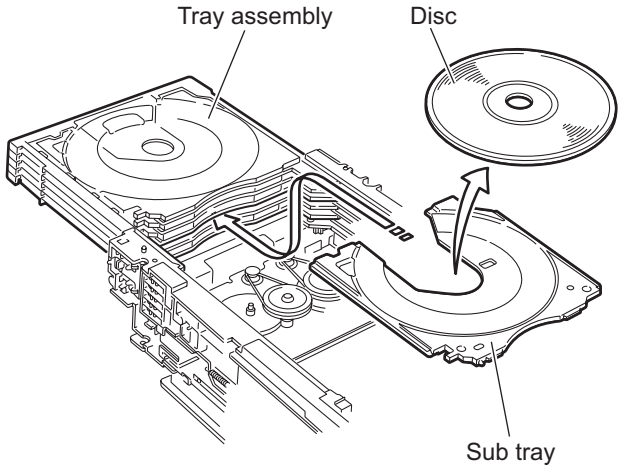

Fig.35

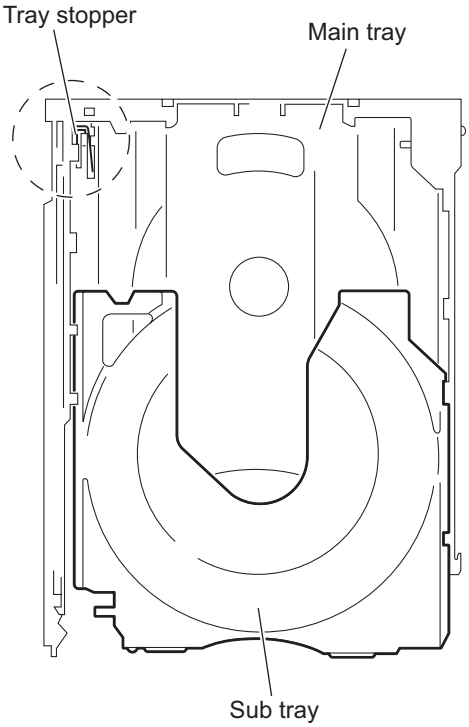

Fig.36

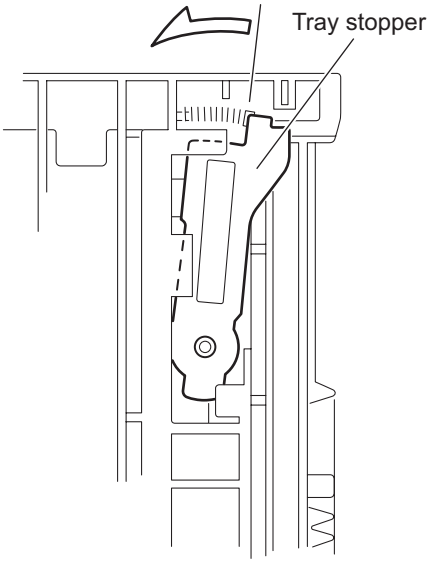

Fig.37

3.3 Cassette mechanism assembly [A MECHA]

3.3.1 Removing the Play head (See Fig.1 to 3)

(1) While moving the trigger arm on the right side of the head mount in the direction of the arrow, turn the flywheel R counterclockwise until the head mount comes ahead and clicks.
(2) The head turns counterclockwise as you turn the flywheel R counterclockwise (See Fig.2 and 3).
(3) Disconnect the flexible wire from connector CN48 on the head amplifier board.
(4) Remove the spring from the back of the head.
(5) Loosen the azimuth screw for reversing attaching the head.
(6) Remove the head on the front side of the head mount.

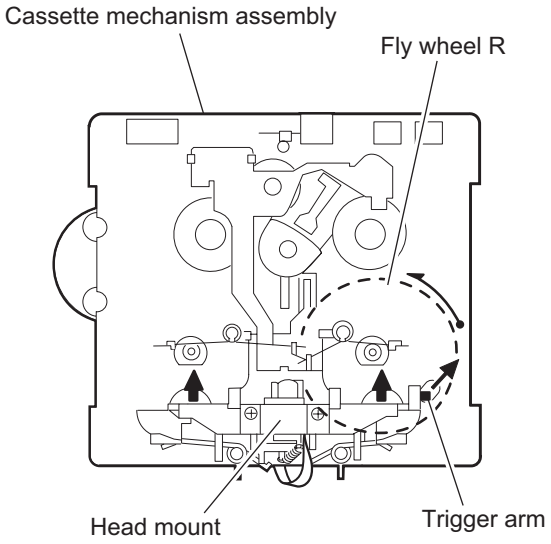

Fig.1

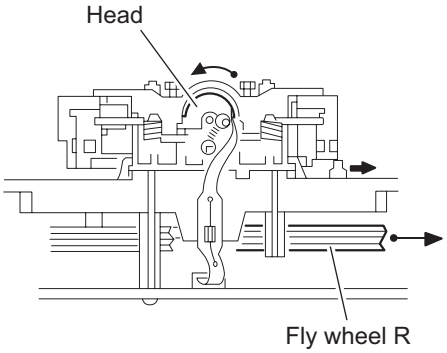

Fig.2

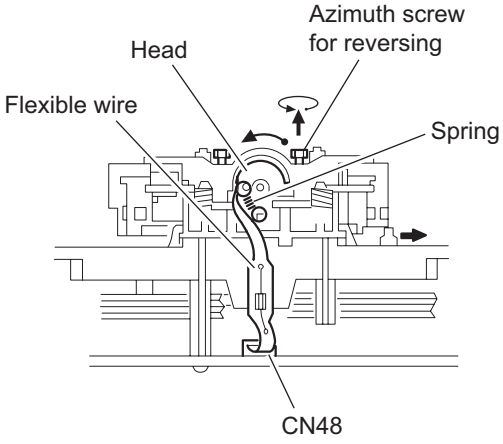

Fig.3

3.3.2 Removing the head amplifier board (See Fig.4)

(1) Turn over the cassette mechanism assembly and remove the three screws **A** attaching the head amplifier board.
(2) (2) Disconnect the flexible wire from connector CN8 on the head amplifier board.
(3) Disconnect connector CN41 of the head amplifier board from connector CN1 on the cassette switch board.

Reference:

If necessary, unsolder the 4-pin wire soldered to the main motor.

3.3.3 Removing the main motor (See Fig.4 to 7)

(1) Remove the two screws **B**.
(2) Half raise the motor and remove the capstan belt from the motor pulley.

Attention:

Be careful to keep the capstan belt from grease. When reassembling, refer to Fig.6 and 7 for attaching the capstan belt.

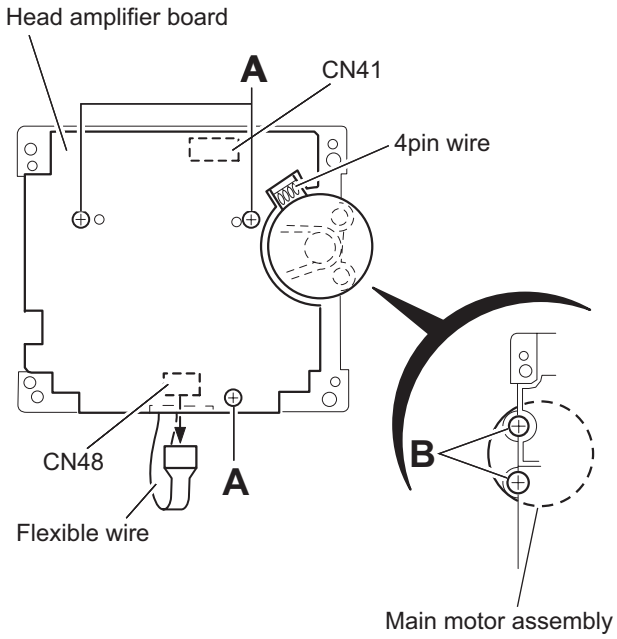

Fig.4

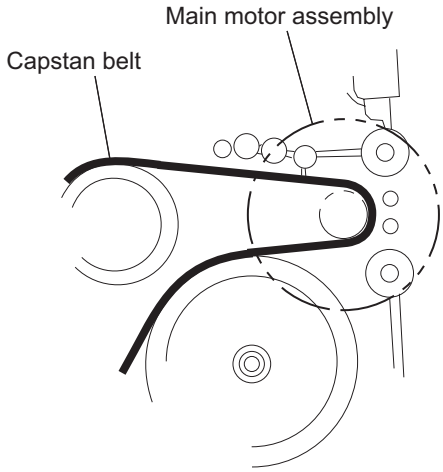

Fig.5

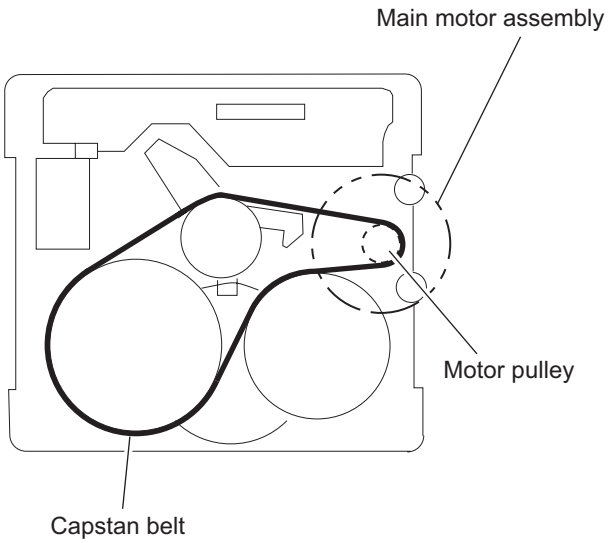

Fig.6

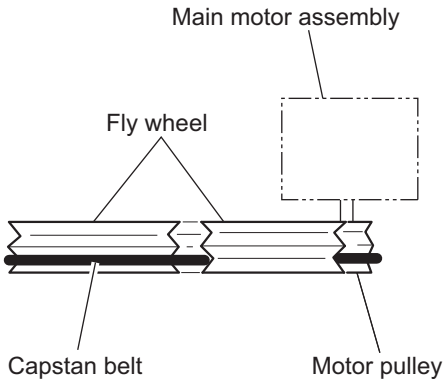

Fig.7

3.3.4 Removing the flywheel (See Fig.8, 9)

- Prior to performing the following procedure, remove the head amplifier board and the main motor assembly.
  (1) From the front side of the cassette mechanism, remove the slit washers attaching the capstan shaft L and R.
  (2) Pull out the flywheels backward.

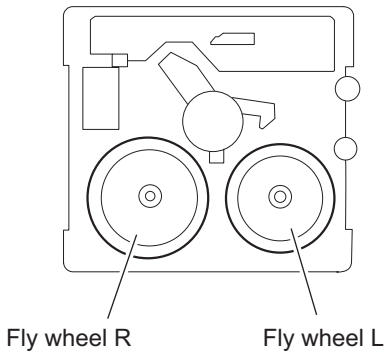

Fig.8

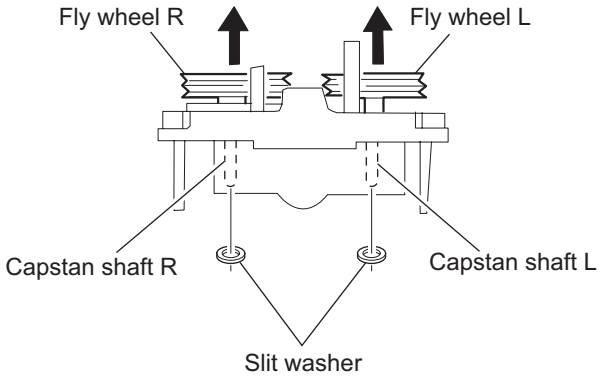

Fig.9

3.3.5 Removing the cassette switch board and solenoid (See Fig.10)

- Prior to performing the following procedure, remove the head amplifier board.
  (1) Remove the screw **C**.
  (2) Release the tab a, b, c, d and e retaining the cassette switch board.
  (3) Release the tab f and g attaching the solenoid on the cassette switch board.
  (4) The cassette switch board and solenoid come off.

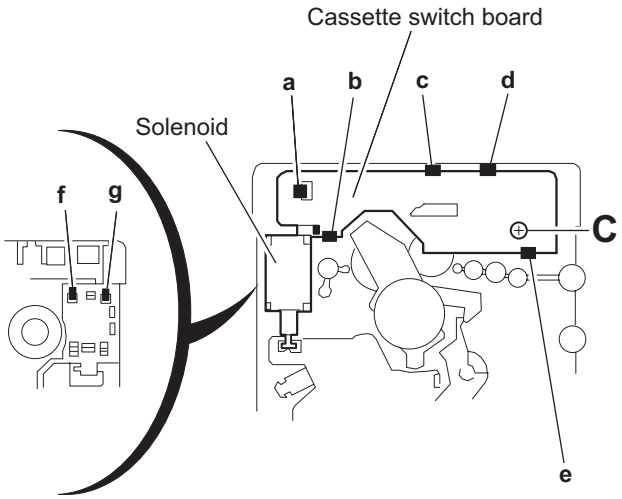

Fig.10

3.3.6 Reattaching the Play head (See Fig.11 to 13)

(1) Reattaching the head mount assembly.
   a) Change front of the direction cover of the head mount assembly to the left (Turn the head forward).
   b) Fit the bosses **O'**, **P'**, **Q'**, **U'** and **V'** on the head mount assembly to the holes **P** and **V**, the slots **O**, **U** and **Q** of the mechanism sub assembly (See Fig.11 to 13).
(2) Tighten the azimuth screw for reversing.
(3) Reattach the spring from the back of the Play head.
(4) Connect the flexible wire to connector CN48 on the head amplifier board.

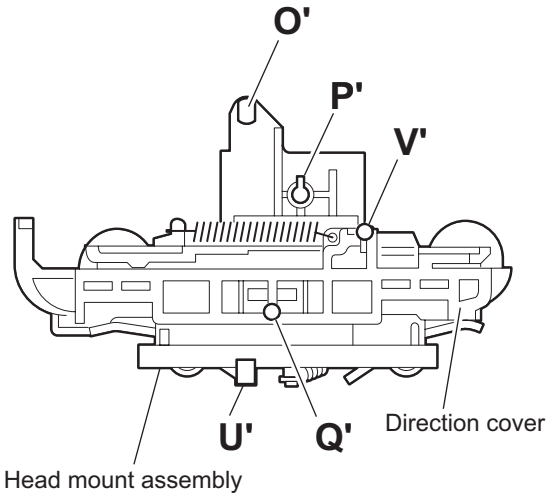

Fig.11

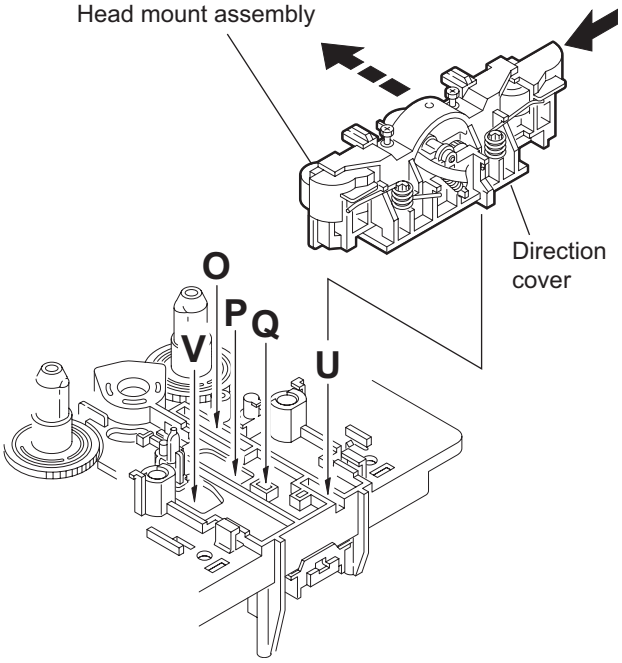

Fig.12

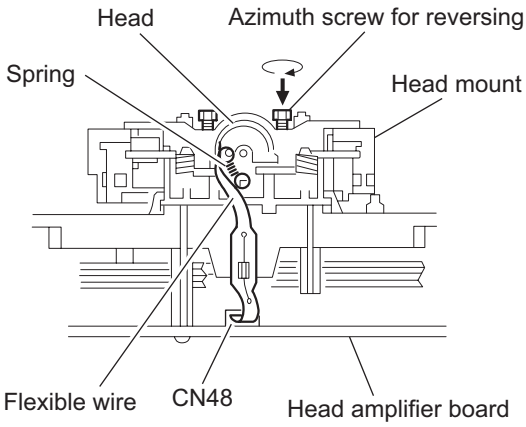

Fig.13

3.4 Cassette mechanism assembly [B MECHA]

3.4.1 Removing the Play/Record & Clear head (See Fig.1~3)

(1) While moving the trigger arm on the right side of the head mount in the direction of the arrow, turn the flywheel R counterclockwise until the head mount comes ahead and clicks.
(2) The head turns counterclockwise as you turn the flywheel R counterclockwise (See Fig.2 and 3).
(3) Disconnect the flexible wire from connector CN31 on the head amplifier & mechanism control board.
(4) Remove the spring from the back of the head.
(5) Loosen the azimuth screw for reversing attaching the head.
(6) Remove the head on the front side of the head mount.

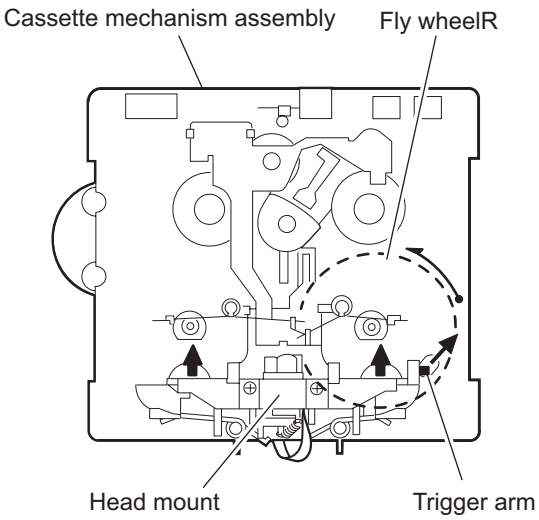

Fig.1

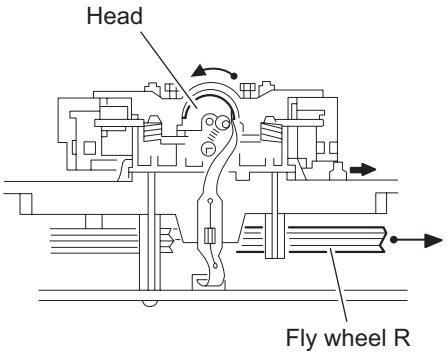

Fig.2

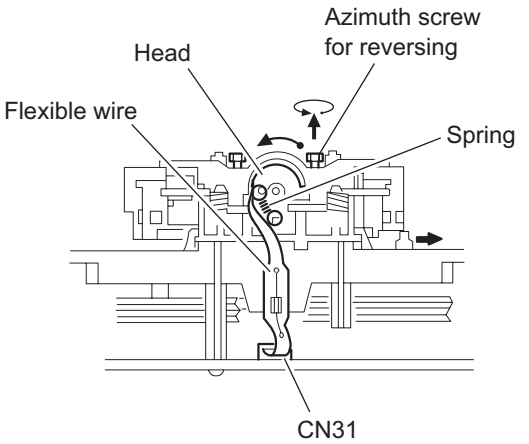

Fig.3

3.4.2 Removing the head amplifier & mechanism control board (See Fig.4)

(1) Turn over the cassette mechanism assembly and remove the three screws **A** attaching the head amplifier & mechanism control board.
(2) Disconnect the flexible wire from connector CN31 on the head amplifier & mechanism control board.
(3) Disconnect connector CN32 of the head amplifier & mechanism control board from connector CN1 on the reel pulse board.REFERENCE: If necessary, unsolder the 4-pin wire soldered to the main motor.

3.4.3 Removing the main motor (See Fig.4~7)

(1) Remove the two screws **B** .
(2) Half raise the motor and remove the capstan belt from the motor pulley.

ATTENTION:

Be careful to keep the capstan belt from grease. When reassembling, refer to Fig.6 and 7 for attaching the capstan belt.

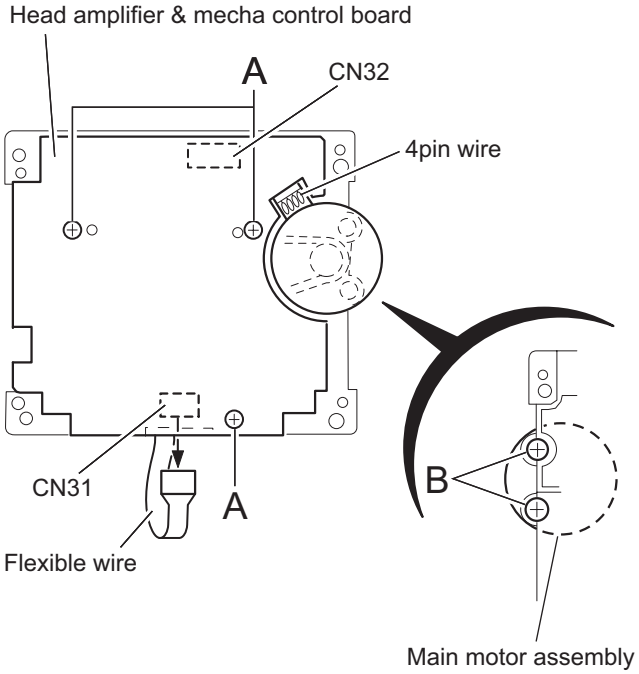

Fig.4

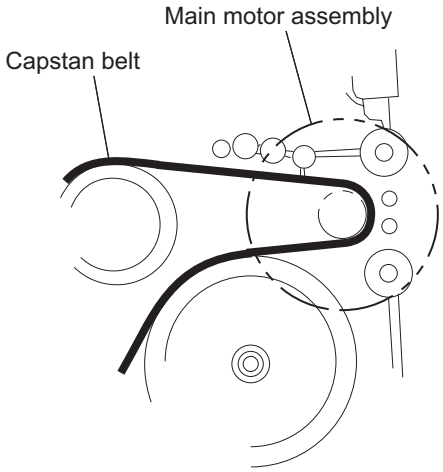

Fig.5

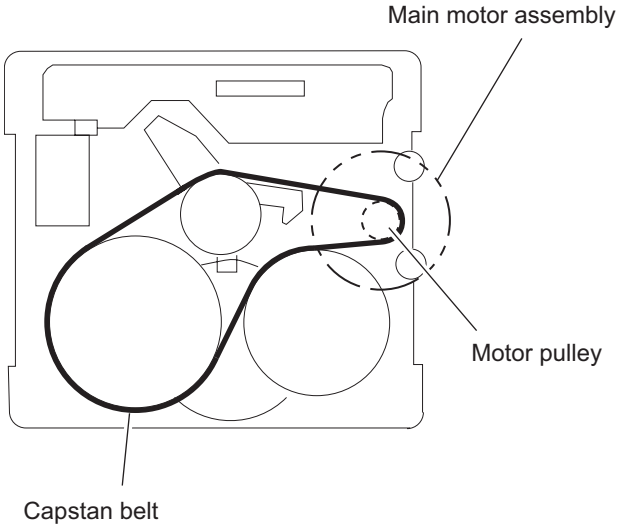

Fig.6

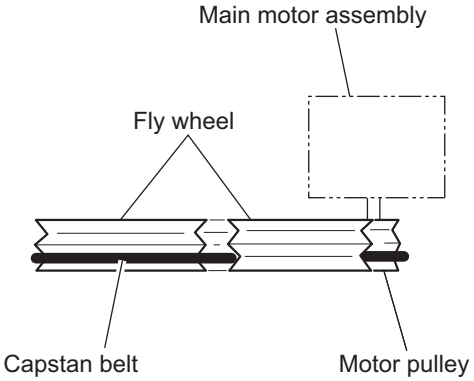

Fig.7

3.4.4 Removing the flywheel (See Fig.8, 9)

- Prior to performing the following procedure, remove the head amplifier & mechanism control board and the main motor assembly.
  (1) From the front side of the cassette mechanism, remove the slit washers attaching the capstan shaft **L** and **R**. Pull out the flywheels backward.

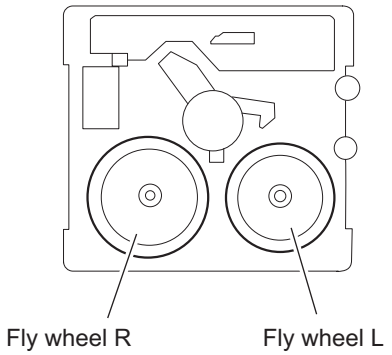

Fig.8

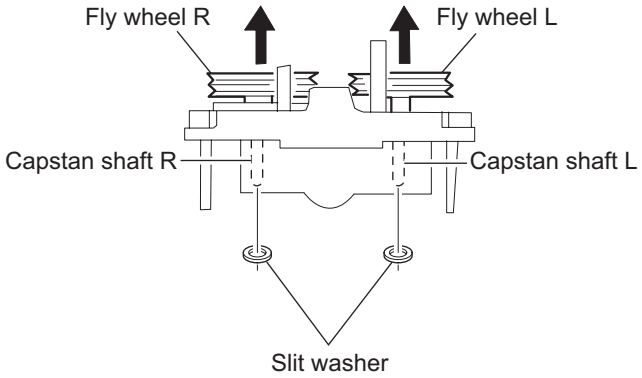

Fig.9

3.4.5 Removing the reel pulse board and solenoid (See Fig.10)

- Prior to performing the following procedure, remove the head amplifier & mechanism control board.
  (1) Remove the screw **C**.
  (2) Release the tab **a**, **b**, **c**, **d** and **e** retaining the reel pulse board.
  (3) Release the tab **f** and **g** attaching the solenoid on the reel pulse board.
  (4) The reel pulse board and the solenoid come off.

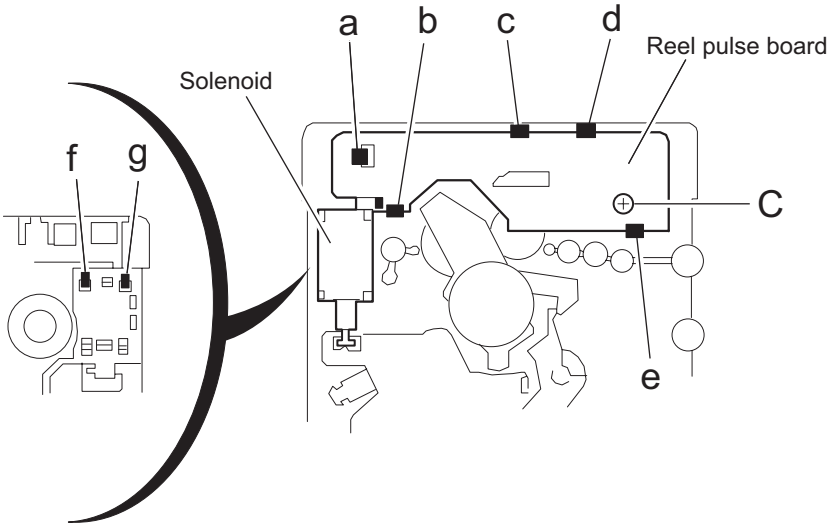

Fig.10

3.4.6 Reattaching the Play/ Record & Clear head (See Fig.11~13)

(1) Reattaching the head mount assembly.

a) Change front of the direction cover of the head mount assembly to the left (Turn the head forward).

b) Fit the bosses **O'**, **P'**, **Q'**, **U'** and **V'** on the head mount assembly to the holes **P** and **V**, the slots **O**, **U** and **Q** of the mechanism sub assembly (See Fig.11 to 13).

CAUTION:

To remove the head mount assembly, turn the direction cover to the left to disengage the gear. If the gear can not be disengaged easily, push up the boss **Q'** slightly and raise the rear side of the head mounts slightly to return the direction lever to the reversing side.

(2) Tighten the azimuth screw for reversing.

(3) Reattach the spring from the back of the Play/ Record & Clear head.

(4) Connect the flexible wire to connector CN31 on the head amplifier & mechanism control board.

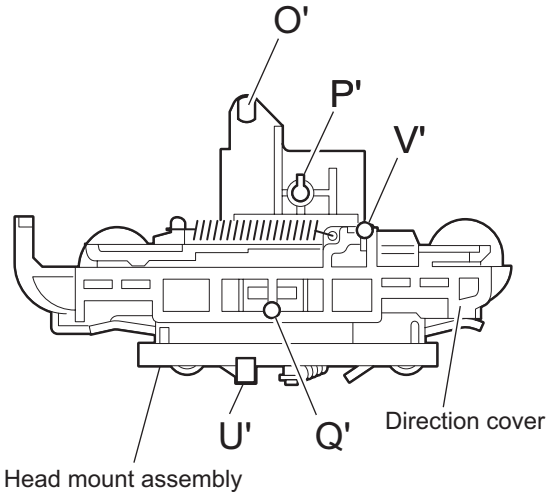

Fig.11

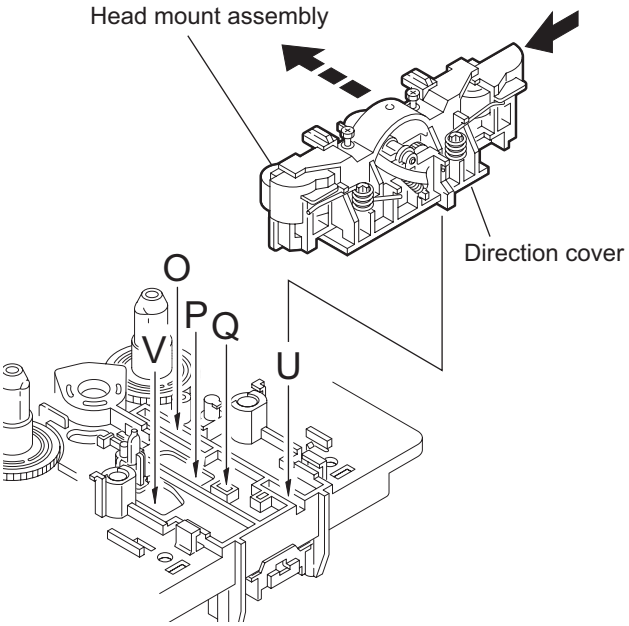

Fig.12

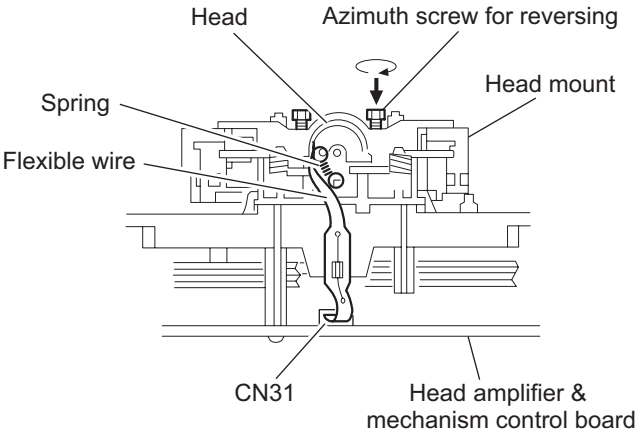

Fig.13

3.5 Speaker section

3.5.1 Removing the speaker net assembly (See Fig.1)

From the front side of the speaker main body, remove the sections **a** of the speaker net assembly toward this side.

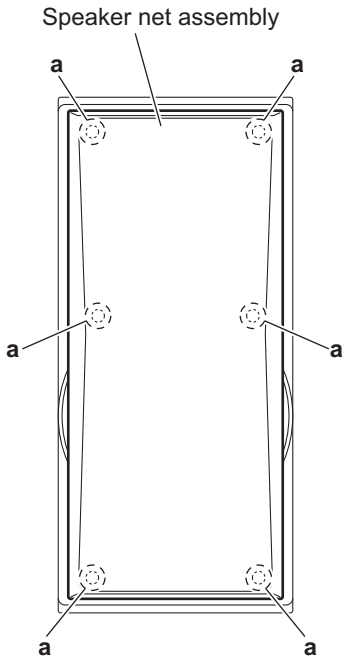

Fig.1

3.5.2 Removing the front panel assembly (See Figs.2 and 3)

- Remove the speaker net assembly as required.
  (1) Insert the tip of a flat-bladed screwdriver or similar tool into the space between the speaker main body and front panel assembly, and lift the front panel assembly little by little to remove the sections **b**. (See Fig.2.)

  Note:
  To prevent damaging the front panel assembly and speaker main body, insert cushioning plates etc. into the space between the speaker main body and front panel assembly.

  (2) From the inside of the front panel assembly, disconnect the wires from the terminals of the tweeter. (See Fig.3.)

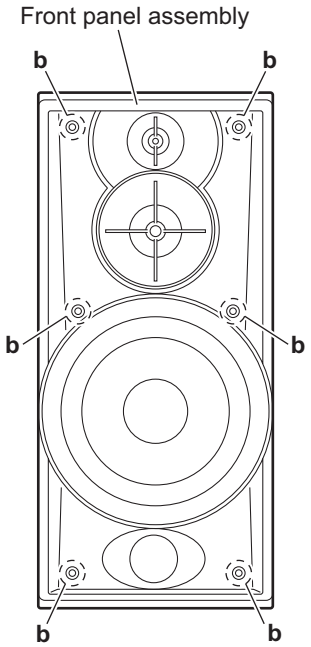

Fig.2

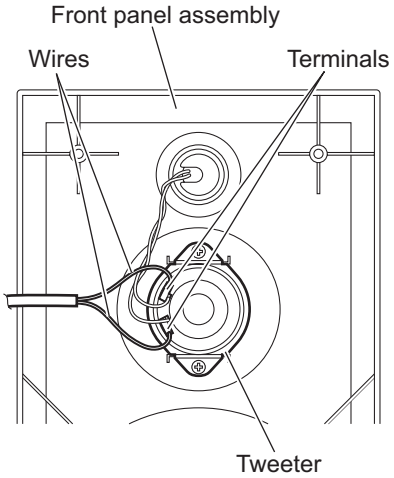

Fig.3

3.5.3 Removing the speaker (See Fig.4)

- Remove the front panel assembly.
  (1) From the front side of the speaker main body, remove the four screws **A** attaching the speaker.
  (2) Take out the speaker from the speaker main body and disconnect the wires from the terminal on the back side of the speaker.

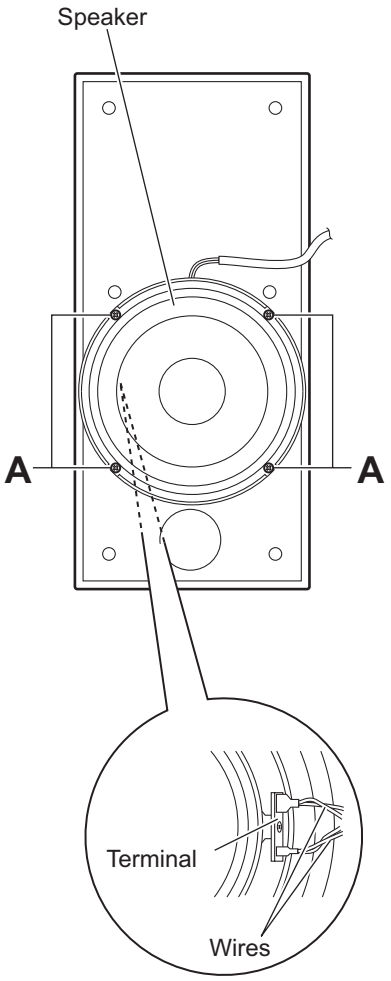

Fig.4

3.6 Subwoofer section (For DX-T9, DX-T7)

3.6.1 Removing the front panel assembly (See Fig.1)

Insert the tip of a flat-bladed screwdriver or similar tool into the space between the subwoofer main body and front panel assembly, and lift the front panel assembly little by little to remove the sections **a**.

Note:

To prevent damaging the front panel assembly and subwoofer main body, insert cushioning plates etc. into the space between the subwoofer main body and front panel assembly.

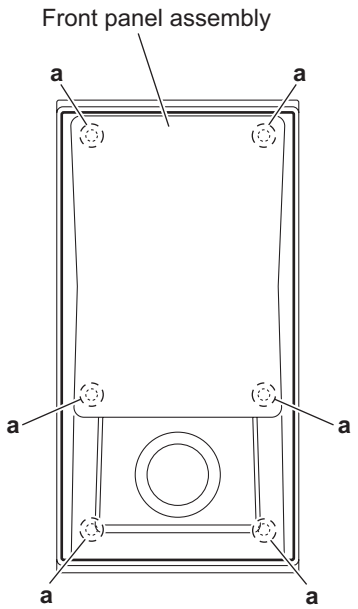

Fig.1

3.6.2 Removing the woofer (See Fig.2)

- Remove the front panel assembly.
  (1) From the front side of the subwoofer main body, remove the six screws **A** attaching the woofer.
  (2) Take out the woofer from the subwoofer main body and disconnect the wires from the terminal on the back side of the woofer.

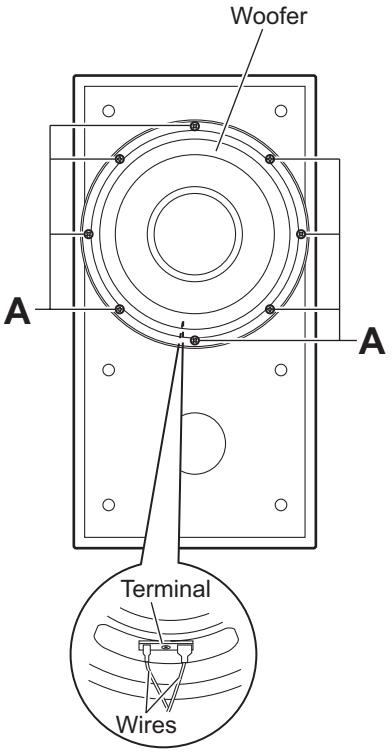

Fig.2

SECTION 4
ADJUSTMENT

4.1 Adjustment method

4.1.1 Measurement Instruments Required for Adjustment

(1) Low frequency oscillator
This oscillator should have a capacity to output 0dBs to 600Ω at an oscillation frequency of 50Hz-20kHz.
(2) Attenuator impedance : 600Ω
(3) Electronic voltmeter
(4) Distortion meter
(5) Frequency counter
(6) Wow & flutter meter
(7) Test tape
VT703 : Head azimuth
VT712 : Tape speed and running unevenness(3kHz)
VT724 : Reference level (1kHz)
(8) Blank tape
TYPE I: AC-225
TYPE II: AC-514
(9) Torque gauge : For play and back tension
FWD(TW2111A), REV(TW2121a) and
FF/REW(TW2231A)
(10) Test disc: VT-501, CTS-1000

4.1.2 Measurement conditons

Power supply voltage:
AC110V / AC127V / AC220VAC230V ~ AC240V
(Adjustable with the voltage selector)50Hz / 60Hz

Reference output:	Speaker : 0.775V/4Ω Headphone : 0.077V/32Ω
Reference frequency and input level:	1kHz, AUX : -8dBs
Measurement output terminal:	at Speaker J200
Load resistance:	4Ω

4.1.3 Radio Input signal

AM frequency:	400Hz
AM modulation:	30%
FM frequency:	400Hz
FM frequency deviation:	22.5kHz

4.1.4 Tuner section

FM Band cover:	87.5 - 108.0MHz
AM Band cover:	531 - 1,710kHz (at 9kHz) 530 - 1,710kHz (at 10kHz)
Voltage applied to tuner:	+B : DC5.7V VT : DC 12V
Reference measurement output:	26.1mV(0.28V)/3Ω
Input positions:	AM : Standard loop antenna FM : TP1 (hot) and TP2 (GND)

4.1.5 Standard measurement position of volume

Function switch	to Tape
Beat cut switch	to Cut
Super Bass/Active hyper Bass	to OFF
Bass Treble	to Center
Adjustment of main volume to reference output	VOL : 28

Precautions for measurement

(1) Apply 30pF and 33kΩ to the IF sweeper output side and 0.082μ F and 100kΩ in series to the sweeper input side.
(2) The IF sweeper output level should be made as low as possible within the adjustable range.
(3) Since the IF sweeper is a fixed device, there is no need to adjust this sweeper.
(4) Since a ceramic oscillator is used, there is no need to perform any MIX adjustment.
(5) Since a fixed coil is used, there is no need to adjust the FM tracking.
(6) The input and output earth systems are separated. In case of simultaneously measuring the voltage in both of the input and output systems with an electronic voltmeter for two channels, therefore, the earth should be connected particularly carefully.
(7) In the case of BTL connection amp., the minus terminal of speaker is not for earthing. Therefore, be sure not to connect any other earth terminal to this terminal. This system is of an BTL system.
(8) For connecting a dummy resistor when measuring the output, use the wire with a greater code size.
(9) Whenever any mixed tape is used, use the band pass filter (DV-12).

4.2 Cassette mechanism adjustment

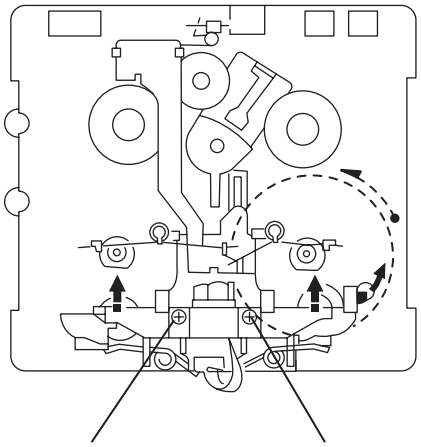

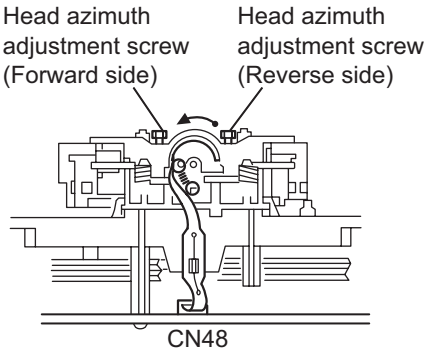

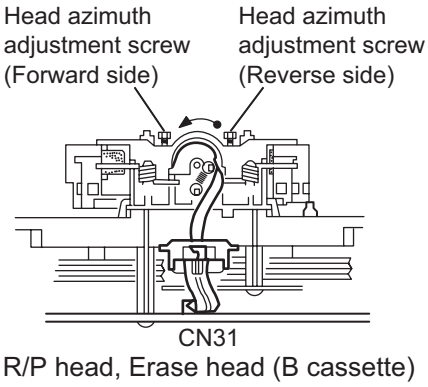

Cassette switch board

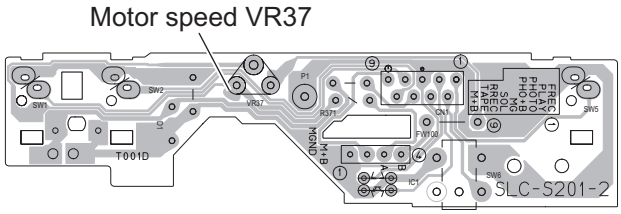

Head amplifier board

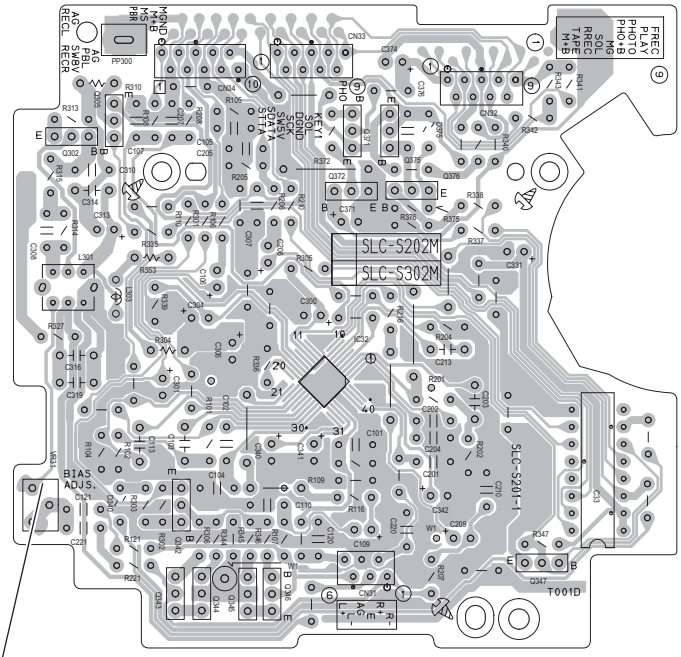

BIAS adjust VR31 (Only B cassette mechanism)

4.2.1 Mechanism section

Item	Condition	Measurement method	Ref.value	Adjustment position
Head azimuth	Test tape : VT703L (8kHz) Output terminal : Speaker out	1. Playback the test tape VT703L (8kHz). 2. Adjust to maximum output level by azimuth adjustment screw for forward side and reverse side. 3. This adjustment is adjust by adjustment screw of forward side and adjustment screw of reverse side.	Maximum output	Only adjust at changed head
Tape speed	Test tap : VT712 (3kHz) Output terminal : Speaker out or Headphone out	Playback the test tape VT712 (3kHz) at end of forward side, adjust to 2,940~3,90Hz indication of frequency counter by VR37.	2,940 to 3,090Hz	VR37

Item	Condition	Measurement method	Ref.value	Adjustment position
Tape speed deviation at FWD/REV	Test tape : VT712 (3kHz) Output terminal : Speaker out or Headphone out	Playback the test tape VT712 (3kHz) at end of forward and reverse, tape speed deviation should be less than 6.0Hz.	Less than 6.0Hz	VR31
Wow & Flutter	Test tape : VT712 (3kHz) Output terminal : Speaker out or Headphone out	Playback the test tape VT712 (3kHz) at start of forward and reverse, Wow & Flutter are should be less than 0.25% (WRMS).	Less than 0.25% (WRMS)	

4.2.2 Electrical adjustment

Item	Condition	Measurement method	Ref.value	Adjustment position
Recording BIAS adjustment	・Forward or Reverse ・Test tape :AC-514 TYPE Ⅱ :AC-225 TYPE Ⅰ ・Output terminal Recording head	1. Set the test tape(AC-514 TYPEⅡ and AC-225 TYPEⅠ), then make REC/PAUSE condition. 2. Connect 100Ω to recording head by series, then connect to VTVM for measurement the current. 3. After setting, start the recording by release the PAUSE, in this time bias current adjust to next fig. by VR31 for Lch and VR32 for Rch. 4.0uA (TYPE Ⅱ) and 4.20uA (TYPEⅠ).	AC-225 :4.20uA AC-514 :4.0uA	VR31
R/P playback frequency response	・Reference frequency : 1kHz / 10kHz (Reference: -20dB) ・Test tape : AC-514 TYPEⅡ ・Input terminal playback frequency response	1. Set the test tape (AC-514 TYPEⅡ), then make REC/PAUSE condition. 2. Release the PAUSE, then start recording the 1kHz and 10kHz of reference frequency from oscillator. 3. Playback the recorded position, 1kHz and 10kHz output deviation should -1dB±2dB to readjust by VR31 for Lch and VR32 for Rch.	Output deviation 1kHz/10kHz :-1dB±2dB	VR31

4.2.3 Electrical response confirmation

Item	Condition	Measurement method	Ref.value	Adjustment position
Recording bias current	Forward or Reverse ・Test tape : TYPEⅡ (AC-514) ・Measurement terminal : BIAS test point on printed circuit board	1. Change BIAS1 and 2, confirm the frequency should be change. 2. Set the test tape (AC-514 TYPEⅡ), then make REC/PAUSE condition. 3. Confirm the frequency should 100Hz±6kHz at BIAS test point on printed circuit board.	100 kHz ±6 kHz	
Erase current (reference value)	Forward or Reverse ・Rec condition ・Test tape : AC-514 TYPEⅡ : AC-225 TYPE Ⅰ ・Measurement terminal : Both side of Erase head	1. Set the test tape (AC-514 TYPE Ⅱ and AC-225 TYPE Ⅰ), then make REC/PAUSE condition. 2. Release the PAUSE to REC condition, connect 1W to ERASE head by series, then confirm the erase current at both side of erase head.	TYPE Ⅱ : 120 mA TYPEⅠ : 75 mA	

4.3 Service mode

4.3.1 Confirming contents

(1) Tuner AM switch to 9kHz-step
(2) Tuner AM switch to 10kHz-step
(3) Tray lock
(4) Cold start
(5) Clock fast forwarding
(6) Compulsion NTSC mode
(7) Fan ON/OFF setting
(8) Volume large step change
(9) Micon version display
(10) LCD all segment blinking
(11) Tuner version
(12) DVD test mode
(13) DVD initialize
(14) DVD region confirm mode

4.3.2 Confirming methods

1. Tuner AM switch to 9kHz-step
   AM frequency change to 9kHz at U-version.

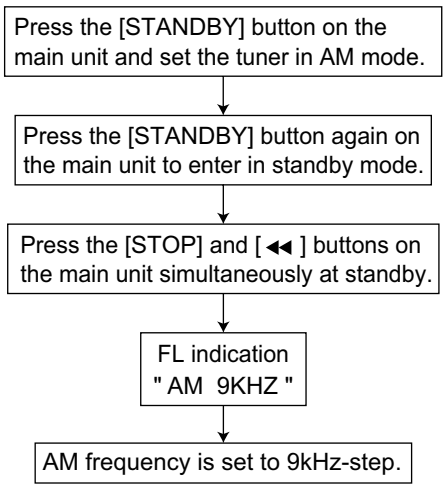

2. Tuner AM switch to 10kHz-step
   AM frequency change to 10kHz at U-version.

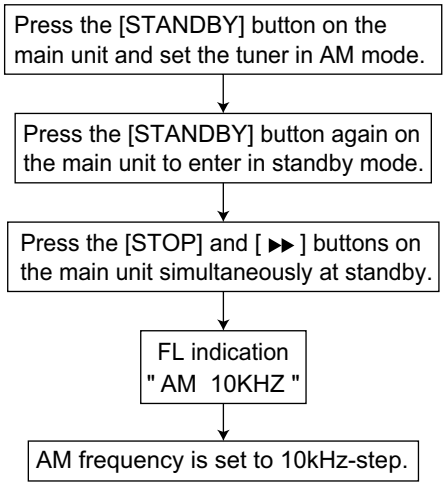

3. Tray lock
   Loader-mecha is locked.
   EJECT processing isn't done by pushing EJECT key at tray lock on state.
   Then display to LOCKED / UNLOCKED.
   EJECT 1 is pushed , pushing STOP again , tray lock is off.
   Back up to tray locked ON/OFF.

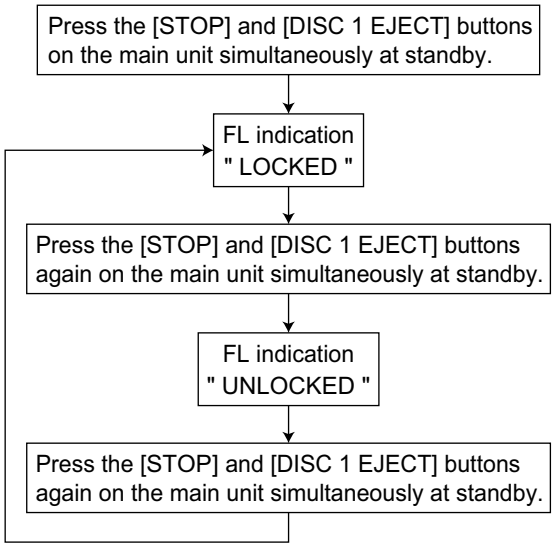

4. Cold start
Cold start processing.
After cold start is activated, LCD 8 Segment temporary display 'COLD' for 2 seconds. Then return to previous display.
To activate cold start AC OFF system, then AC ON again.

Press the [STANDBY], [ENTER] and [0] keys on the remote controller simultaneously at standby.
↓
FL indication " COLD "
↓
Cold start is completed.

5. Clock fast forwarding
Fast Forward Clock (Increase clock counter speed)
Can only be activated after SYSTEM Clock is set.
To exit this TEST mode, AC OFF the system, then AC ON again.

Press the [STANDBY], [ENTER] and [2] keys on the remote controller simultaneously in power on state.
↓
This mode is completed.

6. Compulsion NTSC mode
Into the compulsive NTSC mode.
Hereafter , only first power-on , start by NTSC unrelated version (Send command to module).
Mode is clear at AC OFF→ON again.

Insert a power cord in an outlet while pressing the [STOP] and [DISC 3 EJECT] buttons on the main unit simultaneously.
↓
This mode is completed.

7. Fan ON/OFF setting
Toggle between FAN switch ON and OFF.
(FAN-CTL : L → H TOGGLE)
This test mode is only effective during STANDBY MODE.
Test mode exit when system STANDBY → P.ON

Press the [STOP] and [DISC 2 EJECT] buttons on the main unit simultaneously at standby.
↓
This mode is completed.

8. Volume large step change
VOLUME CHANGE
VOLUME STEP MAX(31)
→ VOLUME STEP CENTER(15) TOGGLE
Normal Operation TEST mode.
System returns to normal operation after performing VOLUME CHANGE.

Press the [STANDBY], [ENTER] and [3] keys on the remote controller simultaneously in power on state.
↓
FL indication " VOLUME MAX "
↓
Press the [STANDBY], [ENTER] and [3] buttons again on the remote controller simultaneously.
↓
FL indication " VOLUME 15 "
↓
Press the [STANDBY], [ENTER] and [3] keys again on the remote controller simultaneously.

9. Micon version display

TEMPORARY DISPLAY FOR MICON VERSION (5SEC)
After 5 seconds, return to previous display.
Each key press will toggle temporary display for the following:
SYSCON VERSION → DVD LSI (BE) VERSION)
→ DVD MECHA VERSION

∗ DVD LSI (BE & FE) VERSION CAN ONLY BEEN DISPLAY DURING
SYSTEM POWER ON IN DVD MODE
(WHEN DVD LSI P.ON)

∗ IF THERE IS NO INFORMATION FEEDBACK, SYS-CON WILL DISPLAY
"WAIT" BLINKING 0.5SEC ON & OFF

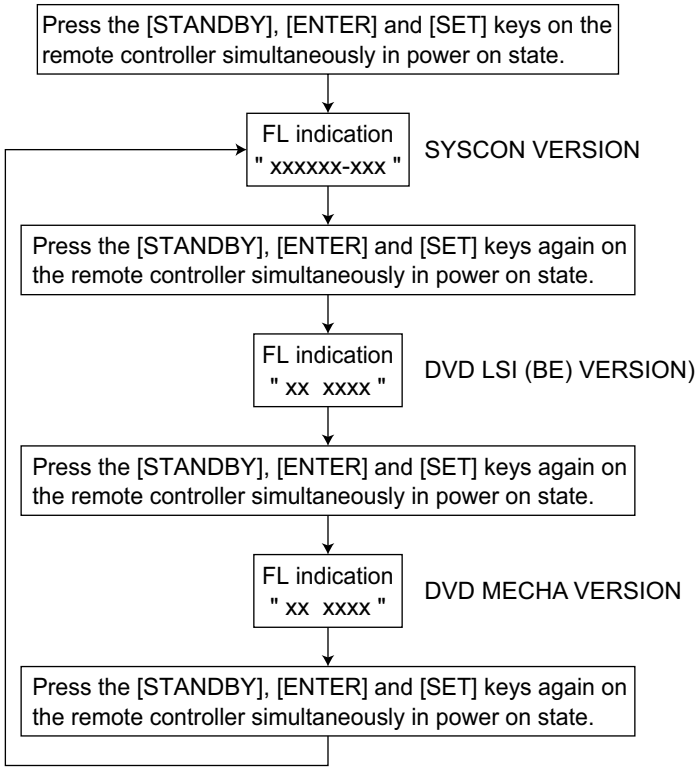

10. LCD all segment blinking

LCD ALL SEGMENT BLINKING (0.5sec:ON/0.5sec:OFF)
Each key press will toggle this TEST mode ON/OFF.

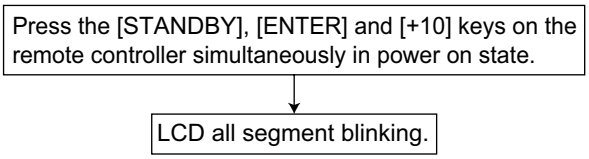

11. Tuner version

Each Key pressed will display the current Sys-con Tuner Version for 5 seconds and then changed back to previous display.

U1 - 9KHz	Display: " 0V USNE 9K "
U1 - 10KHz	Display: " 0V USNE10K "
U2 - 9KHz	Display: " 1V UW 9K "
U2 - 10KHz	Display: " 1V UW 10K "
U3 - 9KHz	Display: " 2V UX 9K "
U3 - 10KHz	Display: " 2V UX 10K "
U4 - 9KHz	Display: " 3V A 9K "
U5 - 9KHz	Display: " 4V UY 9K "
U5 - 10KHz	Display: " 4V UY 10K "

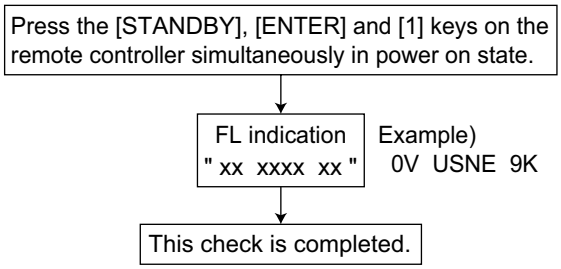

12. DVD test mode

Enters DVD-TEST mode.
DVD-TEST mode specification based on DVD-MODULE specification. To exit DVD-TEST mode, AC OFF the system, then AC ON again.
For Region Rewrite and DVD-AUDIO Device Key Writing, refer to Region Rewrite and Device Key Writing section below for exit procedure.

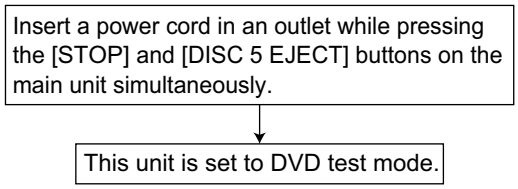

∗ The details refer to "4.3.3 DVD test mode".

13. DVD initialize

DVD module initialized.
Display will return to DVD Test Mode Area display (" T xxy vw "). Press Power key to exit this TEST mode.

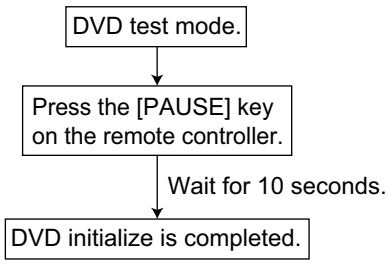

14. DVD region confirm mode

Into the DVD region confirm mode.

∗ DVD REGION CHECK CAN ONLY BEEN DISPLAY DURING
SYSTEM POWER ON IN DVD MODE
(WHEN DVD LSI P.ON)
Temporary display region code on LCD for 5 seconds.

∗ IF THERE IS NO INFORMATION FEEDBACK, SYS-CON WILL DISPLAY
"WAIT" BLINKING 0.5SEC ON & OFF

∗ LCD WILL DISPLAY "AREAxxRy" WHERE "AREAxx" is the DESTINATION INFO & R is the REGION INFO.

After 5 seconds, return to previous display.

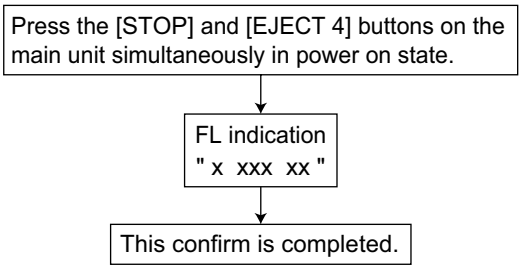

4.3.3 DVD test mode

1. To enter DVD TEST mode,
   (1) AC POWER ON while holding STOP+DVD5 EJECT/CLOSE keys.
   (2) DVD Mecha will start in TEST MODE, LCD will display:

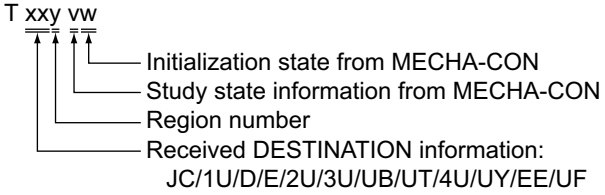

2. To exit DVD TEST mode,
   - During TEST MODE (except for Device Key write & DVD Region Re-write), press POWER KEY and wait until "POFF OK" is displayed for 5sec, then system goes into Standby Mode & Backlight LED is off.
     This means that System now successfully exit the DVD Test Mode & back to normal mode.
   - To exit TEST mode for Device Key Write & DVD Region Re-write, first AC OFF, then AC ON again to return to normal state.

3. EEPROM INITIALIZATION

   3.1 NORMAL INITIALIZE
   (1) During DVD TEST MODE, press PAUSE key on the main unit to start NORMAL EEPROM INITIALIZATION.
   (2) LCD will display:

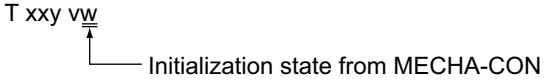

   3.2 FULL INITIALIZE
   (1) During DVD TEST MODE, press >>| key on set 2 seconds control to start FULL EEPROM INITIALIZATION.
   (2) LCD will display:

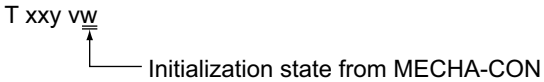

4. DVD check mode

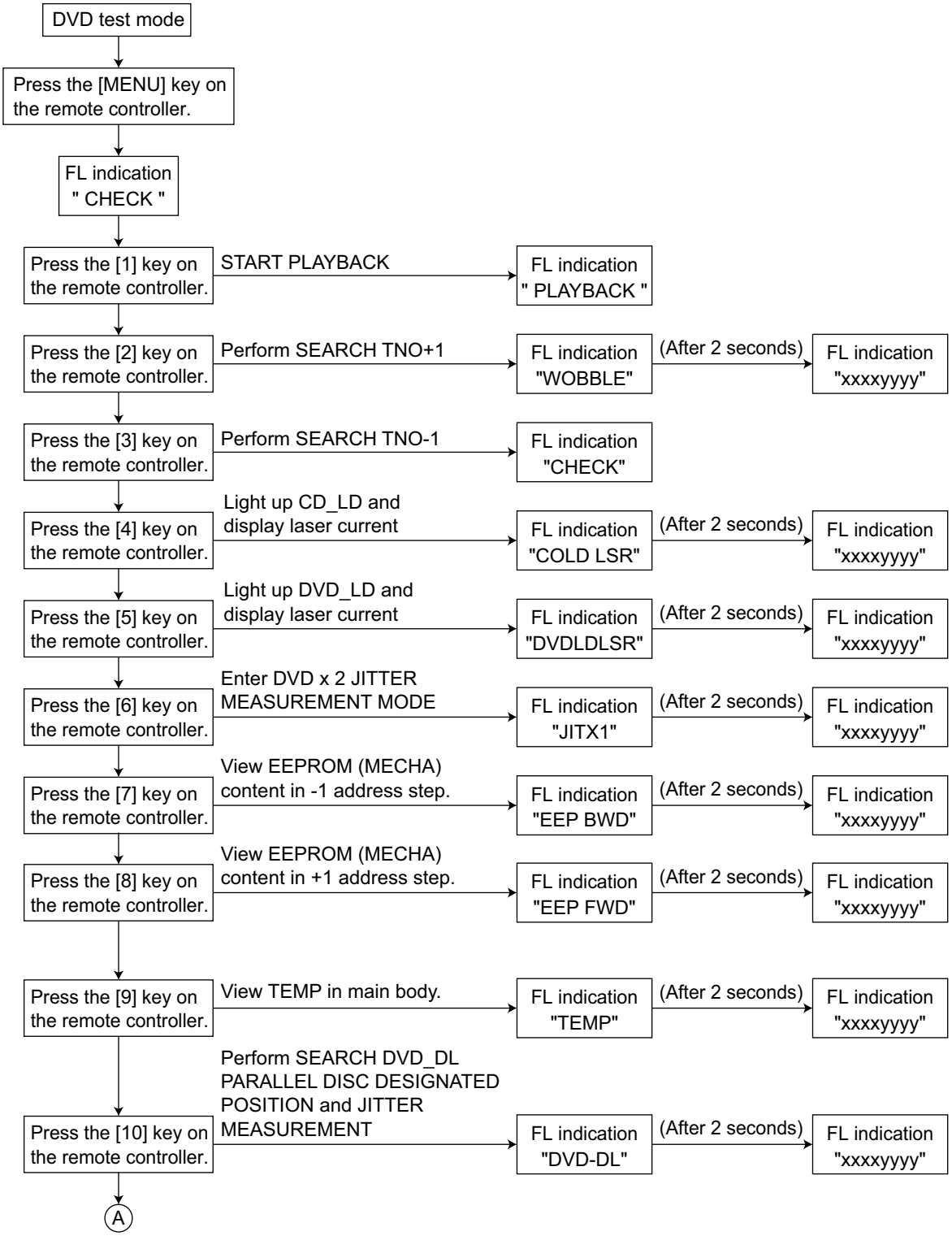

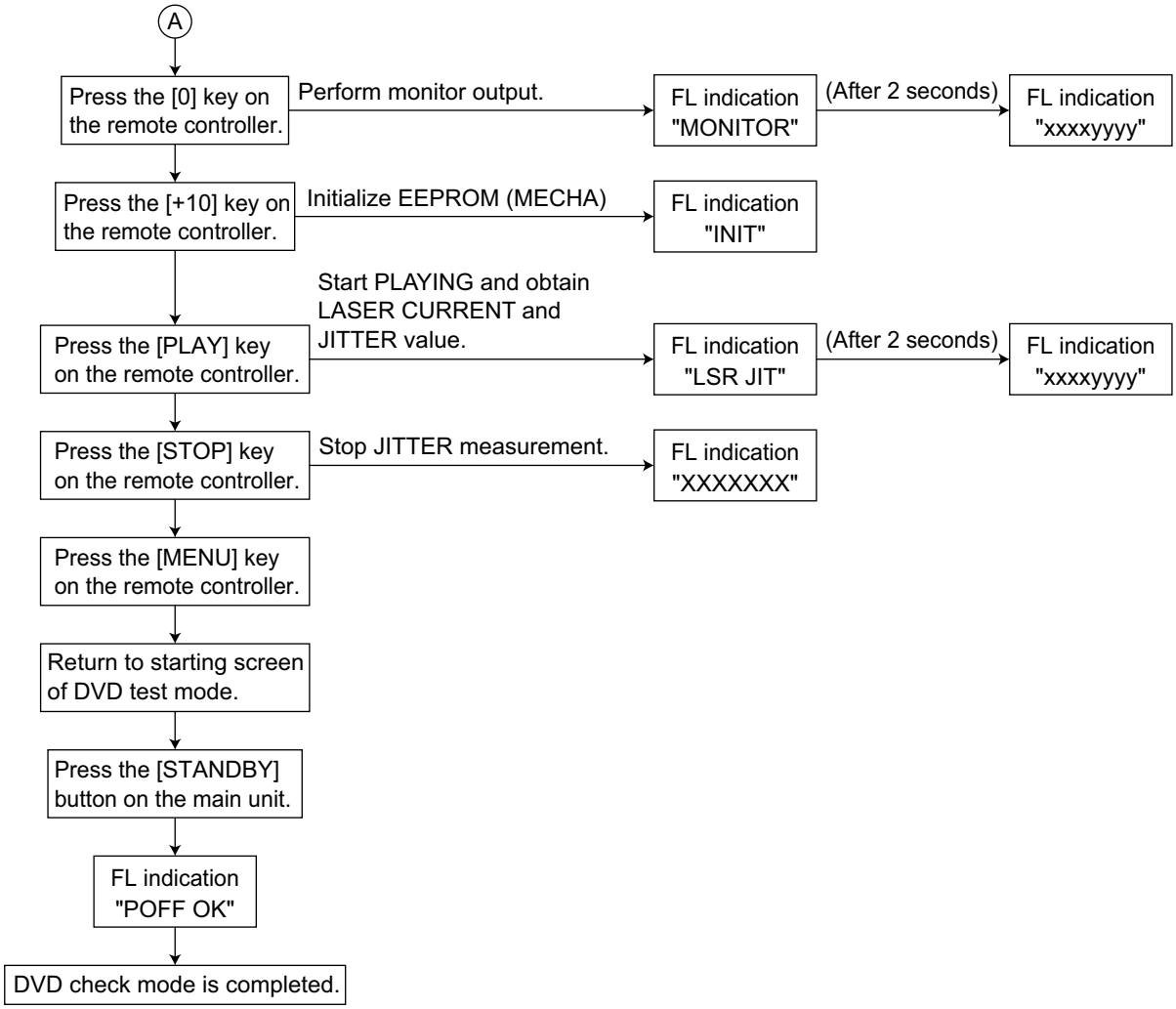
A
Press the [0] key on the remote controller.
Perform monitor output.
FL indication "MONITOR"
(After 2 seconds)
FL indication "xxxxyyyy"
Press the [+10] key on the remote controller.
Initialize EEPROM (MECHA)
FL indication "INIT"
Start PLAYING and obtain LASER CURRENT and JITTER value.
Press the [PLAY] key on the remote controller.
FL indication "LSR JIT"
(After 2 seconds)
FL indication "xxxxyyyy"
Press the [STOP] key on the remote controller.
Stop JITTER measurement.
FL indication "XXXXXXX"
Press the [MENU] key on the remote controller.
Return to starting screen of DVD test mode.
Press the [STANDBY] button on the main unit.
FL indication "POFF OK"
DVD check mode is completed.

SECTION 5
TROUBLESHOOTING

This service manual does not describe TROUBLESHOOTING.

Victor Company of Japan, Limited
AV & MULTIMEDIA COMPANY AUDIO/VIDEO SYSTEMS CATEGORY 10-1,1chome,Ohwatari-machi,Maebashi-city,371-8543,Japan

(No.MB368)

Printed in Japan
VPT

PARTS LIST

[DX-T9] [DX-T7]
[DX-T5]

* All printed circuit boards and its assemblies are not available as service parts.

DX-T9,DX-T7	
Area suffix	
A	Australia
US	Singapore
UW	Brazil,Mexico,Peru
UX	Saudi Arabia
UG	Turkey,South Africa,Egypt
UN	Asean

DX-T5	
Area suffix	
US	Singapore
UW	Brazil,Mexico,Peru
UX	Saudi Arabia
UY	Argentina
UG	Turkey,South Africa,Egypt
UN	Asean

- Contents -

Exploded view of general assembly and parts list (Block No.M1) (DX-T9) ---------- 3- 2
Exploded view of general assembly and parts list (Block No.M2) (DX-T7) ---------- 3- 6
Exploded view of general assembly and parts list (Block No.M3) (DX-T5) ---------- 3-10
DVD mechanism assembly and parts list (Block No.MJ) (Common) ---------- 3-14
DVD changer mechanism assembly and parts list (Block No.MK)
(FMU-SM1-1M) (DX-T9,DX-T7) ---------- 3-16
DVD changer mechanism assembly and parts list (Block No.MS)
(FMU-SM1-11M) (DX-T5) ---------- 3-18
Cassette mechanism assembly and parts list (Block No.MP) (SLC-S401M)
- Cassette A (Common) ---------- 3-20
Cassette mechanism assembly and parts list (Block No.MQ) (SLC-S302M)
- Cassette B (Common) ---------- 3-22
Electrical parts list (Block No.01~17) ---------- 3-24
Packing materials and accessories parts list (Block No.M4) (DX-T9) ---------- 3-52
Packing materials and accessories parts list (Block No.M5) (DX-T7) ---------- 3-54
Packing materials and accessories parts list (Block No.M6) (DX-T5) ---------- 3-56

Exploded view of general assembly and parts list

(DX-T9)

Block No. M 1 M M

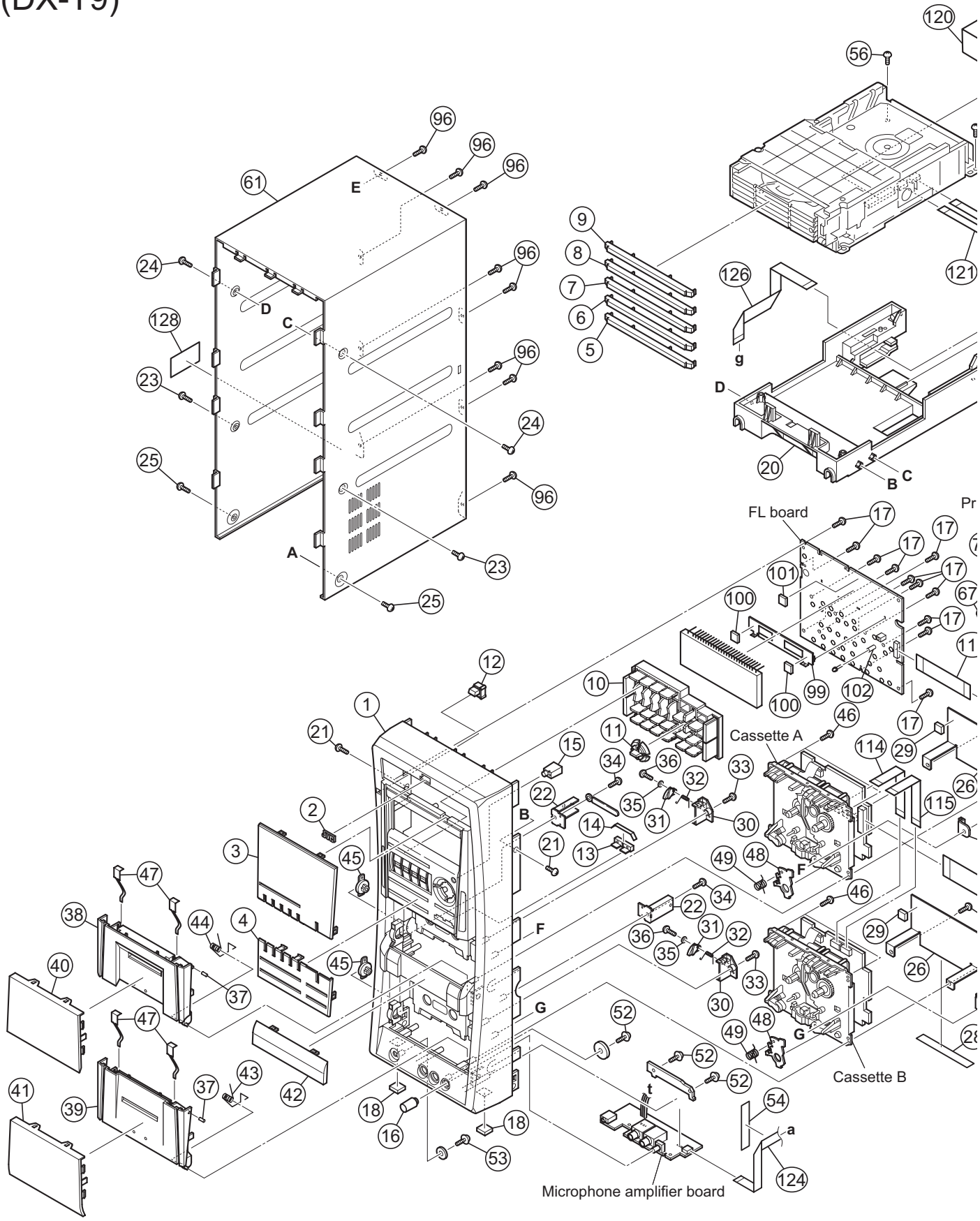

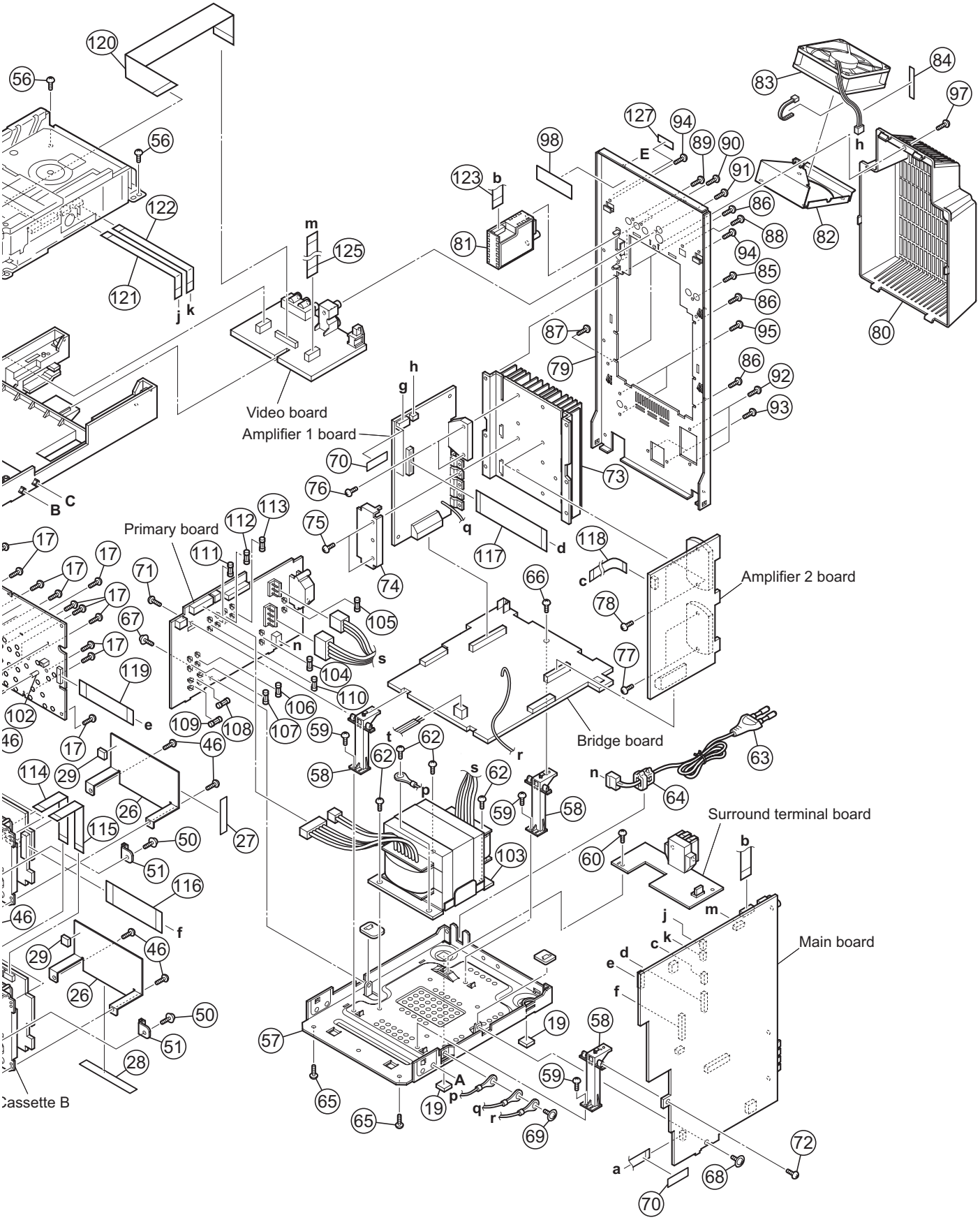
Video board
Amplifier 1 board
Primary board
Amplifier 2 board
Bridge board
Surround terminal board
Main board
Cassette B

General Assembly (DX-T9)

Block No. [M][1][M][M]

⚠	Symbol No.	Part No.	Part Name	Description	Local
	1	GV10276-004A	FRONT PANEL ASY		
	2	GV40077-002A	JVC BADGE		
	3	GV30697-006A	FL LENS		
	4	GV30698-004A	BUTTON LENS		
	5	GV30699-002A	TRAY FITTING 1		
	6	GV30700-002A	TRAY FITTING 2		
	7	GV30701-002A	TRAY FITTING 3		
	8	GV30702-002A	TRAY FITTING 4		
	9	GV30703-002A	TRAY FITTING 5		
	10	GV10273-001A	CENTER BUTTON		
	11	GV40586-003A	V.ILLUM NATION		
	12	GV40587-001A	POWER INDICATOR		
	13	GV40588-001A	RHYTM.INDICATOR		
	14	GV40628-001A	SPACER		
	15	GV40600-002A	REMOTE LENS		
	16	GV40608-001A	MIC.VOL KNOB		
	17	QYSDSF2608ZA	TAP SCREW	M2.6 x 8mm(x11)	
	18	GV40313-001A	FELT SPACER	(x2)	
	19	GV40313-002A	FELT SPACER	(x2)	
	20	GV10260-001A	MECHA CHASSIS		
	21	QYSSSF3010ZA	TAP SCREW	M3 x 10mm(x2)	
	22	GV40584-001A	METAL COVER BKT	(x2)	
	23	QYSDSG3008NA	TAP SCREW	M3 x 8mm(x2)	
	24	QYSDSG3008NA	TAP SCREW	M3 x 8mm(x2)	
	25	QYSDSG3008NA	TAP SCREW	M3 x 8mm(x2)	
	26	GV30124-001A	TRANS SH ELD	(x2)	
	27	GV30349-046A	SPACER		
	28	GV30349-047A	SPACER		
	29	GV30349-049A	SPACER	(x2)	
	30	GV40589-001A	SW NG CAM BKT	(x2)	
	31	GV40501-002A	SW NG CAM	(x2)	
	32	GV40502-002A	SPRING	(x2)	
	33	QYSBSF3010ZA	TAP SCREW	M3 x 10mm(x2)	
	34	QYSBSF3010ZA	TAP SCREW	M3 x 10mm(x2)	
	35	GV40503-001A	WASHER	(x2)	
	36	GV40504-002A	SCREW	(x2)	
	37	GV40515-001A	METAL PIN	(x2)	
	38	GV10262-001A	CASS HOLDER(A)		
	39	GV10261-001A	CASS HOLDER(B)		
	40	GV20344-001A	CASS LENS (A)		
	41	GV20343-001A	CASS LENS (B)		
	42	GV30705-001A	LENS ORNAMENT		
	43	GV40596-001A	DOOR SPRING(B)		
	44	GV40619-001A	DOOR SPRING(A)		
	45	GV40034-001A	DAMPER ASSY.	(x2)	
	46	QYSBSF3010ZA	TAP SCREW	M3 x 10mm(x8)	
	47	VKY4180-401	CASSETTE SPRING	(x4)	
	48	VKL7850-002	EJECT SAFTY(R)	(x2)	
	49	VKW5258-003	TORSION SPRING	(x2)	
	50	E65923-009	TAPP NG SCREW	(x2)	
	51	GV40618-001A	SLC BRACKET	(x2)	
	52	QYSBSFG3008ZA	TAP SCREW	M3 x 8mm(x3)	
	53	GV40035-002A	SCREW		
	54	GV30349-050A	SPACER		
	56	QYSBSF3010ZA	TAP SCREW	M3 x 10mm(x2)	
	57	GV10253-004A	BOTTOM CHASSIS		
	58	GV30706-001A	SUPPORT BKT.	(x3)	
	59	QYSBSG3006ZA	TAP SCREW	M3 x 6mm(x3)	
	60	QYSBSG3006ZA	TAP SCREW	M3 x 6mm	
	61	GV10254-003A/S/	METAL COVER		
	62	QYSDSTL4008EA	TAP SCREW	M4 x 8mm(x4)	
⚠	63	QMPG150-244-JC	POWER CORD(AST)	2.44m BLACK	A
⚠	63	QMPK210-205-JN	POWER CORD(EU)	2.05m BLACK	UG,UN,US,UW
⚠	63	QMPN240-200-JD	POWER CORD(EU)	2m BLACK	UX
⚠	64	QZW0033-001	STRAIN RELIEF		
	65	QYSSST3008ZA	TAP SCREW	M3 x 8mm(x2)	
	66	QYSBSF3008ZA	TAP SCREW	M3 x 8mm	
	67	QYSBSGG3008EA	TAP SCREW	M3 x 8mm	
	68	QYSBSGG3008EA	TAP SCREW	M3 x 8mm	
	69	QYSBSGG3008EA	TAP SCREW	M3 x 8mm	
	70	GV30349-025A	SPACER	(x3)	
	71	QYSBSF3008ZA	TAP SCREW	M3 x 8mm	
	72	QYSBSF3008ZA	TAP SCREW	M3 x 8mm	
	73	GV30694-004A	HEAT SINK		

⚠	Symbol No.	Part No.	Part Name	Description	Local
	74	GV40488-001A	LEAF SPRING		
	75	QYSBSG3016EA	TAP SCREW	M3 x 16mm(x2)	
	76	QYSBSG3016EA	TAP SCREW	M3 x 16mm(x2)	
	77	QYSBSG3016EA	TAP SCREW	M3 x 16mm(x2)	
	78	QYSBSG3016EA	TAP SCREW	M3 x 16mm(x2)	
	79	GV10255-022A	REAR PANEL		A
	79	GV10255-020A	REAR PANEL		UN,US
	79	GV10255-019A	REAR PANEL		UW
	79	GV10255-021A	REAR PANEL		UG,UX
	80	GV10263-002A	REAR COVER		
	81	QAU0307-003	TUNER		
	82	GV30686-001A	FAN BKT.		
	83	QAR0317-001	FAN		
	84	GV30349-026A	SPACER		
	85	QYSBSGY3008EA	TAP SCREW	AUX	
	86	QYSBSGY3008EA	TAP SCREW	HEAT SINK(x4)	
	87	QYSBSGY3008EA	TAP SCREW	EARTH PLATE	
	88	QYSBSGY3008EA	TAP SCREW	OPTICAL JACK	
	89	QYSBSGY3008EA	TAP SCREW	COMP. JACK(x2)	
	90	QYSBSGY3008EA	TAP SCREW	TUNNER PACK(x2)	
	91	QYSBSGY3008EA	TAP SCREW	VIDEO JACK	
	92	QYSBSGY3008EA	TAP SCREW	SPK. JACK(x2)	
	93	QYSBSGY3008EA	TAP SCREW	SPK. JACK(x2)	
	94	QYSBSGY3008EA	TAP SCREW	MECHA CHASSIS(x2)	
	95	QYSBSF3012EA	TAP SCREW	VOL. SELECTOR(x2)	
	96	QYSBSGY3008EA	TAP SCREW	METAL COVER(x8)	
	97	QYSBSGY3008EA	TAP SCREW	REAR COVER	
	98	LV41843-002A	LASER CAUTION		
	99	GV30687-002A	FL HOLDER		
	100	GV30349-021A	SPACER	(x2)	
	101	GV30349-049A	SPACER		
	102	GV40531-001A	LED HOLDER		
⚠	103	QQT0477-001	POWER TRANSF	T 1001	
⚠	104	QMFZ051-8R0-J8	FUSE	F 1001 8A	
⚠	105	QMF51W2-6R3-J8	FUSE	F 1002 6.3A AC250V	
⚠	106	QMF51W2-6R3-J8	FUSE	F 1003 6.3A AC250V	
⚠	107	QMF51W2-6R3-J8	FUSE	F 1004 6.3A AC250V	
⚠	108	QMF51W2-1R25-J8	FUSE	F 1005 1 25A AC250V	
⚠	109	QMF51W2-3R15-J8	FUSE	F 1006 3.15A AC250V	
⚠	110	QMF51W2-5R0-J8	FUSE	F 1007 5A AC250V	
⚠	111	QMF51W2-5R0-J8	FUSE	F 1008 5A AC250V	
⚠	112	QMF51W2-5R0-J8	FUSE	F 1009 5A AC250V	
⚠	113	QMF51W2-5R0-J8	FUSE	F 1010 5A AC250V	
	114	QUQH12-0910BJ-E	FFC WIRE	9pin 10cm	
	115	QUQH12-1010BJ-E	FFC WIRE	10pin 10cm	
	116	QUQH12-2512AJ-E	FFC WIRE	25pin 12cm	
	117	QUQH12-1916AJ-E	FFC WIRE	19pin 16cm	
	118	QUQH12-0808AJ-E	FFC WIRE	8pin 8cm	
	119	QUQH10-1910AJ-E	FFC WIRE	19pin 10cm	
	120	QUQH10-2823AJ-E	FFC WIRE	28pin 23cm	
	121	QUQH10-1016AJ-E	FFC WIRE	10pin 16cm	
	122	QUQH10-0814AJ-E	FFC WIRE	8pin 14cm	
	123	QUQH12-1118AJ-E	FFC WIRE	11pin 18cm	
	124	QUQH12-0516BJ-E	FFC WIRE	5pin 16cm	
	125	QUQH12-0813AJ-E	FFC WIRE	8pin 13cm	
	126	QUQH12-1118AJ-E	FFC WIRE	11pin 18cm	
	127	GV40641-001A	NOM LABEL		UW
	128	GV40642-001A	CAUTION LABEL		UW

Exploded view of general assembly and parts list

(DX-T7)

Block No. M 2 M M

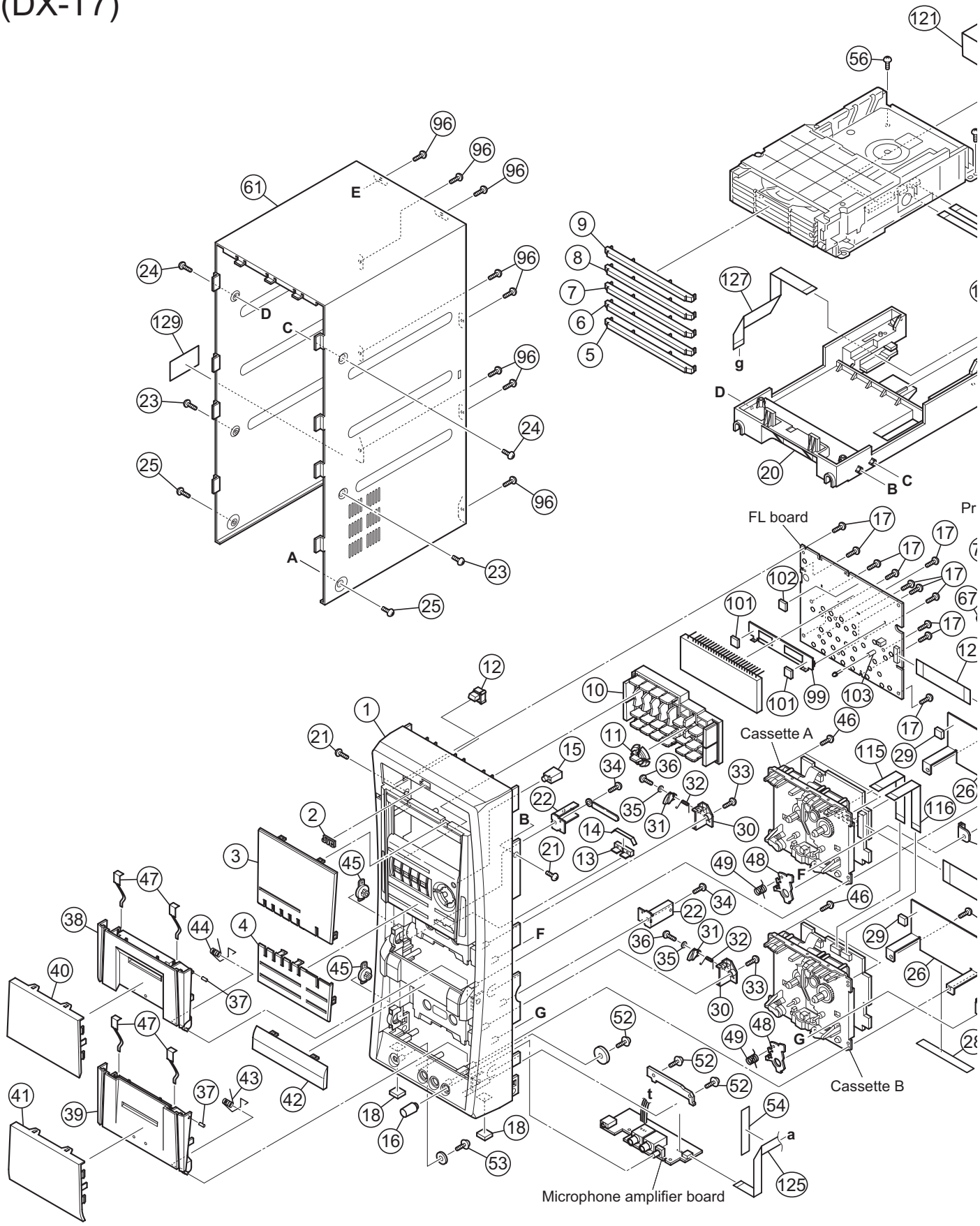

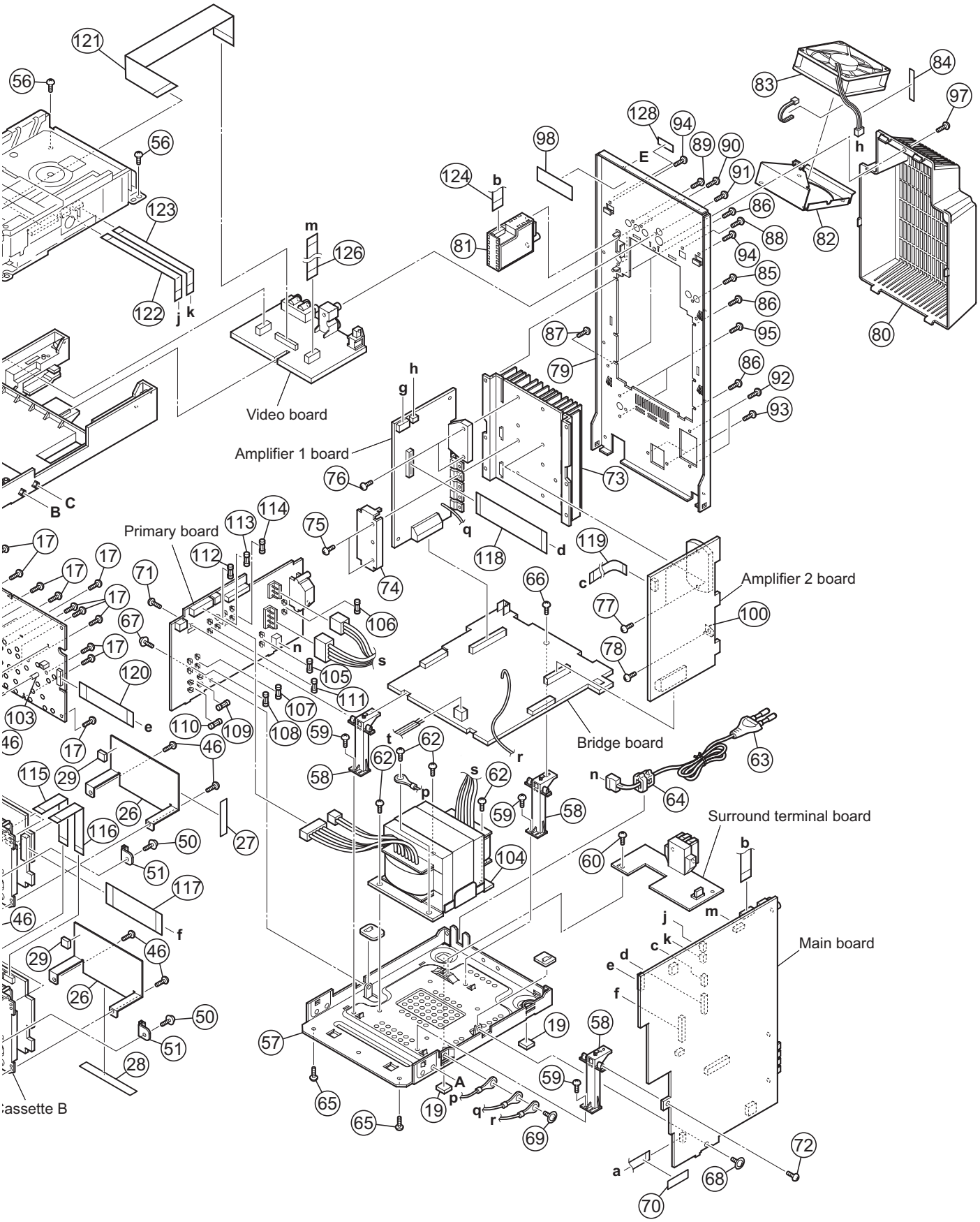
Video board
Amplifier 1 board
Primary board
Amplifier 2 board
Bridge board
Surround terminal board
Main board
Cassette B

General Assembly (DX-T7)

Block No. [M][2][M][M]

⚠	Symbol No.	Part No.	Part Name	Description	Local
	1	GV10276-004A	FRONT PANEL ASY		
	2	GV40077-002A	JVC BADGE		
	3	GV30697-005A	FL LENS		
	4	GV30698-004A	BUTTON LENS		
	5	GV30699-001A	TRAY FITTING 1		
	6	GV30700-001A	TRAY FITTING 2		
	7	GV30701-001A	TRAY FITTING 3		
	8	GV30702-001A	TRAY FITTING 4		
	9	GV30703-001A	TRAY FITTING 5		
	10	GV10273-001A	CENTER BUTTON		
	11	GV40586-003A	V.ILLUM NATION		
	12	GV40587-001A	POWER INDICATOR		
	13	GV40588-001A	RHYTM.INDICATOR		
	14	GV40628-001A	SPACER		
	15	GV40600-002A	REMOTE LENS		
	16	GV40608-001A	MIC.VOL KNOB		
	17	QYSDSF2608ZA	TAP SCREW	M2.6 x 8mm(x11)	
	18	GV40313-001A	FELT SPACER	(x2)	
	19	GV40313-002A	FELT SPACER	(x2)	
	20	GV10260-001A	MECHA CHASSIS		
	21	QYSSSF3010ZA	TAP SCREW	M3 x 10mm(x2)	
	22	GV40584-001A	METAL COVER BKT	(x2)	
	23	QYSDSG3008NA	TAP SCREW	M3 x 8mm(x2)	
	24	QYSDSG3008NA	TAP SCREW	M3 x 8mm(x2)	
	25	QYSDSG3008NA	TAP SCREW	M3 x 8mm(x2)	
	26	GV30124-001A	TRANS SH ELD	(x2)	
	27	GV30349-046A	SPACER		
	28	GV30349-047A	SPACER		
	29	GV30349-049A	SPACER	(x2)	
	30	GV40589-001A	SW NG CAM BKT	(x2)	
	31	GV40501-002A	SW NG CAM	(x2)	
	32	GV40502-002A	SPRING	(x2)	
	33	QYSBSF3010ZA	TAP SCREW	M3 x 10mm(x2)	
	34	QYSBSF3010ZA	TAP SCREW	M3 x 10mm(x2)	
	35	GV40503-001A	WASHER	(x2)	
	36	GV40504-002A	SCREW	(x2)	
	37	GV40515-001A	METAL PIN	(x2)	
	38	GV10262-001A	CASS HOLDER(A)		
	39	GV10261-001A	CASS HOLDER(B)		
	40	GV20344-001A	CASS LENS (A)		
	41	GV20343-001A	CASS LENS (B)		
	42	GV30705-001A	LENS ORNAMENT		
	43	GV40596-001A	DOOR SPRING(B)		
	44	GV40619-001A	DOOR SPRING(A)		
	45	GV40034-001A	DAMPER ASSY.	(x2)	
	46	QYSBSF3010ZA	TAP SCREW	M3 x 10mm(x8)	
	47	VKY4180-401	CASSETTE SPRING	(x4)	
	48	VKL7850-002	EJECT SAFTY(R)	(x2)	
	49	VKW5258-003	TORSION SPRING	(x2)	
	50	E65923-009	TAPP NG SCREW	(x2)	
	51	GV40618-001A	SLC BRACKET	(x2)	
	52	QYSBSFG3008ZA	TAP SCREW	M3 x 8mm(x3)	
	53	GV40035-002A	SCREW		
	54	GV30349-050A	SPACER		
	56	QYSBSF3010ZA	TAP SCREW	M3 x 10mm(x2)	
	57	GV10253-004A	BOTTOM CHASSIS		
	58	GV30706-001A	SUPPORT BKT.	(x3)	
	59	QYSBSG3006ZA	TAP SCREW	M3 x 6mm(x3)	
	60	QYSBSG3006ZA	TAP SCREW	M3 x 6mm	
	61	GV10254-003A/S/	METAL COVER		
	62	QYSDSTL4008EA	TAP SCREW	M4 x 8mm(x4)	
⚠	63	QMPG150-244-JC	POWER CORD(AST)	2.44m BLACK	A
⚠	63	QMPK210-205-JN	POWER CORD(EU)	2.05m BLACK	UG,UN,US,UW,UX
⚠	64	QZW0033-001	STRAIN RELIEF		
	65	QYSSST3008ZA	TAP SCREW	M3 x 8mm(x2)	
	66	QYSBSF3008ZA	TAP SCREW	M3 x 8mm	
	67	QYSBSGG3008EA	TAP SCREW	M3 x 8mm	
	68	QYSBSGG3008EA	TAP SCREW	M3 x 8mm	
	69	QYSBSGG3008EA	TAP SCREW	M3 x 8mm	
	70	GV30349-025A	SPACER		
	71	QYSBSF3008ZA	TAP SCREW	M3 x 8mm	
	72	QYSBSF3008ZA	TAP SCREW	M3 x 8mm	
	73	GV30694-002A	HEAT SINK		
	74	GV40488-001A	LEAF SPRING		

⚠	Symbol No.	Part No.	Part Name	Description	Local
	75	QYSBSG3016EA	TAP SCREW	M3 x 16mm(x2)	
	76	QYSBSG3016EA	TAP SCREW	M3 x 16mm(x2)	
	77	QYSBSG3016EA	TAP SCREW	M3 x 16mm(x2)	
	78	QYSBSG3016EA	TAP SCREW	M3 x 16mm	
	79	GV10255-023A	REAR PANEL		A
	79	GV10255-017A	REAR PANEL		UN,US
	79	GV10255-024A	REAR PANEL		UW
	79	GV10255-018A	REAR PANEL		UG,UX
	80	GV10263-002A	REAR COVER		
	81	QAU0307-003	TUNER		
	82	GV30686-001A	FAN BKT.		
	83	QAR0317-001	FAN		
	84	GV30349-026A	SPACER		
	85	QYSBSGY3008EA	TAP SCREW	AUX	
	86	QYSBSGY3008EA	TAP SCREW	HEAT SINK(x4)	
	87	QYSBSGY3008EA	TAP SCREW	EARTH PLATE	
	88	QYSBSGY3008EA	TAP SCREW	OPTICAL JACK	
	89	QYSBSGY3008EA	TAP SCREW	COMP. JACK(x2)	
	90	QYSBSGY3008EA	TAP SCREW	TUNNER PACK(x2)	
	91	QYSBSGY3008EA	TAP SCREW	VIDEO JACK	
	92	QYSBSGY3008EA	TAP SCREW	SPK. JACK(x2)	
	93	QYSBSGY3008EA	TAP SCREW	SPK. JACK(x2)	
	94	QYSBSGY3008EA	TAP SCREW	MECHA CHASSIS(x2)	
	95	QYSBSF3012EA	TAP SCREW	VOL. SELECTOR(x2)	
	96	QYSBSGY3008EA	TAP SCREW	METAL COVER(x8)	
	97	QYSBSGY3008EA	TAP SCREW	REAR COVER	
	98	LV41843-002A	LASER CAUTION		
	99	GV30687-002A	FL HOLDER		
	101	GV30349-021A	SPACER	(x2)	
	102	GV30349-049A	SPACER		
	103	GV40531-001A	LED HOLDER		
⚠	104	QQT0476-001	POWER TRANSF	T 1001	
⚠	105	QMF51W2-6R3-J8	FUSE	F 1001 6.3A AC250V	
⚠	106	QMF51W2-5R0-J8	FUSE	F 1002 5A AC250V	
⚠	107	QMF51W2-6R3-J8	FUSE	F 1003 6.3A AC250V	
⚠	108	QMF51W2-6R3-J8	FUSE	F 1004 6.3A AC250V	
⚠	109	QMF51W2-1R25-J8	FUSE	F 1005 1 25A AC250V	
⚠	110	QMF51W2-3R15-J8	FUSE	F 1006 3.15A AC250V	
⚠	111	QMF51W2-4R0-J8	FUSE	F 1007 4A AC250V	
⚠	112	QMF51W2-4R0-J8	FUSE	F 1008 4A AC250V	
⚠	113	QMF51W2-4R0-J8	FUSE	F 1009 4A AC250V	
⚠	114	QMF51W2-4R0-J8	FUSE	F 1010 4A AC250V	
	115	QUQH12-0910BJ-E	FFC WIRE	9pin 10cm	
	116	QUQH12-1010BJ-E	FFC WIRE	10pin 10cm	
	117	QUQH12-2512AJ-E	FFC WIRE	25pin 12cm	
	118	QUQH12-1916AJ-E	FFC WIRE	19pin 16cm	
	119	QUQH12-0808AJ-E	FFC WIRE	8pin 8cm	
	120	QUQH10-1910AJ-E	FFC WIRE	19pin 10cm	
	121	QUQH10-2823AJ-E	FFC WIRE	28pin 23cm	
	122	QUQH10-1016AJ-E	FFC WIRE	10pin 16cm	
	123	QUQH10-0814AJ-E	FFC WIRE	8pin 14cm	
	124	QUQH12-1118AJ-E	FFC WIRE	11pin 18cm	
	125	QUQH12-0516BJ-E	FFC WIRE	5pin 16cm	
	126	QUQH12-0813AJ-E	FFC WIRE	8pin 13cm	
	127	QUQH12-1118AJ-E	FFC WIRE	11pin 18cm	
	128	GV40641-001A	NOM LABEL		UW
	129	GV40642-001A	CAUTION LABEL		UW

Exploded view of general assembly and parts list

(DX-T5)

Block No. M 3 M M

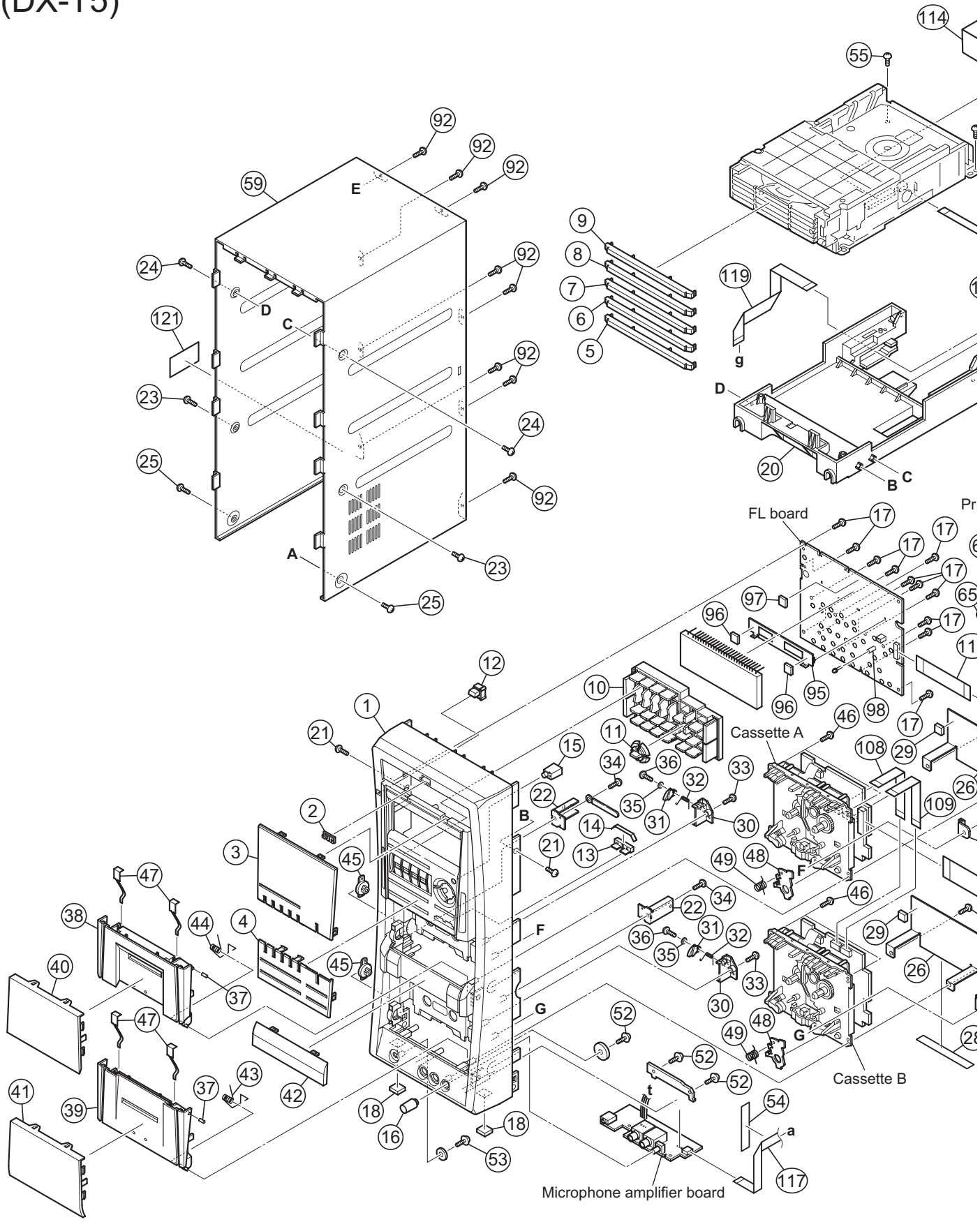

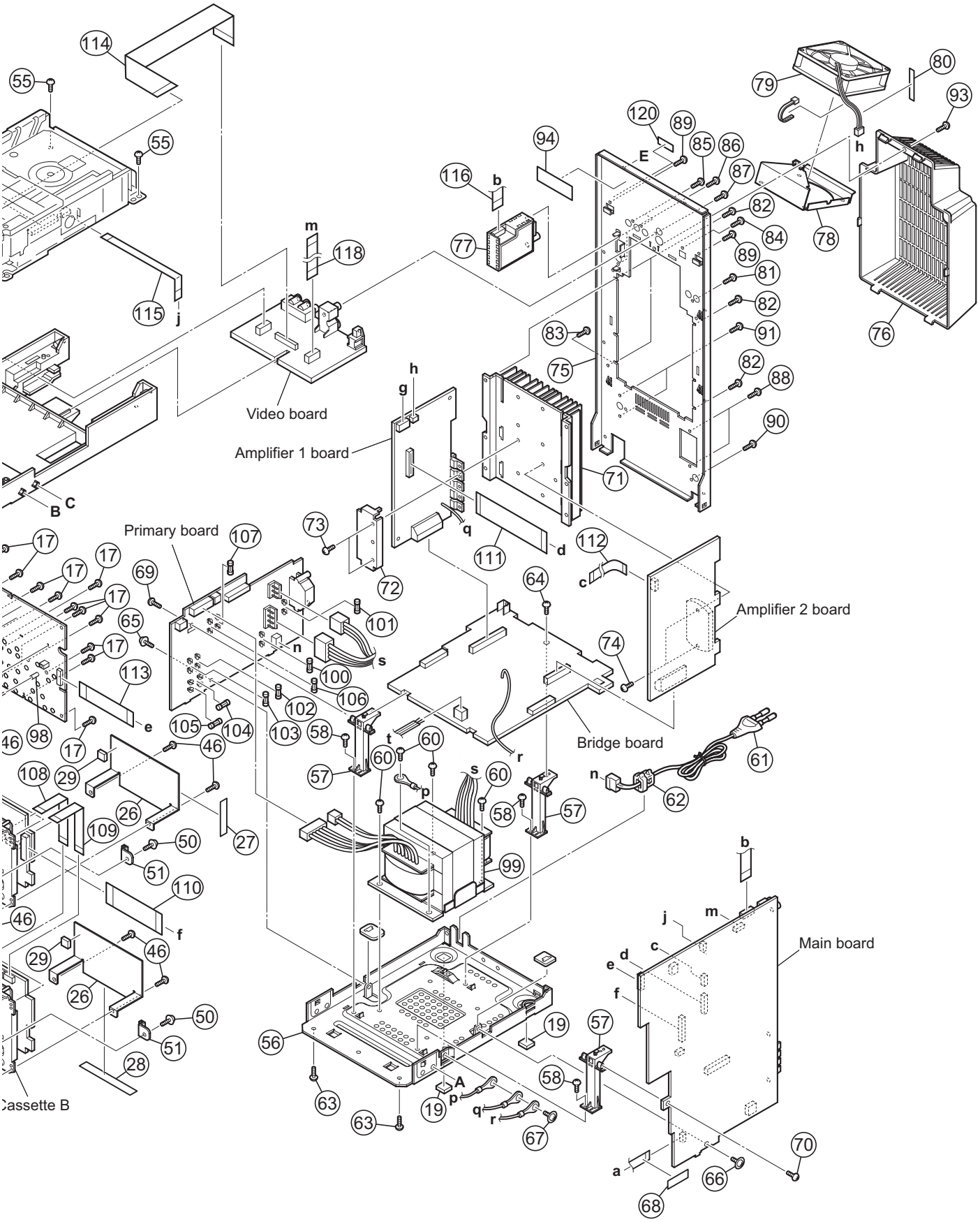
Video board
Amplifier 1 board
Primary board
Amplifier 2 board
Bridge board
Main board
Cassette B

General Assembly (DX-T5)

Block No. [M][3][M][M]

⚠	Symbol No.	Part No.	Part Name	Description	Local
	1	GV10276-003A	FRONT PANEL ASY		
	2	GV40077-002A	JVC BADGE		
	3	GV30697-004A	FL LENS		
	4	GV30698-003A	BUTTON LENS		
	5	GV30699-001A	TRAY FITTING 1		
	6	GV30700-001A	TRAY FITTING 2		
	7	GV30701-001A	TRAY FITTING 3		
	8	GV30702-001A	TRAY FITTING 4		
	9	GV30703-001A	TRAY FITTING 5		
	10	GV10273-002A	CENTER BUTTON		
	11	GV40586-004A	V.ILLUM NATION		
	12	GV40587-001A	POWER INDICATOR		
	13	GV40588-001A	RHYTM.INDICATOR		
	14	GV40628-001A	SPACER		
	15	GV40600-002A	REMOTE LENS		
	16	GV40608-001A	MIC.VOL KNOB		
	17	QYSDSF2608ZA	TAP SCREW	M2.6 x 8mm(x11)	
	18	GV40313-001A	FELT SPACER	(x2)	
	19	GV40313-002A	FELT SPACER	(x2)	
	20	GV10260-001A	MECHA CHASSIS		
	21	QYSSSF3010ZA	TAP SCREW	M3 x 10mm(x2)	
	22	GV40584-001A	METAL COVER BKT	(x2)	
	23	QYSDSG3008NA	TAP SCREW	M3 x 8mm(x2)	
	24	QYSDSG3008NA	TAP SCREW	M3 x 8mm(x2)	
	25	QYSDSG3008NA	TAP SCREW	M3 x 8mm(x2)	
	26	GV30124-001A	TRANS SH ELD	(x2)	
	27	GV30349-046A	SPACER		
	28	GV30349-047A	SPACER		
	29	GV30349-049A	SPACER	(x2)	
	30	GV40589-001A	SW NG CAM BKT	(x2)	
	31	GV40501-002A	SW NG CAM	(x2)	
	32	GV40502-002A	SPRING	(x2)	
	33	QYSBSF3010ZA	TAP SCREW	M3 x 10mm(x2)	
	34	QYSBSF3010ZA	TAP SCREW	M3 x 10mm(x2)	
	35	GV40503-001A	WASHER	(x2)	
	36	GV40504-002A	SCREW	(x2)	
	37	GV40515-001A	METAL PIN	(x2)	
	38	GV10262-001A	CASS HOLDER(A)		
	39	GV10261-001A	CASS HOLDER(B)		
	40	GV20344-001A	CASS LENS (A)		
	41	GV20343-001A	CASS LENS (B)		
	42	GV30705-002A	LENS ORNAMENT		
	43	GV40596-001A	DOOR SPRING(B)		
	44	GV40619-001A	DOOR SPRING(A)		
	45	GV40034-001A	DAMPER ASSY.	(x2)	
	46	QYSBSF3010ZA	TAP SCREW	M3 x 10mm(x8)	
	47	VKY4180-401	CASSETTE SPRING	(x4)	
	48	VKL7850-002	EJECT SAFTY(R)	(x2)	
	49	VKW5258-003	TORSION SPRING	(x2)	
	50	E65923-009	TAPP NG SCREW	(x2)	
	51	GV40618-001A	SLC BRACKET	(x2)	
	52	QYSBSFG3008ZA	TAP SCREW	M3 x 8mm(x3)	
	53	GV40035-002A	SCREW		
	54	GV30349-050A	SPACER		
	55	QYSBSF3010ZA	TAP SCREW	M3 x 10mm(x2)	
	56	GV10253-004A	BOTTOM CHASSIS		
	57	GV30706-001A	SUPPORT BKT.	(x3)	
	58	QYSBSG3006ZA	TAP SCREW	M3 x 6mm(x3)	
	59	GV10254-003A/S/	METAL COVER		
	60	QYSDSTL4008EA	TAP SCREW	M4 x 8mm(x4)	
⚠	61	QMPK210-205-JN	POWER CORD(EU)	2.05m BLACK	UG,UN,US,UW,UX
⚠	61	QMPR300-200-JC	POWER CORD(EU)	2m BLACK	UY
⚠	62	QZW0033-001	STRAIN RELIEF		
	63	QYSSST3008ZA	TAP SCREW	M3 x 8mm(x2)	
	64	QYSBSF3008ZA	TAP SCREW	M3 x 8mm	
	65	QYSBSGG3008EA	TAP SCREW	M3 x 8mm	
	66	QYSBSGG3008EA	TAP SCREW	M3 x 8mm	
	67	QYSBSGG3008EA	TAP SCREW	M3 x 8mm	
	68	GV30349-025A	SPACER		
	69	QYSBSF3008ZA	TAP SCREW	M3 x 8mm	
	70	QYSBSF3008ZA	TAP SCREW	M3 x 8mm	
	71	GV30694-004A	HEAT SINK		
	72	GV40488-001A	LEAF SPRING		
	73	QYSBSG3016EA	TAP SCREW	M3 x 16mm(x2)	

⚠	Symbol No.	Part No.	Part Name	Description	Local
	74	QYSBSG3016EA	TAP SCREW	M3 x 16mm(x2)	
	75	GV10255-015A	REAR PANEL		UN,US
	75	GV10255-013A	REAR PANEL		UW
	75	GV10255-016A	REAR PANEL		UG,UX
	75	GV10255-014A	REAR PANEL		UY
	76	GV10263-002A	REAR COVER		
	77	QAU0307-003	TUNER		
	78	GV30686-001A	FAN BKT.		
	79	QAR0317-001	FAN		
	80	GV30349-026A	SPACER		
	81	QYSBSGY3008EA	TAP SCREW	AUX	
	82	QYSBSGY3008EA	TAP SCREW	HEAT SINK(x4)	
	83	QYSBSGY3008EA	TAP SCREW	EARTH PLATE	
	84	QYSBSGY3008EA	TAP SCREW	OPTICAL JACK	
	85	QYSBSGY3008EA	TAP SCREW	COMP. JACK(x2)	
	86	QYSBSGY3008EA	TAP SCREW	TUNNER PACK(x2)	
	87	QYSBSGY3008EA	TAP SCREW	VIDEO JACK	
	88	QYSBSGY3008EA	TAP SCREW	SPK. JACK(x2)	
	89	QYSBSGY3008EA	TAP SCREW	MECHA CHASSIS(x2)	
	90	QYSBSGY3008EA	TAP SCREW	SUB WOOFER	
	91	QYSBSF3012EA	TAP SCREW	VOL. SELECTOR(x2)	
	92	QYSBSGY3008EA	TAP SCREW	METAL COVER(x8)	
	93	QYSBSGY3008EA	TAP SCREW	REAR COVER	
	94	LV41843-002A	LASER CAUTION		
	95	GV30687-002A	FL HOLDER		
	96	GV30349-021A	SPACER	(x2)	
	97	GV30349-049A	SPACER		
	98	GV40531-001A	LED HOLDER		
⚠	99	QQT0475-001	POWER TRANSF	T 1001	
⚠	100	QMF51W2-6R3-J8	FUSE	F 1001 6.3A AC250V	
⚠	101	QMF51W2-3R15-J8	FUSE	F 1002 3.15A AC250V	
⚠	102	QMF51W2-6R3-J8	FUSE	F 1003 6.3A AC250V	
⚠	103	QMF51W2-6R3-J8	FUSE	F 1004 6.3A AC250V	
⚠	104	QMF51W2-1R25-J8	FUSE	F 1005 1 25A AC250V	
⚠	105	QMF51W2-3R15-J8	FUSE	F 1006 3.15A AC250V	
⚠	106	QMF51W2-6R3-J8	FUSE	F 1007 6.3A AC250V	
⚠	107	QMF51W2-6R3-J8	FUSE	F 1008 6.3A AC250V	
	108	QUQH12-0910BJ-E	FFC WIRE	9pin 10cm	
	109	QUQH12-1010BJ-E	FFC WIRE	10pin 10cm	
	110	QUQH12-2512AJ-E	FFC WIRE	25pin 12cm	
	111	QUQH12-1316AJ-E	FFC WIRE	13pin 16cm	
	112	QUQH12-0808AJ-E	FFC WIRE	8pin 8cm	
	113	QUQH10-1910AJ-E	FFC WIRE	19pin 10cm	
	114	QUQH10-2823AJ-E	FFC WIRE	28pin 23cm	
	115	QUQH10-1016AJ-E	FFC WIRE	10pin 16cm	
	116	QUQH12-1118AJ-E	FFC WIRE	11pin 18cm	
	117	QUQH12-0516BJ-E	FFC WIRE	5pin 16cm	
	118	QUQH12-0813AJ-E	FFC WIRE	8pin 13cm	
	119	QUQH12-1118AJ-E	FFC WIRE	11pin 18cm	
	120	GV40641-001A	NOM LABEL		UW
	120	LV42938-001A	LABEL		UY
	121	GV40642-001A	CAUTION LABEL		UW

DVD mechanism assembly and parts list

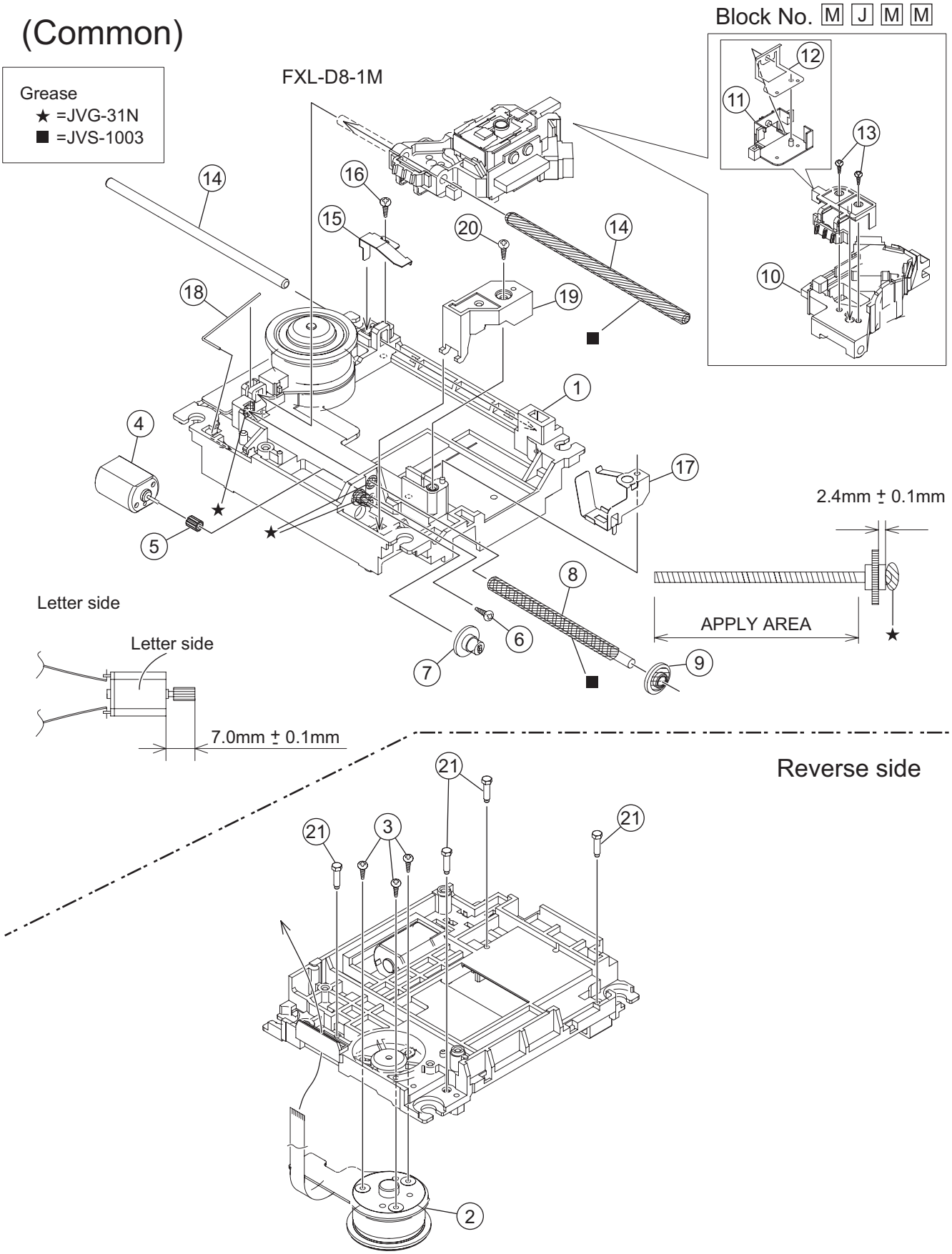

The parts without symbol number are not service.

DVD mechanism (Common)

Block No. [M][J][M][M]

⚠	Symbol No.	Part No.	Part Name	Description	Local
	1	LV10985-001A	C.TM CHASSIS		
	2	QAR0334-002	S.MOTOR		
	3	QYSPSPU1740ZA	SCREW	M1.7 x 4mm(x3)	
	4	QAR0144-003	MOTOR		
	5	VKS5557-001	F.M. GEAR		
	6	QYSPSPT2025ZA	SCREW	M2 x 2.5mm	
	7	LV35461-002A	MIDDLE GEAR		
	8	LV44040-001A	SCREW SHAFT		
	9	LV35462-001A	SCREW SHAFT GEA		
	10	QAL0667-001	DVD PICK		
	11	LV21869-001A	RACK ARM		
	12	LV35463-001A	RACK ARM SPRING		
	13	QYSPSFU1740ZA	TAP SCREW	M1.7 x 4mm(x2)	
	14	LV44041-001A	GUIDE SHAFT	(x2)	
	15	LV35464-001A	G.SHAFT ADJ.SP		
	16	QYSDSF2005ZA	TAP SCREW	M2 x 5mm	
	17	LV35465-001A	THRUST SPRING		
	18	LV44042-001A	ROD SPR NG		
	19	LV35467-001A	FEED BRACKET		
	20	QYSDSF2005ZA	TAP SCREW	M2 x 5mm	
	21	LV44046-001A	ADJUST SCREW	(x4)	

DVD changer mechanism assembly and parts list (DX-T9,DX-T7)

FMU-SM1-1M

Block No. M K M M

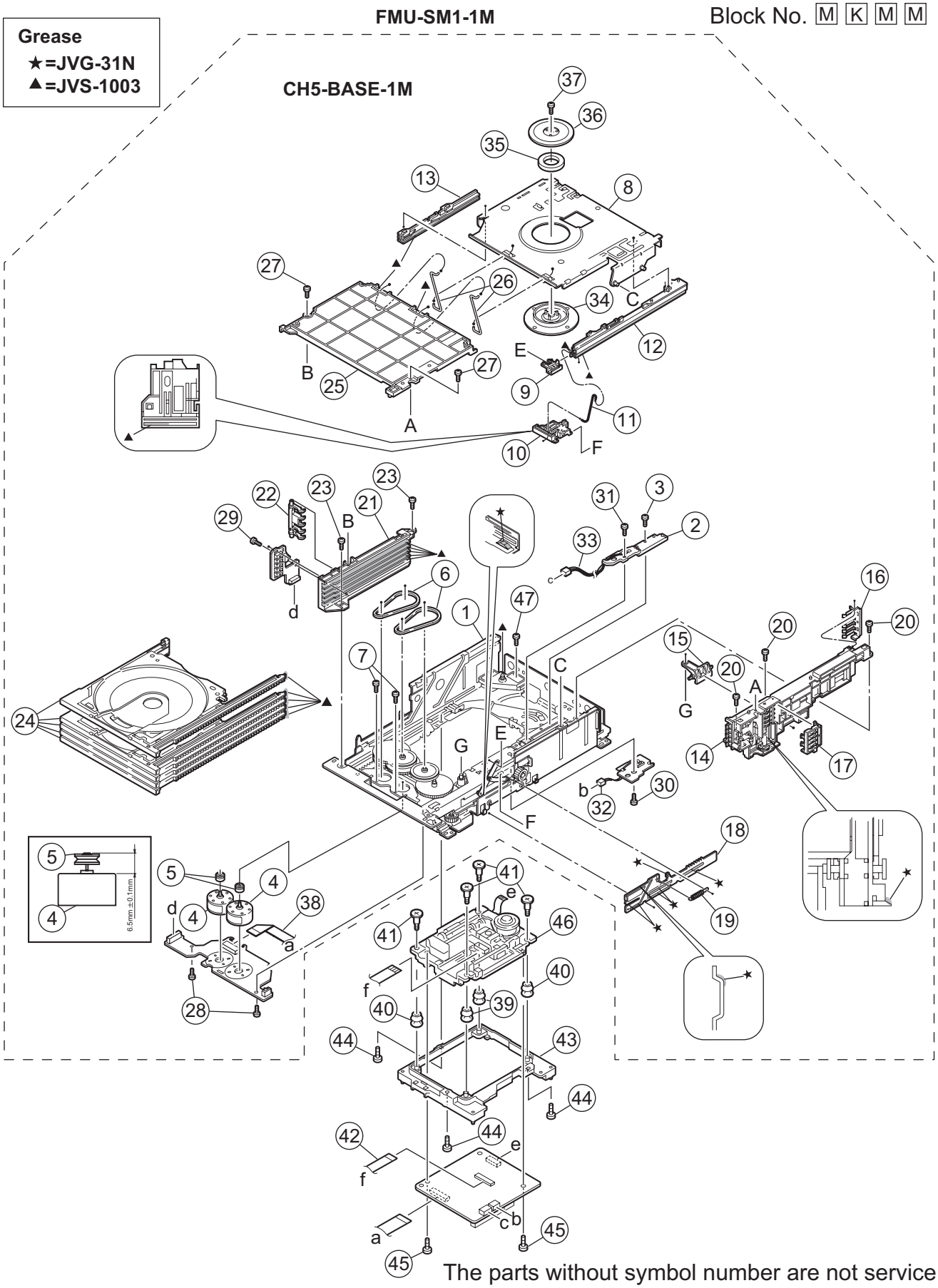

The parts without symbol number are not service.

DVD changer mechanism(FMU-SM1-1M) (DX-T9,DX-T7)

Block No. [M][K][M][M]

⚠	Symbol No.	Part No.	Part Name	Description	Local
	1	LV10913-004A	LOADER ASSY		
	2	QVY0027-B14	S V RESISTOR		
	3	QYSDST2004ZA	TAP SCREW	M2 x 4mm	
	4	QAR0164-001	MOTOR	(x2)	
	5	LV42340-001A	MOTOR PULLEY	(x2)	
	6	LV41431-002A	BELT	(x2)	
	7	QYSPSPU1725NA	SCREW	M1.7 x 2.5mm(x2)	
	8	LV33965-004A	LIFTER ASSY		
	9	LV33963-001A	HOOK		
	10	LV33964-002A	HOOK STOPPER		
	11	LV43285-001A	ROD (L)		
	12	LV21408-002A	RA L(R)		
	13	LV21409-002A	RA L(L)		
	14	LV21520-004A	SIDE(R) ASSY		
	15	LV33974-002A	SELECT LEVER		
	16	LV33977-002A	CLICK SPRING		
	17	LV33975-001A	GEAR COVER		
	18	LV33976-002A	ELEVATOR CAM		
	19	LV43287-001A	ELEVATOR SPRING		
	20	QYSDST2605ZA	TAP SCREW	M2.6 x 5mm(x3)	
	21	LV10749-002A	SIDE(L)		
	22	LV33980-002A	OPEN DET LEVER		
	23	QYSDST2605ZA	TAP SCREW	M2.6 x 5mm(x2)	
	24	LV10746-006A	TRAY ASSY	(x5)	
	25	LV10750-003A	TOP COVER		
	26	LV43289-003A	ROD	(x2)	
	27	QYSDSF2608ZA	TAP SCREW	M2.6 x 8mm(x2)	
	28	QYSDST2605ZA	TAP SCREW	M2.6 x 5mm(x2)	
	29	QYSDSF2608ZA	TAP SCREW	M2.6 x 8mm	
	30	QYSDST2605ZA	TAP SCREW	M2.6 x 5mm	
	31	QYSDST2004ZA	TAP SCREW	M2 x 4mm	
	32	WJM0330-002A-E	E-SI C WIRE C-F		
	33	WJM0331-001A-E	E-SI C WIRE C-F		
	34	LV32417-001A	CLAMPER		
	35	LV42930-003A	P.C MAGNET		
	36	LV33992-001A	DVD YOKE		
	37	LV41741-003A	SPECIAL SCREW		
	38	QUQ110-1508BJ	FFC WIRE	15pin 8cm	
	39	LV44043-002A	INSULATOR	(x2)	
	40	LV44043-003A	INSULATOR	(x2)	
	41	LV44045-001A	SPECIAL SCREW	(x4)	
	42	LV44092-002A	PICK FFC		
	43	LV10986-001A	TRAMECHA HOLDER		
	44	QYSDST2605ZA	TAP SCREW	M2.6 x 5mm(x3)	
	45	LV44209-001A	WASHER SCREW	(x2)	
	46	----------	DVD TRAMECHA		
	47	QYSDST2605ZA	SCREW	M2.6 x 5 mm	

DVD changer mechanism assembly and parts list (DX-T5)

FMU-SM1-11M

Block No. M S M M

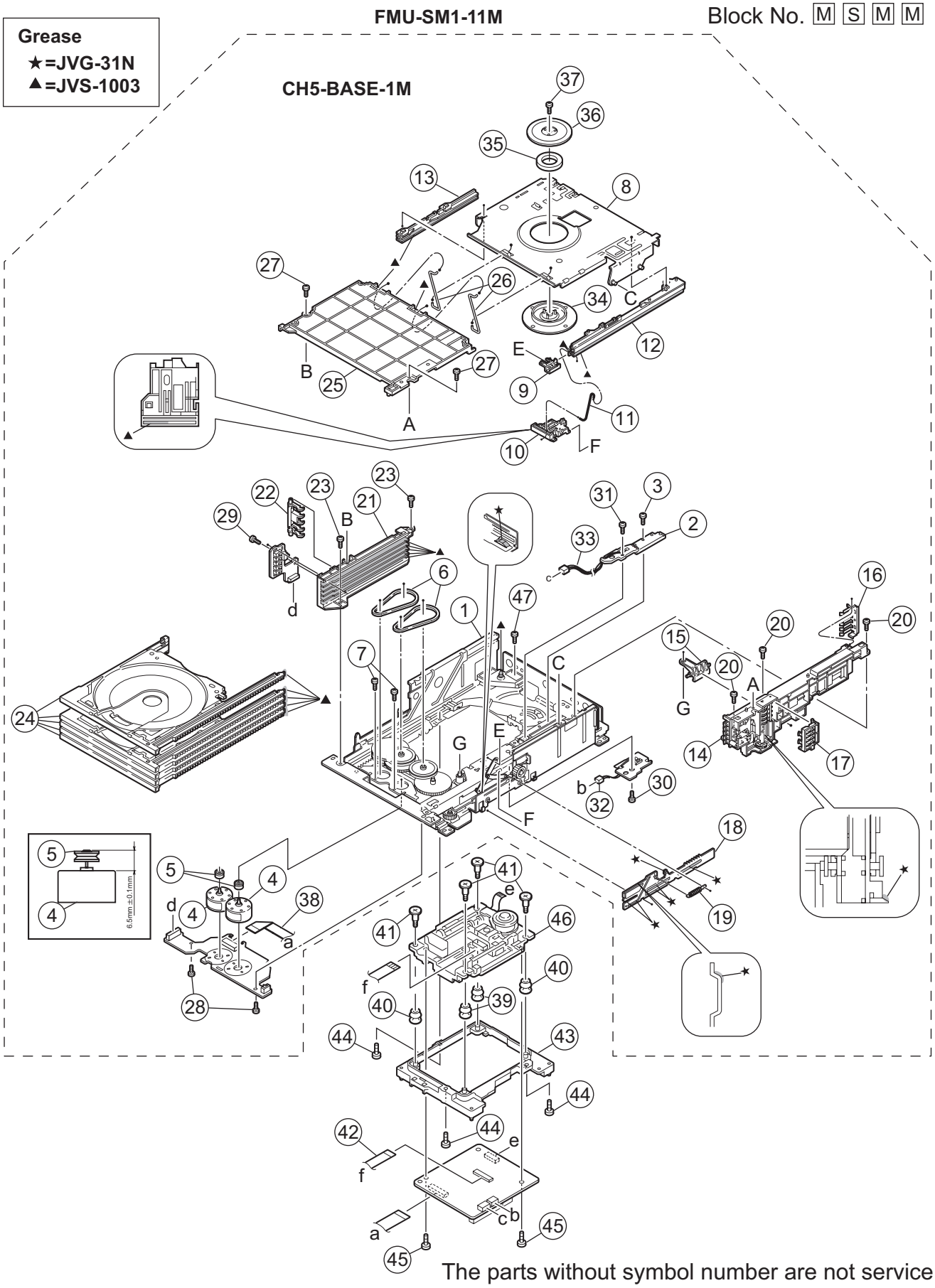

The parts without symbol number are not service.

DVD changer mechanism(FMU-SM1-11M) (DX-T5)

Block No. [M][S][M][M]

⚠	Symbol No.	Part No.	Part Name	Description	Local
	1	LV10913-004A	LOADER ASSY		
	2	QVY0027-B14	S V RESISTOR		
	3	QYSDST2004ZA	TAP SCREW	M2 x 4mm	
	4	QAR0164-001	MOTOR	(x2)	
	5	LV42340-001A	MOTOR PULLEY	(x2)	
	6	LV41431-002A	BELT	(x2)	
	7	QYSPSPU1725NA	SCREW	M1.7 x 2.5mm(x2)	
	8	LV33965-004A	LIFTER ASSY		
	9	LV33963-001A	HOOK		
	10	LV33964-002A	HOOK STOPPER		
	11	LV43285-001A	ROD (L)		
	12	LV21408-002A	RA L(R)		
	13	LV21409-002A	RA L(L)		
	14	LV21520-004A	SIDE(R) ASSY		
	15	LV33974-002A	SELECT LEVER		
	16	LV33977-002A	CLICK SPRING		
	17	LV33975-001A	GEAR COVER		
	18	LV33976-002A	ELEVATOR CAM		
	19	LV43287-001A	ELEVATOR SPRING		
	20	QYSDST2605ZA	TAP SCREW	M2.6 x 5mm(x3)	
	21	LV10749-002A	SIDE(L)		
	22	LV33980-002A	OPEN DET LEVER		
	23	QYSDST2605ZA	TAP SCREW	M2.6 x 5mm(x2)	
	24	LV10746-006A	TRAY ASSY	(x5)	
	25	LV10750-003A	TOP COVER		
	26	LV43289-003A	ROD	(x2)	
	27	QYSDSF2608ZA	TAP SCREW	M2.6 x 8mm(x2)	
	28	QYSDST2605ZA	TAP SCREW	M2.6 x 5mm(x2)	
	29	QYSDSF2608ZA	TAP SCREW	M2.6 x 8mm	
	30	QYSDST2605ZA	TAP SCREW	M2.6 x 5mm	
	31	QYSDST2004ZA	TAP SCREW	M2 x 4mm	
	32	WJM0330-002A-E	E-SI C WIRE C-F		
	33	WJM0331-001A-E	E-SI C WIRE C-F		
	34	LV32417-001A	CLAMPER		
	35	LV42930-003A	P.C MAGNET		
	36	LV33992-001A	DVD YOKE		
	37	LV41741-003A	SPECIAL SCREW		
	38	QUQ110-1508BJ	FFC WIRE	15pin 8cm	
	39	LV44043-002A	INSULATOR	(x2)	
	40	LV44043-003A	INSULATOR	(x2)	
	41	LV44045-001A	SPECIAL SCREW	(x4)	
	42	LV44092-002A	PICK FFC		
	43	LV10986-001A	TRAMECHA HOLDER		
	44	QYSDST2605ZA	TAP SCREW	M2.6 x 5mm(x3)	
	45	LV44209-001A	WASHER SCREW	(x2)	
	46	----------	DVD TRAMECHA		
	47	QYSDST2605ZA	SCREW	M2.6 x 5 mm	

Cassette mechanism assembly and parts list

Block No. M P M M

Cassette A (Common)

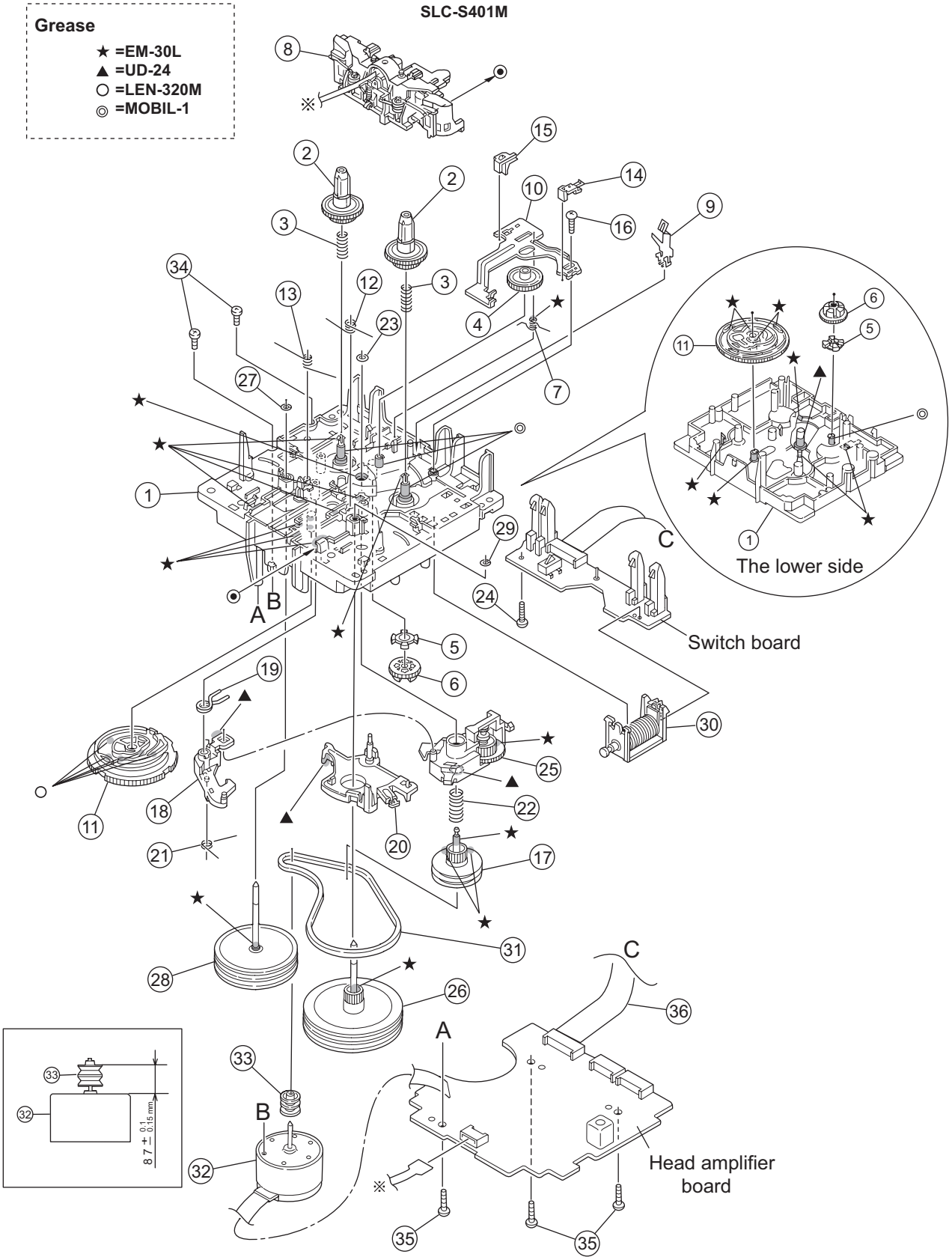

The parts without symbol number are not service.

Cassette mechanism(SLC-S401M)-Cassette A (Common)

Block No. [M][P][M][M]

⚠	Symbol No.	Part No.	Part Name	Description	Local
	1	VKS1165-00N	CHASSIS B. ASSY		
	2	VKS2274-002	REEL GEAR	(x2)	
	3	VKW5286-002	B.T. SPR NG	(x2)	
	4	VKS5559-001	PLAY IDLE GEAR		
	5	VKS5595-002	BLIND		
	6	VKS5560-003	FR IDLE GEAR		
	7	LV42013-001A	EARTH SPRING		
	8	VKS2279-00GSS	HEAD MOUNT ASSY		
	9	VKY3149-002	CASSETTE SP.		
	10	LV31786-004A	PLAY SW LEVER		
	11	VKS1166-003	CONTROL CAM		
	12	VKW5279-002	HEAD BASE SP(R)		
	13	VKW5280-001	HEAD BASE SP(L)		
	14	LV41584-001A	BRAKE(R)		
	15	LV41585-003A	BRAKE(L)		
	16	LV44098-001A	SPECIAL SCREW		
	17	VKS5603-00H	MAIN PULLEY ASS		
	18	VKS3785-001MM	FR ARM		
	19	VKW5284-002	SWING SPRING		
	20	VKS2278-003	TRIGGER ARM		
	21	VKW5301-001	FR SPRING		
	22	VKW5266-001	ELEVATOR SPRING		
	23	WDL214025	WASHER		
	24	QYSBSF2005ZA	TAP SCREW	M2 x 5mm	
	25	VKS3786-00G	CLUTCH ASSY		
	26	VKF3205-00B	F.WHEEL ASSY(R)		
	27	WDL183425	SLIT WASHER		
	28	VKF3207-00C	F.WHEEL ASSY(L)		
	29	WDL173525-6	SLIT WASHER		
	30	VKZ3174-00B	DC SOLENOID		
	31	LV42836-001A	CAPSTAN BELT		
	32	QAR0309-001	D.C MOTOR		
	33	VKR4761-003	MOTOR PULLEY		
	34	QYSPSP2604ZA	SCREW	M2.6 x 4mm(x2)	
	35	QYSBSF2608ZA	TAP SCREW	M2.6 x 8mm(x3)	
	36	QUQH12-0906BF	FFC WIRE	9pin 6cm	

Cassette mechanism assembly and parts list

Block No. M Q M M

Cassette B (Common)

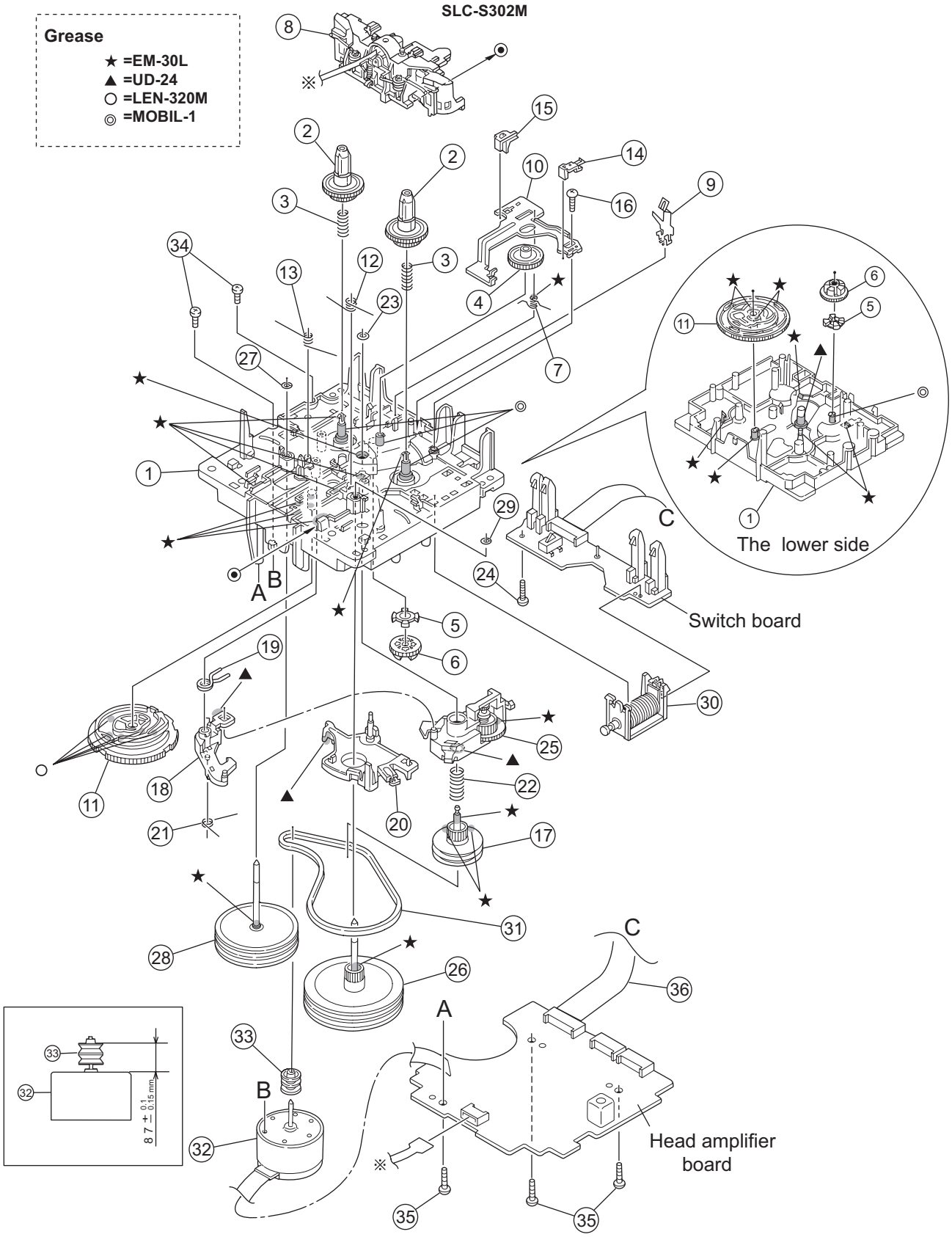

The parts without symbol number are not service.

Cassette mechanism(SLC-S302M)-CassetteB (Common)

Block No. [M][Q][M][M]

⚠	Symbol No.	Part No.	Part Name	Description	Local
	1	VKS1165-00N	CHASSIS B. ASSY		
	2	VKS2274-002	REEL GEAR	(x2)	
	3	VKW5286-002	B.T. SPR NG	(x2)	
	4	VKS5559-001	PLAY IDLE GEAR		
	5	VKS5595-002	BLIND		
	6	VKS5560-003	FR IDLE GEAR		
	7	LV42013-001A	EARTH SPRING		
	8	SLC-RP4SVM	HEAD MOUNT ASSY		
	9	VKY3149-002	CASSETTE SP.		
	10	LV31786-002A	PLAY LEVER		
	11	VKS1166-003	CONTROL CAM		
	12	VKW5279-002	HEAD BASE SP(R)		
	13	VKW5280-001	HEAD BASE SP(L)		
	14	LV41584-001A	BRAKE(R)		
	15	LV41585-003A	BRAKE(L)		
	16	QYSBSF2005Z	SCREW	2mm x 5mm	
	17	VKS5603-00G	MAIN PULLEY ASS		
	18	VKS3785-001MM	FR ARM		
	19	VKW5284-002	SWING SPRING		
	20	VKS2278-003	TRIGGER ARM		
	21	VKW5301-001	FR SPRING		
	22	VKW5266-001	ELEVATOR SPRING		
	23	WDL214025	WASHER		
	24	QYSBSF2005Z	SCREW	2mm x 5mm	
	25	VKS3786-00G	CLUTCH ASSY		
	26	VKF3205-00B	F.WHEEL ASSY(R)		
	27	WDL183425	SLIT WASHER		
	28	VKF3207-00C	F.WHEEL ASSY(L)		
	29	WDL173525-6	SLIT WASHER		
	30	VKZ3174-00B	DC SOLENOID		
	31	LV42836-001A	CAPSTAN BELT		
	32	MSI-5U2LWA	D.C MOTOR		
	33	VKR4761-003	MOTOR PULLEY		
	34	QYSPSP2604Z	SCREW	2.6mm x 4mm(x2)	
	35	QYSBSF2608Z	TAPPING SCREW	2.6mm x 8mm(x3)	
	36	QUQH12-0906BF	WIRE		

Electrical parts list

Amplifier board (DX-T9)

Block No. [0][1]

⚠ Symbol No.	Part No.	Part Name	Description	Local
⚠ IC301	STK413-430	IC		
⚠ IC302	KIA7809API	IC		
⚠ IC303	KIA7805API	IC		
⚠ IC304	KIA7810API	IC		
⚠ IC305	KIA278R05PI	TRANSISTOR		
⚠ IC306	KIA278R09PI	TRANSISTOR		
⚠ IC307	KIA317PI	IC		
⚠ IC308	KIA7805API	IC		
⚠ IC401	STK412-430	POWER I.C		
⚠ IC402	STK412-430	POWER I.C		
IC500	PT6305	FL DRIVER		
IC510	GP1UM281XKVF	IR DETECT UNIT		
Q3101	KTC3200/GL/-T	TRANSISTOR		
Q3102	KTA1023/OY/-T	TRANSISTOR		
Q3103	KTA1268/GL/-T	TRANSISTOR		
Q3104	KTC1027/OY/-T	TRANSISTOR		
Q3401	KTC3199/GL/-T	TRANSISTOR		
Q3501	KTC3199/GL/-T	TRANSISTOR		
Q3601	KTC3199/GL/-T	TRANSISTOR		
Q3901	KTC3203/OY/-T	TRANSISTOR		
Q3902	KRC102M-T	DIGI TRANSISTOR		
Q4101	KTC3199/GL/-T	TRANSISTOR		
Q4201	KTC3199/GL/-T	TRANSISTOR		
Q4401	KTC3200/GL/-T	TRANSISTOR		
Q4402	KTA1023/OY/-T	TRANSISTOR		
Q4403	KTA1268/GL/-T	TRANSISTOR		
Q4404	KTC1027/OY/-T	TRANSISTOR		
Q4601	KTC3199/GL/-T	TRANSISTOR		
Q4701	KTC3199/GL/-T	TRANSISTOR		
Q4901	KTC1027/OY/-T	TRANSISTOR		
Q4902	KTA1023/OY/-T	TRANSISTOR		
Q4903	KTC3199/GL/-T	TRANSISTOR		
Q4904	KTA1023/OY/-T	TRANSISTOR		
Q5004	KRC102M-T	DIGI TRANSISTOR		
Q5005	KRC102M-T	DIGI TRANSISTOR		
Q5006	KRC102M-T	DIGI TRANSISTOR		
Q5007	KRC102M-T	DIGI TRANSISTOR		
Q5008	KTA1023/OY/-T	TRANSISTOR		
Q5009	KRC102M-T	DIGI TRANSISTOR		
Q5010	KRC110M-T	TRANSISTOR		
Q5011	KTC3199/GL/-T	TRANSISTOR		
D3101	1SS119-041-T2	DIODE		
D3301	MTZJ15B-T2	Z DIODE		
D3302	MTZJ15B-T2	Z DIODE		
D3303	MTZJ36A-T2	Z DIODE		
D3304	MTZJ36A-T2	Z DIODE		
D3401	1SS119-041-T2	DIODE		
D3501	1SS119-041-T2	DIODE		
D3601	1SS119-041-T2	DIODE		
D3701	MTZJ5.6C-T2	Z DIODE		
D3811	MTZJ11B-T2	Z DIODE		
D3821	MTZJ11C-T2	Z DIODE		
D3831	1SS119-041-T2	DIODE		
D3832	MTZJ6.2B-T2	Z DIODE		
D3841	MTZJ11B-T2	Z DIODE		
D3901	MTZJ15A-T2	Z DIODE		
D3902	1SS119-041-T2	DIODE		
D4001	MTZJ15B-T2	Z DIODE		
D4002	MTZJ15B-T2	Z DIODE		
D4003	MTZJ36A-T2	Z DIODE		
D4004	MTZJ36A-T2	Z DIODE		
D4101	1SS119-041-T2	DIODE		
D4201	1SS119-041-T2	DIODE		
D4401	1SS119-041-T2	DIODE		
D4501	MTZJ15B-T2	Z DIODE		
D4502	MTZJ15B-T2	Z DIODE		
D4503	MTZJ36A-T2	Z DIODE		
D4504	MTZJ36A-T2	Z DIODE		
D4601	1SS119-041-T2	DIODE		
D4701	1SS119-041-T2	DIODE		

⚠ Symbol No.	Part No.	Part Name	Description	Local
D4901	1SS119-041-T2	DIODE		
D5004	SLI-343URC-W-T	LED		
D5005	SLI-343URC-W-T	LED		
D5006	SELU2E10C-P	LED		
D5007	SLR-343VC-T	LED		
C3101	QETN1AM-107Z	E CAPACITOR	100uF 10V M	
C3102	QFZ0212-104Z	M CAPACITOR	0.1uF	
C3103	QFZ0212-104Z	M CAPACITOR	0.1uF	
C3104	QETN1HM-105Z	E CAPACITOR	1uF 50V M	
C3201	QCBB1HK-221Y	C CAPACITOR	220pF 50V K	
C3202	QETN1HM-106Z	E CAPACITOR	10uF 50V M	
C3203	QCBB1HK-471Y	C CAPACITOR	470pF 50V K	
C3211	QCBB1HK-221Y	C CAPACITOR	220pF 50V K	
C3212	QETN1HM-106Z	E CAPACITOR	10uF 50V M	
C3213	QCBB1HK-471Y	C CAPACITOR	470pF 50V K	
C3221	QCBB1HK-221Y	C CAPACITOR	220pF 50V K	
C3222	QETN1HM-106Z	E CAPACITOR	10uF 50V M	
C3223	QCBB1HK-471Y	C CAPACITOR	470pF 50V K	
C3402	QCSB1HK-4R7Y	C CAPACITOR	4.7pF 50V K	
C3403	QETN1JM-476Z	E CAPACITOR	47uF 63V M	
C3404	QFLC1HJ-104Z	M CAPACITOR	0.1uF 50V J	
C3405	QFLC1HJ-104Z	M CAPACITOR	0.1uF 50V J	
C3502	QCSB1HK-4R7Y	C CAPACITOR	4.7pF 50V K	
C3503	QETN1JM-476Z	E CAPACITOR	47uF 63V M	
C3504	QFLC1HJ-104Z	M CAPACITOR	0.1uF 50V J	
C3505	QFLC1HJ-104Z	M CAPACITOR	0.1uF 50V J	
C3602	QCSB1HK-4R7Y	C CAPACITOR	4.7pF 50V K	
C3603	QETN1JM-476Z	E CAPACITOR	47uF 63V M	
C3604	QFLC1HJ-104Z	M CAPACITOR	0.1uF 50V J	
C3605	QFLC1HJ-104Z	M CAPACITOR	0.1uF 50V J	
C3701	QETN1EM-476Z	E CAPACITOR	47uF 25V M	
C3702	QETN1CM-107Z	E CAPACITOR	100uF 16V M	
C3811	QETN1EM-476Z	E CAPACITOR	47uF 25V M	
C3812	QETN1CM-107Z	E CAPACITOR	100uF 16V M	
C3821	QETN1EM-476Z	E CAPACITOR	47uF 25V M	
C3822	QETN1CM-107Z	E CAPACITOR	100uF 16V M	
C3831	QETN1EM-476Z	E CAPACITOR	47uF 25V M	
C3832	QETN1CM-107Z	E CAPACITOR	100uF 16V M	
C3841	QETN1EM-476Z	E CAPACITOR	47uF 25V M	
C3842	QETN1CM-107Z	E CAPACITOR	100uF 16V M	
C3851	QETN1EM-476Z	E CAPACITOR	47uF 25V M	
C3852	QETN1CM-107Z	E CAPACITOR	100uF 16V M	
C4102	QCSB1HK-4R7Y	C CAPACITOR	4.7pF 50V K	
C4103	QETN1JM-476Z	E CAPACITOR	47uF 63V M	
C4104	QFLC1HJ-104Z	M CAPACITOR	0.1uF 50V J	
C4105	QFLC1HJ-104Z	M CAPACITOR	0.1uF 50V J	
C4202	QCSB1HK-4R7Y	C CAPACITOR	4.7pF 50V K	
C4203	QETN1JM-476Z	E CAPACITOR	47uF 63V M	
C4204	QFLC1HJ-104Z	M CAPACITOR	0.1uF 50V J	
C4205	QFLC1HJ-104Z	M CAPACITOR	0.1uF 50V J	
C4301	QCBB1HK-221Y	C CAPACITOR	220pF 50V K	
C4302	QTE1V06-106Z	E CAPACITOR	10uF 35V	
C4311	QCBB1HK-221Y	C CAPACITOR	220pF 50V K	
C4312	QTE1V06-106Z	E CAPACITOR	10uF 35V	
C4313	QCBB1HK-471Y	C CAPACITOR	470pF 50V K	
C4401	QETN1AM-107Z	E CAPACITOR	100uF 10V M	
C4402	QFZ0212-104Z	M CAPACITOR	0.1uF	
C4403	QFZ0212-104Z	M CAPACITOR	0.1uF	
C4404	QETN1HM-105Z	E CAPACITOR	1uF 50V M	
C4405	QETN1HM-105Z	E CAPACITOR	1uF 50V M	
C4602	QCSB1HK-4R7Y	C CAPACITOR	4.7pF 50V K	
C4603	QETN1JM-476Z	E CAPACITOR	47uF 63V M	
C4604	QFLC1HJ-104Z	M CAPACITOR	0.1uF 50V J	
C4605	QFLC1HJ-104Z	M CAPACITOR	0.1uF 50V J	
C4702	QCSB1HK-4R7Y	C CAPACITOR	4.7pF 50V K	
C4703	QETN1JM-476Z	E CAPACITOR	47uF 63V M	
C4704	QFLC1HJ-104Z	M CAPACITOR	0.1uF 50V J	
C4705	QFLC1HJ-104Z	M CAPACITOR	0.1uF 50V J	
C4801	QCBB1HK-221Y	C CAPACITOR	220pF 50V K	
C4802	QTE1V06-106Z	E CAPACITOR	10uF 35V	
C4803	QCBB1HK-101Y	C CAPACITOR	100pF 50V K	
C4811	QCBB1HK-221Y	C CAPACITOR	220pF 50V K	
C4812	QTE1V06-106Z	E CAPACITOR	10uF 35V	
C4813	QCBB1HK-101Y	C CAPACITOR	100pF 50V K	
C4901	QETN1HM-106Z	E CAPACITOR	10uF 50V M	

⚠ Symbol No.	Part No.	Part Name	Descrip ion	Local
C4902	QETN1CM-476Z	E CAPACITOR	47uF 16V M	
C4903	QETN1HM-106Z	E CAPACITOR	10uF 50V M	
C5000	QETN1HM-226Z	E CAPACITOR	22uF 50V M	
C5001	QETN1HM-226Z	E CAPACITOR	22uF 50V M	
C5002	QDGB1HK-102Y	C CAPACITOR	1000pF 50V K	
C5003	QEKC1EM-106Z	E CAPACITOR	10uF 25V M	
C5004	QCBB1HK-104Y	C CAPACITOR	0.1uF 50V K	
C5005	QCBB1HK-101Y	C CAPACITOR	100pF 50V K	
C5006	QEKC1AM-107Z	E CAPACITOR	100uF 10V M	
C5007	QCBB1HK-104Y	C CAPACITOR	0.1uF 50V K	
R3101	QRE141J-222Y	C RESISTOR	2.2kΩ 1/4W J	
R3102	QRE141J-104Y	C RESISTOR	100kΩ 1/4W J	
R3103	QRE141J-103Y	C RESISTOR	10kΩ 1/4W J	
R3104	QRE141J-103Y	C RESISTOR	10kΩ 1/4W J	
⚠ R3105	QRJ146J-470X	UNF C RESISTOR	47Ω 1/4W J	
R3106	QRE141J-103Y	C RESISTOR	10kΩ 1/4W J	
R3107	QRE141J-103Y	C RESISTOR	10kΩ 1/4W J	
⚠ R3108	QRJ146J-470X	UNF C RESISTOR	47Ω 1/4W J	
R3201	QRE141J-102Y	C RESISTOR	1kΩ 1/4W J	
R3202	QRE141J-102Y	C RESISTOR	1kΩ 1/4W J	
R3203	QRE141J-102Y	C RESISTOR	1kΩ 1/4W J	
R3204	QRE141J-563Y	C RESISTOR	56kΩ 1/4W J	
R3205	QRE141J-563Y	C RESISTOR	56kΩ 1/4W J	
R3206	QRE141J-563Y	C RESISTOR	56kΩ 1/4W J	
R3301	QRE141J-682Y	C RESISTOR	6.8kΩ 1/4W J	
R3302	QRE141J-682Y	C RESISTOR	6.8kΩ 1/4W J	
R3303	QRE141J-682Y	C RESISTOR	6.8kΩ 1/4W J	
R3304	QRE141J-682Y	C RESISTOR	6.8kΩ 1/4W J	
⚠ R3305	QRJ146J-100X	UNF C RESISTOR	10Ω 1/4W J	
R3306	QRE141J-333Y	C RESISTOR	33kΩ 1/4W J	
⚠ R3401	QRZ0224-R22	EMIT RESISTOR	0.22Ω	
R3402	QRE141J-563Y	C RESISTOR	56kΩ 1/4W J	
⚠ R3403	QRJ146J-100X	UNF C RESISTOR	10Ω 1/4W J	
R3404	QRJ146J-100X	UNF C RESISTOR	10Ω 1/4W J	
R3405	QRE141J-102Y	C RESISTOR	1kΩ 1/4W J	
R3406	QRE141J-202Y	C RESISTOR	2kΩ 1/4W J	
R3407	QRE141J-473Y	C RESISTOR	47kΩ 1/4W J	
R3408	QRE141J-562Y	C RESISTOR	5.6kΩ 1/4W J	
⚠ R3409	QRJ146J-681X	UNF C RESISTOR	680Ω 1/4W J	
R3410	QRE141J-104Y	C RESISTOR	100kΩ 1/4W J	
R3411	QRE141J-202Y	C RESISTOR	2kΩ 1/4W J	
⚠ R3501	QRZ0224-R22	EMIT RESISTOR	0.22Ω	
R3502	QRE141J-563Y	C RESISTOR	56kΩ 1/4W J	
⚠ R3503	QRJ146J-100X	UNF C RESISTOR	10Ω 1/4W J	
⚠ R3504	QRJ146J-100X	UNF C RESISTOR	10Ω 1/4W J	
R3505	QRE141J-102Y	C RESISTOR	1kΩ 1/4W J	
R3506	QRE141J-202Y	C RESISTOR	2kΩ 1/4W J	
R3507	QRE141J-473Y	C RESISTOR	47kΩ 1/4W J	
R3508	QRE141J-562Y	C RESISTOR	5.6kΩ 1/4W J	
⚠ R3509	QRJ146J-681X	UNF C RESISTOR	680Ω 1/4W J	
R3510	QRE141J-104Y	C RESISTOR	100kΩ 1/4W J	
R3511	QRE141J-202Y	C RESISTOR	2kΩ 1/4W J	
⚠ R3601	QRZ0224-R22	EMIT RESISTOR	0.22Ω	
R3602	QRE141J-563Y	C RESISTOR	56kΩ 1/4W J	
⚠ R3603	QRJ146J-100X	UNF C RESISTOR	10Ω 1/4W J	
R3604	QRJ146J-100X	UNF C RESISTOR	10Ω 1/4W J	
R3605	QRE141J-102Y	C RESISTOR	1kΩ 1/4W J	
R3606	QRE141J-202Y	C RESISTOR	2kΩ 1/4W J	
R3607	QRE141J-473Y	C RESISTOR	47kΩ 1/4W J	
R3608	QRE141J-562Y	C RESISTOR	5.6kΩ 1/4W J	
⚠ R3609	QRJ146J-681X	UNF C RESISTOR	680Ω 1/4W J	
R3610	QRE141J-104Y	C RESISTOR	100kΩ 1/4W J	
R3611	QRE141J-202Y	C RESISTOR	2kΩ 1/4W J	
R3701	QRE141J-103Y	C RESISTOR	10kΩ 1/4W J	
R3831	QRE141J-102Y	C RESISTOR	1kΩ 1/4W J	
⚠ R3901	QRJ146J-4R7X	UNF C RESISTOR	4.7Ω 1/4W J	
R3902	QRE141J-242Y	C RESISTOR	2.4kΩ 1/4W J	
R3903	QRE141J-470Y	C RESISTOR	47Ω 1/4W J	
R3904	QRE141J-221Y	C RESISTOR	220Ω 1/4W J	
R3905	QRE141J-242Y	C RESISTOR	2.4kΩ 1/4W J	
R3906	QRE141J-103Y	C RESISTOR	10kΩ 1/4W J	
R3907	QRE141J-102Y	C RESISTOR	1kΩ 1/4W J	
R3908	QRE141J-103Y	C RESISTOR	10kΩ 1/4W J	
R4001	QRE141J-682Y	C RESISTOR	6.8kΩ 1/4W J	
R4002	QRE141J-682Y	C RESISTOR	6.8kΩ 1/4W J	
R4003	QRE141J-682Y	C RESISTOR	6.8kΩ 1/4W J	
R4004	QRE141J-682Y	C RESISTOR	6.8kΩ 1/4W J	

⚠ Symbol No.	Part No.	Part Name	Descrip ion	Local
⚠ R4005	QRJ146J-100X	UNF C RESISTOR	10Ω 1/4W J	
R4006	QRE141J-333Y	C RESISTOR	33kΩ 1/4W J	
⚠ R4101	QRZ0224-R22	EMIT RESISTOR	0 22Ω	
R4102	QRE141J-563Y	C RESISTOR	56kΩ 1/4W J	
⚠ R4103	QRJ146J-100X	UNF C RESISTOR	10Ω 1/4W J	
R4104	QRJ146J-100X	UNF C RESISTOR	10Ω 1/4W J	
R4105	QRE141J-102Y	C RESISTOR	1kΩ 1/4W J	
R4106	QRE141J-202Y	C RESISTOR	2kΩ 1/4W J	
R4107	QRE141J-473Y	C RESISTOR	47kΩ 1/4W J	
R4108	QRE141J-562Y	C RESISTOR	5.6kΩ 1/4W J	
R4109	QRJ146J-681X	UNF C RESISTOR	680Ω 1/4W J	
R4110	QRE141J-104Y	C RESISTOR	100kΩ 1/4W J	
R4111	QRE141J-202Y	C RESISTOR	2kΩ 1/4W J	
⚠ R4201	QRZ0224-R22	EMIT RESISTOR	0 22Ω	
R4202	QRE141J-563Y	C RESISTOR	56kΩ 1/4W J	
⚠ R4203	QRJ146J-100X	UNF C RESISTOR	10Ω 1/4W J	
R4204	QRJ146J-100X	UNF C RESISTOR	10Ω 1/4W J	
R4205	QRE141J-102Y	C RESISTOR	1kΩ 1/4W J	
R4206	QRE141J-202Y	C RESISTOR	2kΩ 1/4W J	
R4207	QRE141J-473Y	C RESISTOR	47kΩ 1/4W J	
R4208	QRE141J-562Y	C RESISTOR	5.6kΩ 1/4W J	
R4209	QRJ146J-681X	UNF C RESISTOR	680Ω 1/4W J	
R4210	QRE141J-104Y	C RESISTOR	100kΩ 1/4W J	
R4211	QRE141J-202Y	C RESISTOR	2kΩ 1/4W J	
R4302	QRE141J-563Y	C RESISTOR	56kΩ 1/4W J	
R4311	QRE141J-102Y	C RESISTOR	1kΩ 1/4W J	
R4312	QRE141J-563Y	C RESISTOR	56kΩ 1/4W J	
R4401	QRE141J-222Y	C RESISTOR	2 2kΩ 1/4W J	
R4402	QRE141J-104Y	C RESISTOR	100kΩ 1/4W J	
R4403	QRE141J-103Y	C RESISTOR	10kΩ 1/4W J	
R4404	QRE141J-103Y	C RESISTOR	10kΩ 1/4W J	
⚠ R4405	QRJ146J-470X	UNF C RESISTOR	47Ω 1/4W J	
R4406	QRE141J-103Y	C RESISTOR	10kΩ 1/4W J	
R4407	QRE141J-103Y	C RESISTOR	10kΩ 1/4W J	
⚠ R4408	QRJ146J-470X	UNF C RESISTOR	47Ω 1/4W J	
R4501	QRE141J-682Y	C RESISTOR	6 8kΩ 1/4W J	
R4502	QRE141J-682Y	C RESISTOR	6 8kΩ 1/4W J	
R4503	QRE141J-682Y	C RESISTOR	6 8kΩ 1/4W J	
R4504	QRE141J-682Y	C RESISTOR	6 8kΩ 1/4W J	
⚠ R4505	QRJ146J-100X	UNF C RESISTOR	10Ω 1/4W J	
R4506	QRE141J-333Y	C RESISTOR	33kΩ 1/4W J	
⚠ R4601	QRZ0224-R22	EMIT RESISTOR	0 22Ω	
R4602	QRE141J-563Y	C RESISTOR	56kΩ 1/4W J	
⚠ R4603	QRJ146J-100X	UNF C RESISTOR	10Ω 1/4W J	
R4604	QRJ146J-100X	UNF C RESISTOR	10Ω 1/4W J	
R4605	QRE141J-102Y	C RESISTOR	1kΩ 1/4W J	
R4606	QRE141J-202Y	C RESISTOR	2kΩ 1/4W J	
R4607	QRE141J-473Y	C RESISTOR	47kΩ 1/4W J	
R4608	QRE141J-562Y	C RESISTOR	5.6kΩ 1/4W J	
⚠ R4609	QRJ146J-681X	UNF C RESISTOR	680Ω 1/4W J	
R4610	QRE141J-104Y	C RESISTOR	100kΩ 1/4W J	
R4611	QRE141J-202Y	C RESISTOR	2kΩ 1/4W J	
⚠ R4701	QRZ0224-R22	EMIT RESISTOR	0 22Ω	
R4702	QRE141J-563Y	C RESISTOR	56kΩ 1/4W J	
⚠ R4703	QRJ146J-100X	UNF C RESISTOR	10Ω 1/4W J	
⚠ R4704	QRJ146J-100X	UNF C RESISTOR	10Ω 1/4W J	
R4705	QRE141J-102Y	C RESISTOR	1kΩ 1/4W J	
R4706	QRE141J-202Y	C RESISTOR	2kΩ 1/4W J	
R4707	QRE141J-473Y	C RESISTOR	47kΩ 1/4W J	
R4708	QRE141J-562Y	C RESISTOR	5.6kΩ 1/4W J	
⚠ R4709	QRJ146J-681X	UNF C RESISTOR	680Ω 1/4W J	
R4710	QRE141J-104Y	C RESISTOR	100kΩ 1/4W J	
R4711	QRE141J-202Y	C RESISTOR	2kΩ 1/4W J	
R4801	QRE141J-102Y	C RESISTOR	1kΩ 1/4W J	
R4802	QRE141J-563Y	C RESISTOR	56kΩ 1/4W J	
R4811	QRE141J-102Y	C RESISTOR	1kΩ 1/4W J	
R4812	QRE141J-563Y	C RESISTOR	56kΩ 1/4W J	
R4901	QRE141J-103Y	C RESISTOR	10kΩ 1/4W J	
R4902	QRE141J-104Y	C RESISTOR	100kΩ 1/4W J	
R4903	QRE141J-103Y	C RESISTOR	10kΩ 1/4W J	
R4904	QRE141J-104Y	C RESISTOR	100kΩ 1/4W J	
R4905	QRE141J-103Y	C RESISTOR	10kΩ 1/4W J	
R4906	QRE141J-104Y	C RESISTOR	100kΩ 1/4W J	
R5000	QRE141J-102Y	C RESISTOR	1kΩ 1/4W J	
R5001	QRE141J-102Y	C RESISTOR	1kΩ 1/4W J	
R5002	QRE141J-122Y	C RESISTOR	1 2kΩ 1/4W J	
R5003	QRE141J-152Y	C RESISTOR	1 5kΩ 1/4W J	
R5004	QRE141J-222Y	C RESISTOR	2 2kΩ 1/4W J	

⚠ Symbol No.	Part No.	Part Name	Description	Local
R5005	QRE141J-272Y	C RESISTOR	2.7kΩ 1/4W J	
R5006	QRE141J-392Y	C RESISTOR	3.9kΩ 1/4W J	
R5007	QRE141J-562Y	C RESISTOR	5.6kΩ 1/4W J	
R5008	QRE141J-103Y	C RESISTOR	10kΩ 1/4W J	
R5009	QRE141J-102Y	C RESISTOR	1kΩ 1/4W J	
R5010	QRE141J-102Y	C RESISTOR	1kΩ 1/4W J	
R5011	QRE141J-122Y	C RESISTOR	1.2kΩ 1/4W J	
R5012	QRE141J-152Y	C RESISTOR	1.5kΩ 1/4W J	
R5013	QRE141J-222Y	C RESISTOR	2.2kΩ 1/4W J	
R5014	QRE141J-272Y	C RESISTOR	2.7kΩ 1/4W J	
R5015	QRE141J-392Y	C RESISTOR	3.9kΩ 1/4W J	
R5016	QRE141J-102Y	C RESISTOR	1kΩ 1/4W J	
R5017	QRE141J-102Y	C RESISTOR	1kΩ 1/4W J	
R5018	QRE141J-122Y	C RESISTOR	1.2kΩ 1/4W J	
R5019	QRE141J-152Y	C RESISTOR	1.5kΩ 1/4W J	
R5020	QRE141J-222Y	C RESISTOR	2.2kΩ 1/4W J	
R5021	QRE141J-272Y	C RESISTOR	2.7kΩ 1/4W J	
R5022	QRE141J-392Y	C RESISTOR	3.9kΩ 1/4W J	
R5023	QRE141J-562Y	C RESISTOR	5.6kΩ 1/4W J	
R5024	QRE141J-102Y	C RESISTOR	1kΩ 1/4W J	
R5025	QRE141J-102Y	C RESISTOR	1kΩ 1/4W J	
R5026	QRE141J-122Y	C RESISTOR	1.2kΩ 1/4W J	
R5027	QRE141J-152Y	C RESISTOR	1.5kΩ 1/4W J	
R5028	QRE141J-222Y	C RESISTOR	2.2kΩ 1/4W J	
R5029	QRE141J-272Y	C RESISTOR	2.7kΩ 1/4W J	
R5030	QRE141J-392Y	C RESISTOR	3.9kΩ 1/4W J	
R5035	QRE141J-161Y	C RESISTOR	160Ω 1/4W J	
R5036	QRE141J-161Y	C RESISTOR	160Ω 1/4W J	
R5037	QRE141J-560Y	C RESISTOR	56Ω 1/4W J	
R5038	QRE141J-102Y	C RESISTOR	1kΩ 1/4W J	
R5039	QRE141J-102Y	C RESISTOR	1kΩ 1/4W J	
R5040	QRE141J-102Y	C RESISTOR	1kΩ 1/4W J	
R5041	QRE141J-102Y	C RESISTOR	1kΩ 1/4W J	
R5042	QRE141J-103Y	C RESISTOR	10kΩ 1/4W J	
R5043	QRE141J-271Y	C RESISTOR	270Ω 1/4W J	
R5044	QRE141J-821Y	C RESISTOR	820Ω 1/4W J	
R5045	QRE141J-104Y	C RESISTOR	100kΩ 1/4W J	
R5046	QRE141J-104Y	C RESISTOR	100kΩ 1/4W J	
L3401	QQLZ035-R39	COIL	0.39uH	
L3501	QQLZ035-R39	COIL	0.39uH	
L3601	QQLZ035-R39	COIL	0.39uH	
L4101	QQLZ035-R39	COIL	0.39uH	
L4201	QQLZ035-R39	COIL	0.39uH	
L4601	QQLZ035-R39	COIL	0.39uH	
L4701	QQLZ035-R39	COIL	0.39uH	
CN301	QGB2510K2-20	CONNECTOR	B-B (1-20)	
CN302	QGF1205C1-19	CONNECTOR	FFC/FPC (1-19)	
CN303	QGF1205F1-11	CONNECTOR	FFC/FPC (1-11)	
CN304	QGA2501F1-03	CONNECTOR	W-B (1-3)	
CN401	QGB2510K2-16	CONNECTOR	B-B (1-16)	
CN402	QGF1205C1-08	CONNECTOR	FFC/FPC (1-8)	
CN500	QGF1036F1-19	CONNECTOR	FFC/FPC (1-19)	
CN990	QGB2510J1-06	CONNECTOR	B-B (1-6)	
FL500	QLF0150-001	FL TUBE		
FW401	QUM154-10Z4Z4-E	FLAT WIRE		
FW500	QUM153-18DGZ4-E	FLAT WIRE		
J990	QNB0263-001	SPK TERMINAL		
S5000	QSW1121-001Z	PUSH SW I M		
S5001	QSW1121-001Z	PUSH SW I M		
S5002	QSW1121-001Z	PUSH SW I M		
S5003	QSW1121-001Z	PUSH SW I M		
S5004	QSW1121-001Z	PUSH SW I M		
S5005	QSW1121-001Z	PUSH SW I M		
S5006	QSW1121-001Z	PUSH SW I M		
S5007	QSW1121-001Z	PUSH SW I M		
S5008	QSW1121-001Z	PUSH SW I M		
S5009	QSW1121-001Z	PUSH SW I M		
S5010	QSW1121-001Z	PUSH SW I M		
S5011	QSW1121-001Z	PUSH SW I M		
S5012	QSW1121-001Z	PUSH SW I M		
S5013	QSW1121-001Z	PUSH SW I M		
S5014	QSW1121-001Z	PUSH SW I M		
S5015	QSW1121-001Z	PUSH SW I M		
S5016	QSW1121-001Z	PUSH SW I M		
S5017	QSW1121-001Z	PUSH SW I M		
S5018	QSW1121-001Z	PUSH SW I M		

⚠ Symbol No.	Part No.	Part Name	Description	Local
S5019	QSW1121-001Z	PUSH SW I M		
S5020	QSW1121-001Z	PUSH SW I M		
S5021	QSW1121-001Z	PUSH SW I M		
S5022	QSW1121-001Z	PUSH SW I M		
S5023	QSW1121-001Z	PUSH SW I M		
S5024	QSW1121-001Z	PUSH SW I M		
S5025	QSW1121-001Z	PUSH SW I M		
S5026	QSW1121-001Z	PUSH SW I M		
S5027	QSW1121-001Z	PUSH SW I M		
S5028	QSW1121-001Z	PUSH SW I M		
S5029	QSW1121-001Z	PUSH SW I M		
S5030	QSW1121-001Z	PUSH SW I M		
S5031	QSW1121-001Z	PUSH SW I M		
S5032	QSW1121-001Z	PUSH SW I M		
S5033	QSW1121-001Z	PUSH SW I M		
S5034	QSW1121-001Z	PUSH SW I M		
SP500	GV40205-004A	IC HOLDER		

Main board (DX-T9)

Block No. [0][2]

⚠ Symbol No.	Part No.	Part Name	Description	Local
IC760	SN74AHCT08NS-X	IC		
IC770	MN101C49GFS1	MASK ROM		
IC771	BR24L02F-W-X	IC		
IC800	RC4558D-X	IC		
IC801	RC4558D-X	IC		
IC810	CD4066BM-X	IC		
IC820	LC75342M-X	IC		
IC830	RC4558D-X	IC		
IC850	M65851FP	IC		
IC860	JCV8011-X	IC		
IC870	LC75341M-X	IC		
IC880	LC75341M-X	IC		
IC881	RC4558D-X	IC		
IC901	RC4580ID-X	IC		
Q7000	KTC3199/GL/-T	TRANSISTOR		
Q7010	KTC3199/GL/-T	TRANSISTOR		
Q7080	KRC107S-X	DIGI TRANSISTOR		
Q7081	KRC111S-X	TRANSISTOR		
Q7788	KRA102S-X	DIGI TRANSISTOR		
Q7794	KRA102S-X	DIGI TRANSISTOR		
Q7798	KRA102S-X	DIGI TRANSISTOR		
Q8000	2SD2114K/VW/-X	TRANSISTOR		
Q8030	KTC3875/YG/-X	SI TRANSISTOR		
Q8031	KTC3875/YG/-X	SI TRANSISTOR		
Q8032	KTC3875/YG/-X	SI TRANSISTOR		
Q8040	2SD2114K/VW/-X	TRANSISTOR		
Q8070	2SD2114K/VW/-X	TRANSISTOR		
Q8071	2SD2114K/VW/-X	TRANSISTOR		
Q8080	2SD2114K/VW/-X	TRANSISTOR		
Q8081	2SD2114K/VW/-X	TRANSISTOR		
Q8100	2SD2114K/VW/-X	TRANSISTOR		
Q8130	KTC3875/YG/-X	SI TRANSISTOR		
Q8131	KTC3875/YG/-X	SI TRANSISTOR		
Q8132	KTC3875/YG/-X	SI TRANSISTOR		
Q8140	2SD2114K/VW/-X	TRANSISTOR		
Q8170	2SD2114K/VW/-X	TRANSISTOR		
Q8171	2SD2114K/VW/-X	TRANSISTOR		
Q8180	2SD2114K/VW/-X	TRANSISTOR		
Q8211	KRC104S-X	TRANSISTOR		
Q8212	KRC104S-X	TRANSISTOR		
Q8260	KTC3199/GL/-T	TRANSISTOR		
Q8524	KTC1027/OY/-T	TRANSISTOR		
Q8900	KRA104S-X	DIGI TRANSISTOR		
Q9001	2SD2114K/VW/-X	TRANSISTOR		
Q9002	2SD2114K/VW/-X	TRANSISTOR		
Q9003	KRC111S-X	TRANSISTOR		
Q9004	KTA1504/YG/-X	SI TRANSISTOR		
Q9100	KRA111S-X	D. TRANSISTOR		
Q9101	2SD2114K/VW/-X	TRANSISTOR		
Q9102	2SD2114K/VW/-X	TRANSISTOR		

⚠ Symbol No.	Part No.	Part Name	Descrip ion	Local
Q9103	2SD2114K/VW/-X	TRANSISTOR		
Q9104	2SD2114K/VW/-X	TRANSISTOR		
D7000	1SS133-T2	SI DIODE		
D7001	1SS133-T2	SI DIODE		
D7011	1SS133-T2	SI DIODE		
D7012	1SS133-T2	SI DIODE		
D7050	MTZJ5.1B-T2	Z DIODE		
D7080	1SS133-T2	SI DIODE		
D7081	MTZJ4.7B-T2	Z DIODE		
D7082	1SS133-T2	SI DIODE		
D7151	1SS133-T2	SI DIODE		
D7152	1SS133-T2	SI DIODE		
D7153	1SS133-T2	SI DIODE		
D7154	1SS133-T2	SI DIODE		
D7155	1SS133-T2	SI DIODE		
D7156	1SS133-T2	SI DIODE		
D7157	1SS133-T2	SI DIODE		
D7330	1N4003S-T5	SI DIODE		
D7350	1N4003S-T5	SI DIODE		
D7390	1SS133-T2	SI DIODE		
D7711	1SS133-T2	SI DIODE		
D7713	1N4003S-T5	SI DIODE		
D8230	1SS133-T2	SI DIODE		
D8524	MTZJ5.6B-T2	Z DIODE		
D8900	1SS133-T2	SI DIODE		
D8901	1SS133-T2	SI DIODE		
D9001	1SS133-T2	SI DIODE		
D9002	1SS133-T2	SI DIODE		
D9100	MTZJ2.4B-T2	Z DIODE		
C7050	QETN1HM-475Z	E CAPACITOR	4.7uF 50V M	
C7080	NCB31HK-102X	C CAPACITOR	1000pF 50V K	
C7082	QETN1HM-475Z	E CAPACITOR	4.7uF 50V M	
C7083	NCB31HK-103X	C CAPACITOR	0.01uF 50V K	
C7084	QETN0JM-227Z	E CAPACITOR	220uF 6.3V M	
C7085	QETN0JM-108Z	E CAPACITOR	1000uF 6.3V M	
C7710	QCBB1HK-103Y	C CAPACITOR	0.01uF 50V K	
C7711	QETN1CM-107Z	E CAPACITOR	100uF 16V M	
C7712	NCS31HJ-180X	C CAPACITOR	18pF 50V J	
C7713	NCS31HJ-180X	C CAPACITOR	18pF 50V J	
C7788	QETN1HM-106Z	E CAPACITOR	10uF 50V M	
C7794	QETN1EM-476Z	E CAPACITOR	47uF 25V M	
C7798	QETN1AM-227Z	E CAPACITOR	220uF 10V M	
C8000	QTE1V06-106Z	E CAPACITOR	10uF 35V	
C8001	QTE1V06-106Z	E CAPACITOR	10uF 35V	
C8002	QTE1V06-106Z	E CAPACITOR	10uF 35V	
C8003	NCS31HJ-151X	C CAPACITOR	150pF 50V J	
C8020	QETN1HM-475Z	E CAPACITOR	4.7uF 50V M	
C8021	QETN1HM-475Z	E CAPACITOR	4.7uF 50V M	
C8022	QETN1HM-475Z	E CAPACITOR	4.7uF 50V M	
C8023	QETN1HM-475Z	E CAPACITOR	4.7uF 50V M	
C8025	QTE1H28-106Z	E CAPACITOR	10uF 50V	
C8026	QFLC1HJ-562Z	M CAPACITOR	5600pF 50V J	
C8027	QFLC1HJ-104Z	M CAPACITOR	0.1uF 50V J	
C8028	QFLC1HJ-104Z	M CAPACITOR	0.1uF 50V J	
C8030	QFVF1HJ-224Z	MF CAPACITOR	0.22uF 50V J	
C8031	QFLC1HJ-104Z	M CAPACITOR	0.1uF 50V J	
C8032	QTE1C06-226Z	E CAPACITOR	22uF 16V	
C8060	QTE1V06-106Z	E CAPACITOR	10uF 35V	
C8061	QTE1V06-106Z	E CAPACITOR	10uF 35V	
C8062	QTE1V06-106Z	E CAPACITOR	10uF 35V	
C8070	QETN1HM-106Z	E CAPACITOR	10uF 50V M	
C8072	QETN1HM-106Z	E CAPACITOR	10uF 50V M	
C8074	QETN1HM-105Z	E CAPACITOR	1uF 50V M	
C8076	QETN1HM-104Z	E CAPACITOR	0.1uF 50V M	
C8080	QETN1HM-106Z	E CAPACITOR	10uF 50V M	
C8082	QETN1HM-104Z	E CAPACITOR	0.1uF 50V M	
C8083	QETN1HM-104Z	E CAPACITOR	0.1uF 50V M	
C8084	QETN1HM-105Z	E CAPACITOR	1uF 50V M	
C8086	QETN1HM-104Z	E CAPACITOR	0.1uF 50V M	
C8092	NRSA63J-822X	MG RESISTOR	8.2kΩ 1/16W J	
C8100	QTE1V06-106Z	E CAPACITOR	10uF 35V	
C8101	QTE1V06-106Z	E CAPACITOR	10uF 35V	
C8102	QTE1V06-106Z	E CAPACITOR	10uF 35V	
C8103	NCS31HJ-151X	C CAPACITOR	150pF 50V J	
C8120	QETN1HM-475Z	E CAPACITOR	4.7uF 50V M	
C8121	QETN1HM-475Z	E CAPACITOR	4.7uF 50V M	

⚠ Symbol No.	Part No.	Part Name	Descrip ion	Local
C8122	QETN1HM-475Z	E CAPACITOR	4.7uF 50V M	
C8123	QETN1HM-475Z	E CAPACITOR	4.7uF 50V M	
C8125	QTE1H28-106Z	E CAPACITOR	10uF 50V	
C8126	QFLC1HJ-562Z	M CAPACITOR	5600pF 50V J	
C8127	QFLC1HJ-104Z	M CAPACITOR	0.1uF 50V J	
C8128	QFLC1HJ-104Z	M CAPACITOR	0.1uF 50V J	
C8130	QFVF1HJ-224Z	MF CAPACITOR	0 22uF 50V J	
C8131	QFLC1HJ-104Z	M CAPACITOR	0.1uF 50V J	
C8132	QTE1C06-226Z	E CAPACITOR	22uF 16V	
C8160	QTE1V06-106Z	E CAPACITOR	10uF 35V	
C8161	QTE1V06-106Z	E CAPACITOR	10uF 35V	
C8162	QTE1V06-106Z	E CAPACITOR	10uF 35V	
C8170	QETN1HM-106Z	E CAPACITOR	10uF 50V M	
C8172	QETN1HM-106Z	E CAPACITOR	10uF 50V M	
C8173	QETN1HM-104Z	E CAPACITOR	0.1uF 50V M	
C8174	QETN1HM-105Z	E CAPACITOR	1uF 50V M	
C8176	QETN1HM-104Z	E CAPACITOR	0.1uF 50V M	
C8180	QFLC1HJ-123Z	M CAPACITOR	0 012uF 50V J	
C8181	QFLC1HJ-104Z	M CAPACITOR	0.1uF 50V J	
C8183	QETN1HM-224Z	E CAPACITOR	0 22uF 50V M	
C8184	QETN1HM-106Z	E CAPACITOR	10uF 50V M	
C8185	QTE1V06-106Z	E CAPACITOR	10uF 35V	
C8192	NRSA63J-822X	MG RESISTOR	8 2kΩ 1/16W J	
C8202	QETN1HM-106Z	E CAPACITOR	10uF 50V M	
C8203	QFLC1HJ-223Z	M CAPACITOR	0 022uF 50V J	
C8204	QFLC1HJ-223Z	M CAPACITOR	0 022uF 50V J	
C8221	QCBB1HK-103Y	C CAPACITOR	0 01uF 50V K	
C8222	QTE1C06-107Z	E CAPACITOR	100uF 16V	
C8230	QETN1EM-476Z	E CAPACITOR	47uF 25V M	
C8232	QETN1HM-105Z	E CAPACITOR	1uF 50V M	
C8233	QFLC1HJ-683Z	M CAPACITOR	0 068uF 50V J	
C8261	QETN1EM-476Z	E CAPACITOR	47uF 25V M	
C8262	QFLC1HJ-223Z	M CAPACITOR	0 022uF 50V J	
C8263	QETN1HM-225Z	E CAPACITOR	2 2uF 50V M	
C8264	QETN1HM-106Z	E CAPACITOR	10uF 50V M	
C8265	QETN1HM-106Z	E CAPACITOR	10uF 50V M	
C8266	QETN1HM-475Z	E CAPACITOR	4.7uF 50V M	
C8267	QETN1EM-336Z	E CAPACITOR	33uF 25V M	
C8268	QETN1HM-224Z	E CAPACITOR	0 22uF 50V M	
C8269	QETN1HM-105Z	E CAPACITOR	1uF 50V M	
C8272	QETN1CM-107Z	E CAPACITOR	100uF 16V M	
C8282	QETN1CM-107Z	E CAPACITOR	100uF 16V M	
C8360	QETN1HM-475Z	E CAPACITOR	4.7uF 50V M	
C8361	QETN1HM-475Z	E CAPACITOR	4.7uF 50V M	
C8362	QETN1HM-474Z	E CAPACITOR	0.47uF 50V M	
C8363	QETN1EM-476Z	E CAPACITOR	47uF 25V M	
C8501	QFLC1HJ-152Z	M CAPACITOR	1500pF 50V J	
C8503	QFLC1HJ-154Z	M CAPACITOR	0.15uF 50V J	
C8504	QFLC1HJ-152Z	M CAPACITOR	1500pF 50V J	
C8506	QETN1HM-225Z	E CAPACITOR	2 2uF 50V M	
C8508	QFLC1HJ-102Z	M CAPACITOR	1000pF 50V J	
C8509	QFLC1HJ-332Z	M CAPACITOR	3300pF 50V J	
C8512	QETN1HM-225Z	E CAPACITOR	2 2uF 50V M	
C8513	QETN1HM-105Z	E CAPACITOR	1uF 50V M	
C8514	QFLC1HJ-102Z	M CAPACITOR	1000pF 50V J	
C8515	QFLC1HJ-472Z	M CAPACITOR	4700pF 50V J	
C8516	QFLC1HJ-683Z	M CAPACITOR	0 068uF 50V J	
C8517	QFLC1HJ-104Z	M CAPACITOR	0.1uF 50V J	
C8518	QFLC1HJ-104Z	M CAPACITOR	0.1uF 50V J	
C8520	QFLC1HJ-683Z	M CAPACITOR	0 068uF 50V J	
C8522	QETN1EM-476Z	E CAPACITOR	47uF 25V M	
C8523	QFLC1HJ-104Z	M CAPACITOR	0.1uF 50V J	
C8524	QETN1CM-107Z	E CAPACITOR	100uF 16V M	
C8525	QETN1CM-107Z	E CAPACITOR	100uF 16V M	
C8530	QFLC1HJ-104Z	M CAPACITOR	0.1uF 50V J	
C8539	QETN1HM-104Z	E CAPACITOR	0.1uF 50V M	
C8540	QFLC1HJ-102Z	M CAPACITOR	1000pF 50V J	
C8541	QFLC1HJ-472Z	M CAPACITOR	4700pF 50V J	
C8542	QFLC1HJ-683Z	M CAPACITOR	0 068uF 50V J	
C8544	QFLC1HJ-104Z	M CAPACITOR	0.1uF 50V J	
C8545	QFLC1HJ-104Z	M CAPACITOR	0.1uF 50V J	
C8546	QFLC1HJ-683Z	M CAPACITOR	0 068uF 50V J	
C8548	QFLC1HJ-102Z	M CAPACITOR	1000pF 50V J	
C8550	QFLC1HJ-472Z	M CAPACITOR	4700pF 50V J	
C8551	QETN1HM-105Z	E CAPACITOR	1uF 50V M	
C8553	QETN1HM-106Z	E CAPACITOR	10uF 50V M	
C8554	QFLC1HJ-104Z	M CAPACITOR	0.1uF 50V J	
C8555	QETN1CM-107Z	E CAPACITOR	100uF 16V M	

⚠ Symbol No.	Part No.	Part Name	Description	Local
C8572	QFLC1HJ-223Z	M CAPACITOR	0.022uF 50V J	
C8574	QTE1V06-106Z	E CAPACITOR	10uF 35V	
C8575	QTE1V06-106Z	E CAPACITOR	10uF 35V	
C8576	QFLC1HJ-154Z	M CAPACITOR	0.15uF 50V J	
C8577	QETN1HM-104Z	E CAPACITOR	0.1uF 50V M	
C8578	QETN1HM-105Z	E CAPACITOR	1uF 50V M	
C8579	QETN1HM-105Z	E CAPACITOR	1uF 50V M	
C8580	QFLC1HJ-154Z	M CAPACITOR	0.15uF 50V J	
C8900	QETN1HM-105Z	E CAPACITOR	1uF 50V M	
C8902	QETN1HM-106Z	E CAPACITOR	10uF 50V M	
C8903	QETN1HM-106Z	E CAPACITOR	10uF 50V M	
C9000	NCB21HK-473X	C CAPACITOR	0.047uF 50V K	
C9001	QETN1HM-104Z	E CAPACITOR	0.1uF 50V M	
C9002	NCS31HJ-681X	C CAPACITOR	680pF 50V J	
C9003	QEKC1HM-105Z	E CAPACITOR	1uF 50V M	
C9004	QEKC1HM-104Z	E CAPACITOR	0.1uF 50V M	
C9005	QEKC1HM-335Z	E CAPACITOR	3.3uF 50V M	
C9006	QETN1EM-336Z	E CAPACITOR	33uF 25V M	
C9007	QEKC1HM-104Z	E CAPACITOR	0.1uF 50V M	
C9008	QETN1HM-104Z	E CAPACITOR	0.1uF 50V M	
C9009	QETN1EM-476Z	E CAPACITOR	47uF 25V M	
C9010	QEKC1CM-107Z	E CAPACITOR	100uF 16V M	
C9021	NCB31HK-102X	C CAPACITOR	1000pF 50V K	
C9022	NCB31HK-102X	C CAPACITOR	1000pF 50V K	
C9100	QDGB1HK-102Y	C CAPACITOR	1000pF 50V K	
C9101	QDGB1HK-102Y	C CAPACITOR	1000pF 50V K	
C9102	QDGB1HK-102Y	C CAPACITOR	1000pF 50V K	
C9103	QDXB1CM-392Y	C CAPACITOR	3900pF 16V M	
C9104	QDXB1CM-392Y	C CAPACITOR	3900pF 16V M	
C9105	QDGB1HK-102Y	C CAPACITOR	1000pF 50V K	
R7000	QRE141J-222Y	C RESISTOR	2.2kΩ 1/4W J	
R7001	QRL01DJ-151X	OMF RESISTOR	150Ω 1W J	
R7002	QRL01DJ-151X	OMF RESISTOR	150Ω 1W J	
R7003	QRL01DJ-151X	OMF RESISTOR	150Ω 1W J	
R7004	QRL01DJ-151X	OMF RESISTOR	150Ω 1W J	
R7005	QRL01DJ-151X	OMF RESISTOR	150Ω 1W J	
R7006	QRL01DJ-151X	OMF RESISTOR	150Ω 1W J	
R7010	QRE141J-222Y	C RESISTOR	2.2kΩ 1/4W J	
R7011	QRL01DJ-151X	OMF RESISTOR	150Ω 1W J	
R7012	QRL01DJ-151X	OMF RESISTOR	150Ω 1W J	
R7013	QRL01DJ-151X	OMF RESISTOR	150Ω 1W J	
R7014	QRL01DJ-151X	OMF RESISTOR	150Ω 1W J	
R7015	QRL01DJ-151X	OMF RESISTOR	150Ω 1W J	
R7016	QRL01DJ-151X	OMF RESISTOR	150Ω 1W J	
R7050	QRE141J-563Y	C RESISTOR	56kΩ 1/4W J	
R7080	NRSA63J-223X	MG RESISTOR	22kΩ 1/16W J	
R7081	NRSA63J-103X	MG RESISTOR	10kΩ 1/16W J	
R7082	NRSA63J-102X	MG RESISTOR	1kΩ 1/16W J	
R7083	NRSA63J-222X	MG RESISTOR	2.2kΩ 1/16W J	
R7084	NRSA63J-681X	MG RESISTOR	680Ω 1/16W J	
R7085	NRSA63J-681X	MG RESISTOR	680Ω 1/16W J	
R7151	QRE141J-123Y	C RESISTOR	12kΩ 1/4W J	
R7152	QRE141J-123Y	C RESISTOR	12kΩ 1/4W J	
R7153	QRE141J-123Y	C RESISTOR	12kΩ 1/4W J	
R7154	QRE141J-123Y	C RESISTOR	12kΩ 1/4W J	
R7155	QRE141J-123Y	C RESISTOR	12kΩ 1/4W J	
R7156	QRE141J-123Y	C RESISTOR	12kΩ 1/4W J	
R7157	QRE141J-123Y	C RESISTOR	12kΩ 1/4W J	
R7200	NRSA63J-273X	MG RESISTOR	27kΩ 1/16W J	
R7251	QRE141J-222Y	C RESISTOR	2.2kΩ 1/4W J	
R7252	QRE141J-222Y	C RESISTOR	2.2kΩ 1/4W J	
R7253	QRE141J-222Y	C RESISTOR	2.2kΩ 1/4W J	
R7254	QRE141J-272Y	C RESISTOR	2.7kΩ 1/4W J	
R7255	QRE141J-272Y	C RESISTOR	2.7kΩ 1/4W J	
R7256	QRE141J-272Y	C RESISTOR	2.7kΩ 1/4W J	
R7257	QRE141J-222Y	C RESISTOR	2.2kΩ 1/4W J	
R7702	NRSA63J-222X	MG RESISTOR	2.2kΩ 1/16W J	
R7703	NRSA63J-102X	MG RESISTOR	1kΩ 1/16W J	
R7704	NRSA63J-102X	MG RESISTOR	1kΩ 1/16W J	
R7705	NRSA63J-102X	MG RESISTOR	1kΩ 1/16W J	
R7706	NRSA63J-102X	MG RESISTOR	1kΩ 1/16W J	
R7707	NRSA63J-222X	MG RESISTOR	2.2kΩ 1/16W J	
R7708	NRSA63J-222X	MG RESISTOR	2.2kΩ 1/16W J	
R7709	NRSA63J-103X	MG RESISTOR	10kΩ 1/16W J	
R7715	NRSA63J-103X	MG RESISTOR	10kΩ 1/16W J	
R7717	NRSA63J-103X	MG RESISTOR	10kΩ 1/16W J	
R7718	QRE141J-102Y	C RESISTOR	1kΩ 1/4W J	

⚠ Symbol No.	Part No.	Part Name	Description	Local
R7719	QRE141J-102Y	C RESISTOR	1kΩ 1/4W J	
R7720	QRE141J-102Y	C RESISTOR	1kΩ 1/4W J	
R7721	NRSA63J-122X	MG RESISTOR	1.2kΩ 1/16W J	
R7722	NRSA63J-122X	MG RESISTOR	1.2kΩ 1/16W J	
R7723	NRSA63J-122X	MG RESISTOR	1.2kΩ 1/16W J	
R7724	NRSA63J-122X	MG RESISTOR	1.2kΩ 1/16W J	
R7725	NRSA63J-122X	MG RESISTOR	1.2kΩ 1/16W J	
R7726	NRSA63J-101X	MG RESISTOR	100Ω 1/16W J	
R7728	NRSA63J-222X	MG RESISTOR	2.2kΩ 1/16W J	
R7731	NRSA63J-222X	MG RESISTOR	2.2kΩ 1/16W J	
R7732	NRSA63J-103X	MG RESISTOR	10kΩ 1/16W J	
R7735	NRSA63J-102X	MG RESISTOR	1kΩ 1/16W J	
R7737	NRSA63J-102X	MG RESISTOR	1kΩ 1/16W J	
R7738	NRSA63J-102X	MG RESISTOR	1kΩ 1/16W J	
R7739	NRSA63J-102X	MG RESISTOR	1kΩ 1/16W J	
R7740	NRSA63J-102X	MG RESISTOR	1kΩ 1/16W J	
R7742	NRSA63J-102X	MG RESISTOR	1kΩ 1/16W J	
R7743	NRSA63J-102X	MG RESISTOR	1kΩ 1/16W J	
R7744	NRSA63J-102X	MG RESISTOR	1kΩ 1/16W J	
R7745	NRSA63J-103X	MG RESISTOR	10kΩ 1/16W J	
R7746	NRSA63J-102X	MG RESISTOR	1kΩ 1/16W J	
R7747	NRSA63J-0R0X	MG RESISTOR	0Ω 1/16W J	
R7748	NRSA63J-102X	MG RESISTOR	1kΩ 1/16W J	
R7749	NRSA63J-102X	MG RESISTOR	1kΩ 1/16W J	
R7751	QRE141J-222Y	C RESISTOR	2.2kΩ 1/4W J	
R7752	QRE141J-222Y	C RESISTOR	2.2kΩ 1/4W J	
R7756	NRSA63J-102X	MG RESISTOR	1kΩ 1/16W J	
R7759	NRSA63J-222X	MG RESISTOR	2.2kΩ 1/16W J	
R7760	NRSA63J-222X	MG RESISTOR	2.2kΩ 1/16W J	
R7761	NRSA63J-222X	MG RESISTOR	2.2kΩ 1/16W J	
R7762	NRSA63J-222X	MG RESISTOR	2.2kΩ 1/16W J	
R7763	NRSA63J-102X	MG RESISTOR	1kΩ 1/16W J	
R7764	NRSA63J-102X	MG RESISTOR	1kΩ 1/16W J	
R7765	NRSA63J-0R0X	MG RESISTOR	0Ω 1/16W J	
R7766	NRSA63J-0R0X	MG RESISTOR	0Ω 1/16W J	
R7767	NRSA63J-222X	MG RESISTOR	2.2kΩ 1/16W J	
R7768	NRSA63J-222X	MG RESISTOR	2.2kΩ 1/16W J	
R7769	NRSA63J-102X	MG RESISTOR	1kΩ 1/16W J	
R7770	NRSA63J-102X	MG RESISTOR	1kΩ 1/16W J	
R7771	QRE141J-104Y	C RESISTOR	100kΩ 1/4W J	
R7772	QRE141J-222Y	C RESISTOR	2.2kΩ 1/4W J	
R7773	QRE141J-222Y	C RESISTOR	2.2kΩ 1/4W J	
R7774	QRE141J-102Y	C RESISTOR	1kΩ 1/4W J	
R7775	NRSA63J-222X	MG RESISTOR	2.2kΩ 1/16W J	
R7776	NRSA63J-222X	MG RESISTOR	2.2kΩ 1/16W J	
R7777	NRSA63J-102X	MG RESISTOR	1kΩ 1/16W J	
R7778	NRSA63J-222X	MG RESISTOR	2.2kΩ 1/16W J	
R7779	NRSA63J-222X	MG RESISTOR	2.2kΩ 1/16W J	
R7780	NRSA63J-222X	MG RESISTOR	2.2kΩ 1/16W J	
R7781	NRSA63J-222X	MG RESISTOR	2.2kΩ 1/16W J	
R7786	NRSA63J-222X	MG RESISTOR	2.2kΩ 1/16W J	
R7788	NRSA63J-222X	MG RESISTOR	2.2kΩ 1/16W J	
R7789	NRSA63J-222X	MG RESISTOR	2.2kΩ 1/16W J	
R7790	NRSA63J-102X	MG RESISTOR	1kΩ 1/16W J	
R7791	NRSA63J-102X	MG RESISTOR	1kΩ 1/16W J	
R7792	NRSA63J-102X	MG RESISTOR	1kΩ 1/16W J	
R7794	NRSA63J-222X	MG RESISTOR	2.2kΩ 1/16W J	
R7796	NRSA63J-222X	MG RESISTOR	2.2kΩ 1/16W J	
R7797	NRSA63J-102X	MG RESISTOR	1kΩ 1/16W J	
R7798	NRSA63J-102X	MG RESISTOR	1kΩ 1/16W J	
R7803	NRSA63J-103X	MG RESISTOR	10kΩ 1/16W J	
R7804	NRSA63J-103X	MG RESISTOR	10kΩ 1/16W J	
R7805	NRSA63J-103X	MG RESISTOR	10kΩ 1/16W J	
R7806	NRSA63J-103X	MG RESISTOR	10kΩ 1/16W J	
R7807	NRSA63J-103X	MG RESISTOR	10kΩ 1/16W J	
R7808	NRSA63J-103X	MG RESISTOR	10kΩ 1/16W J	
R7809	NRSA63J-273X	MG RESISTOR	27kΩ 1/16W J	UW
R7809	NRSA63J-153X	MG RESISTOR	15kΩ 1/16W J	UG,UX
R7821	NRSA63J-222X	MG RESISTOR	2.2kΩ 1/16W J	
R7823	NRSA63J-222X	MG RESISTOR	2.2kΩ 1/16W J	
R7824	NRSA63J-222X	MG RESISTOR	2.2kΩ 1/16W J	
R7825	NRSA63J-222X	MG RESISTOR	2.2kΩ 1/16W J	
R7852	NRSA63J-104X	MG RESISTOR	100kΩ 1/16W J	
R7867	NRSA63J-103X	MG RESISTOR	10kΩ 1/16W J	
R7871	NRSA63J-104X	MG RESISTOR	100kΩ 1/16W J	
R7875	NRSA63J-104X	MG RESISTOR	100kΩ 1/16W J	
R7876	NRSA63J-103X	MG RESISTOR	10kΩ 1/16W J	
R7878	NRSA63J-104X	MG RESISTOR	100kΩ 1/16W J	

⚠ Symbol No.	Part No.	Part Name	Descrip ion	Local
R7879	NRSA63J-103X	MG RESISTOR	10kΩ 1/16W J	
R7881	QRE141J-103Y	C RESISTOR	10kΩ 1/4W J	
R7886	NRSA63J-103X	MG RESISTOR	10kΩ 1/16W J	
R7892	NRSA63J-103X	MG RESISTOR	10kΩ 1/16W J	
R7897	NRSA63J-103X	MG RESISTOR	10kΩ 1/16W J	
R7899	NRSA63J-103X	MG RESISTOR	10kΩ 1/16W J	
R8000	NRSA63J-473X	MG RESISTOR	47kΩ 1/16W J	
R8001	NRSA63J-473X	MG RESISTOR	47kΩ 1/16W J	
R8002	NRSA63J-223X	MG RESISTOR	22kΩ 1/16W J	
R8003	NRSA63J-223X	MG RESISTOR	22kΩ 1/16W J	
R8004	NRSA63J-222X	MG RESISTOR	2.2kΩ 1/16W J	
R8005	NRSA63J-103X	MG RESISTOR	10kΩ 1/16W J	
R8006	NRSA63J-103X	MG RESISTOR	10kΩ 1/16W J	
R8007	NRSA63J-223X	MG RESISTOR	22kΩ 1/16W J	
R8020	NRSA63J-392X	MG RESISTOR	3.9kΩ 1/16W J	
R8021	NRSA63J-104X	MG RESISTOR	100kΩ 1/16W J	
R8030	NRSA63J-472X	MG RESISTOR	4.7kΩ 1/16W J	
R8031	NRSA63J-332X	MG RESISTOR	3.3kΩ 1/16W J	
R8032	NRSA63J-123X	MG RESISTOR	12kΩ 1/16W J	
R8033	NRSA63J-154X	MG RESISTOR	150kΩ 1/16W J	
R8034	NRSA63J-473X	MG RESISTOR	47kΩ 1/16W J	
R8035	NRSA63J-101X	MG RESISTOR	100Ω 1/16W J	
R8036	NRSA63J-101X	MG RESISTOR	100Ω 1/16W J	
R8042	NRSA63J-821X	MG RESISTOR	820Ω 1/16W J	
R8043	NRSA63J-103X	MG RESISTOR	10kΩ 1/16W J	
R8046	NRSA63J-474X	MG RESISTOR	470kΩ 1/16W J	
R8060	QRE141J-472Y	C RESISTOR	4.7kΩ 1/4W J	
R8061	NRSA63J-103X	MG RESISTOR	10kΩ 1/16W J	
R8062	NRSA63J-103X	MG RESISTOR	10kΩ 1/16W J	
R8070	NRSA63J-102X	MG RESISTOR	1kΩ 1/16W J	
R8071	NRSA63J-103X	MG RESISTOR	10kΩ 1/16W J	
R8072	NRSA63J-103X	MG RESISTOR	10kΩ 1/16W J	
R8073	NRSA63J-103X	MG RESISTOR	10kΩ 1/16W J	
R8074	NRSA63J-102X	MG RESISTOR	1kΩ 1/16W J	
R8075	NRSA63J-103X	MG RESISTOR	10kΩ 1/16W J	
R8080	NRSA63J-102X	MG RESISTOR	1kΩ 1/16W J	
R8081	NRSA63J-103X	MG RESISTOR	10kΩ 1/16W J	
R8082	NRSA63J-103X	MG RESISTOR	10kΩ 1/16W J	
R8083	NRSA63J-103X	MG RESISTOR	10kΩ 1/16W J	
R8084	NRSA63J-102X	MG RESISTOR	1kΩ 1/16W J	
R8085	NRSA63J-103X	MG RESISTOR	10kΩ 1/16W J	
R8090	QRE141J-153Y	C RESISTOR	15kΩ 1/4W J	
R8091	QRE141J-154Y	C RESISTOR	150kΩ 1/4W J	
R8092	NRSA63J-133X	MG RESISTOR	13kΩ 1/16W J	
R8093	NRSA63J-101X	MG RESISTOR	100Ω 1/16W J	
R8094	NRSA63J-303X	MG RESISTOR	30kΩ 1/16W J	
R8095	NRSA63J-0R0X	MG RESISTOR	0Ω 1/16W J	
R8100	NRSA63J-473X	MG RESISTOR	47kΩ 1/16W J	
R8101	NRSA63J-473X	MG RESISTOR	47kΩ 1/16W J	
R8102	NRSA63J-223X	MG RESISTOR	22kΩ 1/16W J	
R8103	NRSA63J-223X	MG RESISTOR	22kΩ 1/16W J	
R8104	NRSA63J-222X	MG RESISTOR	2.2kΩ 1/16W J	
R8105	NRSA63J-103X	MG RESISTOR	10kΩ 1/16W J	
R8106	NRSA63J-103X	MG RESISTOR	10kΩ 1/16W J	
R8107	NRSA63J-223X	MG RESISTOR	22kΩ 1/16W J	
R8120	NRSA63J-392X	MG RESISTOR	3.9kΩ 1/16W J	
R8121	NRSA63J-104X	MG RESISTOR	100kΩ 1/16W J	
R8130	NRSA63J-472X	MG RESISTOR	4.7kΩ 1/16W J	
R8131	NRSA63J-332X	MG RESISTOR	3.3kΩ 1/16W J	
R8132	NRSA63J-123X	MG RESISTOR	12kΩ 1/16W J	
R8133	NRSA63J-154X	MG RESISTOR	150kΩ 1/16W J	
R8134	NRSA63J-473X	MG RESISTOR	47kΩ 1/16W J	
R8135	NRSA63J-101X	MG RESISTOR	100Ω 1/16W J	
R8136	NRSA63J-101X	MG RESISTOR	100Ω 1/16W J	
R8142	NRSA63J-821X	MG RESISTOR	820Ω 1/16W J	
R8143	NRSA63J-103X	MG RESISTOR	10kΩ 1/16W J	
R8146	NRSA63J-474X	MG RESISTOR	470kΩ 1/16W J	
R8160	QRE141J-472Y	C RESISTOR	4.7kΩ 1/4W J	
R8161	NRSA63J-103X	MG RESISTOR	10kΩ 1/16W J	
R8162	NRSA63J-103X	MG RESISTOR	10kΩ 1/16W J	
R8170	NRSA63J-102X	MG RESISTOR	1kΩ 1/16W J	
R8171	NRSA63J-103X	MG RESISTOR	10kΩ 1/16W J	
R8172	NRSA63J-103X	MG RESISTOR	10kΩ 1/16W J	
R8173	NRSA63J-103X	MG RESISTOR	10kΩ 1/16W J	
R8174	NRSA63J-102X	MG RESISTOR	1kΩ 1/16W J	
R8175	NRSA63J-103X	MG RESISTOR	10kΩ 1/16W J	
R8180	NRSA63J-223X	MG RESISTOR	22kΩ 1/16W J	
R8182	NRSA63J-163X	MG RESISTOR	16kΩ 1/16W J	

⚠ Symbol No.	Part No.	Part Name	Descrip ion	Local
R8183	NRSA63J-223X	MG RESISTOR	22kΩ 1/16W J	
R8184	NRSA63J-0R0X	MG RESISTOR	0Ω 1/16W J	
R8186	NRSA63J-103X	MG RESISTOR	10kΩ 1/16W J	
R8187	NRSA63J-102X	MG RESISTOR	1kΩ 1/16W J	
R8189	NRSA63J-104X	MG RESISTOR	100kΩ 1/16W J	
R8190	QRE141J-153Y	C RESISTOR	15kΩ 1/4W J	
R8191	QRE141J-154Y	C RESISTOR	150kΩ 1/4W J	
R8192	NRSA63J-133X	MG RESISTOR	13kΩ 1/16W J	
R8193	NRSA63J-101X	MG RESISTOR	100Ω 1/16W J	
R8194	NRSA63J-303X	MG RESISTOR	30kΩ 1/16W J	
R8195	NRSA63J-0R0X	MG RESISTOR	0Ω 1/16W J	
R8202	NRSA63J-103X	MG RESISTOR	10kΩ 1/16W J	
R8203	NRSA63J-223X	MG RESISTOR	22kΩ 1/16W J	
R8204	NRSA63J-223X	MG RESISTOR	22kΩ 1/16W J	
R8205	NRSA63J-243X	MG RESISTOR	24kΩ 1/16W J	
R8206	NRSA63J-103X	MG RESISTOR	10kΩ 1/16W J	
R8211	NRSA63J-223X	MG RESISTOR	22kΩ 1/16W J	
R8212	NRSA63J-103X	MG RESISTOR	10kΩ 1/16W J	
R8223	NRSA63J-0R0X	MG RESISTOR	0Ω 1/16W J	
R8224	NRSA63J-0R0X	MG RESISTOR	0Ω 1/16W J	
R8225	NRSA63J-0R0X	MG RESISTOR	0Ω 1/16W J	
R8230	NRSA63J-752X	MG RESISTOR	7 5kΩ 1/16W J	
R8231	NRSA63J-103X	MG RESISTOR	10kΩ 1/16W J	
R8232	QRE141J-103Y	C RESISTOR	10kΩ 1/4W J	
R8235	NRSA63J-224X	MG RESISTOR	220kΩ 1/16W J	
R8260	NRSA63J-474X	MG RESISTOR	470kΩ 1/16W J	
R8261	NRSA63J-474X	MG RESISTOR	470kΩ 1/16W J	
R8262	NRSA63J-101X	MG RESISTOR	100Ω 1/16W J	
R8263	NRSA63J-475X	MG RESISTOR	4.7MΩ 1/16W J	
R8264	NRSA63J-153X	MG RESISTOR	15kΩ 1/16W J	
R8265	NRSA63J-562X	MG RESISTOR	5.6kΩ 1/16W J	
R8266	NRSA63J-472X	MG RESISTOR	4.7kΩ 1/16W J	
R8267	NRSA63J-104X	MG RESISTOR	100kΩ 1/16W J	
R8268	NRSA63J-622X	MG RESISTOR	6 2kΩ 1/16W J	
R8269	QRE141J-222Y	C RESISTOR	2 2kΩ 1/4W J	
R8293	QRE141J-393Y	C RESISTOR	39kΩ 1/4W J	
R8335	NRSA63J-224X	MG RESISTOR	220kΩ 1/16W J	
R8507	NRSA63J-104X	MG RESISTOR	100kΩ 1/16W J	
R8508	NRSA63J-243X	MG RESISTOR	24kΩ 1/16W J	
R8509	NRSA63J-243X	MG RESISTOR	24kΩ 1/16W J	
R8510	NRSA63J-243X	MG RESISTOR	24kΩ 1/16W J	
R8511	NRSA63J-243X	MG RESISTOR	24kΩ 1/16W J	
R8512	NRSA63J-243X	MG RESISTOR	24kΩ 1/16W J	
R8513	NRSA63J-243X	MG RESISTOR	24kΩ 1/16W J	
R8514	NRSA63J-243X	MG RESISTOR	24kΩ 1/16W J	
R8521	NRSA63J-243X	MG RESISTOR	24kΩ 1/16W J	
R8523	QRZ9006-4R7X	F.RESISTOR	4.7Ω 1/4W J	
R8524	QRE141J-561Y	C RESISTOR	560Ω 1/4W J	
R8529	NRSA63J-113X	MG RESISTOR	11kΩ 1/16W J	
R8539	QRE141J-822Y	C RESISTOR	8 2kΩ 1/4W J	
R8551	NRSA63J-223X	MG RESISTOR	22kΩ 1/16W J	
R8574	NRSA63J-223X	MG RESISTOR	22kΩ 1/16W J	
R8575	NRSA63J-223X	MG RESISTOR	22kΩ 1/16W J	
R8578	NRSA63J-681X	MG RESISTOR	680Ω 1/16W J	
R8579	NRSA63J-103X	MG RESISTOR	10kΩ 1/16W J	
R8888	NRSA63J-0R0X	MG RESISTOR	0Ω 1/16W J	
R8900	QRE141J-102Y	C RESISTOR	1kΩ 1/4W J	
R9000	NRSA63J-103X	MG RESISTOR	10kΩ 1/16W J	
R9001	NRSA63J-104X	MG RESISTOR	100kΩ 1/16W J	
R9002	NRSA63J-102X	MG RESISTOR	1kΩ 1/16W J	
R9003	NRSA63J-124X	MG RESISTOR	120kΩ 1/16W J	
R9004	NRSA63J-222X	MG RESISTOR	2 2kΩ 1/16W J	
R9005	NRSA63J-102X	MG RESISTOR	1kΩ 1/16W J	
R9006	NRSA63J-103X	MG RESISTOR	10kΩ 1/16W J	
R9007	NRSA63J-104X	MG RESISTOR	100kΩ 1/16W J	
R9008	NRSA63J-102X	MG RESISTOR	1kΩ 1/16W J	
R9009	NRSA63J-473X	MG RESISTOR	47kΩ 1/16W J	
R9010	NRSA63J-473X	MG RESISTOR	47kΩ 1/16W J	
R9011	NRSA63J-473X	MG RESISTOR	47kΩ 1/16W J	
R9012	NRSA63J-473X	MG RESISTOR	47kΩ 1/16W J	
R9013	NRSA63J-103X	MG RESISTOR	10kΩ 1/16W J	
R9014	NRSA63J-103X	MG RESISTOR	10kΩ 1/16W J	
R9015	QRE141J-221Y	C RESISTOR	220Ω 1/4W J	
R9017	NRSA63J-104X	MG RESISTOR	100kΩ 1/16W J	
R9021	NRSA63J-472X	MG RESISTOR	4.7kΩ 1/16W J	
R9022	NRSA63J-472X	MG RESISTOR	4.7kΩ 1/16W J	
R9101	NRSA63J-472X	MG RESISTOR	4.7kΩ 1/16W J	
R9102	NRSA63J-472X	MG RESISTOR	4.7kΩ 1/16W J	

⚠ Symbol No.	Part No.	Part Name	Description	Local
R9103	NRSA63J-472X	MG RESISTOR	4.7kΩ 1/16W J	
R9104	NRSA63J-472X	MG RESISTOR	4.7kΩ 1/16W J	
VR901	QVQ0306-B24	V RESISTOR		
L9100	QQL231K-2R2Y	COIL	2.2uH K	
L9101	QQL231K-470Y	COIL	47uH K	
L9102	QQL231K-470Y	COIL	47uH K	
CN720	QGF1036C1-19	CONNECTOR	FFC/FPC (1-19)	
CN730	QGF1205C1-25	CONNECTOR	FFC/FPC (1-25)	
CN740	QGF1205F1-05	CONNECTOR	FFC/FPC (1-5)	
CN750	QGF1205F1-11	CONNECTOR	FFC/FPC (1-11)	
CN760	QGF1205C1-08	CONNECTOR	FFC/FPC (1-8)	
CN788	QGF1205C1-05	CONNECTOR	FFC/FPC (1-5)	
CN800	QGF1036C1-10	CONNECTOR	FFC/FPC (1-10)	
CN810	QGF1036C1-08	CONNECTOR	FFC/FPC (1-8)	
CN820	QGF1205C1-08	CONNECTOR	FFC/FPC (1-8)	
CN830	QGF1205C1-19	CONNECTOR	FFC/FPC (1-19)	
CN850	QGB2510J1-15	CONNECTOR	B-B (1-15)	
CN860	QGB2510K2-06	CONNECTOR	B-B (1-6)	
CN901	QGF1205F1-05	CONNECTOR	FFC/FPC (1-5)	
FW910	QUM153-21DGZ4-E	FLAT WIRE		
J700	QNB0261-003	SPK TERMINAL		
J800	QNN0732-001	AUX JACK		
J901	QNS0252-001	MIC JACK		
J902	QNS0252-001	MIC JACK		
J910	QNS0170-001	HEADPHONE JACK		
K8000	NRSA63J-0R0X	MG RESISTOR	0Ω 1/16W J	
K8001	NRSA63J-0R0X	MG RESISTOR	0Ω 1/16W J	
K9100	QQR0621-001Z	FERRATE BEADS		
RY712	QSK0109-001	RELAY		
RY734	QSK0109-001	RELAY		
RY750	QSK0109-001	RELAY		
RY767	QSK0109-001	RELAY		
X7700	QAX0711-002Z	CRYSTAL	8.000000MHz	

Primary board (DX-T9)

Block No. [0][3]

⚠ Symbol No.	Part No.	Part Name	Description	Local
IC920	BH7868FS-X	IC		
IC930	GP1FAV30TK0F	OPTICAL JACK		
Q1000	KTC2026/Y/	TRANSISTOR		
Q1001	KTC3203/OY/-T	TRANSISTOR		
Q2007	KTA1046/Y/	TRANSISTOR		
Q2008	KTC3199/GL/-T	TRANSISTOR		
Q2009	KTC3199/GL/-T	TRANSISTOR		
Q9300	KRA110M-T	TRANSISTOR		
Q9301	KRC110M-T	TRANSISTOR		
Q9303	KTC3199/GL/-T	TRANSISTOR		
⚠ D1000	1N5402M-20	DIODE		
⚠ D1001	1N5402M-20	DIODE		
⚠ D1002	1N5402M-20	DIODE		
⚠ D1003	1N5402M-20	DIODE		
⚠ D1004	6A10E2	SI DIODE		
⚠ D1005	6A10E2	SI DIODE		
⚠ D1006	6A10E2	SI DIODE		
⚠ D1007	6A10E2	SI DIODE		
⚠ D1008	6A10E2	SI DIODE		
⚠ D1009	6A10E2	SI DIODE		
⚠ D1010	6A10E2	SI DIODE		
⚠ D1011	6A10E2	SI DIODE		
D1012	MTZJ6.2B-T2	Z DIODE		
D1013	MTZJ18B-T2	Z DIODE		
D1014	MTZJ18B-T2	Z DIODE		
D1015	1N4003S-T5	SI DIODE		
D1016	1N4003S-T5	SI DIODE		
D1017	1N4003S-T5	SI DIODE		
⚠ D2001	6A10E2	SI DIODE		
⚠ D2002	6A10E2	SI DIODE		
⚠ D2003	6A10E2	SI DIODE		

⚠ Symbol No.	Part No.	Part Name	Description	Local
⚠ D2004	6A10E2	SI DIODE		
D2008	2A02-M	DIODE		
D2009	MTZJ5.1C-T2	Z DIODE		
D2013	1SS133-T2	SI DIODE		
D9300	2A02-M	DIODE		
D9301	MTZJ3.3B-T2	Z DIODE		
D9302	MTZJ2.0A-T2	Z DIODE		
D9303	MTZJ3.9B-T2	Z DIODE		
D9310	MTZJ3.0B-T2	Z DIODE		
D9311	1N4003S-T5	SI DIODE		
D9312	1N4003S-T5	SI DIODE		
D9313	1N4003S-T5	SI DIODE		
C1002	QETN1HM-226Z	E CAPACITOR	22uF 50V M	
C1003	QETN1HM-226Z	E CAPACITOR	22uF 50V M	
C1004	QDYB1CM-103Y	C CAPACITOR	0.01uF 16V M	
C1005	QETN1HM-106Z	E CAPACITOR	10uF 50V M	
C1010	QFLC1HJ-104Z	M CAPACITOR	0.1uF 50V J	
C1011	QFLC1HJ-104Z	M CAPACITOR	0.1uF 50V J	
C1012	QFLC1HJ-104Z	M CAPACITOR	0.1uF 50V J	
C1013	QFKC2EK-104Z	MM CAPACITOR	0.1uF 250V K	
C1014	QFKC2EK-104Z	MM CAPACITOR	0.1uF 250V K	
C1015	QFKC2EK-103Z	MM CAPACITOR	0.01uF 250V K	
C1016	QETN2AM-476Z	E CAPACITOR	47uF 100V M	
C1017	QETN1HM-107Z	E CAPACITOR	100uF 50V M	
C2000	QEZ0706-568	E CAPACITOR	5600uF	
C2004	QEZ0706-568	E CAPACITOR	5600uF	
C2005	QFLC2AJ-103Z	M CAPACITOR	0.01uF 100V J	
C2006	QETM1HM-478	E CAPACITOR	4700uF 50V M	
C2007	QFLC2AJ-103Z	M CAPACITOR	0.01uF 100V J	
C2008	QETM1HM-478	E CAPACITOR	4700uF 50V M	
C2009	QFKC2EK-104Z	MM CAPACITOR	0.1uF 250V K	
C2010	QCBB1HK-103Y	C CAPACITOR	0.01uF 50V K	
C2011	QCBB1HK-221Y	C CAPACITOR	220pF 50V K	
C2012	QETM1CM-478	E CAPACITOR	4700uF 16V M	
C2013	QETM1EM-688	E CAPACITOR	6800uF 25V M	
C9200	QETN1AM-477Z	E CAPACITOR	470uF 10V M	
C9201	QCBB1HK-104Y	C CAPACITOR	0.1uF 50V K	
C9204	QETN1HM-105Z	E CAPACITOR	1uF 50V M	
C9206	QETN1HM-105Z	E CAPACITOR	1uF 50V M	
C9209	QETN1CM-226Z	E CAPACITOR	22uF 16V M	
C9211	QETN1HM-105Z	E CAPACITOR	1uF 50V M	
C9213	QETN1HM-105Z	E CAPACITOR	1uF 50V M	
C9215	QETN1HM-105Z	E CAPACITOR	1uF 50V M	
C9216	QCBB1HK-104Y	C CAPACITOR	0.1uF 50V K	
C9218	QETN0JM-477Z	E CAPACITOR	470uF 6.3V M	
C9221	QETN0JM-477Z	E CAPACITOR	470uF 6.3V M	
C9224	QETN0JM-477Z	E CAPACITOR	470uF 6.3V M	
C9227	QETN0JM-477Z	E CAPACITOR	470uF 6.3V M	
C9230	QETN0JM-477Z	E CAPACITOR	470uF 6.3V M	
C9232	QETN0JM-477Z	E CAPACITOR	470uF 6.3V M	
C9300	QETN0JM-107Z	E CAPACITOR	100uF 6.3V M	
C9303	QETN1CM-107Z	E CAPACITOR	100uF 16V M	
⚠ R1000	QRK126J-470X	UNF C RESISTOR	47Ω 1/2W J	
R1001	QRE141J-753Y	C RESISTOR	75kΩ 1/4W J	
R1002	QRE141J-104Y	C RESISTOR	100kΩ 1/4W J	
R1003	QRE141J-104Y	C RESISTOR	100kΩ 1/4W J	
R1005	QRE141J-753Y	C RESISTOR	75kΩ 1/4W J	
R2000	QRE141J-104Y	C RESISTOR	100kΩ 1/4W J	
R2001	QRE141J-104Y	C RESISTOR	100kΩ 1/4W J	
R2002	QRE141J-104Y	C RESISTOR	100kΩ 1/4W J	
R2003	QRE141J-104Y	C RESISTOR	100kΩ 1/4W J	
R2004	QRE141J-681Y	C RESISTOR	680Ω 1/4W J	
R2005	QRE141J-272Y	C RESISTOR	2.7kΩ 1/4W J	
R2006	QRE141J-681Y	C RESISTOR	680Ω 1/4W J	
R2007	QRE141J-472Y	C RESISTOR	4.7kΩ 1/4W J	
R2008	QRE141J-102Y	C RESISTOR	1kΩ 1/4W J	
R2009	QRE141J-102Y	C RESISTOR	1kΩ 1/4W J	
R2010	QRE141J-102Y	C RESISTOR	1kΩ 1/4W J	
R2011	QRL01DJ-471X	OMF RESISTOR	470Ω 1W J	
R2012	QRL01DJ-471X	OMF RESISTOR	470Ω 1W J	
R2014	QRE141J-273Y	C RESISTOR	27kΩ 1/4W J	
R9201	QRE141J-391Y	C RESISTOR	390Ω 1/4W J	
R9202	QRE141J-391Y	C RESISTOR	390Ω 1/4W J	
R9203	QRE141J-361Y	C RESISTOR	360Ω 1/4W J	
R9204	QRE141J-131Y	C RESISTOR	130Ω 1/4W J	
R9205	QRE141J-361Y	C RESISTOR	360Ω 1/4W J	

⚠ Symbol No.	Part No.	Part Name	Descrip ion	Local
R9206	QRE141J-131Y	C RESISTOR	130Ω 1/4W J	
R9207	QRE141J-391Y	C RESISTOR	390Ω 1/4W J	
R9208	QRE141J-391Y	C RESISTOR	390Ω 1/4W J	
R9209	QRE141J-391Y	C RESISTOR	390Ω 1/4W J	
R9210	QRE141J-391Y	C RESISTOR	390Ω 1/4W J	
R9218	QRE141J-750Y	C RESISTOR	75Ω 1/4W J	
R9221	QRE141J-750Y	C RESISTOR	75Ω 1/4W J	
R9224	QRE141J-750Y	C RESISTOR	75Ω 1/4W J	
R9227	QRE141J-750Y	C RESISTOR	75Ω 1/4W J	
R9230	QRE141J-750Y	C RESISTOR	75Ω 1/4W J	
R9232	QRE141J-750Y	C RESISTOR	75Ω 1/4W J	
R9300	QRT017J-2R2	MF RESISTOR	2.2Ω 1W J	
R9301	QRE141J-681Y	C RESISTOR	680Ω 1/4W J	
R9302	QRZ9006-4R7X	F.RESISTOR	4.7Ω 1/4W J	
R9303	QRE141J-271Y	C RESISTOR	270Ω 1/4W J	
R9310	QRE141J-470Y	C RESISTOR	47Ω 1/4W J	
CN100	QGA7901C1-02	CONNECTOR	W-B (1-2)	
CN101	QGA7901C1-04	CONNECTOR	W-B (1-4)	
CN102	QGA7901C1-03	CONNECTOR	W-B (1-3)	
CN103	QGA3901F1-08	CONNECTOR	W-B (1-8)	
CN104	QGB2510J1-13	CONNECTOR	B-B (1-13)	
CN105	QGD2503F1-03	CONNECTOR	(1-3)	
CN106	QGA3901F1-03	CONNECTOR	W-B (1-3)	
CN200	QGB2510J1-16	CONNECTOR	B-B (1-16)	
CN201	QGB2510J1-20	CONNECTOR	B-B (1-20)	
CN202	QGD2504C1-03Z	CONNECTOR	(1-3)	
CN203	QGB2510K2-15	CONNECTOR	B-B (1-15)	
CN204	QGB2510K2-13	CONNECTOR	B-B (1-13)	
CN920	QGF1205C1-08	CONNECTOR	FFC/FPC (1-8)	
CN930	QGF1036C1-28	CONNECTOR	FFC/FPC (1-28)	
CN931	QGF1205C1-11	CONNECTOR	FFC/FPC (1-11)	
EP201	E409182-001SM	GRAND TERMINAL		
H2001	GV40577-001A	HEAT SINK		
H920	GV40397-003A	IC HOLDER		
J920	QNN0624-001	PIN JACK		
J921	QNN0557-002	PIN JACK		
PP201	QZW0038-001	WIRE CLAMP		
PP202	QZW0038-001	WIRE CLAMP		
⚠ S1000	QSW0812-001	VOLTAGE SWITCH		
Z1001	QNG0003-001Z	FUSE CL P		
Z1002	QNG0003-001Z	FUSE CL P		
Z1003	QNG0003-001Z	FUSE CL P		
Z1004	QNG0003-001Z	FUSE CL P		
Z1005	QNG0003-001Z	FUSE CL P		
Z1006	QNG0003-001Z	FUSE CL P		
Z1007	QNG0003-001Z	FUSE CL P		
Z1008	QNG0003-001Z	FUSE CL P		
Z1009	QNG0003-001Z	FUSE CL P		
Z1010	QNG0003-001Z	FUSE CL P		
Z1011	QNG0003-001Z	FUSE CL P		
Z1012	QNG0003-001Z	FUSE CL P		
Z1013	QNG0003-001Z	FUSE CL P		
Z1014	QNG0003-001Z	FUSE CL P		
Z1015	QNG0003-001Z	FUSE CL P		
Z1016	QNG0003-001Z	FUSE CL P		
Z1017	QNG0003-001Z	FUSE CL P		
Z1018	QNG0003-001Z	FUSE CL P		
Z1019	QNG0003-001Z	FUSE CL P		
Z1020	QNG0003-001Z	FUSE CL P		

Amplifier board (DX-T7)

Block No. [0][4]

⚠ Symbol No.	Part No.	Part Name	Descrip ion	Local
IC500	PT6305	FL DRIVER		
IC510	GP1UM281XKVF	IR DETECT UNIT		
⚠ IC601	STK402-240	IC		
⚠ IC602	KIA7809API	IC		
⚠ IC603	KIA7805API	IC		
⚠ IC604	KIA7809API	IC		
⚠ IC605	KIA278R05PI	TRANSISTOR		
⚠ IC606	KIA278R09PI	TRANSISTOR		
⚠ IC607	KIA317PI	IC		
⚠ IC608	KIA7805API	IC		
⚠ IC650	STK413-430	IC		
Q5004	KRC102M-T	DIGI TRANSISTOR		
Q5005	KRC102M-T	DIGI TRANSISTOR		
Q5006	KRC102M-T	DIGI TRANSISTOR		
Q5007	KRC102M-T	DIGI TRANSISTOR		
Q5008	KTA1023/OY/-T	TRANSISTOR		
Q5009	KRC102M-T	DIGI TRANSISTOR		
Q5010	KRC110M-T	TRANSISTOR		
Q5011	KTC3199/GL/-T	TRANSISTOR		
Q6001	KRC102M-T	DIGI TRANSISTOR		
Q6002	KTA1267/YG/-T	TRANSISTOR		
Q6211	KTC3199/GL/-T	TRANSISTOR		
Q6221	KTC3199/GL/-T	TRANSISTOR		
Q6231	KTC3199/GL/-T	TRANSISTOR		
Q6351	KTC3203/OY/-T	TRANSISTOR		
Q6352	KRC102M-T	DIGI TRANSISTOR		
Q6511	KTC3199/GL/-T	TRANSISTOR		
Q6521	KTC3199/GL/-T	TRANSISTOR		
Q6531	KTC3199/GL/-T	TRANSISTOR		
Q6601	KTC3200/GL/-T	TRANSISTOR		
Q6602	KTA1023/OY/-T	TRANSISTOR		
Q6603	KTA1268/GL/-T	TRANSISTOR		
Q6604	KTC1027/OY/-T	TRANSISTOR		
Q6701	KTC1027/OY/-T	TRANSISTOR		
Q6702	KTA1023/OY/-T	TRANSISTOR		
Q6703	KTC3199/GL/-T	TRANSISTOR		
Q6704	KTA1023/OY/-T	TRANSISTOR		
D5004	SLI-343URC-W-T	LED		
D5005	SLI-343URC-W-T	LED		
D5006	SELU2E10C-P	LED		
D5007	SLR-343VC-T	LED		
D6001	MTZJ9.1B-T2	Z DIODE		
D6002	MTZJ9.1B-T2	Z DIODE		
D6211	1SS119-041-T2	DIODE		
D6221	1SS119-041-T2	DIODE		
D6231	1SS119-041-T2	DIODE		
D6311	MTZJ11B-T2	Z DIODE		
D6321	MTZJ5.6C-T2	Z DIODE		
D6331	MTZJ11B-T2	Z DIODE		
D6341	1SS119-041-T2	DIODE		
D6342	MTZJ6 2B-T2	Z DIODE		
D6351	MTZJ11B-T2	Z DIODE		
D6352	1SS119-041-T2	DIODE		
D6361	MTZJ11B-T2	Z DIODE		
D6511	1SS119-041-T2	DIODE		
D6521	1SS119-041-T2	DIODE		
D6531	1SS119-041-T2	DIODE		
D6601	1SS119-041-T2	DIODE		
D6701	1SS119-041-T2	DIODE		
D6801	MTZJ15B-T2	Z DIODE		
D6802	MTZJ15B-T2	Z DIODE		
D6803	MTZJ36B-T2	Z DIODE		
D6804	MTZJ36B-T2	Z DIODE		
C5000	QETN1HM-226Z	E CAPACITOR	22uF 50V M	
C5001	QETN1HM-226Z	E CAPACITOR	22uF 50V M	
C5002	QDGB1HK-102Y	C CAPACITOR	1000pF 50V K	
C5003	QEKC1EM-106Z	E CAPACITOR	10uF 25V M	
C5004	QCBB1HK-104Y	C CAPACITOR	0.1uF 50V K	
C5005	QCBB1HK-101Y	C CAPACITOR	100pF 50V K	
C5006	QEKC1AM-107Z	E CAPACITOR	100uF 10V M	
C5007	QCBB1HK-104Y	C CAPACITOR	0.1uF 50V K	
C6001	QETN1HM-107Z	E CAPACITOR	100uF 50V M	
C6002	QETN1HM-106Z	E CAPACITOR	10uF 50V M	
C6003	QETN1HM-106Z	E CAPACITOR	10uF 50V M	
C6004	QETN1HM-107Z	E CAPACITOR	100uF 50V M	
C6005	QETN1HM-105Z	E CAPACITOR	1uF 50V M	
C6111	QCBB1HK-221Y	C CAPACITOR	220pF 50V K	
C6112	QETN1HM-106Z	E CAPACITOR	10uF 50V M	
C6113	QCBB1HK-471Y	C CAPACITOR	470pF 50V K	
C6121	QCBB1HK-221Y	C CAPACITOR	220pF 50V K	
C6122	QETN1HM-106Z	E CAPACITOR	10uF 50V M	
C6123	QCBB1HK-471Y	C CAPACITOR	470pF 50V K	
C6131	QCBB1HK-221Y	C CAPACITOR	220pF 50V K	

⚠ Symbol No.	Part No.	Part Name	Description	Local
C6132	QETN1HM-106Z	E CAPACITOR	10uF 50V M	
C6133	QCBB1HK-471Y	C CAPACITOR	470pF 50V K	
C6211	QETN1JM-476Z	E CAPACITOR	47uF 63V M	
C6212	QCSB1HK-4R7Y	C CAPACITOR	4.7pF 50V K	
C6213	QFLC1HJ-104Z	M CAPACITOR	0.1uF 50V J	
C6214	QFLC1HJ-104Z	M CAPACITOR	0.1uF 50V J	
C6221	QETN1JM-476Z	E CAPACITOR	47uF 63V M	
C6222	QCSB1HK-4R7Y	C CAPACITOR	4.7pF 50V K	
C6223	QFLC1HJ-104Z	M CAPACITOR	0.1uF 50V J	
C6224	QFLC1HJ-104Z	M CAPACITOR	0.1uF 50V J	
C6231	QETN1JM-476Z	E CAPACITOR	47uF 63V M	
C6232	QCSB1HK-4R7Y	C CAPACITOR	4.7pF 50V K	
C6233	QFLC1HJ-104Z	M CAPACITOR	0.1uF 50V J	
C6234	QFLC1HJ-104Z	M CAPACITOR	0.1uF 50V J	
C6311	QETN1EM-476Z	E CAPACITOR	47uF 25V M	
C6312	QETN1CM-107Z	E CAPACITOR	100uF 16V M	
C6321	QETN1EM-476Z	E CAPACITOR	47uF 25V M	
C6322	QETN1CM-107Z	E CAPACITOR	100uF 16V M	
C6331	QETN1EM-476Z	E CAPACITOR	47uF 25V M	
C6332	QETN1CM-107Z	E CAPACITOR	100uF 16V M	
C6341	QETN1EM-476Z	E CAPACITOR	47uF 25V M	
C6342	QETN1CM-107Z	E CAPACITOR	100uF 16V M	
C6361	QETN1EM-476Z	E CAPACITOR	47uF 25V M	
C6362	QETN1CM-107Z	E CAPACITOR	100uF 16V M	
C6401	QETN1EM-476Z	E CAPACITOR	47uF 25V M	
C6402	QETN1CM-107Z	E CAPACITOR	100uF 16V M	
C6511	QETN1JM-476Z	E CAPACITOR	47uF 63V M	
C6512	QCSB1HK-4R7Y	C CAPACITOR	4.7pF 50V K	
C6513	QFLC1HJ-104Z	M CAPACITOR	0.1uF 50V J	
C6514	QFLC1HJ-104Z	M CAPACITOR	0.1uF 50V J	
C6521	QETN1JM-476Z	E CAPACITOR	47uF 63V M	
C6522	QCSB1HK-4R7Y	C CAPACITOR	4.7pF 50V K	
C6523	QFLC1HJ-104Z	M CAPACITOR	0.1uF 50V J	
C6524	QFLC1HJ-104Z	M CAPACITOR	0.1uF 50V J	
C6531	QETN1JM-476Z	E CAPACITOR	47uF 63V M	
C6532	QCSB1HK-4R7Y	C CAPACITOR	4.7pF 50V K	
C6533	QFLC1HJ-104Z	M CAPACITOR	0.1uF 50V J	
C6534	QFLC1HJ-104Z	M CAPACITOR	0.1uF 50V J	
C6601	QETN1AM-107Z	E CAPACITOR	100uF 10V M	
C6602	QFZ0212-104Z	M CAPACITOR	0.1uF	
C6603	QFZ0212-104Z	M CAPACITOR	0.1uF	
C6604	QETN1HM-105Z	E CAPACITOR	1uF 50V M	
C6701	QETN1HM-106Z	E CAPACITOR	10uF 50V M	
C6702	QETN1CM-476Z	E CAPACITOR	47uF 16V M	
C6703	QETN1HM-106Z	E CAPACITOR	10uF 50V M	
C6911	QCBB1HK-221Y	C CAPACITOR	220pF 50V K	
C6912	QTE1V06-106Z	E CAPACITOR	10uF 35V	
C6913	QCBB1HK-101Y	C CAPACITOR	100pF 50V K	
C6921	QCBB1HK-221Y	C CAPACITOR	220pF 50V K	
C6922	QTE1V06-106Z	E CAPACITOR	10uF 35V	
C6923	QCBB1HK-101Y	C CAPACITOR	100pF 50V K	
C6931	QCBB1HK-221Y	C CAPACITOR	220pF 50V K	
C6932	QTE1V06-106Z	E CAPACITOR	10uF 35V	
C6933	QCBB1HK-471Y	C CAPACITOR	470pF 50V K	
R5000	QRE141J-102Y	C RESISTOR	1kΩ 1/4W J	
R5001	QRE141J-102Y	C RESISTOR	1kΩ 1/4W J	
R5002	QRE141J-122Y	C RESISTOR	1.2kΩ 1/4W J	
R5003	QRE141J-152Y	C RESISTOR	1.5kΩ 1/4W J	
R5004	QRE141J-222Y	C RESISTOR	2.2kΩ 1/4W J	
R5005	QRE141J-272Y	C RESISTOR	2.7kΩ 1/4W J	
R5006	QRE141J-392Y	C RESISTOR	3.9kΩ 1/4W J	
R5007	QRE141J-562Y	C RESISTOR	5.6kΩ 1/4W J	
R5008	QRE141J-103Y	C RESISTOR	10kΩ 1/4W J	
R5009	QRE141J-102Y	C RESISTOR	1kΩ 1/4W J	
R5010	QRE141J-102Y	C RESISTOR	1kΩ 1/4W J	
R5011	QRE141J-122Y	C RESISTOR	1.2kΩ 1/4W J	
R5012	QRE141J-152Y	C RESISTOR	1.5kΩ 1/4W J	
R5013	QRE141J-222Y	C RESISTOR	2.2kΩ 1/4W J	
R5014	QRE141J-272Y	C RESISTOR	2.7kΩ 1/4W J	
R5015	QRE141J-392Y	C RESISTOR	3.9kΩ 1/4W J	
R5016	QRE141J-102Y	C RESISTOR	1kΩ 1/4W J	
R5017	QRE141J-102Y	C RESISTOR	1kΩ 1/4W J	
R5018	QRE141J-122Y	C RESISTOR	1.2kΩ 1/4W J	
R5019	QRE141J-152Y	C RESISTOR	1.5kΩ 1/4W J	
R5020	QRE141J-222Y	C RESISTOR	2.2kΩ 1/4W J	
R5021	QRE141J-272Y	C RESISTOR	2.7kΩ 1/4W J	
R5022	QRE141J-392Y	C RESISTOR	3.9kΩ 1/4W J	

⚠ Symbol No.	Part No.	Part Name	Description	Local
R5023	QRE141J-562Y	C RESISTOR	5.6kΩ 1/4W J	
R5024	QRE141J-102Y	C RESISTOR	1kΩ 1/4W J	
R5025	QRE141J-102Y	C RESISTOR	1kΩ 1/4W J	
R5026	QRE141J-122Y	C RESISTOR	1.2kΩ 1/4W J	
R5027	QRE141J-152Y	C RESISTOR	1.5kΩ 1/4W J	
R5028	QRE141J-222Y	C RESISTOR	2.2kΩ 1/4W J	
R5029	QRE141J-272Y	C RESISTOR	2.7kΩ 1/4W J	
R5030	QRE141J-392Y	C RESISTOR	3.9kΩ 1/4W J	
R5035	QRE141J-161Y	C RESISTOR	160Ω 1/4W J	
R5036	QRE141J-161Y	C RESISTOR	160Ω 1/4W J	
R5037	QRE141J-560Y	C RESISTOR	56Ω 1/4W J	
R5038	QRE141J-102Y	C RESISTOR	1kΩ 1/4W J	
R5039	QRE141J-102Y	C RESISTOR	1kΩ 1/4W J	
R5040	QRE141J-102Y	C RESISTOR	1kΩ 1/4W J	
R5041	QRE141J-102Y	C RESISTOR	1kΩ 1/4W J	
R5042	QRE141J-103Y	C RESISTOR	10kΩ 1/4W J	
R5043	QRE141J-271Y	C RESISTOR	270Ω 1/4W J	
R5044	QRE141J-821Y	C RESISTOR	820Ω 1/4W J	
R5045	QRE141J-104Y	C RESISTOR	100kΩ 1/4W J	
R5046	QRE141J-104Y	C RESISTOR	100kΩ 1/4W J	
R6001	QRJ146J-101X	UNF C RESISTOR	100Ω 1/4W J	
R6002	QRJ146J-101X	UNF C RESISTOR	100Ω 1/4W J	
R6003	QRE141J-103Y	C RESISTOR	10kΩ 1/4W J	
R6004	QRE141J-103Y	C RESISTOR	10kΩ 1/4W J	
R6005	QRE141J-333Y	C RESISTOR	33kΩ 1/4W J	
R6006	QRJ146J-100X	UNF C RESISTOR	10Ω 1/4W J	
R6111	QRE141J-102Y	C RESISTOR	1kΩ 1/4W J	
R6112	QRE141J-563Y	C RESISTOR	56kΩ 1/4W J	
R6121	QRE141J-102Y	C RESISTOR	1kΩ 1/4W J	
R6122	QRE141J-563Y	C RESISTOR	56kΩ 1/4W J	
R6131	QRE141J-102Y	C RESISTOR	1kΩ 1/4W J	
R6132	QRE141J-563Y	C RESISTOR	56kΩ 1/4W J	
⚠ R6211	QRT01DJ-R22X	MF RESISTOR	0.22Ω 1W J	
R6212	QRE141J-563Y	C RESISTOR	56kΩ 1/4W J	
⚠ R6213	QRJ146J-100X	UNF C RESISTOR	10Ω 1/4W J	
R6214	QRJ146J-100X	UNF C RESISTOR	10Ω 1/4W J	
R6215	QRE141J-102Y	C RESISTOR	1kΩ 1/4W J	
R6216	QRE141J-562Y	C RESISTOR	5.6kΩ 1/4W J	
R6217	QRE141J-473Y	C RESISTOR	47kΩ 1/4W J	
R6218	QRJ146J-821X	UNF C RESISTOR	820Ω 1/4W J	
R6219	QRE141J-104Y	C RESISTOR	100kΩ 1/4W J	
⚠ R6221	QRT01DJ-R22X	MF RESISTOR	0.22Ω 1W J	
R6222	QRE141J-563Y	C RESISTOR	56kΩ 1/4W J	
⚠ R6223	QRJ146J-100X	UNF C RESISTOR	10Ω 1/4W J	
⚠ R6224	QRJ146J-100X	UNF C RESISTOR	10Ω 1/4W J	
R6225	QRE141J-102Y	C RESISTOR	1kΩ 1/4W J	
R6226	QRE141J-562Y	C RESISTOR	5.6kΩ 1/4W J	
R6227	QRE141J-473Y	C RESISTOR	47kΩ 1/4W J	
R6228	QRJ146J-821X	UNF C RESISTOR	820Ω 1/4W J	
R6229	QRE141J-104Y	C RESISTOR	100kΩ 1/4W J	
⚠ R6231	QRT01DJ-R22X	MF RESISTOR	0.22Ω 1W J	
R6232	QRE141J-563Y	C RESISTOR	56kΩ 1/4W J	
⚠ R6233	QRJ146J-100X	UNF C RESISTOR	10Ω 1/4W J	
R6234	QRJ146J-100X	UNF C RESISTOR	10Ω 1/4W J	
R6235	QRE141J-102Y	C RESISTOR	1kΩ 1/4W J	
R6236	QRE141J-562Y	C RESISTOR	5.6kΩ 1/4W J	
R6237	QRE141J-473Y	C RESISTOR	47kΩ 1/4W J	
⚠ R6238	QRJ146J-821X	UNF C RESISTOR	820Ω 1/4W J	
R6239	QRE141J-104Y	C RESISTOR	100kΩ 1/4W J	
R6321	QRE141J-103Y	C RESISTOR	10kΩ 1/4W J	
R6342	QRE141J-102Y	C RESISTOR	1kΩ 1/4W J	
⚠ R6351	QRJ146J-4R7X	UNF C RESISTOR	4.7Ω 1/4W J	
R6352	QRE141J-242Y	C RESISTOR	2.4kΩ 1/4W J	
R6353	QRE141J-100Y	C RESISTOR	10Ω 1/4W J	
R6354	QRE141J-271Y	C RESISTOR	270Ω 1/4W J	
R6355	QRE141J-242Y	C RESISTOR	2.4kΩ 1/4W J	
R6356	QRE141J-103Y	C RESISTOR	10kΩ 1/4W J	
R6357	QRE141J-102Y	C RESISTOR	1kΩ 1/4W J	
R6358	QRE141J-103Y	C RESISTOR	10kΩ 1/4W J	
R6501	QRE141J-202Y	C RESISTOR	2kΩ 1/4W J	
R6502	QRE141J-202Y	C RESISTOR	2kΩ 1/4W J	
R6503	QRE141J-202Y	C RESISTOR	2kΩ 1/4W J	
R6510	QRE141J-102Y	C RESISTOR	1kΩ 1/4W J	
⚠ R6511	QRZ0224-R22	EMIT RESISTOR	0.22Ω	
R6512	QRE141J-563Y	C RESISTOR	56kΩ 1/4W J	
⚠ R6513	QRJ146J-100X	UNF C RESISTOR	10Ω 1/4W J	
R6514	QRJ146J-100X	UNF C RESISTOR	10Ω 1/4W J	
R6515	QRE141J-202Y	C RESISTOR	2kΩ 1/4W J	

⚠ Symbol No.	Part No.	Part Name	Descrip ion	Local
R6516	QRE141J-562Y	C RESISTOR	5.6kΩ 1/4W J	
R6517	QRE141J-473Y	C RESISTOR	47kΩ 1/4W J	
⚠ R6518	QRJ146J-681X	UNF C RESISTOR	680Ω 1/4W J	
R6519	QRE141J-104Y	C RESISTOR	100kΩ 1/4W J	
R6520	QRE141J-102Y	C RESISTOR	1kΩ 1/4W J	
⚠ R6521	QRZ0224-R22	EMIT RESISTOR	0.22Ω	
R6522	QRE141J-563Y	C RESISTOR	56kΩ 1/4W J	
⚠ R6523	QRJ146J-100X	UNF C RESISTOR	10Ω 1/4W J	
⚠ R6524	QRJ146J-100X	UNF C RESISTOR	10Ω 1/4W J	
R6525	QRE141J-202Y	C RESISTOR	2kΩ 1/4W J	
R6526	QRE141J-562Y	C RESISTOR	5.6kΩ 1/4W J	
R6527	QRE141J-473Y	C RESISTOR	47kΩ 1/4W J	
⚠ R6528	QRJ146J-681X	UNF C RESISTOR	680Ω 1/4W J	
R6529	QRE141J-104Y	C RESISTOR	100kΩ 1/4W J	
R6530	QRE141J-102Y	C RESISTOR	1kΩ 1/4W J	
⚠ R6531	QRZ0224-R22	EMIT RESISTOR	0.22Ω	
R6532	QRE141J-563Y	C RESISTOR	56kΩ 1/4W J	
⚠ R6533	QRJ146J-100X	UNF C RESISTOR	10Ω 1/4W J	
R6534	QRJ146J-100X	UNF C RESISTOR	10Ω 1/4W J	
R6535	QRE141J-202Y	C RESISTOR	2kΩ 1/4W J	
R6536	QRE141J-562Y	C RESISTOR	5.6kΩ 1/4W J	
R6537	QRE141J-473Y	C RESISTOR	47kΩ 1/4W J	
⚠ R6538	QRJ146J-681X	UNF C RESISTOR	680Ω 1/4W J	
R6539	QRE141J-104Y	C RESISTOR	100kΩ 1/4W J	
R6601	QRE141J-222Y	C RESISTOR	2.2kΩ 1/4W J	
R6602	QRE141J-104Y	C RESISTOR	100kΩ 1/4W J	
R6603	QRE141J-103Y	C RESISTOR	10kΩ 1/4W J	
R6604	QRE141J-103Y	C RESISTOR	10kΩ 1/4W J	
⚠ R6605	QRJ146J-470X	UNF C RESISTOR	47Ω 1/4W J	
R6606	QRE141J-103Y	C RESISTOR	10kΩ 1/4W J	
R6607	QRE141J-103Y	C RESISTOR	10kΩ 1/4W J	
⚠ R6608	QRJ146J-470X	UNF C RESISTOR	47Ω 1/4W J	
R6701	QRE141J-103Y	C RESISTOR	10kΩ 1/4W J	
R6702	QRE141J-104Y	C RESISTOR	100kΩ 1/4W J	
R6703	QRE141J-103Y	C RESISTOR	10kΩ 1/4W J	
R6704	QRE141J-104Y	C RESISTOR	100kΩ 1/4W J	
R6705	QRE141J-103Y	C RESISTOR	10kΩ 1/4W J	
R6706	QRE141J-104Y	C RESISTOR	100kΩ 1/4W J	
R6801	QRE141J-682Y	C RESISTOR	6.8kΩ 1/4W J	
R6802	QRE141J-682Y	C RESISTOR	6.8kΩ 1/4W J	
R6803	QRE141J-682Y	C RESISTOR	6.8kΩ 1/4W J	
R6804	QRE141J-682Y	C RESISTOR	6.8kΩ 1/4W J	
⚠ R6805	QRJ146J-100X	UNF C RESISTOR	10Ω 1/4W J	
R6806	QRE141J-333Y	C RESISTOR	33kΩ 1/4W J	
R6911	QRE141J-102Y	C RESISTOR	1kΩ 1/4W J	
R6912	QRE141J-563Y	C RESISTOR	56kΩ 1/4W J	
R6921	QRE141J-102Y	C RESISTOR	1kΩ 1/4W J	
R6922	QRE141J-563Y	C RESISTOR	56kΩ 1/4W J	
R6931	QRE141J-102Y	C RESISTOR	1kΩ 1/4W J	
R6932	QRE141J-563Y	C RESISTOR	56kΩ 1/4W J	
L6211	QQLZ035-R39	COIL	0.39uH	
L6221	QQLZ035-R39	COIL	0.39uH	
L6231	QQLZ035-R39	COIL	0.39uH	
L6511	QQLZ035-R39	COIL	0.39uH	
L6521	QQLZ035-R39	COIL	0.39uH	
L6531	QQLZ035-R39	COIL	0.39uH	
CN500	QGF1036F1-19	CONNECTOR	FFC/FPC (1-19)	
CN601	QGB2510K2-20	CONNECTOR	B-B (1-20)	
CN602	QGF1205C1-19	CONNECTOR	FFC/FPC (1-19)	
CN603	QGF1205F1-11	CONNECTOR	FFC/FPC (1-11)	
CN604	QGA2501F1-03	CONNECTOR	W-B (1-3)	
CN651	QGB2510K2-16	CONNECTOR	B-B (1-16)	
CN652	QGF1205C1-08	CONNECTOR	FFC/FPC (1-8)	
CN970	QGB2510J1-04	CONNECTOR	B-B (1-4)	
FL500	QLF0150-001	FL TUBE		
FW500	QUM153-18DGZ4-E	FLAT W RE		
J970	QNB0262-001	SPK TERMINAL		
S5000	QSW1121-001Z	PUSH SW I.M		
S5001	QSW1121-001Z	PUSH SW I.M		
S5002	QSW1121-001Z	PUSH SW I.M		
S5003	QSW1121-001Z	PUSH SW I.M		
S5004	QSW1121-001Z	PUSH SW I.M		
S5005	QSW1121-001Z	PUSH SW I.M		
S5006	QSW1121-001Z	PUSH SW I.M		
S5007	QSW1121-001Z	PUSH SW I.M		
S5008	QSW1121-001Z	PUSH SW I.M		

⚠ Symbol No.	Part No.	Part Name	Descrip ion	Local
S5009	QSW1121-001Z	PUSH SW I.M		
S5010	QSW1121-001Z	PUSH SW I.M		
S5011	QSW1121-001Z	PUSH SW I.M		
S5012	QSW1121-001Z	PUSH SW I.M		
S5013	QSW1121-001Z	PUSH SW I.M		
S5014	QSW1121-001Z	PUSH SW I.M		
S5015	QSW1121-001Z	PUSH SW I.M		
S5016	QSW1121-001Z	PUSH SW I.M		
S5017	QSW1121-001Z	PUSH SW I.M		
S5018	QSW1121-001Z	PUSH SW I.M		
S5019	QSW1121-001Z	PUSH SW I.M		
S5020	QSW1121-001Z	PUSH SW I.M		
S5021	QSW1121-001Z	PUSH SW I.M		
S5022	QSW1121-001Z	PUSH SW I.M		
S5023	QSW1121-001Z	PUSH SW I.M		
S5024	QSW1121-001Z	PUSH SW I.M		
S5025	QSW1121-001Z	PUSH SW I.M		
S5026	QSW1121-001Z	PUSH SW I.M		
S5027	QSW1121-001Z	PUSH SW I.M		
S5028	QSW1121-001Z	PUSH SW I.M		
S5029	QSW1121-001Z	PUSH SW I.M		
S5030	QSW1121-001Z	PUSH SW I.M		
S5031	QSW1121-001Z	PUSH SW I.M		
S5032	QSW1121-001Z	PUSH SW I.M		
S5033	QSW1121-001Z	PUSH SW I.M		
S5034	QSW1121-001Z	PUSH SW I.M		
SP500	GV40205-004A	IC HOLDER		

Main board (DX-T7)

Block No. [0][5]

⚠ Symbol No.	Part No.	Part Name	Descrip ion	Local
IC760	SN74AHCT08NS-X	IC		
IC770	MN101C49GFS1	MASK ROM		
IC771	BR24L02F-W-X	IC		
IC800	RC4558D-X	IC		
IC801	RC4558D-X	IC		
IC810	CD4066BM-X	IC		
IC820	LC75342M-X	IC		
IC830	RC4558D-X	IC		
IC850	M65851FP	IC		
IC860	JCV8011-X	IC		
IC870	LC75341M-X	IC		
IC880	LC75341M-X	IC		
IC881	RC4558D-X	IC		
IC901	RC4580ID-X	IC		
Q7000	KTC3199/GL/-T	TRANSISTOR		
Q7010	KTC3199/GL/-T	TRANSISTOR		
Q7080	KRC107S-X	DIGI TRANSISTOR		
Q7081	KRC111S-X	TRANSISTOR		
Q7788	KRA102S-X	DIGI TRANSISTOR		
Q7794	KRA102S-X	DIGI TRANSISTOR		
Q7798	KRA102S-X	DIGI TRANSISTOR		
Q8000	2SD2114K/VW/-X	TRANSISTOR		
Q8030	KTC3875/YG/-X	SI TRANSISTOR		
Q8031	KTC3875/YG/-X	SI TRANSISTOR		
Q8032	KTC3875/YG/-X	SI TRANSISTOR		
Q8040	2SD2114K/VW/-X	TRANSISTOR		
Q8070	2SD2114K/VW/-X	TRANSISTOR		
Q8071	2SD2114K/VW/-X	TRANSISTOR		
Q8080	2SD2114K/VW/-X	TRANSISTOR		
Q8081	2SD2114K/VW/-X	TRANSISTOR		
Q8100	2SD2114K/VW/-X	TRANSISTOR		
Q8130	KTC3875/YG/-X	SI TRANSISTOR		
Q8131	KTC3875/YG/-X	SI TRANSISTOR		
Q8132	KTC3875/YG/-X	SI TRANSISTOR		
Q8140	2SD2114K/VW/-X	TRANSISTOR		
Q8170	2SD2114K/VW/-X	TRANSISTOR		
Q8171	2SD2114K/VW/-X	TRANSISTOR		
Q8180	2SD2114K/VW/-X	TRANSISTOR		
Q8211	KRC104S-X	TRANSISTOR		
Q8212	KRC104S-X	TRANSISTOR		

⚠ Symbol No.	Part No.	Part Name	Description	Local
Q8260	KTC3199/GL/-T	TRANSISTOR		
Q8524	KTC1027/OY/-T	TRANSISTOR		
Q8900	KRA104S-X	DIGI TRANSISTOR		
Q9001	2SD2114K/VW/-X	TRANSISTOR		
Q9002	2SD2114K/VW/-X	TRANSISTOR		
Q9003	KRC111S-X	TRANSISTOR		
Q9004	KTA1504/YG/-X	SI TRANSISTOR		
Q9100	KRA111S-X	D. TRANSISTOR		
Q9101	2SD2114K/VW/-X	TRANSISTOR		
Q9102	2SD2114K/VW/-X	TRANSISTOR		
Q9103	2SD2114K/VW/-X	TRANSISTOR		
Q9104	2SD2114K/VW/-X	TRANSISTOR		
D7000	1SS133-T2	SI DIODE		
D7001	1SS133-T2	SI DIODE		
D7010	1SS133-T2	SI DIODE		
D7012	1SS133-T2	SI DIODE		
D7050	MTZJ5.1B-T2	Z DIODE		
D7080	1SS133-T2	SI DIODE		
D7081	MTZJ4.7B-T2	Z DIODE		
D7082	1SS133-T2	SI DIODE		
D7151	1SS133-T2	SI DIODE		
D7152	1SS133-T2	SI DIODE		
D7153	1SS133-T2	SI DIODE		
D7154	1SS133-T2	SI DIODE		
D7155	1SS133-T2	SI DIODE		
D7156	1SS133-T2	SI DIODE		
D7390	1SS133-T2	SI DIODE		
D7711	1SS133-T2	SI DIODE		
D7713	1N4003S-T5	SI DIODE		
D8230	1SS133-T2	SI DIODE		
D8524	MTZJ5.6B-T2	Z DIODE		
D8900	1SS133-T2	SI DIODE		
D8901	1SS133-T2	SI DIODE		
D9001	1SS133-T2	SI DIODE		
D9002	1SS133-T2	SI DIODE		
D9100	MTZJ2.4B-T2	Z DIODE		
C7050	QETN1HM-475Z	E CAPACITOR	4.7uF 50V M	
C7080	NCB31HK-102X	C CAPACITOR	1000pF 50V K	
C7082	QETN1HM-475Z	E CAPACITOR	4.7uF 50V M	
C7083	NCB31HK-103X	C CAPACITOR	0.01uF 50V K	
C7084	QETN0JM-227Z	E CAPACITOR	220uF 6.3V M	
C7085	QETN0JM-108Z	E CAPACITOR	1000uF 6.3V M	
C7101	QCBB1HK-101Y	C CAPACITOR	100pF 50V K	
C7710	QCBB1HK-103Y	C CAPACITOR	0.01uF 50V K	
C7711	QETN1CM-107Z	E CAPACITOR	100uF 16V M	
C7712	NCS31HJ-180X	C CAPACITOR	18pF 50V J	
C7713	NCS31HJ-180X	C CAPACITOR	18pF 50V J	
C7788	QETN1HM-106Z	E CAPACITOR	10uF 50V M	
C7794	QETN1EM-476Z	E CAPACITOR	47uF 25V M	
C7798	QETN1AM-227Z	E CAPACITOR	220uF 10V M	
C8000	QTE1V06-106Z	E CAPACITOR	10uF 35V	
C8001	QTE1V06-106Z	E CAPACITOR	10uF 35V	
C8002	QTE1V06-106Z	E CAPACITOR	10uF 35V	
C8003	NCS31HJ-151X	C CAPACITOR	150pF 50V J	
C8020	QETN1HM-475Z	E CAPACITOR	4.7uF 50V M	
C8021	QETN1HM-475Z	E CAPACITOR	4.7uF 50V M	
C8022	QETN1HM-475Z	E CAPACITOR	4.7uF 50V M	
C8023	QETN1HM-475Z	E CAPACITOR	4.7uF 50V M	
C8025	QTE1H28-106Z	E CAPACITOR	10uF 50V	
C8026	QFLC1HJ-272Z	M CAPACITOR	2700pF 50V J	
C8027	QFLC1HJ-104Z	M CAPACITOR	0.1uF 50V J	
C8028	QFLC1HJ-104Z	M CAPACITOR	0.1uF 50V J	
C8030	QFLC1HJ-104Z	M CAPACITOR	0.1uF 50V J	
C8031	QFLC1HJ-104Z	M CAPACITOR	0.1uF 50V J	
C8032	QTE1C06-226Z	E CAPACITOR	22uF 16V	
C8060	QTE1V06-106Z	E CAPACITOR	10uF 35V	
C8061	QTE1V06-106Z	E CAPACITOR	10uF 35V	
C8062	QTE1V06-106Z	E CAPACITOR	10uF 35V	
C8070	QETN1HM-106Z	E CAPACITOR	10uF 50V M	
C8072	QETN1HM-106Z	E CAPACITOR	10uF 50V M	
C8074	QETN1HM-105Z	E CAPACITOR	1uF 50V M	
C8076	QETN1HM-104Z	E CAPACITOR	0.1uF 50V M	
C8080	QETN1HM-106Z	E CAPACITOR	10uF 50V M	
C8082	QETN1HM-104Z	E CAPACITOR	0.1uF 50V M	
C8083	QETN1HM-104Z	E CAPACITOR	0.1uF 50V M	
C8084	QETN1HM-105Z	E CAPACITOR	1uF 50V M	

⚠ Symbol No.	Part No.	Part Name	Description	Local
C8086	QETN1HM-104Z	E CAPACITOR	0.1uF 50V M	
C8092	NRSA63J-822X	MG RESISTOR	8.2kΩ 1/16W J	
C8100	QTE1V06-106Z	E CAPACITOR	10uF 35V	
C8101	QTE1V06-106Z	E CAPACITOR	10uF 35V	
C8102	QTE1V06-106Z	E CAPACITOR	10uF 35V	
C8103	NCS31HJ-151X	C CAPACITOR	150pF 50V J	
C8120	QETN1HM-475Z	E CAPACITOR	4.7uF 50V M	
C8121	QETN1HM-475Z	E CAPACITOR	4.7uF 50V M	
C8122	QETN1HM-475Z	E CAPACITOR	4.7uF 50V M	
C8123	QETN1HM-475Z	E CAPACITOR	4.7uF 50V M	
C8125	QTE1H28-106Z	E CAPACITOR	10uF 50V	
C8126	QFLC1HJ-272Z	M CAPACITOR	2700pF 50V J	
C8127	QFLC1HJ-104Z	M CAPACITOR	0.1uF 50V J	
C8128	QFLC1HJ-104Z	M CAPACITOR	0.1uF 50V J	
C8130	QFLC1HJ-104Z	M CAPACITOR	0.1uF 50V J	
C8131	QFLC1HJ-104Z	M CAPACITOR	0.1uF 50V J	
C8132	QTE1C06-226Z	E CAPACITOR	22uF 16V	
C8160	QTE1V06-106Z	E CAPACITOR	10uF 35V	
C8161	QTE1V06-106Z	E CAPACITOR	10uF 35V	
C8162	QTE1V06-106Z	E CAPACITOR	10uF 35V	
C8170	QETN1HM-106Z	E CAPACITOR	10uF 50V M	
C8172	QETN1HM-106Z	E CAPACITOR	10uF 50V M	
C8173	QETN1HM-104Z	E CAPACITOR	0.1uF 50V M	
C8174	QETN1HM-105Z	E CAPACITOR	1uF 50V M	
C8176	QETN1HM-104Z	E CAPACITOR	0.1uF 50V M	
C8180	QFLC1HJ-123Z	M CAPACITOR	0.012uF 50V J	
C8181	QFLC1HJ-104Z	M CAPACITOR	0.1uF 50V J	
C8183	QETN1HM-224Z	E CAPACITOR	0.22uF 50V M	
C8184	QETN1HM-106Z	E CAPACITOR	10uF 50V M	
C8185	QTE1V06-106Z	E CAPACITOR	10uF 35V	
C8192	NRSA63J-822X	MG RESISTOR	8.2kΩ 1/16W J	
C8202	QETN1HM-106Z	E CAPACITOR	10uF 50V M	
C8203	QFLC1HJ-223Z	M CAPACITOR	0.022uF 50V J	
C8204	QFLC1HJ-223Z	M CAPACITOR	0.022uF 50V J	
C8221	QCBB1HK-103Y	C CAPACITOR	0.01uF 50V K	
C8222	QTE1C06-107Z	E CAPACITOR	100uF 16V	
C8230	QETN1EM-476Z	E CAPACITOR	47uF 25V M	
C8232	QETN1HM-105Z	E CAPACITOR	1uF 50V M	
C8233	QFLC1HJ-683Z	M CAPACITOR	0.068uF 50V J	
C8261	QETN1EM-476Z	E CAPACITOR	47uF 25V M	
C8262	QFLC1HJ-223Z	M CAPACITOR	0.022uF 50V J	
C8263	QETN1HM-225Z	E CAPACITOR	2.2uF 50V M	
C8264	QETN1HM-106Z	E CAPACITOR	10uF 50V M	
C8265	QETN1HM-106Z	E CAPACITOR	10uF 50V M	
C8266	QETN1HM-475Z	E CAPACITOR	4.7uF 50V M	
C8267	QETN1EM-336Z	E CAPACITOR	33uF 25V M	
C8268	QETN1HM-224Z	E CAPACITOR	0.22uF 50V M	
C8269	QTE1H28-106Z	E CAPACITOR	10uF 50V	
C8272	QETN1CM-107Z	E CAPACITOR	100uF 16V M	
C8282	QETN1CM-107Z	E CAPACITOR	100uF 16V M	
C8360	QETN1HM-475Z	E CAPACITOR	4.7uF 50V M	
C8361	QETN1HM-475Z	E CAPACITOR	4.7uF 50V M	
C8362	QETN1HM-474Z	E CAPACITOR	0.47uF 50V M	
C8363	QETN1EM-476Z	E CAPACITOR	47uF 25V M	
C8501	QFLC1HJ-152Z	M CAPACITOR	1500pF 50V J	
C8503	QFLC1HJ-154Z	M CAPACITOR	0.15uF 50V J	
C8504	QFLC1HJ-152Z	M CAPACITOR	1500pF 50V J	
C8506	QETN1HM-225Z	E CAPACITOR	2.2uF 50V M	
C8508	QFLC1HJ-102Z	M CAPACITOR	1000pF 50V J	
C8509	QFLC1HJ-332Z	M CAPACITOR	3300pF 50V J	
C8512	QETN1HM-225Z	E CAPACITOR	2.2uF 50V M	
C8513	QETN1HM-105Z	E CAPACITOR	1uF 50V M	
C8514	QFLC1HJ-102Z	M CAPACITOR	1000pF 50V J	
C8515	QFLC1HJ-472Z	M CAPACITOR	4700pF 50V J	
C8516	QFLC1HJ-683Z	M CAPACITOR	0.068uF 50V J	
C8517	QFLC1HJ-104Z	M CAPACITOR	0.1uF 50V J	
C8518	QFLC1HJ-104Z	M CAPACITOR	0.1uF 50V J	
C8520	QFLC1HJ-683Z	M CAPACITOR	0.068uF 50V J	
C8522	QETN1EM-476Z	E CAPACITOR	47uF 25V M	
C8523	QFLC1HJ-104Z	M CAPACITOR	0.1uF 50V J	
C8524	QETN1CM-107Z	E CAPACITOR	100uF 16V M	
C8525	QETN1CM-107Z	E CAPACITOR	100uF 16V M	
C8530	QFLC1HJ-104Z	M CAPACITOR	0.1uF 50V J	
C8539	QETN1HM-104Z	E CAPACITOR	0.1uF 50V M	
C8540	QFLC1HJ-102Z	M CAPACITOR	1000pF 50V J	
C8541	QFLC1HJ-472Z	M CAPACITOR	4700pF 50V J	
C8542	QFLC1HJ-683Z	M CAPACITOR	0.068uF 50V J	
C8544	QFLC1HJ-104Z	M CAPACITOR	0.1uF 50V J	

⚠ Symbol No.	Part No.	Part Name	Descrip ion	Local
C8545	QFLC1HJ-104Z	M CAPACITOR	0.1uF 50V J	
C8546	QFLC1HJ-683Z	M CAPACITOR	0.068uF 50V J	
C8548	QFLC1HJ-102Z	M CAPACITOR	1000pF 50V J	
C8550	QFLC1HJ-472Z	M CAPACITOR	4700pF 50V J	
C8551	QETN1HM-105Z	E CAPACITOR	1uF 50V M	
C8553	QETN1HM-106Z	E CAPACITOR	10uF 50V M	
C8554	QFLC1HJ-104Z	M CAPACITOR	0.1uF 50V J	
C8555	QETN1CM-107Z	E CAPACITOR	100uF 16V M	
C8572	QFLC1HJ-223Z	M CAPACITOR	0.022uF 50V J	
C8574	QTE1V06-106Z	E CAPACITOR	10uF 35V	
C8575	QTE1V06-106Z	E CAPACITOR	10uF 35V	
C8576	QFLC1HJ-154Z	M CAPACITOR	0.15uF 50V J	
C8577	QETN1HM-104Z	E CAPACITOR	0.1uF 50V M	
C8578	QETN1HM-105Z	E CAPACITOR	1uF 50V M	
C8579	QETN1HM-105Z	E CAPACITOR	1uF 50V M	
C8580	QFLC1HJ-154Z	M CAPACITOR	0.15uF 50V J	
C8900	QETN1HM-105Z	E CAPACITOR	1uF 50V M	
C8902	QETN1HM-106Z	E CAPACITOR	10uF 50V M	
C8903	QETN1HM-106Z	E CAPACITOR	10uF 50V M	
C9000	NCB21HK-473X	C CAPACITOR	0.047uF 50V K	
C9001	QETN1HM-104Z	E CAPACITOR	0.1uF 50V M	
C9002	NCS31HJ-681X	C CAPACITOR	680pF 50V J	
C9003	QEKC1HM-105Z	E CAPACITOR	1uF 50V M	
C9004	QEKC1HM-104Z	E CAPACITOR	0.1uF 50V M	
C9005	QEKC1HM-335Z	E CAPACITOR	3.3uF 50V M	
C9006	QETN1EM-336Z	E CAPACITOR	33uF 25V M	
C9007	QEKC1HM-104Z	E CAPACITOR	0.1uF 50V M	
C9008	QETN1HM-104Z	E CAPACITOR	0.1uF 50V M	
C9009	QETN1EM-476Z	E CAPACITOR	47uF 25V M	
C9010	QEKC1CM-107Z	E CAPACITOR	100uF 16V M	
C9021	NCB31HK-102X	C CAPACITOR	1000pF 50V K	
C9022	NCB31HK-102X	C CAPACITOR	1000pF 50V K	
C9100	QDGB1HK-102Y	C CAPACITOR	1000pF 50V K	
C9101	QDGB1HK-102Y	C CAPACITOR	1000pF 50V K	
C9102	QDGB1HK-102Y	C CAPACITOR	1000pF 50V K	
C9103	QDXB1CM-392Y	C CAPACITOR	3900pF 16V M	
C9104	QDXB1CM-392Y	C CAPACITOR	3900pF 16V M	
C9105	QDGB1HK-102Y	C CAPACITOR	1000pF 50V K	
R7000	QRE141J-222Y	C RESISTOR	2.2kΩ 1/4W J	
R7001	QRL01DJ-151X	OMF RESISTOR	150Ω 1W J	
R7002	QRL01DJ-151X	OMF RESISTOR	150Ω 1W J	
R7003	QRL01DJ-151X	OMF RESISTOR	150Ω 1W J	
R7004	QRL01DJ-151X	OMF RESISTOR	150Ω 1W J	
R7005	QRL01DJ-151X	OMF RESISTOR	150Ω 1W J	
R7006	QRL01DJ-151X	OMF RESISTOR	150Ω 1W J	
R7010	QRE141J-222Y	C RESISTOR	2.2kΩ 1/4W J	
R7011	QRL01DJ-151X	OMF RESISTOR	150Ω 1W J	
R7012	QRL01DJ-151X	OMF RESISTOR	150Ω 1W J	
R7013	QRL01DJ-151X	OMF RESISTOR	150Ω 1W J	
R7014	QRL01DJ-151X	OMF RESISTOR	150Ω 1W J	
R7015	QRL01DJ-151X	OMF RESISTOR	150Ω 1W J	
R7016	QRL01DJ-151X	OMF RESISTOR	150Ω 1W J	
R7050	QRE141J-563Y	C RESISTOR	56kΩ 1/4W J	
R7080	NRSA63J-223X	MG RESISTOR	22kΩ 1/16W J	
R7081	NRSA63J-103X	MG RESISTOR	10kΩ 1/16W J	
R7082	NRSA63J-102X	MG RESISTOR	1kΩ 1/16W J	
R7083	NRSA63J-222X	MG RESISTOR	2.2kΩ 1/16W J	
R7084	NRSA63J-681X	MG RESISTOR	680Ω 1/16W J	
R7085	NRSA63J-681X	MG RESISTOR	680Ω 1/16W J	
R7151	QRE141J-123Y	C RESISTOR	12kΩ 1/4W J	
R7152	QRE141J-123Y	C RESISTOR	12kΩ 1/4W J	
R7153	QRE141J-123Y	C RESISTOR	12kΩ 1/4W J	
R7154	QRE141J-123Y	C RESISTOR	12kΩ 1/4W J	
R7155	QRE141J-123Y	C RESISTOR	12kΩ 1/4W J	
R7156	QRE141J-123Y	C RESISTOR	12kΩ 1/4W J	
R7200	NRSA63J-273X	MG RESISTOR	27kΩ 1/16W J	
R7251	QRE141J-222Y	C RESISTOR	2.2kΩ 1/4W J	
R7252	QRE141J-222Y	C RESISTOR	2.2kΩ 1/4W J	
R7253	QRE141J-222Y	C RESISTOR	2.2kΩ 1/4W J	
R7254	QRE141J-272Y	C RESISTOR	2.7kΩ 1/4W J	
R7255	QRE141J-272Y	C RESISTOR	2.7kΩ 1/4W J	
R7256	QRE141J-272Y	C RESISTOR	2.7kΩ 1/4W J	
R7702	NRSA63J-222X	MG RESISTOR	2.2kΩ 1/16W J	
R7703	NRSA63J-102X	MG RESISTOR	1kΩ 1/16W J	
R7704	NRSA63J-102X	MG RESISTOR	1kΩ 1/16W J	
R7705	NRSA63J-102X	MG RESISTOR	1kΩ 1/16W J	
R7706	NRSA63J-102X	MG RESISTOR	1kΩ 1/16W J	

⚠ Symbol No.	Part No.	Part Name	Descrip ion	Local
R7707	NRSA63J-222X	MG RESISTOR	2 2kΩ 1/16W J	
R7708	NRSA63J-222X	MG RESISTOR	2 2kΩ 1/16W J	
R7709	NRSA63J-103X	MG RESISTOR	10kΩ 1/16W J	
R7715	NRSA63J-103X	MG RESISTOR	10kΩ 1/16W J	
R7717	NRSA63J-103X	MG RESISTOR	10kΩ 1/16W J	
R7718	QRE141J-102Y	C RESISTOR	1kΩ 1/4W J	
R7719	QRE141J-102Y	C RESISTOR	1kΩ 1/4W J	
R7720	QRE141J-102Y	C RESISTOR	1kΩ 1/4W J	
R7721	NRSA63J-122X	MG RESISTOR	1 2kΩ 1/16W J	
R7722	NRSA63J-122X	MG RESISTOR	1 2kΩ 1/16W J	
R7723	NRSA63J-122X	MG RESISTOR	1 2kΩ 1/16W J	
R7724	NRSA63J-122X	MG RESISTOR	1 2kΩ 1/16W J	
R7725	NRSA63J-122X	MG RESISTOR	1 2kΩ 1/16W J	
R7726	NRSA63J-101X	MG RESISTOR	100Ω 1/16W J	
R7728	NRSA63J-222X	MG RESISTOR	2 2kΩ 1/16W J	
R7731	NRSA63J-222X	MG RESISTOR	2 2kΩ 1/16W J	
R7732	NRSA63J-103X	MG RESISTOR	10kΩ 1/16W J	
R7735	NRSA63J-102X	MG RESISTOR	1kΩ 1/16W J	
R7737	NRSA63J-102X	MG RESISTOR	1kΩ 1/16W J	
R7738	NRSA63J-102X	MG RESISTOR	1kΩ 1/16W J	
R7739	NRSA63J-102X	MG RESISTOR	1kΩ 1/16W J	
R7740	NRSA63J-102X	MG RESISTOR	1kΩ 1/16W J	
R7742	NRSA63J-102X	MG RESISTOR	1kΩ 1/16W J	
R7743	NRSA63J-102X	MG RESISTOR	1kΩ 1/16W J	
R7744	NRSA63J-102X	MG RESISTOR	1kΩ 1/16W J	
R7745	NRSA63J-103X	MG RESISTOR	10kΩ 1/16W J	
R7746	NRSA63J-102X	MG RESISTOR	1kΩ 1/16W J	
R7747	NRSA63J-0R0X	MG RESISTOR	0Ω 1/16W J	
R7748	NRSA63J-102X	MG RESISTOR	1kΩ 1/16W J	
R7749	NRSA63J-102X	MG RESISTOR	1kΩ 1/16W J	
R7751	QRE141J-222Y	C RESISTOR	2 2kΩ 1/4W J	
R7752	QRE141J-222Y	C RESISTOR	2 2kΩ 1/4W J	
R7756	NRSA63J-102X	MG RESISTOR	1kΩ 1/16W J	
R7759	NRSA63J-222X	MG RESISTOR	2 2kΩ 1/16W J	
R7760	NRSA63J-222X	MG RESISTOR	2 2kΩ 1/16W J	
R7761	NRSA63J-222X	MG RESISTOR	2 2kΩ 1/16W J	
R7762	NRSA63J-222X	MG RESISTOR	2 2kΩ 1/16W J	
R7763	NRSA63J-102X	MG RESISTOR	1kΩ 1/16W J	
R7764	NRSA63J-102X	MG RESISTOR	1kΩ 1/16W J	
R7765	NRSA63J-0R0X	MG RESISTOR	0Ω 1/16W J	
R7766	NRSA63J-0R0X	MG RESISTOR	0Ω 1/16W J	
R7767	NRSA63J-222X	MG RESISTOR	2 2kΩ 1/16W J	
R7768	NRSA63J-222X	MG RESISTOR	2 2kΩ 1/16W J	
R7769	NRSA63J-102X	MG RESISTOR	1kΩ 1/16W J	
R7770	NRSA63J-102X	MG RESISTOR	1kΩ 1/16W J	
R7771	QRE141J-104Y	C RESISTOR	100kΩ 1/4W J	
R7772	QRE141J-222Y	C RESISTOR	2 2kΩ 1/4W J	
R7773	QRE141J-222Y	C RESISTOR	2 2kΩ 1/4W J	
R7774	QRE141J-102Y	C RESISTOR	1kΩ 1/4W J	
R7775	NRSA63J-222X	MG RESISTOR	2 2kΩ 1/16W J	
R7776	NRSA63J-222X	MG RESISTOR	2 2kΩ 1/16W J	
R7777	NRSA63J-102X	MG RESISTOR	1kΩ 1/16W J	
R7778	NRSA63J-222X	MG RESISTOR	2 2kΩ 1/16W J	
R7779	NRSA63J-222X	MG RESISTOR	2 2kΩ 1/16W J	
R7780	NRSA63J-222X	MG RESISTOR	2 2kΩ 1/16W J	
R7781	NRSA63J-222X	MG RESISTOR	2 2kΩ 1/16W J	
R7786	NRSA63J-222X	MG RESISTOR	2 2kΩ 1/16W J	
R7788	NRSA63J-222X	MG RESISTOR	2 2kΩ 1/16W J	
R7789	NRSA63J-222X	MG RESISTOR	2 2kΩ 1/16W J	
R7790	NRSA63J-102X	MG RESISTOR	1kΩ 1/16W J	
R7791	NRSA63J-102X	MG RESISTOR	1kΩ 1/16W J	
R7792	NRSA63J-102X	MG RESISTOR	1kΩ 1/16W J	
R7794	NRSA63J-222X	MG RESISTOR	2 2kΩ 1/16W J	
R7796	NRSA63J-222X	MG RESISTOR	2 2kΩ 1/16W J	
R7797	NRSA63J-102X	MG RESISTOR	1kΩ 1/16W J	
R7798	NRSA63J-102X	MG RESISTOR	1kΩ 1/16W J	
R7803	NRSA63J-103X	MG RESISTOR	10kΩ 1/16W J	
R7804	NRSA63J-103X	MG RESISTOR	10kΩ 1/16W J	
R7805	NRSA63J-103X	MG RESISTOR	10kΩ 1/16W J	
R7806	NRSA63J-103X	MG RESISTOR	10kΩ 1/16W J	
R7807	NRSA63J-103X	MG RESISTOR	10kΩ 1/16W J	
R7808	NRSA63J-103X	MG RESISTOR	10kΩ 1/16W J	
R7809	NRSA63J-273X	MG RESISTOR	27kΩ 1/16W J	UW
R7809	NRSA63J-153X	MG RESISTOR	15kΩ 1/16W J	UG,UX
R7821	NRSA63J-222X	MG RESISTOR	2 2kΩ 1/16W J	
R7823	NRSA63J-222X	MG RESISTOR	2 2kΩ 1/16W J	
R7824	NRSA63J-222X	MG RESISTOR	2 2kΩ 1/16W J	
R7825	NRSA63J-222X	MG RESISTOR	2 2kΩ 1/16W J	

⚠ Symbol No.	Part No.	Part Name	Description	Local
R7852	NRSA63J-104X	MG RESISTOR	100kΩ 1/16W J	
R7867	NRSA63J-103X	MG RESISTOR	10kΩ 1/16W J	
R7871	NRSA63J-104X	MG RESISTOR	100kΩ 1/16W J	
R7875	NRSA63J-104X	MG RESISTOR	100kΩ 1/16W J	
R7876	NRSA63J-103X	MG RESISTOR	10kΩ 1/16W J	
R7878	NRSA63J-104X	MG RESISTOR	100kΩ 1/16W J	
R7879	NRSA63J-103X	MG RESISTOR	10kΩ 1/16W J	
R7881	QRE141J-103Y	C RESISTOR	10kΩ 1/4W J	
R7886	NRSA63J-103X	MG RESISTOR	10kΩ 1/16W J	
R7892	NRSA63J-103X	MG RESISTOR	10kΩ 1/16W J	
R7897	NRSA63J-103X	MG RESISTOR	10kΩ 1/16W J	
R7899	NRSA63J-103X	MG RESISTOR	10kΩ 1/16W J	
R8000	NRSA63J-473X	MG RESISTOR	47kΩ 1/16W J	
R8001	NRSA63J-473X	MG RESISTOR	47kΩ 1/16W J	
R8002	NRSA63J-223X	MG RESISTOR	22kΩ 1/16W J	
R8003	NRSA63J-223X	MG RESISTOR	22kΩ 1/16W J	
R8004	NRSA63J-222X	MG RESISTOR	2.2kΩ 1/16W J	
R8005	NRSA63J-103X	MG RESISTOR	10kΩ 1/16W J	
R8006	NRSA63J-103X	MG RESISTOR	10kΩ 1/16W J	
R8007	NRSA63J-223X	MG RESISTOR	22kΩ 1/16W J	
R8020	NRSA63J-392X	MG RESISTOR	3.9kΩ 1/16W J	
R8021	NRSA63J-104X	MG RESISTOR	100kΩ 1/16W J	
R8030	NRSA63J-472X	MG RESISTOR	4.7kΩ 1/16W J	
R8031	NRSA63J-332X	MG RESISTOR	3.3kΩ 1/16W J	
R8032	NRSA63J-123X	MG RESISTOR	12kΩ 1/16W J	
R8033	NRSA63J-114X	MG RESISTOR	110kΩ 1/16W J	
R8034	NRSA63J-473X	MG RESISTOR	47kΩ 1/16W J	
R8035	NRSA63J-101X	MG RESISTOR	100Ω 1/16W J	
R8036	NRSA63J-101X	MG RESISTOR	100Ω 1/16W J	
R8042	NRSA63J-392X	MG RESISTOR	3.9kΩ 1/16W J	
R8043	NRSA63J-103X	MG RESISTOR	10kΩ 1/16W J	
R8046	NRSA63J-393X	MG RESISTOR	39kΩ 1/16W J	
R8060	QRE141J-472Y	C RESISTOR	4.7kΩ 1/4W J	
R8061	NRSA63J-103X	MG RESISTOR	10kΩ 1/16W J	
R8062	NRSA63J-103X	MG RESISTOR	10kΩ 1/16W J	
R8070	NRSA63J-102X	MG RESISTOR	1kΩ 1/16W J	
R8071	NRSA63J-103X	MG RESISTOR	10kΩ 1/16W J	
R8072	NRSA63J-103X	MG RESISTOR	10kΩ 1/16W J	
R8073	NRSA63J-103X	MG RESISTOR	10kΩ 1/16W J	
R8074	NRSA63J-102X	MG RESISTOR	1kΩ 1/16W J	
R8075	NRSA63J-103X	MG RESISTOR	10kΩ 1/16W J	
R8080	NRSA63J-102X	MG RESISTOR	1kΩ 1/16W J	
R8081	NRSA63J-103X	MG RESISTOR	10kΩ 1/16W J	
R8082	NRSA63J-103X	MG RESISTOR	10kΩ 1/16W J	
R8083	NRSA63J-103X	MG RESISTOR	10kΩ 1/16W J	
R8084	NRSA63J-102X	MG RESISTOR	1kΩ 1/16W J	
R8085	NRSA63J-103X	MG RESISTOR	10kΩ 1/16W J	
R8090	QRE141J-153Y	C RESISTOR	15kΩ 1/4W J	
R8091	QRE141J-154Y	C RESISTOR	150kΩ 1/4W J	
R8092	NRSA63J-133X	MG RESISTOR	13kΩ 1/16W J	
R8093	NRSA63J-101X	MG RESISTOR	100Ω 1/16W J	
R8094	NRSA63J-303X	MG RESISTOR	30kΩ 1/16W J	
R8095	NRSA63J-0R0X	MG RESISTOR	0Ω 1/16W J	
R8100	NRSA63J-473X	MG RESISTOR	47kΩ 1/16W J	
R8101	NRSA63J-473X	MG RESISTOR	47kΩ 1/16W J	
R8102	NRSA63J-223X	MG RESISTOR	22kΩ 1/16W J	
R8103	NRSA63J-223X	MG RESISTOR	22kΩ 1/16W J	
R8104	NRSA63J-222X	MG RESISTOR	2.2kΩ 1/16W J	
R8105	NRSA63J-103X	MG RESISTOR	10kΩ 1/16W J	
R8106	NRSA63J-103X	MG RESISTOR	10kΩ 1/16W J	
R8107	NRSA63J-223X	MG RESISTOR	22kΩ 1/16W J	
R8120	NRSA63J-392X	MG RESISTOR	3.9kΩ 1/16W J	
R8121	NRSA63J-104X	MG RESISTOR	100kΩ 1/16W J	
R8130	NRSA63J-472X	MG RESISTOR	4.7kΩ 1/16W J	
R8131	NRSA63J-332X	MG RESISTOR	3.3kΩ 1/16W J	
R8132	NRSA63J-123X	MG RESISTOR	12kΩ 1/16W J	
R8133	NRSA63J-114X	MG RESISTOR	110kΩ 1/16W J	
R8134	NRSA63J-473X	MG RESISTOR	47kΩ 1/16W J	
R8135	NRSA63J-101X	MG RESISTOR	100Ω 1/16W J	
R8136	NRSA63J-101X	MG RESISTOR	100Ω 1/16W J	
R8142	NRSA63J-392X	MG RESISTOR	3.9kΩ 1/16W J	
R8143	NRSA63J-103X	MG RESISTOR	10kΩ 1/16W J	
R8146	NRSA63J-393X	MG RESISTOR	39kΩ 1/16W J	
R8160	QRE141J-472Y	C RESISTOR	4.7kΩ 1/4W J	
R8161	NRSA63J-103X	MG RESISTOR	10kΩ 1/16W J	
R8162	NRSA63J-103X	MG RESISTOR	10kΩ 1/16W J	
R8170	NRSA63J-102X	MG RESISTOR	1kΩ 1/16W J	
R8171	NRSA63J-103X	MG RESISTOR	10kΩ 1/16W J	

⚠ Symbol No.	Part No.	Part Name	Description	Local
R8172	NRSA63J-103X	MG RESISTOR	10kΩ 1/16W J	
R8173	NRSA63J-103X	MG RESISTOR	10kΩ 1/16W J	
R8174	NRSA63J-102X	MG RESISTOR	1kΩ 1/16W J	
R8175	NRSA63J-103X	MG RESISTOR	10kΩ 1/16W J	
R8180	NRSA63J-223X	MG RESISTOR	22kΩ 1/16W J	
R8182	NRSA63J-163X	MG RESISTOR	16kΩ 1/16W J	
R8183	NRSA63J-223X	MG RESISTOR	22kΩ 1/16W J	
R8184	NRSA63J-0R0X	MG RESISTOR	0Ω 1/16W J	
R8186	NRSA63J-103X	MG RESISTOR	10kΩ 1/16W J	
R8187	NRSA63J-102X	MG RESISTOR	1kΩ 1/16W J	
R8189	NRSA63J-104X	MG RESISTOR	100kΩ 1/16W J	
R8190	QRE141J-153Y	C RESISTOR	15kΩ 1/4W J	
R8191	QRE141J-154Y	C RESISTOR	150kΩ 1/4W J	
R8192	NRSA63J-133X	MG RESISTOR	13kΩ 1/16W J	
R8193	NRSA63J-101X	MG RESISTOR	100Ω 1/16W J	
R8194	NRSA63J-303X	MG RESISTOR	30kΩ 1/16W J	
R8195	NRSA63J-0R0X	MG RESISTOR	0Ω 1/16W J	
R8202	NRSA63J-103X	MG RESISTOR	10kΩ 1/16W J	
R8203	NRSA63J-223X	MG RESISTOR	22kΩ 1/16W J	
R8204	NRSA63J-223X	MG RESISTOR	22kΩ 1/16W J	
R8205	NRSA63J-243X	MG RESISTOR	24kΩ 1/16W J	
R8206	NRSA63J-103X	MG RESISTOR	10kΩ 1/16W J	
R8211	NRSA63J-223X	MG RESISTOR	22kΩ 1/16W J	
R8212	NRSA63J-103X	MG RESISTOR	10kΩ 1/16W J	
R8223	NRSA63J-0R0X	MG RESISTOR	0Ω 1/16W J	
R8224	NRSA63J-0R0X	MG RESISTOR	0Ω 1/16W J	
R8225	NRSA63J-0R0X	MG RESISTOR	0Ω 1/16W J	
R8230	NRSA63J-752X	MG RESISTOR	7.5kΩ 1/16W J	
R8231	NRSA63J-302X	MG RESISTOR	3kΩ 1/16W J	
R8232	QRE141J-753Y	C RESISTOR	75kΩ 1/4W J	
R8235	NRSA63J-224X	MG RESISTOR	220kΩ 1/16W J	
R8260	NRSA63J-474X	MG RESISTOR	470kΩ 1/16W J	
R8261	NRSA63J-474X	MG RESISTOR	470kΩ 1/16W J	
R8262	NRSA63J-101X	MG RESISTOR	100Ω 1/16W J	
R8263	NRSA63J-475X	MG RESISTOR	4.7MΩ 1/16W J	
R8264	NRSA63J-153X	MG RESISTOR	15kΩ 1/16W J	
R8265	NRSA63J-562X	MG RESISTOR	5.6kΩ 1/16W J	
R8266	NRSA63J-472X	MG RESISTOR	4.7kΩ 1/16W J	
R8267	NRSA63J-104X	MG RESISTOR	100kΩ 1/16W J	
R8268	NRSA63J-622X	MG RESISTOR	6.2kΩ 1/16W J	
R8269	QRE141J-222Y	C RESISTOR	2.2kΩ 1/4W J	
R8293	QRE141J-393Y	C RESISTOR	39kΩ 1/4W J	
R8335	NRSA63J-224X	MG RESISTOR	220kΩ 1/16W J	
R8507	NRSA63J-104X	MG RESISTOR	100kΩ 1/16W J	
R8508	NRSA63J-243X	MG RESISTOR	24kΩ 1/16W J	
R8509	NRSA63J-243X	MG RESISTOR	24kΩ 1/16W J	
R8510	NRSA63J-243X	MG RESISTOR	24kΩ 1/16W J	
R8511	NRSA63J-243X	MG RESISTOR	24kΩ 1/16W J	
R8512	NRSA63J-243X	MG RESISTOR	24kΩ 1/16W J	
R8513	NRSA63J-243X	MG RESISTOR	24kΩ 1/16W J	
R8514	NRSA63J-243X	MG RESISTOR	24kΩ 1/16W J	
R8521	NRSA63J-243X	MG RESISTOR	24kΩ 1/16W J	
R8523	QRZ9006-4R7X	F.RESISTOR	4.7Ω 1/4W J	
R8524	QRE141J-561Y	C RESISTOR	560Ω 1/4W J	
R8529	NRSA63J-113X	MG RESISTOR	11kΩ 1/16W J	
R8539	QRE141J-822Y	C RESISTOR	8.2kΩ 1/4W J	
R8551	NRSA63J-223X	MG RESISTOR	22kΩ 1/16W J	
R8574	NRSA63J-223X	MG RESISTOR	22kΩ 1/16W J	
R8575	NRSA63J-223X	MG RESISTOR	22kΩ 1/16W J	
R8578	NRSA63J-681X	MG RESISTOR	680Ω 1/16W J	
R8579	NRSA63J-103X	MG RESISTOR	10kΩ 1/16W J	
R8888	NRSA63J-0R0X	MG RESISTOR	0Ω 1/16W J	
R8900	QRE141J-102Y	C RESISTOR	1kΩ 1/4W J	
R9000	NRSA63J-103X	MG RESISTOR	10kΩ 1/16W J	
R9001	NRSA63J-104X	MG RESISTOR	100kΩ 1/16W J	
R9002	NRSA63J-102X	MG RESISTOR	1kΩ 1/16W J	
R9003	NRSA63J-124X	MG RESISTOR	120kΩ 1/16W J	
R9004	NRSA63J-222X	MG RESISTOR	2.2kΩ 1/16W J	
R9005	NRSA63J-102X	MG RESISTOR	1kΩ 1/16W J	
R9006	NRSA63J-103X	MG RESISTOR	10kΩ 1/16W J	
R9007	NRSA63J-104X	MG RESISTOR	100kΩ 1/16W J	
R9008	NRSA63J-102X	MG RESISTOR	1kΩ 1/16W J	
R9009	NRSA63J-473X	MG RESISTOR	47kΩ 1/16W J	
R9010	NRSA63J-473X	MG RESISTOR	47kΩ 1/16W J	
R9011	NRSA63J-473X	MG RESISTOR	47kΩ 1/16W J	
R9012	NRSA63J-473X	MG RESISTOR	47kΩ 1/16W J	
R9013	NRSA63J-103X	MG RESISTOR	10kΩ 1/16W J	
R9014	NRSA63J-103X	MG RESISTOR	10kΩ 1/16W J	

⚠ Symbol No.	Part No.	Part Name	Descrip ion	Local
R9015	QRE141J-221Y	C RESISTOR	220Ω 1/4W J	
R9017	NRSA63J-104X	MG RESISTOR	100kΩ 1/16W J	
R9021	NRSA63J-472X	MG RESISTOR	4.7kΩ 1/16W J	
R9022	NRSA63J-472X	MG RESISTOR	4.7kΩ 1/16W J	
R9101	NRSA63J-472X	MG RESISTOR	4.7kΩ 1/16W J	
R9102	NRSA63J-472X	MG RESISTOR	4.7kΩ 1/16W J	
R9103	NRSA63J-472X	MG RESISTOR	4.7kΩ 1/16W J	
R9104	NRSA63J-472X	MG RESISTOR	4.7kΩ 1/16W J	
VR901	QVQ0306-B24	V RESISTOR		
L9100	QQL231K-2R2Y	COIL	2.2uH K	
L9101	QQL231K-470Y	COIL	47uH K	
L9102	QQL231K-470Y	COIL	47uH K	
CN720	QGF1036C1-19	CONNECTOR	FFC/FPC (1-19)	
CN730	QGF1205C1-25	CONNECTOR	FFC/FPC (1-25)	
CN740	QGF1205F1-05	CONNECTOR	FFC/FPC (1-5)	
CN750	QGF1205F1-11	CONNECTOR	FFC/FPC (1-11)	
CN760	QGF1205C1-08	CONNECTOR	FFC/FPC (1-8)	
CN788	QGF1205C1-05	CONNECTOR	FFC/FPC (1-5)	
CN799	QGF1210G1-06	CONNECTOR	FFC/FPC (1-6)	
CN800	QGF1036C1-10	CONNECTOR	FFC/FPC (1-10)	
CN810	QGF1036C1-08	CONNECTOR	FFC/FPC (1-8)	
CN820	QGF1205C1-08	CONNECTOR	FFC/FPC (1-8)	
CN830	QGF1205C1-19	CONNECTOR	FFC/FPC (1-19)	
CN850	QGB2510J1-13	CONNECTOR	B-B (1-13)	
CN860	QGB2510K2-04	CONNECTOR	B-B (1-4)	
CN901	QGF1205F1-05	CONNECTOR	FFC/FPC (1-5)	
FW910	QUM153-21DGZ4-E	FLAT W RE		
J700	QNB0261-002	SPK TERMINAL		
J800	QNN0732-001	AUX JACK		
J901	QNS0252-001	MIC JACK		
J902	QNS0252-001	MIC JACK		
J910	QNS0170-001	HEADPHONE JACK		
K8000	NRSA63J-0R0X	MG RESISTOR	0Ω 1/16W J	
K8001	NRSA63J-0R0X	MG RESISTOR	0Ω 1/16W J	
K9100	QQR0621-001Z	FERRATE BEADS		
RY712	QSK0109-001	RELAY		
RY734	QSK0109-001	RELAY		
RY756	QSK0109-001	RELAY		
RY767	QSK0109-001	RELAY		
X7700	QAX0711-002Z	CRYSTAL	8.000000MHz	

Primary board (DX-T7)

Block No. [0][6]

⚠ Symbol No.	Part No.	Part Name	Descrip ion	Local
IC920	BH7868FS-X	IC		
IC930	GP1FAV30TK0F	OPTICAL JACK		
⚠ Q1000	KTC2026/Y/	TRANSISTOR		
Q1001	KTC3203/OY/-T	TRANSISTOR		
⚠ Q2007	KTA1046/Y/	TRANSISTOR		
Q2008	KTC3199/GL/-T	TRANSISTOR		
Q2009	KTC3199/GL/-T	TRANSISTOR		
Q9300	KRA110M-T	TRANSISTOR		
Q9301	KRC110M-T	TRANSISTOR		
Q9303	KTC3199/GL/-T	TRANSISTOR		
⚠ D1000	1N5402M-20	DIODE		
⚠ D1001	1N5402M-20	DIODE		
⚠ D1002	1N5402M-20	DIODE		
⚠ D1003	1N5402M-20	DIODE		
⚠ D1004	6A10E2	SI DIODE		
⚠ D1005	6A10E2	SI DIODE		
⚠ D1006	6A10E2	SI DIODE		
⚠ D1007	6A10E2	SI DIODE		
⚠ D1008	6A10E2	SI DIODE		
⚠ D1009	6A10E2	SI DIODE		
⚠ D1010	6A10E2	SI DIODE		
⚠ D1011	6A10E2	SI DIODE		
D1012	MTZJ6 2B-T2	Z DIODE		
D1013	MTZJ18B-T2	Z DIODE		

⚠ Symbol No.	Part No.	Part Name	Descrip ion	Local
D1014	MTZJ18B-T2	Z DIODE		
D1015	1N4003S-T5	SI DIODE		
D1016	1N4003S-T5	SI DIODE		
D1017	1N4003S-T5	SI DIODE		
⚠ D2001	6A10E2	SI DIODE		
⚠ D2002	6A10E2	SI DIODE		
⚠ D2003	6A10E2	SI DIODE		
⚠ D2004	6A10E2	SI DIODE		
D2008	2A02-M	DIODE		
D2009	MTZJ5.1C-T2	Z DIODE		
D2013	1SS133-T2	SI DIODE		
D9300	2A02-M	DIODE		
D9301	MTZJ3.3B-T2	Z DIODE		
D9302	MTZJ2 0A-T2	Z DIODE		
D9303	MTZJ3 9B-T2	Z DIODE		
D9310	MTZJ3 0B-T2	Z DIODE		
D9311	1N4003S-T5	SI DIODE		
D9312	1N4003S-T5	SI DIODE		
D9313	1N4003S-T5	SI DIODE		
C1002	QETN1HM-226Z	E CAPACITOR	22uF 50V M	
C1003	QETN1HM-226Z	E CAPACITOR	22uF 50V M	
C1004	QDYB1CM-103Y	C CAPACITOR	0 01uF 16V M	
C1005	QETN1HM-106Z	E CAPACITOR	10uF 50V M	
C1010	QFLC1HJ-104Z	M CAPACITOR	0.1uF 50V J	
C1011	QFLC1HJ-104Z	M CAPACITOR	0.1uF 50V J	
C1012	QFLC1HJ-104Z	M CAPACITOR	0.1uF 50V J	
C1013	QFKC2EK-104Z	MM CAPACITOR	0.1uF 250V K	
C1014	QFKC2EK-104Z	MM CAPACITOR	0.1uF 250V K	
C1015	QFKC2EK-103Z	MM CAPACITOR	0 01uF 250V K	
C1016	QETN2AM-476Z	E CAPACITOR	47uF 100V M	
C1017	QETN1HM-107Z	E CAPACITOR	100uF 50V M	
C2000	QEZ0706-478	E CAPACITOR	4700uF	
C2004	QEZ0706-478	E CAPACITOR	4700uF	
C2005	QFLC2AJ-103Z	M CAPACITOR	0 01uF 100V J	
C2006	QETM1HM-338	E CAPACITOR	3300uF 50V M	
C2007	QFLC2AJ-103Z	M CAPACITOR	0 01uF 100V J	
C2008	QETM1HM-338	E CAPACITOR	3300uF 50V M	
C2009	QFKC2EK-104Z	MM CAPACITOR	0.1uF 250V K	
C2010	QCBB1HK-103Y	C CAPACITOR	0 01uF 50V K	
C2011	QCBB1HK-221Y	C CAPACITOR	220pF 50V K	
C2012	QETM1CM-478	E CAPACITOR	4700uF 16V M	
C2013	QETM1EM-688	E CAPACITOR	6800uF 25V M	
C9200	QETN1AM-477Z	E CAPACITOR	470uF 10V M	
C9201	QCBB1HK-104Y	C CAPACITOR	0.1uF 50V K	
C9204	QETN1HM-105Z	E CAPACITOR	1uF 50V M	
C9206	QETN1HM-105Z	E CAPACITOR	1uF 50V M	
C9209	QETN1CM-226Z	E CAPACITOR	22uF 16V M	
C9211	QETN1HM-105Z	E CAPACITOR	1uF 50V M	
C9213	QETN1HM-105Z	E CAPACITOR	1uF 50V M	
C9215	QETN1HM-105Z	E CAPACITOR	1uF 50V M	
C9216	QCBB1HK-104Y	C CAPACITOR	0.1uF 50V K	
C9218	QETN0JM-477Z	E CAPACITOR	470uF 6.3V M	
C9221	QETN0JM-477Z	E CAPACITOR	470uF 6.3V M	
C9224	QETN0JM-477Z	E CAPACITOR	470uF 6.3V M	
C9227	QETN0JM-477Z	E CAPACITOR	470uF 6.3V M	
C9230	QETN0JM-477Z	E CAPACITOR	470uF 6.3V M	
C9232	QETN0JM-477Z	E CAPACITOR	470uF 6.3V M	
C9300	QETN0JM-107Z	E CAPACITOR	100uF 6.3V M	
C9303	QETN1CM-107Z	E CAPACITOR	100uF 16V M	
⚠ R1000	QRK126J-470X	UNF C RESISTOR	47Ω 1/2W J	
R1001	QRE141J-753Y	C RESISTOR	75kΩ 1/4W J	
R1002	QRE141J-104Y	C RESISTOR	100kΩ 1/4W J	
R1003	QRE141J-104Y	C RESISTOR	100kΩ 1/4W J	
R1005	QRE141J-753Y	C RESISTOR	75kΩ 1/4W J	
R2000	QRE141J-104Y	C RESISTOR	100kΩ 1/4W J	
R2001	QRE141J-104Y	C RESISTOR	100kΩ 1/4W J	
R2002	QRE141J-104Y	C RESISTOR	100kΩ 1/4W J	
R2003	QRE141J-104Y	C RESISTOR	100kΩ 1/4W J	
R2004	QRE141J-681Y	C RESISTOR	680Ω 1/4W J	
R2005	QRE141J-272Y	C RESISTOR	2.7kΩ 1/4W J	
R2006	QRE141J-681Y	C RESISTOR	680Ω 1/4W J	
R2007	QRE141J-472Y	C RESISTOR	4.7kΩ 1/4W J	
R2008	QRE141J-102Y	C RESISTOR	1kΩ 1/4W J	
R2009	QRE141J-102Y	C RESISTOR	1kΩ 1/4W J	
R2010	QRE141J-102Y	C RESISTOR	1kΩ 1/4W J	
R2011	QRL01DJ-471X	OMF RESISTOR	470Ω 1W J	

⚠ Symbol No.	Part No.	Part Name	Description	Local
R2012	QRL01DJ-471X	OMF RESISTOR	470Ω 1W J	
R2014	QRE141J-273Y	C RESISTOR	27kΩ 1/4W J	
R9201	QRE141J-391Y	C RESISTOR	390Ω 1/4W J	
R9202	QRE141J-391Y	C RESISTOR	390Ω 1/4W J	
R9203	QRE141J-361Y	C RESISTOR	360Ω 1/4W J	
R9204	QRE141J-131Y	C RESISTOR	130Ω 1/4W J	
R9205	QRE141J-361Y	C RESISTOR	360Ω 1/4W J	
R9206	QRE141J-131Y	C RESISTOR	130Ω 1/4W J	
R9207	QRE141J-391Y	C RESISTOR	390Ω 1/4W J	
R9208	QRE141J-391Y	C RESISTOR	390Ω 1/4W J	
R9209	QRE141J-391Y	C RESISTOR	390Ω 1/4W J	
R9210	QRE141J-391Y	C RESISTOR	390Ω 1/4W J	
R9218	QRE141J-750Y	C RESISTOR	75Ω 1/4W J	
R9221	QRE141J-750Y	C RESISTOR	75Ω 1/4W J	
R9224	QRE141J-750Y	C RESISTOR	75Ω 1/4W J	
R9227	QRE141J-750Y	C RESISTOR	75Ω 1/4W J	
R9230	QRE141J-750Y	C RESISTOR	75Ω 1/4W J	
R9232	QRE141J-750Y	C RESISTOR	75Ω 1/4W J	
R9300	QRT017J-2R2	MF RESISTOR	2.2Ω 1W J	
R9301	QRE141J-681Y	C RESISTOR	680Ω 1/4W J	
R9302	QRZ9006-4R7X	F RESISTOR	4.7Ω 1/4W J	
R9303	QRE141J-271Y	C RESISTOR	270Ω 1/4W J	
R9310	QRE141J-470Y	C RESISTOR	47Ω 1/4W J	
CN100	QGA7901C1-02	CONNECTOR	W-B (1-2)	
CN101	QGA7901C1-04	CONNECTOR	W-B (1-4)	
CN102	QGA7901C1-03	CONNECTOR	W-B (1-3)	
CN103	QGA3901F1-08	CONNECTOR	W-B (1-8)	
CN104	QGB2510J1-13	CONNECTOR	B-B (1-13)	
CN105	QGD2503F1-03	CONNECTOR	(1-3)	
CN106	QGA3901F1-03	CONNECTOR	W-B (1-3)	
CN200	QGB2510J1-16	CONNECTOR	B-B (1-16)	
CN201	QGB2510J1-20	CONNECTOR	B-B (1-20)	
CN202	QGD2504C1-03Z	CONNECTOR	(1-3)	
CN203	QGB2510K2-13	CONNECTOR	B-B (1-13)	
CN204	QGB2510K2-13	CONNECTOR	B-B (1-13)	
CN920	QGF1205C1-08	CONNECTOR	FFC/FPC (1-8)	
CN930	QGF1036C1-28	CONNECTOR	FFC/FPC (1-28)	
CN931	QGF1205C1-11	CONNECTOR	FFC/FPC (1-11)	
EP201	E409182-001SM	GRAND TERMINAL		
H2001	GV40577-001A	HEAT SINK		
IH920	GV40397-003A	IC HOLDER		
J920	QNN0624-001	P N JACK		
J921	QNN0557-002	P N JACK		
PP201	QZW0038-001	WIRE CLAMP		
PP202	QZW0038-001	WIRE CLAMP		
⚠ S1000	QSW0812-001	VOLTAGE SWITCH		
Z1001	QNG0003-001Z	FUSE CLIP		
Z1002	QNG0003-001Z	FUSE CLIP		
Z1003	QNG0003-001Z	FUSE CLIP		
Z1004	QNG0003-001Z	FUSE CLIP		
Z1005	QNG0003-001Z	FUSE CLIP		
Z1006	QNG0003-001Z	FUSE CLIP		
Z1007	QNG0003-001Z	FUSE CLIP		
Z1008	QNG0003-001Z	FUSE CLIP		
Z1009	QNG0003-001Z	FUSE CLIP		
Z1010	QNG0003-001Z	FUSE CLIP		
Z1011	QNG0003-001Z	FUSE CLIP		
Z1012	QNG0003-001Z	FUSE CLIP		
Z1013	QNG0003-001Z	FUSE CLIP		
Z1014	QNG0003-001Z	FUSE CLIP		
Z1015	QNG0003-001Z	FUSE CLIP		
Z1016	QNG0003-001Z	FUSE CLIP		
Z1017	QNG0003-001Z	FUSE CLIP		
Z1018	QNG0003-001Z	FUSE CLIP		
Z1019	QNG0003-001Z	FUSE CLIP		
Z1020	QNG0003-001Z	FUSE CLIP		

Amplifier board (DX-T5)

Block No. [0][7]

⚠ Symbol No.	Part No.	Part Name	Description	Local
⚠ IC302	KIA7809API	IC		
⚠ IC303	KIA7805API	IC		
⚠ IC304	KIA7809API	IC		
⚠ IC305	KIA278R05PI	TRANSISTOR		
⚠ IC306	KIA278R09PI	TRANSISTOR		
⚠ IC307	KIA317PI	IC		
IC308	KIA7805API	IC		
⚠ IC401	STK412-430	POWER I.C		
IC500	PT6305	FL DRIVER		
IC510	GP1UM281XKVF	R DETECT UNIT		
⚠ Q3901	KTC3203/OY/-T	TRANSISTOR		
Q3902	KRC102M-T	DIGI TRANSISTOR		
Q4401	KTC3200/GL/-T	TRANSISTOR		
Q4402	KTA1023/OY/-T	TRANSISTOR		
Q4403	KTA1268/GL/-T	TRANSISTOR		
Q4404	KTC1027/OY/-T	TRANSISTOR		
Q4601	KTC3199/GL/-T	TRANSISTOR		
Q4701	KTC3199/GL/-T	TRANSISTOR		
Q4901	KTC1027/OY/-T	TRANSISTOR		
Q4902	KTA1023/OY/-T	TRANSISTOR		
Q4903	KTC3199/GL/-T	TRANSISTOR		
Q4904	KTA1023/OY/-T	TRANSISTOR		
Q5004	KRC102M-T	DIGI TRANSISTOR		
Q5005	KRC102M-T	DIGI TRANSISTOR		
Q5006	KRC102M-T	DIGI TRANSISTOR		
Q5007	KRC102M-T	DIGI TRANSISTOR		
Q5008	KTA1023/OY/-T	TRANSISTOR		
Q5009	KRC102M-T	DIGI TRANSISTOR		
Q5010	KRC110M-T	TRANSISTOR		
Q5011	KTC3199/GL/-T	TRANSISTOR		
D3701	MTZJ5.6C-T2	Z DIODE		
D3811	MTZJ11B-T2	Z DIODE		
D3821	MTZJ11B-T2	Z DIODE		
D3831	1SS119-041-T2	DIODE		
D3832	MTZJ6.2B-T2	Z DIODE		
D3841	MTZJ11B-T2	Z DIODE		
D3901	MTZJ11B-T2	Z DIODE		
D3902	1SS119-041-T2	DIODE		
D4401	1SS119-041-T2	DIODE		
D4501	MTZJ15B-T2	Z DIODE		
D4502	MTZJ15B-T2	Z DIODE		
D4503	MTZJ36A-T2	Z DIODE		
D4504	MTZJ36A-T2	Z DIODE		
D4601	1SS119-041-T2	DIODE		
D4701	1SS119-041-T2	DIODE		
D4901	1SS119-041-T2	DIODE		
D5004	SLI-343URC-W-T	LED		
D5005	SLI-343URC-W-T	LED		
D5006	SLI-343URC3F	LED		
D5007	SLR-343VC-T	LED		
C3701	QETN1EM-476Z	E CAPACITOR	47uF 25V M	
C3702	QETN1CM-107Z	E CAPACITOR	100uF 16V M	
C3811	QETN1EM-476Z	E CAPACITOR	47uF 25V M	
C3812	QETN1CM-107Z	E CAPACITOR	100uF 16V M	
C3821	QETN1EM-476Z	E CAPACITOR	47uF 25V M	
C3822	QETN1CM-107Z	E CAPACITOR	100uF 16V M	
C3831	QETN1EM-476Z	E CAPACITOR	47uF 25V M	
C3832	QETN1CM-107Z	E CAPACITOR	100uF 16V M	
C3841	QETN1EM-476Z	E CAPACITOR	47uF 25V M	
C3842	QETN1CM-107Z	E CAPACITOR	100uF 16V M	
C3851	QETN1EM-476Z	E CAPACITOR	47uF 25V M	
C3852	QETN1CM-107Z	E CAPACITOR	100uF 16V M	
C4401	QETN1AM-107Z	E CAPACITOR	100uF 10V M	
C4402	QFZ0212-104Z	M CAPACITOR	0.1uF	
C4403	QFZ0212-104Z	M CAPACITOR	0.1uF	
C4404	QETN1HM-105Z	E CAPACITOR	1uF 50V M	
C4602	QCSB1HK-4R7Y	C CAPACITOR	4.7pF 50V K	
C4603	QETN1JM-476Z	E CAPACITOR	47uF 63V M	
C4604	QFLC1HJ-104Z	M CAPACITOR	0.1uF 50V J	
C4605	QFLC1HJ-104Z	M CAPACITOR	0.1uF 50V J	
C4702	QCSB1HK-4R7Y	C CAPACITOR	4.7pF 50V K	

⚠ Symbol No.	Part No.	Part Name	Descrip ion	Local
C4703	QETN1JM-476Z	E CAPACITOR	47uF 63V M	
C4704	QFLC1HJ-104Z	M CAPACITOR	0.1uF 50V J	
C4705	QFLC1HJ-104Z	M CAPACITOR	0.1uF 50V J	
C4801	QCBB1HK-221Y	C CAPACITOR	220pF 50V K	
C4802	QTE1V06-106Z	E CAPACITOR	10uF 35V	
C4803	QCBB1HK-101Y	C CAPACITOR	100pF 50V K	
C4811	QCBB1HK-221Y	C CAPACITOR	220pF 50V K	
C4812	QTE1V06-106Z	E CAPACITOR	10uF 35V	
C4813	QCBB1HK-101Y	C CAPACITOR	100pF 50V K	
C4901	QETN1HM-106Z	E CAPACITOR	10uF 50V M	
C4902	QETN1CM-476Z	E CAPACITOR	47uF 16V M	
C4903	QETN1HM-106Z	E CAPACITOR	10uF 50V M	
C5000	QETN1HM-226Z	E CAPACITOR	22uF 50V M	
C5001	QETN1HM-226Z	E CAPACITOR	22uF 50V M	
C5002	QDGB1HK-102Y	C CAPACITOR	1000pF 50V K	
C5003	QEKC1EM-106Z	E CAPACITOR	10uF 25V M	
C5004	QCBB1HK-104Y	C CAPACITOR	0.1uF 50V K	
C5005	QCBB1HK-101Y	C CAPACITOR	100pF 50V K	
C5006	QEKC1AM-107Z	E CAPACITOR	100uF 10V M	
C5007	QCBB1HK-104Y	C CAPACITOR	0.1uF 50V K	
R3701	QRE141J-103Y	C RESISTOR	10kΩ 1/4W J	
R3831	QRE141J-102Y	C RESISTOR	1kΩ 1/4W J	
R3901	QRJ146J-4R7X	UNF C RESISTOR	4.7Ω 1/4W J	
R3902	QRE141J-242Y	C RESISTOR	2.4kΩ 1/4W J	
R3903	QRE141J-100Y	C RESISTOR	10Ω 1/4W J	
R3904	QRE141J-271Y	C RESISTOR	270Ω 1/4W J	
R3905	QRE141J-242Y	C RESISTOR	2.4kΩ 1/4W J	
R3906	QRE141J-103Y	C RESISTOR	10kΩ 1/4W J	
R3907	QRE141J-102Y	C RESISTOR	1kΩ 1/4W J	
R3908	QRE141J-103Y	C RESISTOR	10kΩ 1/4W J	
R4401	QRE141J-222Y	C RESISTOR	2.2kΩ 1/4W J	
R4402	QRE141J-104Y	C RESISTOR	100kΩ 1/4W J	
R4403	QRE141J-103Y	C RESISTOR	10kΩ 1/4W J	
R4404	QRE141J-103Y	C RESISTOR	10kΩ 1/4W J	
⚠ R4405	QRJ146J-470X	UNF C RESISTOR	47Ω 1/4W J	
R4406	QRE141J-103Y	C RESISTOR	10kΩ 1/4W J	
R4407	QRE141J-103Y	C RESISTOR	10kΩ 1/4W J	
⚠ R4408	QRJ146J-470X	UNF C RESISTOR	47Ω 1/4W J	
R4501	QRE141J-682Y	C RESISTOR	6.8kΩ 1/4W J	
R4502	QRE141J-682Y	C RESISTOR	6.8kΩ 1/4W J	
R4503	QRE141J-682Y	C RESISTOR	6.8kΩ 1/4W J	
R4504	QRE141J-682Y	C RESISTOR	6.8kΩ 1/4W J	
⚠ R4505	QRJ146J-100X	UNF C RESISTOR	10Ω 1/4W J	
R4506	QRE141J-333Y	C RESISTOR	33kΩ 1/4W J	
⚠ R4601	QRZ0224-R22	EMIT RESISTOR	0.22Ω	
R4602	QRE141J-563Y	C RESISTOR	56kΩ 1/4W J	
⚠ R4603	QRJ146J-100X	UNF C RESISTOR	10Ω 1/4W J	
R4604	QRJ146J-100X	UNF C RESISTOR	10Ω 1/4W J	
R4605	QRE141J-102Y	C RESISTOR	1kΩ 1/4W J	
R4606	QRE141J-102Y	C RESISTOR	1kΩ 1/4W J	
R4607	QRE141J-473Y	C RESISTOR	47kΩ 1/4W J	
R4608	QRE141J-562Y	C RESISTOR	5.6kΩ 1/4W J	
⚠ R4609	QRJ146J-821X	UNF C RESISTOR	820Ω 1/4W J	
R4610	QRE141J-104Y	C RESISTOR	100kΩ 1/4W J	
⚠ R4701	QRZ0224-R22	EMIT RESISTOR	0.22Ω	
R4702	QRE141J-563Y	C RESISTOR	56kΩ 1/4W J	
⚠ R4703	QRJ146J-100X	UNF C RESISTOR	10Ω 1/4W J	
⚠ R4704	QRJ146J-100X	UNF C RESISTOR	10Ω 1/4W J	
R4705	QRE141J-102Y	C RESISTOR	1kΩ 1/4W J	
R4706	QRE141J-102Y	C RESISTOR	1kΩ 1/4W J	
R4707	QRE141J-473Y	C RESISTOR	47kΩ 1/4W J	
R4708	QRE141J-562Y	C RESISTOR	5.6kΩ 1/4W J	
⚠ R4709	QRJ146J-821X	UNF C RESISTOR	820Ω 1/4W J	
R4710	QRE141J-104Y	C RESISTOR	100kΩ 1/4W J	
R4801	QRE141J-102Y	C RESISTOR	1kΩ 1/4W J	
R4802	QRE141J-563Y	C RESISTOR	56kΩ 1/4W J	
R4811	QRE141J-102Y	C RESISTOR	1kΩ 1/4W J	
R4812	QRE141J-563Y	C RESISTOR	56kΩ 1/4W J	
R4901	QRE141J-103Y	C RESISTOR	10kΩ 1/4W J	
R4902	QRE141J-104Y	C RESISTOR	100kΩ 1/4W J	
R4903	QRE141J-103Y	C RESISTOR	10kΩ 1/4W J	
R4904	QRE141J-104Y	C RESISTOR	100kΩ 1/4W J	
R4905	QRE141J-103Y	C RESISTOR	10kΩ 1/4W J	
R4906	QRE141J-104Y	C RESISTOR	100kΩ 1/4W J	
R5000	QRE141J-102Y	C RESISTOR	1kΩ 1/4W J	
R5001	QRE141J-102Y	C RESISTOR	1kΩ 1/4W J	
R5002	QRE141J-122Y	C RESISTOR	1.2kΩ 1/4W J	

⚠ Symbol No.	Part No.	Part Name	Descrip ion	Local
R5003	QRE141J-152Y	C RESISTOR	1 5kΩ 1/4W J	
R5004	QRE141J-222Y	C RESISTOR	2 2kΩ 1/4W J	
R5005	QRE141J-272Y	C RESISTOR	2.7kΩ 1/4W J	
R5006	QRE141J-392Y	C RESISTOR	3 9kΩ 1/4W J	
R5007	QRE141J-562Y	C RESISTOR	5.6kΩ 1/4W J	
R5008	QRE141J-103Y	C RESISTOR	10kΩ 1/4W J	
R5009	QRE141J-102Y	C RESISTOR	1kΩ 1/4W J	
R5010	QRE141J-102Y	C RESISTOR	1kΩ 1/4W J	
R5011	QRE141J-122Y	C RESISTOR	1 2kΩ 1/4W J	
R5012	QRE141J-152Y	C RESISTOR	1 5kΩ 1/4W J	
R5013	QRE141J-222Y	C RESISTOR	2 2kΩ 1/4W J	
R5014	QRE141J-272Y	C RESISTOR	2.7kΩ 1/4W J	
R5015	QRE141J-392Y	C RESISTOR	3 9kΩ 1/4W J	
R5016	QRE141J-102Y	C RESISTOR	1kΩ 1/4W J	
R5017	QRE141J-102Y	C RESISTOR	1kΩ 1/4W J	
R5018	QRE141J-122Y	C RESISTOR	1 2kΩ 1/4W J	
R5019	QRE141J-152Y	C RESISTOR	1 5kΩ 1/4W J	
R5020	QRE141J-222Y	C RESISTOR	2 2kΩ 1/4W J	
R5021	QRE141J-272Y	C RESISTOR	2.7kΩ 1/4W J	
R5022	QRE141J-392Y	C RESISTOR	3 9kΩ 1/4W J	
R5023	QRE141J-562Y	C RESISTOR	5.6kΩ 1/4W J	
R5024	QRE141J-102Y	C RESISTOR	1kΩ 1/4W J	
R5025	QRE141J-102Y	C RESISTOR	1kΩ 1/4W J	
R5026	QRE141J-122Y	C RESISTOR	1 2kΩ 1/4W J	
R5027	QRE141J-152Y	C RESISTOR	1 5kΩ 1/4W J	
R5028	QRE141J-222Y	C RESISTOR	2 2kΩ 1/4W J	
R5029	QRE141J-272Y	C RESISTOR	2.7kΩ 1/4W J	
R5030	QRE141J-392Y	C RESISTOR	3 9kΩ 1/4W J	
R5035	QRE141J-161Y	C RESISTOR	160Ω 1/4W J	
R5036	QRE141J-161Y	C RESISTOR	160Ω 1/4W J	
R5037	QRE141J-131Y	C RESISTOR	130Ω 1/4W J	
R5038	QRE141J-102Y	C RESISTOR	1kΩ 1/4W J	
R5039	QRE141J-102Y	C RESISTOR	1kΩ 1/4W J	
R5040	QRE141J-102Y	C RESISTOR	1kΩ 1/4W J	
R5041	QRE141J-102Y	C RESISTOR	1kΩ 1/4W J	
R5042	QRE141J-103Y	C RESISTOR	10kΩ 1/4W J	
R5043	QRE141J-271Y	C RESISTOR	270Ω 1/4W J	
R5044	QRE141J-821Y	C RESISTOR	820Ω 1/4W J	
R5045	QRE141J-104Y	C RESISTOR	100kΩ 1/4W J	
R5046	QRE141J-104Y	C RESISTOR	100kΩ 1/4W J	
L4601	QQLZ035-R39	COIL	0.39uH	
L4701	QQLZ035-R39	COIL	0.39uH	
CN301	QGB2510K2-09	CONNECTOR	B-B (1-9)	
CN302	QGF1205C1-13	CONNECTOR	FFC/FPC (1-13)	
CN303	QGF1205F1-11	CONNECTOR	FFC/FPC (1-11)	
CN304	QGA2501F1-03	CONNECTOR	W-B (1-3)	
CN401	QGB2510K2-12	CONNECTOR	B-B (1-12)	
CN402	QGF1205C1-08	CONNECTOR	FFC/FPC (1-8)	
CN500	QGF1036F1-19	CONNECTOR	FFC/FPC (1-19)	
FL500	QLF0150-001	FL TUBE		
FW401	QUM154-10Z4Z4-E	FLAT WIRE		
FW500	QUM153-18DGZ4-E	FLAT WIRE		
S5000	QSW1121-001Z	PUSH SW I.M		
S5001	QSW1121-001Z	PUSH SW I.M		
S5002	QSW1121-001Z	PUSH SW I.M		
S5003	QSW1121-001Z	PUSH SW I.M		
S5004	QSW1121-001Z	PUSH SW I.M		
S5005	QSW1121-001Z	PUSH SW I.M		
S5006	QSW1121-001Z	PUSH SW I.M		
S5007	QSW1121-001Z	PUSH SW I.M		
S5008	QSW1121-001Z	PUSH SW I.M		
S5009	QSW1121-001Z	PUSH SW I.M		
S5010	QSW1121-001Z	PUSH SW I.M		
S5011	QSW1121-001Z	PUSH SW I.M		
S5012	QSW1121-001Z	PUSH SW I.M		
S5013	QSW1121-001Z	PUSH SW I.M		
S5014	QSW1121-001Z	PUSH SW I.M		
S5015	QSW1121-001Z	PUSH SW I.M		
S5016	QSW1121-001Z	PUSH SW I.M		
S5017	QSW1121-001Z	PUSH SW I.M		
S5018	QSW1121-001Z	PUSH SW I.M		
S5019	QSW1121-001Z	PUSH SW I.M		
S5020	QSW1121-001Z	PUSH SW I.M		
S5021	QSW1121-001Z	PUSH SW I.M		
S5022	QSW1121-001Z	PUSH SW I.M		
S5023	QSW1121-001Z	PUSH SW I.M		

⚠ Symbol No.	Part No.	Part Name	Description	Local
S5024	QSW1121-001Z	PUSH SW I M		
S5025	QSW1121-001Z	PUSH SW I M		
S5026	QSW1121-001Z	PUSH SW I M		
S5027	QSW1121-001Z	PUSH SW I M		
S5028	QSW1121-001Z	PUSH SW I M		
S5029	QSW1121-001Z	PUSH SW I M		
S5030	QSW1121-001Z	PUSH SW I M		
S5031	QSW1121-001Z	PUSH SW I M		
S5032	QSW1121-001Z	PUSH SW I M		
S5033	QSW1121-001Z	PUSH SW I M		
S5034	QSW1121-001Z	PUSH SW I M		
SP500	GV40205-004A	IC HOLDER		

Main board (DX-T5)

Block No. [0][8]

⚠ Symbol No.	Part No.	Part Name	Description	Local
IC760	SN74AHCT08NS-X	IC		
IC770	MN101C49GFS1	MASK ROM		
IC771	BR24L02F-W-X	IC		
IC810	CD4066BM-X	IC		
IC820	LC75342M-X	IC		
IC830	RC4558D-X	IC		
IC850	M65851FP	IC		
IC860	JCV8011-X	IC		
IC881	RC4558D-X	IC		
IC901	RC4580 D-X	IC		
Q7000	KTC3199/GL/-T	TRANSISTOR		
Q7010	KTC3199/GL/-T	TRANSISTOR		
Q7080	KRC107S-X	DIGI TRANSISTOR		
Q7081	KRC111S-X	TRANSISTOR		
Q7788	KRA102S-X	DIGI TRANSISTOR		
Q7798	KRA102S-X	DIGI TRANSISTOR		
Q8000	2SD2114K/VW/-X	TRANSISTOR		
Q8030	KTC3875/YG/-X	SI TRANSISTOR		
Q8031	KTC3875/YG/-X	SI TRANSISTOR		
Q8032	KTC3875/YG/-X	SI TRANSISTOR		
Q8037	KTC3875/YG/-X	SI TRANSISTOR		
Q8038	KTC3875/YG/-X	SI TRANSISTOR		
Q8040	2SD2114K/VW/-X	TRANSISTOR		
Q8100	2SD2114K/VW/-X	TRANSISTOR		
Q8130	KTC3875/YG/-X	SI TRANSISTOR		
Q8131	KTC3875/YG/-X	SI TRANSISTOR		
Q8132	KTC3875/YG/-X	SI TRANSISTOR		
Q8137	KTC3875/YG/-X	SI TRANSISTOR		
Q8138	KTC3875/YG/-X	SI TRANSISTOR		
Q8140	2SD2114K/VW/-X	TRANSISTOR		
Q8211	KRC104S-X	TRANSISTOR		
Q8212	KRC104S-X	TRANSISTOR		
Q8260	KTC3199/GL/-T	TRANSISTOR		
Q8524	KTC1027/OY/-T	TRANSISTOR		
Q8900	KRA104S-X	DIGI TRANSISTOR		
Q8910	2SD1328/ST/-X	TRANSISTOR		
Q8911	2SD1328/ST/-X	TRANSISTOR		
Q9001	2SD2114K/VW/-X	TRANSISTOR		
Q9002	2SD2114K/VW/-X	TRANSISTOR		
Q9003	KRC111S-X	TRANSISTOR		
Q9004	KTA1504/YG/-X	SI TRANSISTOR		
Q9100	KRA111S-X	D. TRANSISTOR		
Q9101	2SD2114K/VW/-X	TRANSISTOR		
Q9102	2SD2114K/VW/-X	TRANSISTOR		
Q9103	2SD2114K/VW/-X	TRANSISTOR		
Q9104	2SD2114K/VW/-X	TRANSISTOR		
D7000	1SS133-T2	SI DIODE		
D7010	1SS133-T2	SI DIODE		
D7050	MTZJ5.1B-T2	Z DIODE		
D7080	1SS133-T2	SI DIODE		
D7081	MTZJ4.7B-T2	Z DIODE		
D7082	1SS133-T2	SI DIODE		
D7151	1SS133-T2	SI DIODE		
D7152	1SS133-T2	SI DIODE		

⚠ Symbol No.	Part No.	Part Name	Description	Local
D7390	1SS133-T2	SI DIODE		
D7711	1SS133-T2	SI DIODE		
D7713	1N4003S-T5	SI DIODE		
D7784	MTZJ3.9B-T2	Z DIODE		
D7785	MTZJ3.9B-T2	Z DIODE		
D8230	1SS133-T2	SI DIODE		
D8524	MTZJ5.6B-T2	Z DIODE		
D8900	1SS133-T2	SI DIODE		
D8901	1SS133-T2	SI DIODE		
D9001	1SS133-T2	SI DIODE		
D9002	1SS133-T2	SI DIODE		
D9100	MTZJ2.4B-T2	Z DIODE		
C7001	QETN1HM-476Z	E CAPACITOR	47uF 50V M	
C7002	QETN1HM-476Z	E CAPACITOR	47uF 50V M	
C7050	QETN1HM-475Z	E CAPACITOR	4.7uF 50V M	
C7080	NCB31HK-102X	C CAPACITOR	1000pF 50V K	
C7082	QETN1HM-475Z	E CAPACITOR	4.7uF 50V M	
C7083	NCB31HK-103X	C CAPACITOR	0.01uF 50V K	
C7084	QETN0JM-227Z	E CAPACITOR	220uF 6.3V M	
C7085	QETN0JM-108Z	E CAPACITOR	1000uF 6.3V M	
C7710	QCBB1HK-103Y	C CAPACITOR	0.01uF 50V K	
C7711	QETN1CM-107Z	E CAPACITOR	100uF 16V M	
C7712	NCS31HJ-180X	C CAPACITOR	18pF 50V J	
C7713	NCS31HJ-180X	C CAPACITOR	18pF 50V J	
C7788	QETN1HM-106Z	E CAPACITOR	10uF 50V M	
C7798	QETN1HM-106Z	E CAPACITOR	10uF 50V M	
C8001	QTE1V06-106Z	E CAPACITOR	10uF 35V	
C8002	QTE1V06-106Z	E CAPACITOR	10uF 35V	
C8020	QETN1HM-475Z	E CAPACITOR	4.7uF 50V M	
C8021	QETN1HM-475Z	E CAPACITOR	4.7uF 50V M	
C8022	QETN1HM-475Z	E CAPACITOR	4.7uF 50V M	
C8023	QETN1HM-475Z	E CAPACITOR	4.7uF 50V M	
C8025	QTE1H28-106Z	E CAPACITOR	10uF 50V	
C8026	QFLC1HJ-272Z	M CAPACITOR	2700pF 50V J	
C8027	QFLC1HJ-104Z	M CAPACITOR	0.1uF 50V J	
C8028	QFLC1HJ-104Z	M CAPACITOR	0.1uF 50V J	
C8030	QFVF1HJ-154Z	MF CAPACITOR	0.15uF 50V J	
C8031	QFVF1HJ-124Z	MF CAPACITOR	0.12uF 50V J	
C8032	QTE1C06-226Z	E CAPACITOR	22uF 16V	
C8062	QTE1V06-106Z	E CAPACITOR	10uF 35V	
C8101	QTE1V06-106Z	E CAPACITOR	10uF 35V	
C8102	QTE1V06-106Z	E CAPACITOR	10uF 35V	
C8120	QETN1HM-475Z	E CAPACITOR	4.7uF 50V M	
C8121	QETN1HM-475Z	E CAPACITOR	4.7uF 50V M	
C8122	QETN1HM-475Z	E CAPACITOR	4.7uF 50V M	
C8123	QETN1HM-475Z	E CAPACITOR	4.7uF 50V M	
C8125	QTE1H28-106Z	E CAPACITOR	10uF 50V	
C8126	QFLC1HJ-272Z	M CAPACITOR	2700pF 50V J	
C8127	QFLC1HJ-104Z	M CAPACITOR	0.1uF 50V J	
C8128	QFLC1HJ-104Z	M CAPACITOR	0.1uF 50V J	
C8130	QFVF1HJ-154Z	MF CAPACITOR	0.15uF 50V J	
C8131	QFVF1HJ-124Z	MF CAPACITOR	0.12uF 50V J	
C8132	QTE1C06-226Z	E CAPACITOR	22uF 16V	
C8162	QTE1V06-106Z	E CAPACITOR	10uF 35V	
C8182	QFLC1HJ-471Z	M CAPACITOR	470pF 50V J	
C8221	QCBB1HK-103Y	C CAPACITOR	0.01uF 50V K	
C8222	QTE1C06-107Z	E CAPACITOR	100uF 16V	
C8230	QETN1EM-476Z	E CAPACITOR	47uF 25V M	
C8232	QETN1HM-105Z	E CAPACITOR	1uF 50V M	
C8233	QFLC1HJ-683Z	M CAPACITOR	0.068uF 50V J	
C8261	QETN1EM-476Z	E CAPACITOR	47uF 25V M	
C8262	QFLC1HJ-223Z	M CAPACITOR	0.022uF 50V J	
C8263	QETN1HM-225Z	E CAPACITOR	2.2uF 50V M	
C8264	QETN1HM-106Z	E CAPACITOR	10uF 50V M	
C8265	QETN1HM-106Z	E CAPACITOR	10uF 50V M	
C8266	QETN1HM-475Z	E CAPACITOR	4.7uF 50V M	
C8267	QETN1EM-336Z	E CAPACITOR	33uF 25V M	
C8268	QETN1HM-224Z	E CAPACITOR	0.22uF 50V M	
C8269	QETN1HM-225Z	E CAPACITOR	2.2uF 50V M	
C8360	QETN1HM-475Z	E CAPACITOR	4.7uF 50V M	
C8361	QETN1HM-475Z	E CAPACITOR	4.7uF 50V M	
C8362	QETN1HM-474Z	E CAPACITOR	0.47uF 50V M	
C8363	QETN1EM-476Z	E CAPACITOR	47uF 25V M	
C8501	QFLC1HJ-152Z	M CAPACITOR	1500pF 50V J	
C8503	QFLC1HJ-154Z	M CAPACITOR	0.15uF 50V J	
C8504	QFLC1HJ-152Z	M CAPACITOR	1500pF 50V J	
C8506	QETN1HM-225Z	E CAPACITOR	2.2uF 50V M	

⚠ Symbol No.	Part No.	Part Name	Descrip ion	Local
C8508	QFLC1HJ-102Z	M CAPACITOR	1000pF 50V J	
C8509	QFLC1HJ-332Z	M CAPACITOR	3300pF 50V J	
C8512	QETN1HM-225Z	E CAPACITOR	2.2uF 50V M	
C8513	QETN1HM-105Z	E CAPACITOR	1uF 50V M	
C8514	QFLC1HJ-102Z	M CAPACITOR	1000pF 50V J	
C8515	QFLC1HJ-472Z	M CAPACITOR	4700pF 50V J	
C8516	QFLC1HJ-683Z	M CAPACITOR	0.068uF 50V J	
C8517	QFLC1HJ-104Z	M CAPACITOR	0.1uF 50V J	
C8518	QFLC1HJ-104Z	M CAPACITOR	0.1uF 50V J	
C8520	QFLC1HJ-683Z	M CAPACITOR	0.068uF 50V J	
C8522	QETN1EM-476Z	E CAPACITOR	47uF 25V M	
C8523	QFLC1HJ-104Z	M CAPACITOR	0.1uF 50V J	
C8524	QETN1CM-107Z	E CAPACITOR	100uF 16V M	
C8525	QETN1CM-107Z	E CAPACITOR	100uF 16V M	
C8530	QFLC1HJ-104Z	M CAPACITOR	0.1uF 50V J	
C8540	QFLC1HJ-102Z	M CAPACITOR	1000pF 50V J	
C8541	QFLC1HJ-472Z	M CAPACITOR	4700pF 50V J	
C8542	QFLC1HJ-683Z	M CAPACITOR	0.068uF 50V J	
C8544	QFLC1HJ-104Z	M CAPACITOR	0.1uF 50V J	
C8545	QFLC1HJ-104Z	M CAPACITOR	0.1uF 50V J	
C8546	QFLC1HJ-683Z	M CAPACITOR	0.068uF 50V J	
C8548	QFLC1HJ-102Z	M CAPACITOR	1000pF 50V J	
C8550	QFLC1HJ-472Z	M CAPACITOR	4700pF 50V J	
C8552	QFVF1HJ-224Z	MF CAPACITOR	0.22uF 50V J	
C8554	QFLC1HJ-104Z	M CAPACITOR	0.1uF 50V J	
C8555	QETN1CM-107Z	E CAPACITOR	100uF 16V M	
C8563	QTE1V06-106Z	E CAPACITOR	10uF 35V	
C8564	QTE1V06-106Z	E CAPACITOR	10uF 35V	
C8574	QTE1V06-106Z	E CAPACITOR	10uF 35V	
C8575	QTE1V06-106Z	E CAPACITOR	10uF 35V	
C8576	QFLC1HJ-154Z	M CAPACITOR	0.15uF 50V J	
C8577	QETN1HM-104Z	E CAPACITOR	0.1uF 50V M	
C8578	QETN1HM-105Z	E CAPACITOR	1uF 50V M	
C8579	QETN1HM-105Z	E CAPACITOR	1uF 50V M	
C8580	QFLC1HJ-154Z	M CAPACITOR	0.15uF 50V J	
C8900	QETN1HM-105Z	E CAPACITOR	1uF 50V M	
C8910	QETN1HM-226Z	E CAPACITOR	22uF 50V M	
C9000	NCB21HK-473X	C CAPACITOR	0.047uF 50V K	
C9001	QETN1HM-104Z	E CAPACITOR	0.1uF 50V M	
C9002	NCS31HJ-681X	C CAPACITOR	680pF 50V J	
C9003	QEKC1HM-105Z	E CAPACITOR	1uF 50V M	
C9004	QEKC1HM-104Z	E CAPACITOR	0.1uF 50V M	
C9005	QEKC1HM-335Z	E CAPACITOR	3.3uF 50V M	
C9006	QETN1EM-336Z	E CAPACITOR	33uF 25V M	
C9007	QEKC1HM-104Z	E CAPACITOR	0.1uF 50V M	
C9008	QETN1HM-104Z	E CAPACITOR	0.1uF 50V M	
C9009	QETN1EM-476Z	E CAPACITOR	47uF 25V M	
C9010	QEKC1CM-107Z	E CAPACITOR	100uF 16V M	
C9021	NCB31HK-102X	C CAPACITOR	1000pF 50V K	
C9022	NCB31HK-102X	C CAPACITOR	1000pF 50V K	
C9100	QDGB1HK-102Y	C CAPACITOR	1000pF 50V K	
C9101	QDGB1HK-102Y	C CAPACITOR	1000pF 50V K	
C9102	QDGB1HK-102Y	C CAPACITOR	1000pF 50V K	
C9103	QDXB1CM-392Y	C CAPACITOR	3900pF 16V M	
C9104	QDXB1CM-392Y	C CAPACITOR	3900pF 16V M	
C9105	QDGB1HK-102Y	C CAPACITOR	1000pF 50V K	
R7000	QRE141J-222Y	C RESISTOR	2.2kΩ 1/4W J	
R7001	QRL01DJ-151X	OMF RESISTOR	150Ω 1W J	
R7002	QRL01DJ-151X	OMF RESISTOR	150Ω 1W J	
R7003	QRL01DJ-151X	OMF RESISTOR	150Ω 1W J	
R7010	QRE141J-222Y	C RESISTOR	2.2kΩ 1/4W J	
R7011	QRL01DJ-151X	OMF RESISTOR	150Ω 1W J	
R7012	QRL01DJ-151X	OMF RESISTOR	150Ω 1W J	
R7013	QRL01DJ-151X	OMF RESISTOR	150Ω 1W J	
R7050	QRE141J-563Y	C RESISTOR	56kΩ 1/4W J	
R7080	NRSA63J-223X	MG RESISTOR	22kΩ 1/16W J	
R7081	NRSA63J-103X	MG RESISTOR	10kΩ 1/16W J	
R7082	NRSA63J-102X	MG RESISTOR	1kΩ 1/16W J	
R7083	NRSA63J-222X	MG RESISTOR	2.2kΩ 1/16W J	
R7084	NRSA63J-681X	MG RESISTOR	680Ω 1/16W J	
R7085	NRSA63J-681X	MG RESISTOR	680Ω 1/16W J	
R7151	QRE141J-123Y	C RESISTOR	12kΩ 1/4W J	
R7152	QRE141J-123Y	C RESISTOR	12kΩ 1/4W J	
R7200	NRSA63J-273X	MG RESISTOR	27kΩ 1/16W J	
R7251	QRE141J-242Y	C RESISTOR	2.4kΩ 1/4W J	
R7252	QRE141J-242Y	C RESISTOR	2.4kΩ 1/4W J	
R7702	NRSA63J-222X	MG RESISTOR	2.2kΩ 1/16W J	

⚠ Symbol No.	Part No.	Part Name	Descrip ion	Local
R7703	NRSA63J-102X	MG RESISTOR	1kΩ 1/16W J	
R7704	NRSA63J-102X	MG RESISTOR	1kΩ 1/16W J	
R7705	NRSA63J-102X	MG RESISTOR	1kΩ 1/16W J	
R7706	NRSA63J-102X	MG RESISTOR	1kΩ 1/16W J	
R7707	NRSA63J-222X	MG RESISTOR	2 2kΩ 1/16W J	
R7708	NRSA63J-222X	MG RESISTOR	2 2kΩ 1/16W J	
R7709	NRSA63J-103X	MG RESISTOR	10kΩ 1/16W J	
R7715	NRSA63J-103X	MG RESISTOR	10kΩ 1/16W J	
R7717	NRSA63J-103X	MG RESISTOR	10kΩ 1/16W J	
R7718	QRE141J-102Y	C RESISTOR	1kΩ 1/4W J	
R7719	QRE141J-102Y	C RESISTOR	1kΩ 1/4W J	
R7720	QRE141J-102Y	C RESISTOR	1kΩ 1/4W J	
R7721	NRSA63J-122X	MG RESISTOR	1 2kΩ 1/16W J	
R7722	NRSA63J-122X	MG RESISTOR	1 2kΩ 1/16W J	
R7723	NRSA63J-122X	MG RESISTOR	1 2kΩ 1/16W J	
R7724	NRSA63J-122X	MG RESISTOR	1 2kΩ 1/16W J	
R7725	NRSA63J-122X	MG RESISTOR	1 2kΩ 1/16W J	
R7726	NRSA63J-101X	MG RESISTOR	100Ω 1/16W J	
R7728	NRSA63J-222X	MG RESISTOR	2 2kΩ 1/16W J	
R7731	NRSA63J-222X	MG RESISTOR	2 2kΩ 1/16W J	
R7732	NRSA63J-103X	MG RESISTOR	10kΩ 1/16W J	
R7735	NRSA63J-102X	MG RESISTOR	1kΩ 1/16W J	
R7737	NRSA63J-102X	MG RESISTOR	1kΩ 1/16W J	
R7738	NRSA63J-102X	MG RESISTOR	1kΩ 1/16W J	
R7739	NRSA63J-102X	MG RESISTOR	1kΩ 1/16W J	
R7740	NRSA63J-102X	MG RESISTOR	1kΩ 1/16W J	
R7742	NRSA63J-102X	MG RESISTOR	1kΩ 1/16W J	
R7743	NRSA63J-102X	MG RESISTOR	1kΩ 1/16W J	
R7744	NRSA63J-102X	MG RESISTOR	1kΩ 1/16W J	
R7745	NRSA63J-103X	MG RESISTOR	10kΩ 1/16W J	
R7746	NRSA63J-102X	MG RESISTOR	1kΩ 1/16W J	
R7747	NRSA63J-0R0X	MG RESISTOR	0Ω 1/16W J	
R7748	NRSA63J-102X	MG RESISTOR	1kΩ 1/16W J	
R7749	NRSA63J-102X	MG RESISTOR	1kΩ 1/16W J	
R7751	QRE141J-222Y	C RESISTOR	2 2kΩ 1/4W J	
R7752	QRE141J-222Y	C RESISTOR	2 2kΩ 1/4W J	
R7756	NRSA63J-102X	MG RESISTOR	1kΩ 1/16W J	
R7759	NRSA63J-222X	MG RESISTOR	2 2kΩ 1/16W J	
R7760	NRSA63J-222X	MG RESISTOR	2 2kΩ 1/16W J	
R7761	NRSA63J-222X	MG RESISTOR	2 2kΩ 1/16W J	
R7762	NRSA63J-222X	MG RESISTOR	2 2kΩ 1/16W J	
R7763	NRSA63J-102X	MG RESISTOR	1kΩ 1/16W J	
R7764	NRSA63J-102X	MG RESISTOR	1kΩ 1/16W J	
R7765	NRSA63J-0R0X	MG RESISTOR	0Ω 1/16W J	
R7766	NRSA63J-0R0X	MG RESISTOR	0Ω 1/16W J	
R7767	NRSA63J-222X	MG RESISTOR	2 2kΩ 1/16W J	
R7768	NRSA63J-222X	MG RESISTOR	2 2kΩ 1/16W J	
R7769	NRSA63J-102X	MG RESISTOR	1kΩ 1/16W J	
R7770	NRSA63J-102X	MG RESISTOR	1kΩ 1/16W J	
R7771	QRE141J-104Y	C RESISTOR	100kΩ 1/4W J	
R7772	QRE141J-222Y	C RESISTOR	2 2kΩ 1/4W J	
R7773	QRE141J-222Y	C RESISTOR	2 2kΩ 1/4W J	
R7774	QRE141J-102Y	C RESISTOR	1kΩ 1/4W J	
R7775	NRSA63J-222X	MG RESISTOR	2 2kΩ 1/16W J	
R7776	NRSA63J-222X	MG RESISTOR	2 2kΩ 1/16W J	
R7777	NRSA63J-102X	MG RESISTOR	1kΩ 1/16W J	
R7778	NRSA63J-222X	MG RESISTOR	2 2kΩ 1/16W J	
R7779	NRSA63J-222X	MG RESISTOR	2 2kΩ 1/16W J	
R7780	NRSA63J-222X	MG RESISTOR	2 2kΩ 1/16W J	
R7781	NRSA63J-222X	MG RESISTOR	2 2kΩ 1/16W J	
R7786	NRSA63J-222X	MG RESISTOR	2 2kΩ 1/16W J	
R7788	NRSA63J-222X	MG RESISTOR	2 2kΩ 1/16W J	
R7789	NRSA63J-222X	MG RESISTOR	2 2kΩ 1/16W J	
R7790	NRSA63J-102X	MG RESISTOR	1kΩ 1/16W J	
R7791	NRSA63J-102X	MG RESISTOR	1kΩ 1/16W J	
R7792	NRSA63J-102X	MG RESISTOR	1kΩ 1/16W J	
R7796	NRSA63J-222X	MG RESISTOR	2 2kΩ 1/16W J	
R7797	NRSA63J-102X	MG RESISTOR	1kΩ 1/16W J	
R7798	NRSA63J-102X	MG RESISTOR	1kΩ 1/16W J	
R7799	NRSA63J-103X	MG RESISTOR	10kΩ 1/16W J	
R7803	NRSA63J-103X	MG RESISTOR	10kΩ 1/16W J	
R7804	NRSA63J-103X	MG RESISTOR	10kΩ 1/16W J	
R7805	NRSA63J-103X	MG RESISTOR	10kΩ 1/16W J	
R7806	NRSA63J-103X	MG RESISTOR	10kΩ 1/16W J	
R7807	NRSA63J-103X	MG RESISTOR	10kΩ 1/16W J	
R7808	NRSA63J-103X	MG RESISTOR	10kΩ 1/16W J	
R7809	NRSA63J-273X	MG RESISTOR	27kΩ 1/16W J	UW
R7809	NRSA63J-153X	MG RESISTOR	15kΩ 1/16W J	UG,UX

⚠ Symbol No.	Part No.	Part Name	Description	Local
R7809	NRSA63J-332X	MG RESISTOR	3.3kΩ 1/16W J	UY
R7821	NRSA63J-222X	MG RESISTOR	2.2kΩ 1/16W J	
R7823	NRSA63J-222X	MG RESISTOR	2.2kΩ 1/16W J	
R7824	NRSA63J-222X	MG RESISTOR	2.2kΩ 1/16W J	
R7825	NRSA63J-222X	MG RESISTOR	2.2kΩ 1/16W J	
R7852	NRSA63J-104X	MG RESISTOR	100kΩ 1/16W J	
R7867	NRSA63J-103X	MG RESISTOR	10kΩ 1/16W J	
R7871	NRSA63J-104X	MG RESISTOR	100kΩ 1/16W J	
R7875	NRSA63J-104X	MG RESISTOR	100kΩ 1/16W J	
R7876	NRSA63J-103X	MG RESISTOR	10kΩ 1/16W J	
R7878	NRSA63J-104X	MG RESISTOR	100kΩ 1/16W J	
R7879	NRSA63J-103X	MG RESISTOR	10kΩ 1/16W J	
R7881	QRE141J-103Y	C RESISTOR	10kΩ 1/4W J	
R7886	NRSA63J-103X	MG RESISTOR	10kΩ 1/16W J	
R7892	NRSA63J-103X	MG RESISTOR	10kΩ 1/16W J	
R7897	NRSA63J-103X	MG RESISTOR	10kΩ 1/16W J	
R8004	NRSA63J-152X	MG RESISTOR	1.5kΩ 1/16W J	
R8005	NRSA63J-123X	MG RESISTOR	12kΩ 1/16W J	
R8006	NRSA63J-103X	MG RESISTOR	10kΩ 1/16W J	
R8020	NRSA63J-392X	MG RESISTOR	3.9kΩ 1/16W J	
R8021	NRSA63J-104X	MG RESISTOR	100kΩ 1/16W J	
R8030	NRSA63J-302X	MG RESISTOR	3kΩ 1/16W J	
R8031	NRSA63J-122X	MG RESISTOR	1.2kΩ 1/16W J	
R8032	NRSA63J-123X	MG RESISTOR	12kΩ 1/16W J	
R8033	NRSA63J-204X	MG RESISTOR	200kΩ 1/16W J	
R8035	NRSA63J-101X	MG RESISTOR	100Ω 1/16W J	
R8036	NRSA63J-101X	MG RESISTOR	100Ω 1/16W J	
R8037	NRSA63J-393X	MG RESISTOR	39kΩ 1/16W J	
R8038	NRSA63J-243X	MG RESISTOR	24kΩ 1/16W J	
R8039	QRE141J-823Y	C RESISTOR	82kΩ 1/4W J	
R8042	NRSA63J-392X	MG RESISTOR	3.9kΩ 1/16W J	
R8043	NRSA63J-103X	MG RESISTOR	10kΩ 1/16W J	
R8046	NRSA63J-393X	MG RESISTOR	39kΩ 1/16W J	
R8060	QRE141J-332Y	C RESISTOR	3.3kΩ 1/4W J	
R8061	NRSA63J-103X	MG RESISTOR	10kΩ 1/16W J	
R8062	NRSA63J-103X	MG RESISTOR	10kΩ 1/16W J	
R8088	NRSA63J-224X	MG RESISTOR	220kΩ 1/16W J	
R8090	QRE141J-183Y	C RESISTOR	18kΩ 1/4W J	
R8091	QRE141J-823Y	C RESISTOR	82kΩ 1/4W J	
R8092	NRSA63J-133X	MG RESISTOR	13kΩ 1/16W J	
R8093	NRSA63J-471X	MG RESISTOR	470Ω 1/16W J	
R8094	NRSA63J-243X	MG RESISTOR	24kΩ 1/16W J	
R8095	NRSA63J-0R0X	MG RESISTOR	0Ω 1/16W J	
R8104	NRSA63J-152X	MG RESISTOR	1.5kΩ 1/16W J	
R8105	NRSA63J-123X	MG RESISTOR	12kΩ 1/16W J	
R8106	NRSA63J-103X	MG RESISTOR	10kΩ 1/16W J	
R8120	NRSA63J-392X	MG RESISTOR	3.9kΩ 1/16W J	
R8121	NRSA63J-104X	MG RESISTOR	100kΩ 1/16W J	
R8130	NRSA63J-302X	MG RESISTOR	3kΩ 1/16W J	
R8131	NRSA63J-122X	MG RESISTOR	1.2kΩ 1/16W J	
R8132	NRSA63J-123X	MG RESISTOR	12kΩ 1/16W J	
R8133	NRSA63J-204X	MG RESISTOR	200kΩ 1/16W J	
R8135	NRSA63J-101X	MG RESISTOR	100Ω 1/16W J	
R8136	NRSA63J-101X	MG RESISTOR	100Ω 1/16W J	
R8137	NRSA63J-393X	MG RESISTOR	39kΩ 1/16W J	
R8138	NRSA63J-243X	MG RESISTOR	24kΩ 1/16W J	
R8139	QRE141J-823Y	C RESISTOR	82kΩ 1/4W J	
R8142	NRSA63J-392X	MG RESISTOR	3.9kΩ 1/16W J	
R8143	NRSA63J-103X	MG RESISTOR	10kΩ 1/16W J	
R8146	NRSA63J-393X	MG RESISTOR	39kΩ 1/16W J	
R8160	QRE141J-332Y	C RESISTOR	3.3kΩ 1/4W J	
R8161	NRSA63J-103X	MG RESISTOR	10kΩ 1/16W J	
R8162	NRSA63J-103X	MG RESISTOR	10kΩ 1/16W J	
R8181	NRSA63J-473X	MG RESISTOR	47kΩ 1/16W J	
R8182	NRSA63J-822X	MG RESISTOR	8.2kΩ 1/16W J	
R8188	NRSA63J-224X	MG RESISTOR	220kΩ 1/16W J	
R8190	QRE141J-183Y	C RESISTOR	18kΩ 1/4W J	
R8191	QRE141J-823Y	C RESISTOR	82kΩ 1/4W J	
R8192	NRSA63J-133X	MG RESISTOR	13kΩ 1/16W J	
R8193	NRSA63J-471X	MG RESISTOR	470Ω 1/16W J	
R8194	NRSA63J-243X	MG RESISTOR	24kΩ 1/16W J	
R8195	NRSA63J-0R0X	MG RESISTOR	0Ω 1/16W J	
R8211	NRSA63J-223X	MG RESISTOR	22kΩ 1/16W J	
R8212	NRSA63J-103X	MG RESISTOR	10kΩ 1/16W J	
R8223	NRSA63J-0R0X	MG RESISTOR	0Ω 1/16W J	
R8224	NRSA63J-0R0X	MG RESISTOR	0Ω 1/16W J	
R8225	NRSA63J-0R0X	MG RESISTOR	0Ω 1/16W J	
R8230	NRSA63J-752X	MG RESISTOR	7.5kΩ 1/16W J	

⚠ Symbol No.	Part No.	Part Name	Description	Local
R8231	NRSA63J-392X	MG RESISTOR	3.9kΩ 1/16W J	
R8232	QRE141J-274Y	C RESISTOR	270kΩ 1/4W J	
R8235	NRSA63J-224X	MG RESISTOR	220kΩ 1/16W J	
R8237	NRSA63J-243X	MG RESISTOR	24kΩ 1/16W J	
R8238	NRSA63J-223X	MG RESISTOR	22kΩ 1/16W J	
R8260	NRSA63J-474X	MG RESISTOR	470kΩ 1/16W J	
R8261	NRSA63J-474X	MG RESISTOR	470kΩ 1/16W J	
R8262	NRSA63J-101X	MG RESISTOR	100Ω 1/16W J	
R8263	NRSA63J-475X	MG RESISTOR	4.7MΩ 1/16W J	
R8264	NRSA63J-153X	MG RESISTOR	15kΩ 1/16W J	
R8265	NRSA63J-562X	MG RESISTOR	5.6kΩ 1/16W J	
R8266	NRSA63J-472X	MG RESISTOR	4.7kΩ 1/16W J	
R8267	NRSA63J-104X	MG RESISTOR	100kΩ 1/16W J	
R8268	NRSA63J-622X	MG RESISTOR	6.2kΩ 1/16W J	
R8269	QRE141J-222Y	C RESISTOR	2.2kΩ 1/4W J	
R8335	NRSA63J-224X	MG RESISTOR	220kΩ 1/16W J	
R8337	NRSA63J-243X	MG RESISTOR	24kΩ 1/16W J	
R8338	NRSA63J-223X	MG RESISTOR	22kΩ 1/16W J	
R8507	NRSA63J-104X	MG RESISTOR	100kΩ 1/16W J	
R8508	NRSA63J-243X	MG RESISTOR	24kΩ 1/16W J	
R8509	NRSA63J-243X	MG RESISTOR	24kΩ 1/16W J	
R8510	NRSA63J-243X	MG RESISTOR	24kΩ 1/16W J	
R8511	NRSA63J-243X	MG RESISTOR	24kΩ 1/16W J	
R8512	NRSA63J-243X	MG RESISTOR	24kΩ 1/16W J	
R8513	NRSA63J-243X	MG RESISTOR	24kΩ 1/16W J	
R8514	NRSA63J-243X	MG RESISTOR	24kΩ 1/16W J	
R8521	NRSA63J-243X	MG RESISTOR	24kΩ 1/16W J	
R8523	QRZ9006-4R7X	F.RESISTOR	4.7Ω 1/4W J	
R8524	QRE141J-561Y	C RESISTOR	560Ω 1/4W J	
R8529	NRSA63J-113X	MG RESISTOR	11kΩ 1/16W J	
R8578	NRSA63J-272X	MG RESISTOR	2.7kΩ 1/16W J	
R8579	NRSA63J-273X	MG RESISTOR	27kΩ 1/16W J	
R8900	QRE141J-102Y	C RESISTOR	1kΩ 1/4W J	
R8910	NRSA63J-471X	MG RESISTOR	470Ω 1/16W J	
R8911	NRSA63J-222X	MG RESISTOR	2.2kΩ 1/16W J	
R8912	NRSA63J-470X	MG RESISTOR	47Ω 1/16W J	
R8913	NRSA63J-473X	MG RESISTOR	47kΩ 1/16W J	
R8915	NRSA63J-103X	MG RESISTOR	10kΩ 1/16W J	
R9000	NRSA63J-103X	MG RESISTOR	10kΩ 1/16W J	
R9001	NRSA63J-104X	MG RESISTOR	100kΩ 1/16W J	
R9002	NRSA63J-102X	MG RESISTOR	1kΩ 1/16W J	
R9003	NRSA63J-824X	MG RESISTOR	820kΩ 1/16W J	
R9004	NRSA63J-222X	MG RESISTOR	2.2kΩ 1/16W J	
R9005	NRSA63J-102X	MG RESISTOR	1kΩ 1/16W J	
R9006	NRSA63J-103X	MG RESISTOR	10kΩ 1/16W J	
R9007	NRSA63J-104X	MG RESISTOR	100kΩ 1/16W J	
R9008	NRSA63J-102X	MG RESISTOR	1kΩ 1/16W J	
R9009	NRSA63J-473X	MG RESISTOR	47kΩ 1/16W J	
R9010	NRSA63J-473X	MG RESISTOR	47kΩ 1/16W J	
R9011	NRSA63J-473X	MG RESISTOR	47kΩ 1/16W J	
R9012	NRSA63J-473X	MG RESISTOR	47kΩ 1/16W J	
R9013	NRSA63J-103X	MG RESISTOR	10kΩ 1/16W J	
R9014	NRSA63J-103X	MG RESISTOR	10kΩ 1/16W J	
R9015	QRE141J-221Y	C RESISTOR	220Ω 1/4W J	
R9017	NRSA63J-104X	MG RESISTOR	100kΩ 1/16W J	
R9021	NRSA63J-472X	MG RESISTOR	4.7kΩ 1/16W J	
R9022	NRSA63J-472X	MG RESISTOR	4.7kΩ 1/16W J	
R9101	NRSA63J-472X	MG RESISTOR	4.7kΩ 1/16W J	
R9102	NRSA63J-472X	MG RESISTOR	4.7kΩ 1/16W J	
R9103	NRSA63J-472X	MG RESISTOR	4.7kΩ 1/16W J	
R9104	NRSA63J-472X	MG RESISTOR	4.7kΩ 1/16W J	
VR901	QVQ0306-B24	V RESISTOR		
L9100	QQL231K-2R2Y	COIL	2.2uH K	
L9101	QQL231K-470Y	COIL	47uH K	
L9102	QQL231K-470Y	COIL	47uH K	
CN720	QGF1036C1-19	CONNECTOR	FFC/FPC (1-19)	
CN730	QGF1205C1-25	CONNECTOR	FFC/FPC (1-25)	
CN740	QGF1205F1-05	CONNECTOR	FFC/FPC (1-5)	
CN750	QGF1205F1-11	CONNECTOR	FFC/FPC (1-11)	
CN760	QGF1205C1-08	CONNECTOR	FFC/FPC (1-8)	
CN788	QGF1205C1-05	CONNECTOR	FFC/FPC (1-5)	
CN799	QGF1210G1-06	CONNECTOR	FFC/FPC (1-6)	
CN800	QGF1036C1-10	CONNECTOR	FFC/FPC (1-10)	
CN820	QGF1205C1-08	CONNECTOR	FFC/FPC (1-8)	
CN830	QGF1205C1-13	CONNECTOR	FFC/FPC (1-13)	
CN850	QGB2510J1-06	CONNECTOR	B-B (1-6)	

⚠ Symbol No.	Part No.	Part Name	Descrip ion	Local
CN901	QGF1205F1-05	CONNECTOR	FFC/FPC (1-5)	
FW910	QUM153-21DGZ4-E	FLAT W RE		
J700	QNB0261-001	SPK TERMINAL		
J800	QNN0732-001	AUX JACK		
J880	QNN0284-001	PIN JACK		
J901	QNS0252-001	MIC JACK		
J902	QNS0252-001	MIC JACK		
J910	QNS0170-001	HEADPHONE JACK		
K8000	NRSA63J-0R0X	MG RESISTOR	0Ω 1/16W J	
K8001	NRSA63J-0R0X	MG RESISTOR	0Ω 1/16W J	
K9100	QQR0621-001Z	FERRATE BEADS		
RY712	QSK0109-001	RELAY		
RY756	QSK0109-001	RELAY		
X7700	QAX0711-002Z	CRYSTAL	8.000000MHz	

Primary board (DX-T5)

Block No. [0][9]

⚠ Symbol No.	Part No.	Part Name	Descrip ion	Local
IC920	BH7868FS-X	IC		
IC930	GP1FAV30TK0F	OPTICAL JACK		
Q1000	KTC2026/Y/	TRANSISTOR		
Q1001	KTC3203/OY/-T	TRANSISTOR		
Q2007	KTA1046/Y/	TRANSISTOR		
Q2008	KTC3199/GL/-T	TRANSISTOR		
Q2009	KTC3199/GL/-T	TRANSISTOR		
Q9300	KRA110M-T	TRANSISTOR		
Q9301	KRC110M-T	TRANSISTOR		
Q9303	KTC3199/GL/-T	TRANSISTOR		
⚠ D1000	1N5402M-20	DIODE		
⚠ D1001	1N5402M-20	DIODE		
⚠ D1002	1N5402M-20	DIODE		
⚠ D1003	1N5402M-20	DIODE		
⚠ D1006	6A10E2	SI DIODE		
⚠ D1007	6A10E2	SI DIODE		
⚠ D1010	6A10E2	SI DIODE		
⚠ D1011	6A10E2	SI DIODE		
D1012	MTZJ6 2B-T2	Z DIODE		
D1013	MTZJ18B-T2	Z DIODE		
D1014	MTZJ18B-T2	Z DIODE		
D1015	1N4003S-T5	SI DIODE		
D1016	1N4003S-T5	SI DIODE		
D1017	1N4003S-T5	SI DIODE		
⚠ D2001	6A10E2	SI DIODE		
⚠ D2002	6A10E2	SI DIODE		
⚠ D2003	6A10E2	SI DIODE		
⚠ D2004	6A10E2	SI DIODE		
D2008	2A02-M	DIODE		
D2009	MTZJ5.1C-T2	Z DIODE		
D2013	1SS133-T2	SI DIODE		
D9300	2A02-M	DIODE		
D9301	MTZJ3.3B-T2	Z DIODE		
D9302	MTZJ2 0A-T2	Z DIODE		
D9303	MTZJ3 9B-T2	Z DIODE		
D9310	MTZJ3 0B-T2	Z DIODE		
D9311	1N4003S-T5	SI DIODE		
D9312	1N4003S-T5	SI DIODE		
D9313	1N4003S-T5	SI DIODE		
C1002	QETN1HM-226Z	E CAPACITOR	22uF 50V M	
C1003	QETN1HM-226Z	E CAPACITOR	22uF 50V M	
C1004	QDYB1CM-103Y	C CAPACITOR	0.01uF 16V M	
C1005	QETN1HM-106Z	E CAPACITOR	10uF 50V M	
C1010	QFLC1HJ-104Z	M CAPACITOR	0.1uF 50V J	
C1011	QFLC1HJ-104Z	M CAPACITOR	0.1uF 50V J	
C1012	QFLC1HJ-104Z	M CAPACITOR	0.1uF 50V J	
C1013	QFKC2EK-104Z	MM CAPACITOR	0.1uF 250V K	
C1014	QFKC2EK-104Z	MM CAPACITOR	0.1uF 250V K	
C1015	QFKC2EK-103Z	MM CAPACITOR	0.01uF 250V K	
C1016	QETN2AM-476Z	E CAPACITOR	47uF 100V M	
C1017	QETN1HM-107Z	E CAPACITOR	100uF 50V M	

⚠ Symbol No.	Part No.	Part Name	Descrip ion	Local
C2000	QEZ0706-478	E CAPACITOR	4700uF	
C2004	QEZ0706-478	E CAPACITOR	4700uF	
C2005	QFLC2AJ-103Z	M CAPACITOR	0 01uF 100V J	
C2006	QETM1HM-228	E CAPACITOR	2200uF 50V M	
C2007	QFLC2AJ-103Z	M CAPACITOR	0 01uF 100V J	
C2008	QETM1HM-228	E CAPACITOR	2200uF 50V M	
C2009	QFKC2EK-104Z	MM CAPACITOR	0.1uF 250V K	
C2010	QCBB1HK-103Y	C CAPACITOR	0 01uF 50V K	
C2011	QCBB1HK-221Y	C CAPACITOR	220pF 50V K	
C2012	QETM1CM-478	E CAPACITOR	4700uF 16V M	
C2013	QETM1EM-478	E CAPACITOR	4700uF 25V M	
C9200	QETN1AM-477Z	E CAPACITOR	470uF 10V M	
C9201	QCBB1HK-104Y	C CAPACITOR	0.1uF 50V K	
C9204	QETN1HM-105Z	E CAPACITOR	1uF 50V M	
C9206	QETN1HM-105Z	E CAPACITOR	1uF 50V M	
C9209	QETN1CM-226Z	E CAPACITOR	22uF 16V M	
C9211	QETN1HM-105Z	E CAPACITOR	1uF 50V M	
C9213	QETN1HM-105Z	E CAPACITOR	1uF 50V M	
C9215	QETN1HM-105Z	E CAPACITOR	1uF 50V M	
C9216	QCBB1HK-104Y	C CAPACITOR	0.1uF 50V K	
C9218	QETN0JM-477Z	E CAPACITOR	470uF 6.3V M	
C9221	QETN0JM-477Z	E CAPACITOR	470uF 6.3V M	
C9224	QETN0JM-477Z	E CAPACITOR	470uF 6.3V M	
C9227	QETN0JM-477Z	E CAPACITOR	470uF 6.3V M	
C9230	QETN0JM-477Z	E CAPACITOR	470uF 6.3V M	
C9232	QETN0JM-477Z	E CAPACITOR	470uF 6.3V M	
C9300	QETN0JM-107Z	E CAPACITOR	100uF 6.3V M	
C9303	QETN1CM-107Z	E CAPACITOR	100uF 16V M	
⚠ R1000	QRK126J-470X	UNF C RESISTOR	47Ω 1/2W J	
R1001	QRE141J-753Y	C RESISTOR	75kΩ 1/4W J	
R1002	QRE141J-104Y	C RESISTOR	100kΩ 1/4W J	
R1003	QRE141J-104Y	C RESISTOR	100kΩ 1/4W J	
R1005	QRE141J-753Y	C RESISTOR	75kΩ 1/4W J	
R2000	QRE141J-104Y	C RESISTOR	100kΩ 1/4W J	
R2001	QRE141J-104Y	C RESISTOR	100kΩ 1/4W J	
R2002	QRE141J-104Y	C RESISTOR	100kΩ 1/4W J	
R2003	QRE141J-104Y	C RESISTOR	100kΩ 1/4W J	
R2004	QRE141J-681Y	C RESISTOR	680Ω 1/4W J	
R2005	QRE141J-272Y	C RESISTOR	2.7kΩ 1/4W J	
R2006	QRE141J-681Y	C RESISTOR	680Ω 1/4W J	
R2007	QRE141J-472Y	C RESISTOR	4.7kΩ 1/4W J	
R2008	QRE141J-102Y	C RESISTOR	1kΩ 1/4W J	
R2009	QRE141J-102Y	C RESISTOR	1kΩ 1/4W J	
R2010	QRE141J-102Y	C RESISTOR	1kΩ 1/4W J	
R2011	QRL01DJ-471X	OMF RESISTOR	470Ω 1W J	
R2012	QRL01DJ-471X	OMF RESISTOR	470Ω 1W J	
R2014	QRE141J-273Y	C RESISTOR	27kΩ 1/4W J	
R9201	QRE141J-391Y	C RESISTOR	390Ω 1/4W J	
R9202	QRE141J-391Y	C RESISTOR	390Ω 1/4W J	
R9203	QRE141J-361Y	C RESISTOR	360Ω 1/4W J	
R9204	QRE141J-131Y	C RESISTOR	130Ω 1/4W J	
R9205	QRE141J-361Y	C RESISTOR	360Ω 1/4W J	
R9206	QRE141J-131Y	C RESISTOR	130Ω 1/4W J	
R9207	QRE141J-391Y	C RESISTOR	390Ω 1/4W J	
R9208	QRE141J-391Y	C RESISTOR	390Ω 1/4W J	
R9209	QRE141J-391Y	C RESISTOR	390Ω 1/4W J	
R9210	QRE141J-391Y	C RESISTOR	390Ω 1/4W J	
R9218	QRE141J-750Y	C RESISTOR	75Ω 1/4W J	
R9221	QRE141J-750Y	C RESISTOR	75Ω 1/4W J	
R9224	QRE141J-750Y	C RESISTOR	75Ω 1/4W J	
R9227	QRE141J-750Y	C RESISTOR	75Ω 1/4W J	
R9230	QRE141J-750Y	C RESISTOR	75Ω 1/4W J	
R9232	QRE141J-750Y	C RESISTOR	75Ω 1/4W J	
R9300	QRT017J-2R2	MF RESISTOR	2 2Ω 1W J	
R9301	QRE141J-681Y	C RESISTOR	680Ω 1/4W J	
R9302	QRZ9006-4R7X	F.RESISTOR	4.7Ω 1/4W J	
R9303	QRE141J-271Y	C RESISTOR	270Ω 1/4W J	
R9310	QRE141J-470Y	C RESISTOR	47Ω 1/4W J	
CN100	QGA7901C1-02	CONNECTOR	W-B (1-2)	
CN101	QGA7901C1-04	CONNECTOR	W-B (1-4)	
CN102	QGA7901C1-03	CONNECTOR	W-B (1-3)	
CN103	QGA3901F1-08	CONNECTOR	W-B (1-8)	
CN104	QGB2510J1-13	CONNECTOR	B-B (1-13)	
CN105	QGD2503F1-03	CONNECTOR	(1-3)	
CN106	QGA3901F1-03	CONNECTOR	W-B (1-3)	
CN200	QGB2510J1-12	CONNECTOR	B-B (1-12)	

⚠ Symbol No.	Part No.	Part Name	Description	Local
CN201	QGB2510J1-09	CONNECTOR	B-B (1-9)	
CN202	QGD2504C1-03Z	CONNECTOR	(1-3)	
CN203	QGB2510K2-06	CONNECTOR	B-B (1-6)	
CN204	QGB2510K2-13	CONNECTOR	B-B (1-13)	
CN920	QGF1205C1-08	CONNECTOR	FFC/FPC (1-8)	
CN930	QGF1036C1-28	CONNECTOR	FFC/FPC (1-28)	
CN931	QGF1205C1-11	CONNECTOR	FFC/FPC (1-11)	
EP201	E409182-001SM	GRAND TERMINAL		
H2001	GV40577-001A	HEAT SINK		
IH920	GV40397-003A	IC HOLDER		
J920	QNN0624-001	P N JACK		
J921	QNN0557-002	P N JACK		
PP201	QZW0038-001	WIRE CLAMP		
PP202	QZW0038-001	WIRE CLAMP		
⚠ S1000	QSW0812-001	VOLTAGE SWITCH		
Z1001	QNG0003-001Z	FUSE CLIP		
Z1002	QNG0003-001Z	FUSE CLIP		
Z1003	QNG0003-001Z	FUSE CLIP		
Z1004	QNG0003-001Z	FUSE CLIP		
Z1005	QNG0003-001Z	FUSE CLIP		
Z1006	QNG0003-001Z	FUSE CLIP		
Z1007	QNG0003-001Z	FUSE CLIP		
Z1008	QNG0003-001Z	FUSE CLIP		
Z1009	QNG0003-001Z	FUSE CLIP		
Z1010	QNG0003-001Z	FUSE CLIP		
Z1011	QNG0003-001Z	FUSE CLIP		
Z1012	QNG0003-001Z	FUSE CLIP		
Z1013	QNG0003-001Z	FUSE CLIP		
Z1014	QNG0003-001Z	FUSE CLIP		
Z1015	QNG0003-001Z	FUSE CLIP		
Z1016	QNG0003-001Z	FUSE CLIP		

DVD servo board(FMU-SM1-1M)
(DX-T9,DX-T7)

Block No. [1][0]

⚠ Symbol No.	Part No.	Part Name	Description	Local
IC201	LA6502-X	IC		
IC301	MN2DS0009AA	IC		
IC302	MM1701CH-X	IC		
IC305	MM1563BF-X	IC	3.1V Regulator	
IC451	MN101C61GNW	IC		
IC452	BR93L56RFV-W-X	IC		
IC453	S-80827CNNB-G-W	IC		
IC505	K4S641632H-UC75	IC		
IC505 or	HY57V641620ETP7	IC(DIGITAL)		
IC509	SG32M90TFIR3	IC(MICRO C ROM)		
IC510	BR24L16FV-W-X	IC		
IC701	AK4384VT-X	IC		
IC701 or	AK4384ET-X	IC		
IC702	AK4384VT-X	IC		
IC702 or	AK4384ET-X	IC		
IC703	AK4384VT-X	IC		
IC703 or	AK4384ET-X	IC		
IC704	AK5357VT-X	IC		
IC704 or	AK5357ET-X	IC		
IC705	MM1615AN-X	IC		
Q101	KTA1001/Y/-X	TRANSISTOR		
Q101 or	2SB1424/R/-W	TRANSISTOR		
Q102	2SC4617/R/-X	TRANSISTOR		
Q103	KTA1001/Y/-X	TRANSISTOR		
Q103 or	2SB1424/R/-W	TRANSISTOR		
Q104	2SC4617/R/-X	TRANSISTOR		
Q105	UN2119-X	TRANSISTOR		
Q105 or	KRA116S-X	TRANSISTOR		
C101	NCF31EZ-104X	C CAPACITOR	0.1uF 25V Z	
C102	NCF31EZ-104X	C CAPACITOR	0.1uF 25V Z	
C103	NCF31EZ-104X	C CAPACITOR	0.1uF 25V Z	
C104	NCF31EZ-104X	C CAPACITOR	0.1uF 25V Z	
C105	NEAF0JM-476X	E CAPACITOR	47uF 6.3V M	

⚠ Symbol No.	Part No.	Part Name	Description	Local
C106	NBE20JM-226X	TA E CAPACITOR	22uF 6.3V M	
C107	NCF31EZ-104X	C CAPACITOR	0.1uF 25V Z	
C108	NBE20JM-226X	TA E CAPACITOR	22uF 6.3V M	
C201	NDC31HJ-221X	C CAPACITOR	220pF 50V J	
C202	NDC31HJ-221X	C CAPACITOR	220pF 50V J	
C203	NCB31HK-103X	C CAPACITOR	0.01uF 50V K	
C204	NCF31EZ-104X	C CAPACITOR	0.1uF 25V Z	
C205	NCB31HK-271X	C CAPACITOR	270pF 50V K	
C206	NDC31HJ-151X	C CAPACITOR	150pF 50V J	
C210	NCF31AZ-105X	C CAPACITOR	1uF 10V Z	
C211	NCB31EK-223X	C CAPACITOR	0.022uF 25V K	
C217	NCF31EZ-104X	C CAPACITOR	0.1uF 25V Z	
C251	NCB31AK-474X	C CAPACITOR	0.47uF 10V K	
C256	NCB31CK-104X	C CAPACITOR	0.1uF 16V K	
C257	NCB31HK-822X	C CAPACITOR	8200pF 50V K	
C258	NCB31CK-153X	C CAPACITOR	0.015uF 16V K	
C259	NCB31CK-153X	C CAPACITOR	0.015uF 16V K	
C260	NCB31HK-223X	C CAPACITOR	0.022uF 50V K	
C261	NCB31HK-223X	C CAPACITOR	0.022uF 50V K	
C262	NCB31HK-223X	C CAPACITOR	0.022uF 50V K	
C300	NCF31EZ-104X	C CAPACITOR	0.1uF 25V Z	
C301	NEAF0GM-476X	E CAPACITOR	47uF 4V M	
C302	NEAF0GM-476X	E CAPACITOR	47uF 4V M	
C303	NEAF0GM-476X	E CAPACITOR	47uF 4V M	
C304	NCB30JK-105X	C CAPACITOR	1uF 6.3V K	
C305	NCF31EZ-104X	C CAPACITOR	0.1uF 25V Z	
C306	NCF31EZ-104X	C CAPACITOR	0.1uF 25V Z	
C307	NCF31EZ-104X	C CAPACITOR	0.1uF 25V Z	
C308	NCF31EZ-104X	C CAPACITOR	0.1uF 25V Z	
C309	NCF31EZ-104X	C CAPACITOR	0.1uF 25V Z	
C310	NCB31CK-104X	C CAPACITOR	0.1uF 16V K	
C311	NCF31EZ-104X	C CAPACITOR	0.1uF 25V Z	
C312	NCF31EZ-104X	C CAPACITOR	0.1uF 25V Z	
C313	NCF31EZ-104X	C CAPACITOR	0.1uF 25V Z	
C314	NCF31EZ-104X	C CAPACITOR	0.1uF 25V Z	
C315	NCF31EZ-104X	C CAPACITOR	0.1uF 25V Z	
C316	NCF31EZ-104X	C CAPACITOR	0.1uF 25V Z	
C318	NCF31EZ-104X	C CAPACITOR	0.1uF 25V Z	
C319	NCF31EZ-104X	C CAPACITOR	0.1uF 25V Z	
C320	NCB31CK-104X	C CAPACITOR	0.1uF 16V K	
C321	NCB31CK-104X	C CAPACITOR	0.1uF 16V K	
C322	NCB31CK-104X	C CAPACITOR	0.1uF 16V K	
C323	NCB31CK-104X	C CAPACITOR	0.1uF 16V K	
C324	NCB30JK-105X	C CAPACITOR	1uF 6.3V K	
C325	NDC31HJ-120X	C CAPACITOR	12pF 50V J	
C326	NDC31HJ-100X	C CAPACITOR	10pF 50V J	
C328	NCB31HK-103X	C CAPACITOR	0.01uF 50V K	
C329	NCF31EZ-104X	C CAPACITOR	0.1uF 25V Z	
C330	NCF31EZ-104X	C CAPACITOR	0.1uF 25V Z	
C331	NCB31CK-333X	C CAPACITOR	0.033uF 16V K	
C332	NCF31EZ-104X	C CAPACITOR	0.1uF 25V Z	
C333	NCF31EZ-104X	C CAPACITOR	0.1uF 25V Z	
C334	NCF31EZ-104X	C CAPACITOR	0.1uF 25V Z	
C335	NCF31EZ-104X	C CAPACITOR	0.1uF 25V Z	
C337	NCB31CK-183X	C CAPACITOR	0.018uF 16V K	
C338	NCB31HK-562X	C CAPACITOR	5600pF 50V K	
C339	NBE20JM-106X	TA E CAPACITOR	10uF 6.3V M	
C340	NCB30JK-105X	C CAPACITOR	1uF 6.3V K	
C341	NCB30JK-105X	C CAPACITOR	1uF 6.3V K	
C347	NCB31CK-104X	C CAPACITOR	0.1uF 16V K	
C348	NCB31CK-104X	C CAPACITOR	0.1uF 16V K	
C349	NCF31EZ-104X	C CAPACITOR	0.1uF 25V Z	
C350	NCB31HK-103X	C CAPACITOR	0.01uF 50V K	
C351	NCB31HK-103X	C CAPACITOR	0.01uF 50V K	
C352	NCB31CK-153X	C CAPACITOR	0.015uF 16V K	
C353	NCB31HK-561X	C CAPACITOR	560pF 50V K	
C354	NCB31HK-561X	C CAPACITOR	560pF 50V K	
C356	NCB30JK-105X	C CAPACITOR	1uF 6.3V K	
C359	NCB30JK-105X	C CAPACITOR	1uF 6.3V K	
C371	NCF31AZ-105X	C CAPACITOR	1uF 10V Z	
C372	NCF31EZ-104X	C CAPACITOR	0.1uF 25V Z	
C373	NCF31EZ-104X	C CAPACITOR	0.1uF 25V Z	
C374	NCF31EZ-104X	C CAPACITOR	0.1uF 25V Z	
C375	NCF31EZ-104X	C CAPACITOR	0.1uF 25V Z	
C376	NCF31EZ-104X	C CAPACITOR	0.1uF 25V Z	
C377	NCF31EZ-104X	C CAPACITOR	0.1uF 25V Z	
C378	NCF31EZ-104X	C CAPACITOR	0.1uF 25V Z	
C379	NCF31EZ-104X	C CAPACITOR	0.1uF 25V Z	

⚠ Symbol No.	Part No.	Part Name	Descrip ion	Local
C380	NCB21CK-105X	C CAPACITOR	1uF 16V K	
C381	NCB21AK-225X	C CAPACITOR	2.2uF 10V K	
C382	NCB31HK-471X	C CAPACITOR	470pF 50V K	
C383	NCF31EZ-104X	C CAPACITOR	0.1uF 25V Z	
C386	NCF31EZ-104X	C CAPACITOR	0.1uF 25V Z	
C393	NCB31HK-103X	C CAPACITOR	0.01uF 50V K	
C451	NCF31EZ-104X	C CAPACITOR	0.1uF 25V Z	
C452	NCB31CK-104X	C CAPACITOR	0.1uF 16V K	
C453	NCF31EZ-104X	C CAPACITOR	0.1uF 25V Z	
C454	NCB31HK-103X	C CAPACITOR	0.01uF 50V K	
C455	NCB31HK-103X	C CAPACITOR	0.01uF 50V K	
C551	NCF31EZ-104X	C CAPACITOR	0.1uF 25V Z	
C554	NCF31EZ-104X	C CAPACITOR	0.1uF 25V Z	
C555	NCF31EZ-104X	C CAPACITOR	0.1uF 25V Z	
C556	NCF31AZ-105X	C CAPACITOR	1uF 10V Z	
C557	NCB31HK-102X	C CAPACITOR	1000pF 50V K	
C558	NEAF0GM-476X	E CAPACITOR	47uF 4V M	
C559	NCF31EZ-104X	C CAPACITOR	0.1uF 25V Z	
C560	NCF31EZ-104X	C CAPACITOR	0.1uF 25V Z	
C563	NCF31EZ-104X	C CAPACITOR	0.1uF 25V Z	
C564	NCF31EZ-104X	C CAPACITOR	0.1uF 25V Z	
C701	NCB21CK-105X	C CAPACITOR	1uF 16V K	
C702	NCB31HK-103X	C CAPACITOR	0.01uF 50V K	
C703	NCB30JK-105X	C CAPACITOR	1uF 6.3V K	
C704	NCF31AZ-105X	C CAPACITOR	1uF 10V Z	
C705	NCF31EZ-104X	C CAPACITOR	0.1uF 25V Z	
C706	NCF31EZ-104X	C CAPACITOR	0.1uF 25V Z	
C707	NEAF1CM-106X	E CAPACITOR	10uF 16V M	
C708	NEAF1CM-106X	E CAPACITOR	10uF 16V M	
C709	NEAF0JM-476X	E CAPACITOR	47uF 6.3V M	
C712	NCF31EZ-104X	C CAPACITOR	0.1uF 25V Z	
C713	NEAF1CM-106X	E CAPACITOR	10uF 16V M	
C714	NCF31EZ-104X	C CAPACITOR	0.1uF 25V Z	
C715	NCF31EZ-104X	C CAPACITOR	0.1uF 25V Z	
C716	NCF31EZ-104X	C CAPACITOR	0.1uF 25V Z	
C717	NCF31EZ-104X	C CAPACITOR	0.1uF 25V Z	
C718	NCF31EZ-104X	C CAPACITOR	0.1uF 25V Z	
C722	NCF31EZ-104X	C CAPACITOR	0.1uF 25V Z	
R101	NRSA63J-101X	MG RESISTOR	100Ω 1/16W J	
R102	NRSA63J-101X	MG RESISTOR	100Ω 1/16W J	
R103	NRSA63J-562X	MG RESISTOR	5.6kΩ 1/16W J	
R104	NRSA63J-432X	MG RESISTOR	4.3kΩ 1/16W J	
R105	NRS181J-180X	MG RESISTOR	18Ω 1/8W J	
R106	NRSA63J-2R2X	MG RESISTOR	2.2Ω 1/16W J	
R107	NRSA63J-102X	MG RESISTOR	1kΩ 1/16W J	
R108	NRSA63J-471X	MG RESISTOR	470Ω 1/16W J	
R109	NRSA63J-331X	MG RESISTOR	330Ω 1/16W J	
R111	NRSA63J-562X	MG RESISTOR	5.6kΩ 1/16W J	
R112	NRSA63J-432X	MG RESISTOR	4.3kΩ 1/16W J	
R113	NRS181J-180X	MG RESISTOR	18Ω 1/8W J	
R114	NRSA63J-2R2X	MG RESISTOR	2.2Ω 1/16W J	
R115	NRSA63J-102X	MG RESISTOR	1kΩ 1/16W J	
R116	NRSA63J-471X	MG RESISTOR	470Ω 1/16W J	
R117	NRSA63J-331X	MG RESISTOR	330Ω 1/16W J	
R125	NRSA63J-1R0X	MG RESISTOR	1Ω 1/16W J	
R126	NRSA63J-101X	MG RESISTOR	100Ω 1/16W J	
R127	NRSA63J-432X	MG RESISTOR	4.3kΩ 1/16W J	
R128	NRSA63J-562X	MG RESISTOR	5.6kΩ 1/16W J	
R202	NRSA63J-102X	MG RESISTOR	1kΩ 1/16W J	
R204	NRSA63J-273X	MG RESISTOR	27kΩ 1/16W J	
R205	NRSA63J-273X	MG RESISTOR	27kΩ 1/16W J	
R206	NRSA63J-303X	MG RESISTOR	30kΩ 1/16W J	
R207	NRSA63J-473X	MG RESISTOR	47kΩ 1/16W J	
R213	NRSA63J-103X	MG RESISTOR	10kΩ 1/16W J	
R214	NRSA63J-103X	MG RESISTOR	10kΩ 1/16W J	
R219	NRSA63J-183X	MG RESISTOR	18kΩ 1/16W J	
R220	NRSA63J-243X	MG RESISTOR	24kΩ 1/16W J	
R221	NRSA63J-682X	MG RESISTOR	6.8kΩ 1/16W J	
R251	NRS125J-R39X	MG RESISTOR	0.39Ω 1/2W J	
R259	NRSA63J-103X	MG RESISTOR	10kΩ 1/16W J	
R301	NRS181J-0R0X	MG RESISTOR	0Ω 1/8W J	
R303	NRSA63J-220X	MG RESISTOR	22Ω 1/16W J	
R306	NRSA63J-102X	MG RESISTOR	1kΩ 1/16W J	
R307	NRSA63J-102X	MG RESISTOR	1kΩ 1/16W J	
R308	NRSA63J-103X	MG RESISTOR	10kΩ 1/16W J	
R309	NRSA63J-104X	MG RESISTOR	100kΩ 1/16W J	
R310	NRSA63J-101X	MG RESISTOR	100Ω 1/16W J	

⚠ Symbol No.	Part No.	Part Name	Descrip ion	Local
R316	NRSA63J-102X	MG RESISTOR	1kΩ 1/16W J	
R319	NRSA63J-103X	MG RESISTOR	10kΩ 1/16W J	
R324	NRSA63J-331X	MG RESISTOR	330Ω 1/16W J	
R325	NRSA63J-331X	MG RESISTOR	330Ω 1/16W J	
R326	NRSA63J-331X	MG RESISTOR	330Ω 1/16W J	
R327	NRSA63J-331X	MG RESISTOR	330Ω 1/16W J	
R330	NRSA63J-331X	MG RESISTOR	330Ω 1/16W J	
R331	NRSA63J-331X	MG RESISTOR	330Ω 1/16W J	
R332	NRSA63J-331X	MG RESISTOR	330Ω 1/16W J	
R334	NRSA63J-151X	MG RESISTOR	150Ω 1/16W J	
R335	NRSA63J-151X	MG RESISTOR	150Ω 1/16W J	
R336	NRSA63J-151X	MG RESISTOR	150Ω 1/16W J	
R337	NRSA63J-151X	MG RESISTOR	150Ω 1/16W J	
R338	NRSA63J-0R0X	MG RESISTOR	0Ω 1/16W J	
R339	NRSA63J-0R0X	MG RESISTOR	0Ω 1/16W J	
R340	NRSA63D-303X	MG RESISTOR	30kΩ 1/16W D	
R341	NRSA63D-512X	MG RESISTOR	5.1kΩ 1/16W D	
R342	NRSA63D-242X	MG RESISTOR	2.4kΩ 1/16W D	
R345	NRSA63J-221X	MG RESISTOR	220Ω 1/16W J	
R346	NRSA63J-223X	MG RESISTOR	22kΩ 1/16W J	
R347	NRSA63J-203X	MG RESISTOR	20kΩ 1/16W J	
R348	NRSA63J-151X	MG RESISTOR	150Ω 1/16W J	
R349	NRSA63J-151X	MG RESISTOR	150Ω 1/16W J	
R350	NRSA63J-751X	MG RESISTOR	750Ω 1/16W J	
R351	NRSA63J-681X	MG RESISTOR	680Ω 1/16W J	
R352	NRSA63J-105X	MG RESISTOR	1MΩ 1/16W J	
R353	NRSA63J-101X	MG RESISTOR	100Ω 1/16W J	
R357	NRSA63J-221X	MG RESISTOR	220Ω 1/16W J	
R358	NRSA63J-221X	MG RESISTOR	220Ω 1/16W J	
R359	NRSA63J-221X	MG RESISTOR	220Ω 1/16W J	
R360	NRSA63J-221X	MG RESISTOR	220Ω 1/16W J	
R362	NRSA63J-331X	MG RESISTOR	330Ω 1/16W J	
R367	NRSA63J-221X	MG RESISTOR	220Ω 1/16W J	
R372	NRSA63J-103X	MG RESISTOR	10kΩ 1/16W J	
R373	NRSA63J-103X	MG RESISTOR	10kΩ 1/16W J	
R374	NRSA63J-102X	MG RESISTOR	1kΩ 1/16W J	
R375	NRSA63J-102X	MG RESISTOR	1kΩ 1/16W J	
R376	NRSA63J-102X	MG RESISTOR	1kΩ 1/16W J	
R377	NRSA63J-102X	MG RESISTOR	1kΩ 1/16W J	
R378	NRSA63J-102X	MG RESISTOR	1kΩ 1/16W J	
R383	NRSA63J-101X	MG RESISTOR	100Ω 1/16W J	
R384	NRSA63J-102X	MG RESISTOR	1kΩ 1/16W J	
R385	NRSA63J-102X	MG RESISTOR	1kΩ 1/16W J	
R392	NRSA63J-103X	MG RESISTOR	10kΩ 1/16W J	
R393	NRSA63J-0R0X	MG RESISTOR	0Ω 1/16W J	
R394	NRSA63J-0R0X	MG RESISTOR	0Ω 1/16W J	
R452	NRSA63J-222X	MG RESISTOR	2 2kΩ 1/16W J	
R453	NRSA63J-103X	MG RESISTOR	10kΩ 1/16W J	
R454	NRSA63J-103X	MG RESISTOR	10kΩ 1/16W J	
R455	NRSA63J-103X	MG RESISTOR	10kΩ 1/16W J	
R456	NRSA63J-103X	MG RESISTOR	10kΩ 1/16W J	
R457	NRSA63J-101X	MG RESISTOR	100Ω 1/16W J	
R458	NRSA63J-102X	MG RESISTOR	1kΩ 1/16W J	
R461	NRSA63J-101X	MG RESISTOR	100Ω 1/16W J	
R463	NRSA63J-101X	MG RESISTOR	100Ω 1/16W J	
R464	NRSA63J-101X	MG RESISTOR	100Ω 1/16W J	
R465	NRSA63J-102X	MG RESISTOR	1kΩ 1/16W J	
R535	NRSA63J-473X	MG RESISTOR	47kΩ 1/16W J	
R541	NRSA63J-473X	MG RESISTOR	47kΩ 1/16W J	
R701	NRSA63J-2R2X	MG RESISTOR	2 2Ω 1/16W J	
R703	NRSA63J-471X	MG RESISTOR	470Ω 1/16W J	
R704	NRSA63J-471X	MG RESISTOR	470Ω 1/16W J	
R705	NRSA63J-471X	MG RESISTOR	470Ω 1/16W J	
R706	NRSA63J-471X	MG RESISTOR	470Ω 1/16W J	
R707	NRSA63J-471X	MG RESISTOR	470Ω 1/16W J	
R708	NRSA63J-471X	MG RESISTOR	470Ω 1/16W J	
R714	NRSA63J-101X	MG RESISTOR	100Ω 1/16W J	
R715	NRSA63J-101X	MG RESISTOR	100Ω 1/16W J	
R716	NRSA63J-471X	MG RESISTOR	470Ω 1/16W J	
R717	NRSA63J-473X	MG RESISTOR	47kΩ 1/16W J	
R719	NRSA63J-5R1X	MG RESISTOR	5.1Ω 1/16W J	
R720	NRSA63J-473X	MG RESISTOR	47kΩ 1/16W J	
R722	NRSA63J-0R0X	MG RESISTOR	0Ω 1/16W J	
R731	NRSA63J-102X	MG RESISTOR	1kΩ 1/16W J	
R732	NRSA63J-471X	MG RESISTOR	470Ω 1/16W J	
CN101	QGF0523F1-25W	CONNECTOR	FFC/FPC (1-25)	
CN201	QGF1016F2-08W	CONNECTOR	FFC/FPC (1-8)	

⚠ Symbol No.	Part No.	Part Name	Description	Local
CN451	QGF1016F2-15W	CONNECTOR	FFC/FPC (1-15)	
CN452	QGA2001F2-02X	CONNECTOR	W-B (1-2)	
CN453	QGA2001F2-03X	CONNECTOR	W-B (1-3)	
CN701	QGF1016F2-28W	CONNECTOR	FFC/FPC (1-28)	
CN702	QGF1016F2-10W	CONNECTOR	FFC/FPC (1-10)	
CN703	QGF1016F2-08W	CONNECTOR	FFC/FPC (1-8)	
K351	NQR0502-001X	FERRITE BEADS		
K352	NQR0502-001X	FERRITE BEADS		
K454	NRSA63J-0R0X	MG RESISTOR	0Ω 1/16W J	
K455	NRSA63J-0R0X	MG RESISTOR	0Ω 1/16W J	
K456	NRSA63J-0R0X	MG RESISTOR	0Ω 1/16W J	
K501	NQR0502-001X	FERRITE BEADS		
K710	NQR0022-002X	FERRITE BEADS		
K732	NRSA63J-0R0X	MG RESISTOR	0Ω 1/16W J	
K733	NRSA63J-0R0X	MG RESISTOR	0Ω 1/16W J	
K734	NRSA63J-0R0X	MG RESISTOR	0Ω 1/16W J	
K735	NRSA63J-0R0X	MG RESISTOR	0Ω 1/16W J	
K736	NRSA63J-0R0X	MG RESISTOR	0Ω 1/16W J	
K737	NRSA63J-0R0X	MG RESISTOR	0Ω 1/16W J	
K738	NQR0022-005X	FERRITE BEADS		
K741	NQR0022-002X	FERRITE BEADS		
K744	NRSA63J-0R0X	MG RESISTOR	0Ω 1/16W J	
K748	NRSA63J-0R0X	MG RESISTOR	0Ω 1/16W J	
K749	NRSA63J-0R0X	MG RESISTOR	0Ω 1/16W J	
K750	NQR0022-002X	FERRITE BEADS		
K752	NQR0022-002X	FERRITE BEADS		
K754	NQR0022-002X	FERRITE BEADS		
K756	NQR0022-002X	FERRITE BEADS		
K758	NQR0022-002X	FERRITE BEADS		
TH301	NAD0025-103X	N THERMISTOR	10kΩ	
X301	NAX0741-001X	CRYSTAL		
X451	NAX0248-001X	C OSCILLATOR	8.000MHz	

Loading board(FMU-SM1-1M) (DX-T9,DX-T7)

Block No. [1][1]

⚠ Symbol No.	Part No.	Part Name	Description	Local
IC1	LB1641	IC		
IC2	LB1641	IC		
D1	MTZJ6.2A-T2	Z DIODE		
C1	QEKC1AM-107Z	E CAPACITOR	100uF 10V M	
C2	QCBB1HK-104Y	C CAPACITOR	0.1uF 50V K	
C3	QFLC1HJ-103Z	M CAPACITOR	0.01uF 50V J	
C5	QFLC1HJ-103Z	M CAPACITOR	0.01uF 50V J	
C6	QCBB1HK-104Y	C CAPACITOR	0.1uF 50V K	
C7	QCBB1HK-104Y	C CAPACITOR	0.1uF 50V K	
CN1	QGF1036F1-15	CONNECTOR	FFC/FPC (1-15)	
CN2	QGB2024K1-07S	CONNECTOR	B-B (1-7)	
CN3	QGB2024J1-07S	CONNECTOR	B-B (1-7)	
SW1	QSW0844-001	PUSH SWITCH		
SW2	QSW0844-001	PUSH SWITCH		
SW3	QSW0844-001	PUSH SWITCH		
SW4	QSW0844-001	PUSH SWITCH		
SW5	QSW0844-001	PUSH SWITCH		
SW6	QSW0854-002	PUSH SW		
SW8	QSW0923-001	DETECT SWITCH		

DVD servo board(FMU-SM1-11M) (DX-T5)

Block No. [1][2]

⚠ Symbol No.	Part No.	Part Name	Description	Local
IC201	LA6502-X	IC		
IC301	MN2DS0009AA	IC		
IC302	MM1701CH-X	IC		
IC305	MM1563BF-X	IC	3.1V Regulator	
IC451	MN101C61GNW	IC		
IC452	BR93L56RFV-W-X	IC		
IC453	S-80827CNNB-G-W	IC		
IC505	K4S641632H-UC75	IC		
IC505 or	HY57V641620ETP7	IC(DIGITAL)		
IC509	SG32M90TFIR3	IC(MICRO C ROM)		
IC510	BR24L16FV-W-X	IC		
IC701	AK4384VT-X	IC		
IC701 or	AK4384ET-X	IC		
IC705	MM1615AN-X	IC		
Q101	KTA1001/Y/-X	TRANSISTOR		
Q101 or	2SB1424/R/-W	TRANSISTOR		
Q102	2SC4617/R/-X	TRANSISTOR		
Q103	KTA1001/Y/-X	TRANSISTOR		
Q103 or	2SB1424/R/-W	TRANSISTOR		
Q104	2SC4617/R/-X	TRANSISTOR		
Q105	UN2119-X	TRANSISTOR		
Q105 or	KRA116S-X	TRANSISTOR		
C101	NCF31EZ-104X	C CAPACITOR	0.1uF 25V Z	
C102	NCF31EZ-104X	C CAPACITOR	0.1uF 25V Z	
C103	NCF31EZ-104X	C CAPACITOR	0.1uF 25V Z	
C104	NCF31EZ-104X	C CAPACITOR	0.1uF 25V Z	
C105	NEAF0JM-476X	E CAPACITOR	47uF 6.3V M	
C106	NBE20JM-226X	TA E CAPACITOR	22uF 6.3V M	
C107	NCF31EZ-104X	C CAPACITOR	0.1uF 25V Z	
C108	NBE20JM-226X	TA E CAPACITOR	22uF 6.3V M	
C201	NDC31HJ-221X	C CAPACITOR	220pF 50V J	
C202	NDC31HJ-221X	C CAPACITOR	220pF 50V J	
C203	NCB31HK-103X	C CAPACITOR	0.01uF 50V K	
C204	NCF31EZ-104X	C CAPACITOR	0.1uF 25V Z	
C205	NCB31HK-271X	C CAPACITOR	270pF 50V K	
C206	NDC31HJ-151X	C CAPACITOR	150pF 50V J	
C210	NCF31AZ-105X	C CAPACITOR	1uF 10V Z	
C211	NCB31EK-223X	C CAPACITOR	0.022uF 25V K	
C217	NCF31EZ-104X	C CAPACITOR	0.1uF 25V Z	
C251	NCB31AK-474X	C CAPACITOR	0.47uF 10V K	
C256	NCB31CK-104X	C CAPACITOR	0.1uF 16V K	
C257	NCB31HK-822X	C CAPACITOR	8200pF 50V K	
C258	NCB31CK-153X	C CAPACITOR	0.015uF 16V K	
C259	NCB31CK-153X	C CAPACITOR	0.015uF 16V K	
C260	NCB31HK-223X	C CAPACITOR	0.022uF 50V K	
C261	NCB31HK-223X	C CAPACITOR	0.022uF 50V K	
C262	NCB31HK-223X	C CAPACITOR	0.022uF 50V K	
C300	NCF31EZ-104X	C CAPACITOR	0.1uF 25V Z	
C301	NEAF0GM-476X	E CAPACITOR	47uF 4V M	
C302	NEAF0GM-476X	E CAPACITOR	47uF 4V M	
C303	NEAF0GM-476X	E CAPACITOR	47uF 4V M	
C304	NCB30JK-105X	C CAPACITOR	1uF 6.3V K	
C305	NCF31EZ-104X	C CAPACITOR	0.1uF 25V Z	
C306	NCF31EZ-104X	C CAPACITOR	0.1uF 25V Z	
C307	NCF31EZ-104X	C CAPACITOR	0.1uF 25V Z	
C308	NCF31EZ-104X	C CAPACITOR	0.1uF 25V Z	
C309	NCF31EZ-104X	C CAPACITOR	0.1uF 25V Z	
C310	NCB31CK-104X	C CAPACITOR	0.1uF 16V K	
C311	NCF31EZ-104X	C CAPACITOR	0.1uF 25V Z	
C312	NCF31EZ-104X	C CAPACITOR	0.1uF 25V Z	
C313	NCF31EZ-104X	C CAPACITOR	0.1uF 25V Z	
C314	NCF31EZ-104X	C CAPACITOR	0.1uF 25V Z	
C315	NCF31EZ-104X	C CAPACITOR	0.1uF 25V Z	
C316	NCF31EZ-104X	C CAPACITOR	0.1uF 25V Z	
C318	NCF31EZ-104X	C CAPACITOR	0.1uF 25V Z	
C319	NCF31EZ-104X	C CAPACITOR	0.1uF 25V Z	
C320	NCB31CK-104X	C CAPACITOR	0.1uF 16V K	
C321	NCB31CK-104X	C CAPACITOR	0.1uF 16V K	
C322	NCB31CK-104X	C CAPACITOR	0.1uF 16V K	
C323	NCB31CK-104X	C CAPACITOR	0.1uF 16V K	
C324	NCB30JK-105X	C CAPACITOR	1uF 6.3V K	
C325	NDC31HJ-120X	C CAPACITOR	12pF 50V J	

⚠ Symbol No.	Part No.	Part Name	Descrip ion	Local
C326	NDC31HJ-100X	C CAPACITOR	10pF 50V J	
C328	NCB31HK-103X	C CAPACITOR	0.01uF 50V K	
C329	NCF31EZ-104X	C CAPACITOR	0.1uF 25V Z	
C330	NCF31EZ-104X	C CAPACITOR	0.1uF 25V Z	
C331	NCB31CK-333X	C CAPACITOR	0.033uF 16V K	
C332	NCF31EZ-104X	C CAPACITOR	0.1uF 25V Z	
C333	NCF31EZ-104X	C CAPACITOR	0.1uF 25V Z	
C334	NCF31EZ-104X	C CAPACITOR	0.1uF 25V Z	
C335	NCF31EZ-104X	C CAPACITOR	0.1uF 25V Z	
C337	NCB31CK-183X	C CAPACITOR	0.018uF 16V K	
C338	NCB31HK-562X	C CAPACITOR	5600pF 50V K	
C339	NBE20JM-106X	TA E CAPACITOR	10uF 6.3V M	
C340	NCB30JK-105X	C CAPACITOR	1uF 6.3V K	
C341	NCB30JK-105X	C CAPACITOR	1uF 6.3V K	
C347	NCB31CK-104X	C CAPACITOR	0.1uF 16V K	
C348	NCB31CK-104X	C CAPACITOR	0.1uF 16V K	
C349	NCF31EZ-104X	C CAPACITOR	0.1uF 25V Z	
C350	NCB31HK-103X	C CAPACITOR	0.01uF 50V K	
C351	NCB31HK-103X	C CAPACITOR	0.01uF 50V K	
C352	NCB31CK-153X	C CAPACITOR	0.015uF 16V K	
C353	NCB31HK-561X	C CAPACITOR	560pF 50V K	
C354	NCB31HK-561X	C CAPACITOR	560pF 50V K	
C356	NCB30JK-105X	C CAPACITOR	1uF 6.3V K	
C359	NCB30JK-105X	C CAPACITOR	1uF 6.3V K	
C371	NCF31AZ-105X	C CAPACITOR	1uF 10V Z	
C372	NCF31EZ-104X	C CAPACITOR	0.1uF 25V Z	
C373	NCF31EZ-104X	C CAPACITOR	0.1uF 25V Z	
C374	NCF31EZ-104X	C CAPACITOR	0.1uF 25V Z	
C375	NCF31EZ-104X	C CAPACITOR	0.1uF 25V Z	
C376	NCF31EZ-104X	C CAPACITOR	0.1uF 25V Z	
C377	NCF31EZ-104X	C CAPACITOR	0.1uF 25V Z	
C378	NCF31EZ-104X	C CAPACITOR	0.1uF 25V Z	
C379	NCF31EZ-104X	C CAPACITOR	0.1uF 25V Z	
C380	NCB21CK-105X	C CAPACITOR	1uF 16V K	
C381	NCB21AK-225X	C CAPACITOR	2.2uF 10V K	
C382	NCB31HK-471X	C CAPACITOR	470pF 50V K	
C383	NCF31EZ-104X	C CAPACITOR	0.1uF 25V Z	
C386	NCF31EZ-104X	C CAPACITOR	0.1uF 25V Z	
C393	NCB31HK-103X	C CAPACITOR	0.01uF 50V K	
C451	NCF31EZ-104X	C CAPACITOR	0.1uF 25V Z	
C452	NCB31CK-104X	C CAPACITOR	0.1uF 16V K	
C453	NCF31EZ-104X	C CAPACITOR	0.1uF 25V Z	
C454	NCB31HK-103X	C CAPACITOR	0.01uF 50V K	
C455	NCB31HK-103X	C CAPACITOR	0.01uF 50V K	
C551	NCF31EZ-104X	C CAPACITOR	0.1uF 25V Z	
C554	NCF31EZ-104X	C CAPACITOR	0.1uF 25V Z	
C555	NCF31EZ-104X	C CAPACITOR	0.1uF 25V Z	
C556	NCF31AZ-105X	C CAPACITOR	1uF 10V Z	
C557	NCB31HK-102X	C CAPACITOR	1000pF 50V K	
C558	NEAF0GM-476X	E CAPACITOR	47uF 4V M	
C559	NCF31EZ-104X	C CAPACITOR	0.1uF 25V Z	
C560	NCF31EZ-104X	C CAPACITOR	0.1uF 25V Z	
C563	NCF31EZ-104X	C CAPACITOR	0.1uF 25V Z	
C564	NCF31EZ-104X	C CAPACITOR	0.1uF 25V Z	
C701	NCB21CK-105X	C CAPACITOR	1uF 16V K	
C702	NCB31HK-103X	C CAPACITOR	0.01uF 50V K	
C703	NCB30JK-105X	C CAPACITOR	1uF 6.3V K	
C709	NEAF0JM-476X	E CAPACITOR	47uF 6.3V M	
C712	NCF31EZ-104X	C CAPACITOR	0.1uF 25V Z	
C713	NEAF1CM-106X	E CAPACITOR	10uF 16V M	
C714	NCF31EZ-104X	C CAPACITOR	0.1uF 25V Z	
C722	NCF31EZ-104X	C CAPACITOR	0.1uF 25V Z	
R101	NRSA63J-101X	MG RESISTOR	100Ω 1/16W J	
R102	NRSA63J-101X	MG RESISTOR	100Ω 1/16W J	
R103	NRSA63J-562X	MG RESISTOR	5.6kΩ 1/16W J	
R104	NRSA63J-432X	MG RESISTOR	4.3kΩ 1/16W J	
R105	NRS181J-180X	MG RESISTOR	18Ω 1/8W J	
R106	NRSA63J-2R2X	MG RESISTOR	2.2Ω 1/16W J	
R107	NRSA63J-102X	MG RESISTOR	1kΩ 1/16W J	
R108	NRSA63J-471X	MG RESISTOR	470Ω 1/16W J	
R109	NRSA63J-331X	MG RESISTOR	330Ω 1/16W J	
R111	NRSA63J-562X	MG RESISTOR	5.6kΩ 1/16W J	
R112	NRSA63J-432X	MG RESISTOR	4.3kΩ 1/16W J	
R113	NRS181J-180X	MG RESISTOR	18Ω 1/8W J	
R114	NRSA63J-2R2X	MG RESISTOR	2.2Ω 1/16W J	
R115	NRSA63J-102X	MG RESISTOR	1kΩ 1/16W J	
R116	NRSA63J-471X	MG RESISTOR	470Ω 1/16W J	

⚠ Symbol No.	Part No.	Part Name	Descrip ion	Local
R117	NRSA63J-331X	MG RESISTOR	330Ω 1/16W J	
R125	NRSA63J-1R0X	MG RESISTOR	1Ω 1/16W J	
R126	NRSA63J-101X	MG RESISTOR	100Ω 1/16W J	
R127	NRSA63J-432X	MG RESISTOR	4.3kΩ 1/16W J	
R128	NRSA63J-562X	MG RESISTOR	5.6kΩ 1/16W J	
R202	NRSA63J-102X	MG RESISTOR	1kΩ 1/16W J	
R204	NRSA63J-273X	MG RESISTOR	27kΩ 1/16W J	
R205	NRSA63J-273X	MG RESISTOR	27kΩ 1/16W J	
R206	NRSA63J-303X	MG RESISTOR	30kΩ 1/16W J	
R207	NRSA63J-473X	MG RESISTOR	47kΩ 1/16W J	
R213	NRSA63J-103X	MG RESISTOR	10kΩ 1/16W J	
R214	NRSA63J-103X	MG RESISTOR	10kΩ 1/16W J	
R219	NRSA63J-183X	MG RESISTOR	18kΩ 1/16W J	
R220	NRSA63J-243X	MG RESISTOR	24kΩ 1/16W J	
R221	NRSA63J-682X	MG RESISTOR	6 8kΩ 1/16W J	
R251	NRS125J-R39X	MG RESISTOR	0.39Ω 1/2W J	
R259	NRSA63J-103X	MG RESISTOR	10kΩ 1/16W J	
R301	NRS181J-0R0X	MG RESISTOR	0Ω 1/8W J	
R303	NRSA63J-220X	MG RESISTOR	22Ω 1/16W J	
R306	NRSA63J-102X	MG RESISTOR	1kΩ 1/16W J	
R307	NRSA63J-102X	MG RESISTOR	1kΩ 1/16W J	
R308	NRSA63J-103X	MG RESISTOR	10kΩ 1/16W J	
R309	NRSA63J-104X	MG RESISTOR	100kΩ 1/16W J	
R310	NRSA63J-101X	MG RESISTOR	100Ω 1/16W J	
R316	NRSA63J-102X	MG RESISTOR	1kΩ 1/16W J	
R319	NRSA63J-103X	MG RESISTOR	10kΩ 1/16W J	
R324	NRSA63J-331X	MG RESISTOR	330Ω 1/16W J	
R325	NRSA63J-331X	MG RESISTOR	330Ω 1/16W J	
R326	NRSA63J-331X	MG RESISTOR	330Ω 1/16W J	
R327	NRSA63J-331X	MG RESISTOR	330Ω 1/16W J	
R334	NRSA63J-151X	MG RESISTOR	150Ω 1/16W J	
R335	NRSA63J-151X	MG RESISTOR	150Ω 1/16W J	
R336	NRSA63J-151X	MG RESISTOR	150Ω 1/16W J	
R337	NRSA63J-151X	MG RESISTOR	150Ω 1/16W J	
R338	NRSA63J-0R0X	MG RESISTOR	0Ω 1/16W J	
R339	NRSA63J-0R0X	MG RESISTOR	0Ω 1/16W J	
R340	NRSA63D-303X	MG RESISTOR	30kΩ 1/16W D	
R341	NRSA63D-512X	MG RESISTOR	5.1kΩ 1/16W D	
R342	NRSA63D-242X	MG RESISTOR	2.4kΩ 1/16W D	
R345	NRSA63J-221X	MG RESISTOR	220Ω 1/16W J	
R346	NRSA63J-223X	MG RESISTOR	22kΩ 1/16W J	
R347	NRSA63J-203X	MG RESISTOR	20kΩ 1/16W J	
R348	NRSA63J-151X	MG RESISTOR	150Ω 1/16W J	
R349	NRSA63J-151X	MG RESISTOR	150Ω 1/16W J	
R350	NRSA63J-751X	MG RESISTOR	750Ω 1/16W J	
R351	NRSA63J-681X	MG RESISTOR	680Ω 1/16W J	
R352	NRSA63J-105X	MG RESISTOR	1MΩ 1/16W J	
R353	NRSA63J-101X	MG RESISTOR	100Ω 1/16W J	
R357	NRSA63J-221X	MG RESISTOR	220Ω 1/16W J	
R358	NRSA63J-221X	MG RESISTOR	220Ω 1/16W J	
R362	NRSA63J-331X	MG RESISTOR	330Ω 1/16W J	
R367	NRSA63J-221X	MG RESISTOR	220Ω 1/16W J	
R372	NRSA63J-103X	MG RESISTOR	10kΩ 1/16W J	
R373	NRSA63J-103X	MG RESISTOR	10kΩ 1/16W J	
R374	NRSA63J-102X	MG RESISTOR	1kΩ 1/16W J	
R375	NRSA63J-102X	MG RESISTOR	1kΩ 1/16W J	
R376	NRSA63J-102X	MG RESISTOR	1kΩ 1/16W J	
R377	NRSA63J-102X	MG RESISTOR	1kΩ 1/16W J	
R378	NRSA63J-102X	MG RESISTOR	1kΩ 1/16W J	
R383	NRSA63J-101X	MG RESISTOR	100Ω 1/16W J	
R384	NRSA63J-102X	MG RESISTOR	1kΩ 1/16W J	
R385	NRSA63J-102X	MG RESISTOR	1kΩ 1/16W J	
R392	NRSA63J-103X	MG RESISTOR	10kΩ 1/16W J	
R393	NRSA63J-0R0X	MG RESISTOR	0Ω 1/16W J	
R394	NRSA63J-0R0X	MG RESISTOR	0Ω 1/16W J	
R452	NRSA63J-222X	MG RESISTOR	2 2kΩ 1/16W J	
R453	NRSA63J-103X	MG RESISTOR	10kΩ 1/16W J	
R454	NRSA63J-103X	MG RESISTOR	10kΩ 1/16W J	
R455	NRSA63J-103X	MG RESISTOR	10kΩ 1/16W J	
R456	NRSA63J-103X	MG RESISTOR	10kΩ 1/16W J	
R457	NRSA63J-101X	MG RESISTOR	100Ω 1/16W J	
R458	NRSA63J-102X	MG RESISTOR	1kΩ 1/16W J	
R461	NRSA63J-101X	MG RESISTOR	100Ω 1/16W J	
R463	NRSA63J-101X	MG RESISTOR	100Ω 1/16W J	
R464	NRSA63J-101X	MG RESISTOR	100Ω 1/16W J	
R465	NRSA63J-102X	MG RESISTOR	1kΩ 1/16W J	
R535	NRSA63J-473X	MG RESISTOR	47kΩ 1/16W J	
R541	NRSA63J-473X	MG RESISTOR	47kΩ 1/16W J	

⚠ Symbol No.	Part No.	Part Name	Description	Local
R701	NRSA63J-2R2X	MG RESISTOR	2.2Ω 1/16W J	
R703	NRSA63J-471X	MG RESISTOR	470Ω 1/16W J	
R704	NRSA63J-471X	MG RESISTOR	470Ω 1/16W J	
R717	NRSA63J-473X	MG RESISTOR	47kΩ 1/16W J	
R731	NRSA63J-102X	MG RESISTOR	1kΩ 1/16W J	
R732	NRSA63J-471X	MG RESISTOR	470Ω 1/16W J	
CN101	QGF0523F1-25W	CONNECTOR	FFC/FPC (1-25)	
CN201	QGF1016F2-08W	CONNECTOR	FFC/FPC (1-8)	
CN451	QGF1016F2-15W	CONNECTOR	FFC/FPC (1-15)	
CN452	QGA2001F2-02X	CONNECTOR	W-B (1-2)	
CN453	QGA2001F2-03X	CONNECTOR	W-B (1-3)	
CN701	QGF1016F2-28W	CONNECTOR	FFC/FPC (1-28)	
CN702	QGF1016F2-10W	CONNECTOR	FFC/FPC (1-10)	
K351	NQR0502-001X	FERRITE BEADS		
K352	NQR0502-001X	FERRITE BEADS		
K454	NRSA63J-0R0X	MG RESISTOR	0Ω 1/16W J	
K455	NRSA63J-0R0X	MG RESISTOR	0Ω 1/16W J	
K456	NRSA63J-0R0X	MG RESISTOR	0Ω 1/16W J	
K501	NQR0502-001X	FERRITE BEADS		
K710	NQR0022-002X	FERRITE BEADS		
K732	NRSA63J-0R0X	MG RESISTOR	0Ω 1/16W J	
K733	NRSA63J-0R0X	MG RESISTOR	0Ω 1/16W J	
K734	NRSA63J-0R0X	MG RESISTOR	0Ω 1/16W J	
K735	NRSA63J-0R0X	MG RESISTOR	0Ω 1/16W J	
K736	NRSA63J-0R0X	MG RESISTOR	0Ω 1/16W J	
K737	NRSA63J-0R0X	MG RESISTOR	0Ω 1/16W J	
K738	NQR0022-005X	FERRITE BEADS		
K744	NRSA63J-0R0X	MG RESISTOR	0Ω 1/16W J	
K748	NRSA63J-0R0X	MG RESISTOR	0Ω 1/16W J	
K749	NRSA63J-0R0X	MG RESISTOR	0Ω 1/16W J	
K750	NQR0022-002X	FERRITE BEADS		
K752	NQR0022-002X	FERRITE BEADS		
K754	NQR0022-002X	FERRITE BEADS		
K756	NQR0022-002X	FERRITE BEADS		
K758	NQR0022-002X	FERRITE BEADS		
TH301	NAD0025-103X	N THERMISTOR	10kΩ	
X301	NAX0741-001X	CRYSTAL		
X451	NAX0248-001X	C OSCILLATOR	8.000MHz	

Loading board(FMU-SM1-11M) (DX-T5)

Block No. [1][3]

⚠ Symbol No.	Part No.	Part Name	Description	Local
IC1	LB1641	IC		
IC2	LB1641	IC		
D1	MTZJ6.2A-T2	Z DIODE		
C1	QEKC1AM-107Z	E CAPACITOR	100uF 10V M	
C2	QCBB1HK-104Y	C CAPACITOR	0.1uF 50V K	
C3	QFLC1HJ-103Z	M CAPACITOR	0.01uF 50V J	
C5	QFLC1HJ-103Z	M CAPACITOR	0.01uF 50V J	
C6	QCBB1HK-104Y	C CAPACITOR	0.1uF 50V K	
C7	QCBB1HK-104Y	C CAPACITOR	0.1uF 50V K	
CN1	QGF1036F1-15	CONNECTOR	FFC/FPC (1-15)	
CN2	QGB2024K1-07S	CONNECTOR	B-B (1-7)	
CN3	QGB2024J1-07S	CONNECTOR	B-B (1-7)	
SW1	QSW0844-001	PUSH SWITCH		
SW2	QSW0844-001	PUSH SWITCH		
SW3	QSW0844-001	PUSH SWITCH		
SW4	QSW0844-001	PUSH SWITCH		
SW5	QSW0844-001	PUSH SWITCH		
SW6	QSW0854-002	PUSH SW		
SW8	QSW0923-001	DETECT SWITCH		

Cassette switch board(SLC-S401M) -Cassette A (Common)

Block No. [1][4]

⚠ Symbol No.	Part No.	Part Name	Description	Local
IC1	SG-105F3/Z1/	PHOTO SENSER		
IC41	NJM4565D	IC		
IC43	CD4094BE	IC		
CN1	QGF1205F1-09	CONNECTOR	FFC/FPC (1-9)	
CN41	QGF1205F1-09	CONNECTOR	FFC/FPC (1-9)	
CN45	QGF1205F1-25	CONNECTOR	FFC/FPC (1-25)	
CN46	QGF1210G1-09	CONNECTOR	FFC/FPC (1-9)	
CN47	QGF1210G1-10	CONNECTOR	FFC/FPC (1-10)	
CN48	QGF1205F1-06	CONNECTOR	FFC/FPC (1-6)	
FW100	QUM024-07A2Z3	PARA RIBON WIRE		
P1	QNZ0104-001	POST PIN		
SW2	QSW0832-001	CASS.SWITCH		
SW6	QSW0859-001	DETECT SWITCH		

Head amplifier board(SLC-S401M) -Cassette A (Common)

Block No. [1][5]

⚠ Symbol No.	Part No.	Part Name	Description	Local
Q460	2SC3576-JVC-T	TRANSISTOR		
Q461	2SC3576-JVC-T	TRANSISTOR		
Q481	KTA1271/OY/-T	TRANSISTOR		
Q482	KRC107M-T	DIGI TRANSISTOR		
Q485	2SB562/C/-T	TRANSISTOR		
Q486	KTC3199/GL/-T	TRANSISTOR		
D1	1SR139-400-T2	SI DIODE		
D482	1SS133-T2	SI DIODE		
D483	1SS133-T2	SI DIODE		
D485	MTZJ5.1B-T2	Z DIODE		
C449	QEKJ1CM-476Z	E CAPACITOR	47uF 16V M	
C450	QDGB1HK-821Y	C CAPACITOR	820pF 50V K	
C451	QDGB1HK-821Y	C CAPACITOR	820pF 50V K	
C452	QCBB1HK-101Y	C CAPACITOR	100pF 50V K	
C453	QCBB1HK-101Y	C CAPACITOR	100pF 50V K	
C458	QEKJ1AM-107Z	E CAPACITOR	100uF 10V M	
C459	QCBB1HK-391Y	C CAPACITOR	390pF 50V K	
C460	QCBB1HK-103Y	C CAPACITOR	0.01uF 50V K	
C461	QCBB1HK-103Y	C CAPACITOR	0.01uF 50V K	
C462	QEKJ1AM-107Z	E CAPACITOR	100uF 10V M	
C463	QEKJ1HM-225Z	E CAPACITOR	2.2uF 50V M	
C465	QEKJ1AM-107Z	E CAPACITOR	100uF 10V M	
C466	QCBB1HK-391Y	C CAPACITOR	390pF 50V K	
C467	QEKJ1HM-225Z	E CAPACITOR	2.2uF 50V M	
C468	QEKJ1HM-225Z	E CAPACITOR	2.2uF 50V M	
C469	QEKJ1HM-225Z	E CAPACITOR	2.2uF 50V M	
C480	QEKJ1CM-476Z	E CAPACITOR	47uF 16V M	
C481	QEKJ1AM-107Z	E CAPACITOR	100uF 10V M	
C484	QEKJ1EM-475Z	E CAPACITOR	4.7uF 25V M	
C486	QCBB1HK-103Y	C CAPACITOR	0.01uF 50V K	
R371	QRE141J-123Y	C RESISTOR	12kΩ 1/4W J	
R449	QRE141J-221Y	C RESISTOR	220Ω 1/4W J	
R452	QRE141J-563Y	C RESISTOR	56kΩ 1/4W J	
R453	QRE141J-101Y	C RESISTOR	100Ω 1/4W J	
R454	QRE141J-101Y	C RESISTOR	100Ω 1/4W J	
R456	QRE141J-133Y	C RESISTOR	13kΩ 1/4W J	
R457	QRE141J-133Y	C RESISTOR	13kΩ 1/4W J	
R458	QRE141J-472Y	C RESISTOR	4.7kΩ 1/4W J	
R459	QRE141J-473Y	C RESISTOR	47kΩ 1/4W J	
R460	QRE141J-334Y	C RESISTOR	330kΩ 1/4W J	
R461	QRE141J-334Y	C RESISTOR	330kΩ 1/4W J	
R462	QRE141J-101Y	C RESISTOR	100Ω 1/4W J	
R463	QRE141J-563Y	C RESISTOR	56kΩ 1/4W J	

⚠ Symbol No.	Part No.	Part Name	Descrip ion	Local
R465	QRE141J-101Y	C RESISTOR	100Ω 1/4W J	
R466	QRE141J-473Y	C RESISTOR	47kΩ 1/4W J	
R467	QRE141J-473Y	C RESISTOR	47kΩ 1/4W J	
R468	QRE141J-472Y	C RESISTOR	4.7kΩ 1/4W J	
R469	QRE141J-472Y	C RESISTOR	4.7kΩ 1/4W J	
R470	QRE141J-472Y	C RESISTOR	4.7kΩ 1/4W J	
R471	QRE141J-473Y	C RESISTOR	47kΩ 1/4W J	
R480	QRE141J-123Y	C RESISTOR	12kΩ 1/4W J	
R481	QRE141J-183Y	C RESISTOR	18kΩ 1/4W J	
R482	QRE141J-102Y	C RESISTOR	1kΩ 1/4W J	
R483	QRE141J-681Y	C RESISTOR	680Ω 1/4W J	
R485	QRE141J-151Y	C RESISTOR	150Ω 1/4W J	
R486	QRE141J-472Y	C RESISTOR	4.7kΩ 1/4W J	
R487	QRE141J-332Y	C RESISTOR	3.3kΩ 1/4W J	
R488	QRE141J-332Y	C RESISTOR	3.3kΩ 1/4W J	
R489	QRE141J-243Y	C RESISTOR	24kΩ 1/4W J	
VR37	QVP0077-103Z	TRIM RESISTOR	10kΩ	

Cassette board(SLC-S302M)
-Cassette B (Common)

Block No. [1][6]

⚠ Symbol No.	Part No.	Part Name	Descrip ion	Local
IC1	SG-105F3-BB,C	PHOTO SENSER		
D1	1SR139-400-T2	SI DIODE		
R371	QRE141J-123Y	C RESISTOR	12kΩ 1/4W J	
VR37	QVP0077-103Z	TRIM RESISTOR	10kΩ	
CN1	QGF1205F1-09	CONNECTOR	FFC/FPC (1-9)	
FW100	QUM024-07A2Z3	PARA RIBON WIRE		
P1	QNZ0104-001	POST PIN		
SW1	QSW0832-001	CASS.SWITCH		
SW2	QSW0832-001	CASS.SWITCH		
SW5	QSW0832-001	CASS.SWITCH		
SW6	QSW0859-001	DETECT SWITCH		

Head amplifier board(SLC-S302M)
-Cassette B (Common)

Block No. [1][7]

⚠ Symbol No.	Part No.	Part Name	Descrip ion	Local
IC32	HA12238F	IC	R/P Equalizer	
IC33	CD4094BC	IC	Serial to parallel port extension	
Q302	2SC2001/K/-T	TRANSISTOR		
Q305	2SC2001/K/-T	TRANSISTOR		
Q342	KRA111M-T	DIGI TRANSISTOR		
Q343	2SC3576-JVC-T	TRANSISTOR		
Q344	2SC3576-JVC-T	TRANSISTOR		
Q345	2SC3576-JVC-T	TRANSISTOR		
Q346	2SC3576-JVC-T	TRANSISTOR		
Q347	KRC107M-T	DIGI TRANSISTOR		
Q371	KTA1271/OY/-T	TRANSISTOR		
Q372	KRC107M-T	DIGI TRANSISTOR		
Q375	2SB562/C/-T	TRANSISTOR		
Q376	KTC3199/GL/-T	TRANSISTOR		
D340	MTZJ5.1B-T2	Z DIODE		
D375	MTZJ5.1B-T2	Z DIODE		
C101	QDGB1HK-821Y	C CAPACITOR	820pF 50V K	
C102	QDYB1CM-103Y	C CAPACITOR	0.01uF 16V M	
C103	QFLA1HJ-104Z	M CAPACITOR	0.1uF 50V J	

⚠ Symbol No.	Part No.	Part Name	Descrip ion	Local
C104	QCBB1HK-221Y	C CAPACITOR	220pF 50V K	
C105	QCBB1HK-391Y	C CAPACITOR	390pF 50V K	
C106	QERF1HM-225Z	E CAPACITOR	2 2uF 50V M	
C107	QCBB1HK-271Y	C CAPACITOR	270pF 50V K	
C109	QEKJ1EM-475Z	E CAPACITOR	4.7uF 25V M	
C110	QDYB1CM-682Y	C CAPACITOR	6800pF 16V M	
C113	QFLA1HJ-104Z	M CAPACITOR	0.1uF 50V J	
C120	QCSB1HK-4R7Y	C CAPACITOR	4.7pF 50V K	
C121	QCBB1HK-331Y	C CAPACITOR	330pF 50V K	
C201	QDGB1HK-821Y	C CAPACITOR	820pF 50V K	
C202	QDYB1CM-103Y	C CAPACITOR	0 01uF 16V M	
C203	QFLA1HJ-104Z	M CAPACITOR	0.1uF 50V J	
C204	QCBB1HK-221Y	C CAPACITOR	220pF 50V K	
C205	QCBB1HK-391Y	C CAPACITOR	390pF 50V K	
C206	QERF1HM-225Z	E CAPACITOR	2 2uF 50V M	
C207	QCBB1HK-271Y	C CAPACITOR	270pF 50V K	
C209	QEKJ1EM-475Z	E CAPACITOR	4.7uF 25V M	
C210	QDYB1CM-682Y	C CAPACITOR	6800pF 16V M	
C213	QFLA1HJ-104Z	M CAPACITOR	0.1uF 50V J	
C220	QCSB1HK-4R7Y	C CAPACITOR	4.7pF 50V K	
C221	QCBB1HK-331Y	C CAPACITOR	330pF 50V K	
C300	QEKJ1HM-105Z	E CAPACITOR	1uF 50V M	
C301	QEKJ1AM-107Z	E CAPACITOR	100uF 10V M	
C304	QEKJ1CM-106Z	E CAPACITOR	10uF 16V M	
C306	FQETJ1AM-227Z	E CAPACITOR		
C307	QDGB1HK-102Y	C CAPACITOR	1000pF 50V K	
C308	QDXB1CM-152Y	C CAPACITOR	1500pF 16V M	
C310	QCBB1HK-223Y	C CAPACITOR	0 022uF 50V K	
C313	QEKJ1AM-107Z	E CAPACITOR	100uF 10V M	
C314	QCFB1HZ-105Y	C CAPACITOR	1uF 50V Z	
C316	QFG32AJ-223Z	PP CAPACITOR	0 022uF 100V J	
C319	QFLC1HJ-472Z	M CAPACITOR	4700pF 50V J	
C331	QEKJ1CM-476Z	E CAPACITOR	47uF 16V M	
C340	QEKJ1CM-476Z	E CAPACITOR	47uF 16V M	
C341	QEKJ1HM-105Z	E CAPACITOR	1uF 50V M	
C342	QEKJ1CM-476Z	E CAPACITOR	47uF 16V M	
C371	QEKJ1EM-475Z	E CAPACITOR	4.7uF 25V M	
C374	QEKJ1AM-107Z	E CAPACITOR	100uF 10V M	
C376	QDYB1CM-103Y	C CAPACITOR	0 01uF 16V M	
R101	QRE141J-512Y	C RESISTOR	5.1kΩ 1/4W J	
R102	QRE141J-512Y	C RESISTOR	5.1kΩ 1/4W J	
R104	QRE141J-222Y	C RESISTOR	2 2kΩ 1/4W J	
R105	QRE141J-104Y	C RESISTOR	100kΩ 1/4W J	
R106	QRE141J-113Y	C RESISTOR	11kΩ 1/4W J	
R107	QRE141J-912Y	C RESISTOR	9.1kΩ 1/4W J	
R108	QRE141J-273Y	C RESISTOR	27kΩ 1/4W J	
R110	QRE141J-103Y	C RESISTOR	10kΩ 1/4W J	
R116	QRE141J-102Y	C RESISTOR	1kΩ 1/4W J	
R121	QRE141J-153Y	C RESISTOR	15kΩ 1/4W J	
R201	QRE141J-512Y	C RESISTOR	5.1kΩ 1/4W J	
R202	QRE141J-512Y	C RESISTOR	5.1kΩ 1/4W J	
R204	QRE141J-222Y	C RESISTOR	2 2kΩ 1/4W J	
R205	QRE141J-104Y	C RESISTOR	100kΩ 1/4W J	
R206	QRE141J-113Y	C RESISTOR	11kΩ 1/4W J	
R207	QRE141J-912Y	C RESISTOR	9.1kΩ 1/4W J	
R208	QRE141J-273Y	C RESISTOR	27kΩ 1/4W J	
R210	QRE141J-103Y	C RESISTOR	10kΩ 1/4W J	
R216	QRE141J-102Y	C RESISTOR	1kΩ 1/4W J	
R221	QRE141J-153Y	C RESISTOR	15kΩ 1/4W J	
R301	QRE141J-221Y	C RESISTOR	220Ω 1/4W J	
R302	QRE141J-222Y	C RESISTOR	2 2kΩ 1/4W J	
R303	QRE141J-222Y	C RESISTOR	2 2kΩ 1/4W J	
⚠ R304	QRJ146J-101X	UNF C RESISTOR	100Ω 1/4W J	
R305	QRE141J-103Y	C RESISTOR	10kΩ 1/4W J	
R306	QRE141J-472Y	C RESISTOR	4.7kΩ 1/4W J	
⚠ R310	QRJ146J-4R7X	UNF C RESISTOR	4.7Ω 1/4W J	
R313	QRE141J-2R2Y	C RESISTOR	2 2Ω 1/4W J	
R314	QRE141J-153Y	C RESISTOR	15kΩ 1/4W J	
R315	QRE141J-101Y	C RESISTOR	100Ω 1/4W J	
R327	QRE141J-474Y	C RESISTOR	470kΩ 1/4W J	
R335	QRE141J-222Y	C RESISTOR	2 2kΩ 1/4W J	
R336	QRE141J-223Y	C RESISTOR	22kΩ 1/4W J	
R337	QRE141J-332Y	C RESISTOR	3.3kΩ 1/4W J	
R338	QRE141J-392Y	C RESISTOR	3 9kΩ 1/4W J	
R339	QRE141J-104Y	C RESISTOR	100kΩ 1/4W J	
R340	QRE141J-681Y	C RESISTOR	680Ω 1/4W J	
R341	QRE141J-123Y	C RESISTOR	12kΩ 1/4W J	

⚠ Symbol No.	Part No.	Part Name	Description	Local
R342	QRE141J-243Y	C RESISTOR	24kΩ 1/4W J	
R343	QRE141J-183Y	C RESISTOR	18kΩ 1/4W J	
R344	QRE141J-472Y	C RESISTOR	4.7kΩ 1/4W J	
R345	QRE141J-472Y	C RESISTOR	4.7kΩ 1/4W J	
R346	QRE141J-472Y	C RESISTOR	4.7kΩ 1/4W J	
R347	QRE141J-103Y	C RESISTOR	10kΩ 1/4W J	
⚠ R353	QRZ9005-100X	FUSI RESISTOR	10Ω	
R372	QRE141J-102Y	C RESISTOR	1kΩ 1/4W J	
R375	QRE141J-151Y	C RESISTOR	150Ω 1/4W J	
R376	QRE141J-472Y	C RESISTOR	4.7kΩ 1/4W J	
VR31	QVP0008-203Z	TRIM RESISTOR	20kΩ	
L301	QQR1118-002	OSC COIL(BIAS)		
L303	QQL244K-100Z	COIL	10uH K	
CN31	QGF1205F1-06	CONNECTOR	FFC/FPC (1-6)	
CN32	QGF1205F1-09	CONNECTOR	FFC/FPC (1-9)	
CN33	QGF1205F1-09	CONNECTOR	FFC/FPC (1-9)	
CN34	QGF1201F3-10	CONNECTOR	FFC/FPC (1-10)	
H32	GV40397-002A	IC HOLDER		

< MEMO >

Packing materials and accessories parts list

Block No. M 4 M M

(DX-T9)

No additional / supplemental order of WARRANTY CARDs are available

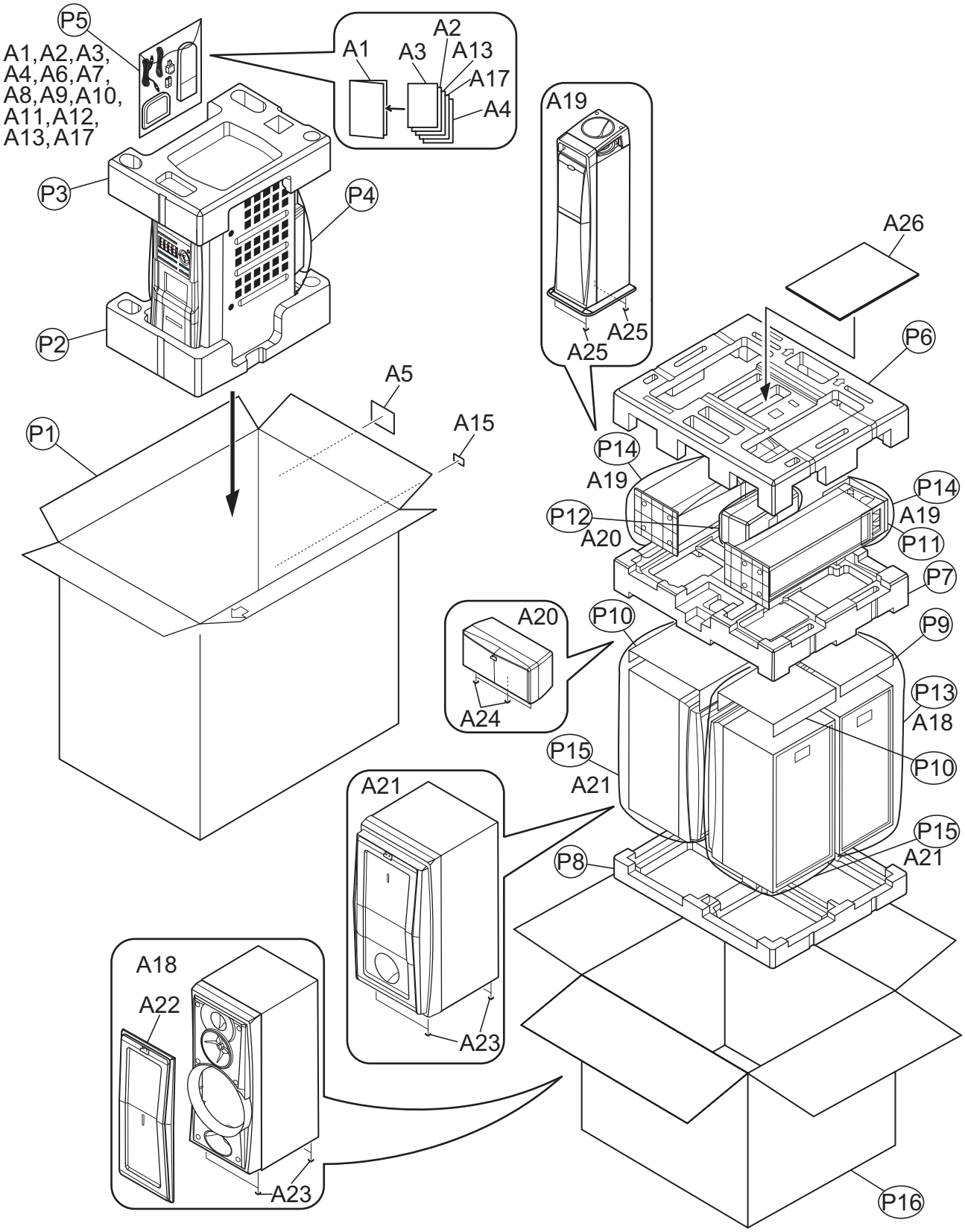

Packing and Accessories (DX-T9)

Block No. [M][4][M][M]

⚠	Symbol No.	Part No.	Part Name	Description	Local
	A 1	GVT0147-003A	INST BOOK	ENG	A
	A 1	GVT0147-001A	INST BOOK	ENG CHI(PEKIN)	UN,US
	A 1	GVT0147-004A	INST BOOK	ENG SPA POR	UW
	A 1	GVT0147-002A	INST BOOK	ENG ARA PER	UG,UX
	A 2	GV40634-001A	DEMO SHEET		
	A 3	GV40633-001A	KARAOKE SHEET		UG,UN,US,UX
	A 4	GV40639-001A	ERRATA SHEET		UG,UN,US,UX
	A 5	CL0020-001	COMPUTER LABEL		
	A 6	QAL0014-001	AM LOOP ANT		
⚠	A 7	QAM0112-002	PLUG ADAPTOR		UN,US,UW
	A 8	QAM0216-001	SIGNAL CORD		
	A 9	RM-SDXT9U	REMOCON		
	A 10	QAL0457-001	ANT.WIRE		
	A 11	----------	BATTERY	(x2)	
	A 12	----------	WARRANTY CARD	BT-56012-1	A
	A 13	GV40636-001A	VOL-SEL.SHEET		UN
	A 15	GV40641-002A	NOM LABEL		UW
	A 15	GV40597-001A	SASO LABEL		UX
	A 17	GV40633-002A	KARAOKE SHEET		UG,UX
	A 18	ASL8MDXT7-EB10	SPEAKER BOX	MAIN SPEAKER(x2)	
	A 19	ASL8SDXT9-EB10	SPEAKER BOX	SURROUND SPEAKER(x2)	
	A 20	ASL8CDXT9-EB10	SPEAKER BOX	CENTER SPEAKER	
	A 21	ASL8WDXT9-EB10	SPEAKER BOX	SUBWOOFER(x2)	
	A 22	ASW803302-0001	SPK NET ASSY	(x2)	
	A 23	DUF803001-0001	LEG CUSHION	(x16)	
	A 24	DUF803001-0002	LEG CUSHION	(x3)	
	A 25	DUF803001-0003	LEG CUSHION	(x8)	
	A 26	YOM800001-0243	USER MANUAL		A,UN,US,UW
	A 26	YOM800001-0244	USER MANUAL		UG,UX
	P 1	GV20352-004A	CARTON ASSY.		UN,US
	P 1	GV20352-005A	CARTON ASSY.		A,UW
	P 1	GV20352-007A	CARTON ASSY.		UX
	P 1	GV20352-006A	CARTON ASSY.		UG
	P 2	GV10272-001A	CUSHION (BOTTOM)		
	P 3	GV10271-001A	CUSHION (TOP)		
	P 4	QPC07507530P	POLY BAG	75cm x 75cm	
	P 5	QPC02503515P	POLY BAG	25cm x 35cm	
	P 6	ITF830347-0001	TOP CUSHION		
	P 7	ITF830347-0002	CENTER CUSHION		
	P 8	ITF830347-0003	BOTTOM CUSHION		
	P 9	IVH803001-0006	MIRAMAT SHEET	(x2)	
	P 10	IVH803001-0007	MIRAMAT SHEET	(x2)	
	P 11	IVH803001-0008	MIRAMAT SHEET	(x2)	
	P 12	IVA803101-0023	HDPE BAG	CENTER SPEAKER	
	P 13	IVA803101-0024	HDPE BAG	MAIN SPEAKER(x2)	
	P 14	IVA803101-0027	HDPE BAG	SURROUND SPEAKER(x2)	
	P 15	IVA803101-0025	HDPE BAG	SUBWOOFER(x2)	
	P 16	ICC8PDXT9-EB10	PACK NG CASE		UG,UN,US
	P 16	ICC8PDXT9-EB30	PACK NG CASE		A,UX,UW

Packing materials and accessories parts list

Block No. M 5 M M

(DX-T7)

No additional / supplemental order of WARRANTY CARDs are available

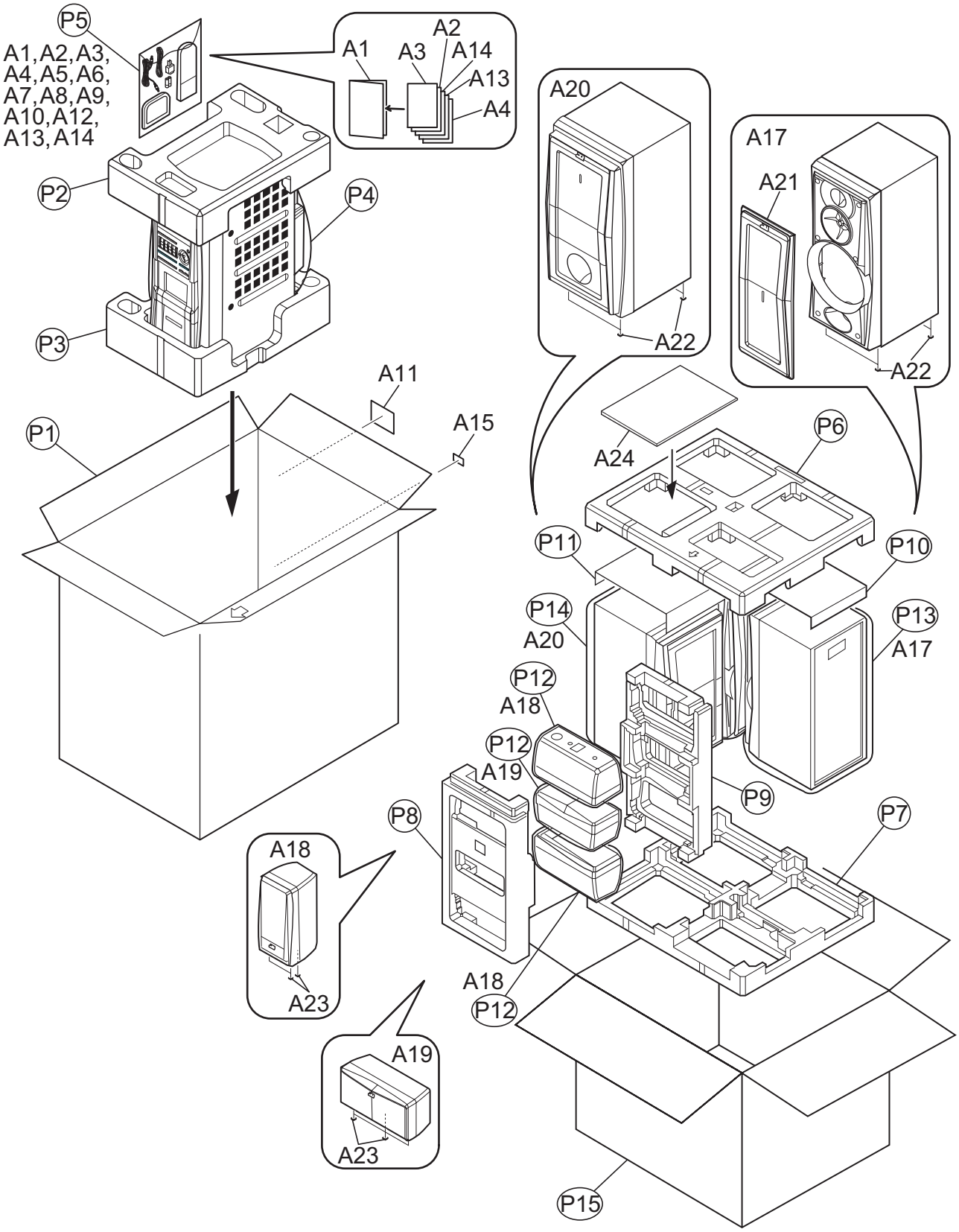

Packing and Accessories (DX-T7)

Block No. [M][5][M][M]

⚠	Symbol No.	Part No.	Part Name	Description	Local
	A 1	GVT0147-003A	INST BOOK	ENG	A
	A 1	GVT0147-001A	INST BOOK	ENG CHI(PEKIN)	UN,US
	A 1	GVT0147-004A	INST BOOK	ENG SPA POR	UW
	A 1	GVT0147-002A	INST BOOK	ENG ARA PER	UG,UX
	A 2	GV40634-001A	DEMO SHEET		
	A 3	GV40633-001A	KARAOKE SHEET		UG,UN,US,UX
	A 4	GV40639-001A	ERRATA SHEET		UG,UN,US,UX
	A 5	QAL0014-001	AM LOOP ANT		
⚠	A 6	QAM0112-002	PLUG ADAPTOR		UN,US,UW
	A 7	QAM0216-001	SIGNAL CORD		
	A 8	RM-SDXT9U	REMOCON		
	A 9	QAL0457-001	ANT.WIRE		
	A 10	----------	BATTERY	(x2)	
	A 11	CL0020-001	COMPUTER LABEL		
	A 12	----------	WARRANTY CARD	BT-56012-1	A
	A 13	GV40633-002A	KARAOKE SHEET		UG,UX
	A 14	GV40636-001A	VOL-SEL.SHEET		UN
	A 15	GV40641-002A	NOM LABEL		UW
	A 17	ASL8MDXT7-EB10	SPEAKER BOX	MAIN SPEAKER(x2)	
	A 18	ASL8SDXT7-EB10	SPEAKER BOX	SURROUND SPEAKER(x2)	
	A 19	ASL8CDXT7-EB10	SPEAKER BOX	CENTER SPEAKER	
	A 20	ASL8WDXT7-EB10	SPEAKER BOX	SUBWOOFER	
	A 21	ASW803302-0001	SPK NET ASSY	(x2)	
	A 22	DUF803001-0001	LEG CUSHION	(x12)	
	A 23	DUF803001-0002	LEG CUSHION	(x9)	
	A 24	YOM800001-0241	USER MANUAL		A,UN,US,UW
	A 24	YOM800001-0242	USER MANUAL		UG,UX
	P 1	GV20353-004A	CARTON ASSY.		UN,US
	P 1	GV20353-005A	CARTON ASSY.		A,UW
	P 1	GV20353-006A	CARTON ASSY.		UG,UX
	P 2	GV10271-001A	CUSHION (TOP)		
	P 3	GV10272-001A	CUSHION (BOTTOM		
	P 4	QPC07507530P	POLY BAG	75cm x 75cm	
	P 5	QPC02503515P	POLY BAG	25cm x 35cm	
	P 6	ITF830346-0001	TOP CUSHION		
	P 7	ITF830346-0002	BOTTOM CUSHION		
	P 8	ITF830346-0003	CUSHION		
	P 9	ITF830346-0004	CUSHION		
	P 10	IVH803001-0006	MIRAMAT SHEET	MAIN SPEAKER(x2)	A,UN,US,UW
	P 11	IVH803001-0007	MIRAMAT SHEET	SUBWOOFER	UG,UX
	P 12	IVA803101-0023	HDPE BAG	CENTER&SURROUND SPEAKER(x3)	
	P 13	IVA803101-0024	HDPE BAG	MAIN SPEAKER(x2)	
	P 14	IVA803101-0025	HDPE BAG	SUBWOOFER	
	P 15	ICC8PDXT7-EB10	PACK NG CASE		UG,UN,US
	P 15	ICC8PDXT7-EB30	PACK NG CASE		A,UW,UX

Packing materials and accessories parts list

(DX-T5)

Block No. M 6 M M

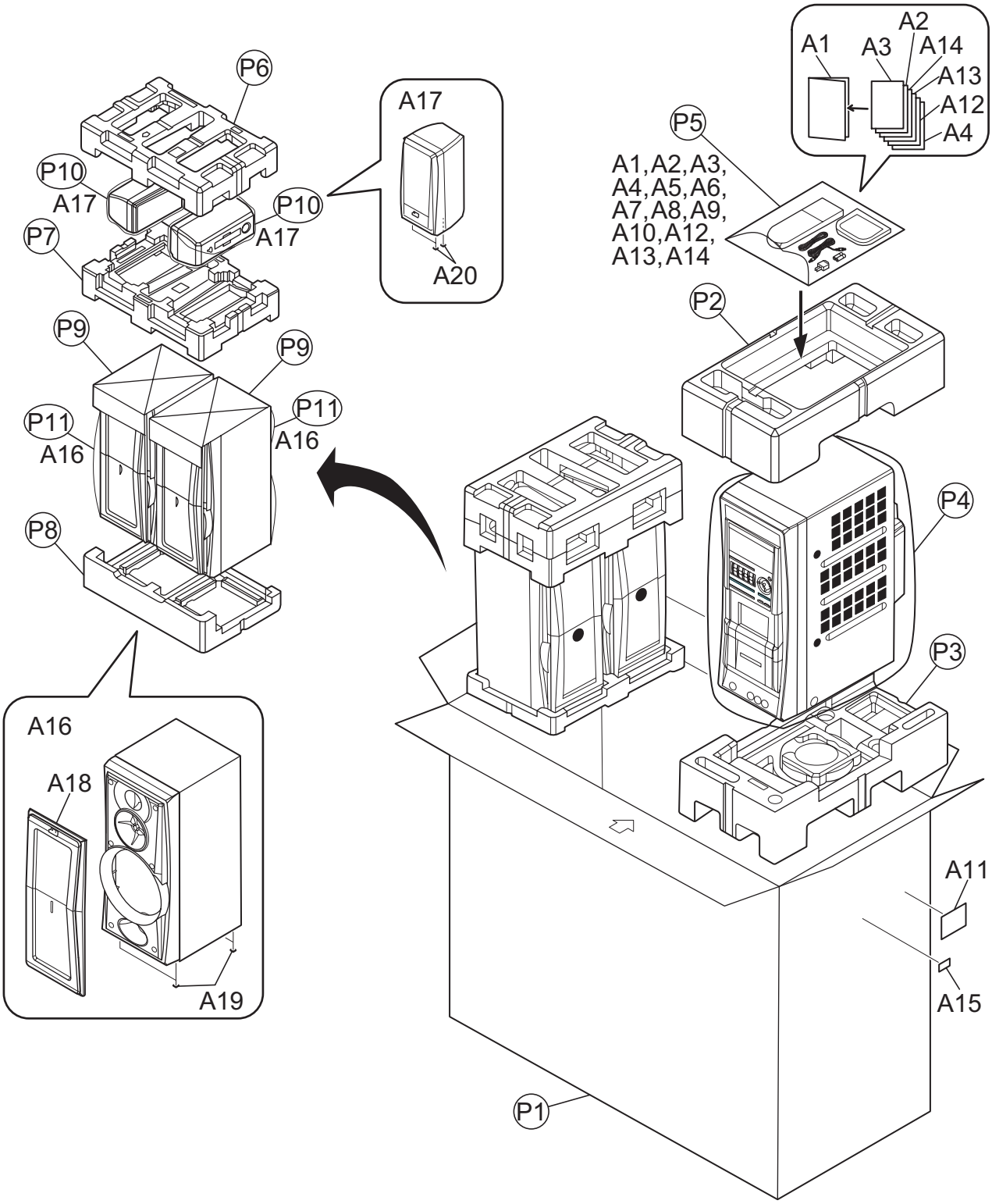

Packing and Accessories (DX-T5)

Block No. [M][6][M][M]

⚠	Symbol No.	Part No.	Part Name	Description	Local
	A 1	GVT0146-001A	INST BOOK	ENG CHI(PEKIN)	UN,US
	A 1	GVT0146-004A	INST BOOK	ENG SPA POR	UW
	A 1	GVT0146-002A	INST BOOK	ENG ARA PER	UG,UX
	A 1	GVT0146-005A	INST BOOK	SPA	UY
	A 2	GV40634-001A	DEMO SHEET		
	A 3	GV40633-001A	KARAOKE SHEET		UG,UN,US,UX
	A 4	GV40639-001A	ERRATA SHEET		UG,UN,US,UX
	A 5	QAL0014-001	AM LOOP ANT		
⚠	A 6	QAM0112-002	PLUG ADAPTOR		UN,US,UW
	A 7	QAM0216-001	SIGNAL CORD		
	A 8	RM-SDXT5U	REMOCON		
	A 9	QAL0457-001	ANT.WIRE		
	A 10	----------	BATTERY	(x2)	
	A 11	CL0020-001	COMPUTER LABEL		
	A 12	GV40638-001A	ERRATA SHEET		UG
	A 13	GV40633-002A	KARAOKE SHEET		UG,UX
	A 14	GV40636-001A	VOL-SEL.SHEET		UN
	A 15	GV40641-002A	NOM LABEL		UW
	A 15	LV30259-003A	UY LABEL		UY
	A 16	ASL8MDXT5-EB10	SPEAKER BOX	MAIN SPEAKER(x2)	
	A 17	ASL8SDXT5-EB10	SPEAKER BOX	SURROUND SPEAKER(x2)	
	A 18	ASW803302-0001	SPK NET ASSY	(x2)	
	A 19	DUF803001-0001	LEG CUSHION	(x8)	
	A 20	DUF803001-0002	LEG CUSHION	SURROUND SPEAKER(x6)	
	P 1	GV20354-008A	CARTON ASSY.		UN,US
	P 1	GV20354-009A	CARTON ASSY.		UG,UX
	P 1	GV20354-007A	CARTON ASSY.		UW,UY
	P 2	GV10269-001A	CUSHION (TOP)		
	P 3	GV10270-001A	CUSHION (BOTTOM)		
	P 4	QPC07507530P	POLY BAG	75cm x 75cm	
	P 5	QPC02503515P	POLY BAG	25cm x 35cm	
	P 6	ITF830345-0001	TOP CUSHION		
	P 7	ITF830345-0002	CENTER CUSHION		
	P 8	ITF830345-0003	BOTTOM CUSHION		
	P 9	IVH803001-0006	MIRAMAT SHEET	(x2)	
	P 10	IVA803101-0023	HDPE BAG	SURROUND SPEAKER(x2)	
	P 11	IVA803101-0024	HDPE BAG	(x2)	

JVC

SCHEMATIC DIAGRAMS

COMPACT COMPONENT SYSTEM

DX-T9, DX-T7
DX-T5

CD-ROM No.SML200505

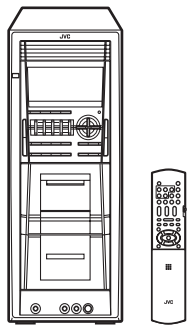

(CA DXT9,CA DXT7)

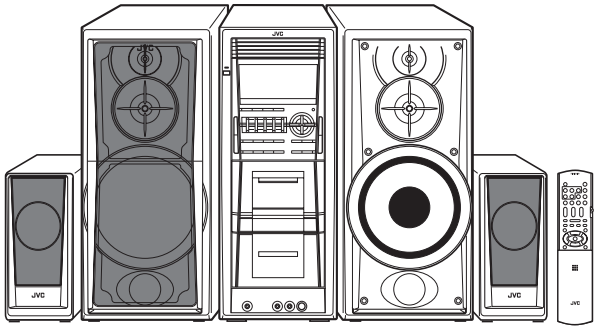

(SP XST5) (SP XT5) (CA DXT5) (SP XT5) (SP XST5)

ACTIVE BASS EXTENSION

DX-T9, DX-T7	
Area suffix	
A	Australia
US	Singapore
UW	Brazil,Mexico,Peru
UX	Saudi Arabia
UG	Turkey,South Africa,Egypt
UN	Asean

DX-T5	
Area suffix	
US	Singapore
UW	Brazil,Mexico,Peru
UX	Saudi Arabia
UY	Argentina
UG	Turkey,South Africa,Egypt
UN	Asean

	Main body	Front speaker	Subwoofer	Surround speaker	Center speaker
DX T9	CA DXT9	SP XT9	SP WT9	SP XST9	SP XCT9
DX T7	CA DXT7	SP XT7	SP WT7	SP XST7	SP XCT7
DX T5	CA DXT5	SP XT5		SP XST5	SP XCT5

Lead free solder used in the board (material : Sn-Ag-Cu, melting point : 219 Centigrade)

Contents

Block diagram (For DX-T9) ---------- 2-1
Standard schematic diagrams (For DX-T9) ---------- 2-2
Printed circuit boards (For DX-T9) ---------- 2-11
Block diagram (For DX-T7) ---------- 2-16
Standard schematic diagrams (For DX-T7) ---------- 2-17
Printed circuit boards (For DX-T7) ---------- 2-26
Block diagram (For DX-T5) ---------- 2-31
Standard schematic diagrams (For DX-T5) ---------- 2-32
Printed circuit boards (For DX-T5) ---------- 2-41 to 46

COPYRIGHT ⓒ2005 Victor Company of Japan, Limited.

No.MB368SCH
2005/5

In regard with component parts appearing on the silk-screen printed side (parts side) of the PWB diagrams, the parts that are printed over with black such as the resistor (▬), diode (▮) and ICP (●) or identified by the "⚠" mark nearby are critical for safety.

Block diagram (For DX-T9)

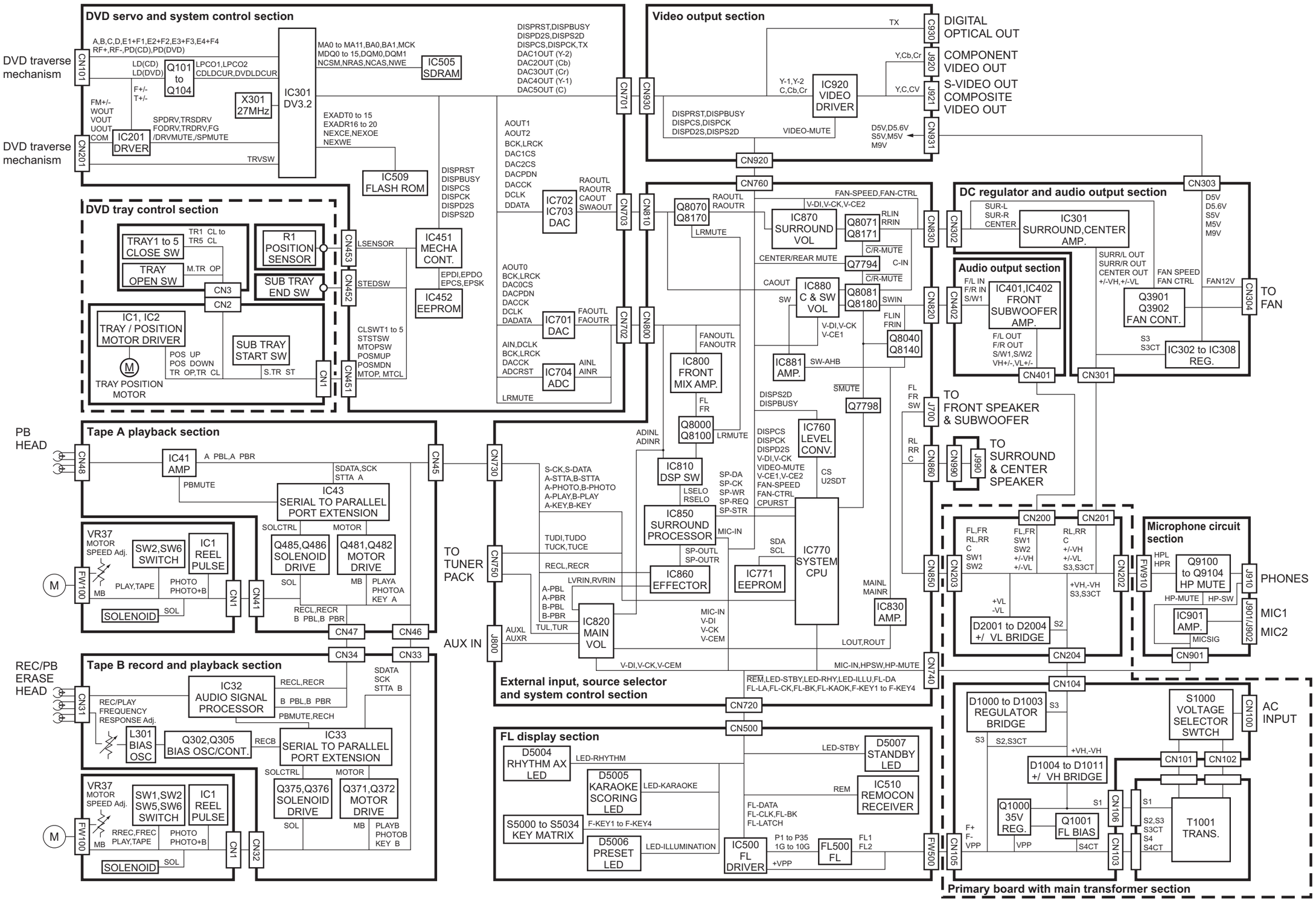

Standard schematic diagrams (For DX-T9)

■ Primary board with main transformer section

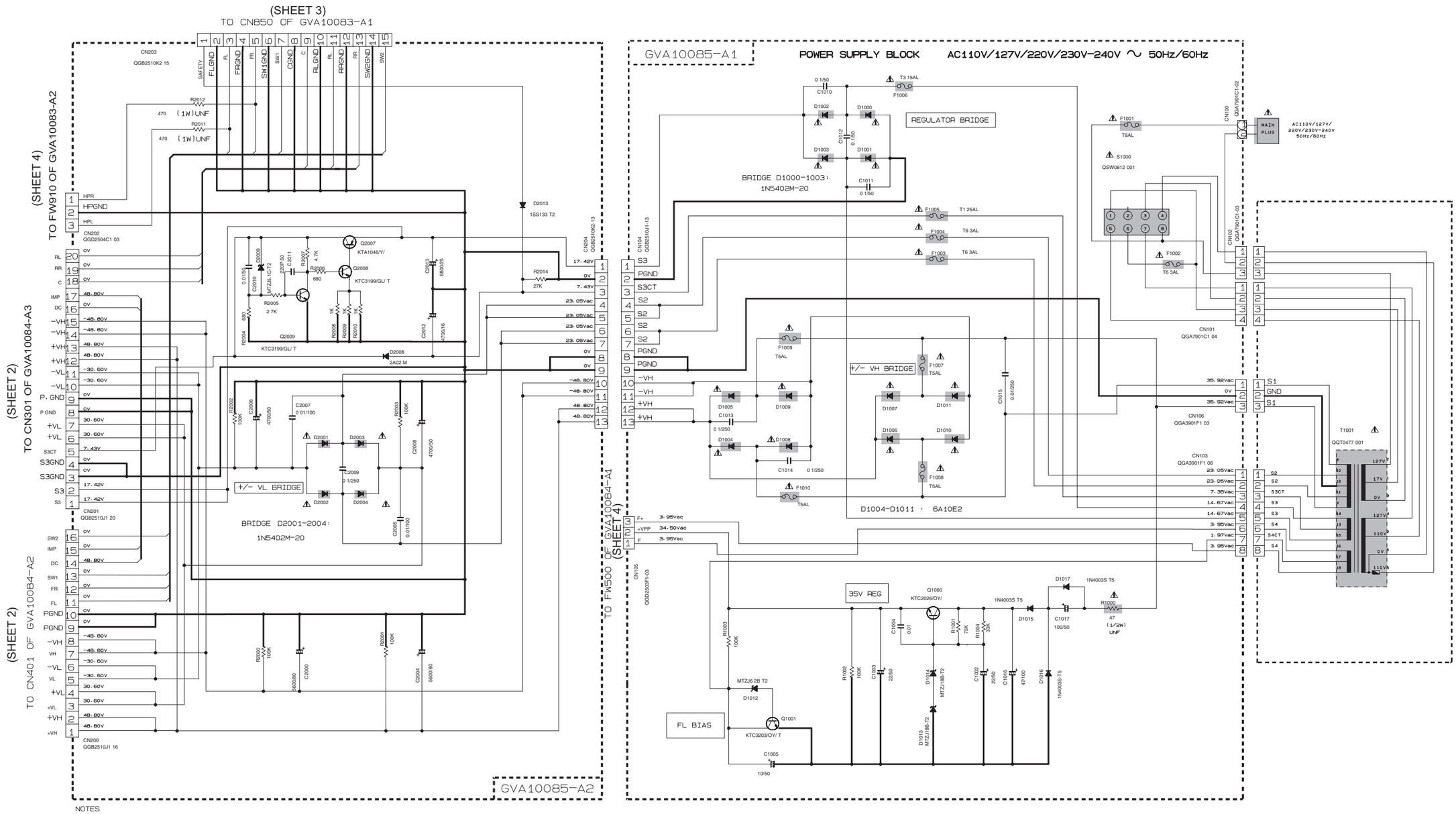

NOTES

1. VOLTAGES ARE DC-MEASURED WITH A DIGITAL VOLT METER OR OSCILLOSCOPE WITHOUT INPUT SIGNAL.
   CONDITION —— AUX MODE. VOL MIN. BASS OFF
2. UNLESS OTHERWISE SPECIFIED
   RESISTORS ARE 1/4W ±5% CARBON RESISTOR.
   ALL RESISTANCE VALUES ARE IN OHM(Ω).
   ALL CAPACITORS ARE CERAMIC CAPACITOR OR MYLAR CAPACITOR.
   ALL CAPACITANCE VALUES ARE IN μF(=pF).
   ALL INDUCTANCE VALUES ARE IN μH(=mH).
   ALL E.CAPACITORS ARE SHOWN IN THE FORM OF CAPACITANCE (μF)/RATED VOLTAGE (V).
   ALL DIODES ARE 1SS119-041-T2

VOLTAGE SELECTOR LOCATION

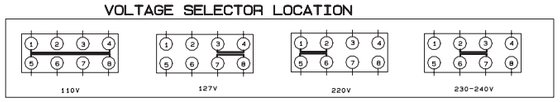

EXPLANATION OF OVERALL SCHEMATIC	
MODEL	DX-T9

SHEET NUMBER	
1	PRIMARY BOARD WITH MAIN TRANSFORMER
2	DC REGULATOR/AUDIO OUTPUT
3	EXTERNAL INPUT. SOURCE SELECTOR SYSTEM CONTROL
4	VIDEO OUTPUT. MIC CIRCUIT FL DISPLAY. USER CONTROL KEYS
5	TAPEA-SLC-S401M. PLAYBACK ONLY.
6	TAPEB-SLCS302M. RECORD PLAYBACK.
7	DVD SERVO AND SYSTEM CONTROL(1/2)
8	DVD SERVO AND SYSTEM CONTROL(2/2)

MODEL VERSIONS	COUNTRY CODES	
DX-T5: UW. UY. US. UN. UX. UG	UW	- SOUTH AMERICA
	UY	- ARGENTINA
DX-T7: US. UN. UX. UG. UW. A	US	- SINGAPORE
	UN	- INDONESIA
	UX	- SAUDI ARABIA
DX-T9: UW. US. UN. UX. A. UG	A	- AUSTRALIA
	UG	- EGYPT. SOUTH AFRICA. TURKEY

⚠ Parts are safety assurance parts. When replacing those parts make sure to use the specified one.

SHEET 1

■ DC regulator and audio output section

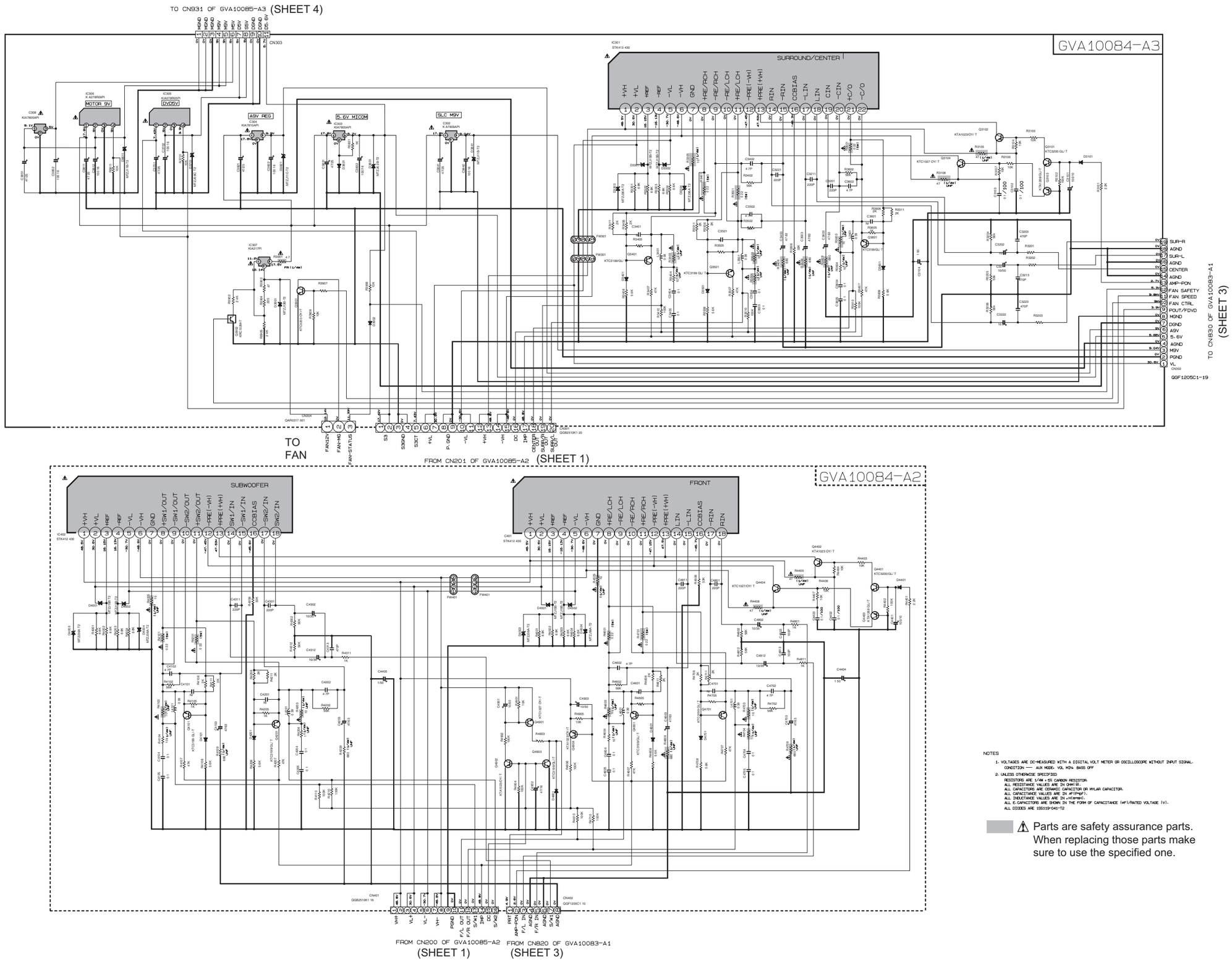

NOTES

1. VOLTAGES ARE DC-MEASURED WITH A DIGITAL VOLT METER OR OSCILLOSCOPE WITHOUT INPUT SIGNAL.
   CONDITION —— AUX MODE- VOL M24 BASS OFF
2. UNLESS OTHERWISE SPECIFIED
   RESISTORS ARE 1/4W ±5% CARBON RESISTOR.
   ALL RESISTANCE VALUES ARE IN OHM(Ω).
   ALL CAPACITORS ARE CERAMIC CAPACITOR OR MYLAR CAPACITOR.
   ALL CAPACITANCE VALUES ARE IN μF(PμF).
   ALL INDUCTANCE VALUES ARE IN μH(mμH).
   ALL E-CAPACITORS ARE SHOWN IN THE FORM OF CAPACITANCE (μF)/RATED VOLTAGE (V).
   ALL DIODES ARE 1SS119-041-T2

⚠ Parts are safety assurance parts. When replacing those parts make sure to use the specified one.

SHEET 2

■ External input, source selector and system control section

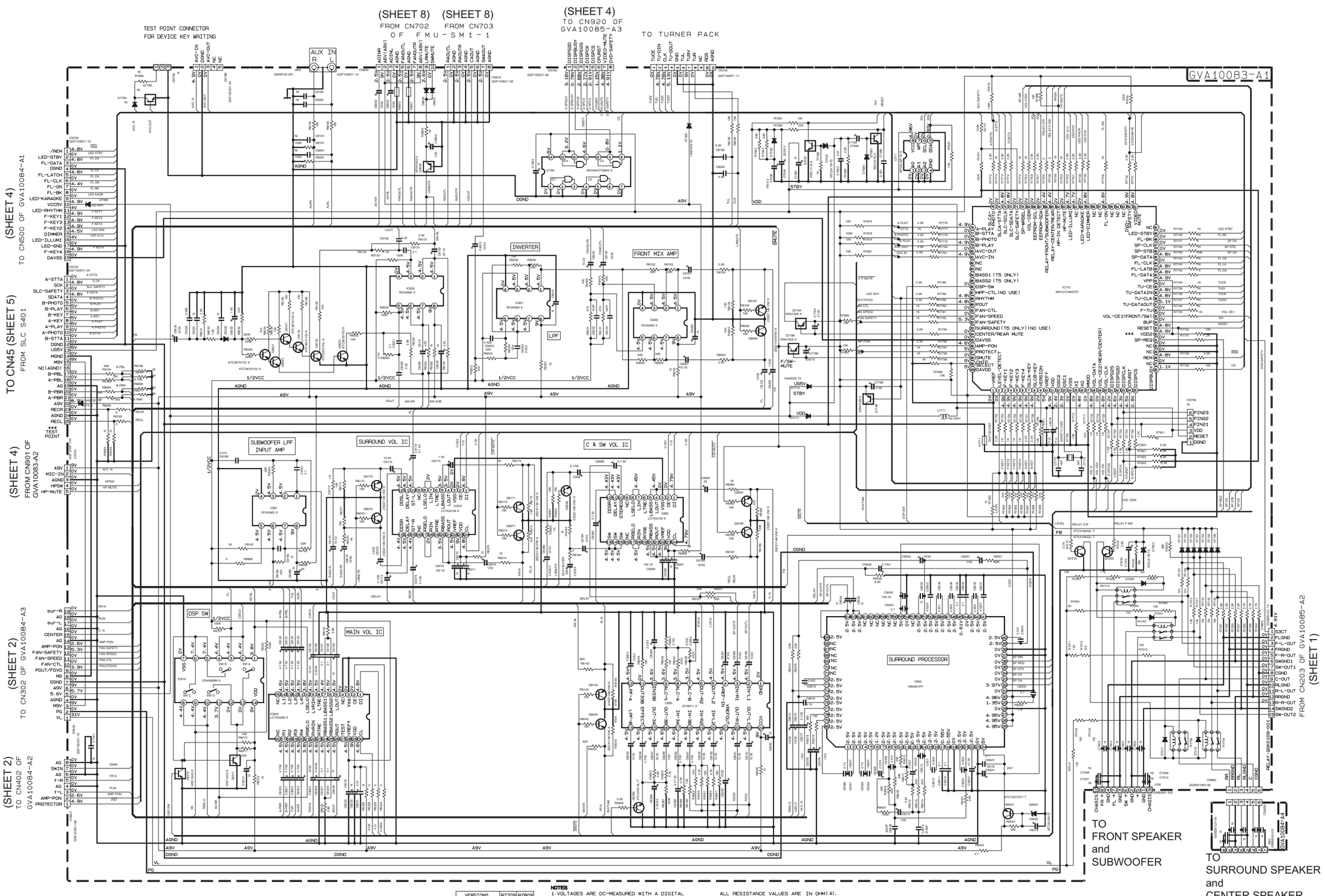

VERSIONS	R7709	R7809
UY	10K	3.3K
UX- UG	10K	15K
UW	10K	27K
US- UN- A	10K	–

NOTES

1. VOLTAGES ARE DC-MEASURED WITH A DIGITAL VOLT METER OR OSCILLOSCOPE WITHOUT INPUT SIGNAL. CONDITION ---- CD STOP MODE
2. UNLESS OTHERWISE SPECIFIED.
   ALL RESISTORS ARE 1/4W ± 5% CARBON FILM RESISTOR OR 0.063W ±5% THICK FILM CHIP RESISTOR
   ALL CAPACITORS ARE CERAMIC CAPACITOR OR MYLAR CAPACITOR.

ALL RESISTANCE VALUES ARE IN OHM(Ω).
ALL CAPACITANCE VALUES ARE IN F(P=pF).
ALL E.CAPACITORS ARE SHOWN IN THE FORM OF CAPACITANCE(μF)/RATED VOLTAGE (V).
ALL INDUCTANCE VALUES ARE IN μH(m=mH).
ALL DIODES ARE 1SS119-041-T2
ALL FERRITE BEADS ARE NGR0007-002X

SHEET 3

■ Video output, microphone circuit, FL display and user control keys section

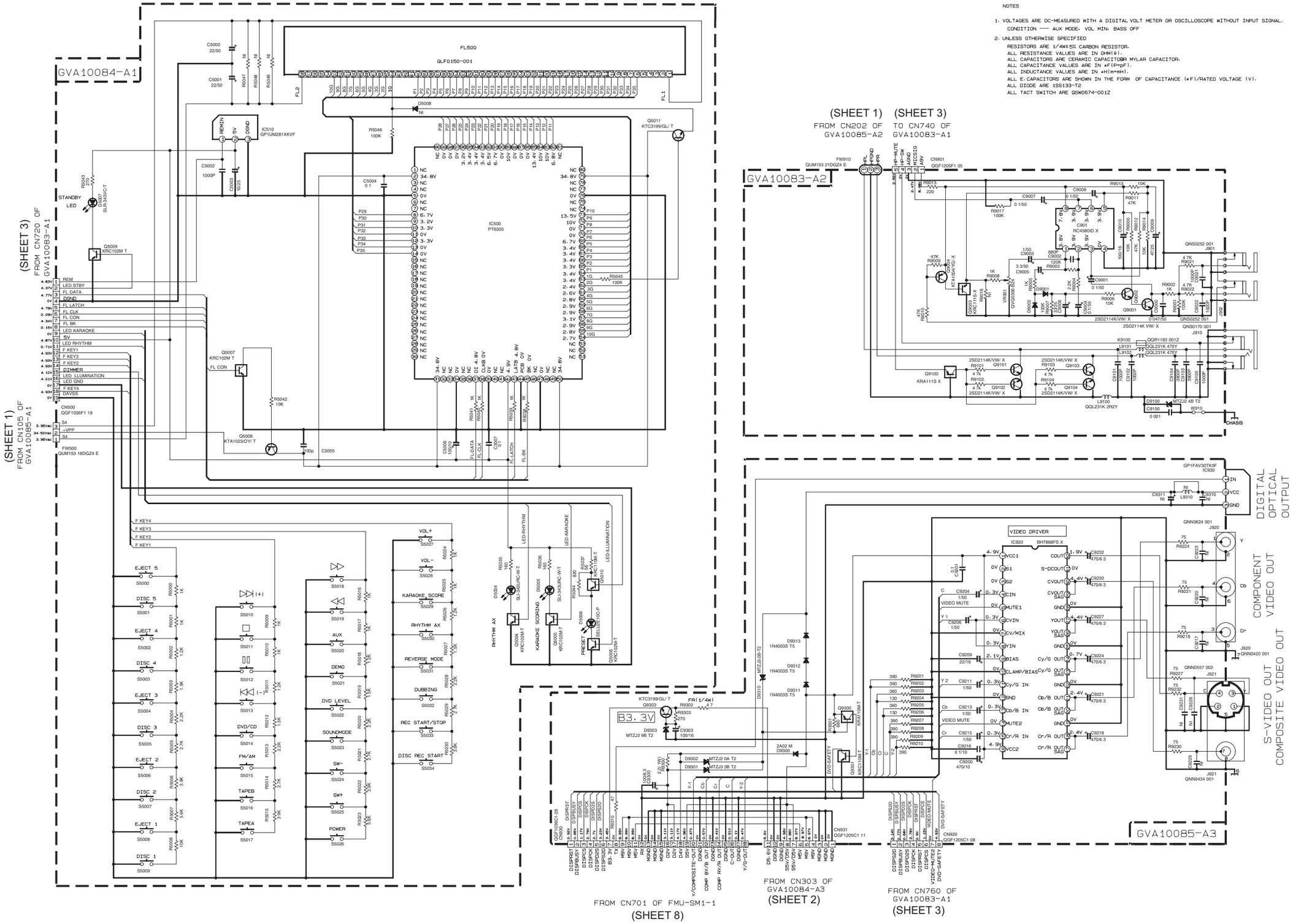

NOTES

1. VOLTAGES ARE DC-MEASURED WITH A DIGITAL VOLT METER OR OSCILLOSCOPE WITHOUT INPUT SIGNAL.
   CONDITION ---- AUX MODE, VOL MIN, BASS OFF
2. UNLESS OTHERWISE SPECIFIED
   RESISTORS ARE 1/4W±5% CARBON RESISTOR.
   ALL RESISTANCE VALUES ARE IN Ω=M(Ω).
   ALL CAPACITORS ARE CERAMIC CAPACITOR OR MYLAR CAPACITOR.
   ALL CAPACITANCE VALUES ARE IN ±F(P=pF).
   ALL INDUCTANCE VALUES ARE IN ±H(m=mH).
   ALL E.CAPACITORS ARE SHOWN IN THE FORM OF CAPACITANCE (±F)/RATED VOLTAGE (V).
   ALL DIODE ARE 1SS133-T2
   ALL TACT SWITCH ARE QSW0674-001Z

SHEET 4

■ Tape A playback section

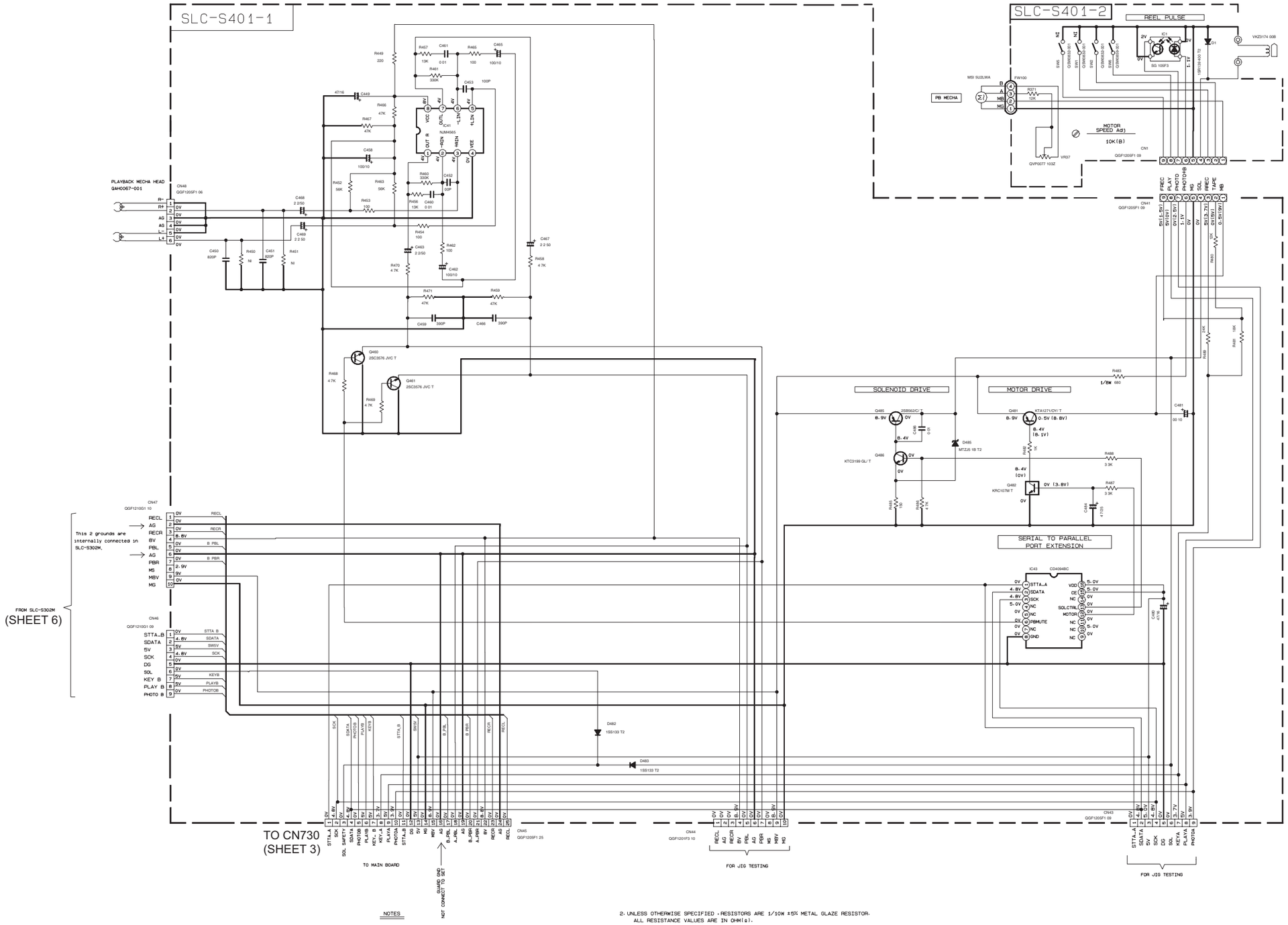

NOTES

1. VOLTAGES ARE DC-MEASURED WITH A DIGITAL VOLT METER OR OSCILLOSCOPE WITHOUT INPUT SIGNAL.
CONDITION : MECHA STOP MODE

2. UNLESS OTHERWISE SPECIFIED : RESISTORS ARE 1/10W ±5% METAL GLAZE RESISTOR.
ALL RESISTANCE VALUES ARE IN OHM(Ω).
ALL CAPACITORS ARE CERAMIC CAPACITOR OR MYLAR CAPACITOR.
ALL CAPACITANCE VALUES ARE IN μF(P=pF).
ALL INDUCTANCE VALUES ARE IN μH(m=mH).
ALL E.CAPACITORS ARE SHOWN IN THE FORMOF CAPACITANCE (μF)/RATED VOLTAGE (V).
POLYPROPYLENE CAPACITOR

SHEET 5

■ Tape B record and playback section

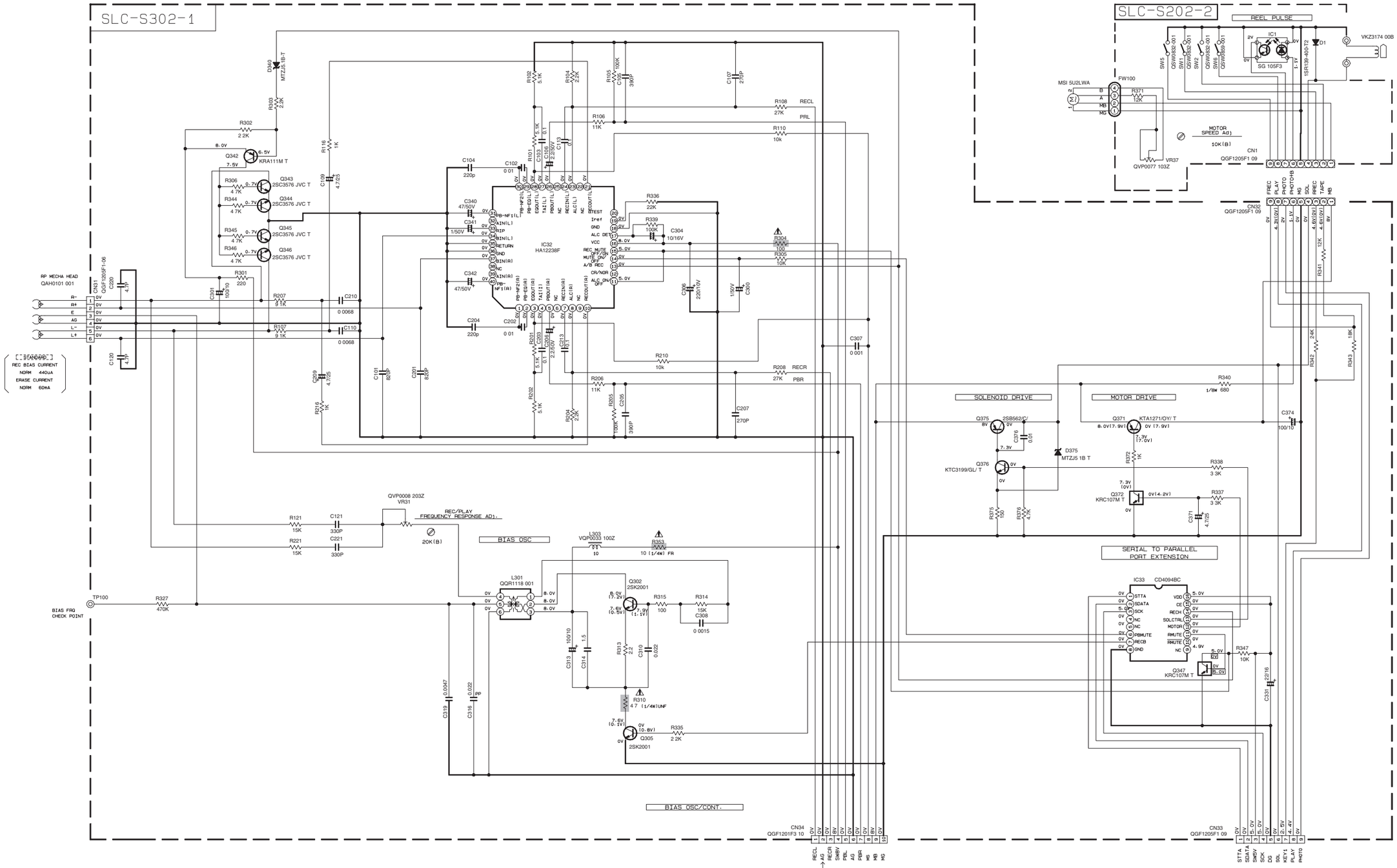

NOTES

1. VOLTAGES ARE DC-MEASURED WITH A DIGITAL VOLT METER OR OSCILLOSCOPE WITHOUT INPUT SIGNAL.
CONDITION : MECHA STOP MODE

2. UNLESS OTHERWISE SPECIFIED : RESISTORS ARE 1/10W ±5% METAL GLAZE RESISTOR.
ALL RESISTANCE VALUES ARE IN OHM(Ω).
ALL CAPACITORS ARE CERAMIC CAPACITOR OR MYLAR CAPACITOR.
ALL CAPACITANCE VALUES ARE IN μF(P=pF).
ALL INDUCTANCE VALUES ARE IN μH(m=mH).
ALL E.CAPACITORS ARE SHOWN IN THE FORM OF CAPACITANCE (μF)/RATED VOLTAGE (V).
POLYPROPYLENE CAPACITOR

⚠ Parts are safety assurance parts. When replacing those parts make sure to use the specified one.

SHEET 6

■ DVD servo and system control section (1/2)

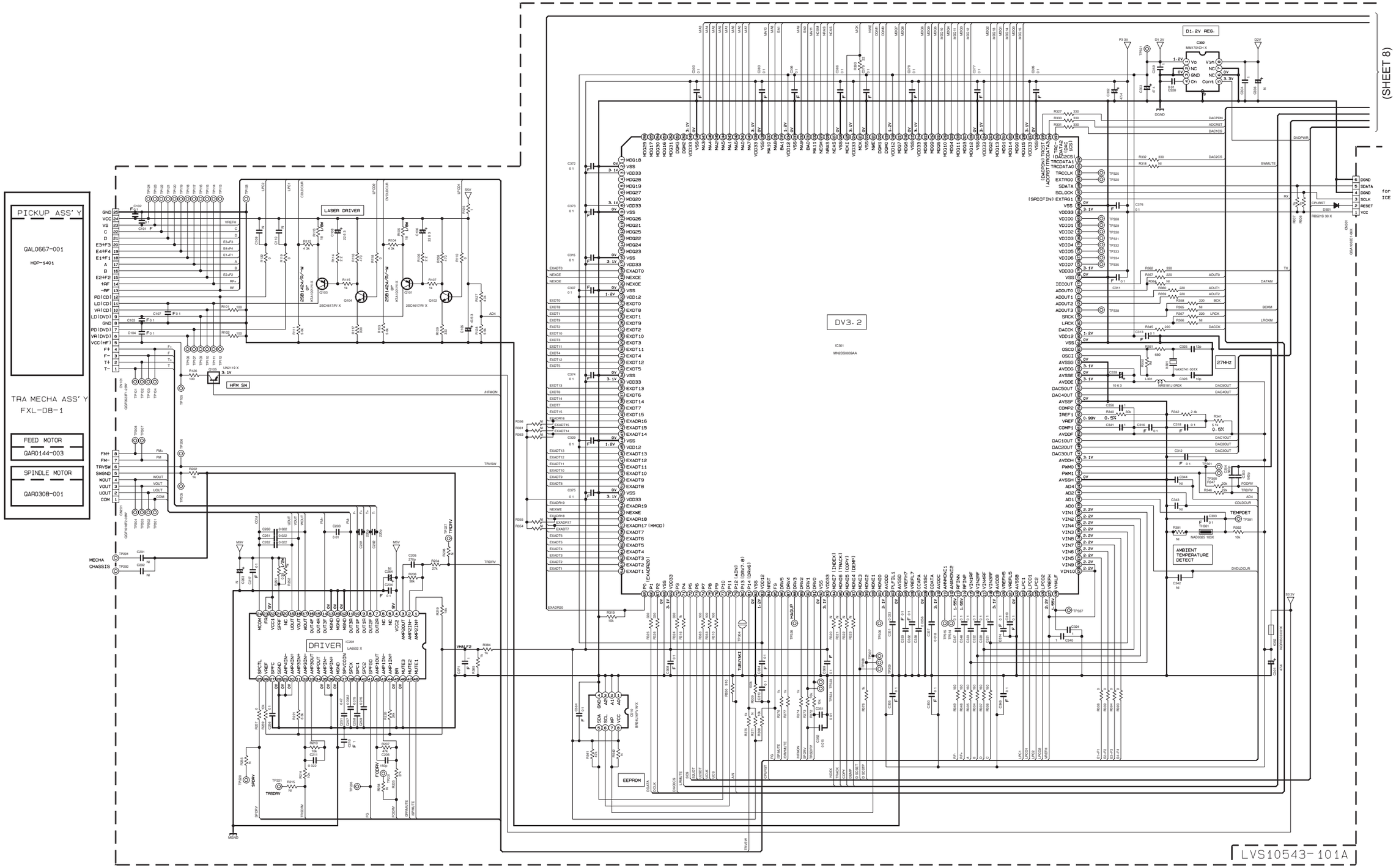

SHEET 7

■ DVD servo and system control section (2/2)

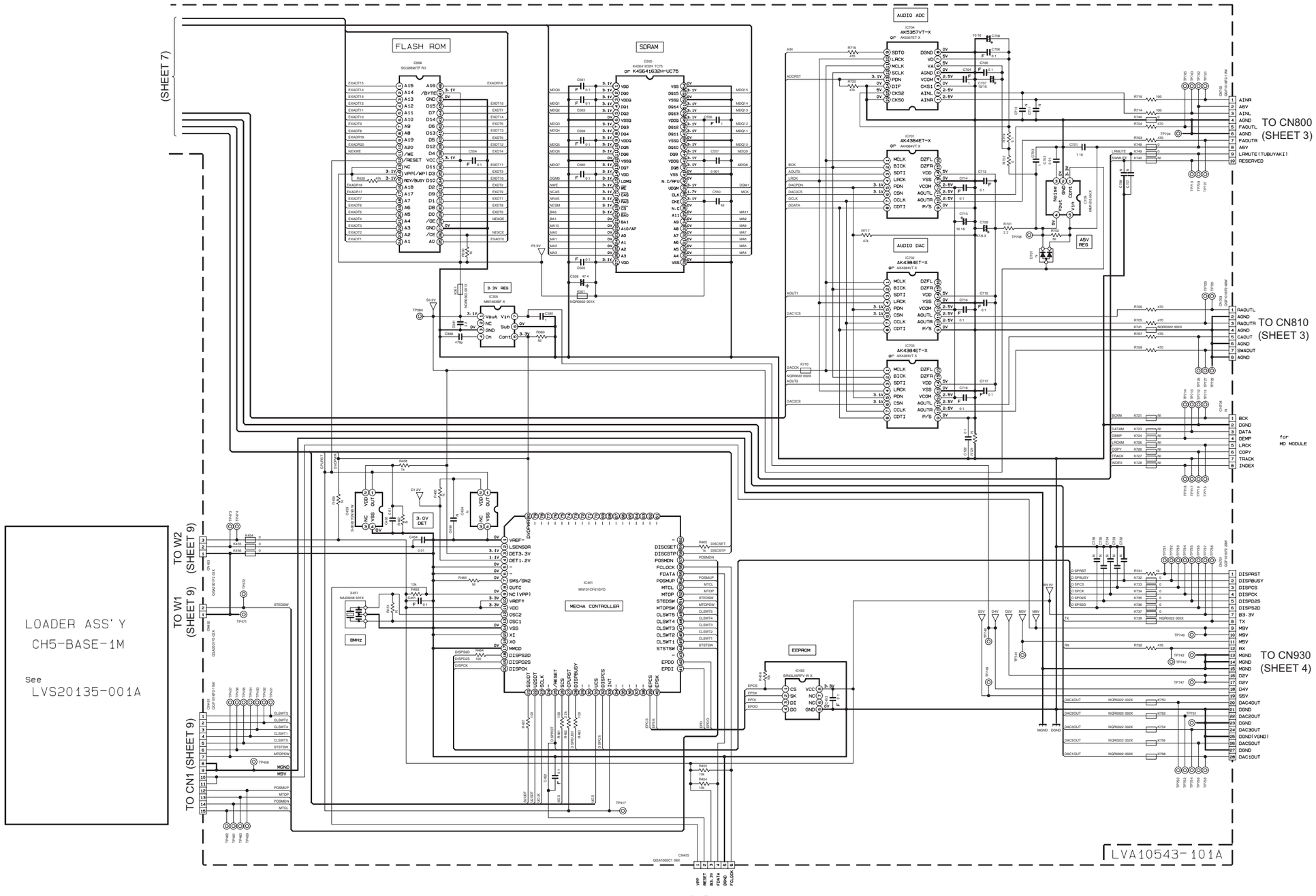

NOTES

1. VOLTAGES ARE DC-MEASURED WITH A DIGITAL VOLT METER WITHOUT INPUT SIGNAL.
   CONDITION ---- A DVD disc in the Tray 1. and STOP mode.

2. UNLESS OTHERWISE SPECIFIED.
   ALL RESISTORS ARE 1/16W ±5% METAL GLAZE RESISTOR. OR 0.5% METAL GLAZE RESISTOR.
   ALL CAPACITORS ARE 50V, 25V, 16V, 10V or 6.3V CERAMIC CAPACITOR.
   ALL RESISTANCE VALUES ARE IN OHM(Ω).
   ALL CAPACITANCE VALUES ARE IN μF(p=pF).
   ALL E-CAPACITORS ARE SHOWN IN THE FORM OF CAPACITANCE(μF)/RATED VOLTAGE (V).
   ALL INDUCTANCE VALUES ARE IN μH(m=mH).

3. NI STANDS FOR NOT INSERTED PARTS.

4. DIGITAL TRANSISTOR

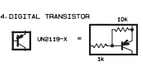

SHEET 8

■ DVD tray control section

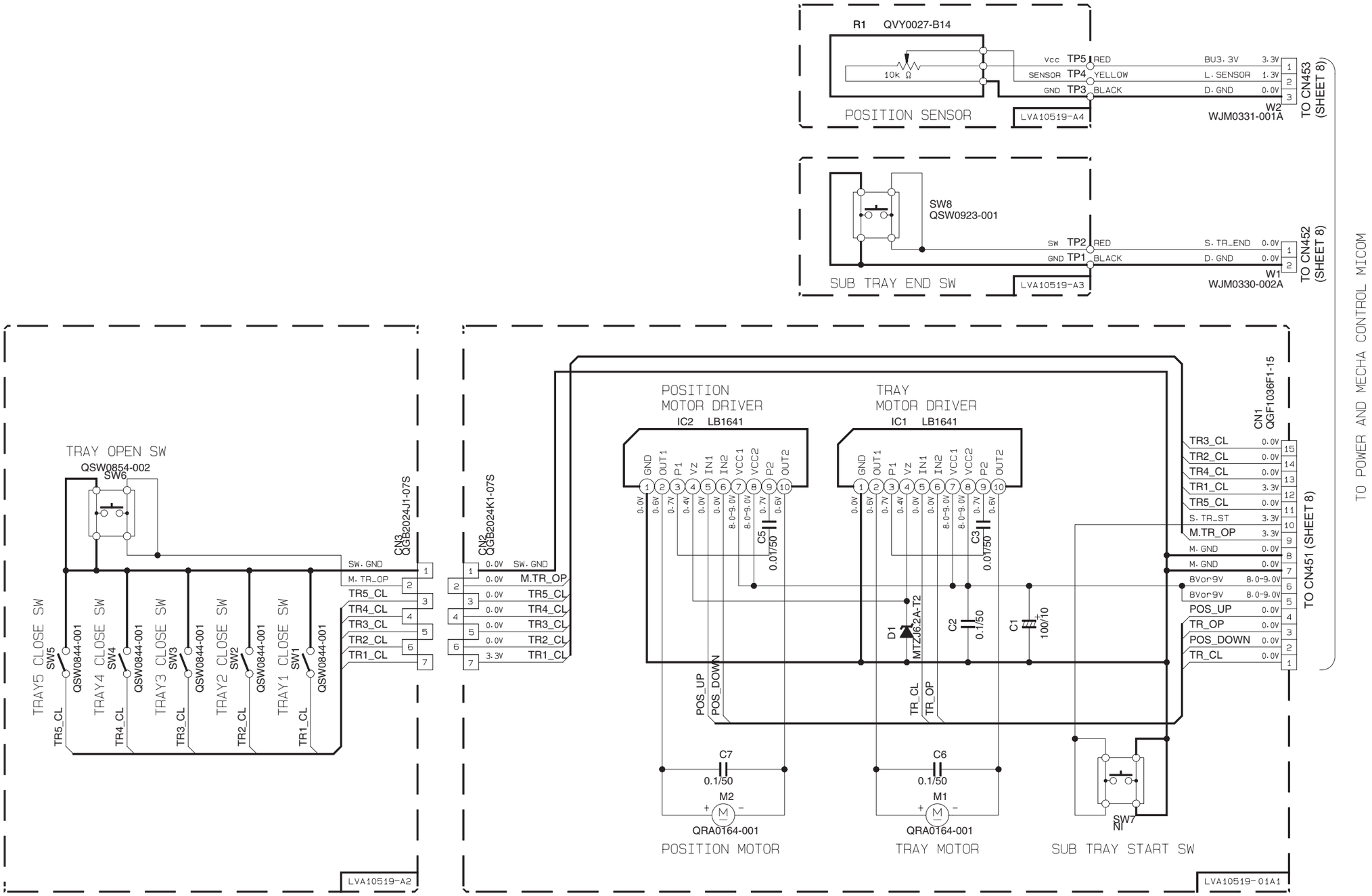

NOTES

1. VOLTAGES ARE DC-MEASURED WITH A DIGITAL VOLT METER.
   CONDITION:DISC1 STOP
2. UNLESS OTHERWISE SPECIFIED.
   ALL CAPACITORS ARE SHOWN IN THE FORM OF CAPACITANCE(μF)/RATED VOLTAGE(V).
3. NI STANDS FOR NOT INSERTED PARTS.

SHEET 9

Printed circuit boards (For DX-T9)

■ Amplifier board

Lead free solder used in the board (material : Sn-Ag-Cu, melting point : 219 Centigrade)

(Surround terminal board)

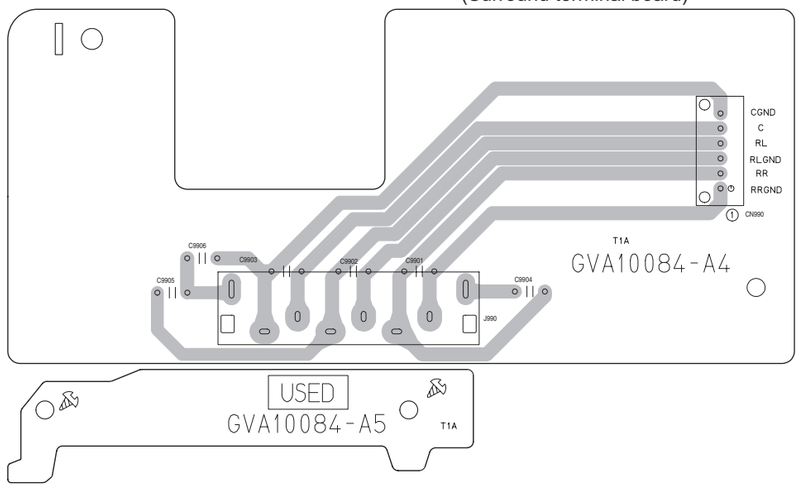

(Amplifier 2 board)

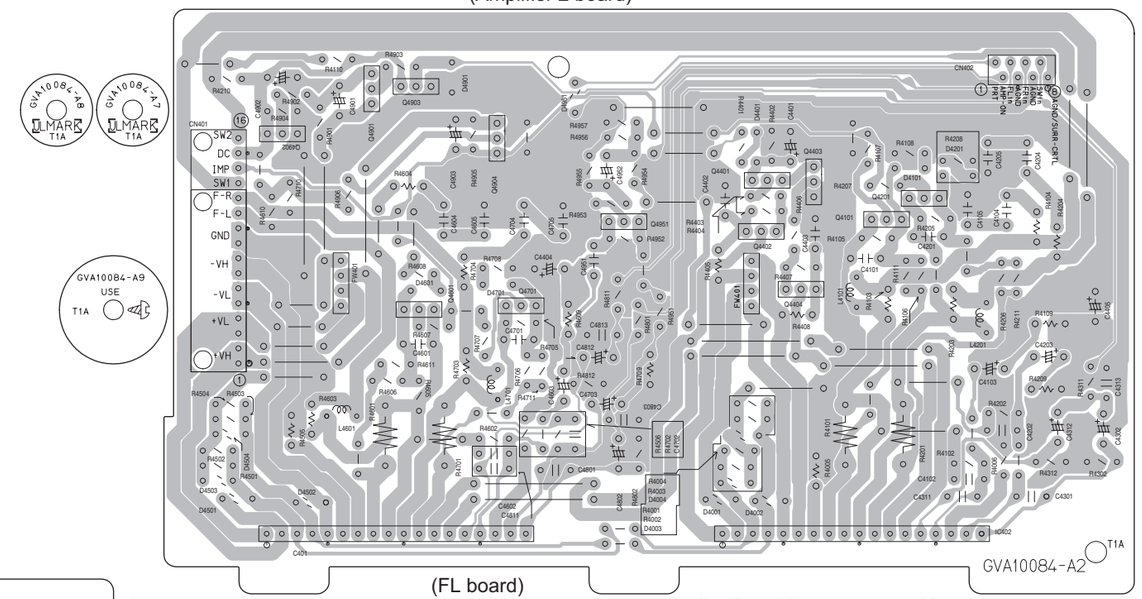

(Amplifier 1 board)

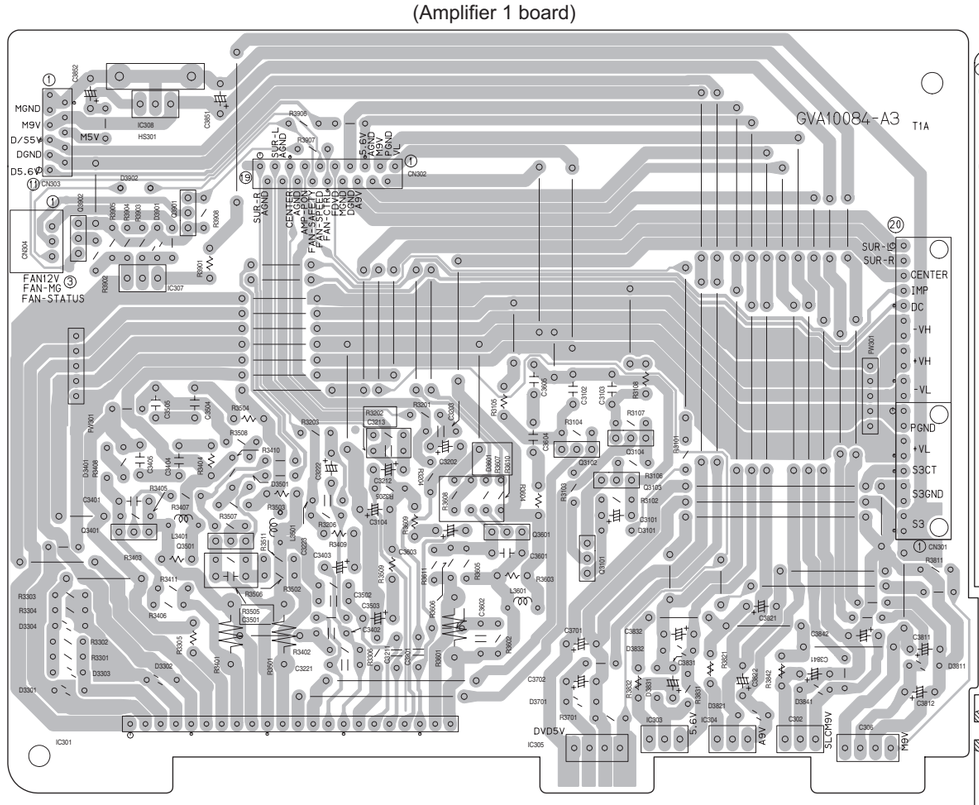

(FL board)

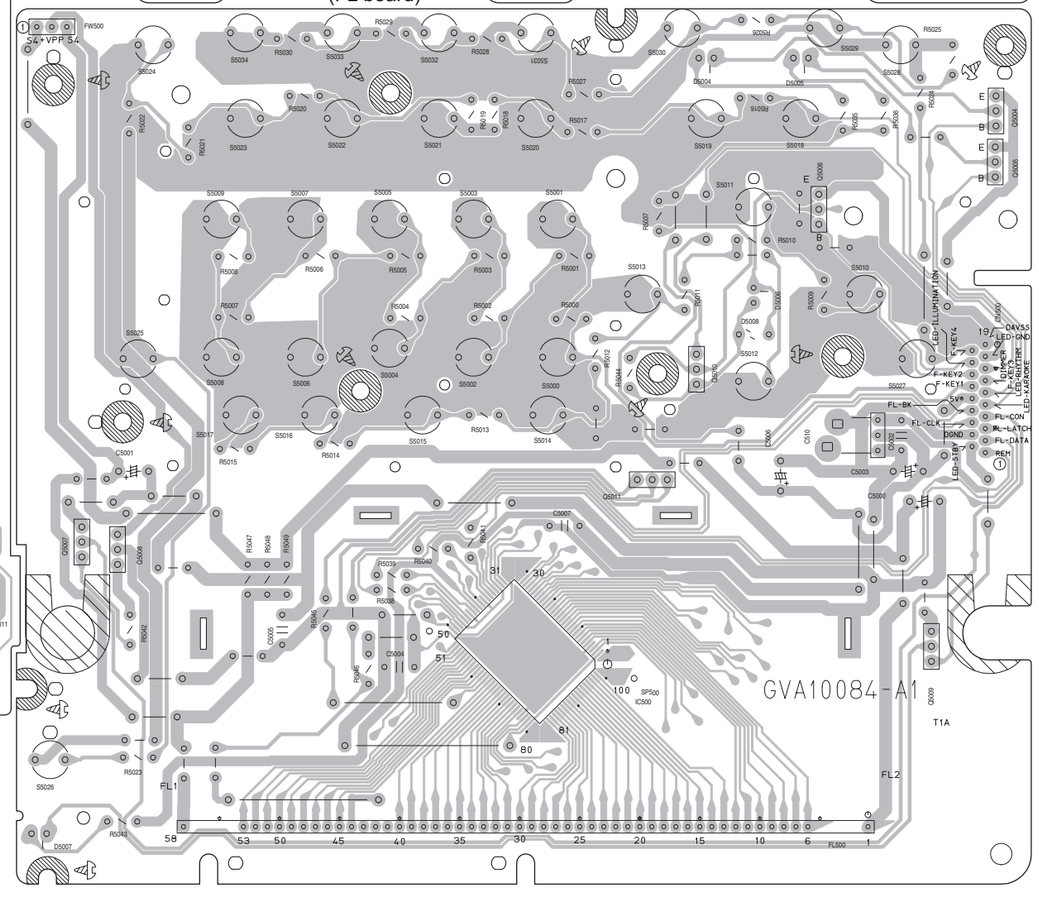

■ Main board

Lead free solder used in the board (material : Sn-Ag-Cu, melting point : 219 Centigrade)

(Microphone amplifier board)

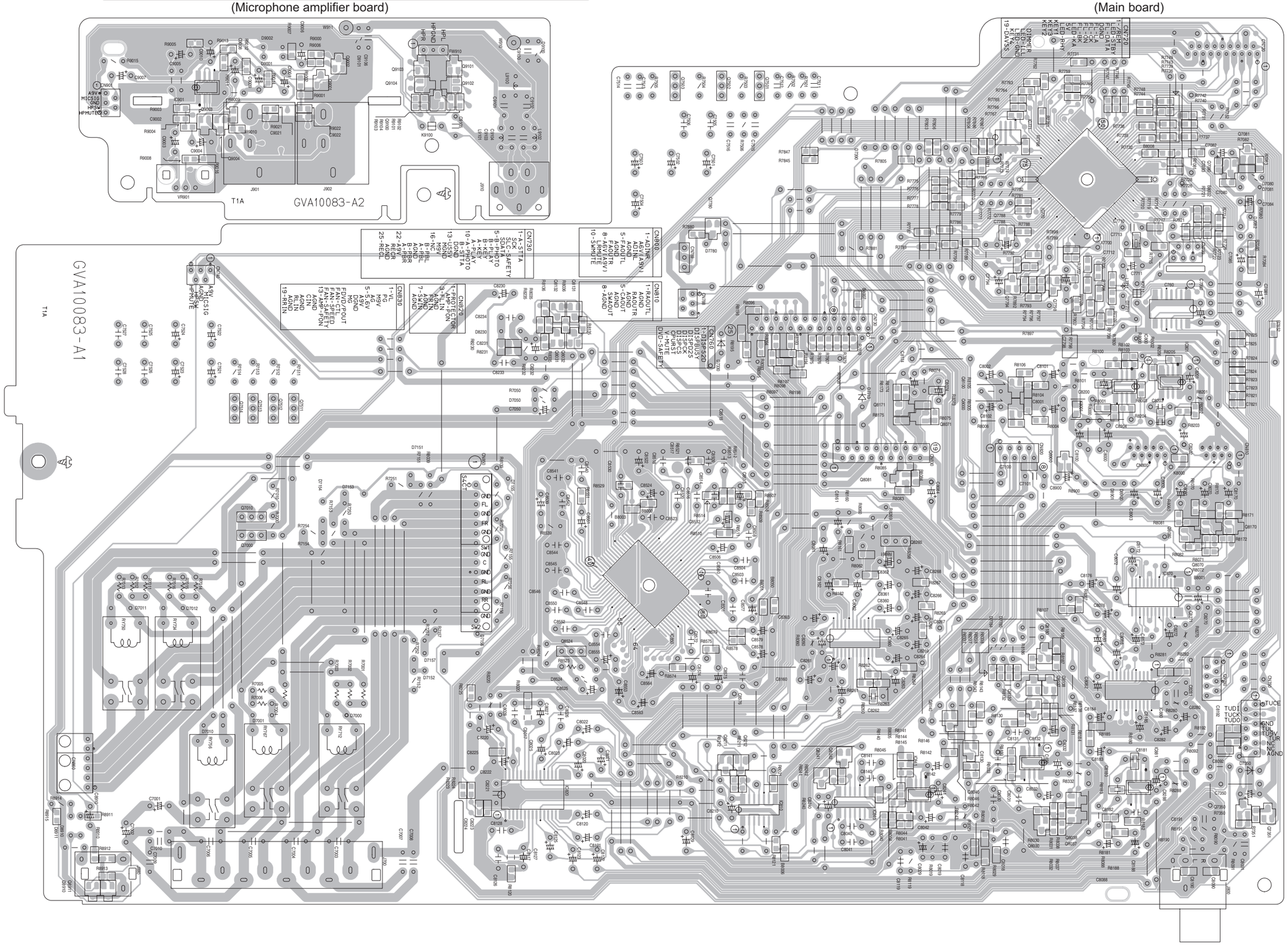

■ Primary board

Lead free solder used in the board (material : Sn-Ag-Cu, melting point : 219 Centigrade)

(Primary board)

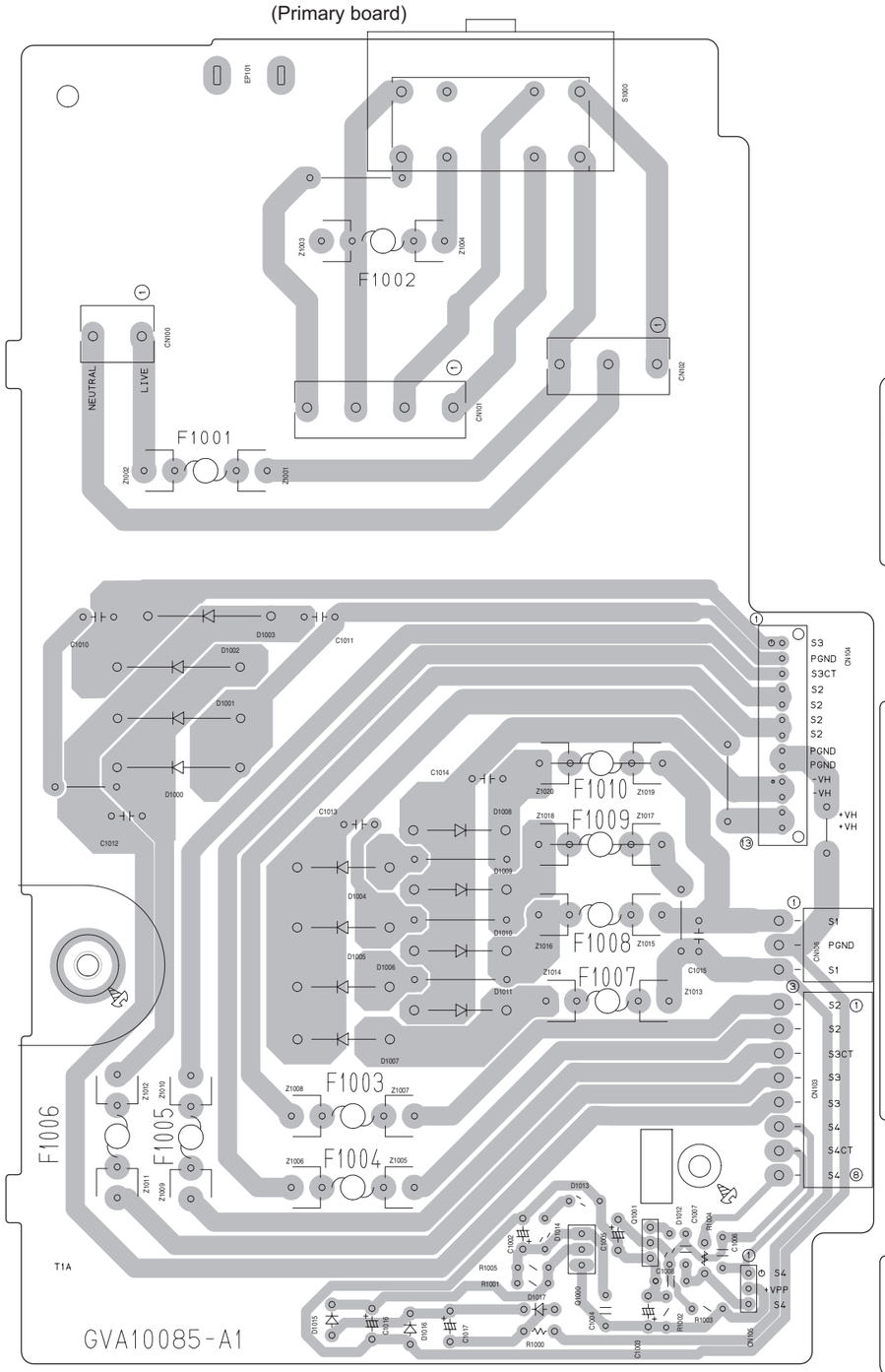

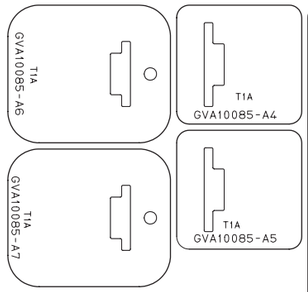

(Video board)

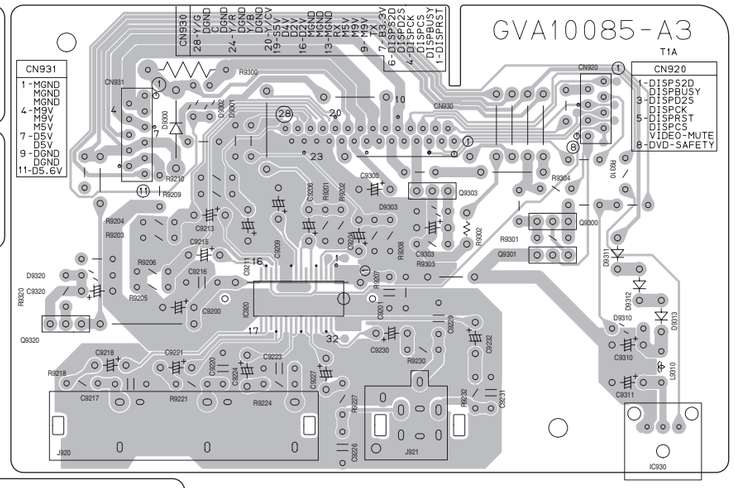

(Bridge board)

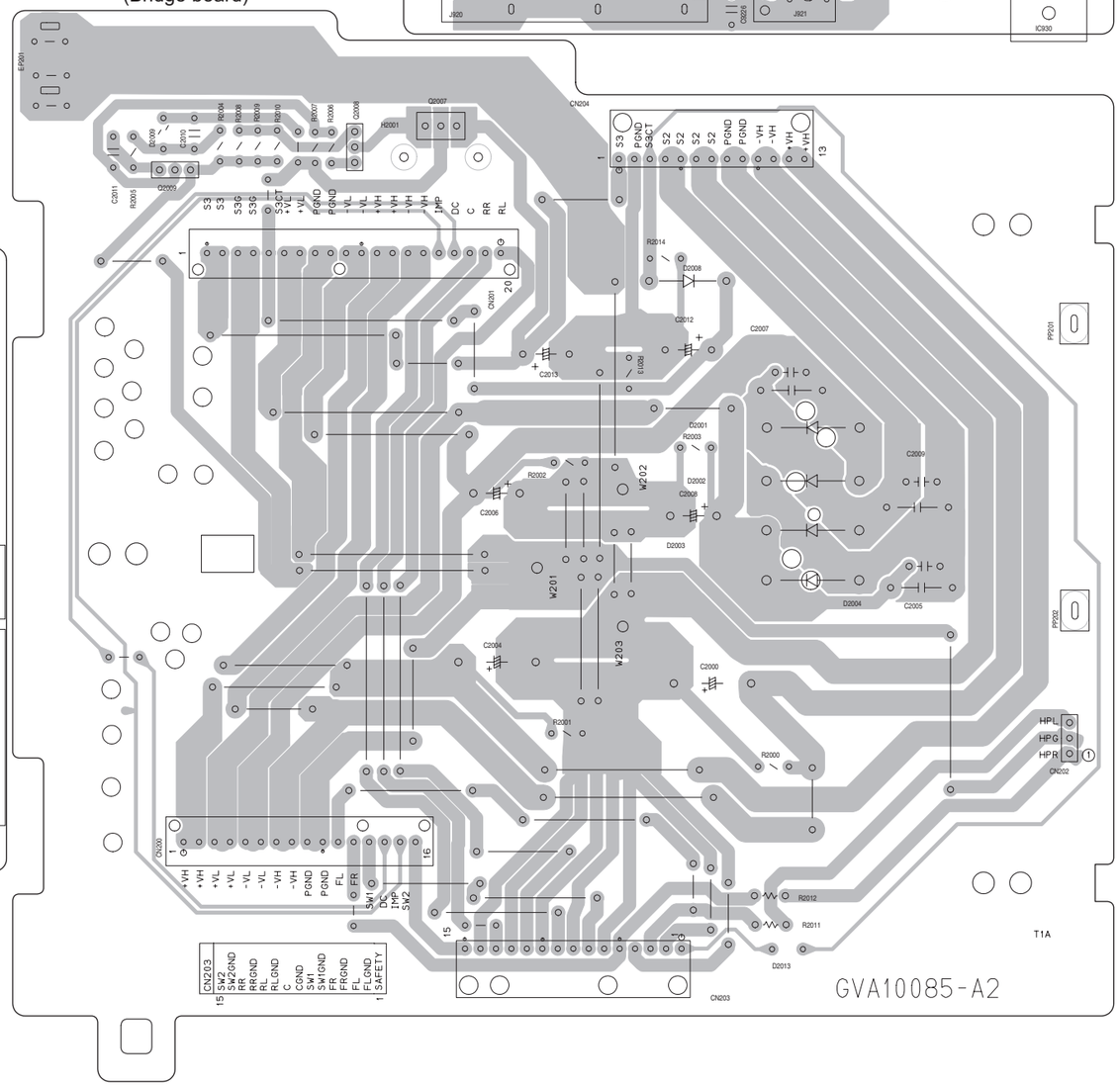

■ DVD servo board

Lead free solder used in the board (material : Sn-Ag-Cu, melting point : 219 Centigrade)

Forward side

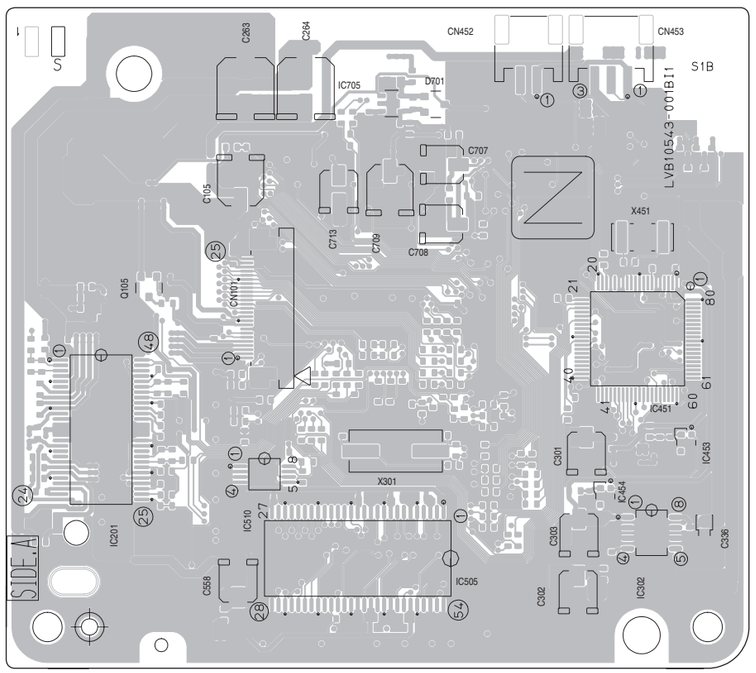

Reverse side

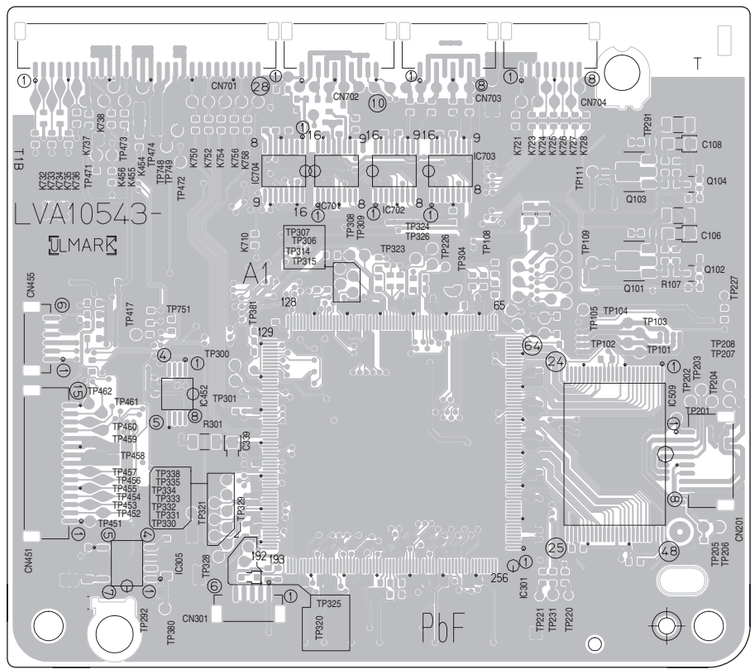

■ Loading board

Lead free solder used in the board (material : Sn-Ag-Cu, melting point : 219 Centigrade)

(Motor board)

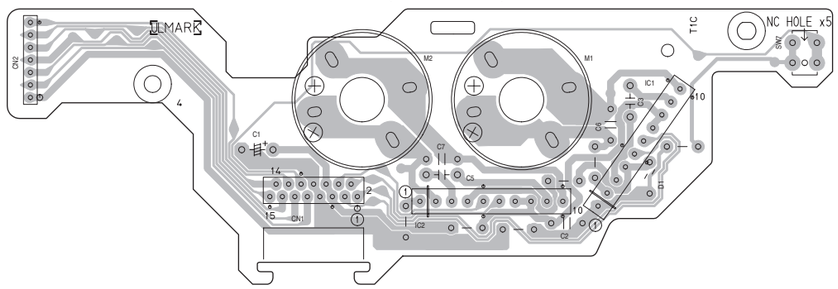

(Tray switch board)

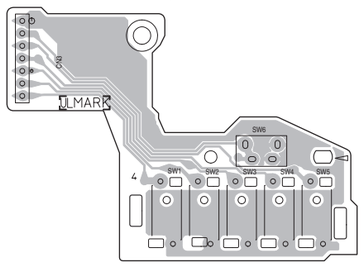

(Switch board)

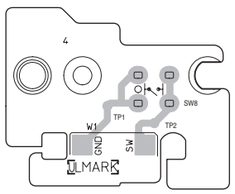

(Sensor board)

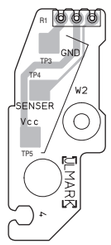

■ Cassette switch board (For A cassette)

Lead free solder used in the board (material : Sn-Ag-Cu, melting point : 219 Centigrade)

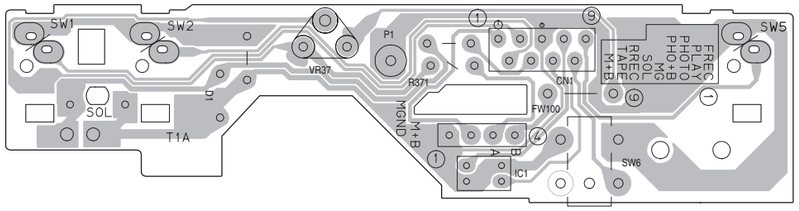

■ Cassette switch board (For B cassette)

Lead free solder used in the board (material : Sn-Ag-Cu, melting point : 219 Centigrade)

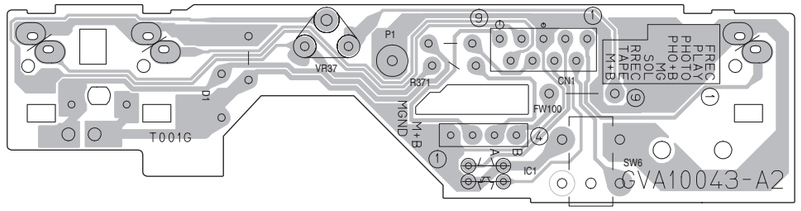

■ Head amplifier board (For A cassette)

Lead free solder used in the board (material : Sn-Ag-Cu, melting point : 219 Centigrade)

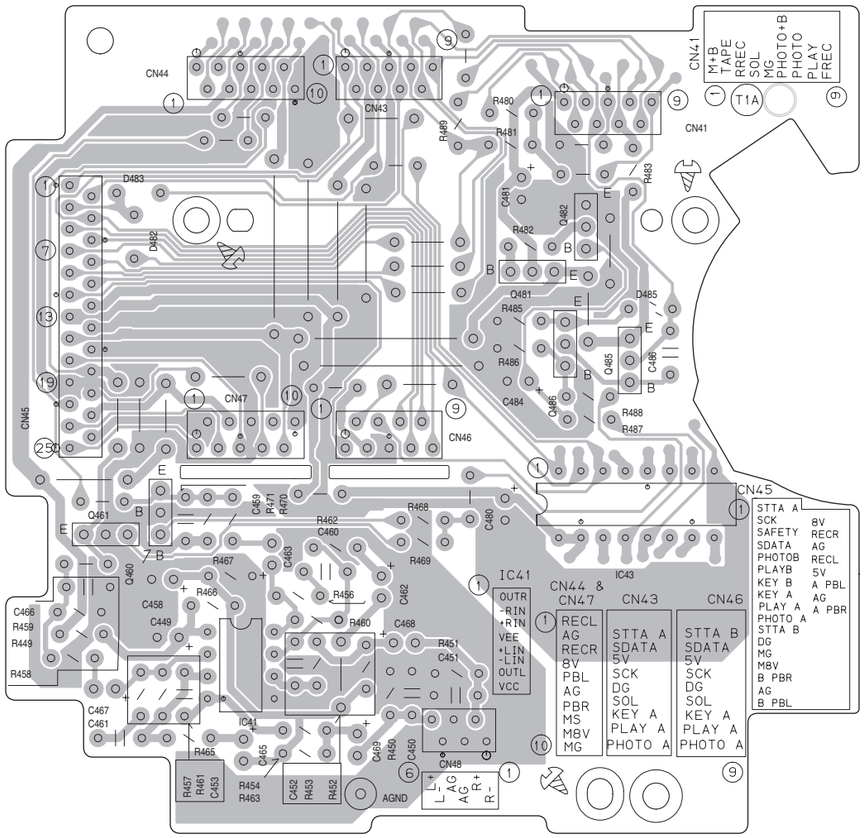

■ Head amplifier board (For B cassette)

Lead free solder used in the board (material : Sn-Ag-Cu, melting point : 219 Centigrade)

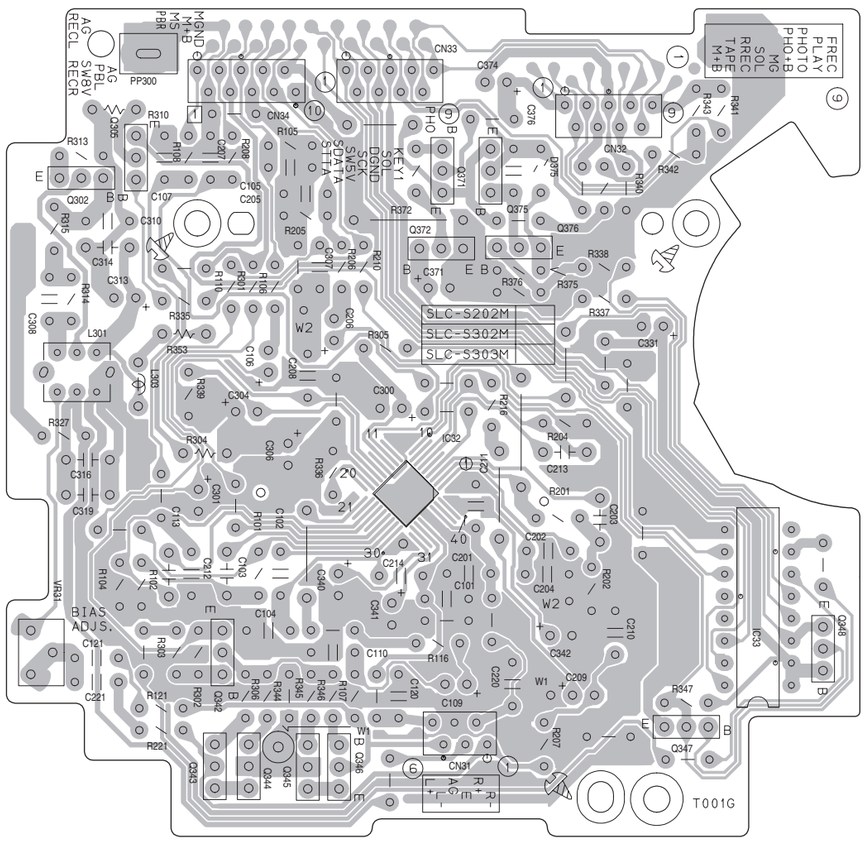

Block diagram (For DX-T7)

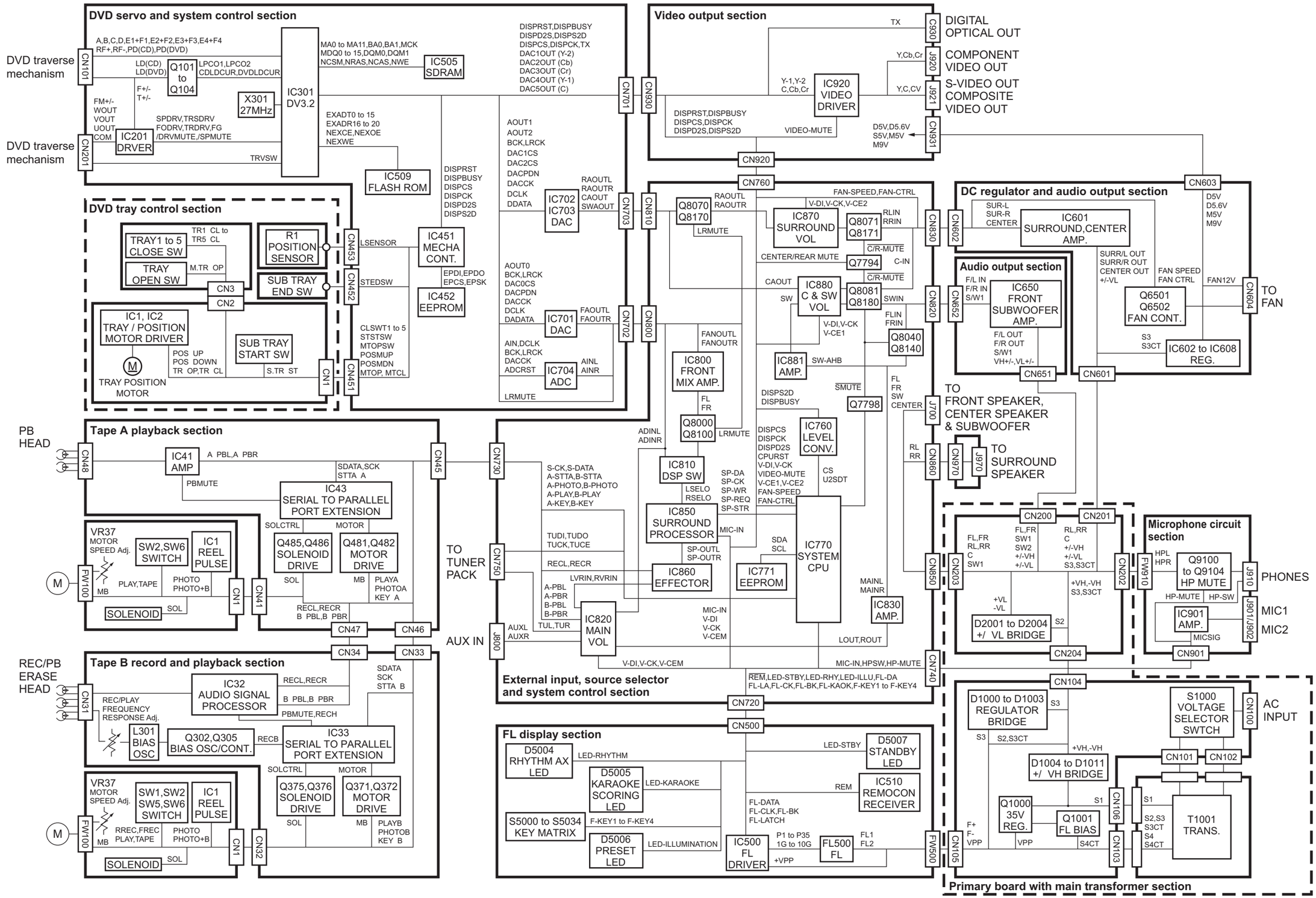

Standard schematic diagrams (For DX-T7)

■ Primary board with main transformer section

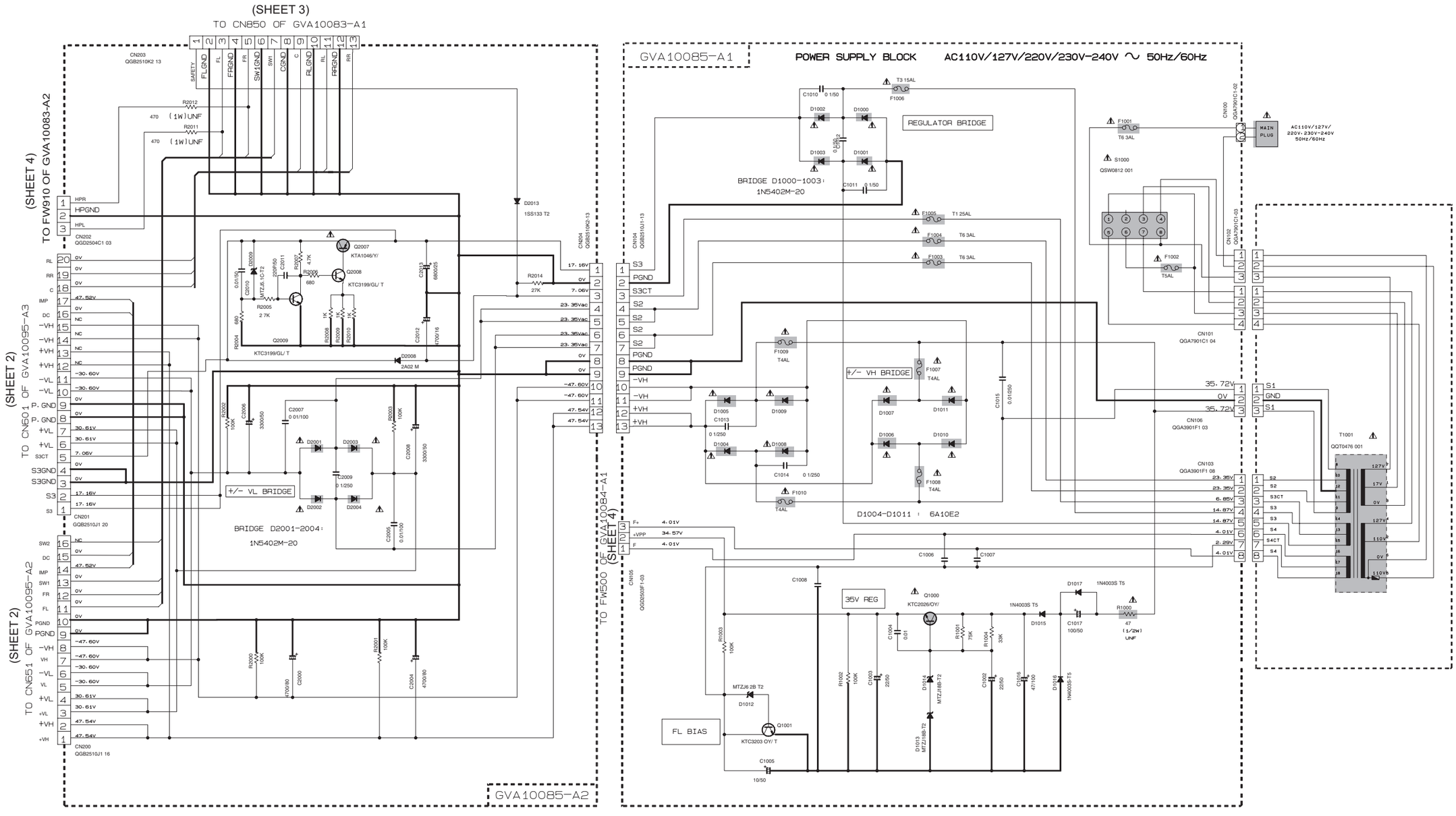

NOTES

1. VOLTAGES ARE DC-MEASURED WITH A DIGITAL VOLT METER OR OSCILLOSCOPE WITHOUT INPUT SIGNAL.
   CONDITION —— AUX MODE, VOL MIN, BASS OFF
2. UNLESS OTHERWISE SPECIFIED
   RESISTORS ARE 1/4W ± 5% CARBON RESISTOR.
   ALL RESISTANCE VALUES ARE IN OHM(Ω).
   ALL CAPACITORS ARE CERAMIC CAPACITOR OR MYLAR CAPACITOR.
   ALL CAPACITANCE VALUES ARE IN μF(P=pF).
   ALL INDUCTANCE VALUES ARE IN μH(m=mH).
   ALL E.CAPACITORS ARE SHOWN IN THE FORM OF CAPACITANCE (μF)/RATED VOLTAGE (V).
   ALL DIODES ARE 1SS119-041-T2

VOLTAGE SELECTOR LOCATION

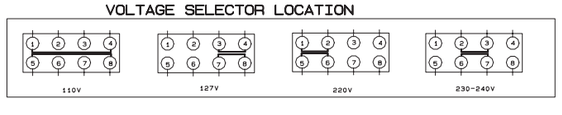

EXPLANATION OF OVERALL SCHEMATIC

MODEL DX-T7

SHEET NUMBER	
1	PRIMARY BOARD WITH MAIN TRANSFORMER
2	DC REGULATOR/AUDIO OUTPUT
3	EXTERNAL INPUT, SOURCE SELECTOR SYSTEM CONTROL
4	VIDEO OUTPUT, MIC CIRCUIT FL DISPLAY, USER CONTROL KEYS
5	TAPEA-SLC-S401M, PLAYBACK ONLY.
6	TAPEB-SLCS302M, RECORD PLAYBACK.
7	DVD SERVO AND SYSTEM CONTROL(1/2)
8	DVD SERVO AND SYSTEM CONTROL(2/2)

MODEL VERSIONS	COUNTRY CODES	
DX-T5: UW, UY, US, UN, UX, UG	UW	- SOUTH AMERICA
	UY	- ARGENTINA
DX-T7: US, UN, UX, UG, UW, A	US	- SINGAPORE
	UN	- INDONESIA
	UX	- SAUDI ARABIA
DX-T9: UW, US, UN, UX, A, UG	A	- AUSTRALIA
	UG	- EGYPT, SOUTH AFRICA, TURKEY

⚠ Parts are safety assurance parts. When replacing those parts make sure to use the specified one.

SHEET 1

■ DC regulator and audio output section

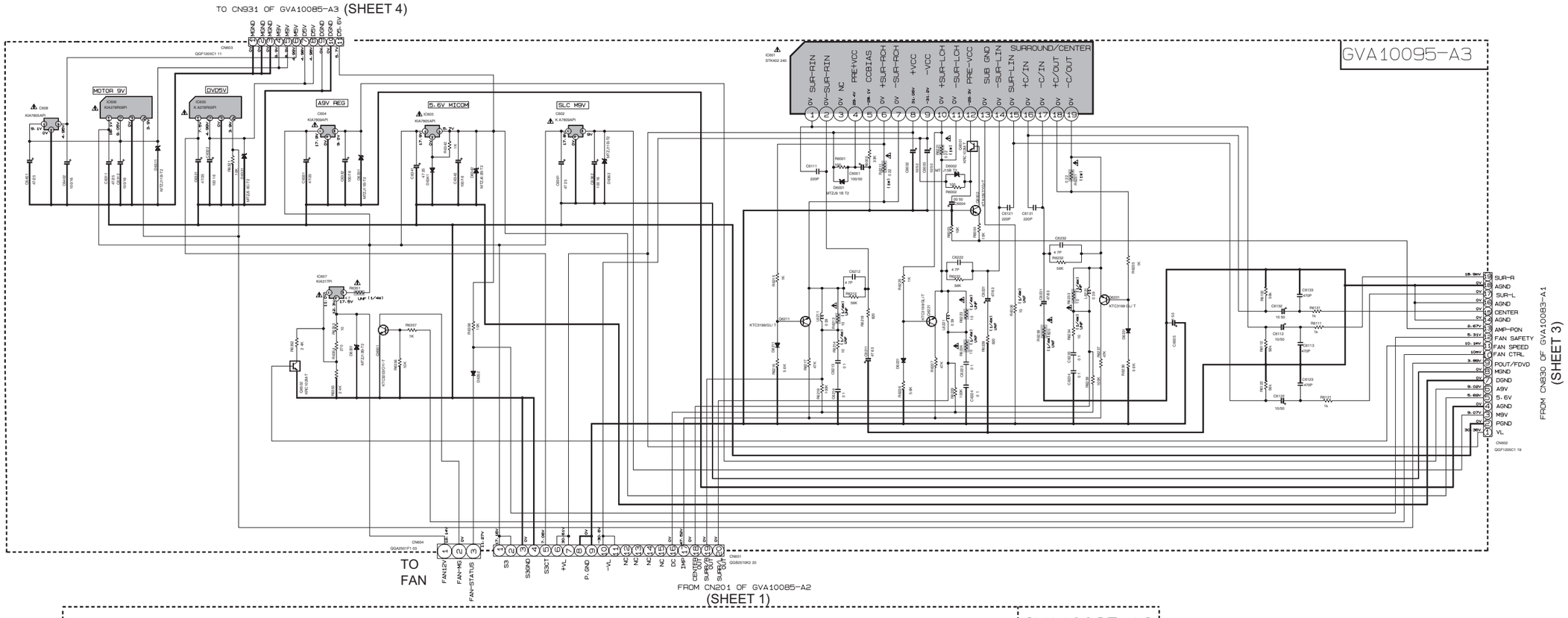

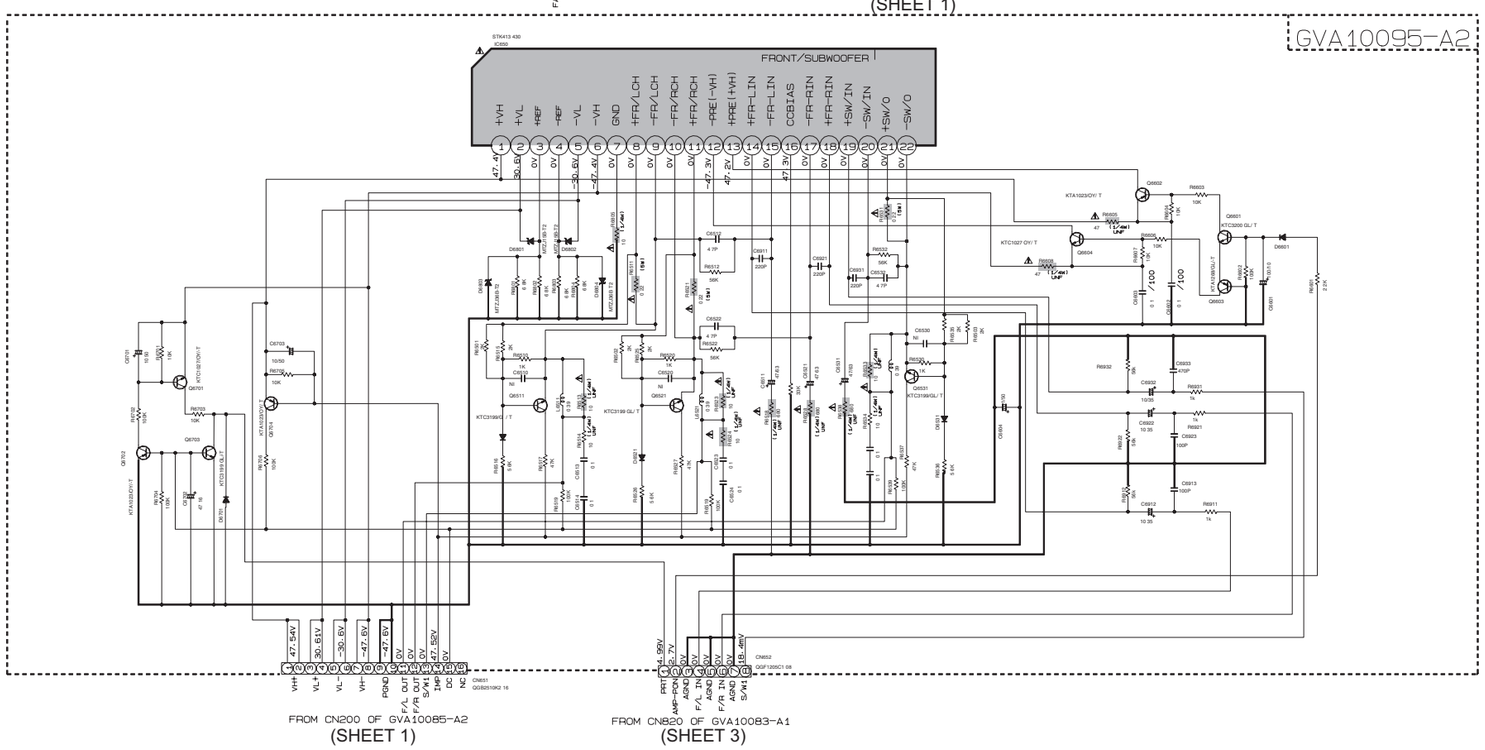

NOTES

1. VOLTAGES ARE DC-MEASURED WITH A DIGITAL VOLT METER OR OSCILLOSCOPE WITHOUT INPUT SIGNAL.
   CONDITION ---- AUX MODE, VOL MIN, BASS OFF
2. UNLESS OTHERWISE SPECIFIED
   RESISTORS ARE 1/4W ± 5% CARBON RESISTOR.
   ALL RESISTANCE VALUES ARE IN OHM(Ω).
   ALL CAPACITORS ARE CERAMIC CAPACITOR OR MYLAR CAPACITOR.
   ALL CAPACITANCE VALUES ARE IN μF(F=μF).
   ALL INDUCTANCE VALUES ARE IN μH(H=mH).
   ALL E.CAPACITORS ARE SHOWN IN THE FORM OF CAPACITANCE (μF)/RATED VOLTAGE (V).
   ALL DIODES ARE 1SS119-041-T2

⚠ Parts are safety assurance parts. When replacing those parts make sure to use the specified one.

SHEET 2

■ External input, source selector and system control section

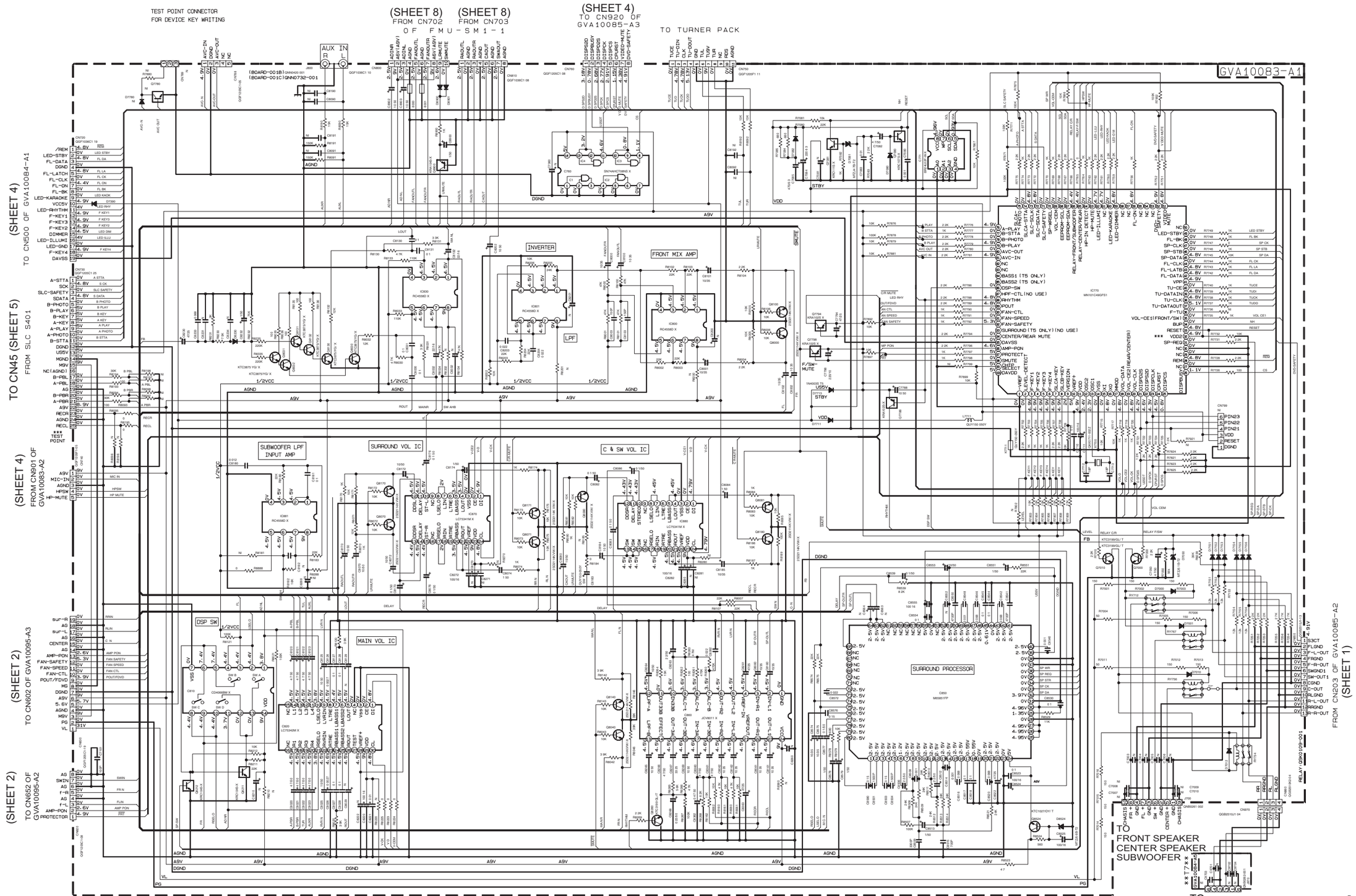

VERSIONS	R7709	R7809
UY	10K	3.3K
UX-UG	10K	15K
UW	10K	27K
US-UN-A	10K	-

NOTES

1. VOLTAGES ARE DC-MEASURED WITH A DIGITAL VOLT METER OR OSCILLOSCOPE WITHOUT INPUT SIGNAL. CONDITION —— CD STOP MODE
2. UNLESS OTHERWISE SPECIFIED.
   ALL RESISTORS ARE 1/4W ± 5% CARBON FILM RESISTOR OR 0.063W ±5% THICK FILM CHIP RESISTOR
   ALL CAPACITORS ARE CERAMIC CAPACITOR OR MYLAR CAPACITOR.
   ALL RESISTANCE VALUES ARE IN OHM(Ω).
   ALL CAPACITANCE VALUES ARE IN F(P=pF).
   ALL E-CAPACITORS ARE SHOWN IN THE FORM OF CAPACITANCE(μF)/RATED VOLTAGE (V).
   ALL INDUCTANCE VALUES ARE IN μH(m=mH).
   ALL DIODES ARE 1SS119-041-T2
   ALL FERRITE BEADS ARE NQR0007-002X

SHEET 3

■ Video output, microphone circuit, FL display and user control keys section

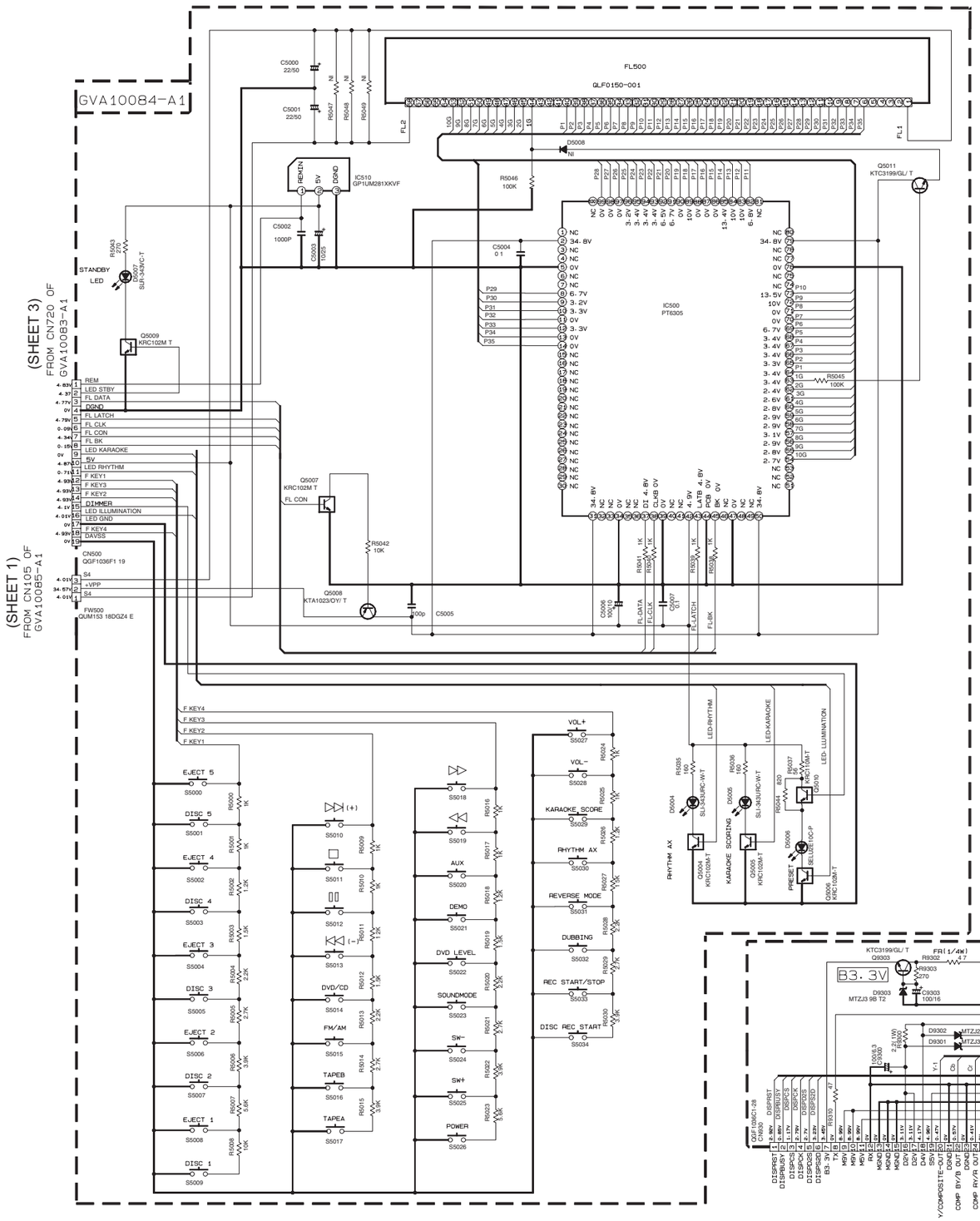

NOTES

1. VOLTAGES ARE DC-MEASURED WITH A DIGITAL VOLT METER OR OSCILLOSCOPE WITHOUT INPUT SIGNAL.
   CONDITION ---- AUX MODE. VOL MIN. BASS OFF
2. UNLESS OTHERWISE SPECIFIED
   RESISTORS ARE 1/4W±5% CARBON RESISTOR.
   ALL RESISTANCE VALUES ARE IN OHM(Ω).
   ALL CAPACITORS ARE CERAMIC CAPACITOR MYLAR CAPACITOR.
   ALL CAPACITANCE VALUES ARE IN μF(P=pF).
   ALL INDUCTANCE VALUES ARE IN μH(m=mH).
   ALL E-CAPACITORS ARE SHOWN IN THE FORM OF CAPACITANCE (μF)/RATED VOLTAGE (V).
   ALL DIODE ARE 1SS133-T2
   ALL TACT SWITCH ARE QSW0674-001Z

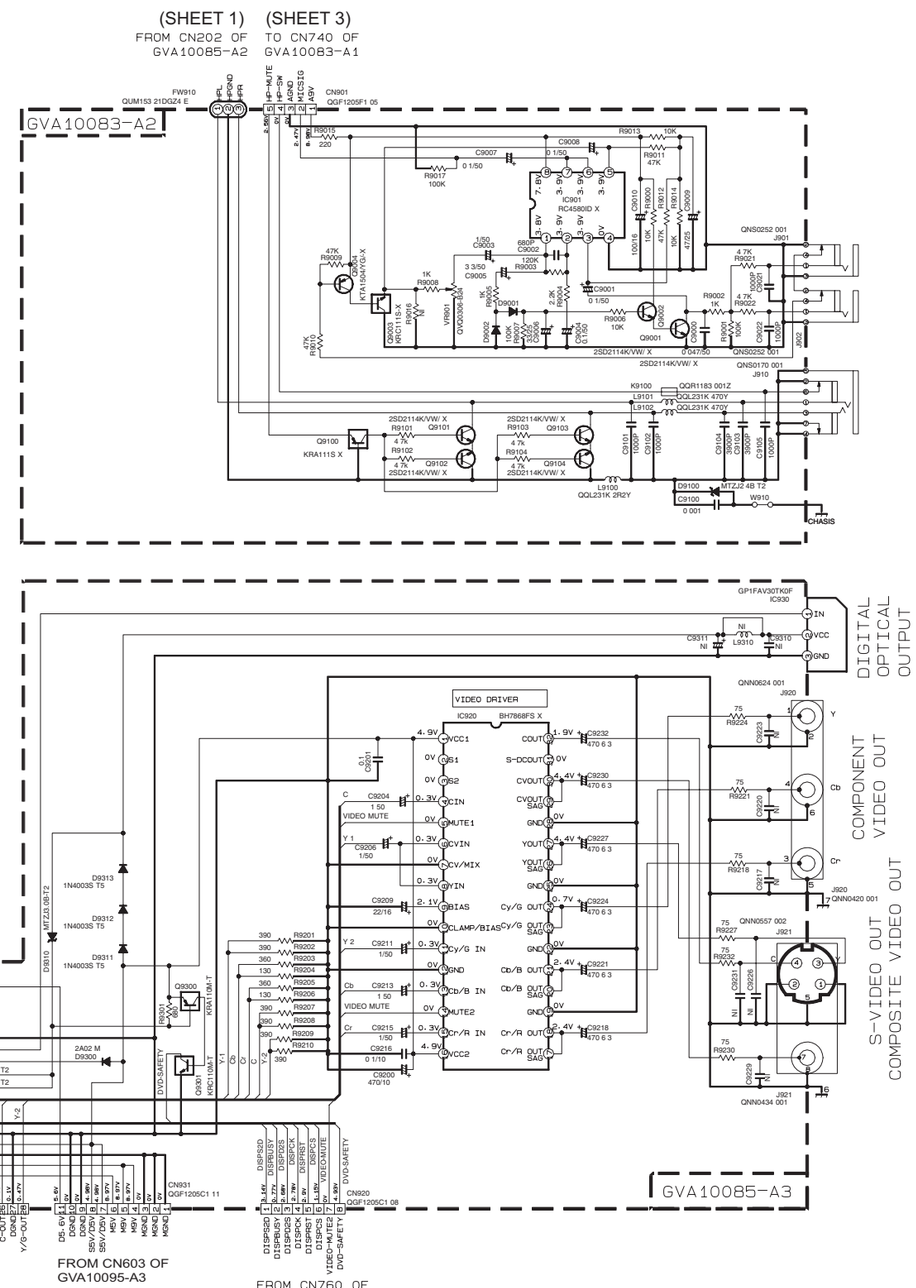

SHEET 4

■ Tape A playback section

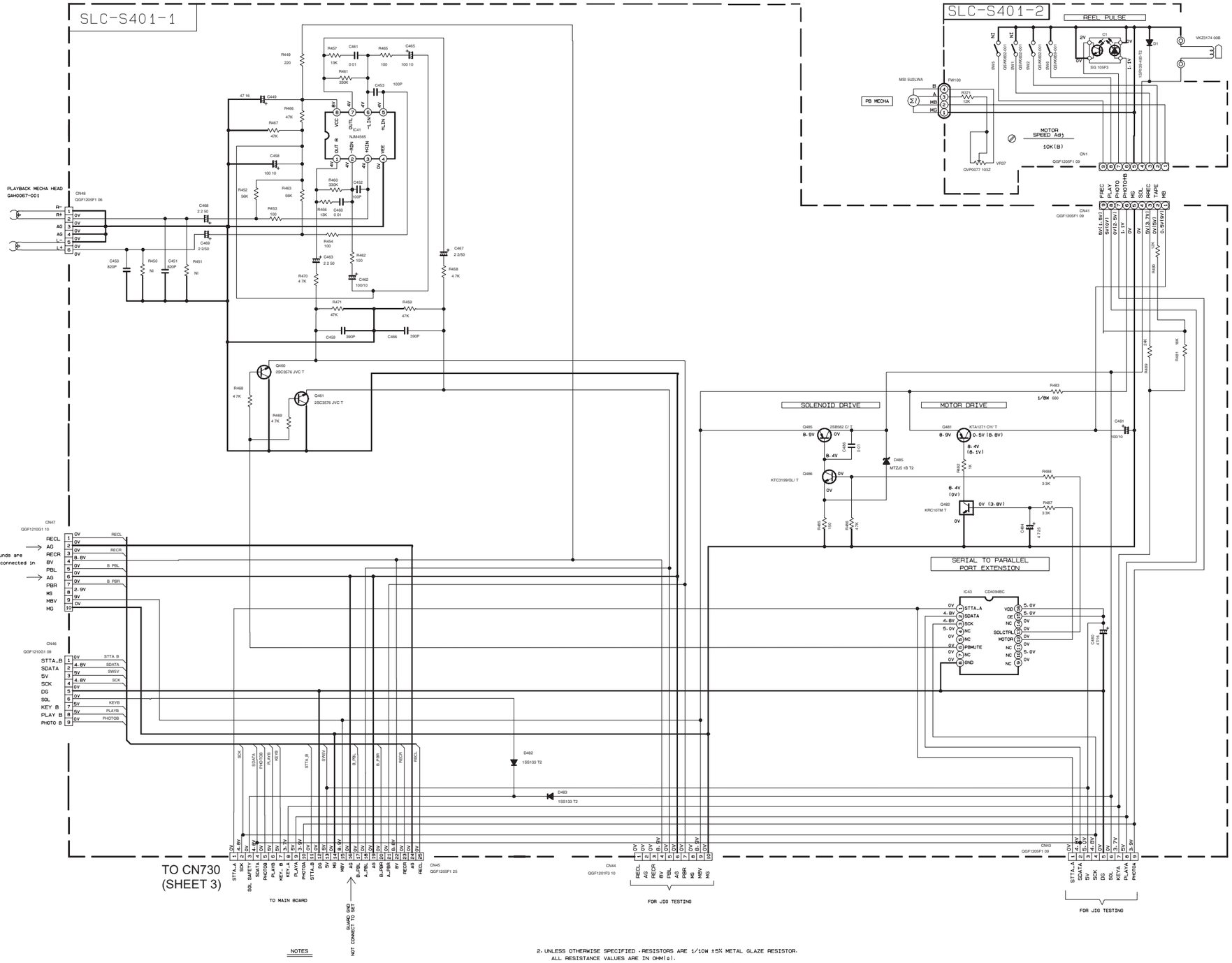

NOTES

1. VOLTAGES ARE DC-MEASURED WITH A DIGITAL VOLT METER OR OSCILLOSCOPE WITHOUT INPUT SIGNAL.
CONDITION : MECHA STOP MODE

2. UNLESS OTHERWISE SPECIFIED : RESISTORS ARE 1/10W ±5% METAL GLAZE RESISTOR.
ALL RESISTANCE VALUES ARE IN OHM(s).
ALL CAPACITORS ARE CERAMIC CAPACITOR OR MYLAR CAPACITOR.
ALL CAPACITANCE VALUES ARE IN μF(P=pF).
ALL INDUCTANCE VALUES ARE IN μH(m=mH).
ALL E.CAPACITORS ARE SHOWN IN THE FORM OF CAPACITANCE (μF)/RATED VOLTAGE (V).
POLYPROPYLENE CAPACITOR

SHEET 5

■ Tape B record and playback section

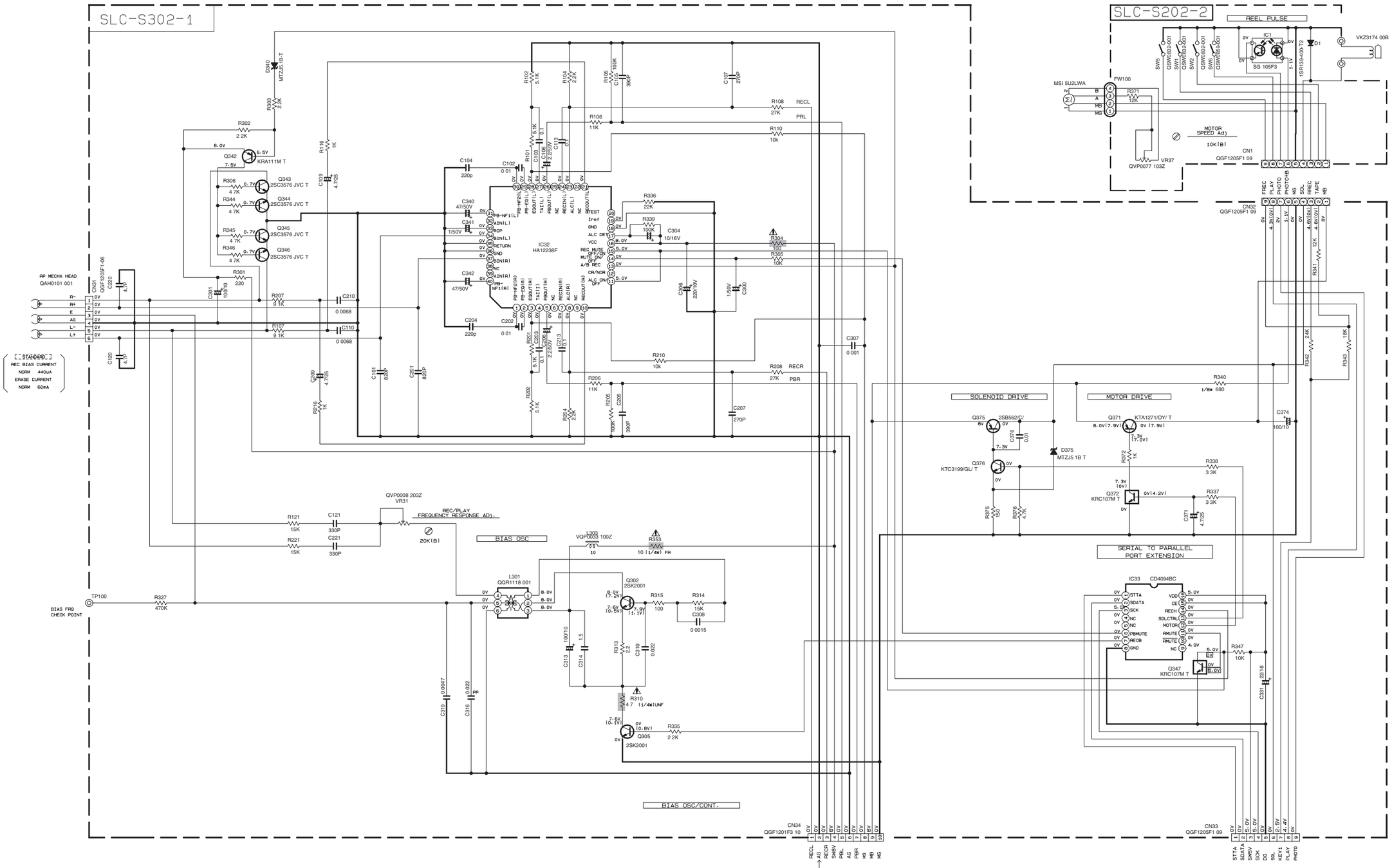

NOTES

1. VOLTAGES ARE DC-MEASURED WITH A DIGITAL VOLT METER OR OSCILLOSCOPE WITHOUT INPUT SIGNAL.
   CONDITION : MECHA STOP MODE

2. UNLESS OTHERWISE SPECIFIED , RESISTORS ARE 1/10W ±5% METAL GLAZE RESISTOR.
   ALL RESISTANCE VALUES ARE IN OHM(Ω).
   ALL CAPACITORS ARE CERAMIC CAPACITOR OR MYLAR CAPACITOR.
   ALL CAPACITANCE VALUES ARE IN μF(P=pF).
   ALL INDUCTANCE VALUES ARE IN μH(m=mH).
   ALL E.CAPACITORS ARE SHOWN IN THE FORM OF CAPACITANCE (μF)/RATED VOLTAGE (V).
   ‖ POLYPROPYLENE CAPACITOR

⚠ Parts are safety assurance parts. When replacing those parts make sure to use the specified one.

SHEET 6

■ DVD servo and system control section (1/2)

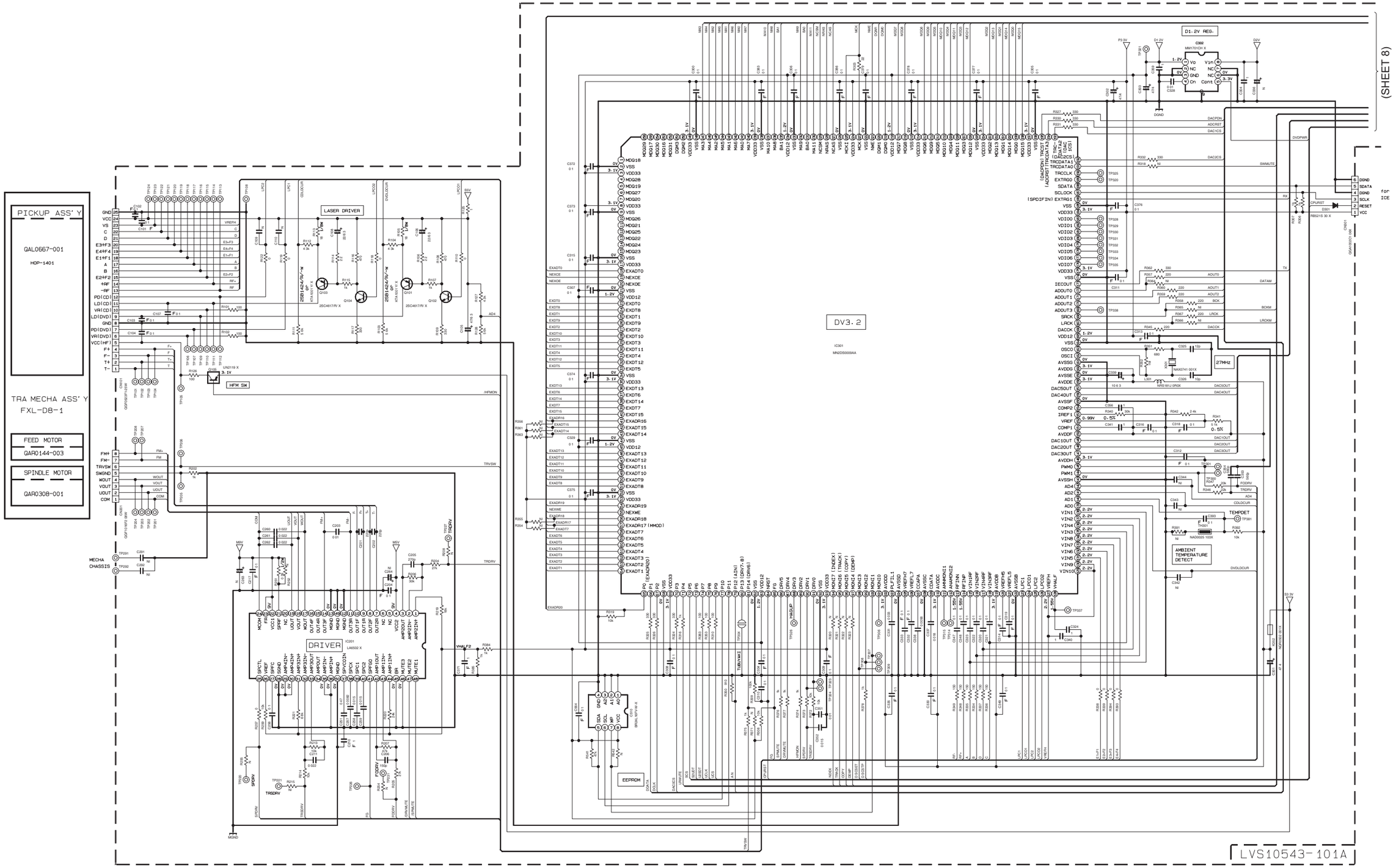

SHEET 7

■ DVD servo and system control section (2/2)

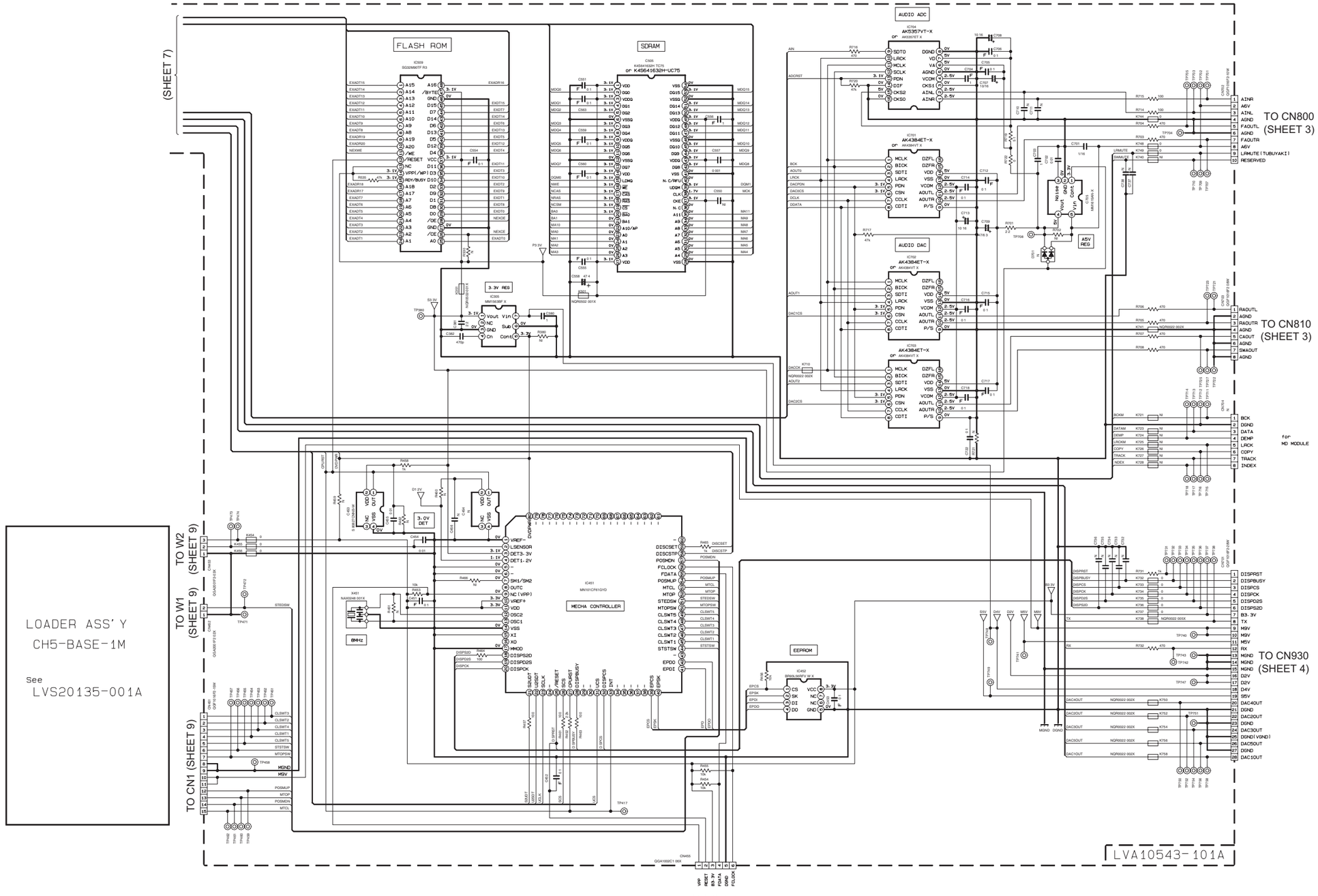

NOTES

1. VOLTAGES ARE DC-MEASURED WITH A DIGITAL VOLT METER WITHOUT INPUT SIGNAL.
   CONDITION ---- A DVD disc in the Tray 1 and STOP mode.

2. UNLESS OTHERWISE SPECIFIED.
   ALL RESISTORS ARE 1/16W ±5% METAL GLAZE RESISTOR. OR 0.5% METAL GLAZE RESISTOR.
   ALL CAPACITORS ARE 50V, 25V, 16V, 10V or 6.3V CERAMIC CAPACITOR.
   ALL RESISTANCE VALUES ARE IN OHM(Ω).
   ALL CAPACITANCE VALUES ARE IN μF(p=pF).
   ALL E.CAPACITORS ARE SHOWN IN THE FORM OF CAPACITANCE(μF)/RATED VOLTAGE (V).
   ALL INDUCTANCE VALUES ARE IN μH(m=mH).

3. NI STANDS FOR NOT INSERTED PARTS.

4. DIGITAL TRANSISTOR

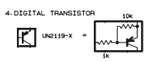

SHEET 8

■ DVD tray control section

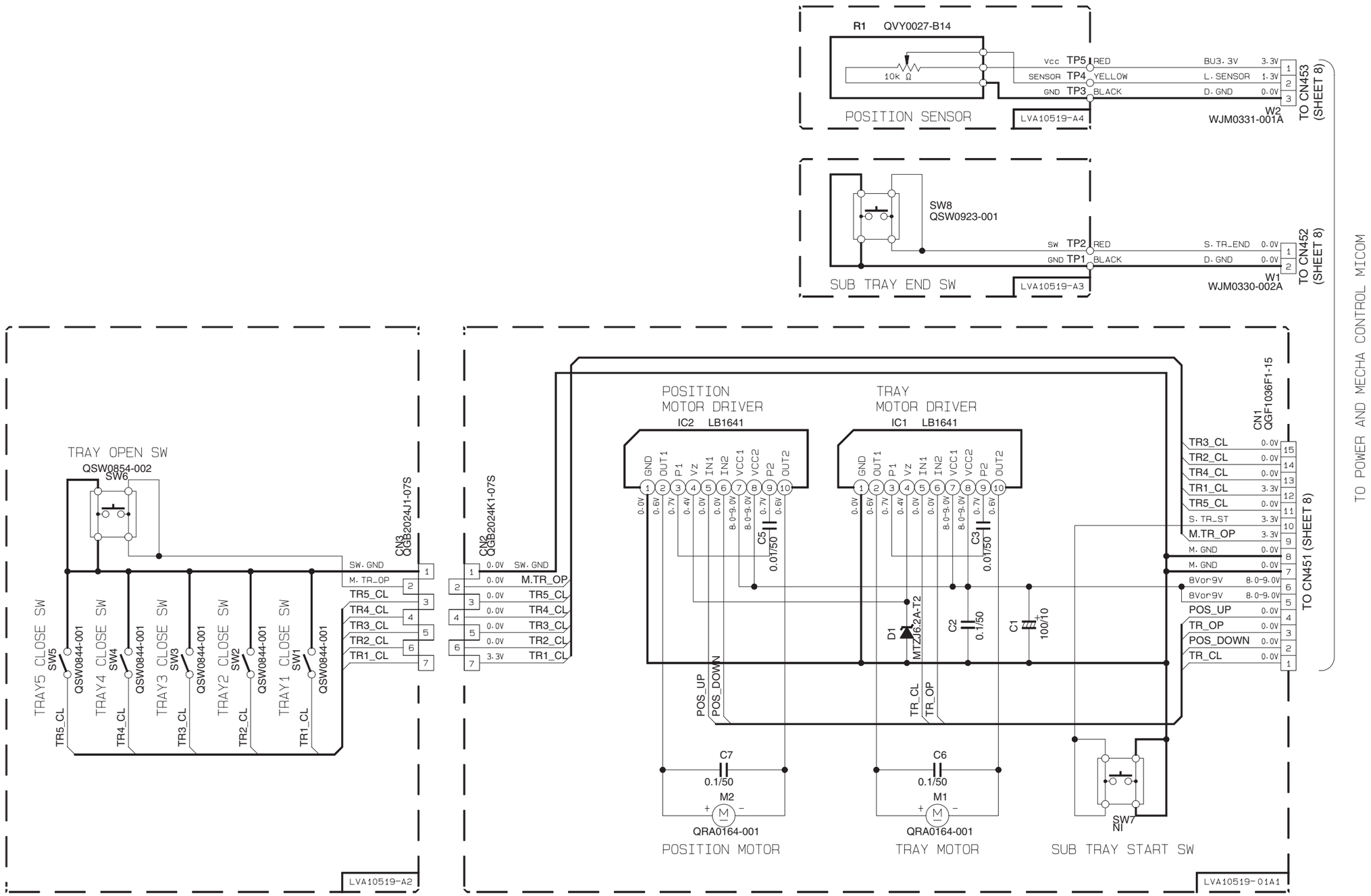

NOTES

1. VOLTAGES ARE DC-MEASURED WITH A DIGITAL VOLT METER.
   CONDITION:DISC1 STOP
2. UNLESS OTHERWISE SPECIFIED.
   ALL CAPACITORS ARE SHOWN IN THE FORM OF CAPACITANCE(μF)/RATED VOLTAGE(V).
3. NI STANDS FOR NOT INSERTED PARTS.

SHEET 9

Printed circuit boards (For DX-T7)

■ Amplifier board

Lead free solder used in the board (material : Sn-Ag-Cu, melting point : 219 Centigrade)

(Surround terminal board)

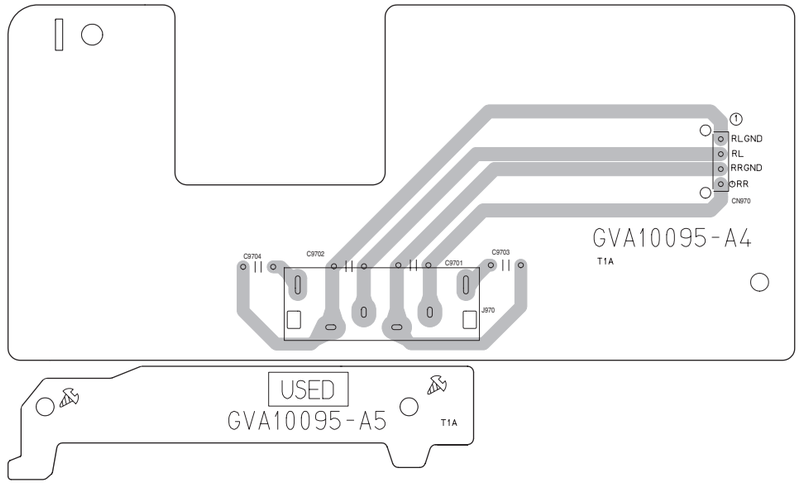

(Amplifier 2 board)

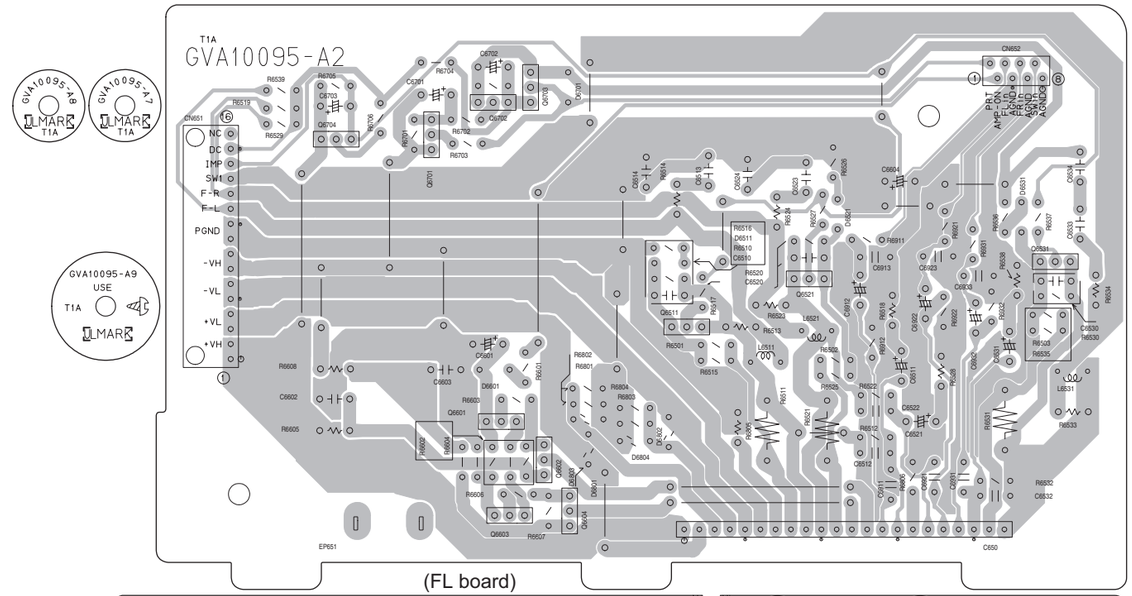

(Amplifier 1 board)

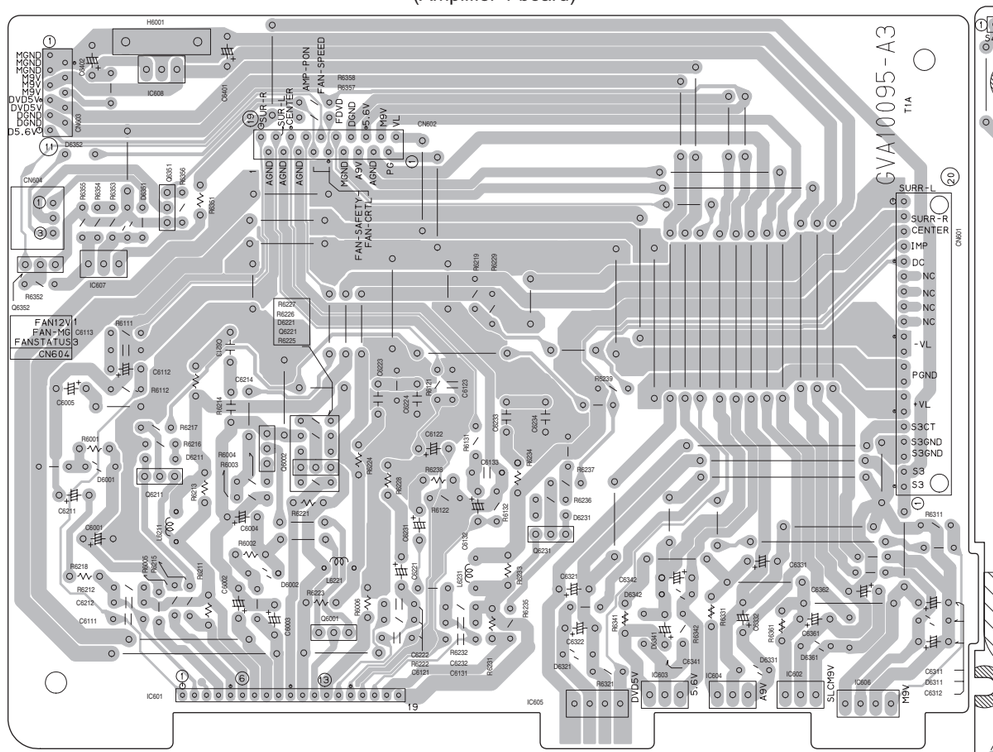

(FL board)

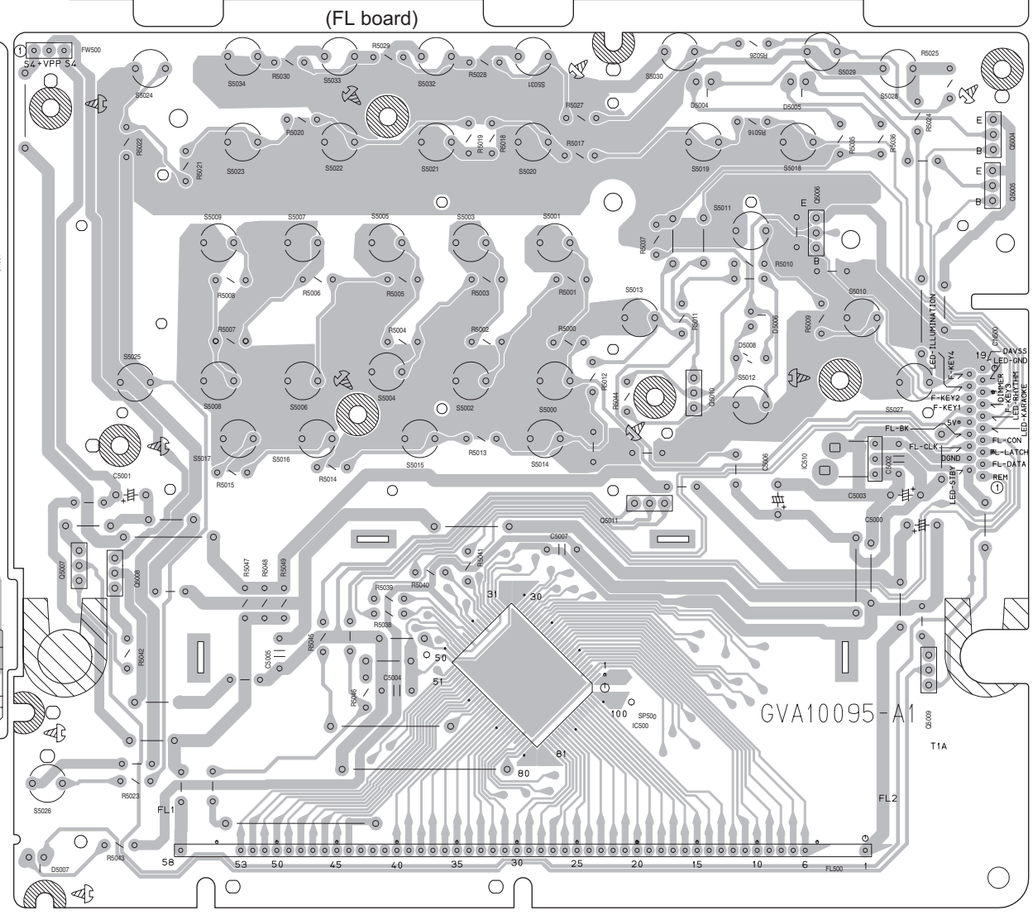

■ Main board

Lead free solder used in the board (material : Sn-Ag-Cu, melting point : 219 Centigrade)

(Microphone amplifier board)

(Main board)

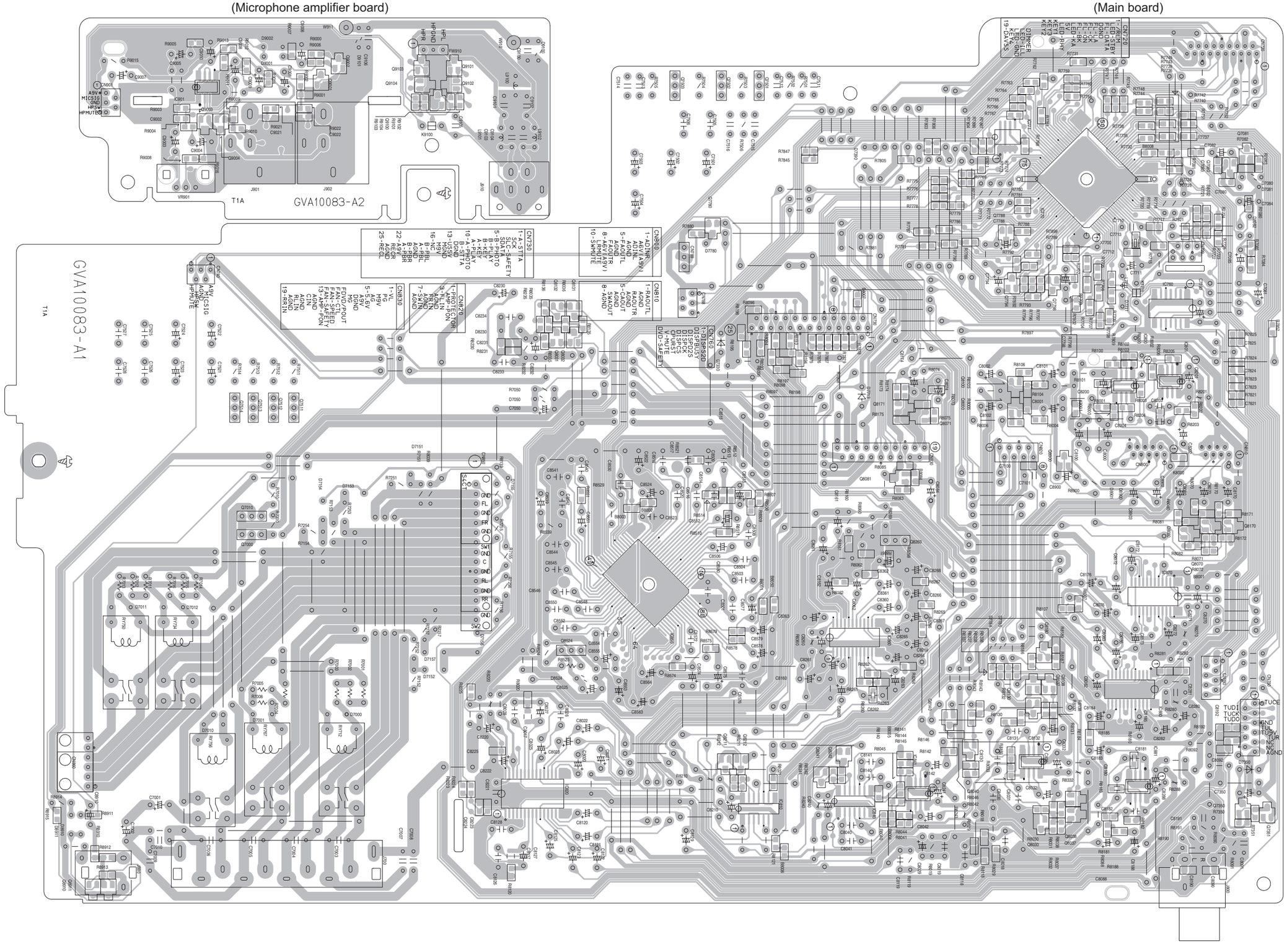

■ Primary board

Lead free solder used in the board (material : Sn-Ag-Cu, melting point : 219 Centigrade)

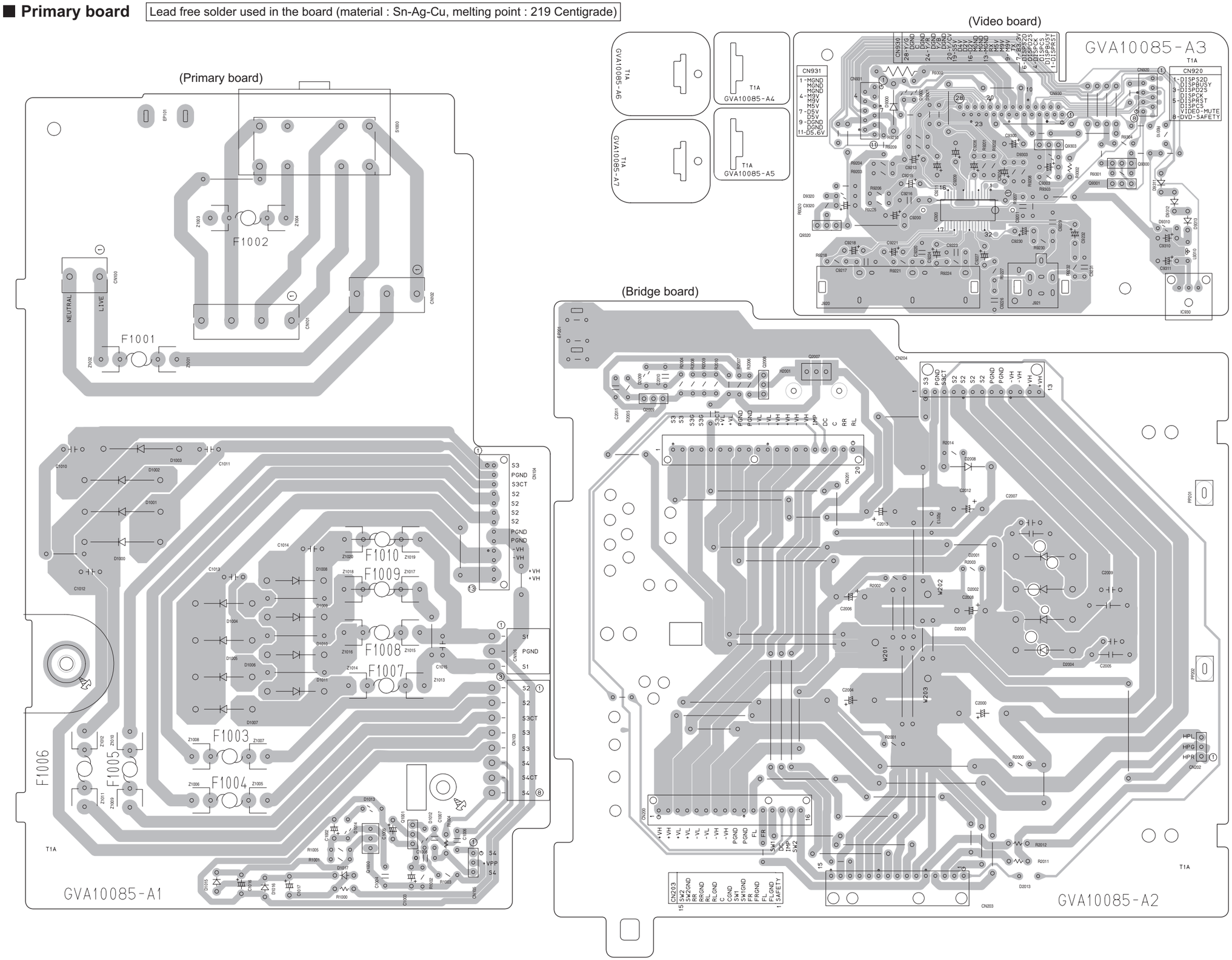

■ DVD servo board

Lead free solder used in the board (material : Sn-Ag-Cu, melting point : 219 Centigrade)

Forward side

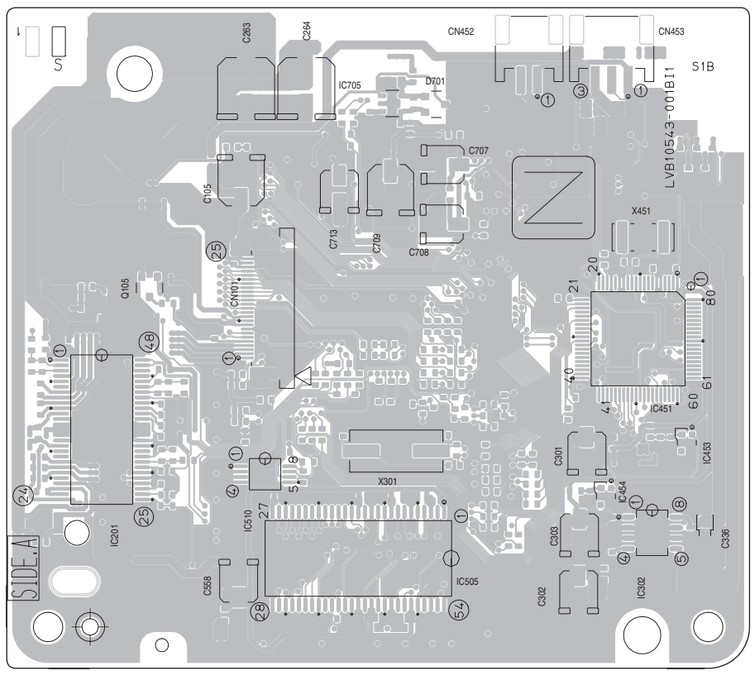

Reverse side

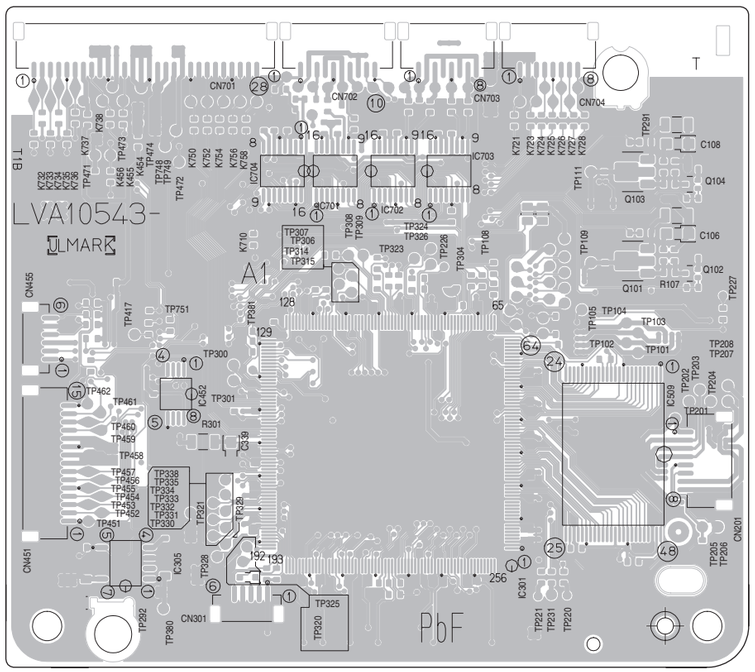

■ Loading board

Lead free solder used in the board (material : Sn-Ag-Cu, melting point : 219 Centigrade)

(Motor board)

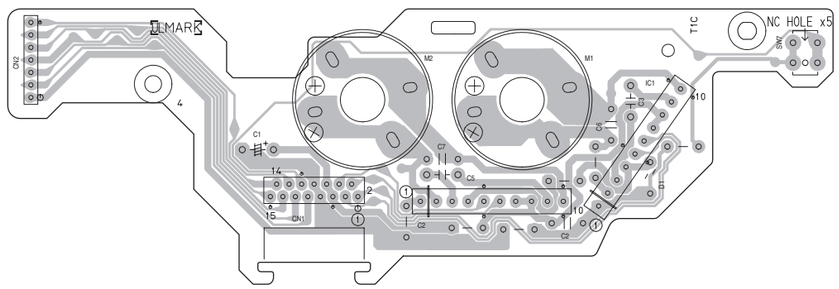

(Tray switch board)

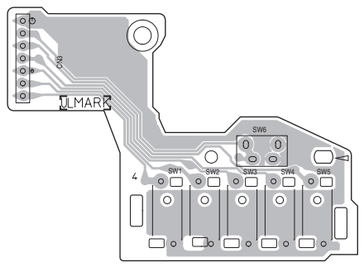

(Switch board)

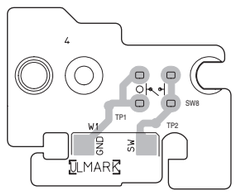

(Sensor board)

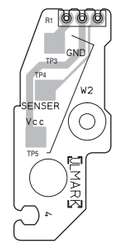

■ Cassette switch board (For A cassette)

Lead free solder used in the board (material : Sn-Ag-Cu, melting point : 219 Centigrade)

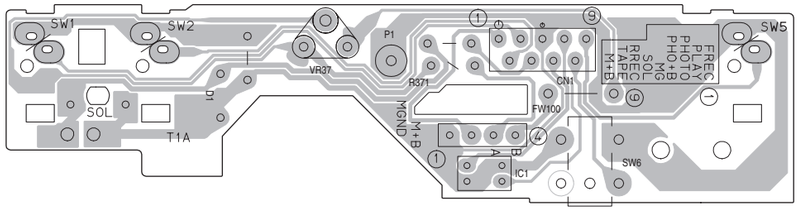

■ Cassette switch board (For B cassette)

Lead free solder used in the board (material : Sn-Ag-Cu, melting point : 219 Centigrade)

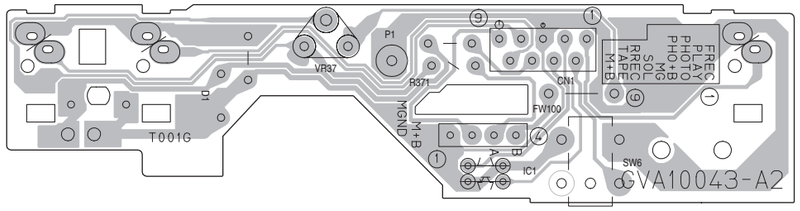

■ Head amplifier board (For A cassette)

Lead free solder used in the board (material : Sn-Ag-Cu, melting point : 219 Centigrade)

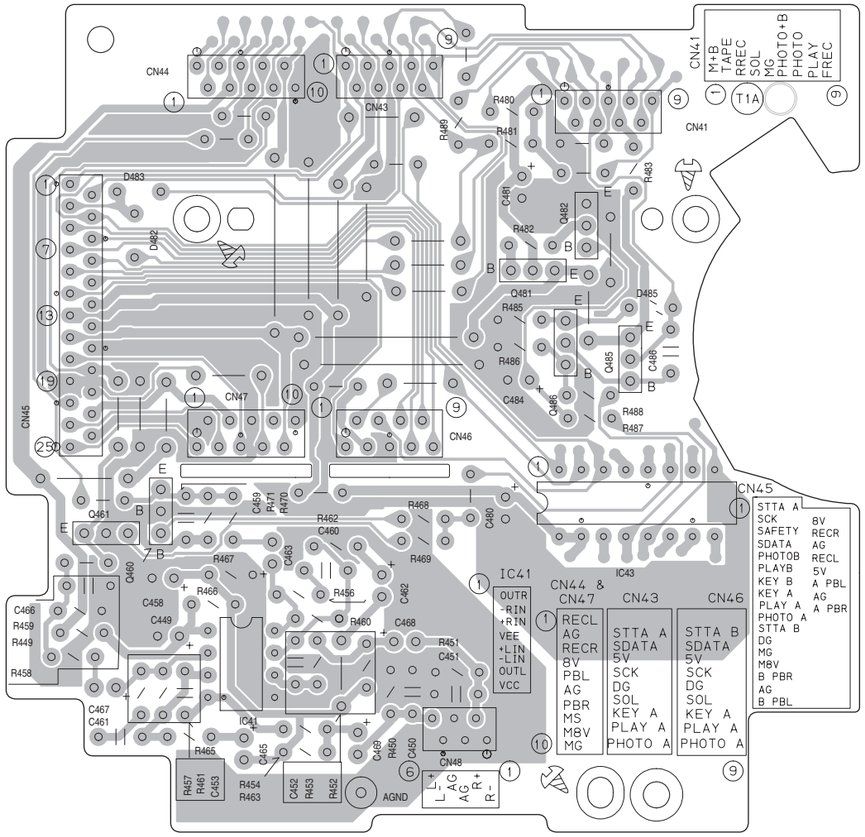

■ Head amplifier board (For B cassette)

Lead free solder used in the board (material : Sn-Ag-Cu, melting point : 219 Centigrade)

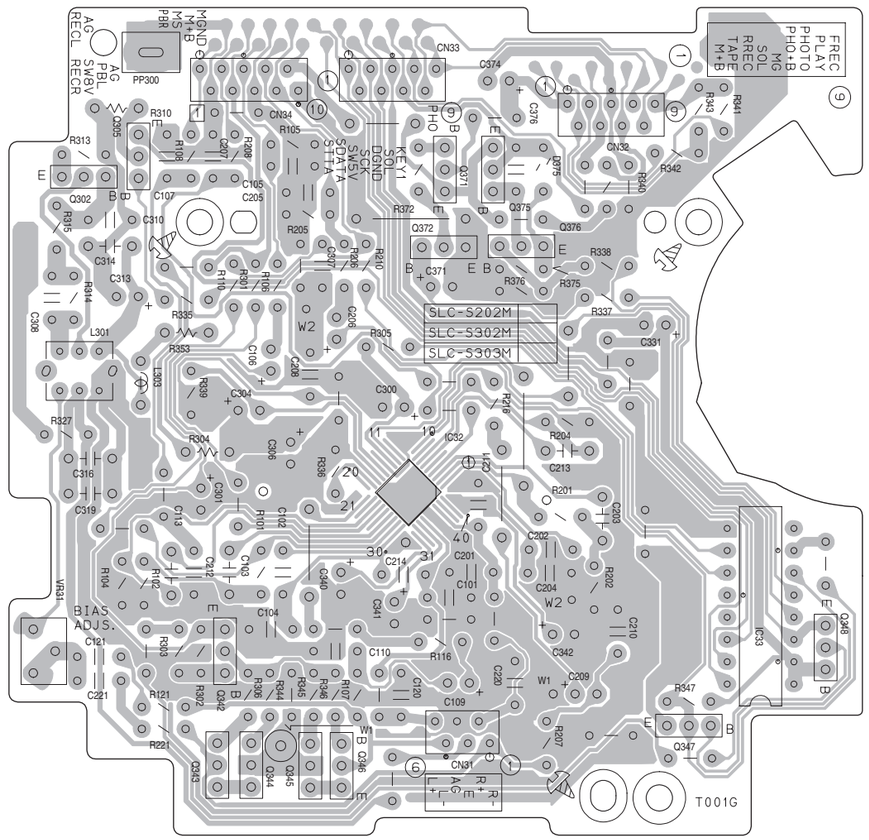

Block diagram (For DX-T5)

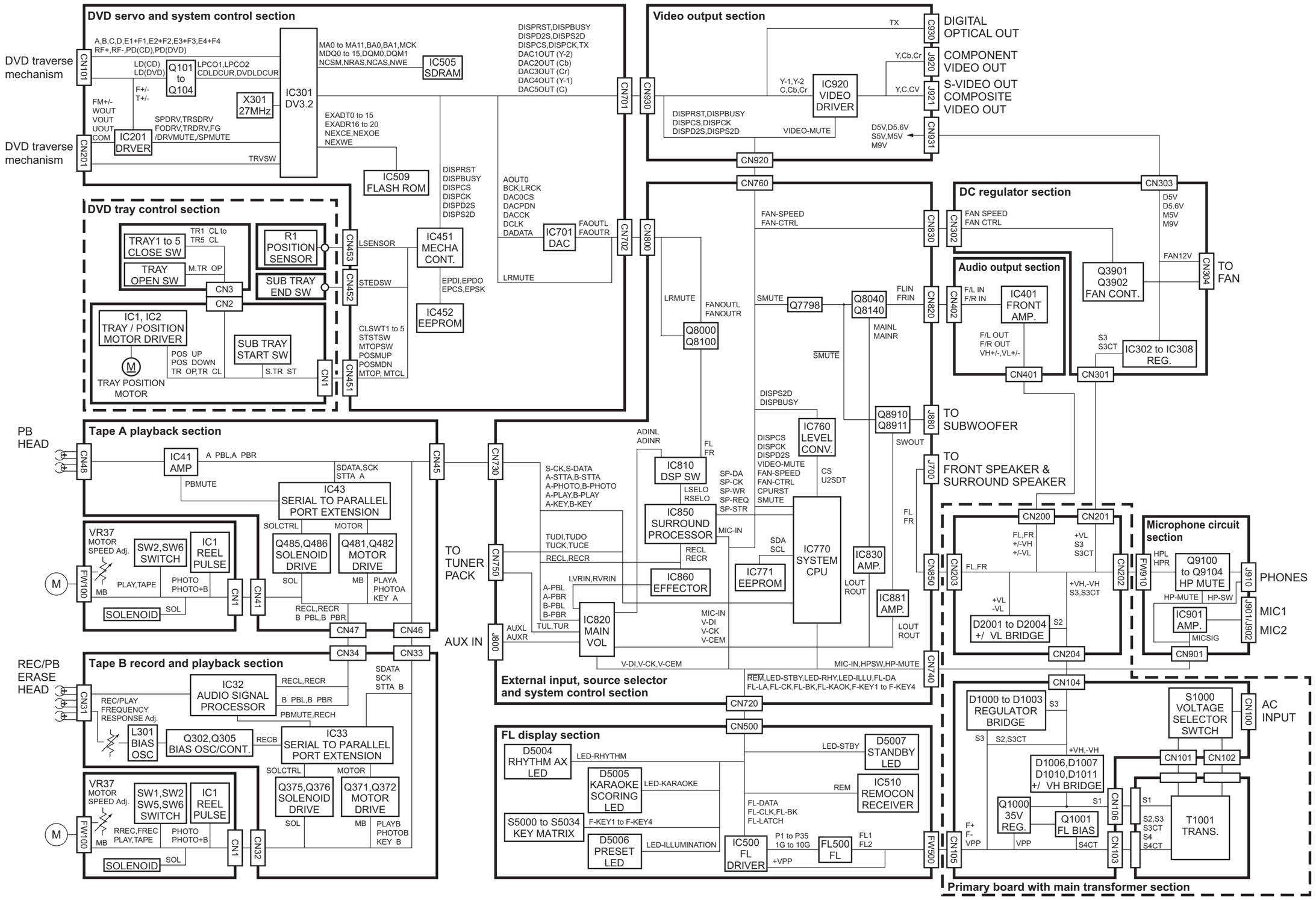

Standard schematic diagrams (For DX-T5)

■ Primary board with main transformer section

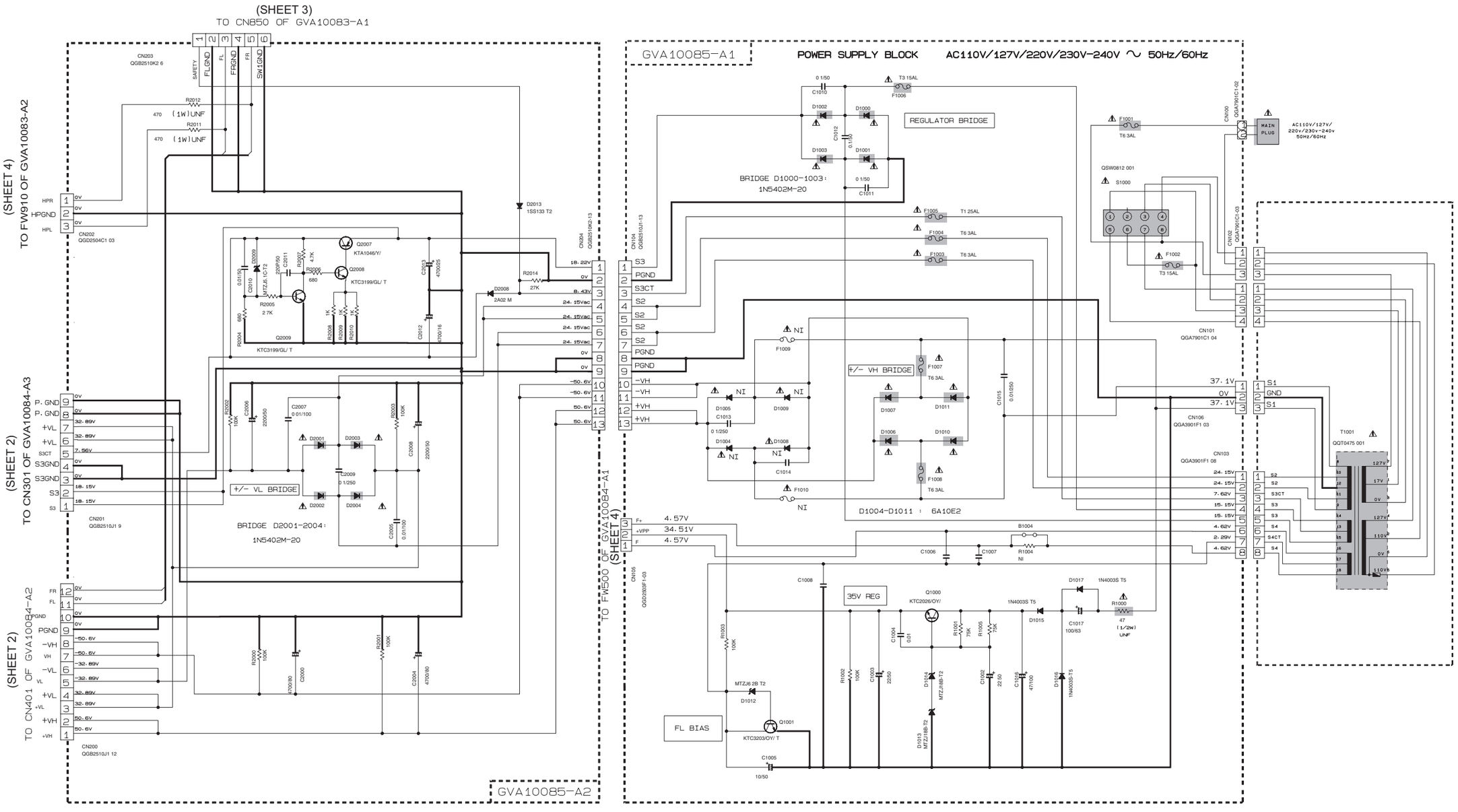

NOTES

1. VOLTAGES ARE DC-MEASURED WITH A DIGITAL VOLT METER OR OSCILLOSCOPE WITHOUT INPUT SIGNAL.
   CONDITION --- AUX MODE. VOL MIN. BASS OFF
2. UNLESS OTHERWISE SPECIFIED
   RESISTORS ARE 1/4W ± 5% CARBON RESISTOR.
   ALL RESISTANCE VALUES ARE IN OHM(Ω).
   ALL CAPACITORS ARE CERAMIC CAPACITOR OR MYLAR CAPACITOR.
   ALL CAPACITANCE VALUES ARE IN μF(P=pF).
   ALL INDUCTANCE VALUES ARE IN μH(m=mH).
   ALL E.CAPACITORS ARE SHOWN IN THE FORM OF CAPACITANCE (μF)/RATED VOLTAGE (V).
   ALL DIODES ARE 1SS119-041-T2

VOLTAGE SELECTOR LOCATION

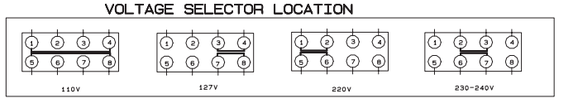

EXPLANATION OF OVERALL SCHEMATIC	
MODEL	DX-T5

SHEET NUMBER	
1	PRIMARY BOARD WITH MAIN TRANSFORMER
2	DC REGULATOR/AUDIO OUTPUT
3	EXTERNAL INPUT. SOURCE SELECTOR SYSTEM CONTROL
4	VIDEO OUTPUT. MIC CIRCUIT FL DISPLAY. USER CONTROL KEYS
5	TAPEA-SLC-S401M. PLAYBACK ONLY.
6	TAPEB-SLCS302M. RECORD PLAYBACK.
7	DVD SERVO AND SYSTEM CONTROL(1/2)
8	DVD SERVO AND SYSTEM CONTROL(2/2)

MODEL VERSIONS	COUNTRY CODES
DX-T5: UW. UY. US. UN. UX. UG	UW - SOUTH AMERICA
	UY - ARGENTINA
DX-T7: US. UN. UX. UG. UW. A	US - SINGAPORE
	UN - INDONESIA
	UX - SAUDI ARABIA
DX-T9: UW. US. UN. UX. A. UG	A - AUSTRALIA
	UG - EGYPT. SOUTH AFRICA. TURKEY

⚠ Parts are safety assurance parts.
When replacing those parts make sure to use the specified one.

SHEET 1

■ DC regulator and audio output section

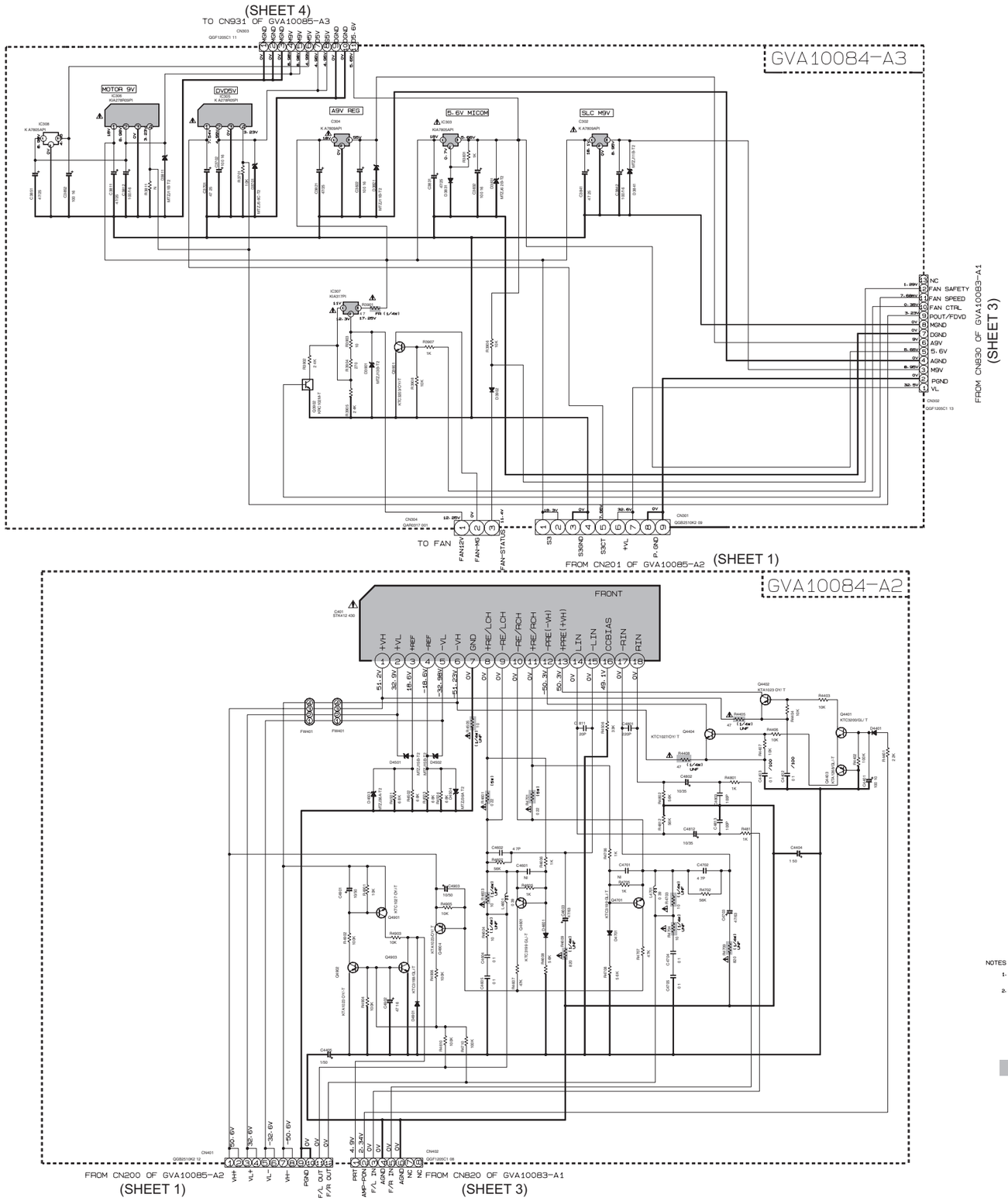

NOTES

1. VOLTAGES ARE DC-MEASURED WITH A DIGITAL VOLT METER OR OSCILLOSCOPE WITHOUT INPUT SIGNAL.
   CONDITION —— AUX MODE· VOL MIN· BASS OFF
2. UNLESS OTHERWISE SPECIFIED
   RESISTORS ARE 1/4W ± 5% CARBON RESISTOR.
   ALL RESISTANCE VALUES ARE IN OHM(Ω).
   ALL CAPACITORS ARE CERAMIC CAPACITOR OR MYLAR CAPACITOR.
   ALL CAPACITANCE VALUES ARE IN #F(PmF).
   ALL INDUCTANCE VALUES ARE IN ±H(mmH).
   ALL E-CAPACITORS ARE SHOWN IN THE FORM OF CAPACITANCE (#F)/RATED VOLTAGE (V).
   ALL DIODES ARE 1SS119-041-T2

⚠ Parts are safety assurance parts.
When replacing those parts make sure to use the specified one.

SHEET 2

■ External input, source selector and system control section

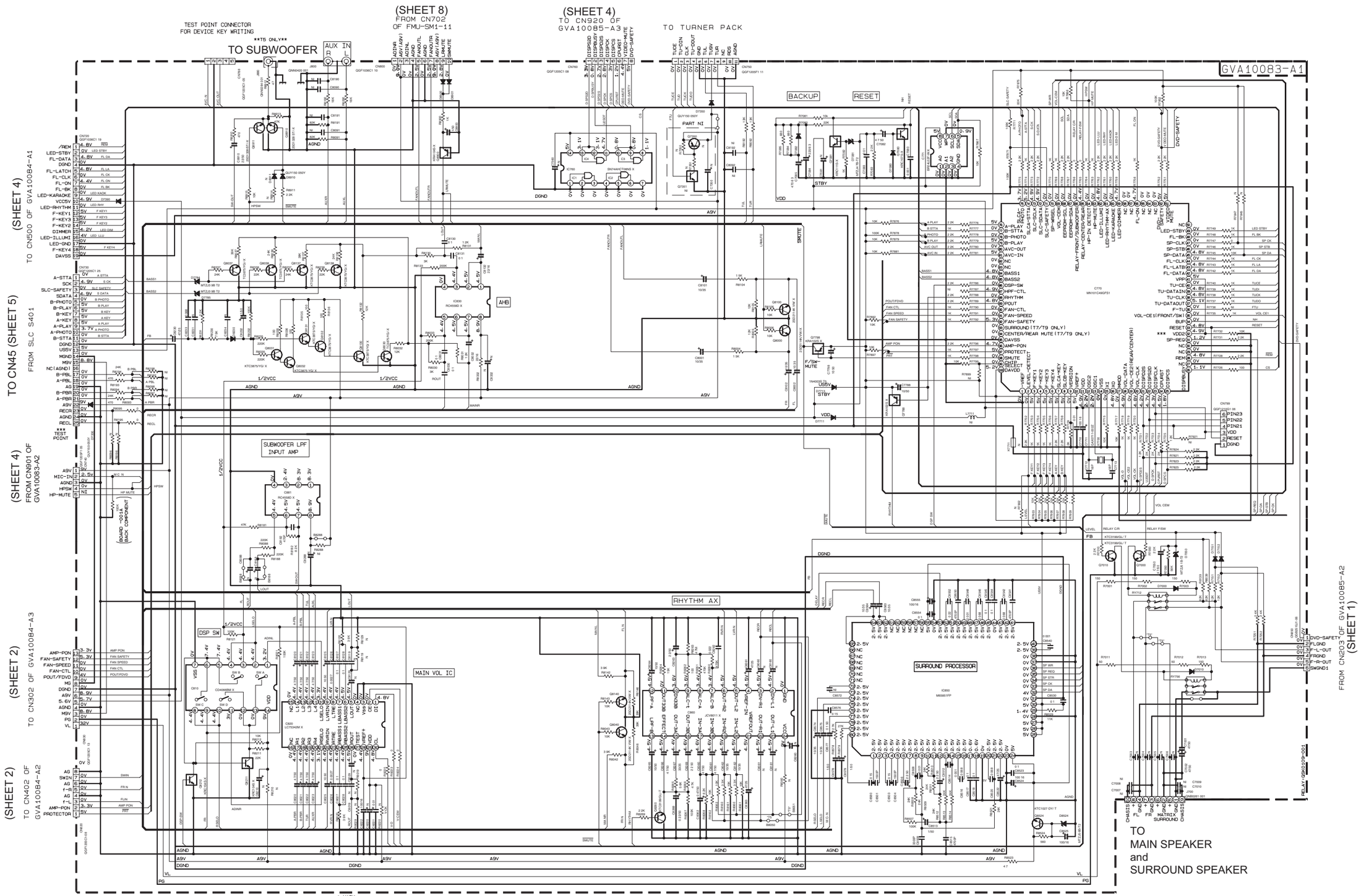

* MARK

VERSIONS	R7709	R7809
UY	10K	3.3K
UX-UG	10K	15K
UW	10K	27K
US-UN	10K	–

NOTES

1. VOLTAGES ARE DC-MEASURED WITH A DIGITAL VOLT METER OR OSCILLOSCOPE WITHOUT INPUT SIGNAL. CONDITION ---- CD STOP MODE
2. UNLESS OTHERWISE SPECIFIED.
   ALL RESISTORS ARE 1/4W ± 5% CARBON FILM RESISTOR OR 0.063W ±5% THICK FILM CHIP RESISTOR
   ALL CAPACITORS ARE CERAMIC CAPACITOR OR MYLAR CAPACITOR.
   ALL RESISTANCE VALUES ARE IN OHM(Ω).
   ALL CAPACITANCE VALUES ARE IN F(P=pF).
   ALL E.CAPACITORS ARE SHOWN IN THE FORM OF CAPACITANCE(μF)/RATED VOLTAGE (V).
   ALL INDUCTANCE VALUES ARE IN μH(m=mH).
   ALL DIODES ARE 1SS119-041-T2
   ALL FERRITE BEADS ARE NGR0007-002X

SHEET 3

■ Video output, microphone circuit, FL display and user control keys section

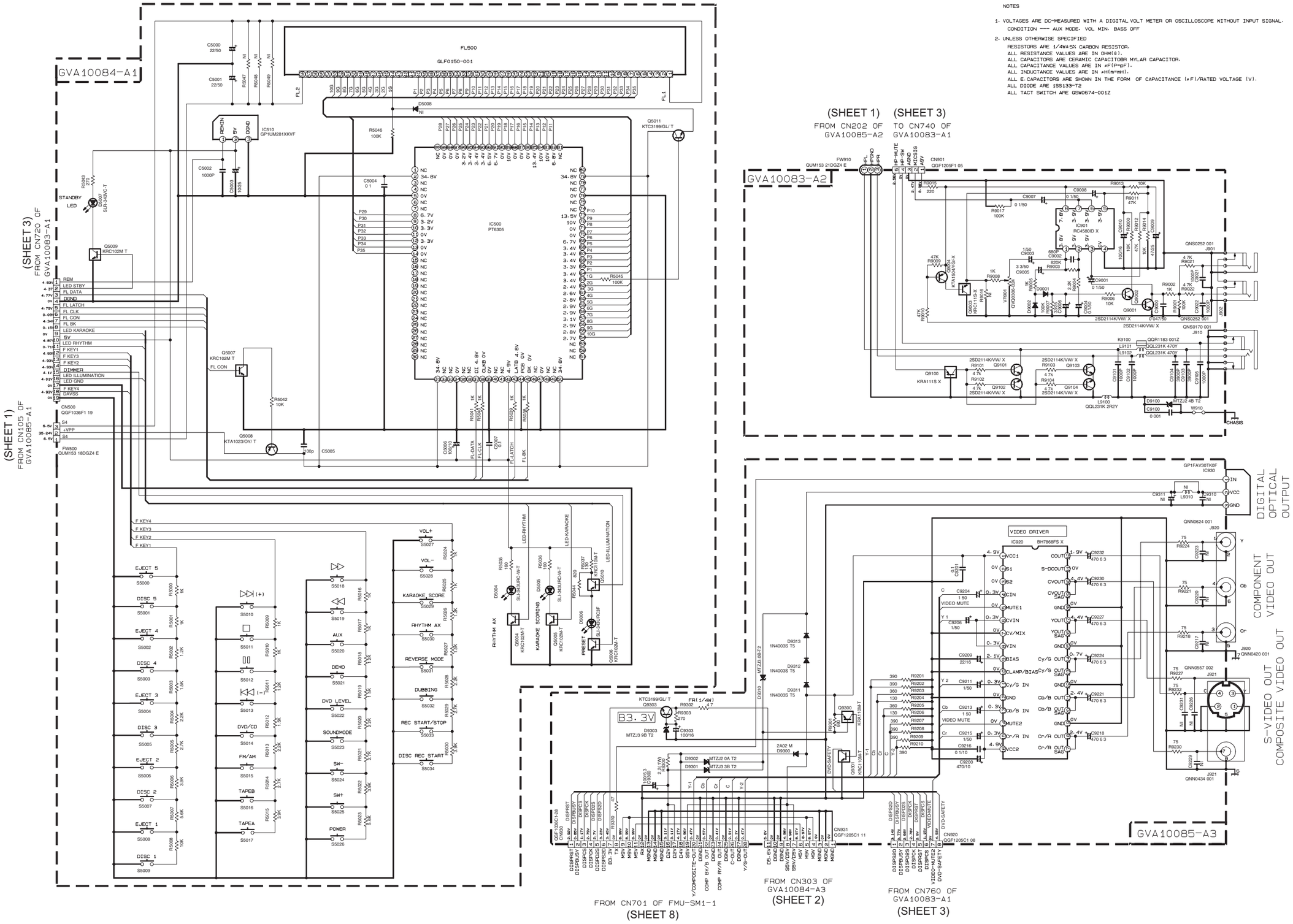

NOTES

1. VOLTAGES ARE DC-MEASURED WITH A DIGITAL VOLT METER OR OSCILLOSCOPE WITHOUT INPUT SIGNAL.
   CONDITION ---- AUX MODE. VOL MIN. BASS OFF
2. UNLESS OTHERWISE SPECIFIED
   RESISTORS ARE 1/4W±5% CARBON RESISTOR.
   ALL RESISTANCE VALUES ARE IN Ω(MΩ).
   ALL CAPACITORS ARE CERAMIC CAPACITOR MYLAR CAPACITOR.
   ALL CAPACITANCE VALUES ARE IN μF(P=pF).
   ALL INDUCTANCE VALUES ARE IN μH(m=mH).
   ALL E.CAPACITORS ARE SHOWN IN THE FORM OF CAPACITANCE (μF)/RATED VOLTAGE (V).
   ALL DIODE ARE 1SS133-T2
   ALL TACT SWITCH ARE QSW0674-001Z

SHEET 4

■ Tape A playback section

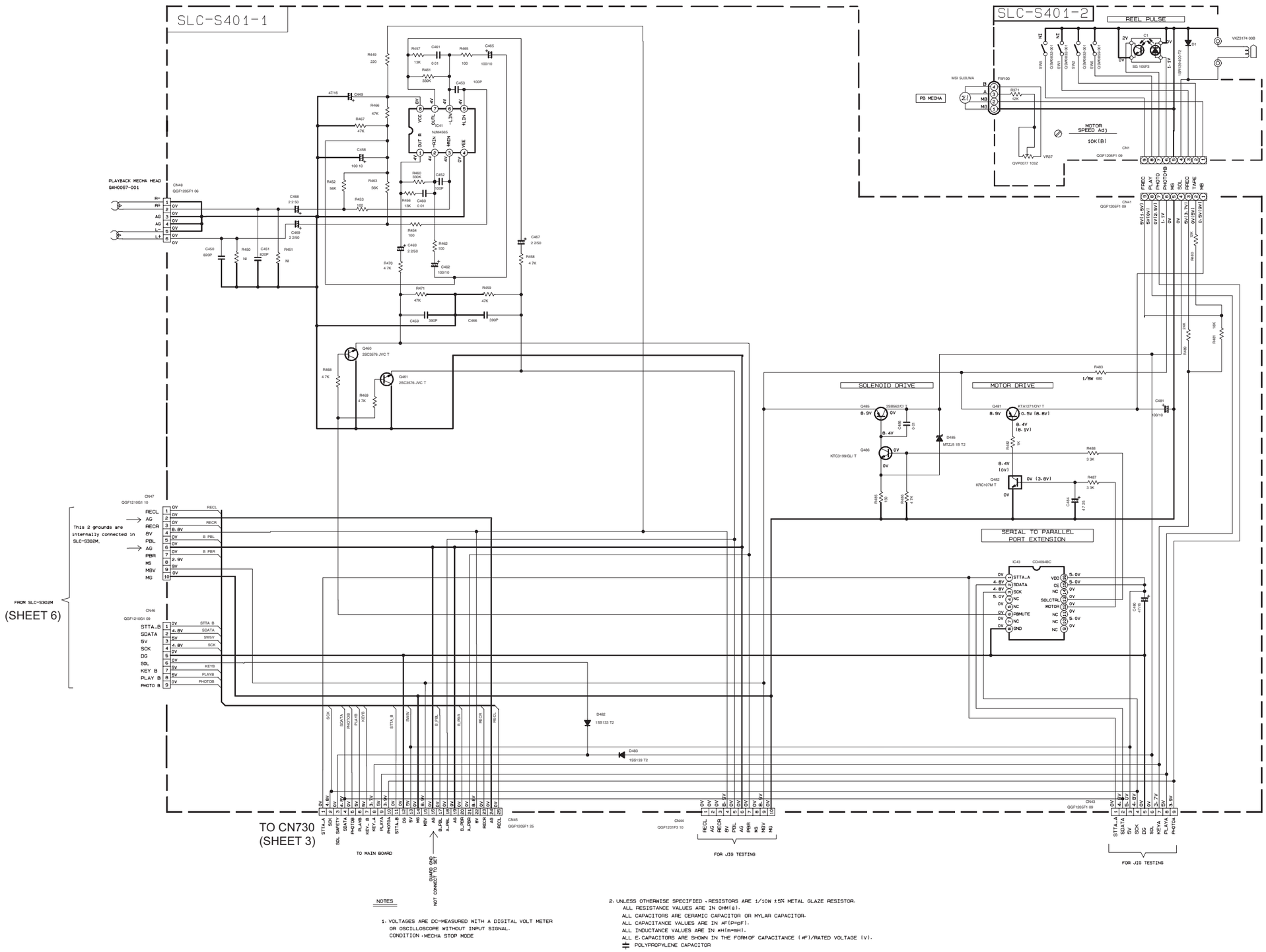

NOTES

1. VOLTAGES ARE DC-MEASURED WITH A DIGITAL VOLT METER OR OSCILLOSCOPE WITHOUT INPUT SIGNAL.
CONDITION : MECHA STOP MODE

2. UNLESS OTHERWISE SPECIFIED : RESISTORS ARE 1/10W ±5% METAL GLAZE RESISTOR.
ALL RESISTANCE VALUES ARE IN Ω=M(Ω).
ALL CAPACITORS ARE CERAMIC CAPACITOR OR MYLAR CAPACITOR.
ALL CAPACITANCE VALUES ARE IN #F(P=pF).
ALL INDUCTANCE VALUES ARE IN #H(m=mH).
ALL E.CAPACITORS ARE SHOWN IN THE FORM OF CAPACITANCE (#F)/RATED VOLTAGE (V).
POLYPROPYLENE CAPACITOR

SHEET 5

■ Tape B record and playback section

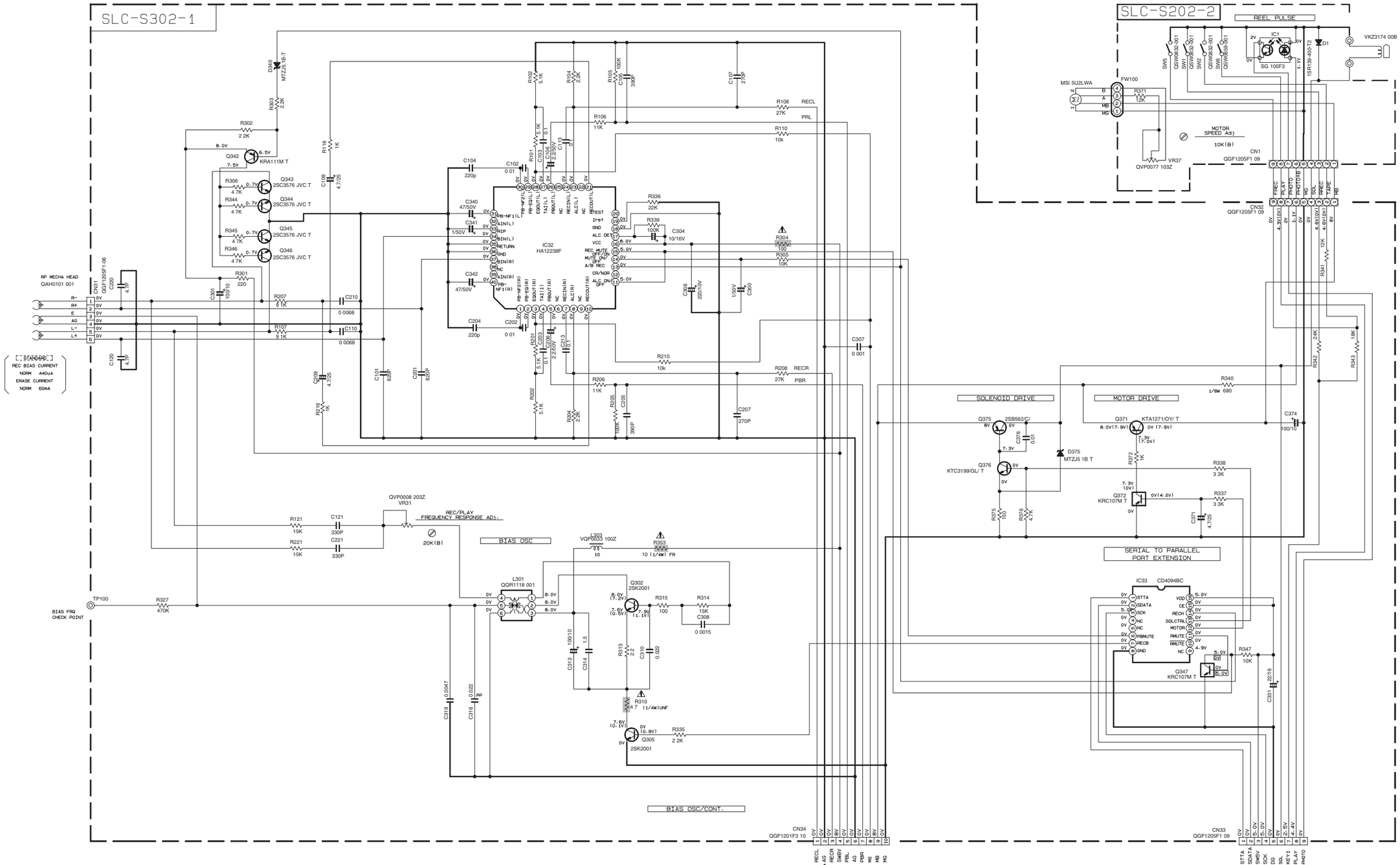

NOTES

1. VOLTAGES ARE DC-MEASURED WITH A DIGITAL VOLT METER OR OSCILLOSCOPE WITHOUT INPUT SIGNAL.
CONDITION : MECHA STOP MODE

2. UNLESS OTHERWISE SPECIFIED · RESISTORS ARE 1/10W ±5% METAL GLAZE RESISTOR.
ALL RESISTANCE VALUES ARE IN OHM(Ω).
ALL CAPACITORS ARE CERAMIC CAPACITOR OR MYLAR CAPACITOR.
ALL CAPACITANCE VALUES ARE IN μF(P=pF).
ALL INDUCTANCE VALUES ARE IN μH(m=mH).
ALL E.CAPACITORS ARE SHOWN IN THE FORM OF CAPACITANCE (μF)/RATED VOLTAGE (V).
POLYPROPYLENE CAPACITOR

⚠ Parts are safety assurance parts. When replacing those parts make sure to use the specified one.

SHEET 6

■ DVD servo and system control section (1/2)

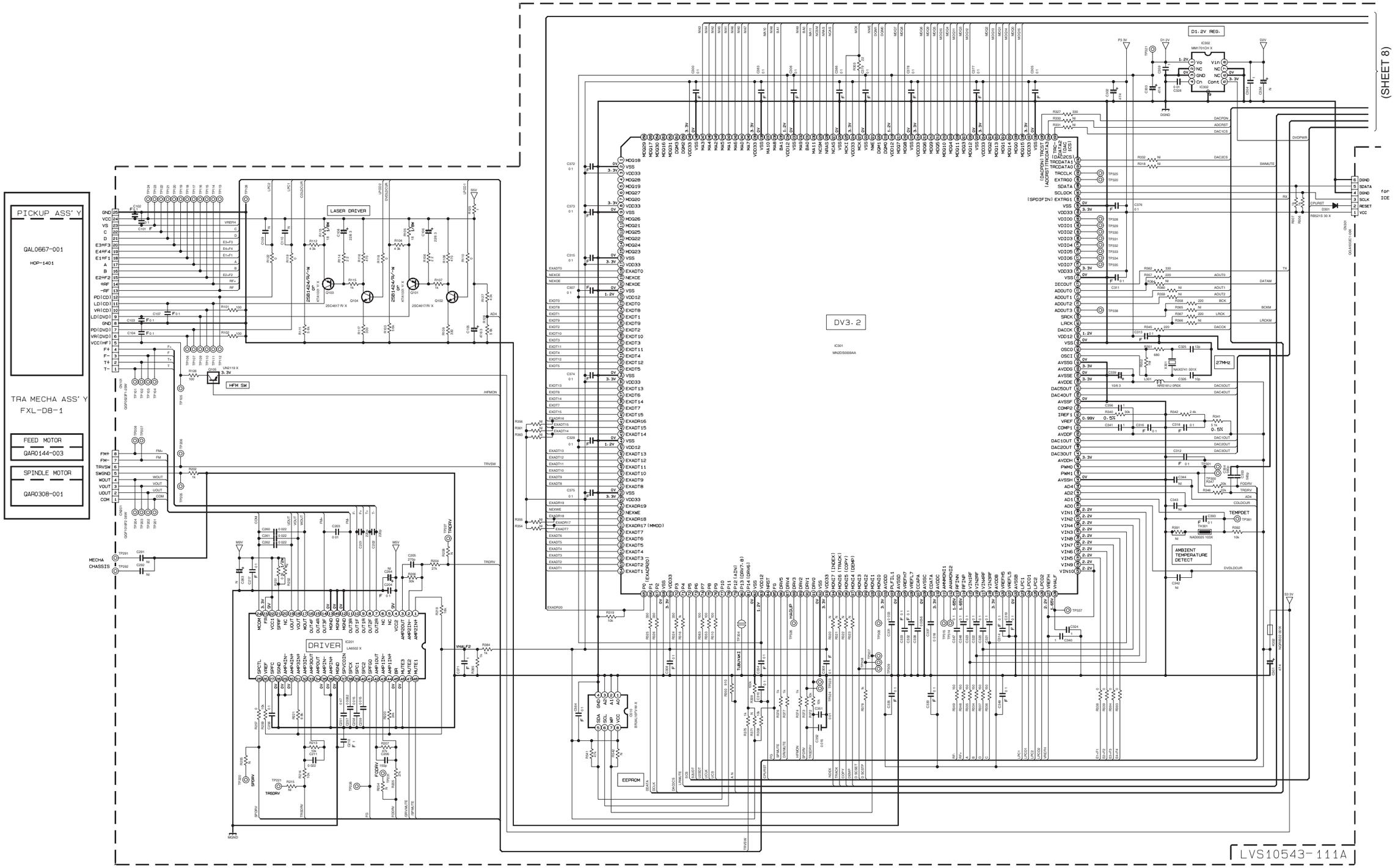

SHEET 7

■ DVD servo and system control section (2/2)

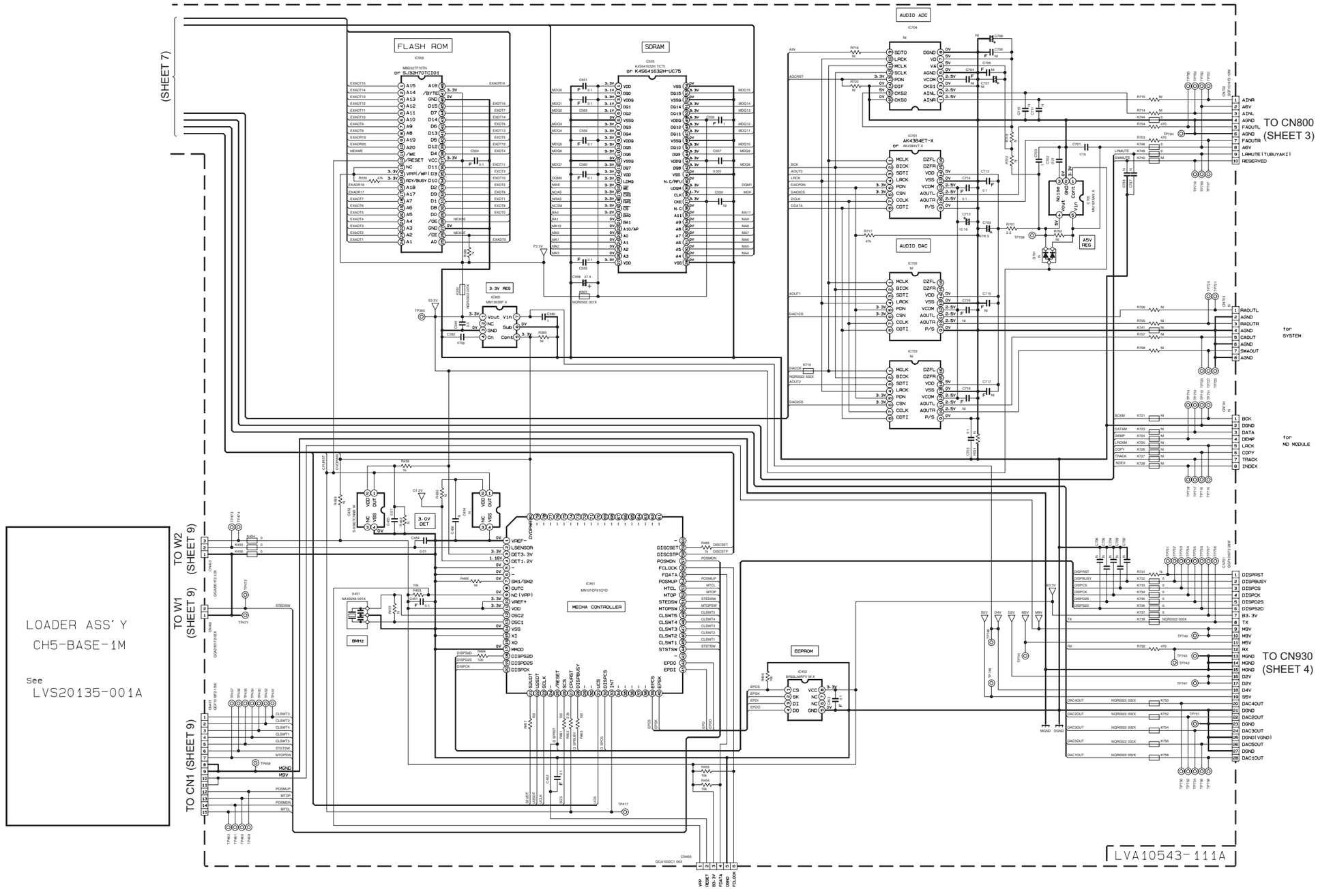

NOTES

1. VOLTAGES ARE DC-MEASURED WITH A DIGITAL VOLT METER WITHOUT INPUT SIGNAL.
   CONDITION ---- A DVD disc in the Tray 1. and STOP mode.

2. UNLESS OTHERWISE SPECIFIED.
   ALL RESISTORS ARE 1/16W ±5% METAL GLAZE RESISTOR. OR 0.5% METAL GLAZE RESISTOR.
   ALL CAPACITORS ARE 50V. 25V. 16V. 10V or 6.3V CERAMIC CAPACITOR.
   ALL RESISTANCE VALUES ARE IN OHM(Ω).
   ALL CAPACITANCE VALUES ARE IN μF(=μF).
   ALL E.CAPACITORS ARE SHOWN IN THE FORM OF CAPACITANCE(μF)/RATED VOLTAGE (V).
   ALL INDUCTANCE VALUES ARE IN μH(=mH).

3. NI STANDS FOR NOT INSERTED PARTS.

4. DIGITAL TRANSISTOR

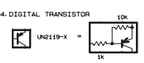

SHEET 8

■ DVD tray control section

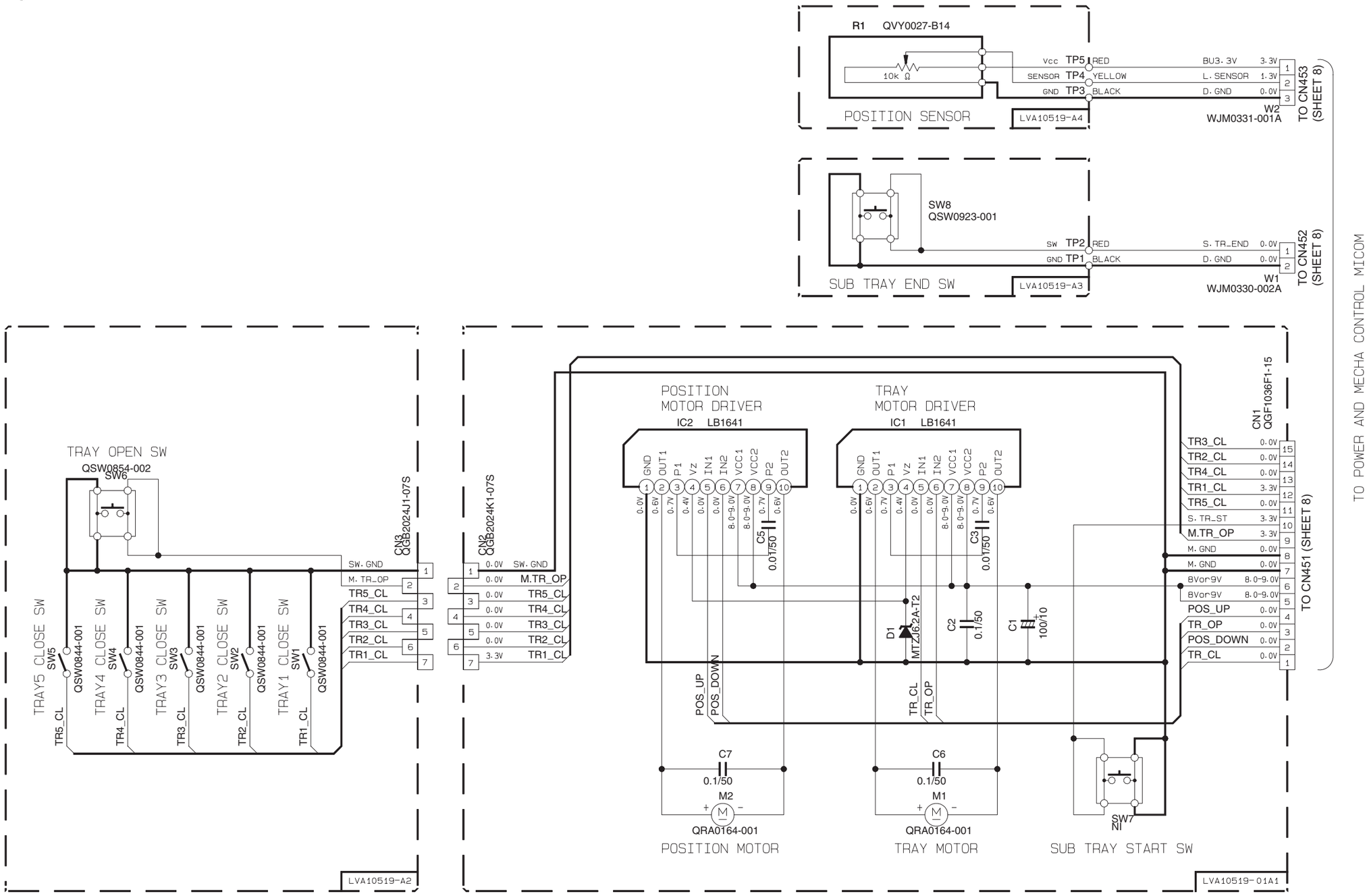

NOTES

1. VOLTAGES ARE DC-MEASURED WITH A DIGITAL VOLT METER.
   CONDITION:DISC1 STOP
2. UNLESS OTHERWISE SPECIFIED.
   ALL CAPACITORS ARE SHOWN IN THE FORM OF CAPACITANCE(μF)/RATED VOLTAGE(V).
3. NI STANDS FOR NOT INSERTED PARTS.

SHEET 9

Printed circuit boards (For DX-T5)

■ Amplifier board

Lead free solder used in the board (material : Sn-Ag-Cu, melting point : 219 Centigrade)

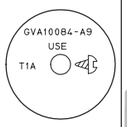

(Amplifier 2 board)

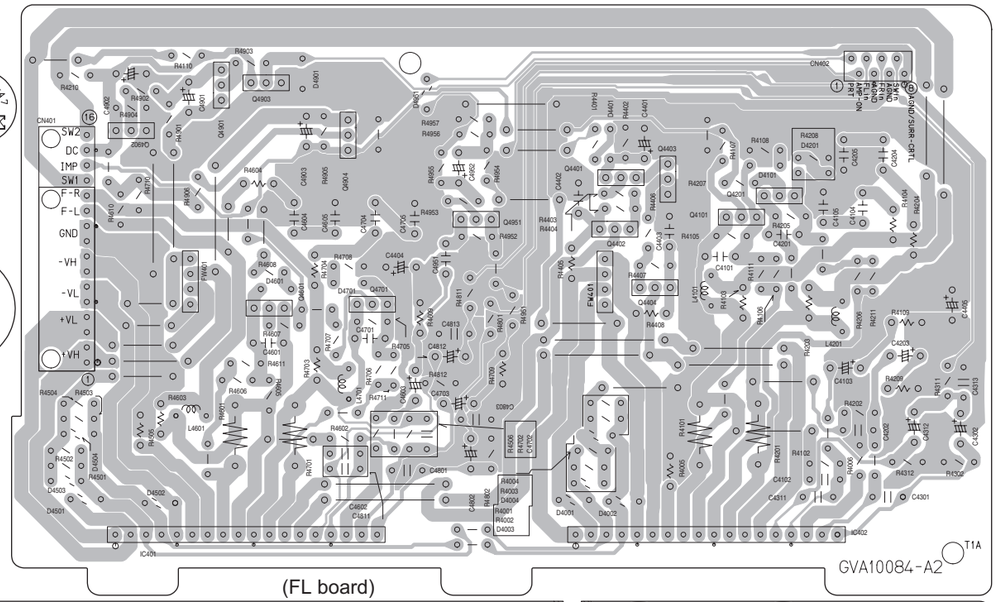

(Amplifier 1 board)

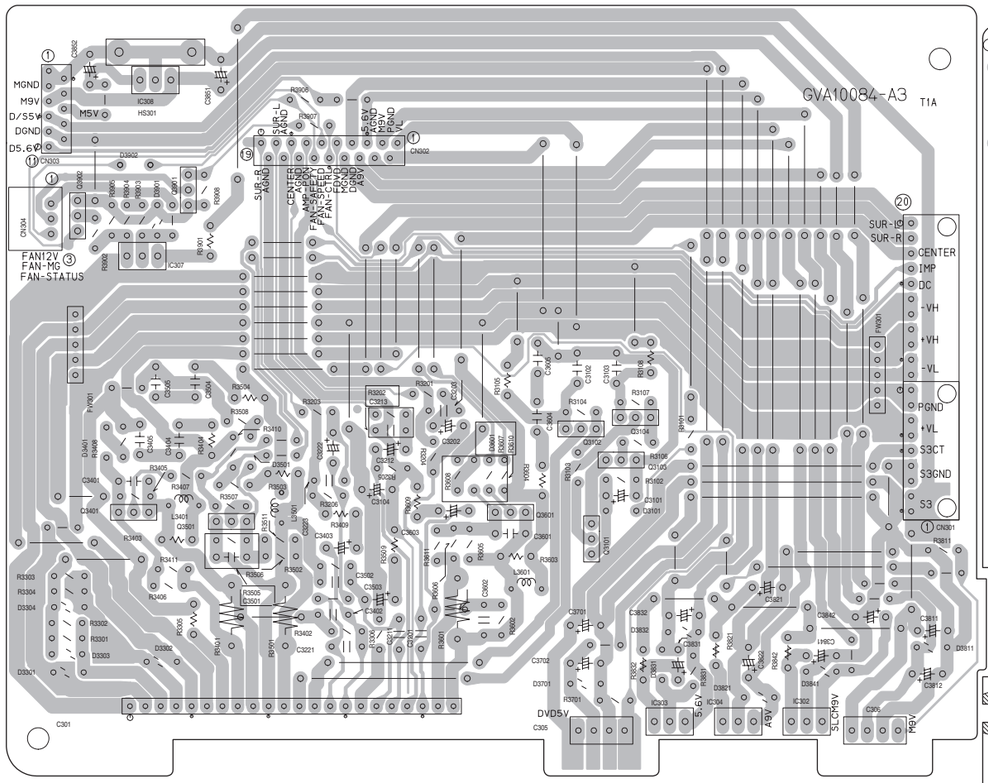

(FL board)

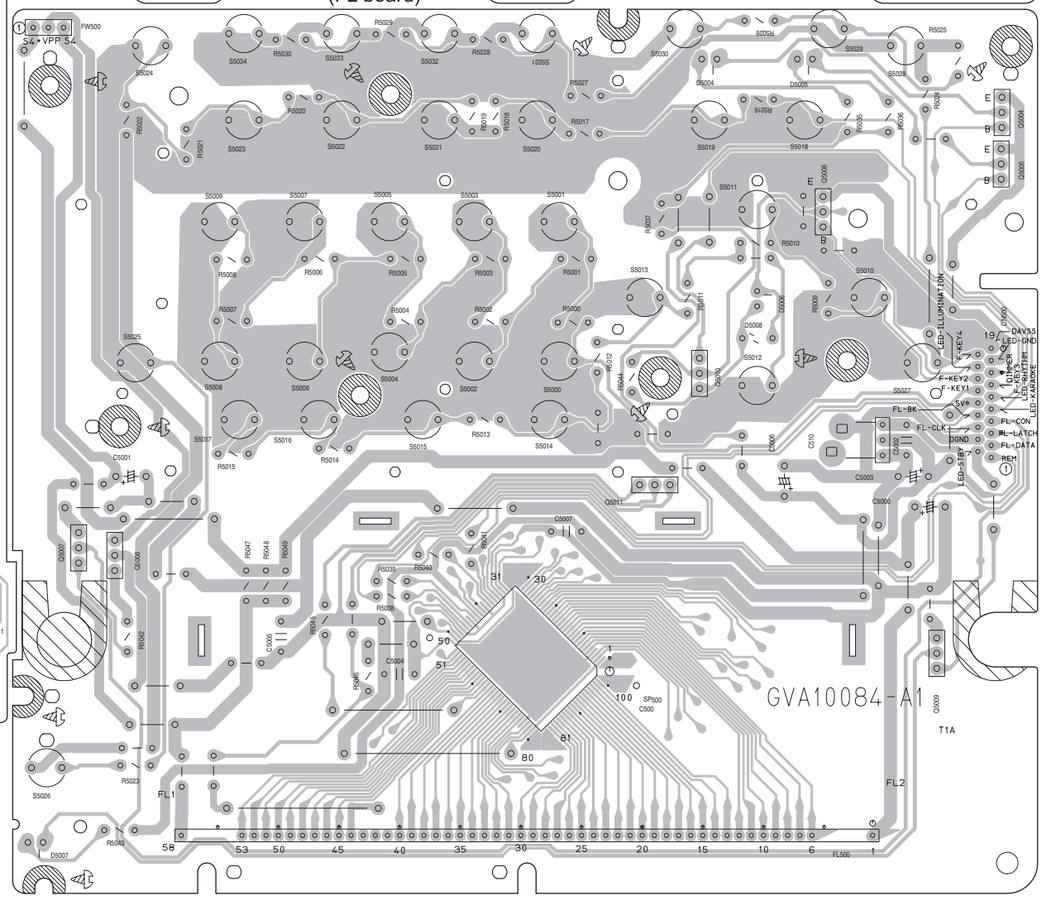

■ Main board

Lead free solder used in the board (material : Sn-Ag-Cu, melting point : 219 Centigrade)

(Microphone amplifier board)

(Main board)

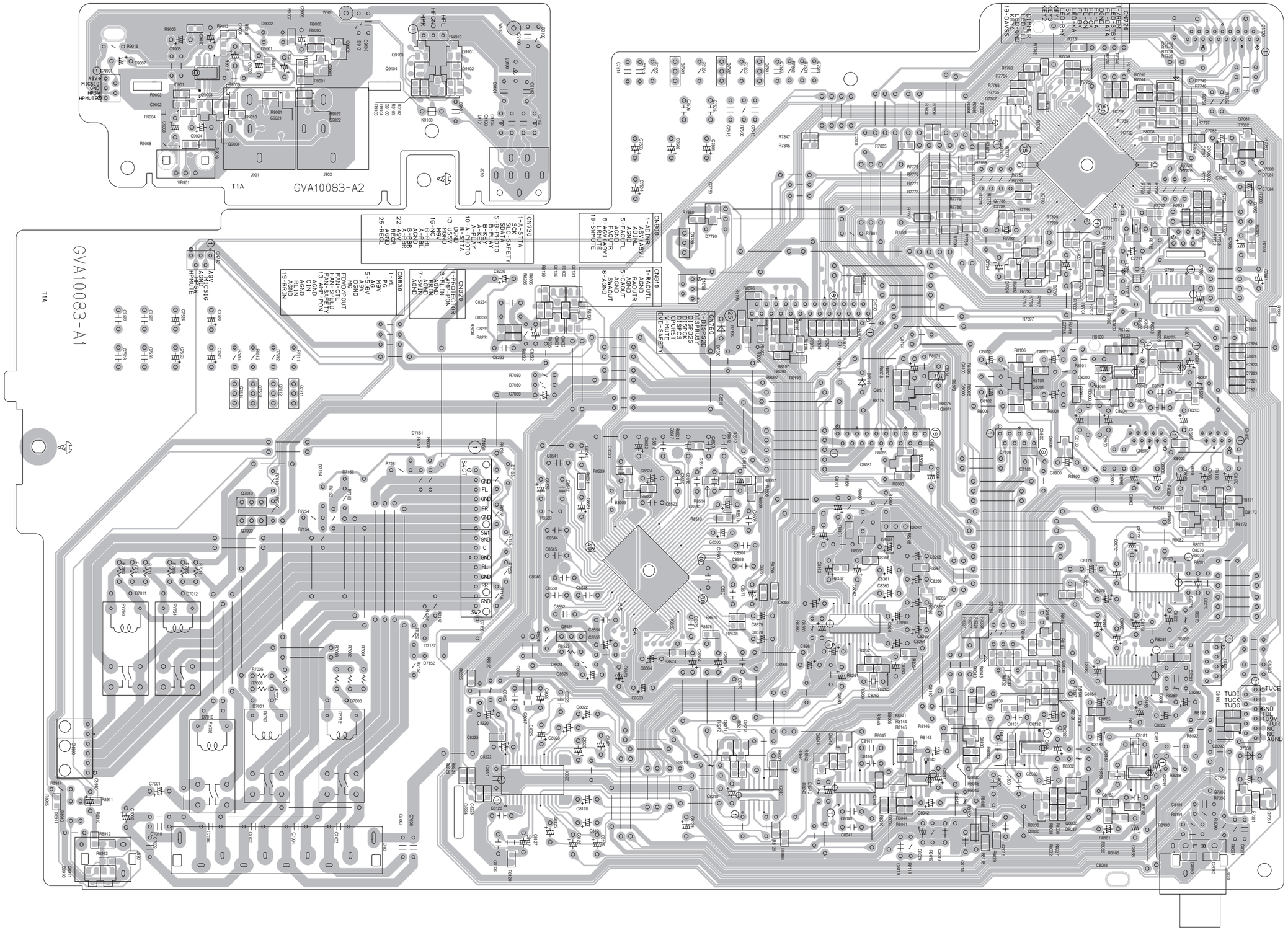

■ Primary board

Lead free solder used in the board (material : Sn-Ag-Cu, melting point : 219 Centigrade)

(Primary board)

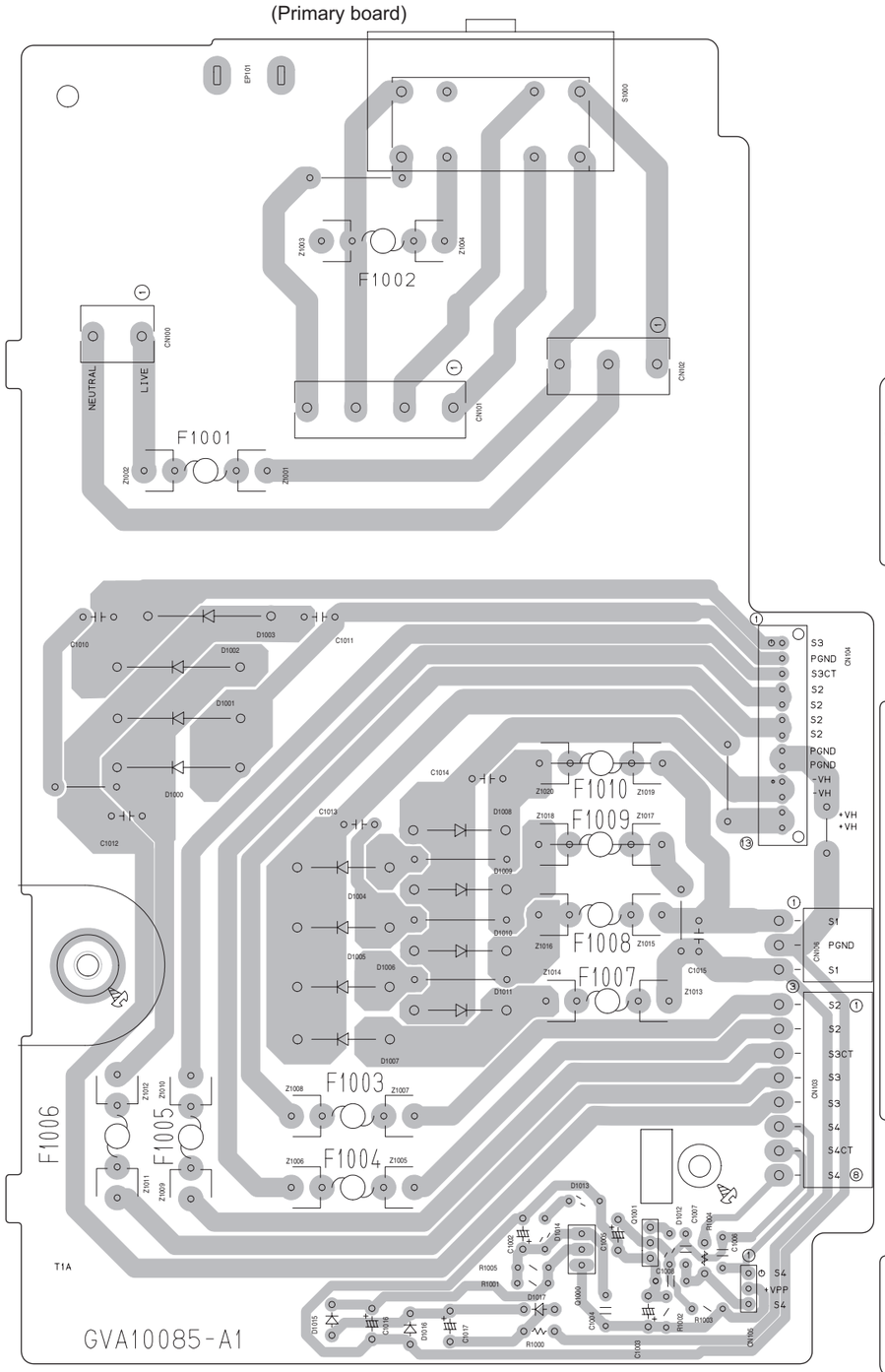

(Video board)

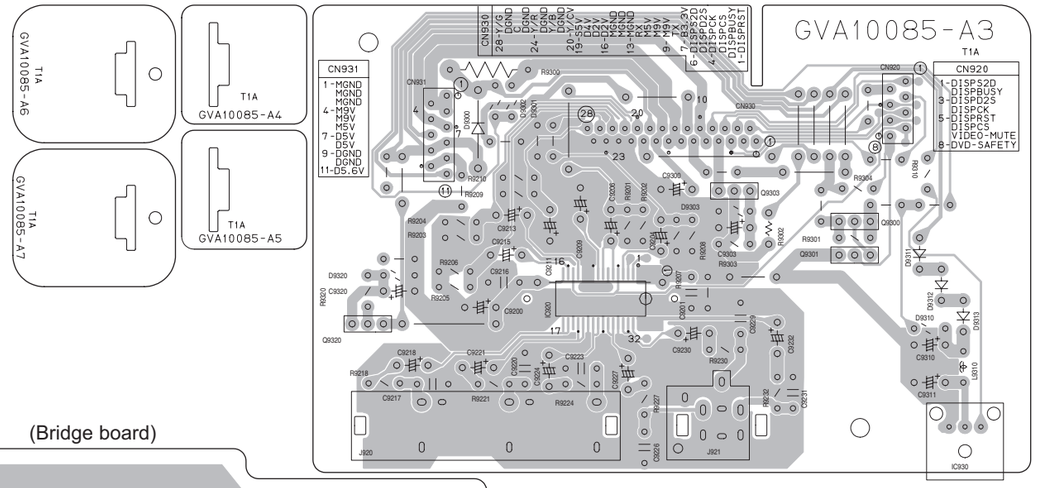

(Bridge board)

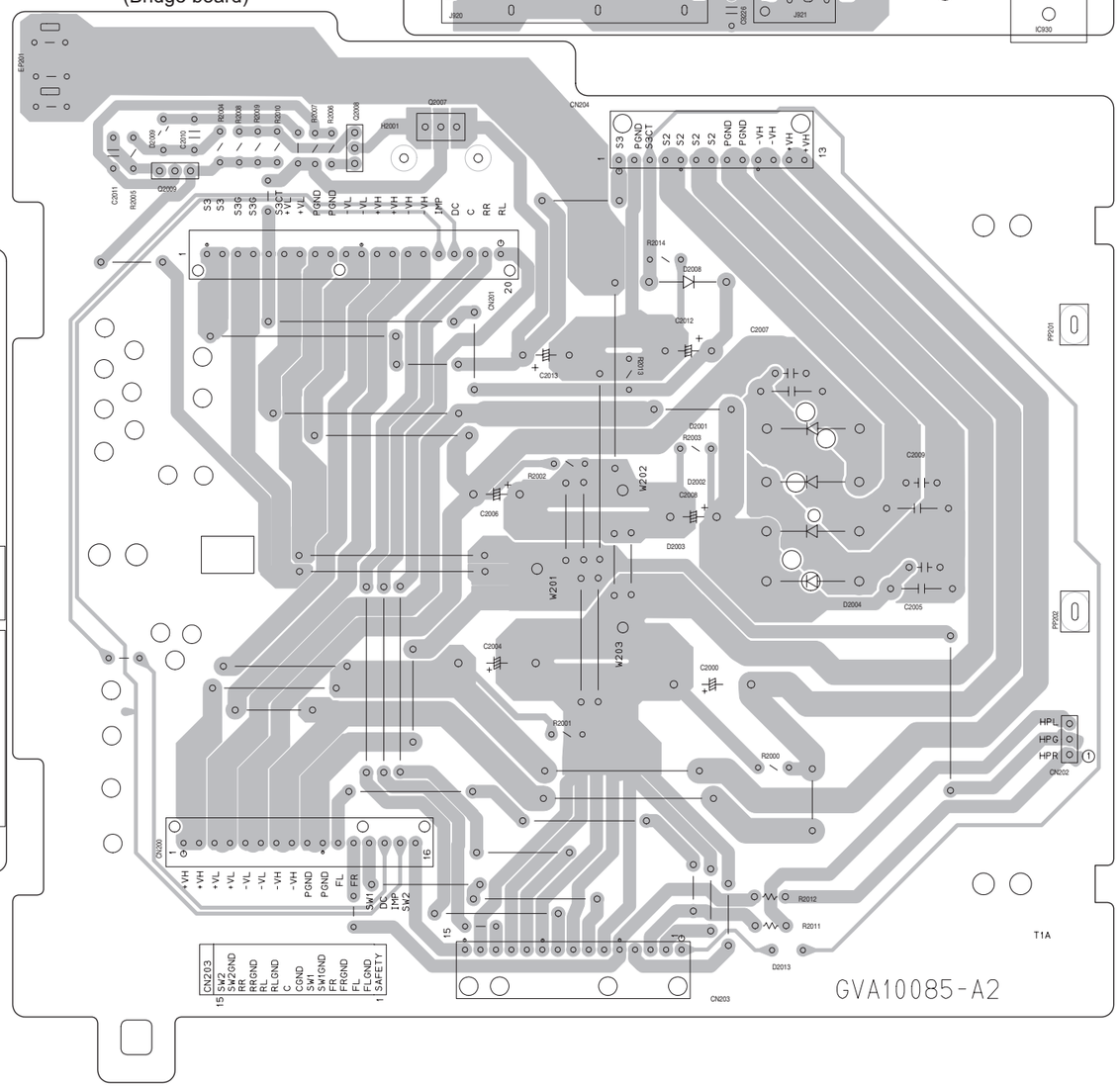

■ DVD servo board

Lead free solder used in the board (material : Sn-Ag-Cu, melting point : 219 Centigrade)

Forward side

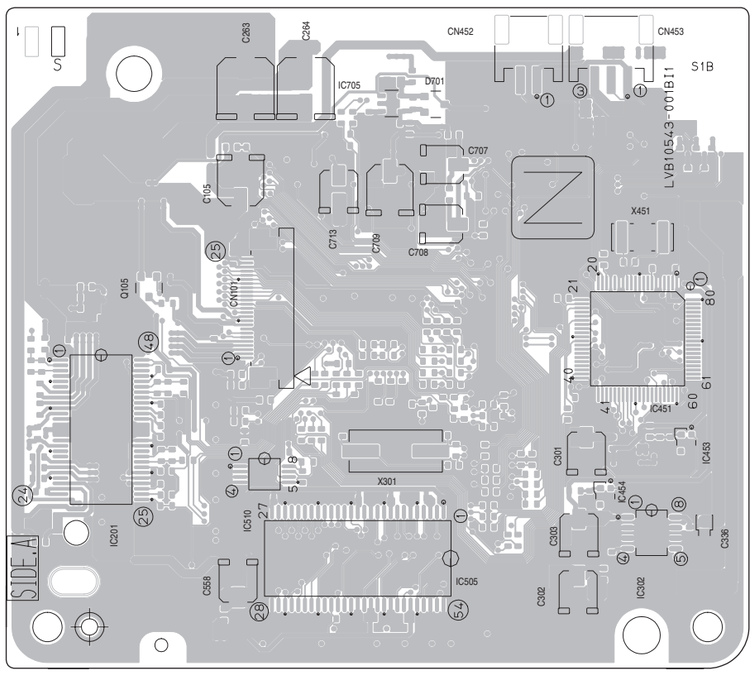

Reverse side

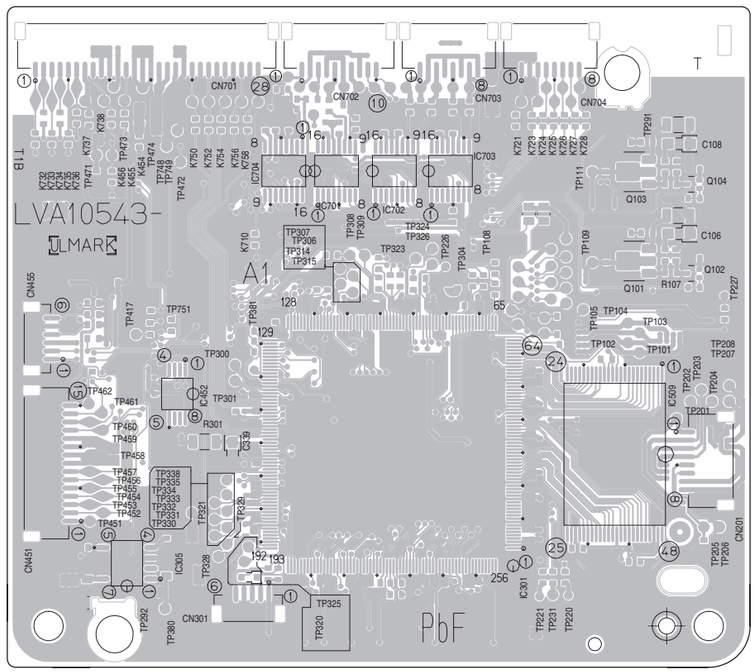

■ Loading board

Lead free solder used in the board (material : Sn-Ag-Cu, melting point : 219 Centigrade)

(Motor board)

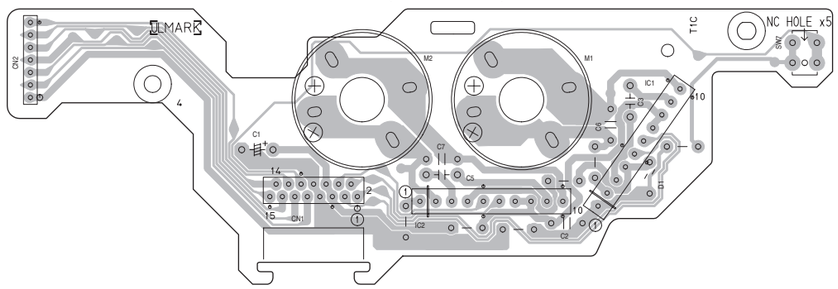

(Tray switch board)

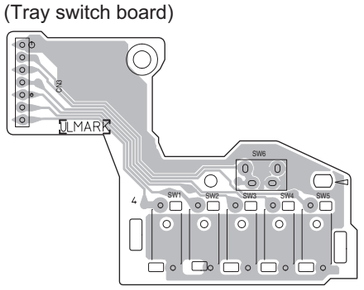

(Switch board)

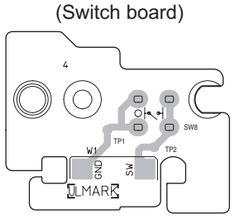

(Sensor board)

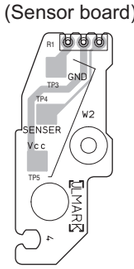

■ Cassette switch board (For A cassette)

Lead free solder used in the board (material : Sn-Ag-Cu, melting point : 219 Centigrade)

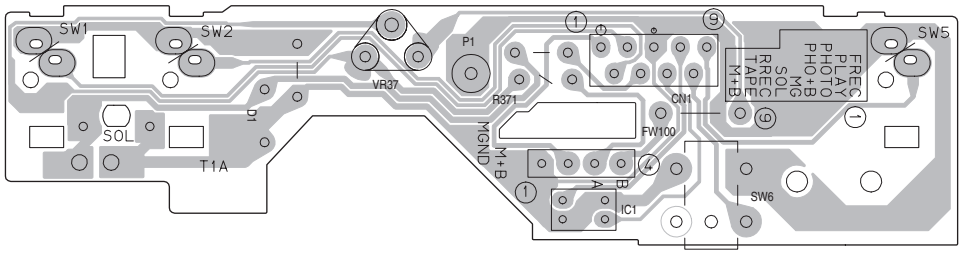

■ Head amplifier board (For A cassette)

Lead free solder used in the board (material : Sn-Ag-Cu, melting point : 219 Centigrade)

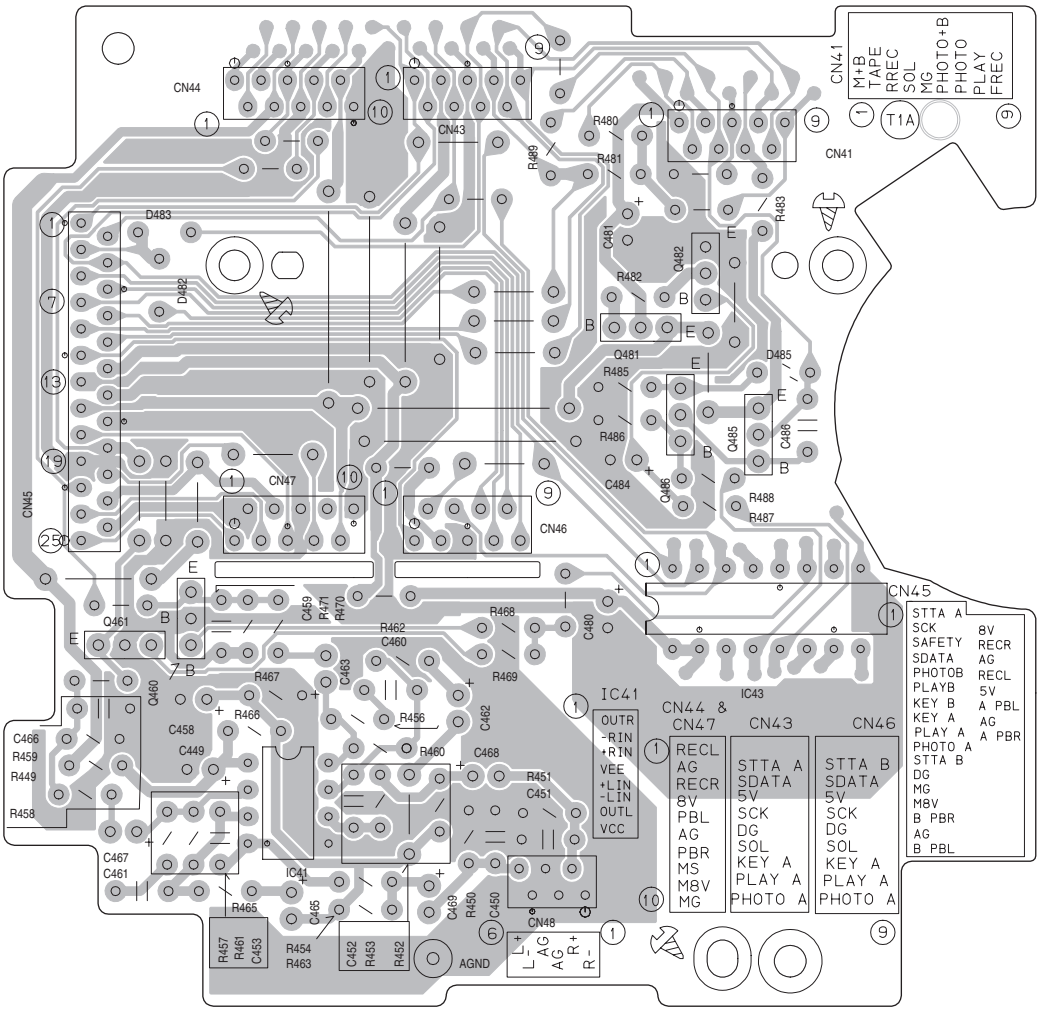

■ Cassette switch board (For B cassette)

Lead free solder used in the board (material : Sn-Ag-Cu, melting point : 219 Centigrade)

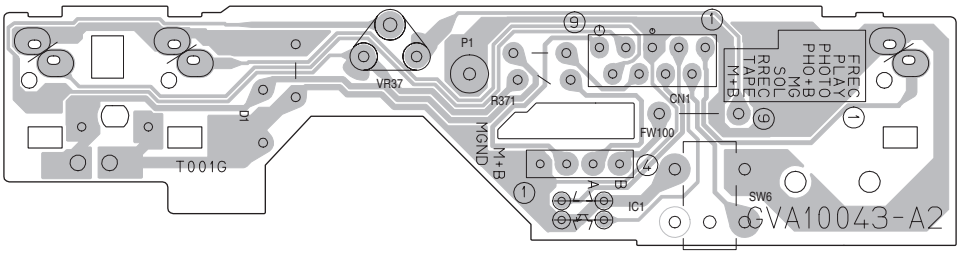

■ Head amplifier board (For B cassette)

Lead free solder used in the board (material : Sn-Ag-Cu, melting point : 219 Centigrade)

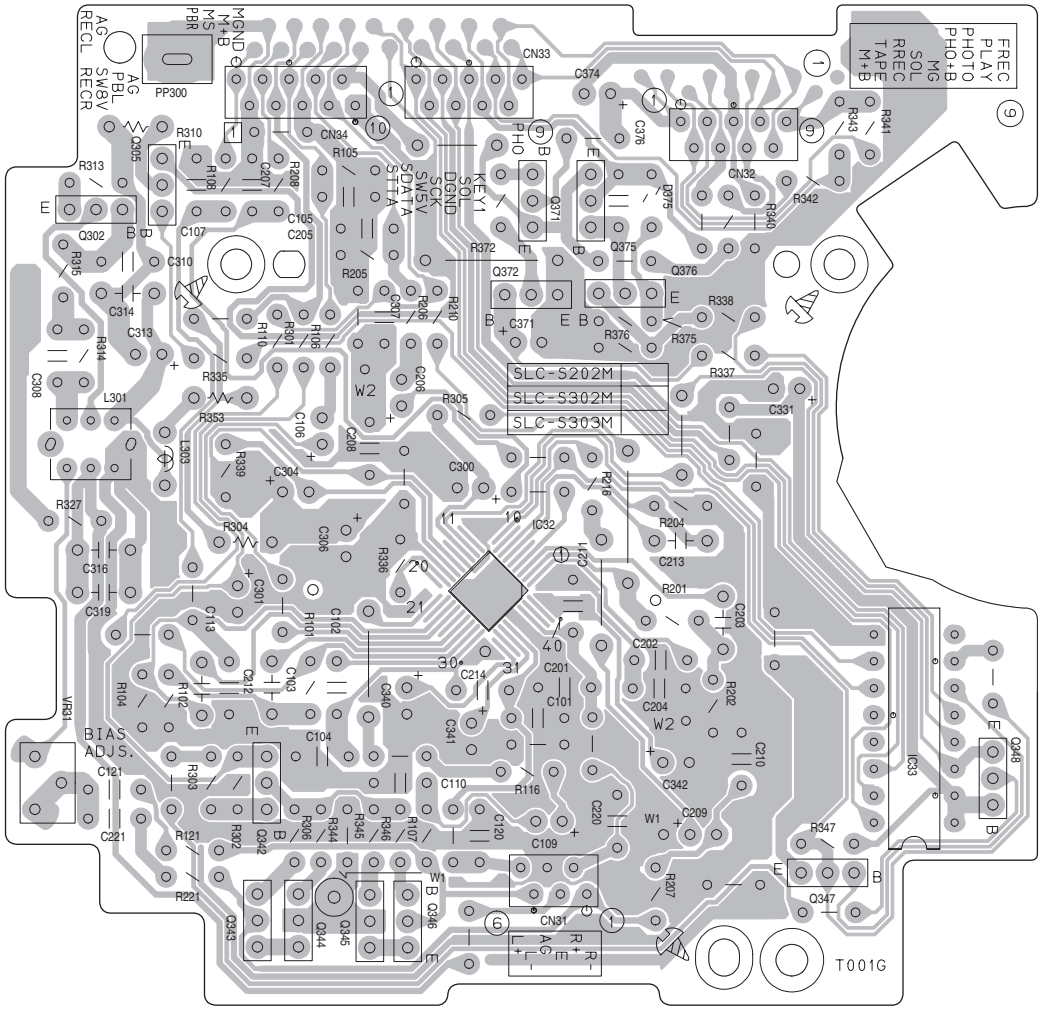

< MEMO >

JVC
Victor Company of Japan, Limited
AV & MULTIMEDIA COMPANY AUDIO/VIDEO SYSTEMS CATEGORY 10-1,1chome,Ohwatari-machi,Maebashi-city,371-8543,Japan

(No.MB368SCH)

Printed in Japan
VPT