HX – 5 B/E/G/GI/EN/VX

JVC

SERVICE MANUAL

CARRYABLE COMPONENT SYSTEM

HX-5 B/E/G/GI/EN/VX

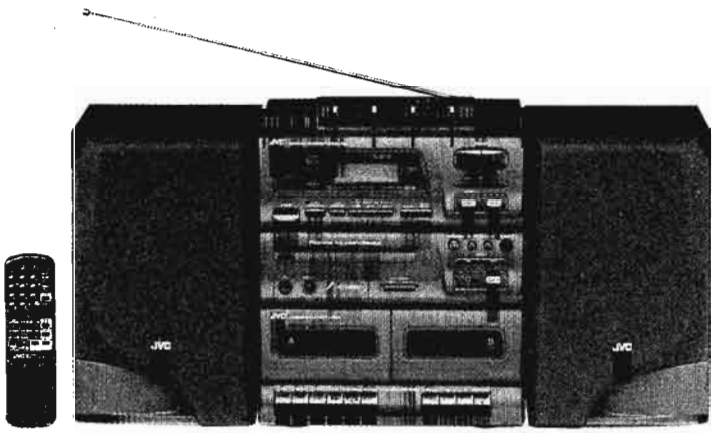

COMPACT disc DIGITAL AUDIO

Area Suffix

B	U.K.
E	Continental Europe
G	Germany
GI	Italy
EN	North Europe
VX	Eastern Europe

Contents

1. Safety Precautions ..... Page 2
2. Safety Precaution about HX – 5 3
3. Instructions 5
4. Location of Main Parts 33
5. Removal of Main Parts 35
6. Main Adjustment 44
7. Troubleshooting 50
8. Analytic Drawing and Parts List 56
9. Wiring Connections 62
10. Block Diagram 63
11. Standard Schematic Diagram 70
12. Location of P.C. Board Parts 77
13. Electrical Parts List 82
14. Illustration of Packing and Parts List 96

No. 1923

March 1995

1. Safety Precautions

1. The design this product contains special hardware and many circuits and components specially for safety purposes. For continued protection, no changes should be made to the original design unless authorized in writing by the manufacturer. Replacement parts must be identical to those used in the original circuits. Services should be performed by qualified personnel only.
2. Alterations of the design or circuitry of the product should not be made. Any design alterations of the product should not be made. Any design alterations or additions will void the manufacture's warranty and will further relieve the manufacture of responsibility for personal injury or property damage resulting therefrom.
3. Many electrical and mechanical parts in the product have special safety related characteristics. These characteristics are often not evident from visual inspection nor can the protection afforded by them necessarily be obtained by using replacement components rated for higher voltage, wattage, etc. Replacement parts which have these special safety characteristics are identified in the Parts List of Service Manual. Electrical components having such features are identified by shading on the schematic and by (⚠) on the Parts List in the Service Manual. The use of a substitute replacement which does not have the same safety characteristics as the recommended replacement parts shown in the Parts List of Service Manual may create shock, fire, or other hazards.
4. The leads in the products are routed and dressed with ties, clamps , tubings, barriers and the like to be separated from live parts, high temperature parts, moving parts and or sharp edges for the prevention of electric shock and fire hazard. When service is required, the original lead routing and dress should be observed, and it should be confirmed that they have been returned to normal, after reassembling.
5. Leakage current check (Electrical shock hazard testing)

   After reassembling the product, always perform an isolation check on the exposed metal parts of the product (antenna terminals, knobs, metal cabinet, screw heads, headphone jack, control shafts, etc.) to be sure the product is safe to operate without danger of electrical shock. Do not use a line isolation transformer during this check.

   • Plug the AC line cord directly into the AC outlet. Using a"Leakage Current Tester", measure the leakage current from each exposed metal parts of the cabinet, particularly any exposed metal part having a return path to the chassis, to a known good earth ground. Any leakage current must not exposeed 0.5mA AC(r.m.s.)

   • Alternate check method

   Plug the AC line cord directly into the AC outlet. Use an AC voltmeter having 1,000 ohms per volt or more sensitivity in the following manner. Connect a 1,500 ohms 10W resistor paralleled by a 0.15 μ F AC type capacitor between an exposed metal part and a known good earth ground. Measure the AC voltage across the resistor with the AC voltmeter. Move the resistor connection to each exposed metal part, particularly any exposed metal part having a return path to the chassis, and measure the AC voltage across the resistor. Now, reverse the plug in the AC outlet and repeat each measurement. Any voltage measured must not exceed 0.75V AC(r.m.s.). This corresponds to 0.5mA AC(r.m.s.).

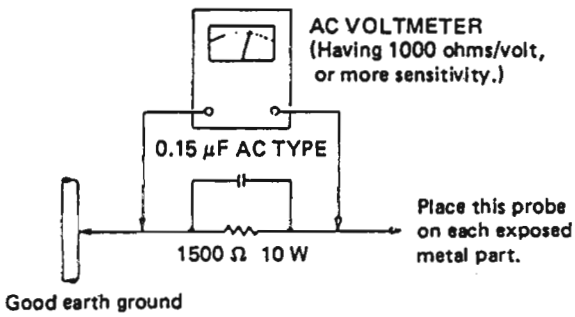

Warning

1. This equipment has been designed and manufactured to meet international safety standards.
2. It is the legal responsibility of the repairer to ensure that these safety standards are maintained.
3. Repairs must be made in accordance with the relevant safety standards.
4. It is essential that safety critical components are replaced by approved parts.
5. If mains voltage selector is provided, check setting for local voltage.

2. Safety Precaution about HX-5

IMPORTANT FOR LASER PRODUCTS

PRECAUTIONS

1. CLASS 1 LASER PRODUCT
2. **DANGER:** Invisible laser radiation when open and interlock failed or defeated. Avoid direct exposure to beam.
3. **CAUTION:** Do not open the rear cover. There are no user serviceable parts inside the unit; leave all servicing to qualified service personnel.
4. **CAUTION:** The compact disc player uses invisible laser radiation and is equipped with safety switches which prevent the emission of radiation when the CD holder is open. It is dangerous to defeat the safety switches.
5. **CAUTION:** Use of controls for adjustments and the performance of procedures other than those specified herein may result in exposure to hazardous radiation.
6. **CAUTION:** The laser is able to function, if safety switches out of function. The laser light is invisible, avoid exposure, do not disassemble the laser unit, but replace the complete unit.

REPRODUCTION OF LABELS AND THEIR LOCATION

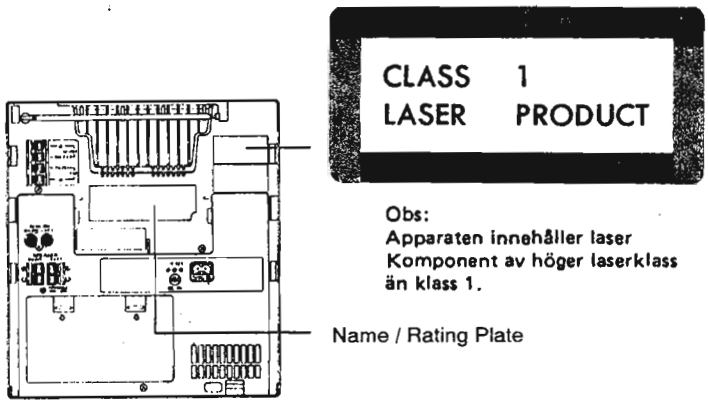

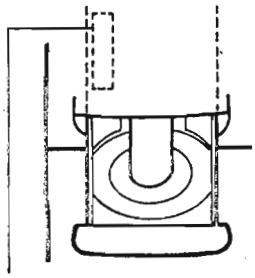

DANGER: Invisible laser radiation when open and interlock failed or defeated. AVOID DIRECT EXPOSURE TO BEAM. (e)	ADVARSEL: Usynlig laserstråling ved åbning, når sikkerhedsafbrydere er ude af funktion. Undgå udsættelse for stråling. (d)	VARNING: Osynlig laserstrålning när denna del är öppnad och spärren är urkopplad. Betrakta ej strålen. (s)	VARO: Avattaessa ja suojalukitus ohitettaessa olet alttiina näkymättömälle lasersäteilylle. Älä katso säteeseen. (f)

IMPORTANT (In the United Kingdom)

Mains Supply (AC 230 V~, 50 Hz only)

DO NOT cut off the mains plug from this equipment. If the plug fitted is not suitable for the power points in your home or the cable is too short to reach a power point, then obtain an appropriate safety approved extension lead or consult your dealer.

BE SURE to replace the fuse only with an identical approved type, as originally fitted, and to replace the fuse cover.

If nonetheless the mains plug is cut off ensure to remove the fuse and dispose of the plug immediately, to avoid a possible shock hazard by inadvertent connection to the mains supply.

IMPORTANT

DO NOT make any connection to the terminal which is marked with the letter E or by the safety earth symbol or coloured green or green-and-yellow.

The wires in the mains lead on this product are coloured in accordance with the following code:

Blue to N (Neutral) or Black
Brown to L (Live) or Red

As these colours may not correspond with the coloured markings identifying the terminals in your plug proceed as follows:

The wire which is coloured blue must be connected to the terminal which is marked with the letter N or coloured black.

The wire which is coloured brown must be connected to the terminal which is marked with the letter L or coloured red.

IF IN DOUBT – CONSULT A COMPETENT ELECTRICIAN.

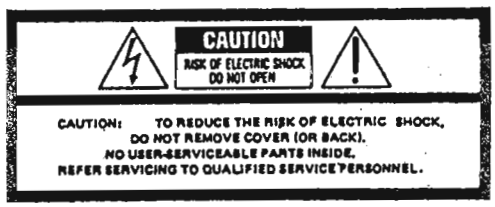

The lightning flash with arrowhead symbol, within an equilateral triangle, is intended to alert the user to the presence of uninsulated "dangerous voltage" within the product's enclosure that may be of sufficient magnitude to constitute a risk of electric shock to persons.

The exclamation point within an equilateral triangle is intended to alert the user to the presence of important operating and maintenance (servicing) instructions in the literature accompanying the appliance.

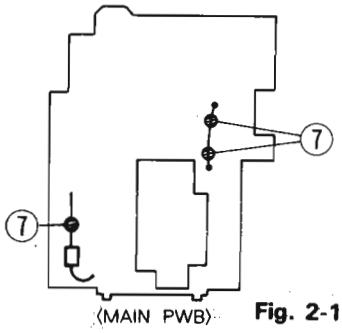

Fig. 2-1

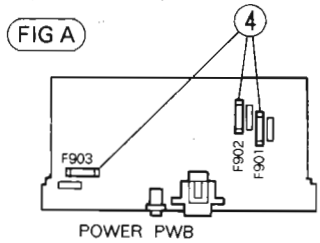

Fig. 2-2

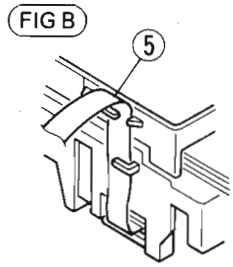

Fig. 2-3

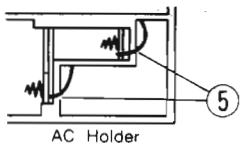

Fig. 2-4

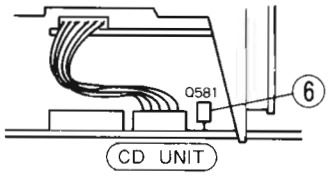

Fig. 2-5

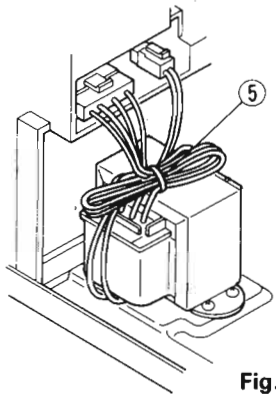

Fig. 2-6

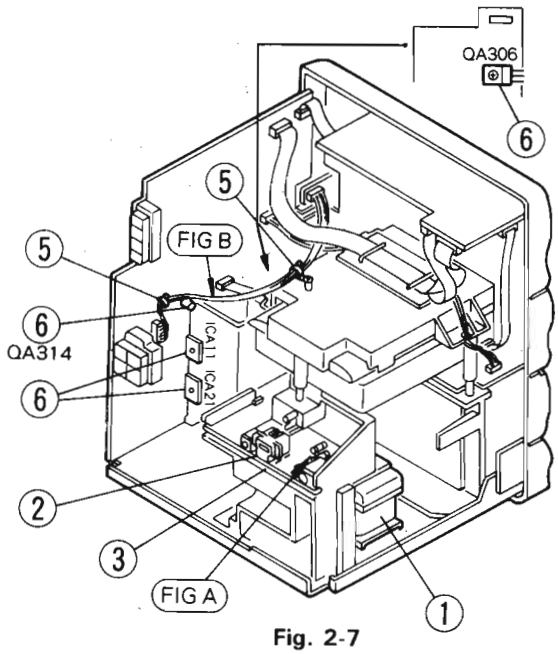

Fig. 2-7

■ Inportant management points regarding safety(Item demanding special safety precautions)

1. •Power transformer marking
   : Parts number (VTP66J2 – 12H)
   The torque of the screw driver for the power transformer must be controlled.
2. Concerning the AC socket, the next marking must be confirmed and to avoid printed circuit board pattern damage, the AC socket must not float from printed circuit board.
   Marking ; HSC1466
3. Concerning the primary terminal and the adjacent secondary terminal on the printed circuit board to provide proper creeping and spatial distance, solder must not protrude from soldering round.
4. Before installation confirm the fuse capacity indication.( ), or ( ) marks on the holder.

REF.No.	Capacity & mark	Indication on PCB
F901	T500mA	T500mA
F902	T5A	T5A
F903	T5A	T5A

5. Wires must be clamped or secured at the locations shown in the figure so that the wire do not touch to live parts moving part, hot part, or sharp edges.
6. Following parts are controlled as the heated parts. confirm that the flammable parts are lifted up the parts in ( )must be controlled.
   - Diode : D901, D902, D903, D94,
   - IC : (ICA11),(ICA21)
   - Transistor : (Q581), (QA314),(QA306)
7. The single wire on the printed circuit board must be fixded with spacer or bond.

3. Instructions

JVC

INSTRUCTIONS

HX-5 E/GI

CARRYABLE COMPONENT SYSTEM

INSTRUCCIONES: SISTEMA PORTATIL DE COMPONENTES

MANUALE DI ISTRUZIONI: SISTEMA PORTATILE A COMPONENTI

COMPACT disc DIGITAL AUDIO

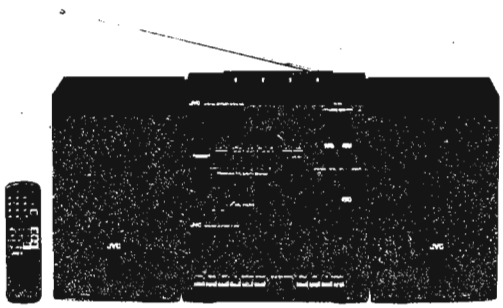

Thank you for purchasing this JVC product. Please read these instructions carefully before starting operation to be sure to obtain optimum performance and a longer service life from the unit.

Enhorabuena por la compra de este producto JVC. Lea detenidamente este manual de instrucciones antes de poner en funcionamiento la unidad a fin de obtener un óptimo rendimiento y mayor vida útil.

Grazie per avere acquistato questo prodotto JVC. Si prega di leggere queste istruzioni con attenzione prima dell'uso per essere certi di ottenere prestazioni ottimali ed una lunga durata dell'unità.

CONTENTS

Features 2
Safety precautions 3
Handling precautions 5
Attaching/detaching the speakers 6
Connections 7
Power supply 10
Names of parts and their functions 13
Remote control unit 18
Switching the power on/off 20
Volume, tone and other controls 23
Concerning compact discs 25
Playing compact discs 26
Cassette tape 32
Cassette playback 33
Relay playback 34
Radio reception 35
Recording 39
Dubbing (synchro start dubbing) 41
Microphone mixing 43
Clock/timer adjustment 44
Timer operations 47
Sleep operations 50
Maintenance 52
Troubleshooting 53
Specifications 54

WARNING:
TO REDUCE THE RISK OF FIRE OR ELECTRIC SHOCK, DO NOT EXPOSE THIS APPLIANCE TO RAIN OR MOISTURE.

INDICE

Características 2
Precauciones de seguridad 3
Precauciones de manipulación 5
Fijación/retiro de altavoces 6
Conexiones 7
Alimentación 10
Nombre de las partes y sus funciones 13
Unidad de control remoto 18
Conexión/desconexión de la alimentación 20
Volumen, tono y otros controles 23
En cuanto a los compact disc 25
Reproducción de compact discs 26
Cassette 32
Reproducción de cassettes 33
Reproducción por relevo 34
Radiorrecepción 35
Grabación 39
Copia (copia con comienzo sincronizado) 41
Mezclado de micrófono 43
Ajuste del reloj/temporizador 44
Funcionamiento del temporizador 47
Funcionamiento del temporizador de desconexión 50
Mantenimiento 52
Detección de problemas 53
Especificaciones 54

ADVERTENCIA:
PARA EVITAR RIESGOS DE INCENDIOS O ELECTROCUCIONES, NO EXPONGA ESTE APARATO A LA LLUVIA O A LA HUMEDAD.

INDICE

Caratteristiche 2
Precauzioni per la sicurezza 3
Precauzioni per l'uso 5
Applicazione/rimozione dei diffusori 6
Collegamenti 7
Alimentazione 10
Nomi e funzioni delle parti 13
Unità di telecomando 18
Accensione e spegnimento 20
Volume, tono ed altri comandi 23
Informazioni sui CD 25
Riproduzione di CD 26
Nastri a cassetta 32
Riproduzione di cassette 33
Riproduzione alternata 34
Ricezione con la radio 35
Registrazione 39
Duplicazione (duplicazione sincronizzata) 41
Missaggio microfono 43
Regolazione dell'orologio e del timer 44
Operazioni col timer 47
Spegnimento a tempo 50
Manutenzione 52
Diagnostica 53
Dati tecnici 54

AVVERTENZA:
NON ESPORRE L'APPARECCHIO A PIOGGIA O UMIDITA' ONDE RIDURRE I RISCHI DI FIAMME O SCOSSE ELETTRICHE.

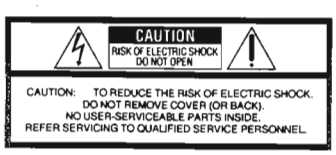

The lightning flash with arrowhead symbol, within an equilateral triangle, is intended to alert the user to the presence of uninsulated "dangerous voltage" within the product's enclosure that may be of sufficient magnitude to constitute a risk of electric shock to persons.

The exclamation point within an equilateral triangle is intended to alert the user to the presence of important operating and maintenance (servicing) instructions in the literature accompanying the appliance.

IMPORTANT FOR LASER PRODUCTS

PRECAUTIONS

1. CLASS 1 LASER PRODUCT
2. **DANGER:** Invisible laser radiation when open and interlock failed or defeated. Avoid direct exposure to beam.
3. **CAUTION:** Do not open the rear cover. There are no user serviceable parts inside the unit; leave all servicing to qualified service personnel.
4. **CAUTION:** The compact disc player uses invisible laser radiation and is equipped with safety switches which prevent the emission of radiation when the CD tray is open. It is dangerous to defeat the safety switches.
5. **CAUTION:** Use of controls for adjustments and the performance of procedures other than those specified herein may result in exposure to hazardous radiation.

IMPORTANTE PARA PRODUCTOS LASER

PRECAUCIONES

1. PRODUCTO LASER CLASE 1
2. **PELIGRO:** Radiación láser invisible cuando se abre, falla o se anula el seguro. Evite la exposición directa al rayo.
3. **ATENCION:** No abra la tapa posterior. No hay piezas reparables por el usuario dentro de la unidad; acuda a técnicos calificados para la reparación.
4. **ATENCION:** El reproductor de compact disc emplea radiación láser invisible y cuenta con interruptores de seguridad que previenen la emisión de radiación cuando se abre la portadisco del CD. Es peligroso anular estos interruptores.
5. **ATENCION:** El empleo de controles para ajustes y la ejecución de procedimientos diferentes a los especificados aquí puede causar una exposición peligrosa a la radiación.

IMPORTANTI PRECAUZIONI PER PRODOTTI LASER

PRECAUZIONI

1. *PRODOTTO LASER DI CLASSE 1*
2. **PERICOLO:** *Quando l'apparecchio è aperto ed i dispositivi di sicurezza non funzionano o sono stati disattivati, vengono prodotte invisibili radiazioni laser. Evitare l'esposizione diretta al raggio.*
3. **CAUTELA:** *Non aprire la copertura posteriore. All'interno dell'unità non vi sono parti che possono interessare l'utente; fare eseguire qualsiasi intervento a personale di assistenza qualificato.*
4. **CAUTELA:** *Il lettore di CD utilizza invisibili radiazioni laser ed è fornito di interruttori di sicurezza che interrompono l'emissione di radiazioni quando il piatto del CD è aperto. E' pericoloso disattivare questi interruttori.*
5. **CAUTELA:** *L'uso di comandi e procedure diversi da quanto specificato possono risultare nell'esposizione a radiazioni pericolose.*

REPRODUCTION OF LABELS AND THEIR LOCATION

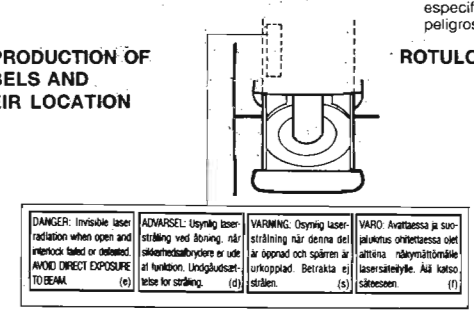

ROTULOS Y SU UBICACION

ETICHETTE E LORO POSIZIONE

FEATURES

1. **Carryable component system consisting of 3 units**
2. **One-touch operation (COMPU PLAY) (only when AC power is used)**
   - When a source button (CD, tape, tuner or AUX) is pressed, the unit's power is turned ON and initiates playback, even when the power is set to STANDBY. (IllumiMagic COMPU PLAY is activated for the ▷II, BAND, AUX buttons.)
3. **33-key remote control unit (CD, tuner and AUX operations)**
4. **Multi-function CD player**
   - Programmed play/repeat play/random play.
5. **Double-cassette mechanism (Deck A for recording and playback, Deck B for playback)**
   - Metal (type IV) and CrO_2 (type II) tape can be played back for superior tone quality.
   - CrO_2 (type II) tape recording capability.
   - Synchro start dubbing function (normal speed dubbing).
6. **2-Band digital synthesizer tuner with 30-station (15 FM and 15 AM (MW/LW)) preset capability**
   - Seek/Manual tuning.
   - Auto preset tuning.
7. **Active Hyper-Bass circuit for low-frequency sound reproduction**
8. **Preset equalizer modes and LIVE SURROUND mode**
9. **Timer/Clock function**
   - Timer on/off with preset volume function.
   - Sleep timer can be preset for up to 120 minutes.
10. **Microphone mixing facility**

CARACTERISTICAS

1. **Sistema portátil de componentes consistente de 3 unidades**
2. **Operación de un solo toque (COMPU PLAY) (solo cuando se usa CA)**
   - Cuando se presiona un botón de fuente (CD, cinta, sintonizador o AUX), se conecta ON la alimentación de la unidad y se inicia la reproducción aun cuando la alimentación sea colocada en STANDBY. (IllumiMagic COMPU PLAY se activa para los botones ▷II, BAND y AUX).
3. **Unidad de control remoto con 33 teclas (operación de CD, sintonizador y AUX)**
4. **Reproductor de CD con funciones múltiples**
   - Reproducción/repetición de reproducción/reproducción aleatoria automáticos.
5. **Mecanismo de doble cassette (platina A para grabación y reproducción, platina B para reproducción)**
   - Las cintas de metal (tipo IV) y de CrO_2 (tipo II) pueden ser reproducidas para obtener sonido de calidad superior.
   - Capacidad para grabar con cinta de CrO_2 (tipo II).
   - Función de copia con inicio sincronizado (copia a velocidad normal).
6. **Sintonizador sintetizador digital de 2 bandas con capacidad para programación de 30 estaciones (15 de FM y 15 AM (OM/OL))**
   - Búsqueda/sintonización manual.
   - Sintonización programada.
7. **Circuito de hiper graves activo para reproducción de sonidos de baja frecuencia**
8. **Modos de ecualización preajustados y modo LIVE SURROUND**
9. **Función de temporización/reloj**
   - Función de activación/desactivación del temporizador con volumen preajustado.
   - El temporizador despertador puede ser programado hasta un máximo de 120 minutos.
10. **Facilidad para mezcla de micrófono**

CARATTERISTICHE

1. **Sistema portatile a componenti consistente di 3 unità.**
2. **Operazioni ad un tocco (COMPU PLAY) (solo quando viene utilizzata l'alimentazione CA)**
   - *Quando un tasto per la selezione della fonte (CD, registratore, sintonizzatore o AUX) viene premuto, l'alimentazione viene attivata e l'unità inizia la riproduzione anche quando l'alimentazione si trova su STANDBY. (Il modo IllumiMagic COMPU PLAY viene attivato con i tasti ▷II, BAND, AUX).*
3. **Unità di telecomando a 33 tasti (funzionamento CD, sintonizzatore ed AUX)**
4. **Lettore CD multifunzione**
   - *Riproduzione programmata/ripetuta/casuale.*
5. **Meccanismo a doppia cassetta (piastra A per registrazione e riproduzione, piastra B per riproduzione)**
   - *Per una maggiore qualità dei toni è possibile riprodurre nastri Metal (tipo IV) e CrO_2 (tipo II).*
   - *Capacità di registrazione su nastri CrO_2 (tipo II).*
   - *Funzione di duplicazione con avvio sincronizzato (duplicazione a velocità normale.*
6. **Sintonizzatore a sintetizzazione digitale a 2 bande con capacità di preselezione di 30 stazioni (15 FM e 15 AM (MW/LW))**
   - *Sintonizzazione con ricerca/manuale.*
   - *Sintonizzazione automatica preselezioni.*
7. **Circuito Active Hyper-Bass per la riproduzione di suoni a bassa frequenza**
8. **Modi equalizzatore preselezionati e modo LIVE SURROUND**
9. **Funzione timer/orologio**
   - *Funzione di accensione/spegnimento col timer con preimpostazione del volume.*
   - *Il timer per lo spegnimento a tempo può essere preimpostato fino a 120 minuti.*
10. **Capacità di missaggio microfono**

2

SAFETY PRECAUTIONS

Prevention of Electric Shocks, Fire Hazards and Damage

1. Even when the POWER button is set to STANDBY, a very small current will flow. To save power and for safety when not using the unit for an extended period of time, disconnect the power cord from the household AC outlet.
2. Do not handle the power cord with wet hands.
3. When unplugging from the wall outlet, always grasp and pull the plug, not the power cord.

PRECAUCIONES DE SEGURIDAD

Prevención contra electrochoques, riesgos de incendios y daños.

1. Aunque el botón POWER esté ajustado en STANDBY, circula una pequeña cantidad de corriente. Para ahorrar energía y por seguridad, desconecte el cable de alimentación del tomacorriente cuando no vaya a utilizar la unidad por mucho tiempo.
2. No toque el cable de alimentación con las manos húmedas.
3. Al desenchufar el cable del tomacorriente, tire de la clavija y no del cable.

PRECAUZIONI PER LA SICUREZZA

Prevenzione di scosse elettriche, fiamme e danni

1. *Anche quando l'interruttore POWER si trova sulla posizione STANDBY, una piccola quantità di corrente continua a fluire. Per risparmiare energia e per ragioni di sicurezza, scollegare il cavo dell'alimentazione dalla presa di corrente CA quando si prevede di non utilizzare l'unità per un periodo prolungato.*
2. *Non maneggiare il cavo di alimentazione con le mani bagnate.*
3. *Per scollegarsi dalla presa di rete, afferrare sempre la spina e non il cavo dell'alimentazione.*

3

4. Consult your nearest dealer when damage, disconnection, or contact failure is found with the cord.
5. Do not bend the cord sharply, or pull or twist it.
6. Do not modify the power cord in any manner.
7. Do not remove screws to disassemble the unit and do not touch anything inside the unit to avoid accidents.
8. Do not insert any metallic objects into the unit.
9. Unplug the power cord when there is a possibility of lightning.
10. If water gets inside the unit, unplug the power cord from the outlet and consult your dealer.
11. Do not block the ventilation holes of the unit so that heat can escape.
    Do not install the unit in a badly ventilated place.
12. Never place heavy objects on this unit.
13. Since the HX-5 uses a motor-driven CD tray, make sure your hand or other object does not obstruct tray movement.
14. Since the speaker sections of this unit are detachable, be sure that each speaker is firmly connected to the main unit when carrying the unit and avoid dropping or striking it, and other forms of impact.

Power button
When the power cord is plugged into an AC outlet, the power indicator is lit red, indicating STANDBY mode (this indicator does not light when DC power is supplied). When the power is switched on, the power indicator goes out.

When this unit is plugged into an AC outlet, it consumes a small current to operate the remote control and timer, or to back up the memory of the microprocessor, even when the POWER button is set to STANDBY.

4. Consulte a su vendedor más cercano cuando descubra una falla, desconexión o falta de contacto en el cable.
5. No doble, tire o enrosque demasiado el cable.
6. No efectúe ninguna modificación en el cable.
7. No saque los tornillos para desarmar la unidad ni toque nada dentro de la misma para evitar accidentes.
8. No introduzca ningún objeto metálico dentro de la unidad.
9. Desenchufe el cable lo antes posible si hay posibilidad de tormentas eléctricas.
10. Si entrara agua dentro de la unidad, desenchufe el cable del tomacorriente y consulte a su vendedor.
11. No bloquee los orificios de ventilación de la unidad para que el calor pueda salir.
    No instale la unidad en un lugar mal ventilado.
12. Nunca coloque objetos pesados sobre esta unidad.
13. Como el HX-5 utiliza un portadiscos de CD accionada por motor, asegúrese de no obstruir con su mano o con un objeto el movimiento del mismo.
14. Como las secciones de los altavoces de esta unidad son extraíbles, asegúrese de que cada componente esté firmemente conectado cuando transporte la unidad, y evite dejarla caer, golpearla y otras formas de impactos.

Botón de alimentación
Cuando se conecta el cable de alimentación en un tomacorriente de alterna, se enciende el indicador de alimentación en rojo indicando el modo STANDBY (este indicador no se enciende cuando se suministra corriente continua). Cuando se conecta la alimentación, el indicador de alimentación se apaga.

Cuando esta unidad está conectada a un tomacorrientes de CA, consume una pequeña cantidad de corriente para operar el control remoto y el temporizador, y para la memoria de apoyo del microprocesador, aún cuando el botón POWER esté colocado en STANDBY.

4. Consultare il rivenditore più vicino quando si riscontrano danni, scollegamenti o contatti scadenti nel cavo di alimentazione.
5. Non piegare eccessivamente il cavo e non tirarlo o torcerlo.
6. Non modificare il cavo di alimentazione in alcun modo.
7. Onde evitare incidenti, non rimuovere alcuna vite per smontare l'unità e non toccare nulla all'interno.
8. Non inserire alcun oggetto metallico nell'unità.
9. Scollegare il cavo di alimentazione durante temporali con fulmini.
10. Se dell'acqua dovesse penetrare all'interno dell'unità, scollegare il cavo dell'alimentazione dalla presa di rete e consultare il proprio rivenditore.
11. Non bloccare i fori di ventilazione dell'unità in modo che il calore possa essere dissipato.
Non installare l'unità in un luogo con ventilazione scadente.
12. Non appoggiare mai oggetti pesanti su questa unità.
13. Dato che il HX-5 utilizza un piatto del CD motorizzato, accertarsi di non ostruirne il movimento con le mani o oggetti vari.
14. Dato che i diffusori di questa unità possono essere rimossi, accertarsi che essi siano applicati correttamente quando si trasporta l'unità per evitare che cadano o che vengano urtati in qualsiasi modo.

Interruttore alimentazione
Quando il cavo di alimentazione è collegato ad una presa di rete CA, l'indicatore di accensione si illumina in rosso per indicare il modo di STANDBY (questo indicatore non si illumina quando viene fornita alimentazione in CC). Quando l'alimentazione viene attivata, l'indicatore dell'alimentazione si spegne.

Quando questa unità è collegata ad una presa di rete CA, essa consuma una piccola quantità di corrente per il funzionamento del telecomando e del timer o per il mantenimento della memoria del microprocessore anche quando il tasto POWER è impostato su STANDBY.

HANDLING PRECAUTIONS

Do not use this unit in direct sunlight or leave the unit in closed automobiles (or yachts, etc.) where it would be exposed to high temperatures above 40°C (104°F).

1. **Avoid installing in the following places**
   - Where it could be subject to vibrations.
   - Where it is excessively humid, such as in a bathroom.
   - Where it could be magnetized by a magnet or speaker.
2. **Pay attention to dust**
   Be sure to close the CD tray so the lens is not contaminated by dust.
3. **Condensation**
   In the following cases, condensation may occur on the lens, in which case the unit may not operate correctly.
   - In a room where a heater has just been switched on.
   - In a place where there is smoke or high humidity.
   - When the unit is moved directly from a cold to a warm room.

   In these cases, set the POWER button to ON and wait 1 or 2 hours before use.
4. **Volume setting**
   Compact discs produce very little noise compared with analog records. When the volume control of an amplifier is adjusted by listening to the noise as is done with analog records, the speakers could be damaged by the sudden increase of output when the music starts. Therefore, turn down the volume before starting and adjust as required while playing a CD.
5. **Safety mechanism**
   This unit incorporates a safety interlock mechanism which switches the laser beam on and off, so that when the disc tray is open, the laser beam stops automatically.
6. **Do not place cassette tapes, etc. near the speakers**
   Since there are magnets in the speakers, do not place tapes or magnetic cards on them as recorded data could be erased.

PRECAUCIONES DE MANIPULACION

No utilice esta unidad a la luz directa del sol ni la deje en un automóvil cerrado (yate, etc.) donde podría estar expuesta a temperaturas superiores a 40°C.

1. **Evite instalarla en los siguientes lugares**
   - Donde podría estar sometida a vibraciones.
   - Donde haya mucha humedad, tal como en un cuarto de baño.
   - Donde podría ser magnetizada por un imán o altavoz.
2. **Preste atención al polvo**
   Asegúrese de cerrar el portadisco de CD para que no se ensucie la lente.
3. **Condensación**
   En los siguientes casos, puede producirse condensación en la lente y en consecuencia la unidad no funcionará correctamente.
   - En una habitación donde se haya encendido un calefactor.
   - En un lugar con humo o muy húmedo.
   - Cuando la unidad haya sido trasladada directamente de un sitio frío a otro de mayor temperatura.

   En estos casos, coloque el botón POWER en ON y espere 1 ó 2 horas antes de utilizar la unidad.
4. **Regulación del volumen**
   Los compact disc producen muy poco ruido comparados con los discos analógicos. Cuando se ajusta el control de volumen de un amplificador escuchando el ruido, como en el caso de los discos analógicos, los altavoces pueden resultar dañados por un aumento súbito de la salida al comenzar la música. Por lo tanto, disminuya el volumen antes de poner en funcionamiento la unidad y regúlelo como guste mientras reproduzca el CD.
5. **Mecanismo de seguridad**
   Esta unidad cuenta con un mecanismo de seguridad que activa o desactiva el haz lasérico, de tal manera que cuando se abre el portadisco de CD, este haz se detiene automáticamente.
6. **No coloque cassettes, etc. cerca de los altavoces.**
   Puesto que los altavoces tienen imanes, no coloque cintas o tarjetas magnéticas sobre los mismos porque podrían borrarse los datos grabados

PRECAUZIONI PER L'USO

Non utilizzare questa unità nella luce solare diretta e non lasciarla in automobili chiuse (o barche, ecc.) dove possa essere esposta a temperature maggiori di 40°C.

1. **Evitare l'installazione nei luoghi seguenti**
   - *In luoghi dove l'unità può essere soggetta a vibrazioni.*
   - *In luoghi eccessivamente umidi come una stanza da bagno.*
   - *In luoghi dove l'unità può essere magnetizzata da un magnete o da un diffusore.*
2. **Fare attenzione alla polvere**
   Accertarsi di chiudere lo sportello del CD per evitare che la lente si impolveri.
3. **Condensa**
   Nei casi seguenti si potrebbe formare della condensa sull'obiettivo e l'unità potrebbe non funzionare in modo corretto.
   - *In una stanza in cui il riscaldamento è appena stato acceso.*
   - *In un luogo fumoso o con elevata umidità.*
   - *Quando l'unità viene spostata direttamente da una stanza fredda ad una calda.*

   In questi casi, impostare il tasto POWER su ON ed attendere 1 o 2 ore prima di utilizzare l'unità.
4. **Impostazione volume**
   Un CD produce molto poco rumore di fondo a paragone di un disco analogico. Quando il comando del volume di un amplificatore viene regolato basandosi sul rumore prodotto come nel caso di un disco analogico, i diffusori possono venire danneggiati dall'improvviso aumento del livello in uscita. Abbassare perciò il volume prima dell'uso e regolarlo come desiderato dopo l'inizio della musica.
5. **Meccanismo di sicurezza**
   Questa unità incorpora un meccanismo di sicurezza che attiva e disattiva il raggio laser in modo che, quando lo sportello del CD viene aperto, il raggio laser viene disattivato automaticamente.
6. **Non posare nastri a cassetta, ecc., in prossimità dei diffusori**
   Dato che i diffusori incorporano dei magneti, non posare nastri registrati o schede magnetiche su di essi in quanto i materiali registrati potrebbero venire cancellati.

7. **Keep this unit away from your TV**
When this unit is used near a TV, the TV picture could be distorted. If this happens, move this unit away from the TV. If this does not correct the situation, avoid using this unit when the TV is turned on.
8. **Cleaning the cabinet**
If the cabinet gets dirty, wipe it with a soft, dry cloth. Never use benzine or thinner as these could damage the surface finish.
9. **When listening with headphones**
- Do not listen at high volumes as it could damage your hearing.
- For safety, do not drive while listening to this unit.

7. **Mantenga esta unidad lejos del televisor**
Cuando se utiliza esta unidad cerca de un televisor, es posible que se distorsione la imagen televisiva. Si esto ocurriese, aléjela del televisor. Si esto tampoco mejora la situación, evite utilizar la unidad cuando esté encendido el televisor.
8. **Limpieza del gabinete**
Si se ensucia el gabinete, límpielo con un paño suave y seco. No utilice bencina ni diluyente ya que éstos podrían perjudicar el acabado.
9. **Cuando escuche con auriculares**
- No escuche con el volumen muy alto porque podrían dañarse sus oídos.
- Para seguridad, no escuche esta unidad mientras conduce.

7. **Tenere l'unità lontana dal televisore**
Quando questa unità viene utilizzata in prossimità di un televisore, l'immagine TV potrebbe venire distorta. Se ciò dovesse accadere, allontanare l'unità dal televisore. Se ciò non fosse sufficiente ad eliminare le interferenze, evitare di utilizzare questa unità quando il televisore è acceso.
8. **Pulizia dell'esterno dell'unità**
Se l'esterno dell'unità fosse sporco, strofinare con un panno morbido ed asciutto.
Non usare mai benzina o diluente in quanto essi possono danneggiare la finitura delle superfici.
9. **Ascolto con le cuffie**
- *Abbassare il volume in modo da non danneggiare le orecchie.*
- *Per motivi di sicurezza non guidare mentre si ascolta il suono prodotto dall'unità con le cuffie.*

ATTACHING/DETACHING THE SPEAKERS

When using the speakers attached to the main unit

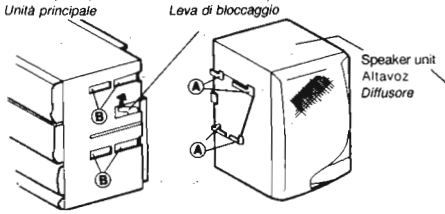

- Be sure to install the speakers on a flat surface.
1. Raise the lock lever as shown by the arrow.
2. Align speaker protrusions Ⓐ to slits Ⓑ of main unit and slide the speaker forward till it is attached.
3. While pressing the center rear of speaker forward, lower the lock lever to fix the speaker. (Confirm the "click" sound to lock.)
- Attach the other speaker in the same way.

FIJACION/RETIRO DE ALTAVOCES

Cuando utilice los altavoces fijados en la unidad principal

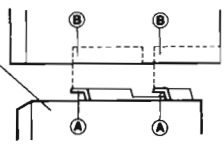

- Asegúrese de instalar los altavoces sobre una superficie plana.
1. Eleve la palanca de bloqueo como indica la flecha.
2. Alinee las salientes Ⓐ del altavoz con las ranuras Ⓑ de la unidad principal, y deslice el altavoz hacia adelante hasta que quede instalado.
3. Para fijar el altavoz, baje la palanca de fijación mientras presiona la parte central trasera del altavoz hacia adelante. (Confirme el "clic" para el bloqueo).
- Coloque el otro altavoz de la misma forma.

APPLICAZIONE/RIMOZIONE DEI DIFFUSORI

Quando si utilizza l'unità con i diffusori applicati

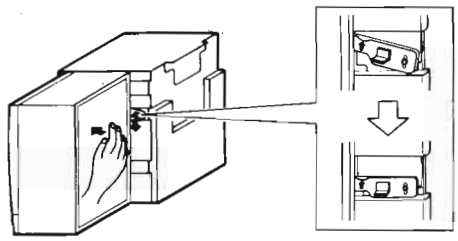

- *Accertarsi di installare i diffusori su una superficie in piano.*
1. *Sollevare la leva di bloccaggio come indicato dalla freccia.*
2. *Allineare le sporgenze del diffusore Ⓐ con le fessure Ⓑ dell'unità principale e far scorrere il diffusore fino ad inserirlo completamente.*
3. *Premere al centro del retro del diffusore ed abbassare la leva di bloccaggio per fissare il diffusore. (Accertarsi di udire lo scatto di bloccaggio).*
- *Applicare l'altro diffusore seguendo la stessa procedura.*

6

When using the speakers detached from the main unit
Raise the lock lever and slide the speaker backward to detach the speaker from the main unit.

Notes:
- Reconfirm that the speakers are securely attached by checking the lock lever position and pressing the speaker forward and backward.
- Since the speakers sound differently according to where they are placed, carefully place them for optimal effect within the length of the provided speaker cords. It is recommended that the left and right speakers be placed symmetrically in relation to the main unit.

Para utilizar los altavoces separados de la unidad principal
Levante la palanca de bloqueo y deslice el altavoz hacia atrás, para extraerlo de la unidad principal.

Notas:
- Reconfirme que los altavoces estén firmemente instalados verificando la posición de la palanca de bloqueo y empujando el altavoz hacia adelante y hacia atrás.
- Ya que el sonido de los altavoces difiere según su ubicación, colóquelos cuidadosamente a fin de lograr un efecto óptimo según la longitud de los cables suministrados. Se recomienda ubicar los altavoces derecho e izquierdo en forma simétrica con respecto a la unidad principal tal como se muestra.

Quando si utilizzano i diffusori staccati dall'unità principale
Sollevare la leva di bloccaggio e rimuovere il diffusore dall'unità principale facendolo scorrere.

Note:
- *Accertarsi che i diffusori siano ben installati controllando la posizione della leva di bloccaggio e spingendo in diffusore avanti ed indietro.*
- *Dato che i diffusori suonano in modo diverso a seconda della loro posizione, posizionarli in modo ottimale utilizzando la lunghezza disponibile del cavo. Si raccomanda di posizionare i diffusori sinistro e destro simmetricamente rispetto all'unità principale.*

CONNECTIONS

- Do not switch the power on until all connections are completed.

Antenna connection and adjustment

- AM (MW/LW) loop antenna adjustment

CONEXIONES

- No encienda la unidad hasta haber concluido todas las conexiones.

Conexión y ajuste de la antena

- Ajuste de la antena de cuadro de AM (OM/OL)

COLLEGAMENTI

- *Non attivare l'alimentazione prima del completamento dei collegamenti.*

Collegamento e regolazione antenna

- *Regolazione antenna AM ad anello (MW/LW)*

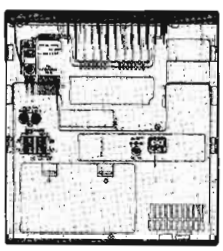

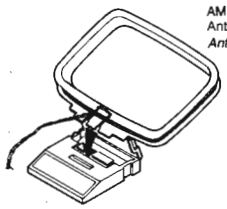

Insert in the direction of the arrow.
Inserte en la dirección de la flecha.
Inserire nella direzione della freccia.

AM (MW/LW) loop antenna
Antena de cuadro de AM (OM/OL)
Antenna AM (MW/LW) ad anello

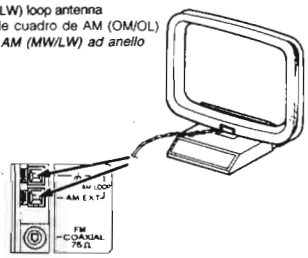

AM (MW/LW) loop antenna
Antena de cuadro de AM (OM/OL)
Antenna AM (MW/LW) ad anello

- Keep the loop antenna away from the rear panel of the unit and install it so that the best reception is obtained. (Do not leave the antenna wire in a bundle.)
- Mantenga la antena de cuadro lejos del panel posterior de la unidad e instálela de tal modo que pueda obtenerse la mejor recepción. (No deje enrollado el cable de la antena.)
- *Tenere l'antenna ad anello lontana dal pannello posteriore dell'unità ed installarla in modo da ottenere la migliore ricezione possibile. (Non lasciare avvolto il filo dell'antenna).*

7

- FM antenna connections and adjustments

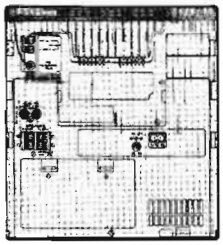

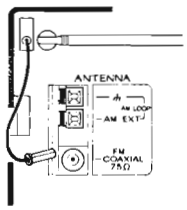

- Use an outdoor antenna by disconnecting the cable wire from the FM antenna terminal when stable reception cannot be obtained with the telescopic antenna.
- Cuando no pueda obtener una recepción estable la antena telescópica, utilice una antena exterior desconectando el cable del terminal de la antena de FM.
- *Utilizzare un'antenna esterna, scollegando il cavo dal terminale dell'antenna FM, quando l'antenna telescopica non permette una ricezione stabile.*

- The provided antenna adapter is designed for a 75-ohm antenna cable. When a 300-ohm antenna cable is used, a 300 to 75-ohm conversion adapter available from an audio store is required.
- La antena suministrada está diseñada para un cable de antena de 75 ohmnios. Cuando se utiliza el cable de antena de 300 ohmnios es necesario instalar un adaptador de conversión de 300 a 75 ohmnios, obtenible en una tienda de audio.
- *L'alimentatore per antenna è disegnato per un cavo per antenna da 75 Ω. Se si usa un cavo da 300 Ω, è necessario usare anche un convertitore da 300 Ω/75 Ω disponibile presso negozi audio.*

- Conexiones y ajustes de la antena de FM

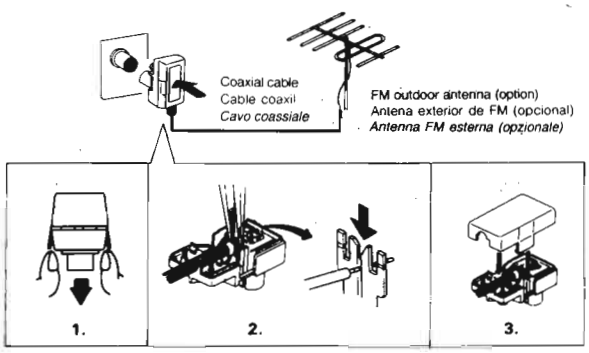

- *Collegamento e regolazione antenna FM*

Notes:
- Do not place the loop antenna on a metal desk or near a TV or personal computer.
- Installing an outdoor antenna requires experience; we recommend that your consult an audio dealer.
- Install the antenna cord away from the power and speaker cords as these could generate noise. And so keep the loop antenna away from the rear of the unit.

Notas:
- No coloque la antena de cuadro sobre un escritorio metálico o cerca de un televisor o computadora personal.
- Para instalar la antena exterior se requiere de experiencia; le recomendamos que consulte a su vendedor de equipos de audio.
- Instale el cable de la antena lejos de los cables de alimentación y de altavoces porque podrían generar ruidos. Por lo tanto, mantenga la antena de cuadro lejos de la parte trasera de la unidad.

Note:
- *Non installare l'antenna ad anello su di un tavolo metallico oppure nelle vicinanze di un televisore o di un personal computer.*
- *L'installazione di un'antenna esterna richiede esperienza; si raccomanda di consultare un rivenditore specializzato.*
- *Installare il cavo dell'antenna lontano dai cavi dell'alimentazione e dei diffusori in quanto questi possono causare disturbi. Tenere perciò l'antenna ad anello lontana dal retro dell'unità.*

Speaker cord connection

Right speaker (rear side)
Altavoz derecho (lado posterior)
Diffusore destro (lato posteriore)

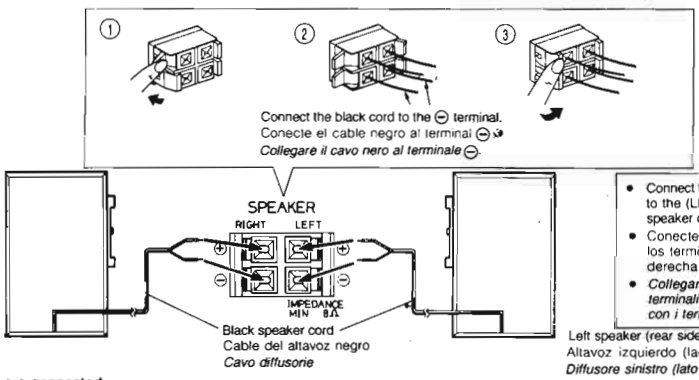

- Connect the cord from the speaker on the left to the (LEFT) terminals and the cord from the speaker on the right to the (RIGHT) terminals.
- Conecte el cable del altavoz de la izquierda a los terminales (LEFT) y el cable del altavoz de la derecha a los terminales (RIGHT).
- *Collegare il cavo del diffusore a sinistra con i terminali (LEFT) ed il cavo del diffusore a destra con i terminali (RIGHT).*

Left speaker (rear side)
Altavoz izquierdo (lado posterior)
Diffusore sinistro (lato posteriore)

Notes:
- The polarity with which the two speakers are connected will be the same if the black speaker cords are connected to the ⊖ terminals. If the speakers are connected with reverse polarity, the stereo effect and tone will be degraded.
- The speakers of this unit are not magnetically shielded. When they are placed directly on or adjacent to a TV, the TV's color could be distorted. Install the speakers more than 10 cm away from your TV.
- When connecting the speaker cord, make sure that the wire core, not the insulating cover, is connected to the speaker terminal. Otherwise, sound cannot be heard.

Connection of external audio units

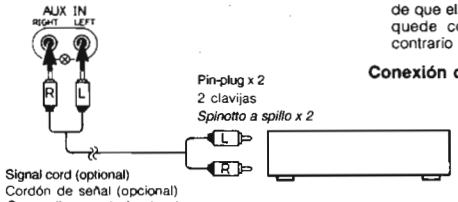

Notas:
- La polaridad de los dos altavoces será la misma si los cables negros de los altavoces están conectados a los terminales ⊖. Si los altavoces están conectados con las polaridades invertidas, disminuirá la calidad del efecto estereofónico y de la tonalidad.
- Los altavoces de esta unidad no están protegidos magnéticamente. Cuando se colocan directamente sobre o cerca de un televisor, es posible que se distorsione el color de las imágenes televisivas. Instale los altavoces a más de 10 cm. del televisor.
- Cuando conecta el cordón del altavoz, asegúrese de que el núcleo del cable, y no la cubierta aislante, quede conectado al terminal del altavoz, de lo contrario no se escuchará sonido.

Conexión de unidades externas de audio

Note:
- *Le polarità dei due diffusori vengono orientate allo stesso modo, vale a dire col cavo nero collegato ai terminali negativi ⊖.*
  Se le polarità dei diffusori sono invertite, l'effetto stereo ed i toni degradano.
- *I diffusori di quest'unità non sono schermati magneticamente e non devono quindi venire installati vicino o sopra un televisore, o la riproduzione del colore ne risentirà. I diffusori devono distare almeno 10 cm dal televisore.*
- *Nel collegare i cavi dei diffusori, controllare che sia l'anima in rame del cavo e non l'isolante a fare presa col morsetto. La riproduzione risulta altrimenti impossibile.*

Collegamento di componenti esterni

POWER SUPPLY

A. Connection of AC power cord

- Connect the AC power cord after all other connections have been made.

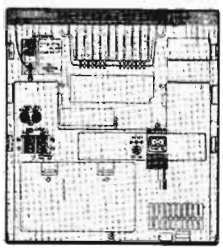

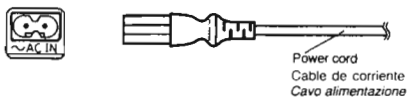

CAUTIONS:
1. **ONLY USE WITH JVC POWER CORD PROVIDED WITH THIS UNIT TO AVOID MALFUNCTION OR DAMAGE TO THE UNIT. REMOVE BATTERIES WHEN USING THE POWER CORD.**
2. **BE SURE TO UNPLUG THE POWER CORD FROM THE OUTLET WHEN GOING OUT OR WHEN THE UNIT IS NOT IN USE FOR AN EXTENDED PERIOD OF TIME.**

ALIMENTACION

A. Conexión del cable de corriente alterna

- Conecte el cable de corriente alterna después de haber concluido todas las demás conexiones.

PRECAUCIONES:
1. **UTILICE EL CABLE DE ALIMENTACIÓN JVC SUMINISTRADO CON ESTE APARATO PARA EVITAR FALLAS O DAÑOS. RETIRE LAS PILAS CUANDO UTILICE EL CABLE.**
2. **DESENCHUFE EL CABLE DE ALIMENTACIÓN DEL TOMACORRIENTE AL AUSENTARSE DE SU CASA O CUANDO NO UTILICE EL APARATO POR MUCHO TIEMPO.**

ALIMENTAZIONE

A. Collegamento del cavo di alimentazione CA

- *Collegare il cavo di alimentazione CA dopo aver eseguito tutti gli altri collegamenti.*

PRECAUZIONI:
1. **UTILIZZARE SOLO IL CAVO DI ALIMENTAZIONE JVC IN DOTAZIONE A QUESTA UNITA' PER EVITARE DISFUNZIONI O DANNI ALL'UNITA' STESSA.**
   RIMUOVERE LE BATTERIE QUANDO SI UTILIZZA IL CAVO DI ALIMENTAZIONE.
2. **ACCERTARSI DI SCOLLEGARE IL CAVO DI ALIMENTAZIONE DALLA PRESA DI RETE QUANDO SI ESCE O QUANDO SI PREVEDE DI NON UTILIZZARE L'UNITA' PER UN PERIODO PROLUNGATO.**

10

B. Operation on batteries

- **Loading batteries**

1. Open the battery cover by pulling it toward you while pressing the sections marked by the arrows.
2. Insert 9 "R20" size batteries as shown in the diagram.
   * Be careful to insert the batteries with the ⊕ and ⊖ terminals positioned correctly.
3. Replace the cover.

B. Funcionamiento con pilas

- **Colocación de las pilas**

1. Abra la tapa del compartimiento de las pilas tirándola hacia Vd mientras presiona las secciones marcadas por las flechas.
2. Inserte 9 pilas "R20" como se muestra en el diagrama.
   * Coloque las pilas en el compartimiento posicionando correctamente los terminales ⊕ y ⊖.
3. Vuelva a colocar la tapa.

B. Funzionamento con batterie

- **Inserimento batterie**

1. *Aprire il coperchio del vano batterie tirandolo verso di sè mentre si preme sulle sezioni marcate dalle frecce.*
2. *Inserire 9 batterie di formato "R20" come indicato in figura.*
   * *Fare attenzione ad inserire le batterie con i terminali ⊕ e ⊖ posizionati in modo corretto.*
3. *Reinserire il coperchio.*

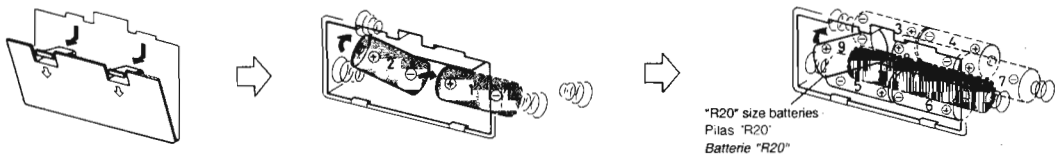

Checking batteries
When the tape speed or output sound decreases, or CD playback is intermittent, replace all batteries with fresh ones.
When making an important recording, use new batteries (preferably alkaline batteries with a longer service life) to avoid any possible failure.
- For better battery usage
  Continuous operation of the unit causes the battery power to be consumed quicker than noncontinuous operation.
  Operation of the unit in a cold place causes the battery power to be consumed more quickly than in a warm place.

CAUTIONS:
- **WHEN NOT USING THE UNIT FOR A LONG TIME (MORE THAN TWO WEEKS) OR WHEN ALWAYS USING HOUSEHOLD AC, REMOVE THE BATTERIES TO AVOID A MALFUNCTION OR DAMAGE TO THE UNIT.**
- **WHEN THE JVC POWER CORD PROVIDED WITH THIS UNIT IS CONNECTED, THE POWER IS AUTOMATICALLY SWITCHED FROM THE BATTERIES TO THE HOUSEHOLD AC EVEN WHEN THE BATTERIES ARE LOADED. HOWEVER, REMOVE THE BATTERIES WHEN USING THE POWER CORD.**

11

Verificación de las pilas
Cuando disminuya la velocidad de la cinta o el sonido de salida, o cuando la reproducción de CD sea intermitente, cambie todas las pilas por nuevas.
Cuando efectúe una grabación importante, utilice pilas nuevas (preferentemente alcalinas para mayor duración) a fin de evitar posibles fallas.
- Para una mejor utilización de las pilas
  Si este aparato se utiliza continuamente, las pilas se gastarán más rápido que si se utiliza de vez en cuando.
  Si se utiliza en un lugar frío, las pilas se consumirán más rápidamente que si se utiliza en un lugar cálido.

PRECAUCIONES:
- **CUANDO NO VAYA A UTILIZAR EL APARATO POR MUCHO TIEMPO (MAS DE DOS SEMANAS) O CUANDO USE SIEMPRE CORRIENTE ALTERNA, RETIRE LAS PILAS PARA EVITAR FALLAS DE FUNCIONAMIENTO Y DAÑOS.**
- **CUANDO SE CONECTA EL CABLE DE ALIMENTACIÓN SUMINISTRADO CON EL APARATO, LA ALIMENTACIÓN SE CONMUTA AUTOMÁTICAMENTE A CORRIENTE ALTERNA, AUNQUE HAYA PILAS CARGADAS.**
  NO OBSTANTE, RETIRE LAS PILAS CUANDO UTILICE EL CABLE DE ALIMENTACION.

Controllo batterie
Quando la velocità del nastro o il suono in uscita diminuiscono oppure quando la riproduzione del CD è intermittente, sostituire tutte le batterie con altre di nuove.
Quando si esegue una registrazione importante, utilizzare batterie nuove (preferibilmente batterie alcaline di maggiore durata) onde evitare quansiasi problema.
- *Per un migliore utilizzo delle batterie*
  L'uso continuo dell'unità scarica le batterie più velocemente di un uso saltuario.
  L'uso dell'unità in un luogo freddo scarica le batterie più rapidamente che in un luogo caldo.

PRECAUZIONI:
- **QUANDO NON SI UTILIZZA L'UNITA' PER UN LUNGO PERIODO DI TEMPO (PIU' DI DUE SETTIMANE) OPPURE QUANDO SI UTILIZZA SEMPRE L'ALIMENTAZIONE DI RETE CA, RIMUOVERE LE BATTERIE PER EVITARE DISFUNZIONI O DANNI ALL'UNITA'.**
- **QUANDO IL CAVO DI ALIMENTAZIONE JVC IN DOTAZIONE A QUESTA UNITA' VIENE COLLEGATO, L'ALIMENTAZIONE VIENE COMMUTATA AUTOMATICAMENTE DALLE BATTERIE ALLA RETE CA ANCHE QUANDO LE BATTERIE SONO INSERITE. RIMUOVERE COMUNQUE LE BATTERIE QUANDO SI UTILIZZA IL CAVO DI ALIMENTAZIONE.**

CAUTIONS WHEN USING BATTERIES
When batteries are used incorrectly, it may result in the leakage of chemicals from the batteries or they may explode. The following care should be taken;
- Check that the positive (+) and negative (-) terminals of the batteries are positioned correctly and load them as shown in the diagram.
- Do not mix new and old batteries together, or mix different types of batteries.
- Do not try to recharge non-rechargeable batteries.
- Remove the batteries when the unit is not to be used for an extended period of time.

If chemicals from the batteries come in contact with your skin, wash them off immediately with water. If chemicals leak onto the unit, clean the unit completely.

PRECAUCIONES PARA EL USO DE LAS PILAS
Si se utiliza incorrectamente las pilas, ello puede resultar en fugas de productos químicos de las mismas y pueden explotar. Se deben tomar las siguientes precauciones:
- Verifique que el polo positivo (+) y el negativo (–) de las pilas estén correctamente colocados y que las mismas estén instaladas como se muestra enel diagrama.
- No mezcle pilas nuevas y viejas, o diferentes tipos de pilas.
- No intente recargar las pilas que no son recargables.
- Extraiga las pilas de la unidad cuando ésta no vaya a ser usada por un largo periodo.

Si los productos químicos provenientes de las pilas entran en contacto con la piel, lávese inmediatamente con agua. Si los productos químicos entran dentro de la unidad, limpiela.

PRECAUZIONI PER L'USO DELLE BATTERIE
Se le batterie vengono utilizzate in modo scorretto, si possono verificare perdite di sostanze chimiche o esplosioni. Osservare le precauzioni seguenti:
- *Controllare che i terminali positivo (+) e negativo (–) delle batterie siano posizionati correttamente ed inserire le batterie come indicato.*
- *Non mescolare batterie vecchie e nuove oppure tipi di batteria diversi.*
- *Non provare a ricaricare batterie non ricaricabili.*
- *Rimuovere le batterie quando si prevede di non utilizzare l'unità per un periodo di tempo prolungato.*

Se sostanze chimiche delle batterie entrassero in contatto con la pelle, lavare immediatamente con acqua. Se le sostanze chimiche entrassero in contatto con l'unità, lavare completamente l'unità stessa.

C. Operation on car battery (DC 12 V)

C. Funcionamiento con bateria de automóvil (12 V de CC)

C. Funzionamento con la batteria di una vettura (CC 12 V)

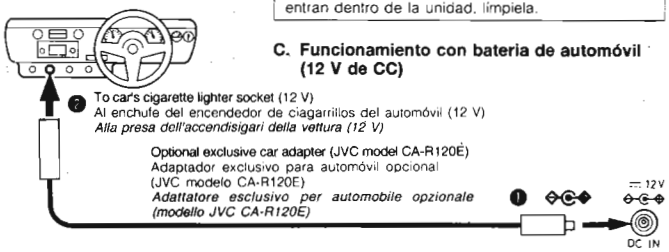

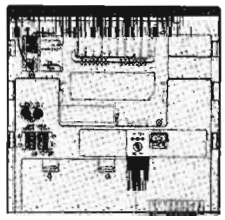

- First connect the car adapter to the DC IN 12 V jack, not the cigarette lighter socket, because shorting of a plug on the car may cause the fuse to blow out. In addition, be careful not to make a short-circuit between the plugs.
- **When using a car battery, be sure to use the specified car adapter (JVC model CA-R120E) to prevent mishaps or damage resulting from different polarity design.**

Note:
- When there is a power failure for more than 1 minute or the AC power cord is unplugged for more than 1 minute, the timer/clock setting is erased from memory. Reset the clock when the power supply is restored.

- Primero conecte el adptador al jack DC IN 12 V, no al enchufe del encendedor de cigarrillos, porque si pone en cortocircuito una clavija del automóvil, puede quemarse un fusible. Además, tenga cuidado de no producir un cortocircuito entre las clavijas.
- **Cuando utilice una bateria de automóvil, emplee el adaptador especificado (JVC modelo CA-R120E) para evitar fallas o daños por diferentes tipos de polaridad.**

Nota:
- Cuando haya un corte de energía de más de 1 minuto, o cuando se desconecte el cordón de CA durante más de un minuto, la programación del temporizador/reloj se borrará de la memoria. Reposicione el reloj cuando se restaure el suministro eléctrico.

- *Collegare prima l'alimentatore alla presa DC IN 12V e non alla presa dell'accendisigari in quanto un cortocircuito nella vettura potrebbe far saltare il fusibile. Inoltre, fare attenzione a non mettere in cortocircuito le prese.*
- **Quando si utilizza la batteria di una vettura per l'alimentazione, accertarsi di utilizzare l'alimentatore specificato (modello JVC CA-R120E) onde evitare danni derivanti da polarità differenti.**

Nota:
- *Quando si verifica un'interruzione di corrente oppure quando il cavo di alimentazione CA viene scollegato, l'impostazione del timer/orologio viene cancellata dalla memoria. Reimpostare l'orologio quando l'alimentazione viene riattivata.*

NAMES OF PARTS AND THEIR FUNCTIONS

NOMBRE DE LAS PARTES Y SUS FUNCIONES

NOMI E FUNZIONI DELLE PARTI

CD player/General section

Reproductor de CD/sección general

Lettore CD/sezione generale

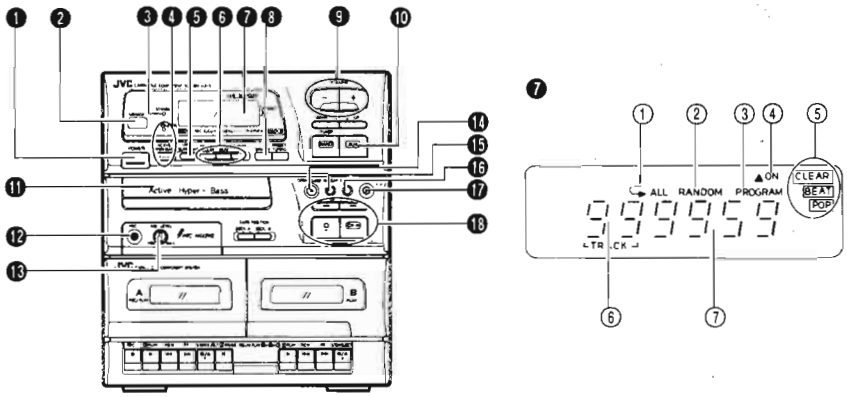

❶ POWER button
❷ SENSOR section
The remote control signal is received in the SENSOR section. When the POWER button is set to STANDBY with AC power supplied, IllumiMagic COMPU PLAY is activated by approaching this section with your hand.
❸ Power STANDBY indicator
❹ ACTIVE HYPER-BASS button and indicator
❺ LIVE SURROUND button
❻ Preset equalizer (PRESET EQ. (CLEAR/BEAT/POP)) buttons

❶ Botón POWER
❷ Sección SENSOR
La señal de control remoto es recibida en la sección SENSOR. Cuando se coloca el botón POWER en STANDBY con alimentación de CA, se activa IllumiMagic COMPU PLAY al aproximar la mano a esta sección.
❸ Indicador STANDBY de alimentación
❹ Botón e indicador ACTIVE HYPER-BASS
❺ Botón LIVE SURROUND
❻ Botones (PRESET EQ. (CLEAR/BEAT/POP) para programación del ecualizador

❶ *Tasto POWER*
❷ *Sezione SENSOR*
Il segnale dell'unità di telecomando viene ricevuto nella sezione SENSOR. Quando il tasto POWER è impostato su STANDBY con l'alimentazione CA, il modo IllumiMagic COMPU PLAY viene attivato avvicinando la mano a questa sezione.
❸ *Indicatore alimentazione STANDBY*
❹ *Tasto ed indicatore ACTIVE HYPER-BASS*
❺ *Tasto LIVE SURROUND*
❻ *Tasti preimpostazione equalizzatore (PRESET EQ. (CLEAR/BEAT/POP))*

❼ Display window
① Repeat play indicator
② RANDOM play indicator
③ PROGRAM mode indicator
④ LIVE SURROUND indicator
⑤ PRESET EQ. indicators
⑥ Function/Track number display
⑦ Play time display
❽ DISPLAY button
Use to display the current time.
❾ VOLUME buttons
+: Use to increase the volume.
–: Use to decrease the volume.
(control range from VOL 0 to VOL 50.)
❿ AUX button
⓫ CD tray
⓬ MIC jack
⓭ MIC LEVEL control
⓮ CD tray OPEN/CLOSE (⏏) button
⓯ REPEAT play button
⓰ RANDOM play button
⓱ Headphones jack (PHONES) (3.5 mm dia. stereo mini)
Connect headphones (impedance 16 Ω to 1 kΩ) to this jack. Speaker sound automatically switches off when the headphones are connected.
⓲ CD operation buttons
Play/pause button (▷❚❚) :
Press to play a disc or to stop temporarily.
Stop/clear button (□) :
Press to stop playing a disc or cancel programmed play. This also sets CD mode.
SEARCH buttons (|◀◀, ▶▶|) :
Press to locate the beginning of tunes and to start forward/reverse search operations.

❼ Visor de indicación
① Indicador de repetición de reproducción
② Indicador de reproducción RANDOM
③ Indicador de modo PROGRAM
④ Indicador LIVE SURROUND
⑤ Indicadores PRESET EQ.
⑥ Indicación de función/número de pista
⑦ Indicación del tiempo de reproducción
❽ Botón DISPLAY
Utilícelo para llamar la hora actual.
❾ Botones VOLUME
+ : Utilícelo para aumentar el volumen.
– : Utilícelo para reducir el volumen.
(límites de control de VOL 0 a VOL 50.)
❿ Botón AUX
⓫ Portadisco de CD
⓬ Jack MIC
⓭ Control MIC LEVEL
⓮ Botón (⏏) OPEN/CLOSE del portadisco de CD
⓯ Botón de reproducción REPEAT
⓰ Botón de reproducción RANDOM
⓱ Jack PHONES para audífonos (mini estéreo 3,5 mm. de diám.)
Conecte los audífonos (impedancia de 16 Ω a 1 kΩ), a este jack.
Cuando se conectan los audífonos, el sonido del altavoz es automáticamente silenciado.
⓲ Botones para operación de CD
Botón (▷❚❚) de reproducción/pausa:
Presiónelo para reproducir un disco o para parar temporariamente.
Botón (□) de parada/borrado:
Presiónelo para detener la reproducción de un disco o cancelar la reproducción programada. Este también activa el modo de CD.
Botónes (|◀◀, ▶▶|) de SEARCH:
Presiónelo para localizar el inicio de las músicas y para iniciar las operaciones de búsqueda hacia adelante/atrás.

❼ *Finestrella display*
① *Indicatore riproduzione ripetuta*
② *Indicatore riproduzione RANDOM*
③ *Indicatore modo PROGRAM*
④ *Indicatore LIVE SURROUND*
⑤ *Indicatori PRESET EQ.*
⑥ *Visualizzazione funzione/numero brano*
⑦ *Visualizzazione tempo di riproduzione*
❽ *Tasto DISPLAY*
Utilizzarlo per visualizzare l'orario corrente.
❾ *Tasti VOLUME*
+: Utilizzarlo per aumentare il volume.
–: Utilizzarlo per diminuire il volume.
(gamma controllo da VOL 0 a VOL 50).
❿ *Tasto AUX*
⓫ *Piatto CD*
⓬ *Presa MIC*
⓭ *Comando MIC LEVEL*
⓮ *Tasto OPEN/CLOSE (⏏) piatto CD*
⓯ *Tasto riproduzione REPEAT*
⓰ *Tasto riproduzione RANDOM*
⓱ *Presa cuffie (PHONES) (mini stereo diam.3,5 mm)*
Collegare le cuffie (impedenza da 16Ω a 1kΩ) a questa presa. Quando le cuffie vengono collegate, il suono dei diffusori viene interrotto automaticamente.
⓲ *Tasti funzionamento lettore CD*
Tasto riproduzione/pausa (▷❚❚):
Premerlo per riprodurre un CD o per entrare nel modo di pausa.
Tasto arresto/cancellazione (□):
Premerlo per interrompere la riproduzione di un CD oppure per cancellare la riproduzione programmata. Questo tasto imposta anche il modo CD.
Tasti SEARCH (|◀◀, ▶▶|):
Premerli per localizzare l'inizio dei brani e per avviare le operazioni di ricerca in avanti/all'indietro.

Tuner/Deck section

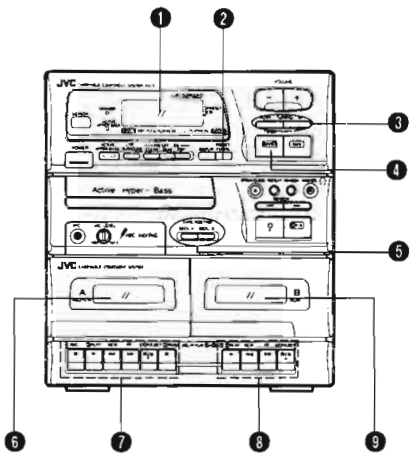

Sección del sintonizador/platina

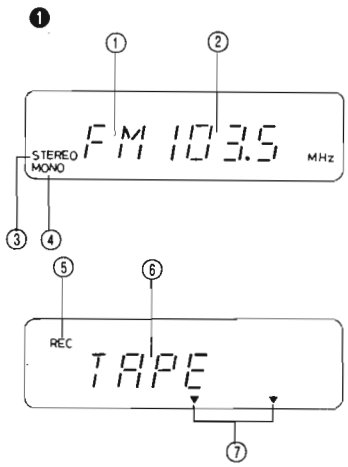

Sezione sintonizzatore/registratore

❶ Display window
① Band indicator (FM/AM (MW/LW))
② Radio frequency display
③ STEREO indicator
④ MONO indicator
⑤ Recording (REC) indicator
⑥ Tape (TAPE) mode display
⑦ Tape position indicator
❷ PRESET TUNING button
❸ TUNING (UP/DOWN) buttons
❹ TUNER/BAND button
Press to select tuner mode.
Press to select the band (FM/AM (MW/LW)).

❶ Visor de indicación
① Indicador de banda (FM/AM (OM/OL))
② Indicación de frecuencia de radio
③ Indicador STEREO
④ Indicador MONO
⑤ Indicador (REC) de grabación
⑥ Indicador (TAPE) del modo de cinta
⑦ Indicador de la posición de la cinta
❷ Botón PRESET TUNING
❸ Botones TUNING (UP/DOWN)
❹ Botón TUNER/BAND
Presiónelo para seleccionar el modo de sintonizador.
Presiónelo para seleccionar la banda (FM/AM (OM/OL)).

❶ *Finestrella display*
① *Indicatore banda (FM/AM (MW/LW))*
② *Visualizzazione frequenza*
③ *Indicatore STEREO*
④ *Indicatore MONO*
⑤ *Indicatore registrazione (REC)*
⑥ *Visualizzazione modo registratore (TAPE)*
⑦ *Indicatore tipo nastro*
❷ *Tasto PRESET TUNING*
❸ *Tasti TUNING (UP/DOWN)*
❹ *Tasto TUNER/BAND*
Premerlo per selezionare il modo del sintonizzatore.
Premerlo per selezionare la banda (FM/AM (MW/LW))

❺ Tape position (TAPE POSITION-DECK A/DECK B) buttons
Set these buttons according to the type of tape to be used.
- When recording (Deck A only):
  When recording using a CrO_2 tape, "▼" is shown in the display window.
- When playing back (Decks A and B):
  When playing back using METAL or CrO_2 tape, "▼" is shown in the display window.

❻ Cassette holder (Deck A)
❼ Cassette operation buttons (Deck A)
○ REC:
Press this button with the ► PLAY button to start recording.
► PLAY:
Press to play the tape.
◄◄ REW:
Press to rewind the tape rapidly.
►► FF:
Press to wind the tape forward rapidly.
■/▲ STOP/EJECT:
Press to stop the tape. Pressing this button when the tape has stopped opens the cassette holder.
❚❚ PAUSE:
Press to stop the tape temporarily. Press again to release the pause mode.
❽ Cassette operation buttons (Deck B)
► PLAY:
Press to play the tape.
◄◄ REW:
Press to rewind the tape rapidly.
►► FF:
Press to wind the tape forward rapidly.
■/▲ STOP/EJECT:
Press to stop the tape. Pressing this button when the tape has stopped opens the cassette holder.
❾ Cassette holder (Deck B)

❺ Botones (TAPE POSITION-DECK A/DECK B) de posición de la cinta
Coloque los botones de acuerdo al tipo de cinta que va a utilizar.
- Cuando graba (platina A exclusivamente):
  Cuando graba usando cinta de CrO_2, "▼" aparece en el visor de indicación.
- Cuando reproduce (platinas A y B):
  Cuando reproduce una cinta METAL o CrO_2, "▼" aparece en el visor de indicación.

❻ Portacassette (platina A)
❼ Botones de operación del cassette (platina A)
○ REC:
Para iniciar la grabación, presione este botón conjuntamente con el botón ► PLAY.
► PLAY:
Presiónelo para reproducir la cinta.
◄◄ REW:
Presiónelo para rebobinar la cinta rápidamente.
►► FF:
Presiónelo para avanzar la cinta rápidamente.
■/▲ STOP/EJECT:
Presiónelo para detener la cinta. Al presionar este botón cuando la cinta está detenida, se abre el portacassette.
❚❚ PAUSE:
Presiónelo para parar la cinta temporariamente. Presiónelo otra vez para desactivar el modo de pausa.
❽ Botones para operación del cassette (platina B)
► PLAY:
Presiónelo para reproducir la cinta.
◄◄ REW:
Presiónelo para rebobinar la cinta rápidamente.
►► FF:
Presiónelo para avanzar la cinta rápidamente.
■/▲ STOP/EJECT:
Presiónelo para detener la cinta. Al presionar este botón cuando la cinta está detenida, se abre el portacassette.
❾ Portacassette (platina B)

❺ *Tasti tipo nastro (TAPE POSITION DECK A/DECK B)*
Impostare questi tasti a seconda del tipo di nastro utilizzato.
- *Per la registrazione (solo piastra A):*
  Quando si registra utilizzando un nastro CrO_2, viene visualizzata l'indicazione "▼".
- *Per la riproduzione (piastre A e B):*
  Quando si riproduce un nastro Metal o CrO_2, viene visualizzata l'indicazione "▼".

❻ *Vano portacassetta (Piastra A)*
❼ *Tasti registratore a cassette (Piastra A)*
○ REC:
Premere questo tasto assieme al tasto ► PLAY per iniziare la registrazione.
► PLAY:
Premere questo tasto per riprodurre il nastro.
◄◄ REW:
Premere questo tasto per riavvolgere rapidamente il nastro.
►► FF:
Premere questo tasto avvolgere rapidamente il nastro.
■/▲ STOP/EJECT:
Premere questo tasto per interrompere lo scorrimento del nastro. La pressione di questo tasto a nastro fermo apre il vano portacassetta.
❚❚ PAUSE:
Premere questo tasto per interrompere temporaneamente lo scorrimento del nastro. Premerlo nuovamente per abbandonare il modo di pausa.
❽ *Tasti registratore a cassette (Piastra B)*
► PLAY:
Premere questo tasto per riprodurre il nastro.
◄◄ REW:
Premere questo tasto per riavvolgere rapidamente il nastro.
►► FF:
Premere questo tasto avvolgere rapidamente il nastro.
■/▲ STOP/EJECT:
Premere questo tasto per interrompere lo scorrimento del nastro. La pressione di questo tasto a nastro fermo apre il vano portacassetta.
❾ *Vano portacassetta (Piastra B)*

- **Rear and Top panels**

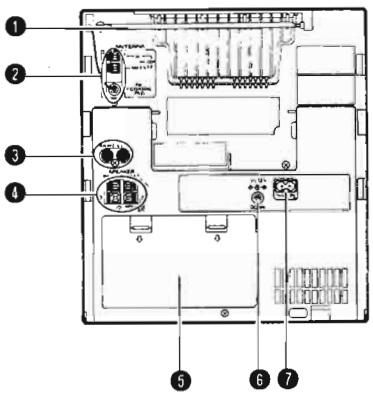

❶ Telescopic antenna
❷ External ANTENNA terminals
❸ AUX IN jacks
❹ SPEAKER terminals
Connect the provided speakers to these terminals.
❺ Battery compartment cover
❻ DC IN 12V jack (⊖-⊂-⊕)
❼ AC IN (AC input) jack
❽ Carry handle

- **Paneles trasero y superior**

❶ Antena telescópica
❷ Terminales de ANTENNA externos
❸ Jacks AUX IN
❹ Terminales SPEAKER
Conecte los altavoces suministrados a estos terminales.
❺ Tapa del compartimiento de las pilas
❻ Jack DC IN 12 V (⊖-⊂-⊕)
❼ Jack AC IN (entrada de CA)
❽ Manija para transporte

- **Pannelli posteriore e superiore**

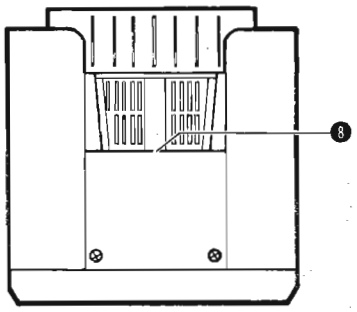

❶ *Antenna telescopica*
❷ *Terminali ANTENNA esterna*
❸ *Prese AUX IN*
❹ *Terminali SPEAKER*
Collegare a questi terminali i diffusori forniti in dotazione all'unità.
❺ *Coperchio vano batterie*
❻ *Presa DC IN 12V (ingresso CC) (⊖-⊂-⊕)*
❼ *Presa AC IN (ingresso CA)*
❽ *Maniglia trasporto*

REMOTE CONTROL UNIT

Preparation before use

- **Installing batteries in the remote control unit**

1. Remove the battery cover from the back of the remote control unit.
2. Insert two "R6" size batteries.
   - Insert the batteries with the ⊕ and ⊖ terminals matching the indication inside the battery compartment.

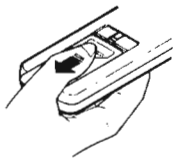

3. Replace the cover.

- **Battery replacement**
  When the remote control operation becomes unstable or the distance from which remote control is possible becomes shorter, replace the batteries with new ones.

Using the remote control unit

To use the remote control unit, point it at the REMOTE SENSOR and press the buttons gently and firmly. Remote control operation is possible within about 7 m (approx. 23 ft). However, since the remote control range is less when the unit is used at an angle, use directly in front of the REMOTE SENSOR, as far much possible.
Do not expose the REMOTE SENSOR to strong light (direct sunlight or artificial lighting) and make sure that there are no obstacles between the REMOTE SENSOR and the remote control unit.

UNIDAD DE CONTROL REMOTO

Preparación previa

- **Colocación de las pilas en el control remoto**

1. Saque la tapa de las pilas en la parte posterior del control remoto.
2. Coloque 2 pilas de tamaño "R6".
   - Coloque las pilas teniendo en cuenta que los terminales ⊕ y ⊖ coincidan con las indicaciones dentro del compartimiento de las pilas.

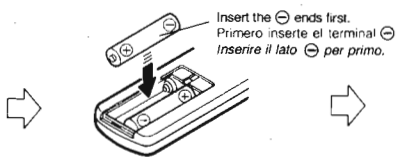

3. Vuelva a colocar la tapa.

- **Cambio de las pilas**
  Cuando el funcionamiento del control remoto sea inestable o disminuya la distancia de operación, cambie las pilas por otras nuevas.

Uso de la unidad de control remoto

Cuando utilice esta unidad, diríjala hacia REMOTE SENSOR y presione los botones suave y firmemente. El control remoto es posible dentro de un límite aproximado de 7 m. No obstante, puesto que el alcance disminuye cuando se emplea la unidad desde un ángulo, utilícela en lo posible situándose directamente frente a REMOTE SENSOR.
No exponga REMOTE SENSOR a luces intensas (directamente al sol o luces artificiales) y asegúrese que no haya ningún obstáculo entre REMOTE SENSOR y la unidad de control remoto.

UNITA' DI TELECOMANDO

Preparativi prima dell'uso

- **Installazione delle batterie nel telecomando**

1. *Rimuovere il coperchio del vano batterie dal retro del telecomando.*
2. *Inserire due batterie di formato "R6".*
   - *Inserire le batterie con i terminali ⊕ e ⊖ orientati come indicato all'interno del vano stesso.*

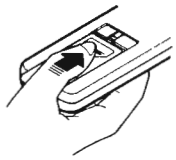

3. *Reinstallare il coperchio.*

- **Sostituzione batterie**
  Quando il funzionamento del telecomando diviene instabile oppure la distanza di funzionamento si accorcia, sostituire le batterie con altre di nuove.

Uso dell'unità di telecomando

Per utilizzare l'unità di telecomando, puntarla verso la sezione REMOTE SENSOR e premere i tasti con gentilezza ma con fermezza. Il funzionamento col telecomando è possibile fino ad una distanza di circa 7 m. Comunque, dato che il campo di funzionamento del telecomando è inferiore quando l'unità viene utilizzata da una posizione ad angolo, utilizzare l'unità direttamente di fronte alla sezione REMOTE SENSOR per quanto possibile.
Non esporre la sezione REMOTE SENSOR ad una illuminazione eccessiva (luce solare diretta o luce artificiale) ed accertarsi che non vi siano ostacoli tra l'unità di telecomando e la sezione REMOTE SENSOR.

The following operations can be performed using the remote control unit.

- **Check the functions of the operation buttons carefully and operate them correctly.**

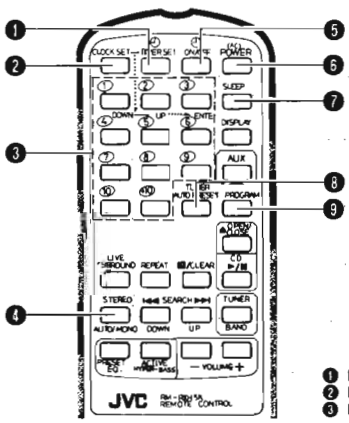

❶ (⏲) TIMER SET button
❷ CLOCK SET button
❸ Track (tune) number buttons (No.1 to No.10, +10)
Preset station buttons (No.1 to No.10, +10)
- Buttons No.1 to No.3 are also used for clock and timer settings.

❹ STEREO AUTO/MONO button
❺ Timer (⏲) ON/OFF button
❻ POWER (AC) button
- When power is supplied from batteries, even when the button is pressed, the unit will not be switched on. Switch on the POWER button of the main unit first, then perform operations.

❼ SLEEP button
❽ TUNER AUTO PRESET button
❾ PROGRAM button

- Buttons not mentioned here have the same functions as those on the main unit.

Las siguientes operaciones pueden realizarse utilizando la unidad de control remoto.

- **Estudie detenidamente las funciones de los botones de operación y utilícelos correctamente.**

❶ Botón (⏲) TIMER SET
❷ Botón CLOCK SET
❸ Botones numéricos de pista (música) (No. 1 a No. 10, +10)
Botones de estaciones presintonizadas (No. 1 a No. 10, +10)
- Los botones No. 1 a No. 3 también son utilizados para el ajuste del reloj y del temporizador.

❹ Botón STEREO AUTO/MONO
❺ Botón (⏲) ON/OFF del temporizador
❻ Botón POWER (AC)
- Si se suministra energía de las pilas, aún cuando se presione este botón, la unidad no se activará. Primero conecte la alimentación con el botón POWER de la unidad principal y luego ejecute las operaciones.

❼ Botón SLEEP
❽ Botón TUNER AUTO PRESET
❾ Botón PROGRAM

- Los botones que no han sido mencionados aquí tienen las mismas funciones que las de la unidad principal.

Le operazioni seguenti possono essere eseguite utilizzando l'unità di telecomando.

- **Controllare con attenzione le funzioni dei vari tasti ed utilizzare quindi i tasti in modo corretto.**

❶ *Tasto (⏲) TIMER SET*
❷ *Tasto CLOCK SET*
❸ *Tasti numero brano (dal No. 1 al No. 10, +10)*
Tasti stazioni preselezionate (dal No. 1 al No. 10, +10)
- *I tasti dal No. 1 al No. 3 vengono utilizzati anche per le impostazioni dell'orologio e del timer.*

❹ *Tasto STEREO AUTO/MONO*
❺ *Tasto timer (⏲) ON/OFF*
❻ *Tasto POWER (AC)*
- *Quando l'alimentazione viene fornita dalle batterie, anche se questo tasto viene premuto l'alimentazione non viene attivata. Attivare prima l'alimentazione col tasto POWER dell'unità principale e quindi eseguire le operazioni.*

❼ *Tasto SLEEP*
❽ *Tasto TUNER AUTO PRESET*
❾ *Tasto PROGRAM*

- *I tasti non menzionati possiedono le stesse funzioni di quelli corrispondenti sull'unità principale.*

SWITCHING THE POWER ON/OFF | CONEXION/DESCONEXION DE LA ALIMENTACION | ACCENSIONE E SPEGNIMENTO

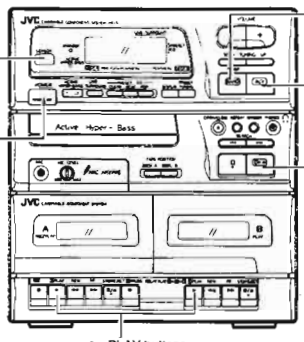

Switching the power on/off
- Switching on:

STANDBY
O

The indicator goes out.
Se apaga el indicador.
L'indicatore si spegne.

- Switching off:

STANDBY
O

The red indicator lights. (The indicator does not light when DC power is supplied.)
Se enciende el indicador rojo. (El indicador no se enciende cuando se suministra CC).
L'indicatore rosso si illumina. (L'indicatore non si illumina quando viene utilizzata l'alimentazione CC).

Conexión/desconexión de la alimentación
- Conexión:
- Desconexión:

Accensione e spegnimento
- *Accensione:*
- *Spegnimento*

One-touch operation (COMPU PLAY) (only when AC power is used)

Even when the power is set to STANDBY, pressing the button shown below switches on the power and selects the source.

Operación de un solo toque (COMPU PLAY) (solo cuando se usa CA)

Aun cuando la alimentación esté en STANDBY, el presionar el botón mostrado abajo, conecta la energía y selecciona la fuente.

Operazioni ad un tocco (COMPU PLAY) (solo quando si utilizza l'alimentazione CA)

Anche se l'unità si trova nel modo STANDBY, premendo uno dei tasti indicati di seguito essa si accende e una sorgente di segnale viene attivata.

	Function mode Modo de función *Modo di funzionamento*	Operations Operaciones *Operazioni*
	CD	When this button is pressed with a CD loaded, CD playback begins. Cuando se presiona este botón habiendo un CD colocado, comienza la reproducción del mismo. *Se questo tasto viene premuto a lettore CD carico, la riproduzione del CD ha immediatamente inizio.*
(Deck A) (Platina A) *(Piastra A)* 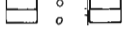	TAPE	When this button is pressed with a tape loaded, tape playback begins. Cuando se presiona este botón habiendo una cinta colocada, comienza la reproducción de la misma. *Se questo tasto viene premuto a registratore a cassette carico, la riproduzione della cassetta ha immediatamente inizio.*
	TUNER	When this button is pressed, the tuner is engaged. Cuando se presiona este botón, se activa el sintonizador. *Se questo tasto viene premuto, il sintonizzatore si accende.*
	AUX	A sound source connected to the AUX IN terminals can be engaged. Es posible escuchar una fuente de sonido conectada a los terminales AUX IN. *E' possibile utilizzare una fonte collegata ai terminali AUX IN.*

IllumiMagic COMPU PLAY (only when AC power is used)

When approaching the SENSOR section with your hand while the POWER button is set to STANDBY, the ▷II, BAND and AUX button indicators automatically blink for 10 seconds so that these button indicators can be easily found for sound source selection. COMPU PLAY operates effectively even after these indicators go out.
- If nothing is done while these indicators blink.....
  The blinking indicators go out after 10 seconds as mentioned above. Then, after 2 seconds elapse, IllumiMagic COMPU PLAY will be activated again.

IllumiMagic COMPU PLAY (solo cuando se usa CA)

Si el botón POWER está colocado en STANDBY y aproxima la mano a la sección SENSOR, los indicadores de los botones ▷II, BAND y AUX parpadean automáticamente durante 10 segundos para que usted pueda encontrarlos rápidamente para la selección de la fuente de sonido. COMPU PLAY funciona efectivamente aun después de que estos indicadores se apaguen.
- Si no se hace nada mientras estos indicadores están parpadeando.....
  Los indicadores parpadeantes se apagan después de transcurridos 10 segundos, como se menciona arriba. Luego, después de transcurridos 2 segundos, IllumiMagic COMPU PLAY se activa otra vez.

IllumiMagic COMPU PLAY (solo quando viene utilizzata l'alimentazione CA)

Quando si avvicina la mano alla sezione SENSOR mentre il tasto POWER è impostato su STANDBY, gli indicatori dei tasti ▷II, BAND ed AUX lampeggiano per 10 secondi in modo da poter essere identificati con facilità per selezionare la fonte. Questa funzione è efficace anche dopo che gli indicatori si sono spenti.
- *Se non viene eseguita alcuna operazione mentre gli indicatori lampeggiano ...*
  Gli indicatori si spengono dopo 10 secondi. Dopo circa 2 secondi, la funzione IllumiMagic COMPU PLAY viene attivata nuovamente.

Notes:
- When your hand approaches approx. 30 cm from the SENSOR section, the indicators blink.
- Since the sensor detects light reflection, an object other than a hand approaching the sensor can activate IllumiMagic COMPU PLAY. However, operational distance varies depending on the shape or color of object, or brightness of conditions.
- When an object is placed in front of the SENSOR section, the indicator may blink repeatedly. However, this is not a malfunction. Take one of the following measures.
  - Do not place anything in front of the remote SENSOR within a distance of 1 m.
  - Change the direction of this unit.
  - Relocate this unit.

When the indicator blinking is not required.....
When the POWER button is set to STANDBY, operate as follows.

Notas:
- Cuando aproxima la mano a 30 cm. aprox. de la sección SENSOR, los indicadores parpadean.
- Como el sensor detecta la luz rellejada, un objeto que no sea la mano y que se aproxime al sensor, puede activar IllumiMagic COMPU PLAY. Sin embargo, la distancia de funcionamiento varía dependiendo de la forma y color del objeto o de la iluminación.
- Cuando se coloca un objeto enfrente de la sección SENSOR, el indicador puede parpadear repetidamente. Sin embargo, esto no es una falla. Tome una de las siguientes medidas.
  - No coloque ningún objeto delante del SENSOR remoto a menos de 1 m de distancia.
  - Cambie la dirección de esta unidad.
  - Mueva la unidad.

Cuando no sea necesario que los indicadores parpadeen.....
Cuando se coloca el botón POWER en STANDBY, efectúe lo siguiente.

Note:
- *Gli indicatori iniziano a lampeggiare quando la mano si avvicina a circa 30 cm dalla sezione SENSOR.*
- *Dato che il sensore rileva la riflessione della luce, anche un oggetto diverso da una mano può attivare la funzione IllumiMagic COMPU PLAY. La distanza di funzionamento, comunque, varia a seconda della forma o del colore dell'oggetto oppure della luminosità ambientale.*
- *Quando un oggetto viene posizionato davanti alla sezione SENSOR, gli indicatori potrebbero lampeggiare ripetutamente. Ciò non rappresenta comunque una disfunzione. Prendere una delle misure seguenti.*
  - *Non porre alcun oggetto entro 1 metro dalla sezione SENSOR.*
  - *Cambiare la direzione dell'unità.*
  - *Cambiare la posizione dell'unità.*

Quando il lampeggio degli indicatori non è necessario ...
Quando il tasto POWER è impostato su STANDBY, eseguire quanto segue.

Press the POWER button while pressing the PRESET TUNING button.
Presione el botón POWER conjuntamente con el botón PRESET TUNING.
Premere il tasto POWER mentre si preme il tasto PRESET TUNING.

"OFF" is shown in the display window.
"OFF" aparece en el visor de indicación.
L'indicazione "OFF" viene visualizzata sul display.

- Perform the same operations to activate the IllumiMagic COMPU PLAY again.
  "ON" is shown in the display window.

- Ejecute las mismas operaciones para activar otra vez IllumiMagic COMPU PLAY.
  "ON" aparece en el visor de indicación.

- *Eseguire le stesse operazioni per riattivare IllumiMagic COMPU PLAY.*
  L'indicazione "ON" viene visualizzata sul display.

Notes:
1. When the CD tray OPEN/CLOSE (⏏) button is pressed, the sound source does not switch over, and the CD tray opens or closes.
   (When the POWER is switched off with the CD tray open, the CD tray closes, then the POWER switches off.)
2. When switching off the power, be sure to press the POWER button.

Notas:
1. Cuando se presiona el botón OPEN/CLOSE (⏏) del portadisco de CD, la fuente de sonido no se conmuta, y el portadisco de CD se abre o cierra.
   (Cuando se desconecta POWER con el portadisco de CD abierto, éste se cierra, luego se desconecta POWER).
2. Cuando desconecte la alimentación, asegúrese de presionar el botón POWER.

Note:
1. *Quando il tasto OPEN/CLOSE (⏏) del piatto del CD viene premuto, la fonte sonora non viene commutata ed il piatto del CD si apre o si chiude.*
   (Quando l'alimentazione viene disattivata utilizzando il tasto POWER col piatto del CD aperto, il piatto si chiude e quindi l'alimentazione viene disattivata).
2. *Quando si disattiva l'alimentazione, accertarsi di farlo premendo il tasto POWER.*

3. The COMPU PLAY button on the remote control has the same function as that on the main unit. IllumiMagic COMPU PLAY is activated using the main unit only.
4. If installed in an audio rack, the rack's front glass plate may impede the unit's SENSOR section function so that IllumiMagic COMPU PLAY may not be activated.
5. When the ○ REC or ► PLAY button is pressed for timer recording or playback, IllumiMagic COMPU PLAY cannot be activated. However, this is not a malfunction.

3. El botón COMPU PLAY del controlador remoto posee la misma función que el de la unidad principal. IllumiMagic COMPU PLAY se activa utilizando la unidad principal exclusivamente.
4. Si se lo instala en una estantería de audio, el vidrio frontal de la misma puede impedir que funcione la sección SENSOR de la unida, y por ello IllumiMagic COMPU PLAY puede no activarse.
5. Cuando se presiona el botón ○ REC o el ► PLAY para la grabación o reproducción por temporizador, no es posible activar IllumiMagic COMPU PLAY. Sin embargo, esto no es una falla.

3. *Il tasto COMPU PLAY del telecomando possiede la stessa funzione di quello sull'unità principale. La funzione IllumiMagic COMPU PLAY viene attivata solo con l'unità principale.*
4. *Se l'unità viene installata in uno scaffale per componenti audio, lo sportello di vetro potrebbe impedire il funzionamento della sezione SENSOR e quindi l'attivazione della funzione IllumiMagic COMPU PLAY .*
5. *Quando il tasto ○ REC ► PLAY viene premuto per la registrazione o riproduzione col timer, la funzione IllumiMagic COMPU PLAY non può essere attivata. Ciò non rappresenta comunque una disfunzione.*

VOLUME, TONE AND OTHER CONTROLS

VOLUME button

+ : Use to increase the volume.
– : Use to decrease the volume.
(control range from VOL 0 to VOL 50.)

Sound effect controls

This unit has three preset equalizer modes (CLEAR, BEAT, POP) and LIVE SURROUND mode. These modes can be selected to enhance the type of music being played.

Preset equalizer (PRESET EQ.)
When operating the main unit, use one of the PRESET EQ. buttons to select the mode. Press the same buttons again to cancel the mode.

When operating the remote control unit, each time the PRESET EQ. button is pressed, the equalizer mode changes as follows;

VOLUMEN, TONO Y OTROS CONTROLES

Botón VOLUME

+ : Utilícelo para aumentar el volumen.
– : Utilícelo para reducir el volumen.
(los límites de control van de VOL 0 a VOL 50.)

Controles de efecto de sonido

Esta unidad posee tres modos de ecualización programados (CLEAR, BEAT, POP) y el modo LIVE SURROUND. Estos modos pueden ser seleccionados para realzar el tipo de música que está siendo reproducida.

Ecualizador programado (PRESET EQ.)
Cuando ponga en funcionamiento la unidad principal, utilice uno de los botones PRESET EQ. para seleccionar el modo. Presione el mismo botón otra vez para cancelar el modo.

Cuando opera la unidad de control remoto, cada vez que presione el botón PRESET EQ., el modo de ecualización cambia de la siguiente manera:

No sound effect
Sin efecto de sonido → **CLEAR** → **BEAT** → **POP**
Nessun effetto sonoro

VOLUME, TONO ED ALTRI COMANDI

Tasti VOLUME

+ : Utilizzare questo tasto per aumentare il volume.
- : Utilizzare questo tasto per diminuire il volume.
(gamma controllo da VOL 0 a VOL 50.)

Comandi effetti sonori

Questa unità possiede tre modi preimpostati per l'equalizzatore (CLEAR, BEAT, POP) ed il modo LIVE SURROUND. Questi modi possono essere selezionati per potenziare il tipo di musica riprodotto.

Preimpostazioni equalizzatore (PRESET EQ.)
Quando si utilizza l'unità principale, utilizzare uno dei tasti PRESET EQ. per selezionare il modo. Premere nuovamente gli stessi tasti per cancellare tale modo.

Quando si utilizza l'unità di telecomando, ogni volta che il tasto PRESET EQ. viene premuto il modo cambia nel modo seguente:

CLEAR:
Set to this position for crisp and clear sounding music with transparent highs.
BEAT:
Set to this position for music with a heavy beat, such as rock or disco music.
POP:
Set to this position for light music including popular and vocal music.

LIVE SURROUND

Set this button to ON to enjoy impressive sound like that in a concert hall.
- When this button is set to ON, "▲ON" is shown. When this button is pressed again, this mode is released. If the PRESET EQ. mode is selected, the selected mode is engaged.
- LIVE SURROUND is specially effective for stereo sound.

Note:
The selected mode is effective when listening to speaker or headphone sound, not recorded sound.

ACTIVE HYPER-BASS button

ON : The Active Hyper-Bass indicator lights. Set to this position when listening to Active Hyper-Bass sound.
OFF : The Active Hyper-Bass indicator goes out. Set to this position when Active Hyper-Bass sound is not required.

DISPLAY button

Use this button to switch between the function and time display.

CLEAR:
Colóquelo en esta posición para obtener sonidos contrastados y claros con altos transparentes.
BEAT:
Colóquelo en esta posición para músicas con ritmo pesado tales como rock o música de discoteca.
POP:
Colóquelo en esta posición para música suave incluyendo música popular y vocal.

LIVE SURROUND

Coloque este botón en ON para disfrutar de sonidos grandiosos tales como en una sala de conciertos.
- Cuando se coloca este botón en ON aparece "▲ON". Si se lo presiona otra vez, el modo es desactivado. Si selecciona el modo PRESET EQ., se activa el modo seleccionado.
- LIVE SURROUND es especialmente efectivo para sonido estereofónico.

Nota:
El modo seleccionado queda activado cuando se escucha el sonido a través de los altavoces o audífonos, pero no se escuchará en el sonido grabado.

Botón ACTIVE HYPER-BASS

ON : Se enciende el indicador Active Hyper-Bass. Colóquelo en esta posición cuando escucha sonidos Active Hyper-Bass.
OFF : Se apaga el indicador Active Hyper-Bass. Colóquelo en esta posición cuando no desee escuchar Active Hyper-Bass.

Botón DISPLAY

Utilice este botón para conmutar entre las indicaciones de función y de hora.

CLEAR:
Impostare questa posizione per suoni nitidi e cristallini con acuti trasparenti.
BEAT:
Impostare questa posizione per musica ritmata come musica rock o disco.
POP:
Impostare questa posizione per musica leggera o popolare.

LIVE SURROUND
Impostare questo tasto su ON per godere di un suono con caratteristiche come quelle di una sala per concerti.
- *Quando questo tasto viene impostato su "ON", l'indicazione "▲ ON" viene visualizzata.*
  Quando il tasto viene premuto nuovamente, il modo viene abbandonato. Se si seleziona il modo PRESET EQ., tale modo viene attivato.
- *Il modo LIVE SURROUND è particolarmente efficace con suoni stereo.*

Nota:
Il modo selezionato è efficace solo per l'ascolto tramite diffusori o cuffie ed il suo effetto non viene registrato.

Tasto ACTIVE HYPER-BASS

ON : L'indicatore Active Hyper-Bass si illumina. Impostare questa posizione quando si ascolta il suono Active Hyper-Bass.
OFF : L'indicatore Active Hyper-Bass si spegne. Impostare questa posizione quando il suono Active Hyper-Bass non è necessario.

Tasto DISPLAY

Utilizzare questo tasto per la commutazione tra le visualizzazioni della funzione e dell'orario.

CONCERNING COMPACT DISCS

Since dirty, damaged and warped discs may damage the unit, care should be taken of the following:

1. **Usable compact discs**
   Use compact discs with the mark shown.
2. **Notes on handling discs**
   - Do not touch the reflective recorded surface.
   - Do not stick anything to or write anything on the label side.
   - Do not bend compact discs.
3. **Storage**
   - After removing a disc from the unit, be sure to put it back in its case.
   - Do not expose discs to direct sunlight, high temperatures from a heater, etc., high humidity, or dust.
4. **Cleaning discs**
   Before loading a disc, wipe off any dust, dirt or fingerprints with a soft cloth. Discs should be cleaned by wiping radially, from the center to the edge.

- **Never use thinner, benzine, record cleaner or antistatic spray.**

EN CUANTO A LOS COMPACT DISC

Puesto que los discos sucios, alabeados y con defectos pueden dañar la unidad, deben tenerse en cuenta los siguientes puntos:

1. **Compact disc utilizables**
   Utilice compact disc con la siguiente marca.
2. **Notas sobre la manipulación de discos**
   - No toque la superficie grabada reflectante.
   - No pegue ni escriba nada sobre el lado del rótulo.
   - No doble el compact disc.
3. **Almacenamiento**
   - Guarde los discos en sus cajas luego de sacarlos del reproductor.
   - No los exponga a la luz solar directa, altas temperaturas de un calefactor, etc., gran humedad o polvo.
4. **Limpieza de discos**
   Antes de colocar un disco, limpie la superficie de polvo, suciedad e impresiones digitales con un paño suave. El disco debe limpiarse de forma radial, desde el centro hacia el borde.

- **Nunca utilice diluyente, bencina, limpiadores de discos analógicos o pulverizadores antiestáticos.**

INFORMAZIONI SUI CD

Dato che CD sporchi, danneggiati e deformati possono danneggiare l'unità, prestare attenzione a quanto segue:

1. **CD utilizzabili**
   Utilizzare solo CD recanti il marchio indicato.
2. **Note sul maneggio dei CD**
   - *Non toccare la superficie registrata iridescente.*
   - *Non incollare etichette o scrivere sul lato dell'etichetta del CD.*
   - *Non piegare i CD.*
3. **Conservazione**
   - *Dopo aver rimosso un CD dall'unità, accertarsi di riporlo nella sua custodia.*
   - *Non esporre i CD alla luce solare diretta, a temperature elevate, ad umidità elevate o a polvere.*
4. **Pulizia CD**
   Prima di inserire un CD, pulire polvere, sporco o impronte digitali con un panno morbido. I CD devono essere puliti strofinando radialmente, dal centro verso il bordo.

- **Non utilizzare mai diluente, benzina, liquido pulente per dischi o spray antistatici.**

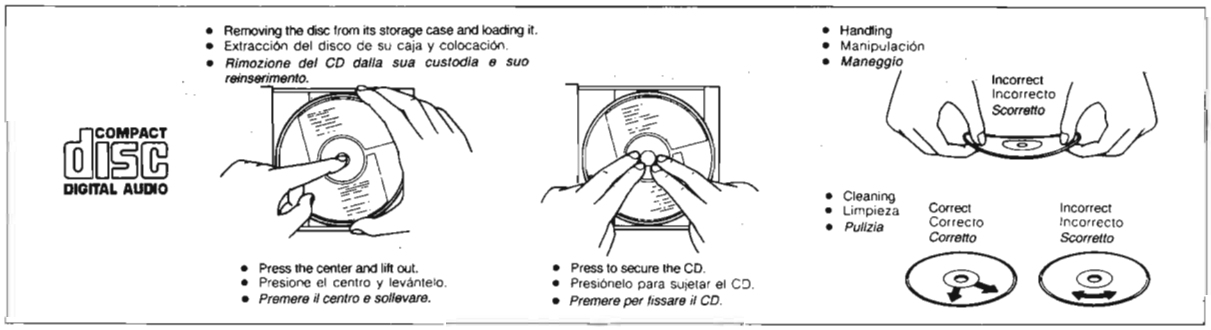

PLAYING COMPACT DISCS

Playing an entire disc ... The following example assumes a compact disc with 12 tunes and a total playing time of 48 minutes 57 seconds.

Operate in the order shown

REPRODUCCION DE COMPACT DISCS

Reproducción de un disco completo... El siguiente ejemplo considera un compact disc con 12 canciones y un tiempo de reproducción total de 48 minutos, 57 segundos.

Proceda en el orden indicado

RIPRODUZIONE DI CD

Riproduzione di un intero CD ... *L'esempio seguente utilizza un CD con 12 brani ed un tempo di riproduzione totale di 48 minuti e 57 secondi.*

Eseguire le operazioni nell'ordine indicato

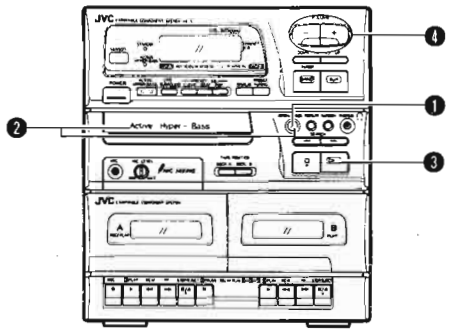

❶ Press to open the CD tray. (The power is switched ON when AC power is supplied.)
- When battery power is used, switch on the POWER button first, then perform operations.

❷ Load a disc with the label side facing up. Press to close the CD tray. (The tray can be closed by pressing the ▷II button.)
❸ Press to start play.
❹ Adjust.

Note:
When the CD tray is closed by pressing the ▷II button, the CD starts playing as soon as the tray is closed.

- 8-cm (3-3/16") compact discs can be used in this unit without an adapter.

❶ Presione para abrir el portadisco de CD. (La energía se conecta ON cuando se suministra CA).
- Cuando se utilizan las pilas, primero presione el botón POWER para luego ejecutar las operaciones.

❷ Coloque un disco con la etiqueta hacia arriba. Presione para cerrar el portadisco de CD. (El portadisco puede ser cerrado presionando el botón ▷II).
❸ Presione para iniciar la reproducción.
❹ Ajuste.

Nota:
Cuando se cierra el portadisco de CD presionando el botón ▷II, la reproducción del CD se inicia en el momento que el portadisco se cierra.

- Con esta unidad es posible utilizar compact disc de 8-cm sin necesidad de adaptador.

❶ *Premere il tasto per l'apertura del piatto del CD. (L'alimentazione viene attivata quando viene fornita un'alimentazione CA).*
- *Quando si utilizzano le batterie, attivare prima l'alimentazione col tasto POWER e quindi eseguire le operazioni.*

❷ *Inserire un CD con l'etichetta rivolta in alto. Chiudere il piatto del CD. (Il piatto può essere chiuso premendo il tasto ▷II).*
❸ *Premere il tasto per avviare la riproduzione.*
❹ *Regolare.*

Nota:
Se il piatto porta CD viene chiuso premendo il tasto ▷II il CD viene riprodotto non appena il piatto porta CD si richiude.

- *La riproduzione di CD da 8 cm non richiede l'uso di alcun adattatore.*

To stop play

- **To stop in the middle of a disc**
  During playback, press the □ button to stop play.

Para detener la reproducción

- **Para detenerla en la mitad de un disco**
  Presione el botón □ para detener la reproducción.

Per interrompere la riproduzione

- **Per l'interruzione nel mezzo di un CD**
  Premere il tasto □ per interrompere la riproduzione nel mezzo.

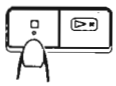

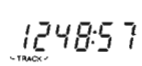

- The total number of tracks (tunes) and total playing time are displayed.
- Se visualiza el número total de pistas (canciones) y el tiempo total de reproducción.
- *Viene visualizzato il numero totale dei brani ed il tempo totale di riproduzione.*

- **To stop a disc temporarily**
  Press the ▷II button to stop play temporarily and the playing time blinks. When pressed again, play resumes from the point where it was paused.

Notes:
- The following indication may be shown when a disc is dirty or scratched, or when the disc is loaded upside down.
  In such a case, check the disc and insert again after cleaning the disc or turning it over.

- **Para detener temporariamente un disco**
  Presione el botón ▷II para detener el disco temporariamente; el tiempo de reproducción parpadeará. Cuando se lo presiona otra vez, se reinicia la reproducción en el punto donde fue detenida.

Notas:
- La siguiente indicación puede aparecer cuando el disco está sucio o rayado, o puesto al revés. En tal caso, verifique el disco e insértelo nuevamente después de haberlo limpiado o invertido.

- **Interruzione temporanea della riproduzione**
  Premere il tasto ▷II e la pausa inizia, facendo lampeggiare il tempo di riproduzione sul display. Premendo il tasto un'altra volta, la riproduzione riprende dal punto in cui era stata interrotta.

Note:
- *L'indicazione seguente potrebbe apparire quando un CD è sporco o graffiato oppure quando il CD viene inserito rovescio.*
  In tali casi, controllare il CD e quindi reinserirlo dopo averlo pulito o voltato.

- When a CD is not loaded in the tray, "OPEN" is displayed and the CD tray opens when the ▷II button is pressed.
- **Do not use the unit at excessive high or low temperatures. The recommended temperature range is from 5°C (41°F) to 35°C (95°F).**
- After playback, unload the disc and close the CD tray.
- If mistracking occurs during play, lower the volume.
- Mistracking may occur if a strong shock is applied to the unit or if it is used in a place subject to vibrations (i.e. in a car travelling on a rough road).

- Si no se ha colocado un CD en el portadisco, aparece la indicación "OPEN" y el portadisco de CD se abre si se presiona el botón ▷II.
- **No utilice esta unidad en lugares con temperaturas excesivamente altas o bajas. El margen de temperatura recomendado es de 5°C a 35°C.**
- Después de la reproducción, retire el disco y cierre el portadisco del CD.
- Si ocurriese una falla de seguimiento de pista durante la reproducción, reduzca el volumen.
- El mal seguimiento puede producirse si la unidad recibe un fuerte golpe o se utiliza en un lugar sometido a vibraciones (por ej. en un automóvil que circula por un camino irregular).

- *Quando un CD non è stato inserito sul piatto, l'indicazione "OPEN" viene visualizzata ed il piatto del CD si apre quando viene premuto il tasto ▷II.*
- **Non utilizzare l'unità con temperature eccessivamente elevate o basse. La gamma raccomandata va dai 5°C ai 35°C.**
- *Dopo la riproduzione, togliere il CD e chiudere il piatto del CD.*
- *Se la lettura del CD fosse scorretta durante la riproduzione, abbassare il volume.*
- *La lettura del CD potrebbe saltare se l'unità viene urtata o se essa viene utilizzata in un luogo soggetto a vibrazioni (ad esempio in auto su fondi stradali accidentati).*

Skip playback

- During playback, it is possible to skip forward to the beginning of the next tune or back to the beginning of the tune being played or the previous tune; when the beginning of the required tune has been located, play starts automatically.

To listen to the next tune ...
Press the ►►I button once to skip to the beginning of the next tune.

To listen to the previous tune ...
Press the I◄◄ button to skip to the beginning of the tune being played back and press again to skip to the beginning of the previous tune.

Reproducción por salto

- Durante la reproducción, es posible saltar al comienzo de la próxima canción o retroceder al comienzo de la canción que se está reproduciendo o de la canción previa; una vez localizado el comienzo de la canción deseada, la reproducción comienza automáticamente.

Para escuchar la próxima canción...
Presione el botón ►►I una vez para saltar al comienzo de la próxima canción.

Para escuchar la canción previa ...
Presione el botón I◄◄ para saltar al comienzo de la canción que se está reproduciendo y presiónelo nuevamente para saltar al comienzo de la canción previa.

Riproduzione con salto

- *Durante la riproduzione è possibile saltare all'inizio del brano successivo oppure all'inizio del brano in corso di riproduzione o di un brano precedente; la riproduzione inizia automaticamente quando l'inizio del brano desiderato viene raggiunto.*

Per ascoltare il brano successivo ...
Premere una volta il tasto ►►I per saltare all'inizio del brano successivo.

Per ascoltare il brano precedente ...
Premere il tasto I◄◄ per saltare all'inizio del brano in corso di riproduzione e premere nuovamente per saltare all'inizio del brano precedente.

Search playback (to locate the required position on the disc)

- The required position can be located using fast-forward or reverse search while playing a disc.

Búsqueda por reproducción (para ubicar la posición deseada en el disco)

- La posición deseada puede ubicarse utilizando la búsqueda progresiva o regresiva rápida durante la reproducción del disco.

Riproduzione con ricerca (per localizzare una determinata posizione sul CD)

- *La posizione desiderata può essere localizzata utilizzando la ricerca rapida in avanti o all'indietro durante la riproduzione di un CD.*

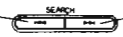

Keep pressing for fast-reverse search.
Mantenga presionado para la búsqueda regresiva rápida.
Tenere premuto per la ricerca rapida all'indietro.

Keep pressing for fast-forward search.
Mantenga presionado para la búsqueda progresiva rápida.
Tenere premuto per la ricerca rapida in avanti.

- Hold down the button; search play starts slowly and then gradually increases in speed.
- Since low-volume sound (at about one quarter of the normal level) can be heard in the search mode, monitor the sound and release the button when the required position is located.

- Mantenga presionado el botón; se iniciará lentamente la reproducción, aumentando posteriormente su velocidad en forma gradual.
- Puesto que se puede escuchar un sonido muy bajo (aproximadamente un cuarto del nivel normal) en el modo de búsqueda, monitoriee el sonido y suelte el botón cuando localice la posición deseada.

- *Tenere premuto il tasto; la riproduzione con ricerca inizia lentamente e quindi aumenta gradualmente di velocità.*
- *Dato che il suono può essere udito a basso volume (circa un quarto del livello normale) nel modo di ricerca, ascoltare e rilasciare il tasto quando la posizione desiderata viene raggiunta.*

Direct access playback (using the remote control unit)

- Pressing any of the track number buttons will start play from the beginning of the designated tune, without your having to press the CD ►/II button. (This function cannot be used during programmed play.)

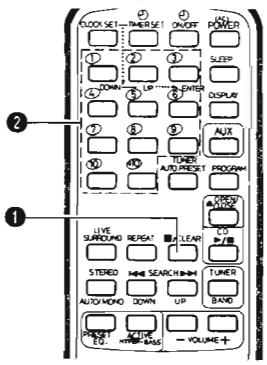

❶ Press the ■/CLEAR button to set to the CD mode.
❷ Designate the required tune using the track number buttons.
- To designate tune numbers 1 to 10, press the track number button corresponding to the tune (track) number.
- To designate tune number 11 or higher, press the +10 button the required number of times, then the track number button. (Example: To designate the 20th tune, press the +10 button once, then press track number button 10.)

* +10 button:
Each time this button is pressed, the number increases by 10. First press this button to set the 10's digit, then press the track number button to set the 1's digit.

- **To skip to another tune during play**
When the required track number button is pressed, the display shows the designated track number and play starts from the beginning of the designated tune.

Reproducción por acceso directo (utilizando la unidad de control remoto)

- Presionando cualquier botón de número de pista se iniciará la reproducción desde el comienzo de la canción designada, sin tener que pulsar el botón CD ►/II. (Esta función no puede emplearse durante la reproducción programada.)

❶ Presione el botón ■/CLEAR para establecer el modo CD.
❷ Seleccione la canción deseada usando los botones de número de pista.
- Para seleccionar los números de canciones 1 al 10, presione el botón del número de pista correspondiente al número de la canción (pista).
- Para seleccionar el número de canción del 11 en adelante, presione el botón +10 el número de veces necesario y luego un botón de número de pista. (Ejemplo: Para seleccionar la canción No. 20, presione el botón +10 una vez, luego presione el botón 10 de número de pista.)

* Botón +10:
Cada vez que se presiona este botón, el número aumenta en incrementos de 10. Púlselo primero para fijar el dígito de las decenas y luego presione el botón de número de pista para fijar el dígito de las unidades.

- **Para saltar a otra canción durante la reproducción**
Cuando se presiona el botón de número de pista deseado, el indicador muestra el número de pista designado y comienza la reproducción desde el comienzo de la canción seleccionada.

Riproduzione ad accesso diretto (col telecomando)

- *La pressione di uno qualsiasi dei tasti del numero del brano avvia la riproduzione dall'inizio del brano designato senza dover premere il tasto ►/II. (Questa funzione non può essere utilizzata durante la riproduzione programmata).*

❶ *Premere il tasto ■/CLEAR per impostare il modo del lettore CD.*
❷ *Designare il brano desiderato utilizzando i tasti dei numeri di brano.*
- *Per designare i numeri di brano da 1 a 10, premere il tasto numerico corrispondente al numero del brano.*
- *Per designare il numero 11 o un numero maggiore, premere il tasto +10 per il numero di volte necessario e quindi un tasto numerico. (Esempio: Per indicare il 20° brano, premere una volta il tasto +10 e quindi il tasto di numero di brano 10.).*

* *Tasto +10:*
Ogni volta che questo tasto viene premuto, il numero aumenta di 10. Premere questo tasto per impostare le decine e quindi premere un tasto numerico per impostare le unità.

- **Per saltare ad un altro brano durante la riproduzione**
Quando il tasto del numero di brano desiderato viene premuto, il display indica il numero di brano designato e la riproduzione inizia da tale brano.

Programmed play (using the remote control unit)

- Up to 20 tunes can be programmed to be played in any required order.
  The total playing time of programmed tunes is displayed (up to 99 minutes, 59 seconds).
  (Example: When programming the 2nd tune to be played first, the 6th tune next, and then the 12th tune, etc.)

Reproducción programada (utilizando la unidad de control remoto)

- Puede programarse la reproducción de hasta 20 canciones en cualquier orden deseado.
  Se visualiza el tiempo total de reproducción de las canciones programadas (hasta 99 minutos, 59 segundos).
  (Ejemplo: Cuando programe la reproducción de la 2ª canción, la 6ª canción, la 12ª canción, etc.,en dicho orden.)

Riproduzione programmata (con telecomando)

- *Fino a 20 brani possono essere programmati per essere riprodotti in qualsiasi ordine desiderato.*
  Il tempo totale di riproduzione dei brani programmati viene visualizzato (fino a 99 minuti e 59 secondi).
  (Esempio: quando si programma per riprodurre per primo il brano numero 2, per secondo il brano numero 6, per terzo il brano numero 12, ecc.).

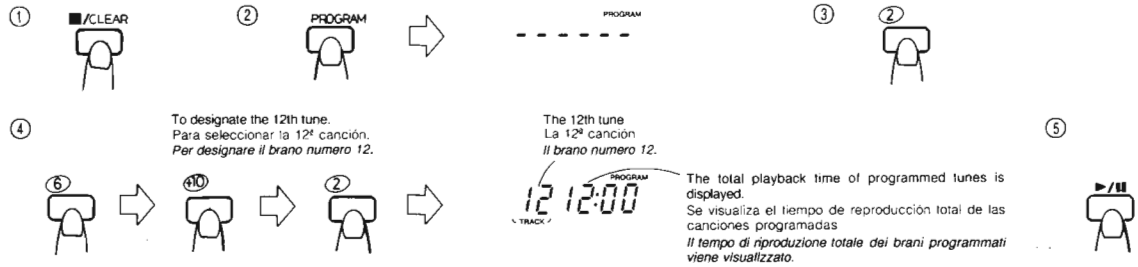

① Press the ■/CLEAR button.
② Press the PROGRAM button to set to the programming mode.
③ Press to designate the required track number.
④ Designate the remaining tunes by pressing the track number buttons.
⑤ Press the ►/II button when programming is completed. Programmed playback starts.

To confirm the details of a program...
Press the PROGRAM button; the tunes making up the program will be displayed in programmed order.

① Presione el botón ■/CLEAR.
② Pulse el botón PROGRAM para establecer el modo de programación.
③ Presione para designar el número de pista deseada.
④ Seleccione las canciones restantes presionando los botones de número de pista.
⑤ Presione el botón ►/II cuando finalice la programación. Se iniciará la reproducción programada.

Para confirmar el contenido de una programación ...
Al pulsar el botón PROGRAM; se visualizan las canciones que conforman el programa en el orden programado.

① *Premere il tasto ■/CLEAR.*
② *Per impostare il modo di programmazione, premere il tasto PROGRAM.*
③ *Designare il numero di brano desiderato con i tasti numerici.*
④ *Designare gli altri brani con i tasti numerici.*
⑤ *Premere il tasto ►/II quando la programmazione è completata.*

Per controllare i dettagli di un programma ...
Premere il tasto PROGRAM; i brani programmati vengono visualizzati nell'ordine programmato.

To clear the programmed tunes ...
Press the ■/CLEAR button before playing a disc. During programmed playback, press this button twice. When the CD tray is opened, programmed tunes are cleared automatically.

Notes:
1. If the total playing time of the programmed tunes exceeds 99 minutes 59 seconds, the total playing time indication will go out. In this case, cancel the program and program the tracks (tunes) again.
2. Programming of track (tune) number 21 or more is impossible.
3. When performing CD synchro recording or timer playback in "Programmed play" order, step ⑤ above is not required.

Para anular las canciones programadas...
Presione el botón ■/CLEAR antes de reproducir un disco. Durante la reproducción programada, presione este botón dos veces. Al abrirse el portadisco del CD, se cancelan automáticamente las canciones programadas.

Notas:
1. Si el tiempo total de reproducción de las canciones programadas excede 99 minutos, 59 segundos, se apaga la indicación de tiempo total de reproducción. En este caso cancele el programa y programe las pistas (músicas) otra vez.
2. Es imposible programar la pista No. 21 o más.
3. El paso ⑤ de arriba no es necesario cuando se ejecuta una grabación sincronizada de CD o una reproducción por temporizador en "reproducción programada".

Per cancellare i brani programmati ...
Premere il tasto ■/CLEAR prima di riprodurre il CD. Durante la riproduzione programmata, premere questo tasto due volte. Quando il piatto del CD viene aperto, i brani programmati vengono cancellati automaticamente.

Note:
1. *Se la durata dei brani programmati per la riproduzione supera i 99 minuti e 59 secondi, l'indicazione della durata della riproduzione scompare dal display. In tal caso, cancellare il programma e rifarlo da capo.*
2. *La programmazione di 21 brani o più è impossibile.*
3. *Durante la registrazione sincronizzata di CD o via timer eseguita nel modo visto nella sezione sulla riproduzione programmata, la fase ⑤ non è necessaria.*

Repeat play

Press the REPEAT button before or during play. A single tune or all the tunes can be repeated.

Whether a single tune or all tunes are to be repeated can be specified. Each time the REPEAT button is pressed, the mode will change from a single tune (⊊), to all the tunes (⊊ ALL), to the clear mode, in this order.

Reproducción repetida

Pulse el botón REPEAT antes o durante la reproducción. Puede repetirse una sola canción o todas las canciones.

Puede especificarse la repetición de una canción o todas las canciones. Cada vez que pulse el botón REPEAT, cambiará el modo de una sola canción (⊊) a todas las canciones (⊊ ALL), a modo de cancelación, en este orden.

Riproduzione ripetuta

Premere il tasto REPEAT prima o durante l'esecuzione. La riproduzione ripetuta può essere eseguita per un brano singolo oppure per tutti i brani.

E' possibile specificare se si desidera la riproduzione ripetuta di un singolo brano oppure di tutti i brani. Ogni volta che il tasto REPEAT viene premuto, il modo cambia dal modo di ripetizione di un brano (⊊), al modo di ripetizione di tutti i brani (⊊ ALL) al modo di cancellazione della riproduzione ripetuta, nell'ordine.

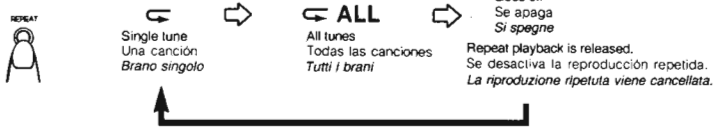

- **Repeat play of a single tune (⊊)**
  The tune being played back will be heard repeatedly.
- **Repeat play of all tunes (⊊ ALL)**
  When playing back an entire disc or programmed tunes, all tunes or the programmed tunes will be heard repeatedly.

- **Reproducción repetida de una sola canción (⊊)**
  La canción reproducida puede escucharse repetidamente.
- **Reproducción repetida de todas las canciones (⊊ ALL)**
  Cuando se reproduce el disco completo o las canciones programadas, pueden escucharse repetidamente todas las canciones o las programadas.

- **Riproduzione ripetuta di un singolo brano (⊊)**
  Il brano in corso di riproduzione viene riprodotto ripetutamente.
- **Riproduzione ripetuta di tutti i brani (⊊ ALL)**
  Quando si riproduce un intero CD oppure un gruppo di brani programmati, tutti i brani oppure i soli brani programmati vengono riprodotti ripetutamente.

Random play (⊂ ALL RANDOM)

Press the RANDOM button to play all tunes repeatedly on a disc, in random order.

Reproducción aleatoria (⊂ ALL RANDOM)

Presione el botón RANDOM para reproducir repetidamente todas las músicas de un disco en forma aleatoria.

Riproduzione casuale (⊂ ALL RANDOM)

Premere il tasto RANDOM per riprodurre ripetutamente tutti i brani del CD in un ordine casuale.

CASSETTE TAPE

Cassette tape

1. Loose tape may cause trouble. With a pencil, gently tighten the tape as shown.
2. To prevent recordings from being erased accidentally, remove the tab(s) with a screwdriver. Reseal the slots with adhesive tape to erase and re-record after the tabs have been broken off.

Cassette loading

1. Press the STOP/EJECT (■/▲) button to open the cassette holder.
2. Load a cassette as shown.
3. Close the cassette holder by pressing it gently. Listen for the click that tells you that you've closed the holder securely.

CASSETTE

Cassette

1. Una cinta floja puede causar fallas. Ajústela cuidadosamente con un lápiz, etc, como se muestra en la ilustración.
2. Para prevenir el borrado accidental de una grabación, extraiga la(s) lengüeta(s) con un destornillador. Cubra los orificios con cinta adhesiva para borrar y regrabar después de haber sacado las lengüetas.

Colocación de un cassette

1. Presione el botón STOP/EJECT (■/▲) para abrir el portacassette.
2. Coloque un cassette tal como se muestra.
3. Cierre el portacassette presionándolo suavemente. Escuchará un "clic" indicando que el portacassette se ha cerrado correctamente.

NASTRI A CASSETTA

Nastri a cassetta

1. *Un nastro allentato può causare problemi. Stringere leggermente il nastro con una matita o un oggetto simile, come indicato.*
2. *Per prevenire l'accidentale cancellazione della registrazione, rimuovere le linguette di protezione con un cacciavite o un oggetto simile. Chiudere i fori con nastro adesivo per cancellare e registrare dopo che le linguette sono state rimosse.*

Inserimento della cassetta

1. *Premere il tasto STOP/EJECT (■/▲) per aprire il vano della cassetta.*
2. *Inserire una cassetta come indicato.*
3. *Chiudere il vano della cassetta premendo leggermente su di esso. Controllare che vi sia uno scatto che indica che il vano è ben chiuso.*

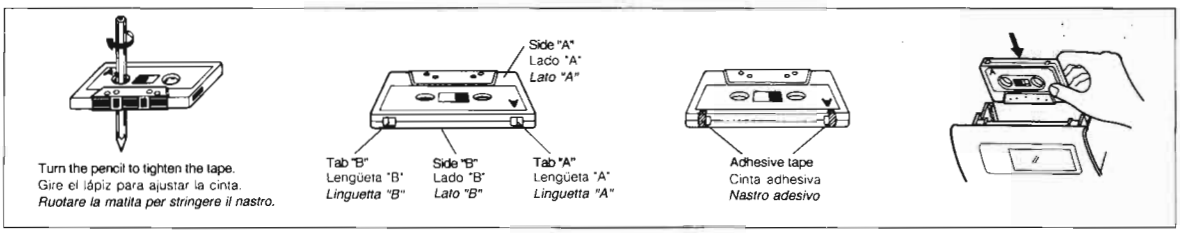

CASSETTE PLAYBACK

(The example shows Deck A)

Operate in the order shown

❶ Load a cassette tape in Deck A.
❷ Press to start playback. (The power is switched on, TAPE mode is engaged and tape playback starts.)
- When battery power is used, switch on the POWER button first, then perform operations.

❸ Set the TAPE POSITION button as required. (See page 16.)
❹ Adjust.

- **Playback in Deck B**
  The previous procedures ❷ through ❹ also apply to Deck B when a cassette is loaded in Deck B. (Set the TAPE POSITION (DECK B) button as required.) When Decks A and B are simultaneously set to the play mode, only the playback sound of Deck B is heard.

Notes:

1. When the power is turned off while the tape is still running, cassette operation buttons which are depressed do not return to the original positions. Press the ■/▲ STOP/EJECT button to stop the tape running before turning off the power.
2. When the ► PLAY button of deck is pressed, the function cannot be switched over.

REPRODUCCION DE CASSETTES

(El ejemplo muestra la platina A)

Proceda en el orden indicado

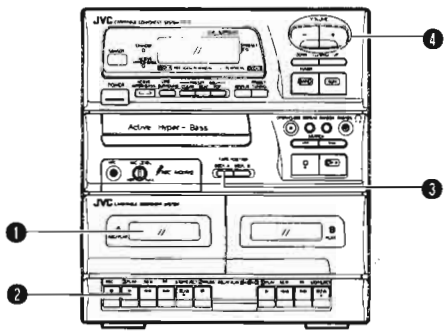

❶ Coloque el cassette de cinta en la platina A.
❷ Presione para iniciar la reproducción. (La alimentación se conecta, se activa el modo TAPE y se inicia la reproducción).
- Cuando se utilizan las pilas, primero presione el botón POWER y luego ejecute las operaciones.

❸ Coloque el botón TAPE POSITION como sea necesario (ver página 16).
❹ Ajuste.

- **Reproducción en la platina B**
  Los pasos previos ❷ y ❹ también son aplicables a la platina B cuando se coloca un cassette en la misma. (Coloque el botón TAPE POSITION (DECK B) como sea necesario). Cuando se ajustan simultáneamente ambas platinas A y B en el modo de reproducción, sólo se escucha el cassette de la platina B.

Notas:

1. Cuando se apaga la unidad mientras está en movimiento una cinta, los botones de operación del cassette presionados no vuelven a sus posiciones originales. Presione el botón ■/▲ STOP/EJECT para detener la cinta antes de apagar la unidad.
2. Si presiona el botón ► PLAY de la platina, la función no podrá ser conmutada.

RIPRODUZIONE DI CASSETTE

(L'esempio mostra la piastra A)

Eseguire le operazioni nell'ordine indicato

❶ *Inserire una cassetta nella piastra A.*
❷ *Premere il tasto per l'avvio della riproduzione. (L'alimentazione viene attivata, l'unità entra nel modo TAPE e la riproduzione del nastro inizia).*
- *Quando si utilizzano le batterie, premere prima il tasto POWER e quindi eseguire le operazioni.*

❸ *Impostare il tasto TAPE POSITION come necessario. (Vedi pag. 16).*
❹ *Regolare.*

- **Riproduzione sulla piastra B**
  Le procedure da ❷ a ❹ sopraindicate sono valide anche per la piastra B quando un nastro è stato inserito. (Impostare il tasto TAPE POSITION (DECK B) come necessario.) Quando le piastre A e B vengono portate contemporaneamente nel modo di riproduzione sarà possibile udire solo il suono della piastra B.

Note:

1. *Quando l'alimentazione viene disattivata mentre il nastro sta scorrendo, i tasti di funzionamento del registratore che sono stati premuti non ritornano nella loro posizione originale. Premere il tasto ■/▲ STOP/EJECT per interrompere lo scorrimento del nastro prima di disattivare l'alimentazione.*
2. *Quando il tasto ► PLAY della piastra viene premuto, la funzione non può essere commutata.*

RELAY PLAYBACK

(From Deck B to Deck A)
Operate in the order shown

❶ Load a cassette tape in Deck B.
❷ Load a cassette tape in Deck A.
❸ Press the ► PLAY button on Deck B.
❹ Set Deck A to the play-pause mode.
❺ Set the TAPE POSITION (DECK A and B) buttons as required. (See page 16.)

* When Deck B stops, Deck A's pause mode will be released and it will start playback. When Deck A stops automatically, relay playback will be released.

Note:
- When battery power is used, switch on the POWER button first, then perform operations.

REPRODUCCION POR RELEVO

(De la platina B a la platina A)
Proceda en el orden indicado

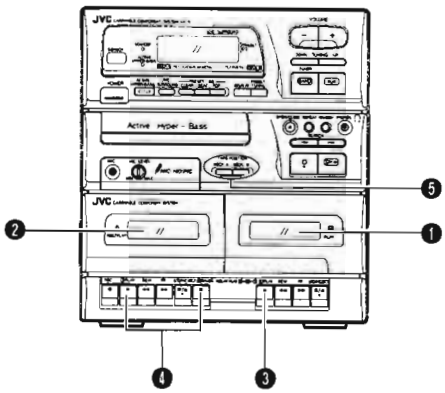

❶ Coloque un cassette en la platina B.
❷ Coloque un cassette en la platina A.
❸ Presione el botón ► PLAY de la platina B.
❹ Coloque la platina A en el modo de pausa de reproducción.
❺ Coloque los botones TAPE POSITION (DECK A y B) como sea necesario. (Ver página 16).

* Cuando se detenga la platina B, se liberará el modo de pausa de la platina A y comenzará la reproducción. Cuando se detenga automáticamente la platina A, se liberará la reproducción por relevo.

Nota:
- Cuando se utilizan las pilas, primero presione el botón POWER y luego ejecute las operaciones.

RIPRODUZIONE ALTERNATA

(Dalla piastra B alla piastra A)
Eseguire le operazioni nell'ordine indicato

❶ *Inserire una cassetta nella piastra B.*
❷ *Inserire una cassetta nella piastra A.*
❸ *Premere il tasto ► PLAY della piastra B.*
❹ *Portare la piastra A nel modo di pausa della riproduzione.*
❺ *Impostare i tasti TAPE POSITION (DECK A e B) come necessario. (Vedi pag. 16).*

* *Quando la piastra B si ferma, la piastra A abbandona il modo di pausa ed inizia la riproduzione. Quando la piastra A si ferma, la riproduzione alternata viene cancellata.*

Nota:
- *Quando si utilizzano le batterie, premere prima il tasto POWER e quindi eseguire le operazioni.*

RADIO RECEPTION

Operate in the order shown

❶ Press the TUNER/BAND button.
- The power is switched on and a band and radio frequency will be shown in the display.
- When battery power is used, switch on the POWER button first, then perform operations.

❷ Select the band (FM or AM (MW/LW)).
❸ Tune to the required station.

STEREO AUTO/MONO button

Auto mode:
Set to this position when listening to or recording an FM stereo broadcast. The STEREO indicator lights when the FM stereo broadcast is received.

MONO:
Set to this position when FM stereo reception is noisy. When another station is tuned to in mono mode, the unit automatically enters Auto mode.

RADIORRECEPCION

Proceda en el orden indicado

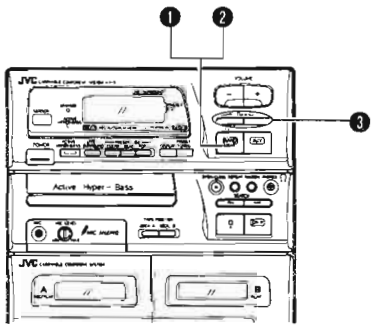

❶ Presione el botón TUNER/BAND.
- Se conectará la alimentación; la banda y frecuencia de radio serán mostradas en la indicación.
- Cuando se utilizan las pilas, primero presione el botón POWER y luego ejecute las operaciones.

❷ Seleccione la banda (FM o AM (OM/OL)).
❸ Sintonice la estación deseada.

Botón STEREO AUTO/MONO

Modo auto:
Ajuste en esta posición cuando escuche o grabe una radioemisión estereofónica por FM. Se enciende el indicador STEREO cuando se recibe una radioemisión estereofónica.

MONO:
Colóquelo en esta posición cuando la recepción estereofónica de FM tenga ruido. Si se sintoniza otra estación en el modo monofónico, la unidad ingresa automáticamente en el modo automático.

RICEZIONE CON LA RADIO

Eseguire le operazioni nell'ordine indicato

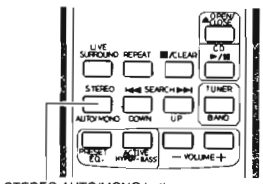

STEREO AUTO/MONO button
Botón STEREO AUTO/MONO
Tasto STEREO AUTO/MONO

❶ *Premere il tasto TUNER/BAND*
- *Il sistema si accende e sul display viene visualizzata la banda e la frequenza.*
- *Quando si utilizzano le batterie, premere prima il tasto POWER e quindi eseguire le operazioni.*

❷ *Selezionare la banda (FM o AM (MW/LW)).*
❸ *Sintonizzare la stazione desiderata.*

Tasto STEREO AUTO/MONO

Modo automatico:
Impostare questa posizione quando si ascolta o si registra una trasmissione FM stereo. L'indicatore del modo STEREO si accende quando la trasmissione ricevuta è in stereo.

MONO:
Impostare questa posizione quando la ricezione FM stereo è disturbata. Quando, nel modo mono, viene sintonizzata un'altra stazione, l'unità entra automaticamente nel modo automatico.

- **Seek tuning**
  Press the UP or DOWN button for one second or more; the unit enters the seek tuning mode and tunes to higher or lower frequencies, and when the broadcast is received, it stops tuning automatically and the broadcast can be heard.
  In AM operation, the frequency moves continuously from the MW to the LW band and vice versa.

- **Manual tuning**
  Each time the UP or DOWN button is pressed, the unit steps through the current frequency band. Tuning is in steps of 50 kHz for FM and 9 kHz for AM (MW/LW).
  In AM operation, the frequency moves continuously from the MW (522 - 1,629 kHz) to the LW (144 - 288 kHz) band and vice versa.

- **Sintonización por búsqueda**
  Presionando el botón UP o DOWN por más de 1 segundo, la unidad se establece en el modo de sintonización por búsqueda sintonizando las frecuencias más altas o más bajas; cuando recibe una radiodifusión, detiene automáticamente la sintonización y se escucha la radiodifusión.
  En AM, la frecuencia se mueve continuamente de la banda de OM a la banda de OL y viceversa.

- **Sintonización manual**
  Cada vez que presiona el botón UP o DOWN, la unidad avanza a través de la banda actual de frecuencias. La sintonización se realiza en pasos de 50 kHz para FM y de 9 kHz para AM (OM/OL).
  En AM, la frecuencia se mueve continuamente de la banda de OM (522 – 1.629 kHz) a la banda de OL (144 – 288 kHz) y viceversa.

- **Sintonizzazione con ricerca**
  Premere il tasto UP o DOWN per un secondo o più; l'unità entra nel modo di sintonizzazione con ricerca sintonizzando rispettivamente le stazioni verso l'alto o verso il basso e, quando una trasmissione viene ricevuta, essa interrompe automaticamente la ricerca e la trasmissione sintonizzata può essere ascoltata.
  Durante il funzionamento nella banda AM, la frequenza si sposta continuamente dalla banda MW alla banda LW e viceversa.

- **Sintonizzazione manuale**
  Ogni volta che il tasto UP o DOWN viene premuto, l'unità si sposta lungo la banda di frequenza correntemente selezionata. La sintonizzazione viene eseguita in passi da 50 kHz per la banda FM ed in passi da 9 kHz per la banda AM (MW/LW).
  Durante il funzionamento nella banda AM, la frequenza si sposta continuamente dalla banda MW (522 – 1629 kHz) alla banda (144 – 288 kHz) LW e viceversa.

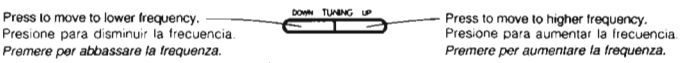

Notes:
- When seek tuning to the required station is not possible because it is broadcasting too weak a signal, press the UP or DOWN button momentarily to perform manual tuning.
- When the power is set to STANDBY, or another mode (TAPE or CD) is selected, the last tuned frequency is stored in memory. When the power is switched on again and TUNER/BAND button is pressed, the same station will be heard.

Notas:
- Cuando no pueda sintonizar la estación deseada con este método debido a que la señal de difusión es muy débil, presione el botón UP o DOWN temporariamente para realizar una sintonización manual.
- Cuando la unidad está en el modo STANDBY, o se ha seleccionado otro modo (TAPE o CD), la última frecuencia sintonizada es almacenada en memoria. Al encender nuevamente la unidad y presionar el botón TUNER/BAND, se escuchará la misma estación.

Note:
- *Quando la sintonizzazione con ricerca della stazione desiderata non è possibile in quanto il segnale trasmesso è troppo debole, premere leggermente il tasto UP o DOWN per eseguire la sintonizzazione manuale.*
- *Quando l'alimentazione si trova nel modo di STANDBY, oppure quando viene selezionato un altro modo (TAPE o CD), l'ultima frequenza sintonizzata viene memorizzata. Quando l'alimentazione viene riattivata ed il tasto TUNER/BAND viene premuto, sarà possibile ascoltare la stessa stazione.*

Auto preset tuning (using the remote control unit)

This function scans the current band (FM or AM (MW/LW)), detecting frequencies used to broadcast signals, and stores the first 15 frequencies in memory automatically.
- Press the TUNER AUTO PRESET button. The frequencies of stations broadcasting signals can be preset automatically in the order of increasing frequency (15 stations in each band (FM and AM (MW/LW))).

Presintonización automática (utilizando la unidad de control remoto)

Esta función explora la banda actual (FM o AM (OM/OL)), detectando las frecuencias utilizadas para emitir señales y almacena automáticamente las primeras 15 frecuencias en memoria.
- Presione el botón TUNER AUTO PRESET. Las frecuencias de las estaciones que difunden señales pueden preajustarse automáticamente en el orden de frecuencias ascendentes. (15 estaciones en cada banda (FM y AM (OM/OL))).

Sintonizzazione con preselezione automatica

Questa funzione esegue la ricerca nella banda utilizzata (FM o AM (MW/LW)) rilevando le frequenze utilizzate per le trasmissioni e quindi memorizza automaticamente le prime 15 frequenze.
- *Premere il tasto TUNER AUTO PRESET. Le frequenze delle stazioni possono essere preselezionate automaticamente nell'ordine di aumento della frequenza. (15 stazioni per ciascuna banda (FM ed AM (MW/LW))).*

Presetting stations (using the remote control unit)

15 stations in each band (FM and AM (MW/LW)) can be preset as follows:
- Example (when presetting an FM station broadcasting at 103.5 MHz to preset button "15")

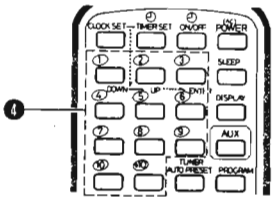

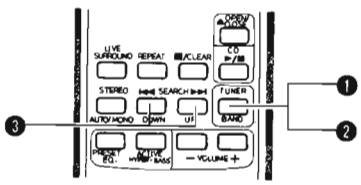

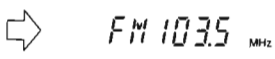

❶ Press the TUNER/BAND button.
❷ Select the FM band using the TUNER/BAND button.
❸ Tune to the required station.
❹ Press preset button "+10", then "5" for more than 2 sec. (When "15" blinks in the preset station display, the station has been preset.)

- Repeat the above procedure for each of the other stations, using a different preset button each time.
- Repeat the above procedure for the AM (MW/LW) bands.

- **To change preset stations**
  Perform step ❹ above after tuning to the required station.

Notes:
- The previous preset station is erased when a new station is set as the new station's frequency replaces the previous frequency in memory.
- When listening to an AM (MW/LW) broadcast, noise may be heard if the remote control is used.

Presintonización de estaciones (utilizando la unidad de control remoto)

Pueden presintonizarse 15 estaciones en cada banda (FM y AM (OM/OL)) del siguiente modo:
- Ejemplo: (cuando preajuste una radioemisora de FM difundiendo a 103,5 MHz en el botón de estación presintonizada "15")

❶ Presione el botón TUNER/BAND.
❷ Seleccione la banda de FM utilizando el botón TUNER/BAND.
❸ Sintonice la estación deseada.
❹ Presione el botón de estación presintonizada "+10", y "5" por más de 2 seg. (Cuando destelle "15" en el indicador de estación presintonizada, la estación ha quedado presintonizada.)

- Repita el procedimiento mencionado para las demás estaciones, utilizando un botón de estación presintonizada diferente cada vez.
- Repita el procedimiento de arriba para la banda AM (OM/OL).

- **Para cambiar las estaciones presintonizadas**
  Realice el paso ❹ mencionado después de sintonizar la estación deseada.

Notas:
- Se borrará la estación previa cuando se presintonice una nueva estación ya que la nueva frecuencia reemplaza a la previa en la memoria.
- Cuando sintonice una radiodifusión de AM (OM/OL) con el control remoto, es posible que escuche ruido.

Preselezione delle stazioni (col telecomando)

15 stazioni per ciascuna banda (FM ed AM (MW/LW)) possono essere preselezionate nel modo seguente:

- *Esempio (per preselezionare una stazione FM che trasmette sui 103,5 MHz nel tasto di preselezione numero "15").*

❶ Premere il tasto TUNER/BAND.
❷ Selezionare la banda FM utilizzando il tasto TUNER/BAND.
❸ Sintonizzare la stazione desiderata.
❹ Premere il tasto di preselezione "+10" e quindi "5" per più di 2 secondi. (Quando l'indicazione "15" lampeggia sul display delle stazioni preselezionate, la stazione è stata preselezionata).

- *Ripetere la procedura sopraindicata per ciascuna stazione desiderata utilizzando ogni volta un tasto di preselezione diverso.*
- *Ripetere la procedura sopraindicata per la banda AM (MW/LW).*

- **Per cambiare le stazioni preselezionate**
  Eseguire la fase ❹ dopo aver sintonizzato la nuova stazione desiderata.

Note:
- *La stazione preselezionata precedente viene cancellata quando viene preselezionata una nuova stazione in quanto la frequenza della nuova stazione sostituisce quella vecchia in memoria.*
- *Quando si ascolta una trasmissione AM (MW/LW) si possono udire dei disturbi se viene utilizzato il telecomando.*

- All preset stations will be erased when a power failure occurs for more than 24 hours or the power cord is unplugged for more than 24 hours. In such cases, preset the stations again.

- Todas las estaciones presintonizadas se borran cuando ocurre un corte de energía durante más de 24 horas, o cuando se desconecta el cordón de alimentación durante más de 24 horas. En tales casos, presintonice las estaciones otra vez.

- *Tutte le stazioni preselezionate verranno cancellate se si verifica un'interruzione di corrente per più di 24 ore o se il cavo di alimentazione viene scollegato per più di 24 ore. In tali casi rieseguire la preselezione delle stazioni.*

Preset tuning

- The stations must be preset before this operation can be performed.

(Using the controls of the main unit)

① Press the TUNER/BAND button.
② Select the band (FM or AM (MW/LW)) using the TUNER/BAND button.
③ Press the PRESET TUNING button to select the required preset station.

(Using the remote control unit)

① Press the TUNER/BAND button
② Select the band (FM or AM (MW/LW)) using the TUNER/BAND button.
③ Press the required preset station buttons (No.1 – No.10, +10).
- The preset station number and frequency corresponding to the button pressed are shown.

Sintonización de estaciones presintonizadas

- Deberán presintonizarse las estaciones para poder realizar esta operación.

(Utilizando los controles de la unidad principal)

① Presione el botón TUNER/BAND.
② Seleccione la banda (FM o AM (OM/OL)) utilizando el botón TUNER/BAND.
③ Presione el botón PRESET TUNING para seleccionar la estación presintonizada deseada.

(Utilizando la unidad de control remoto)

① Presione el botón TUNER/BAND.
② Seleccione la banda (FM o AM (OM/OL)) utilizando el botón TUNER/BAND.
③ Presione los botones de estaciones presintonizadas deseadas (No. 1 – No. 10, +10).
- Se visualizará el número de estación presintonizada y la frecuencia correspondiente al botón presionado.

Sintonizzazione stazioni preselezionate

- *Le stazioni devono essere preselezionate prima di poter eseguire questa operazione.*

(Uso dei comandi del telecomando)

① *Premere il tasto TUNER/BAND.*
② *Selezionare la banda (FM o AM (MW/LW)) col tasto TUNER/BAND.*
③ *Premere il tasto PRESET TUNING per selezionare la stazione preselezionata desiderata.*

(Col telecomando)

① *Premere il tasto TUNER/BAND.*
② *Selezionare la banda (FM o AM (MW/LW)) utilizzando il tasto TUNER/BAND.*
③ *Premere il tasto della stazione preselezionata desiderata (No. 1 – No. 10, +10).*
- *Il numero della stazione preselezionata e la frequenza corrispondenti al tasto premuto vengono visualizzati.*

Using the antennas

(See page 7.)

Uso de antenas

(Ver página 7.)

Uso delle antenne

(Vedi pag. 7.)

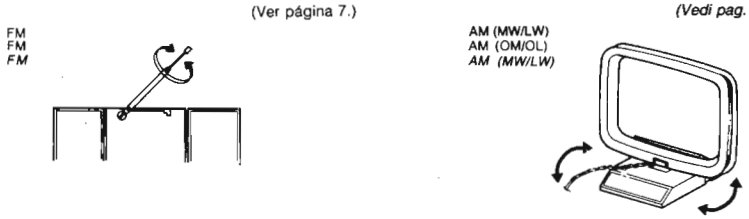

RECORDING

- In recording, the ALC circuit automatically optimizes the recording level; adjustment of the recording level is unnecessary.
- Check that the safety tab on the cassette tape is not broken off.

Note:
This unit has recording characteristics suitable for normal and CrO_2 tapes. Normal and CrO_2 tapes have different characteristics from metal tapes.

Synchronized recording with the CD player

- In this system, the CD player starts play when the cassette deck enters the recording mode.

Operate in the order shown

GRABACION

- Al efectuar una grabación, el circuito ALC (control automático de nivel) optimiza automáticamente el nivel de grabación; por lo tanto no es necesario ajustar el nivel de grabación.
- Verifique que el cassette tenga su lengüeta de seguridad.

Nota:
Esta unidad posee funciones de grabación adecuadas para cintas normales y de CrO_2. Estas cintas poseen características diferentes que las de metal.

Grabación sincronizada con el reproductor de CD

- En este sistema, el reproductor de CD comenzará la reproducción cuando la platina de cassette se establezca en el modo de grabación.

Proceda en el orden indicado

REGISTRAZIONE

- *Durante la registrazione, il circuito ALC ottimizza automaticamente il livello di registrazione; la regolazione del livello di registrazione non è perciò necessaria.*
- *Controllare che la linguetta di protezione della registrazione della cassetta non sia stata rimossa.*

Nota:
Questa unità possiede caratteristiche di registrazione adatte a nastri normali e CrO_2. I nastri normali e CrO_2 possiedono caratteristiche diverse da quelle dei nastri Metal.

Registrazione sincronizzata col lettore CD

- *In questo modo di funzionamento, il lettore CD inizia a riprodurre quando il registratore entra nel modo di registrazione.*

Eseguire le operazioni nell'ordine indicato

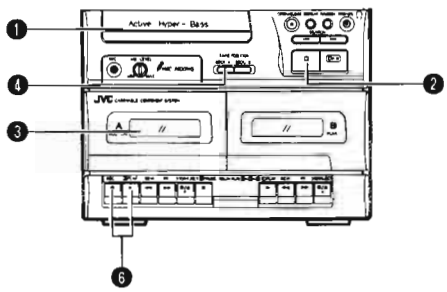

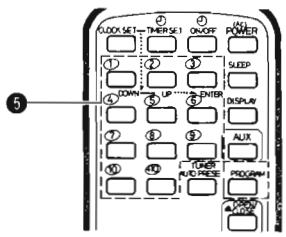

❶ Load a disc and close the CD tray.
❷ Set CD mode.
❸ Load a cassette in Deck A. (Wind past the leader tape before starting recording.)
❹ Set the TAPE POSITION (DECK A) button as required. (See page 16.)
❺ When programmed playback is required, program the required tunes using the remote control. (See page 30.)
- Select tunes with a total playing time which does not exceed the tape's length.

❻ Press the O REC button with the ► PLAY button; synchronized recording will start.

- Non-recorded sections of approx. 4 seconds are automatically left between tunes.
- When the tape reaches the end first, the CD player stops automatically; when the CD player stops first, the tape continues running. In this case, press the ■/▲ STOP/EJECT button to stop the tape.

- **When automatic spacing between tunes is not required...**
  Perform the following after finishing the previous operation (❶ to ❺).

① Press the ▷II button of the CD player twice. The CD player enters the pause mode.
② Press the O REC and ► PLAY buttons simultaneously. Now, the CD player starts playback simultaneously.

Note:
- During CD synchro recording, the ▷II and SEARCH (I◄◄, ►►I)buttons do not function.

It may be unlawful to record or playback copyrighted material without the consent of the copyright owner.

❶ Coloque un disco y cierre el portadisco de CD.
❷ Active el modo CD.
❸ Coloque un cassette en la platina A. (Antes de iniciar la grabación, avance la cinta hasta pasar el extremo no grabable de la misma).
❹ Coloque el botón TAPE POSITION (DECK A) como sea necesario. (Ver página 16).
❺ Cuando se requiera efectuar una reproducción programada, programe las canciones deseadas utilizando el control remoto. (Véase la página 30.)
- Seleccione las canciones que posean un tiempo de reproducción total que no exceda la duración de la cinta.

❻ Para iniciar la grabación sincronizada presione el botón O REC al mismo tiempo que presiona el botón ► PLAY.

- Quedan automáticamente secciones sin grabar de unos 4 segundos entre canciones.
- Cuando la cinta llega al final primero, el reproductor se detiene automáticamente; cuando el reproductor se detiene primero, la cinta continúa moviéndose. En este caso, presione el botón ■/▲ STOP/EJECT para detener la cinta.

- **Cuando el espaciamiento automático entre canciones no es necesario...**
  Realice lo siguiente después de finalizar los pasos anteriores (❶ al ❺).

① Presione dos veces el botón ▷II del reproductor; éste se establece en el modo de pausa.
② Presione los botones O REC y ► PLAY simultánea - mente. El reproductor inicia simultánea-mente la reproducción.

Nota:
- Durante la grabación sincronizada de CD, no funcionarán los botones ▷II y SEARCH (I◄◄, ►►I).

Es ilegal grabar o reproducir materiales con derechos registrados sin la autorización del propietario.

❶ *Inserire un CD e chiudere il piatto del CD.*
❷ *Impostare il modo CD.*
❸ *Inserire una cassetta nella piastra A. (Avvolgere la sezione guida del nastro prima di iniziare la registrazione).*
❹ *Impostare il tasto TAPE POSITION (DECK A) come desiderato. (Vedi pag. 16).*
❺ *Quando si desidera eseguire la riproduzione programmata, programmare i brani desiderati col telecomando. (Vedi pag. 30).*
- *Selezionare i brani con un tempo di riproduzione totale che non superi la lunghezza del nastro.*

❻ *Premere il tasto O REC assieme al tasto PLAY ►; la registrazione sincronizzata inizia.*

- *Spazi non registrati da circa 4 secondi vengono lasciati automaticamente tra i brani.*
- *Quando il nastro raggiunge la fine per primo, il lettore CD si ferma automaticamente; quando il CD finisce per primo, il nastro continua a scorrere. In questo caso premere il tasto ■/II STOP/EJECT per fermare il nastro.*

- **Quando la creazione automatica di spazi tra i brani non è necessaria ...**
  Eseguire quanto segue dopo aver finito le operazioni precedenti (da ❶ a ❺)

① *Premere due volte il tasto ▷II del lettore CD. Il lettore CD entra nel modo di pausa.*
② *Premere contemporaneamente i tasti O REC e ► PLAY. Il lettore CD inizia ora la riproduzione.*

Nota:
- *Durante la registrazione sincronizzata di CD, i tasti ▷II e SEARCH (I◄◄, ►►I) non funzionano.*

Notare che la registrazione o la riproduzione di materiali protetti da diritti d'autore senza il permesso del proprietario di tali diritti potrebbe essere contro la legge.

DUBBING (SYNCHRO START DUBBING)

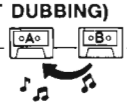

Normal speed dubbing can be done from deck B to deck A.

Operate in the order shown

❶ Load a cassette tape in Deck A. (Refer to the note on page 39.)
❷ Load a pre-recorded cassette in Deck B.
- Lightly press the ► PLAY button to set to TAPE mode. (The button should not be locked.)

❸ Set the TAPE POSITION (DECK A and B) buttons as required.
❹ Press the II PAUSE button.
❺ Press the O REC button with the ► PLAY button. (Record-pause mode.)
❻ Press the ► PLAY button. (Synchronized dubbing will start.)

Note:
- With Deck A in the record-pause mode, the II PAUSE button is released when Deck B enters the stop mode.

COPIA (CON COMIENZO SINCRONIZADO)

La copia a velocidad normal puede ser efectuada de la platina B a la platina A.

Proceda en el orden indicado

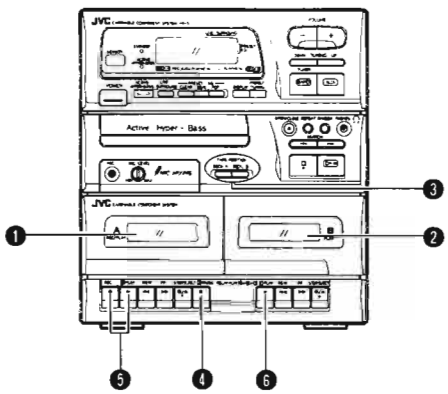

❶ Coloque un cassette de cinta en la platina A. (Refiérase a la nota de la página 39.)
❷ Coloque un cassette grabado en la platina B.
- Para activar el modo TAPE, presione levemente el botón ► PLAY. (El botón no debe quedar bloqueado).

❸ Coloque los botones TAPE POSITION (DECK A y B) como sea necesario.
❹ Presione el botón II PAUSE.
❺ Presione el botón O REC con el botón ► PLAY. (Modo de pausa de grabación.)
❻ Presione el botón ► PLAY; se iniciará la copia sincronizada.

Nota:
- Con la platina A en el modo de pausa de grabación, el botón II PAUSE se libera cuando la platina B se establece en el modo de parada.

DUPLICAZIONE (DUPLICAZIONE SINCRONIZZATA)

La duplicazione a velocità normale può essere eseguita dalla piastra B alla piastra A.

Eseguire le operazioni nell'ordine indicato

❶ *Inserire una cassetta nella piastra A. (Vedere la nota a pagina 39).*
❷ *Inserire una cassetta preregistrata nella piastra B.*
- *Premere leggermente il tasto ► PLAY per entrare nel modo TAPE. (Il tasto non deve rimanere premuto).*

❸ *Impostare i tasti TAPE POSITION (DECK A e B) come necessario.*
❹ *Premere il tasto II PAUSE.*
❺ *Premere il tasto O REC assieme al tasto ► PLAY. (Modo di pausa della registrazione).*
❻ *Premere il tasto ► PLAY. (La duplicazione sincronizzata inizia).*

Nota:
- *Con la piastra A nel modo di pausa della registrazione, il tasto II PAUSE viene rilasciato quando la piastra B entra nel modo di arresto.*

Recording from the radio or an external source connected to the AUX terminals

Operate in the order shown

Grabación desde la radio o desde una fuente externa conectada a los terminales AUX

Proceda en el orden indicado

Registrazione dalla radio o da una fonte esterna collegata ai terminali AUX

Eseguire le operazioni nell'ordine indicato

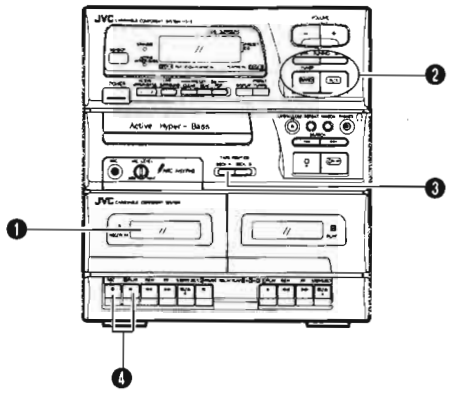

❶ Load a cassette (Deck A).
❷ Select the source to be recorded.
TUNER: Press the TUNER/BAND button. Tune to the required station.
AUX: Press the AUX button.
❸ Set the TAPE POSITION (DECK A) button as required. (See page 16.)
❹ Press the O REC button with the ► PLAY button.

- To stop recording temporarily, press the ❚❚ PAUSE button. To resume recording press the ❚❚ PAUSE button again.

❶ Coloque un cassette (platina A).
❷ Seleccione la fuente a ser grabada.
TUNER: Presione el botón TUNER/BAND. Sintonice la estación deseada.
AUX: Presione el botón AUX.
❸ Coloque el botón TAPE POSITION (DECK A) como sea necesario. (Ver página 16).
❹ Presione el botón O REC conjuntamente con el botón ► PLAY.

- Para detener temporariamente la grabación, presione el botón ❚❚ PAUSE. Para reiniciar la grabación presione otra vez el botón ❚❚ PAUSE.

❶ *Inserire una cassetta. (Piastra A)*
❷ *Selezionare la fonte da registrare.*
TUNER: Premere il tasto TUNER/BAND. Sintonizzare la stazione desiderata.
AUX: Premere il tasto AUX.
❸ *Impostare il tasto TAPE POSITION (DECK A) come desiderato. (Vedi pag. 16).*
❹ *Premere il tasto ○ REC assieme al tasto ► PLAY.*

- *Per interrompere temporaneamente la registrazione, premere il tasto ❚❚ PAUSE. Per riprendere la registrazione, premere nuovamente il tasto ❚❚ PAUSE.*

Erasing

When recording on a pre-recorded tape, the previous recording is automatically erased and only the new material can be heard when the tape is played.
To erase a tape without making a new recording...
Press the ► PLAY button of the deck to set to the TAPE mode and press the O REC and ► PLAY buttons together after pressing the stop button.

Borrado

Cuando grabe una cinta pregrabada, la grabación previa se borrará automáticamente y sólo podrá escucharse el nuevo material grabado al reproducir la cinta.
Para borrar una cinta sin efectuar una nueva grabación ...
Presione el botón ► PLAY de la platina para establecer el modo TAPE y presione los botones O REC y ► PLAY juntos luego de pulsar el botón de parada.

Cancellazione

Quando si registra su di un nastro preregistrato, la registrazione precedente viene cancellata automaticamente e quando il nastro viene riprodotto solo la nuova registrazione può essere udita.
Per cancellare un nastro senza eseguire una nuova registrazione ...
Premere il tasto ► PLAY per entrare nel modo TAPE e quindi premere contemporaneamente i tasti ○ REC e ► PLAY dopo aver premuto il tasto di arresto.

MICROPHONE MIXING

Microphone sound can be mixed with the source sound.

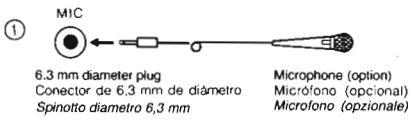

- Example of microphone mixing with CD sound

Operations
① Connect a microphone to the MIC jack. (If there is a switch on the microphone, switch it on.)
② Select the source sound (CD/TAPE/TUNER/AUX).
- **Play back the source sound selected.**

③ Adjust the MIC LEVEL control and main VOLUME controls.

- **To record the mixed sound**
In order to record this mixed sound onto a tape in the Deck A, press the ○ REC button with the ► PLAY button.

Notes:
- Use the microphone as far away the set as possible. When the microphone is too near the speakers, howling may occur.
- Disconnect the microphone from the MIC jack after use.

MEZCLADO DE MICROFONO

El sonido del micrófono puede ser mezclado con la fuente de sonido.

- Ejemplo de mezclado de micrófono con el sonido del CD

Operaciones
① Conecte el micrófono con el jack MIC. (Si el micrófono tiene un interruptor, colóquelo en ON).
② Seleccione la fuente de sonido (CD/TAPE/TUNER/AUX).
- **Reproduzca la fuente de sonido seleccionada.**

③ Ajuste el control MIC LEVEL y el control principal VOLUME.

- **Grabación de un sonido mezclado**
Para grabar el sonido mezclado en una cinta de la platina A, presione el botón ○ REC con el botón ► PLAY.

Notas:
- Utilice el micrófono lo más lejos posible de la unidad. Cuando el micrófono está cerca de los altavoces pueden producirse aullidos.
- Después de utilizarlo, desconecte el micrófono del jack MIC.

MISSAGGIO MICROFONO

Il suono del microfono può essere missato col suono della fonte.

- *Esempio di missaggio del microfono col suono del CD.*

Operazioni
① *Collegare un microfono alla presa MIC. (Se vi fosse un interruttore sul microfono, attivarlo).*
② *Selezionare la fonte sonora (CD/TAPE/TUNER/AUX).*
- **Riprodurre il suono della fonte selezionata.**

③ *Regolare i comandi MIC LEVEL e VOLUME.*

- **Per registrare i suoni missati**
Per registrare i suoni missati sul nastro nella piastra A, premere il tasto ○ REC assieme al tasto ► PLAY.

Note:
- *Utilizzare il microfono il più lontano possibile dall'unità. Se il microfono fosse troppo vicino ai diffusori, si potrebbero verificare fenomini di reazione.*
- *Scollegare il microfono dalla presa MIC dopo l'uso.*

CLOCK/TIMER ADJUSTMENT

(Using the remote control unit)

Names of parts in the clock/time section, and their functions:

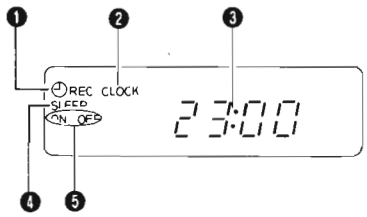

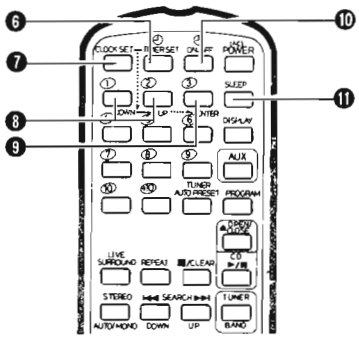

❶ Timer mode indicator
❷ CLOCK indicator
❸ Time display
❹ SLEEP indicator
❺ Timer indicator (ON/OFF)
❻ (◷) TIMER SET button
❼ CLOCK SET button
❽ UP/DOWN buttons
❾ ENTER button
❿ Timer (◷) ON/OFF button
⓫ SLEEP button

Setting the current time (when the unit is used for the first time)

(Example: to set the clock to 13:15.)

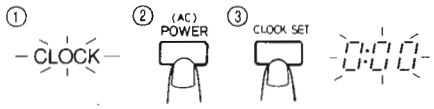

Within the 2 minutes.
Dentro de los 2 minutos.
Entro 2 minuti.

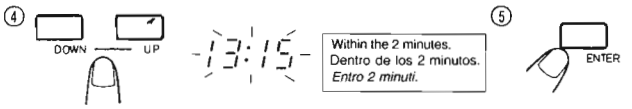

Within the 2 minutes.
Dentro de los 2 minutos.
Entro 2 minuti.

① Connect the AC power cord; "CLOCK" will blink in the display.
② Set the POWER button to ON.
- The display indication changes from the time to function.

③ Press the CLOCK SET button.
④ Set to 13:15 by pressing the UP/DOWN buttons. (When the button is kept pressed, the minute/hour indication changes continuously.)
⑤ Press the ENTER button; the display returns to the previous mode.

- To set to the nearest second... Press the ENTER button while when you hear the time signal from a TV or radio.

Notes:
- Before performing timer recording or playback, it is necessary to set the current time.
- When power is restored after a power failure of more than 1 minute or the power cord is plugged in again after being unplugged more than 1 minute, "CLOCK" will blink in the display. Reset the current time.

Setting the timer

- The current time must be set before the timer can be used.

❶ Set the POWER button to ON.
❷ Press the (◷) TIMER SET button.

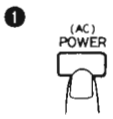

AJUSTE DEL RELOJ/TEMPORIZADOR

(Utilizado la unidad de controlador remoto)

Nombre de las parte de la sección del reloj/ temporizador y sus funciones:

❶ Indicador de modo de temporizador
❷ Indicador CLOCK
❸ Indicador de tiempo
❹ Indicador SLEEP
❺ Indicador de temporizador (ON/OFF)
❻ Botón (◷) TIMER SET
❼ Botón CLOCK SET
❽ Botones UP/DOWN
❾ Botón ENTER
❿ Botón (◷) ON/OFF del temporizador
⓫ Botón SLEEP

Fijación de la hora (cuando se utilice por primera vez la unidad)

(Ejemplo: Para fijar 13:15.)

① Conecte el cordón de CA; "CLOCK" parpadeará en el visor.
② Coloque el botón POWER en ON.
- La indicación del visor cambia de hora a función.

③ Presione el botón CLOCK SET.
④ Ajuste en 13:15 presionando los botones UP/DOWN. (Si se mantiene el botón presionado, la indicación de horas/minutos cambia continuamente).
⑤ Presione el botón ENTER; la indicación regresará al modo anterior.

- Para fijar los segundos en forma más exacta... Presione el botón ENTER al escuchar la señal horaria de la televisión o la radio.

Notas:
- Antes de realizar una grabación o reproducción con temporizador, es necesario ajustar la hora actual.
- Cuando se restaura la energía después de un corte de más de 1 minuto, o cuando se conecta el cordón de alimentación otra vez después de haberlo desconectado por más de 1 minuto, "CLOCK" parpadeará en el indicador. Ajústelo a la hora correcta.

Ajuste del temporizador

- Es necesario ajustar la hora actual antes de utilizar el temporizador.

❶ Coloque el botón POWER en ON.
❷ Presione el botón (◷) TIMER SET.

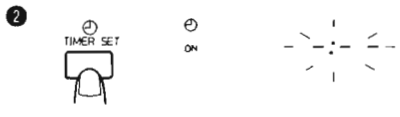

Blinks
Destella
Lampeggia

Within the 30 sec.
Dentro de 30 seg.
Entro 30 secondi.

REGOLAZIONE DELL'OROLOGIO E DEL TIMER

(Col telecomando)

Nome e funzioni delle varie parti della sezione dell'orologio e del timer:

❶ *Indicatore modo timer*
❷ *Indicatore CLOCK*
❸ *Visualizzazione orario*
❹ *Indicatore SLEEP*
❺ *Indicatore timer (ON/OFF)*
❻ *Tasto (◷) TIMER SET*
❼ *Tasto CLOCK SET*
❽ *Tasti UP/DOWN*
❾ *Tasto ENTER*
❿ *Tasto timer (◷) ON/OFF*
⓫ *Tasto SLEEP*

Impostazione dell'orario corrente (quando l'unità viene utilizzata per la prima volta)

(Esempio: per impostare l'orologio sulle 13:15).

① *Collegare il cavo di alimentazione CA; l'indicazione "CLOCK" lampeggia sul display.*
② *Portare il tasto POWER su ON.*
- *La visualizzazione sul display passa dall'orario alla funzione.*

③ *Premere il tasto CLOCK SET.*
④ *Impostare su 13:15 premendo i tasti UP/DOWN. (Quando il tasto viene tenuto premuto, le cifre dei minuti/ore cambiano continuamente).*
⑤ *Premere il tasto ENTER; la visualizzazione ritorna al modo precedente.*

- *Per un'impostazione al secondo ... Premere il tasto ENTER in corrispondenza di un segnale orario della TV o della radio.*

Note:
- *Prima di eseguire la registrazione o la riproduzione col timer è necessario impostare l'ora esatta.*
- *Quando l'alimentazione viene ripristinata dopo un'interruzione di corrente di più di 1 minuto oppure se il cavo di alimentazione viene ricollegato dopo essere rimasto scollegato per più di 1 minuto, l'indicazione "CLOCK" lampeggia sul display. Reimpostare l'orario corrente.*

Impostazione del timer

- *Prima di poter utilizzare il timer deve essere impostata l'ora esatta.*

❶ *Portare il tasto POWER su ON.*
❷ *Premere il tasto (◷) TIMER SET.*

❸ Set the timer start time.
(Example: when the timer start time is set to 12:15.).

❹ Set the stop time.
(Example: when the timer stop time is set to 13:15.)

❺ Set the volume.

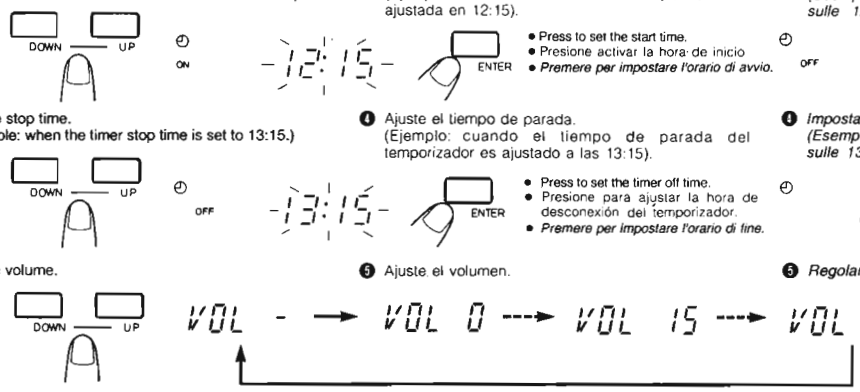

- Press to set the start time.
- Presione activar la hora de inicio
- *Premere per impostare l'orario di avvio.*

- Press to set the timer off time.
- Presione para ajustar la hora de desconexión del temporizador.
- *Premere per impostare l'orario di fine.*

When the UP button is used to select the volume.
Cuando se use el botón UP para seleccionar el volumen.
Se il tasto UP viene usato per scegliere il volume.

This shows when volume level 1 is selected.
Esto aparece cuando se selecciona el nivel 1 de volumen.
Indica che è stato scelto il livello di volume 1.

- The selected volume is set.
- El volumen seleccionado queda programado.
- *Il livello di volume selezionato viene impostato.*

- The unit enters the previously engaged mode and timer setting has been completed.
- La unidad ingresa en el modo anterior activado y el ajuste del temporizador queda completado.
- *L'unità si porta nel modo di funzionamento precedentemente attivato e la regolazione del timer è terminata.*

- When the volume setting is set to "VOL -" (volume level is not specified), the timer playback volume is at the level used before setting the timer.
- The volume decreases to zero at the timer start time, and the sound fades in.

- Cuando se coloca el ajuste del volumen en "VOL -" (no se especifica el nivel de volumen), el volumen de la reproducción por temporizador queda en el nivel que fue usado antes del ajuste del temporizador.
- El volumen se reduce a cero en el momento de activación del temporizador, y el sonido se intensifica gradualmente.

- *Se il volume viene regolato su VOL - (volume non specificato), il volume di riproduzione via timer viene portato automaticamente al livello di prima dell'attivazione del timer stesso.*
- *Il volume diminuisce a zero al momento di attivazione del timer, quindi torna lentamente al livello originario.*

- **To confirm the timer setting**

1. Press the (◷) TIMER SET button.
2. Each time the ENTER button is pressed, the timer setting can be confirmed.
3. When the previous engaged mode is displayed, the timer setting is completed.

Notes:
- When the timer is set incorrectly, perform "Setting the timer" from the beginning.
- When the timer is set, "-:--" in the display is replaced by the input digits.
- When the timer stop time is not set, the timer operates for 2 hours and then the unit is switched off.

- **Para verificar el ajuste del temporizador**

1. Presione el botón (◷) TIMER SET.
2. Para confirmar el modo de temporizador presione el botón ENTER.
3. Cuando aparezca la indicación del modo anteriormente activado, el ajuste del temporizador queda completada.

Notas:
- Cuando se ajuste el temporizador incorrectamente realice el "ajuste del temporizador" desde el principio.
- Cuando el temporizador esté ajustado, la visualización "-:--" será reemplazada por los dígitos ingresados.
- Cuando no se fije la hora de finalización del temporizador, éste funcionará por 2 horas y luego la unidad se desconectará.

- **Per controllare l'impostazione del timer**

1. *Premere il tasto (◷) TIMER SET.*
2. *Premere il tasto ENTER per controllare il modo del timer.*
3. *Quando viene visualizzato il modo precedente, l'impostazione del timer è terminata.*

Note:
- *Quando il timer viene impostato in modo scorretto oppure quando il modo corretto non viene selezionato, eseguire quanto descritto nella sezione "Impostazione del timer" dall'inizio.*
- *Quando il timer è stato impostato, l'indicazione "-:--" del display viene sostituita dalle cifre introdotte.*
- *Quando gli orari di avvio e di arresto col timer sono impostati sullo stesso orario, il timer funziona per 2 ore e qundi l'unità viene spenta.*

TIMER OPERATIONS

Timer recording

- The current time must be set correctly before you set timer recording.
- Make sure that the erase protection tabs of the cassette have not been broken off.

Operations
1. Set the POWER button to ON.
2. Load a cassette in Deck A.
   - Insert the cassette with the side to be recorded facing out.
   - Set the TAPE POSITION (DECK A) button as required.
3. Set the timer start and stop times, then set the required volume in this order. (Refer to "Setting the timer" on page 45.)
   - Set the timer about a minute before the broadcast to be recorded is scheduled to start.

FUNCIONAMIENTO DEL TEMPORIZADOR

Grabación programada

- La hora actual deberá estar correctamente fijada antes de efectuar una grabación programada.
- Asegúrese de que el cassette tenga las lengüetas de protección contra borrados.

Procedimiento
1. Coloque el botón POWER en ON.
2. Coloque un cassette en la platina A.
   - Inserte el cassette con el lado a ser grabado apuntando hacia afuera.
   - Coloque el botón TAPE POSITION (DECK A) como sea necesario.
3. Ajuste la hora de activación y desactivación del temporizador, luego ajuste el volumen deseado en este orden. (Refiérase al "Ajuste del temporizador" en la página 45).
   - Ajuste el temporizador aproximadamente un minuto antes de que empiece el programa que va a grabar.

OPERAZIONI COL TIMER

Registrazione col timer

- *L'orario corrente deve essere impostato correttamente prima di impostare la registrazione col timer.*
- *Accertarsi che le linguette di protezione della registrazione della cassetta non siano state rimosse.*

Operazioni
1. *Portare l'interruttore POWER su ON.*
2. *Inserire una cassetta nella piastra A.*
   - *Inserire la cassetta col lato da registrare rivolto all'esterno.*
   - *Impostare il tasto TAPE POSITION (DECK A) come necessario.*
3. *Impostare gli orari di avvio ed arresto col timer e quindi il volume in questo ordine.*
   (Vedere la sezione "Impostazione del timer" a pag. 45.)
   - *Impostare il timer su circa un minuto prima dell'inizio della trasmissione che si desidera registrare.*

4. Tune to the station to be recorded. (Refer to page 35.)
5. Set the POWER button to STANDBY.
6. Press the ○ REC and ► PLAY buttons of deck simultaneously.
   - The (◷) REC is shown in the timer display.
   - Timer recording will start at the preset start time and the power will be switched off at preset time. (The timer mode is then released.)

Note:
The POWER is not switched off till the tape stops automatically, even when the timer stop time has expired during recording.

- **To cancel timer operation**
  Set the POWER button to ON, then press the timer (◷) ON/OFF button, so that the timer mode indicator (◷) goes out.

If you do this, timer recording will not start at the timer start time.

Notes:
Once the timer has been set, the start and stop times, etc., are stored in memory. When timer recording or playback is required at different times, the timer must be set again.
- After setting the timer start and stop times, check that the unit is tuned to the required frequency.

4. Sintonice la estación a ser grabada. (Refiérase a la página 35).
5. Coloque el botón POWER en STANDBY.
6. Presione simultáneamente los botones ○ REC y ► PLAY de la platina.
   - Aparecerá (◷) REC en la indicación del temporizador.
   - La grabación por temporizador comenzará a la hora preajustada y la alimentación se desconectará a la hora preajustada. (Luego el modo de temporización será desactivado).

Nota:
POWER no se desconecta hasta que la cinta se detenga automáticamente, aún cuando la hora de desactivación del temporizador haya pasado durante la grabación.

- **Cancelación de la operación por temporizador**
  Coloque el botón POWER en ON, luego presione el botón (◷) ON/OFF, de tal manera que el indicador (◷) de modo de temporización se apague.

Si usted hace esto, la grabación por temporizador no se iniciará hasta la hora de activación del temporizador.

Notas:
Una vez que ajusta el temporizador, la hora de activación y desactivación, etc., son almacenadas en memoria. Cuando la grabación o reproducción por temporizador sean necesarias a diferentes horas, es necesario ajustar el temporizador otra vez.

- Después de ajustar las horas de activación y desactivación del temporizador, verifique que la unidad esté sintonizada en la frecuencia deseada.

4. Sintonizzare la stazione da registrare. (Vedi pag. 35).
5. Impostare il tasto POWER su STANDBY.
6. Premere i tasti ○ REC e ► PLAY della piastra contemporaneamente.
   - *L'indicazione (◷) REC viene visualizzata sul display del timer.*
   - *La registrazione col timer inizia e l'alimentazione viene disattivata agli orari preimpostati. (Il modo del timer viene quindi abbandonato).*

Nota:
L'alimentazione non viene disattivata fino a che il nastro non si ferma automaticamente, anche se l'orario di arresto col timer è stato raggiunto durante la registrazione.

- **Per cancellare il funzionamento col timer**
  Portare il tasto POWER su ON e quindi premere il tasto (◷) ON/OFF del timer in modo che l'indicatore del modo del timer (◷) si spenga.

Se questa operazione viene eseguita, la registrazione col timer non si avvierà all'orario di avvio del timer.

Note:
Una volta che il timer è stato impostato, gli orari di avvio e di arresto vengono memorizzati. Quando si desidera eseguire la registrazione o la riproduzione ad un orario diverso, il timer deve essere reimpostato.
- *Dopo aver impostato gli orari di avvio e di arresto del timer, controllare che l'unità sia sintonizzata sulla frequenza desiderata.*

Timer playback

- Timer playback of tapes, broadcasts and CDs is possible.

Operations
❶ Set the POWER button to ON.
❷ Set the timer start and stop times, then set the volume, in this order. (Refer to "Setting the timer" on page 45.)
❸ Select the source sound.

Source sound	Timer mode	Operations
CD play	CD	Load a disc and press the ■ /CLEAR button to set the CD mode.
Tape playback	TAPE	Load a cassette tape.
Radio broadcast	TUNER	Press the TUNER/BAND button to set to the tuner mode and tune to the required frequency.

- Timer playback of a CD is possible in programmed order. (See page 30.)

❹ Set the POWER button to STANDBY.
   - The timer mode indicator (◷) and current time is displayed.
   (When performing the timer playback of tape, press the ► PLAY button of the deck.)

- Timer playback will start at the timer start time and the power will be switched off at the timer stop time. (Tuner or CD)
  The power will not be switched off at the specified time during tape operation and will switched off at the tape end.
  The unit remains in the same timer mode even after the power is switched off and the same timer function will be repeated at the same time on the following day.

Reproducción con programada

- Es posible la reproducción de cintas, audición de radioemisiones y CD utilizando el temporizador.

Operaciones
❶ Coloque el botón POWER en ON.
❷ Primero fije la hora de puesta en marcha y parada del temporizador y luego ajuste el volumen. (Refiérase a "Ajuste del temporizador" de la página 45.)
❸ Seleccione la fuente.

Fuente	Modo de temporizador	Operaciones
Reproducción de CD	CD	Coloque un disco y presione el botón ■/ CLEAR para establecer el modo CD.
Reproducción de una cinta	TAPE	Coloque un cassette.
Radioemisión	TUNER	Presione el botón TUNER/BAND para establecer el modo de sintonizador y sintonice la frecuencia deseada.

- Es posible la reproducción de un CD con temporizador en el orden programado. (Véase la página 30.)

❹ Coloque el botón POWER en STANDBY.
   - Aparecen el indicador (◷) del modo de temporización y la hora actual.
   (Cuando realice la reproducción de un cassette con el temporizador, presione el botón ► PLAY de la platina.)

- La reproducción comenzará a la hora de puesta en marcha del temporizador y la unidad se desconectará a la hora de parada del temporizador. (Sintonizador o CD)
  La alimentación no se desconectará a la hora fijada durante el funcionamiento de una cinta sino al final de la cinta.
  La unidad permanecerá en el mismo modo de temporizador incluso después de desconectarse la unidad y se repetirá la misma función del temporizador a la misma hora del siguiente día.

Riproduzione col timer

- *È possibile eseguire la riproduzione col timer di nastri, trasmissioni e CD.*

Operazioni
❶ *Portare l'interruttore POWER su ON.*
❷ *Impostare gli orari di avvio ed arresto col timer e quindi il volume in questo ordine. (Vedere la sezione "Impostazione del timer" a pag. 45.)*
❸ *Selezione la fonte.*

Fonte	*Modo di funzionamento*	*Operazioni*
Riproduzione CD	*CD*	*Inserire un CD e premere il tasto ■/CLEAR per impostare il modo del CD.*
Riproduzione nastri	*TAPE*	*Caricare una cassetta.*
Programma radio	*Sintonizzatore TUNER*	*Premere il tasto TUNER/BAND per impostare il modo del sintonizzatore e sintonizzare quindi la frequenza desiderata.*

- *La riproduzione via timer di un CD è possibile anche con la programmazione dei brani. Vedi in proposito pag. 30.*

❹ *Impostare il tasto POWER su STANDBY.*
   - *L'indicatore del modo del timer (◷) e l'orario corrente vengono visualizzati.*
   (Quando si esegue la riproduzione di un nastro col timer, premere il tasto ► PLAY della piastra).

- *La riproduzione col timer inizia all'orario di avvio del timer mentre l'alimentazione viene disattivata all'orario di arresto. (Sintonizzatore o lettore CD)*
  Durante il funzionamento con un nastro, l'alimentazione non viene disattivata all'orario di arresto ma alla fine del nastro.
  L'unità rimane nello stesso modo del timer anche dopo che l'alimentazione viene disattivata e la stessa funzione del timer viene ripetuta alla stessa ora il giorno seguente.

- When the power is switched on, it is possible to fade in the sound from volume level 0 (zero) to the preset volume.

- **To cancel timer operation**
  Set the POWER button to ON, then press the timer (◷) ON/OFF button, so that the timer mode indicator (◷) goes out.

Notes:
- To stop during timer playback, press the POWER button to switch the unit off.
- In the fade-in mode, the volume gradually increases from zero.

- Cuando se enciende el aparato, es posible aumentar gradualmente el sonido desde el volumen cero (0) hasta el volumen preajustado.

- **Para cancelar el funcionamiento del temporizador**
  Coloque el botón POWER en ON, luego presione el botón (◷) ON/OFF, de tal manera que se apague el indicador (◷) del modo de temporización.

Notas:
- Para detener la reproducción con temporizador durante su funcionamiento, presione el botón POWER para apagar la unidad.
- En el modo de aumento gradual del sonido, el volumen aumentará gradualmente desde cero.

- *Quando l'alimentazione viene iniziata, è possibile eseguire un'apertura in dissolvenza dal livello di volume 0 (zero) al livello impostato.*

- **Per cancellare il funzionamento col timer**
  Portare il tasto POWER su ON e quindi premere il tasto (◷) ON/OFF del timer in modo che l'indicatore del modo del timer (◷) si spenga.

Note:
- *Per interrompere il funzionamento durante la riproduzione col timer, premere l'interruttore POWER per interrompere l'alimentazione.*
- *Nel modo di dissolvenza in entrata, il volume aumenta gradualmente da zero.*

SLEEP OPERATIONS

(Using the remote control unit)

A. Use this when you want to fall asleep while listening to a tape, broadcast or CD

① Set the required source and tune (tuner) or play back (CD or tape).
② Press the SLEEP button to set to the sleep time.

SLEEP is shown in the display.
Se visualiza SLEEP en el display.
L'indicazione SLEEP viene visualizzata sul display.

- Sleep times of 30, 60, 90 or 120 minutes can be set. When you release the SLEEP button, the source is displayed after 5 sec.

FUNCIONAMIENTO DEL TEMPORIZADOR DE DESCONEXION

(Utilizando la unidad de controlador remoto)

A. Utilice esta función cuando desee dormir mientras escucha una cinta, radioemisión o CD

① Establezca la fuente deseada y sintonice (sintonizador) o reproduzca (CD o cinta).
② Presione el botón SLEEP para fijar la hora de desconexión.

Source mode display (Releasing the sleep mode)
Visualización del modo de fuente (Cancelación del modo de desconexión)
Visualizzazione fonte (Abbandono del modo di spegnimento a tempo)

- Pueden ajustarse tiempos de desconexión de 30, 60, 90 ó 120 minutos. Cuando suelte el botón SLEEP, se visualizará la fuente en 5 seg.

SPEGNIMENTO A TEMPO

(Col telecomando)

A. Utilizzare questa funzione per addormentarsi ascoltando un nastro, una trasmissione o un CD

① *Impostare la fonte desiderata ed eseguire la sintonizzazione (sintonizzatore) oppure avviare la riproduzione (CD o nastro).*
② *Premere il tasto SLEEP per impostare l'orario di spegnimento.*

- *Possono essere impostati tempi di 30, 60, 90 o 120 minuti per lo spegnimento a tempo. Quando si rilascia il tasto SLEEP, la fonte viene visualizzata per 5 secondi.*

- The sleep operation will start and the power will be switched off after the specified time. (Tuner & CD modes)
  The power will not be switched off at the specified time during tape operation and will switched off at the tape end.

- **Checking the sleep time**
  When the SLEEP button is pressed, the remaining sleep time is displayed. If it is pressed again, a new sleep time can be set.

- **To cancel the sleep operation**
  Press the POWER button to switch the power off or press the SLEEP button until the sleep time indicator disappears.

B. To fall asleep while listening to a broadcast or compact disc and to perform timer playback the following morning

1. Set the timer playback start and stop times and volume. (See the "Setting the timer" on page 45.)
2. Set to the required source.

When falling asleep		When waking up
CD play	→	CD play
Broadcast	→	Broadcast

- During tape playback, the power is switched off when the tape ends, so only "When falling asleep" or "When waking up" operation is possible.

3. Press the SLEEP button to set the sleep time.

- Comenzará a funcionar el temporizador de desconexión y se apagará la unidad una vez que haya transcurrido el tiempo especificado. (Modos de sintonizador y CD)
  La alimentación no se desconectará a la hora fijada durante el funcionamiento de una cinta sino al final de la cinta.

- **Verificación de la hora de desconexión**
  Cuando se presiona el botón SLEEP, se visualizará el tiempo restante de desconexión. Si se lo presiona nuevamente, se fijará un nuevo tiempo de desconexión.

- **Para cancelar el temporizador de desconexión**
  Presione el botón POWER para apagar la unidad o presione el botón SLEEP hasta que desaparezca la indicación de desconexión.

B. Para dormirse mientras escucha una radioemisión o CD y realizar una reproducción con temporizador a la mañana siguiente

1. Programe la hora de activación, parada y el volumen de la reproducción por temporizador (Ver "Ajuste del temporizador" en la página 45).
2. Establezca la fuente deseada.

Cuando vaya a dormir		Cuando despierta
Reproducción de CD	→	Reproducción de CD
Radiodifusión	→	Radiodifusión

- Al reproducir una cinta la alimentación se desconecta cuando la cinta termina, por eso la operación es posible sólo "cuando vaya a dormir" o "cuando despierta".

3. Presione el botón SLEEP para fijar la hora de desconexión.

- *Il funzionamento con spegnimento a tempo inizia e l'alimentazione viene disattivata dopo che il tempo specificato è trascorso. (Modi del sintonizzatore e lettore CD)*
  L'unità non viene spenta all'ora di spegnimento durante il funzionamento del registratore e viene invece spenta alla fine del nastro.

- **Controllo del tempo specificato**
  Quando il tasto SLEEP viene premuto, il tempo rimanente fino allo spegnimento viene visualizzato. Se il tasto viene premuto nuovamente è possibile impostare un nuovo tempo per lo spegnimento automatico.

- **Per cancellare il funzionamento con spegnimento automatico**
  Premere l'interruttore POWER per spegnere il sistema o premere il tasto SLEEP sino a che l'indicatore dell'ora di spegnimento via timer scompare.

B. Per addormentarsi ascoltando una trasmissione, un nastro o un CD ed eseguire quindi la riproduzione col timer la mattina successiva

1. *Impostare gli orari di avvio ed arresto col timer. Vedere la sezione "Impostazione del timer" a pag. 45.*
2. *Scegliere una sorgente di segnale.*

Nell'addormentarsi		*Nello svegliarsi*
Riproduzione di CD	→	*Riproduzione di CD*
Ricezione radio	→	*Ricezione radio*

- *Durante la riproduzione di un nastro, il registratore si spegne solo alla fine del nastro, così che solo le operazioni "Nell'addormentarsi" e "Nello svegliarsi" sono possibili.*

3. *Premere il tasto SLEEP per impostare il tempo per lo spegnimento automatico.*

MAINTENANCE

Cleaning is important!
When the tape is running, magnetic powder and dust naturally accumulate on the heads, capstan and pinch roller. When they become too dirty ...
- sound quality deteriorates
- the output sound level drops
- the previous sound is not completely erased
- recording is not performed satisfactorily.

Because of this, you should clean the heads, etc. every 10 hours of use, so that perfect recording is possible.

Cleaning the heads, capstan and pinch roller

Open the cassette holder.
Clean the heads, pinch roller and capstan.
For effective cleaning, use a cleaning kit available from an audio store.
After cleaning, be sure that the cleaning fluid has dried completely before loading a cassette.

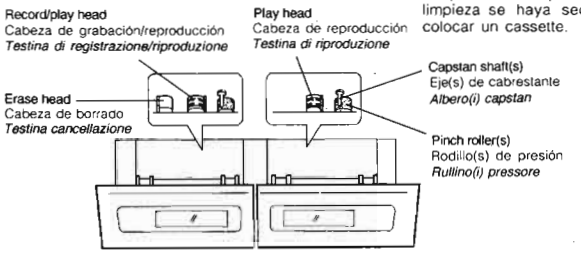

Cautions:
1. Keep magnets and metallic objects away from the head. If the head becomes magnetized, noise will increase and the tone will deteriorate. Demagnetize the head every 20 - 30 hours of use with a head eraser (available from an audio store). (When demagnetizing the head, the POWER button should be set to STANDBY).
2. Do not use anything other than alcohol for cleaning. Thinner and benzine will damage the rubber pinch roller.

MANTENIMIENTO

¡La limpieza es importante!
Cuando la cinta se mueve, el polvo magnético y suciedad se acumulan naturalmente en las cabezas, cabrestante y rodillo de presión. Cuando éstos se ensucian demasiado ...
- Se deteriora la calidad del sonido
- Disminuye el de salida nivel de sonido
- El sonido previo no se borra completamente
- No se logran grabaciones satisfactorias

Por ello, deberá limpiar las cabezas, etc., cada 10 horas de uso, para obtener una grabación perfecta.

Limpieza de cabezas, cabrestante y rodillo de presión

Abra el portacassette.
Limpie las cabezas, el rodillo de presión y el cabrestante.
Para una limpieza efectiva, utilice los juegos de limpieza disponibles en cualquier comercio de audio.
Después de la limpieza, asegúrese de que el líquido de limpieza se haya secado completamente antes de colocar un cassette.

Precauciones:
1. Mantenga imánes y objetos metálicos lejos de la cabeza. Si se magnetiza la cabeza, aumentará el ruido y se deteriorará el tono. Desmagnetice la cabeza cada 20 — 30 horas de uso con un desmagnetizador de cabezas (disponible en cualquier comercio de audio). (Cuando desmagnetice la cabeza, asegúrese que el botón POWER esté en STANDBY).
2. Utilice únicamente alcohol para la limpieza. La bencina y el diluyente dañarán el rodillo de presión de goma.

MANUTENZIONE

La pulizia è importante.
Quando il nastro scorre, polvere magnetica e sporco si accumulano su testine, capstan e rullini pressori.
Quando essi sono eccessivamente sporchi ...
- *La qualità del suono si deteriora*
- *Il livello del suono in uscita cala*
- *I materiali registrati in precedenza non vengono cancellati completamente*
- *La registrazione non viene eseguita in modo soddisfacente*

Per questi motivi, pulire le testine, ecc., ogni 10 ore di utilizzo in modo da poter ottenere registrazioni perfette.

Pulizia di testine, capstan e rullini pressori

Aprire il vano della cassetta.
Pulire testine, rullini pressori e capstan.
Per pulire in modo efficace, utilizzare un corredo di pulizia disponibile presso i negozi specializzati.
Dopo la pulizia accertarsi che il liquido pulente si sia asciugato completamente prima di inserire una cassetta.

Precauzioni:
1. *Tenere magneti ed oggetti metallici lontani dalla testina. Se la testina si magnetizza, i disturbi aumentano ed i toni si deteriorano. Smagnetizzare la testina ogni 20 – 30 ore di uso con un dispositivo apposito (reperibile presso un negozio specializzato). Quando si smagnetizza la testina, l'interruttore POWER deve trovarsi su STANDBY.*
2. *Utilizzare solo alcool per la pulizia. Diluente o benzina danneggiano la gomma del rullini pressori.*

TROUBLESHOOTING

What appears to be trouble is not always serious. Make sure first ....

- **Power cannot be turned on.**
  - Is the power cord unplugged?
- **No sound from the speakers.**
  - Are headphones connected?

CD Player Section
- **The CD player does not play.**
  - Is the disc upside down?
  - Is the disc dirty?
- **A certain portion of the disc does not play correctly.**
  - Is the disc scratched?

Cassette Deck Section
- **Playback sound is at a very low level.**
  - Is the head dirty?
- **The ○ REC button does not function.**
  - Have the safety tabs of the cassette been broken off?

Tuner Section
- **Reception is noisy.**
  - Try adjusting the antenna.

Timer Section
- **Timer operation does not start.**
  - Is the current time set correctly?
  - Is the timer mode (◷) displayed?

Remote Control
- **Remote control is impossible.**
  - Are the batteries in the remote control exhausted?
  - Is the REMOTE SENSOR section exposed to bright light (direct sunlight, etc.)?

Note:
Before making an important recording, be sure to make a test recording first to check that the deck, etc. is working correctly.

DETECCION DE PROBLEMAS

Aquello que parece ser una falla no siempre es algo serio Asegúrese primero ...

- **No se puede encender la unidad.**
  - ¿Está desenchufado el cable de alimentación?
- **No sale sonido por los altavoces.**
  - ¿Están conectados los auriculares?

Sección del reproductor de CD
- **El reproductor no funciona.**
  - ¿Está el disco invertido?
  - ¿Está el disco sucio?
- **No se puede reproducir correctamente una cierta sección del disco.**
  - ¿Está el disco rayado?

Sección de la platina de cassette
- **El sonido de reproducción es muy bajo.**
  - ¿Está la cabeza sucia?
- **No funciona el botón ○ REC.**
  - ¿Se han extraido las lengüetas de seguridad del cassette?

Sección del sintonizador
- **La recepción es ruidosa.**
  - Trate de ajustar la antena.

Sección del temporizador
- **No funciona el temporizador.**
  - ¿Está fijada la hora actual correctamente?
  - ¿Se visualiza el modo de temporizador (◷)?

Control remoto
- **No funciona el control remoto.**
  - ¿Están agotadas las pilas del control remoto?
  - ¿Está expuesta la sección REMOTE SENSOR a luces fuertes (directamente a la luz solar, etc.)?

Nota:
Antes de efectuar una grabación importante, realice una grabación de prueba para verificar que la platina, etc., funcione correctamente.

DIAGNOSTICA

Quanto appare essere un problema, molto spesso non è nulla di serio. Controllare per prima cosa quanto segue ...

- **L'alimentazione non può essere attivata.**
  - *Il cavo di alimentazione è scollegato?*
- **I diffusori non producono alcun suono.**
  - *Le cuffie sono collegate?*

Sezione lettore CD
- **Il lettore CD non riproduce.**
  - *Il CD è rovescio?*
  - *Il CD è sporco?*
- **Una parte del CD non viene riprodotta correttamente.**
  - Il CD è graffiato?

Sezione registratore a cassette
- **Il livello del suono riprodotto è molto basso.**
  - *La testina è sporca?*
- **Il tasto ○ REC non funziona.**
  - *Le linguette di protezione della registrazione della cassetta sono state rimosse?*

Sezione sintonizzatore
- **La ricezione è disturbata.**
  - *Provare ad orientare l'antenna.*

Sezione timer
- **Il funzionamento col timer non si avvia.**
  - *L'orario corrente è impostato in modo corretto?*
  - *Il modo del timer (◷) viene visualizzato?*

Telecomando
- **Il funzionamento col telecomando è impossibile.**
  - *Le batterie del telecomando sono scariche?*
  - *La sezione REMOTE SENSOR è esposta ad una forte illuminazione (luce solare diretta, ecc.).*

Nota:
Prima di eseguire registrazioni importanti, accertarsi di eseguire una registrazione di prova per essere certi che il funzionamento del registratore, ecc., sia corretto.

SPECIFICATIONS

Compact disc player section

Type	:	Compact disc player
Signal detection system	:	Non-contact optical pickup (semiconductor laser)
Number of channels	:	2 channels (stereo)
Frequency response	:	20 Hz – 20,000 Hz
Signal-to-noise ratio	:	90 dB
Wow & flutter	:	Less than measurable limit

Radio section

Frequency ranges	:	**FM 87.5 – 108 MHz** **65 – 74MHz (VX)** **87.5 – 108MHz (VX)** AM: (MW) 522 – 1,629 kHz (LW) 144 – 288 kHz
Antennas	:	Telescopic antenna for FM Loop antenna for AM (MW/LW) External antenna terminal for FM (75 Ω)

Tape deck section

Track system	:	4-track 2-channel stereo
Motor	:	Electronic governor DC motor for capstan
Heads	:	Deck A; Hard permalloy head for recording/playback, 2 gap permalloy head for erasure Deck B; Hard permalloy head for playback
Frequency response	:	50 – 15,000 Hz (with CrO_2 tape)
Wow & flutter	:	0.15 % (WRMS)
Fast wind time	:	Approx. 120 sec. (C-60 cassette)

General

Power output	:	Max. 28 W (14 W + 14 W) at 8 Ω 20 W (10 W + 10 W) at 8 Ω (10% THD)
Input terminals	:	MIC (6.3 mm dia. plug) (Matching impedance : 200 Ω – 2 kΩ) AUX IN (310 mV/68 kΩ)
Output terminals	:	Speaker x 2 (Matching impedance: 8 Ω - 16 Ω) PHONES x 1 (Output level:0 – 15 mW/32 Ω, Matching impedance: 16 Ω - 1 kΩ)

Power supply	:	AC 230 V, 50 Hz DC 13.5 V ("R20" x 9) Ext. DC 12 V (Car battery via optional CA-R120 E car adapter)
Power consumption	:	33 W (with POWER SW ON) 5.0 W (with POWER SW STANDBY)
Dimensions	:	630(W) x 296(H) x 278(D) mm including knobs
Weight	:	10.8 kg (with batteries) 9.9 kg (without batteries)
Accessories provided	:	AC power cord x 1 Remote control unit (RM-RXH5K) x 1 Battery "R6" x 2 (for the remote control) Loop antenna stand x 1 Antenna adapter x 1

Speaker Section (each unit)

Speakers (Impedance)	:	12 cm x 1 (8 Ω), 5 cm x 1 (6 Ω)
Dimensions	:	191 (W) x 296 (H) x 216 (D) mm
Weight	:	Approx. 2.2 kg

Design and specifications are subject to change without notice.

ESPECIFICACIONES

Sección del reproductor de compact disc

Tipo	:	Reproductor de compact disc
Sistema de detección de señales	:	Fonocaptor óptico sin contacto (láser de semiconductor)
Número de canales	:	2 canales (estéreo)
Respuesta de frecuencia	:	20 Hz - 20.000 Hz
Relación señal-ruido	:	90 dB
Fluctuación y tremolación	:	Inferior al límite medible

Sección de la radio

Gamas de frecuencias	:	**FM 87.5 – 108 MHz** **65 – 74MHz (VX)** **87.5 – 108MHz (VX)** AM: (OM) 522 – 1.629 kHz (OL) 144 – 288 kHz
Antenas	:	Antena telescópica para FM Antena de cuadro para AM (OM/OL) Terminal de la antena exterior para FM (75 Ω)

Sección de la platina

Sistema de pistas	:	4 pistas y 2 canales estéreo
Motor	:	Motor de CC controlado electrónicamente para el cabrestante
Cabezas	:	Platina A; cabeza de aleación dura "Permalloy" para grabación/reproducción, cabeza de "Permalloy"de doble entrehierro para borrado Platina B; cabeza de aleación dura "Permalloy" para reproducción
Respuesta de frecuencia	:	50 - 15.000 Hz (con cinta CrO_2)
Fluctuación y tremolación	:	0.15% (WRMS)
Tiempo de bobinado rápido	:	Aprox. 120 segundos (cassette C-60)

Generalidades

Salida de potencia	:	Máx. 28 W (14 W + 14 W) a 8 Ω 20 W (10 W + 10 W) a 8 Ω (10% DHT)
Terminales de entrada	:	MIC (6,3 mm ø conector) (Impedancia de adaptación: 200 Ω – 2 kΩ) AUX IN (310 mV/68 kΩ)
Terminales de salida	:	Altavoz x 2 (Impedancia de adaptación: 8 Ω – 16 Ω) PHONES x 1 (Nivel de salida: 0 – 15 mW/32Ω. Impedancia de adaptación: 16 Ω – 1 kΩ)

Alimentación	:	AC 230 V, 50 Hz CC 13,5 V ("R20" x 9) 12 V de CC ext. (bateria del automóvil via adaptador para automóvil CA-R120E opcional)
Consumo	:	33 W (con el interruptor de alimentación activado) 5,0 W (con el interruptor de alimentación en STANDBY)
Dimensiones	:	630 (An) x 296 (Al) x 278 (Pr) mm incluyendo perillas
Peso	:	10,8 kg (con pilas) 9,9 kg (sin pilas)
Accesorios suministrados	:	Cordón de CA x 1 Unidad de control remoto (RM-RXH5K) x 1 Pilas "R6" x 2 (para el control remoto) Soporte de antena de cuadro x 1 Adaptador de antena x 1

Sección de altavoces (cada unidad)

Altavoces (Impedancia)	:	12 cm x 1 (8 Ω), 5cm x 1 (6 Ω)
Dimensiones	:	191 (An) x 296 (Al) x 216 (Pr) mm
Peso	:	Aprox. 2,2 kg

Diseño y especificaciones sujetos a cambio sin aviso.

DATI TECNICI

Sezione lettore CD

Tipo	:	*Lettore di CD*
Lettura segnale	:	*Pickup ottico senza contatto (laser a semiconduttori)*
Numero canali	:	*2 canali*
Risposta in frequenza	:	*20 Hz – 20.000 Hz*
Rapporto segnale/ rumore	:	*90 dB*
Wow & Flutter	:	*Meno del limite misurabile*

Sezione radio

Gamme frequenza	:	***FM 87.5 – 108 MHz*** ***65 – 74MHz (VX)***< ***87.5 – 108MHz (VX)*** *AM (MW) 522 – 1.629 kHz* *(LW) 144 – 288 kHz*
Antenna	:	*Terminale per antenna FM esterna* *Antenna ad anello per AM (MW/LW)* *Terminale per antenna FM esterna (75Ω)*

Sezione registratore

Sistema registrazione	:	*4 piste, 2 canali stereo*
Motore	:	*Motorino CC controllato elettronicamente per i capstan*
Testine	:	*Piastra A: Testina in permalloy duro per registrazione/ riproduzione; testina in permalloy a doppio traferro per cancellazione* *Piastra B: Testina in permalloy duro per riproduzione*
Risposta in frequenza	:	*50 – 15.000 Hz (con nastro CrO_2)*
Wow & Flutter	:	*0,15 % (WRMS)*
Tempo avvolgimento rapido	:	*Circa 120 secondi (cassetta C-60)*

Generali

Potenza in uscita	:	*28 W (14 W+14 W) a 8 Ω (mass.)* *20 W (10 W + 10 W) a 8 Ω (10 % THD)*
Terminali di ingresso	:	*MIC (spinotto diametro 6,3 mm) (impedenza 200 Ω – 2 kΩ)* *AUX IN (310 mV/68 kΩ)*
Terminali in uscita	:	*Diffusori x 2 (impedenza 8Ω – 16Ω)* *Cuffie x 1 (0 – 15 mW/32Ω) (impedenza 16 Ω – 1 kΩ)*

Alimentazione	:	*230 V CA, 50 Hz* *13,5 V CC (batterie R20 x 9)* *Presa DC 12 V (batteria d'automobile attraverso l'adattatore opzionale CA-R120E)*
Consumo	:	*33 W (con POWER su ON)* *5,0 W (con POWER su STANDBY)*
Dimensioni	:	*630 (L) x 296 (A) x 278 (P) mm manopole incluse*
Peso	:	*Circa 10,8 kg con batterie* *Circa 9,9 kg senza batterie*
Accessori in dotazione	:	*Cavo alimentazione CA x 1* *Unità di telecomando (RM-RXH5K) x 1* *Batterie "R6" x 2 (telecomando)* *Base antenna ad anello x 1* *Adattatore antenna x 1*

Sezione diffusori (ciascuna unità)

Altoparlante (Impedenza)	:	*12 cm x 1 (8 Ω), 5cm x 1 (6 Ω)*
Dimensioni	:	*191 (L) x 296 (A) x 216 (P) mm*
Peso	:	*Circa 2,2 kg*

Disegno e dati tecnici soggetti a cambiamenti senza preavviso.

4. Location of Main Parts

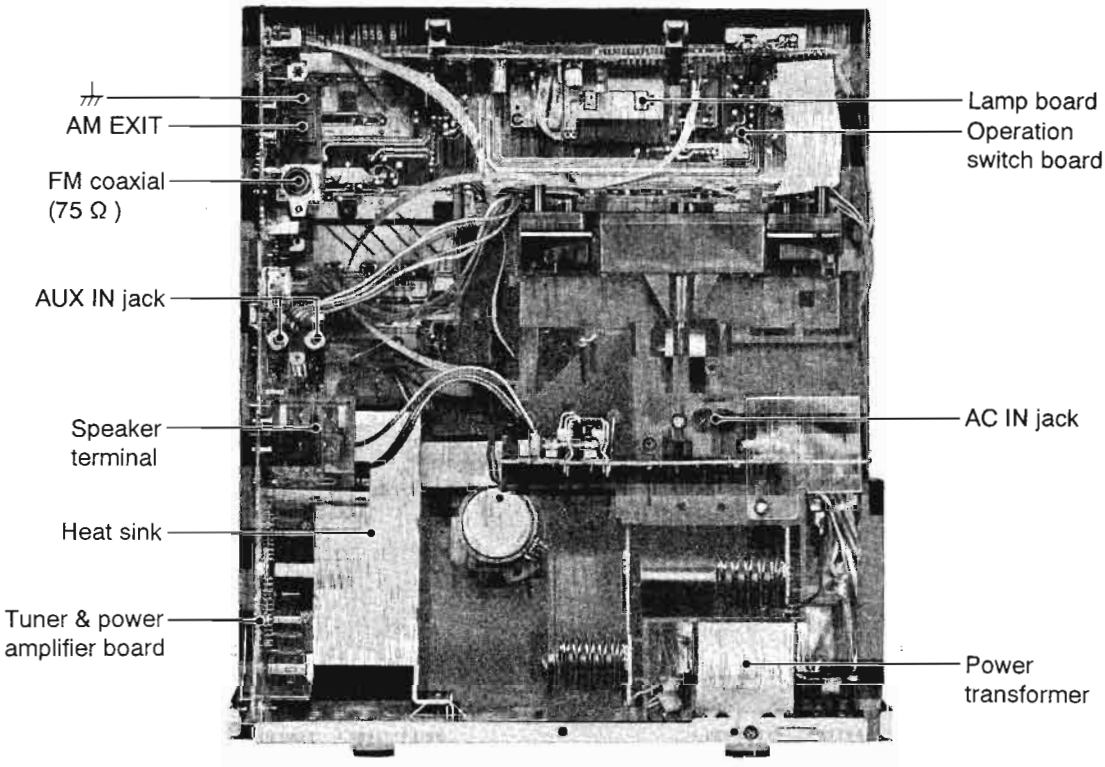

Fig. 4-1

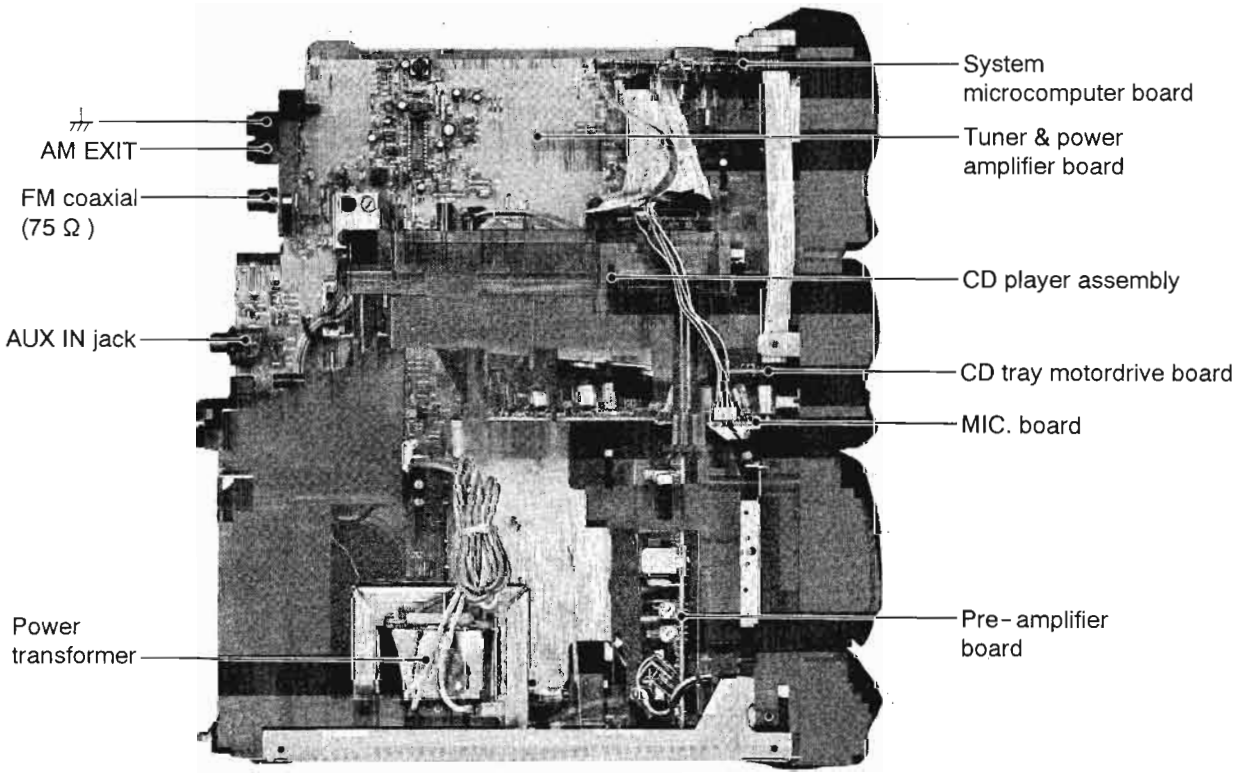

Fig. 4-2

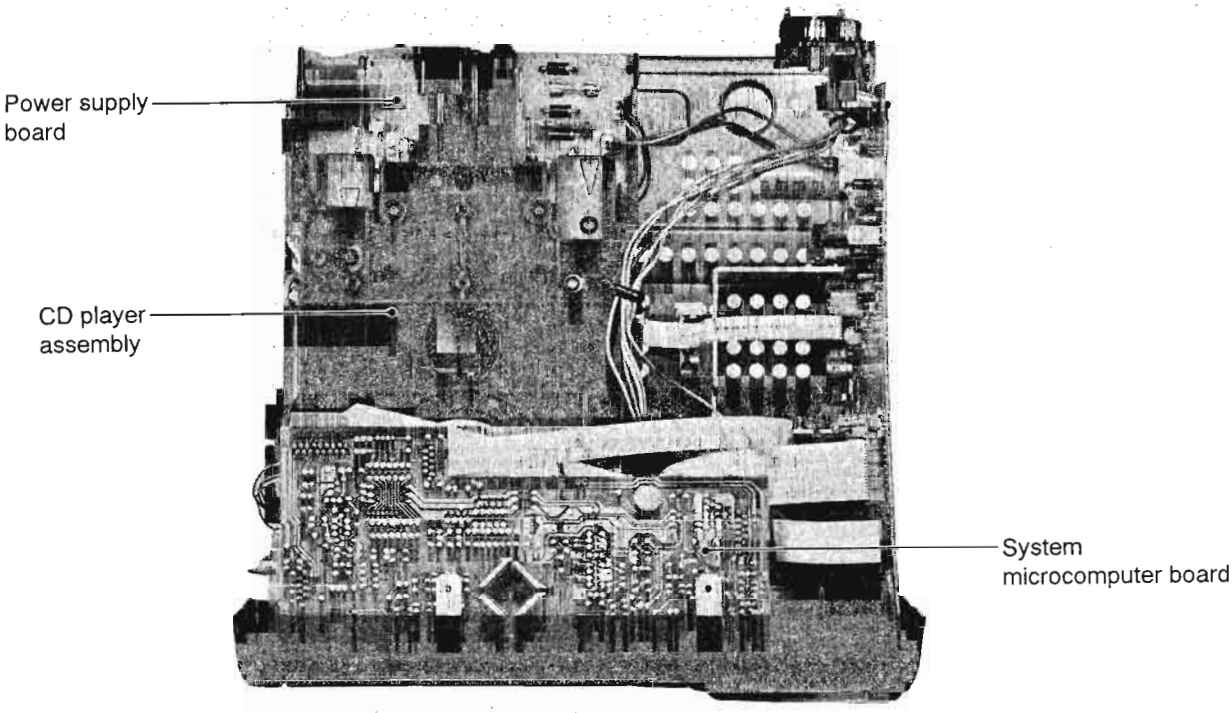
Power supply board
CD player assembly
System microcomputer board

Fig. 4-3

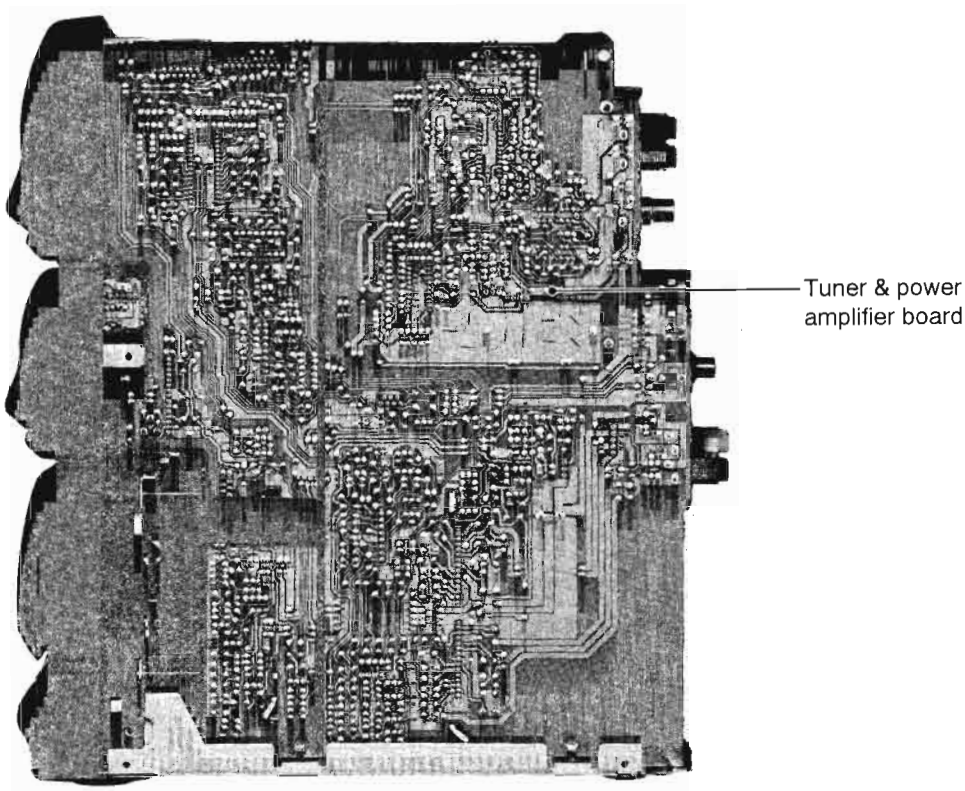
Tuner & power amplifier board

Fig. 4-4

5. Removal of Main Parts

■ How to Remove the Rear Cover (Refer to Figs. 5-1~5-4)

1. Remove the five screws (**1**) retaining the rear cover from the back of the body (Refer to Fig. 5-1).
2. Remove the three screws (**2**) retaining the rear cover from the right side of the body (Refer to Fig. 5-2).
3. Remove the one screw (30)retaining the rod antenna and take it out.
4. Remove the three screws (**3**) retaining the rear cover from the left side of the body (Refer to Fig. 5-3).
5. Remove the two screws (**4**) retaining the rear cover from just above the body (Refer to Fig. 5-4).

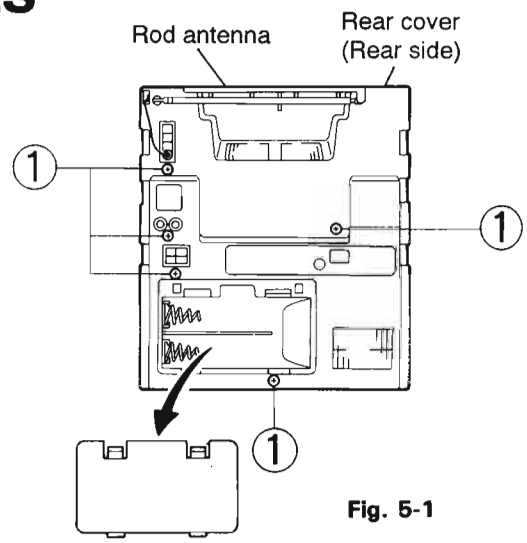

Fig. 5-1

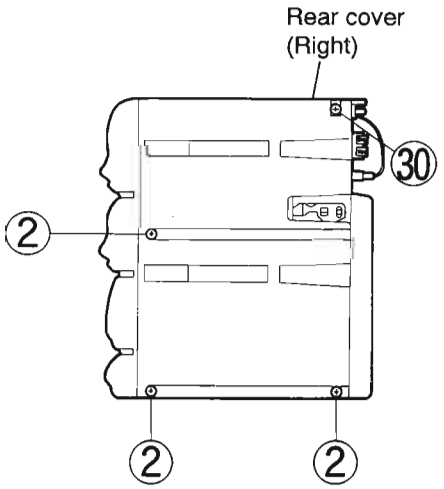

Fig. 5-2

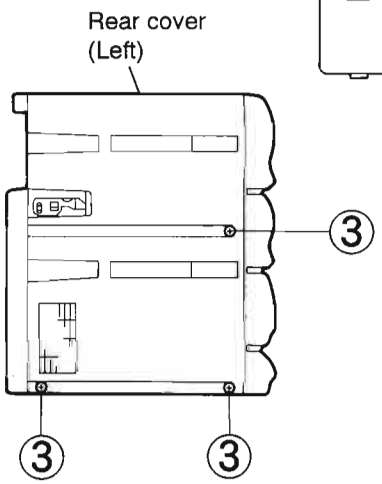

Fig. 5-3

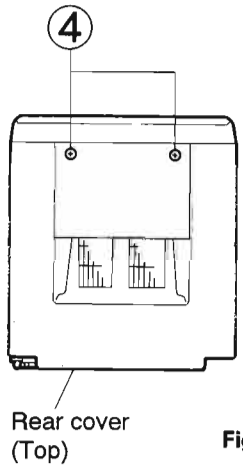

Fig. 5-4

■ How to Remove the Front Cover (Refer to Figs. 5-5~5-9)

1. Press the eject button of the cassette decks A and B, and open the cassette door (Refer to Fig. 5-5).
2. Remove the three screws (**5**) retaining the front cover ass'y as shown in Fig. 5-5.
3. Remove the two screws (**6**) retaining the right, left and lower sides of the front cover ass'y (Refer to Figs. 5-6 and 5-7).
4. Disengage the four engagements (**a, b, c** and **d**) fixing the right, left and lower sides of the front cover ass'y and the bottom of the ass'y (Refer to Figs. 5-6, 5-7 and 5-8).

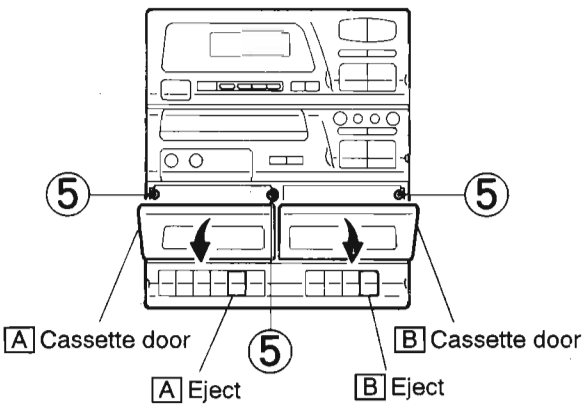

Fig. 5-5

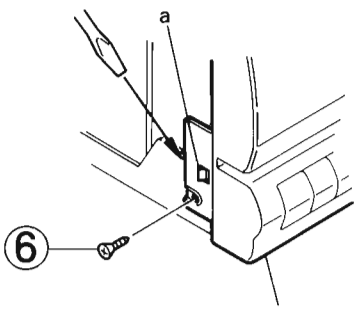

Fig. 5-6

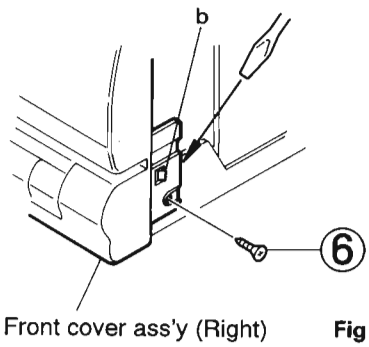

Fig. 5-7

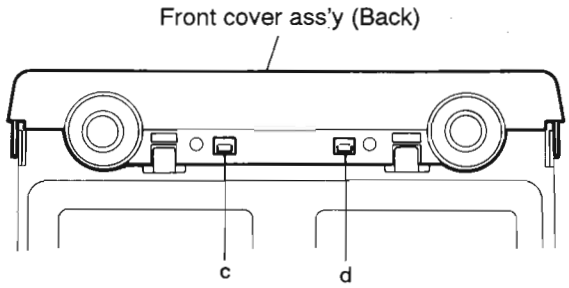

Fig. 5-8

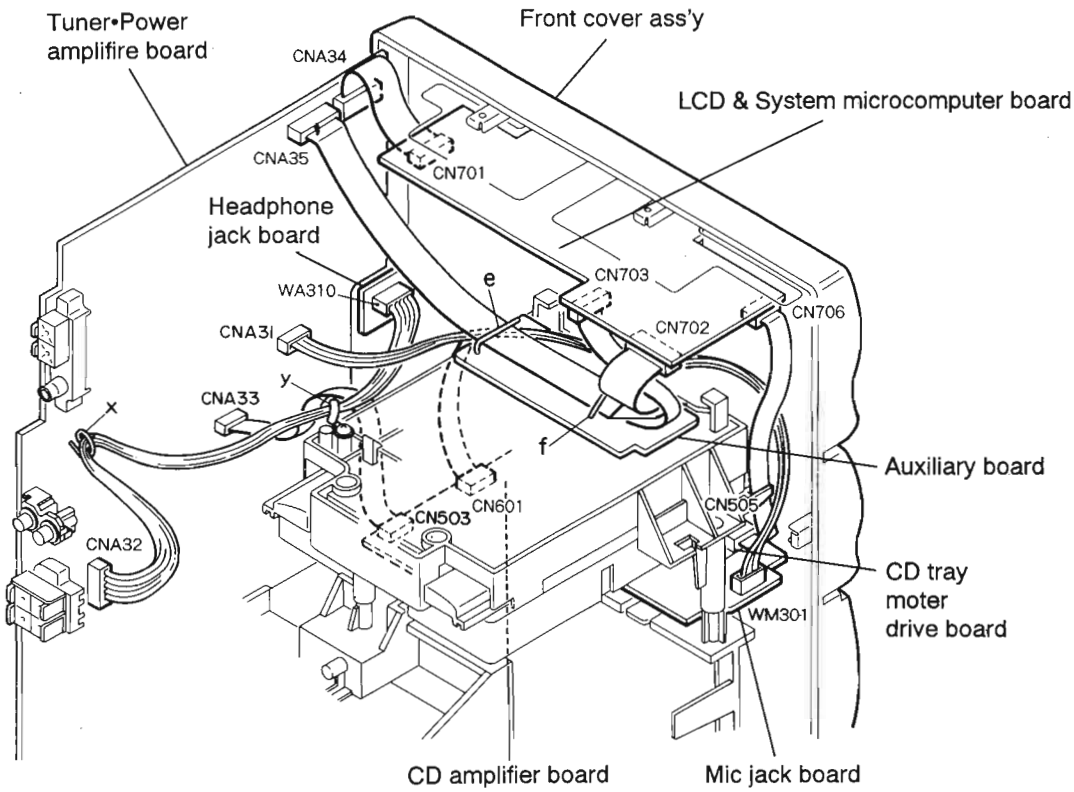

Fig. 5-9

5. From the connector CN703 on the system micro - computer P.C. board, remove the card wire outgoing from the connector CN601 on the CD amplifier P.C. board.
6. From connector CN702 on the LCD and system microcomputer P.C. board, remove the card wire outgoing from the connector CNA35 on the tuner power amplifier P.C. board (Refer to Fig. 5-9).
7. From the connector CN701 on the LCD and system microcomputer P.C. board, remove the card wire outgoing from the connector CNA34 on the tuner power amplifier P.C. board (Refer to Fig. 5-9).
8. From the connector CNA32 on the tuner power amplifier P.C. board, remove the 5 PIN connector outgoing from the connector WA310 on the headphone jack P.C. board. Also remove the 5 PIN connector wire from the two wire clamps (x and y).
9. From the connector CN706 on the LCD and system microcomputer P.C. board, remove the card wire outgoing from the connector CN505 on the CD tray motor drive P.C. board (Refer to Fig. 5-9).
10. From the connector CNA31 on the tuner power amplifier P.C. board, remove the 4 PIN connector outgoing from the connector WM301 on the MIC jack P.C. board. Then, remove the 4 PIN connector from the two wire clamps on the auxiliary P.C. board and dismout the front cover ass'y (Refer to Fig. 5-9).

■ How to Remove the Front Cover (Refer to Fig. 5-10)

1. Remove the rear cover ass'y (Refer to "How to Remove the Rear Cover").
2. Remove the front cover ass'y (Refer to "How to Remove the Front Cover Ass'y").
3. From the front cover, remove the four screws (**7**) retaining the LCD and system microcomputer P.C. board.
4. From the front cover, remove the twelve screws (**8**) retaining the control switch P.C. board together with the insulation sheet.
5. From the front cover, remove the two screws (**9**) retaining the brackets (**A** and **B**).
6. Remove the LCD and system microcomputer P.C. board and control switch P.C. board together from the front cover.
7. From the front cover, remove the two screws (**10**) retaining the headphone jack P.C. board.
8. From the front cover, remove the two screws (**11**) retaining the MIC jack P.C. board.
9. Remove miscellaneous buttons from the front cover.

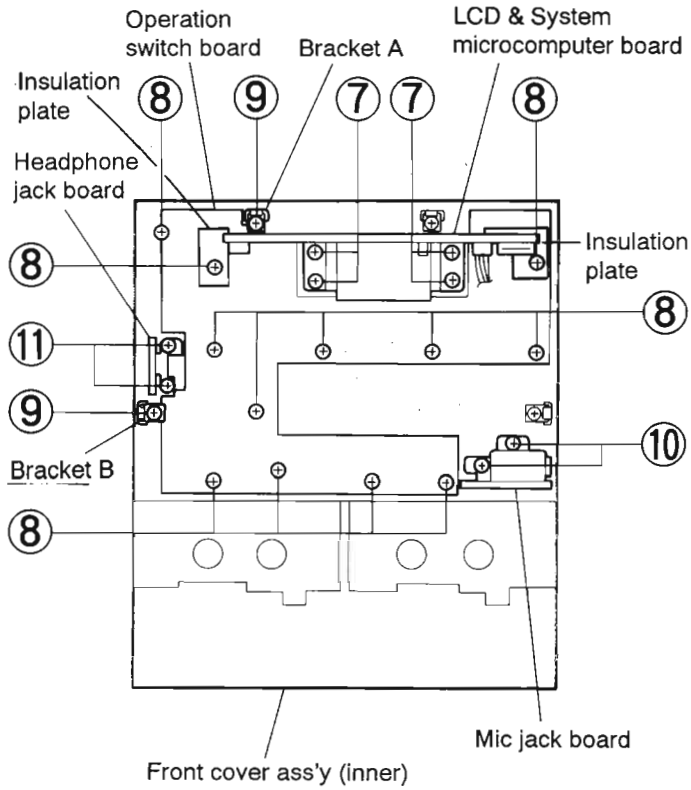

Fig. 5-10

■ How to Remove the CD Player Ass'y (Refer to Fig. 5-11)

1. Remove the rear cover (Refer to "How to Remove the Rear Cover").
2. Remove the front cover ass'y (Refer to "How Remove the Front Cover ass'y).
3. Remove the three screws (**12**) retaining the CD player ass'y.
4. From the connector CNA33 on the tuner power amplifier P.C. board, remove the card wire outgoing from the connector CN503 on the CD amplifier P.C. board

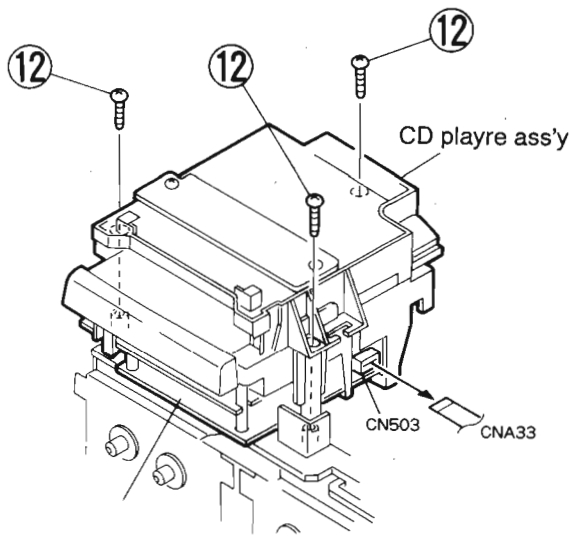

Fig. 5-11

■ How to Remove the CD Amplifier P.C. board (Refer to Fig. 5-12)

1. Remove the rear cover (Refer to "How to Remove the Rear Cover").
2. Remove the front cover ass'y (Refer to "How to Remove the Front Cover Ass'y").
3. Remove the CD player ass'y (Refer to "How to Remove the CD Player Ass'y").
4. Remove the two screws (14) retaining the CD amplifier P.C. board.
5. From the connector CN501 on the CD amplifier P.C. board, remove the card wire outgoing from the connector P001 on the CD pickup P.C. board.
6. From the connector CN502 on the CD amplifier P.C. board, remove the 6 PIN connector outgoing from the connector P001 on the CD motor drive P.C. board.

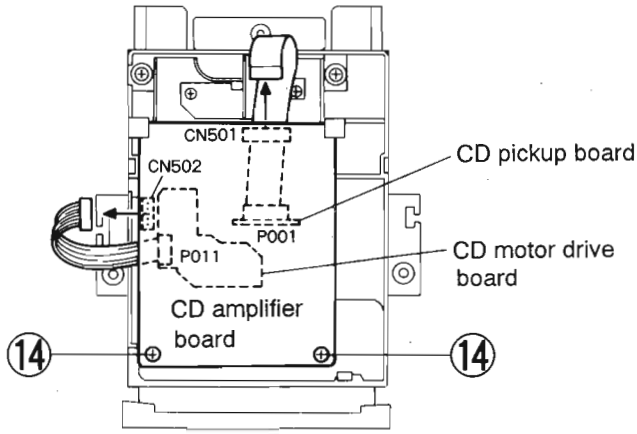

Fig. 5-12

■ How to Remove the CD Tray (Refer to Fig. 5-13)

1. Remove the rear cover (Refer to "How to Remove the Rear Cover").
2. Remove the front cover ass'y (Refer to "How to Remove the Front Cover Ass'y").
3. Remove the CD player ass'y (Refer to "How to Remove the CD Player Ass'y").
4. Remove the CD amplifier P.C. board (Refer to "How to Remove the CD Amplifier P.C. Board").
5. Remove the two screws (**15**) playing a role of CD tray stopper.
6. Insert the driver into the hole (**g**) on the CD motor drive P.C. board and turn it in the arrow direction as shown in Fig. 5-3.Then, the CD mechanism will be raised in the arrow direction.
7. Pull out the CD tray in the arrow direction.

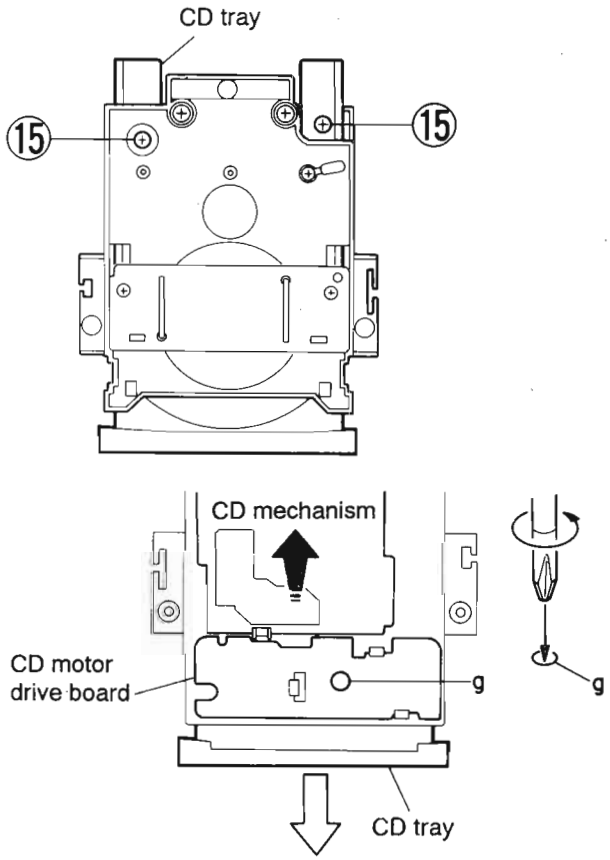

Fig. 5-13

■ How to Remove the CD Clamper Base Ass'y (Refer to Fig. 5-14)

1. Remove the rear cover (Refer to "How to Remove the Rear Cover").
2. Remove the front cover ass'y (Refer to "How to Remove the Front Cover Ass'y).
3. Remove the CD player ass'y (Refer to Items 3 and 4 of "How to Remove the CD Player Ass'y).
4. Remove the CD tray (Refer to "How to Remove the CD Tray").
5. From the loading base ass'y, remove the four screws (**18**) retaining the CD clamper base.
6. While raising the CD clamper base from the rear part, remove both of the claws (**H** and **I**) in front loading base ass'y (Refer to the expansion diagrams C and D).

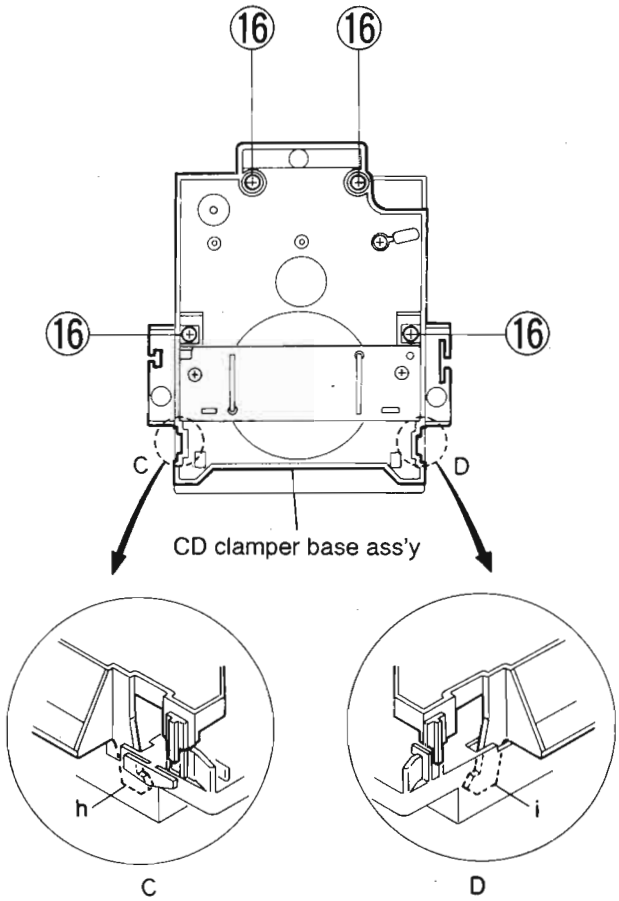

Fig. 5-14

■ How to Remove the CD Mechanism Ass'y (Refer to Fig. 5-15)

1. Remove the rear cover (Refer to "How to Remove the Rear Cover").
2. Remove the front cover ass'y (Refer to "How to Remove the Front Cover Ass'y").
3. Remove the CD player ass'y (Refer to Items 3 and 4 of "How Remove the CD Player Ass'y").
4. Remove the two screws with springs (**17**) retaining the CD mechanism ass'y. For reassembly, mount the CD mechanism ass'y while inserting the shaft at the upper part of the ass'y into the slide groove (E).

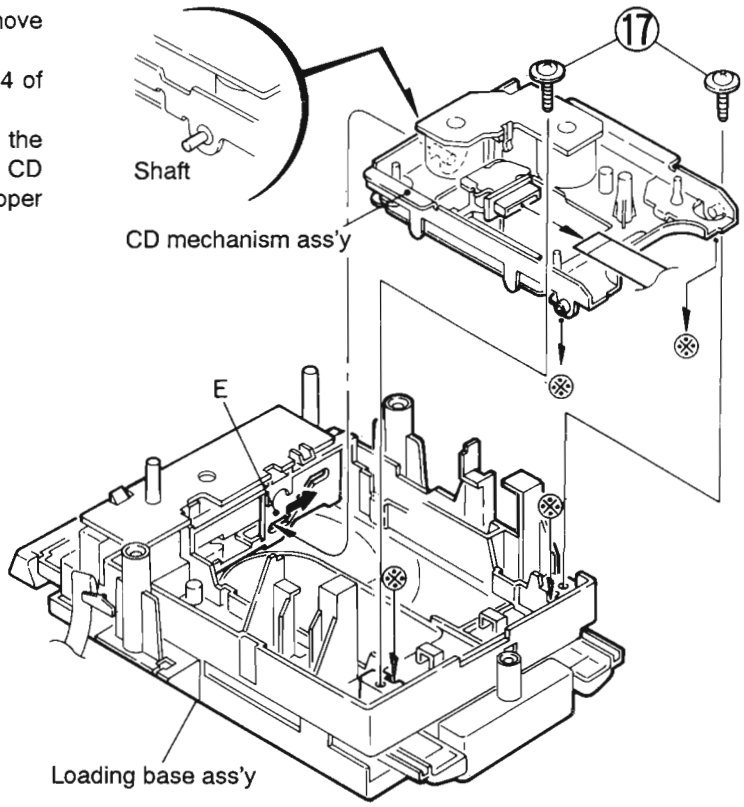

Fig. 5-15

■ How to Remove the CD Tray Drive Motor and its P.C.board (Refer to Figs. 5-16 and 5-17)

1. Remove the rear cover (Refer to "How to Remove the Rear Cover").
2. Remove the front cover ass'y (Refer to "How to Remove the Front Cover Ass'y".
3. Remove the CD player as'y (Refer to Items 3 - 6 of "How to Remove the CD Player Ass'y").
4. Remove the CD tray (Refer to Items 4 - 6 of "How to Remove the CD Tray").
5. Remove the CD amplifier P.C. board (Refer to Items 4 - 6 of "How to Remove the CD amlifier P.C. board").
6. From the loading base ass'y, remove the two screws (**18**) retaining the CD drive motor.
7. Remove the belt from the CD tray drive motor.
8. After turning over the loading base ass'y, remove the ass'y while expanding the three claws (**J, k** and **n**) retaining the CD tray motor drive P.C. board in the arrow direction.
9. While raising the CD tray motor drive P.C. board, remove the two soldered positions (**l** and **m**) of the CD tray drive motor.

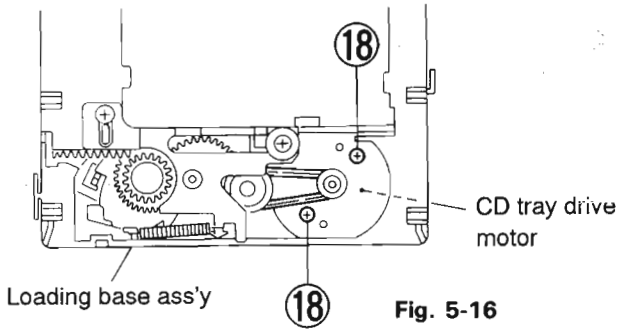

Fig. 5-16

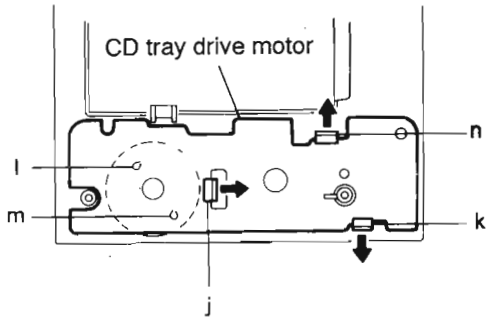

Fig. 5-17

■ How to Remove the Tuner Power Amplifier P.C. board (Refer to Figs. 5-18 and 5-19)

1. Romove the rear cover (Refer to "How to Remove the Rear Cover").
2. Remove the front cover ass'y (Refer to "How to Remove the Front Cover Ass'y").
3. Remove the CD Player ass'y (Refer to "How to Remove the CD Player Ass'y").
4. Remove the three screws (**19**) retaining the tuner power amplifier P.C. board.
5. From the connector CN803 on the power P.C. board, remove the 3 PIN connector outgoing from the connector W301 on the tuner power amlifier P.C. board.
6. From the connector CN303 on the preamplifier P.C. board, remove the card wire outgoing from the connector CNA38 on the tuner power amplifier P.C. board.
7. From the connector CNA37 on the tuner power amplifier P.C. board, remove the 15 PIN connector outgoing from the leaf switch of the cassette mechanism.

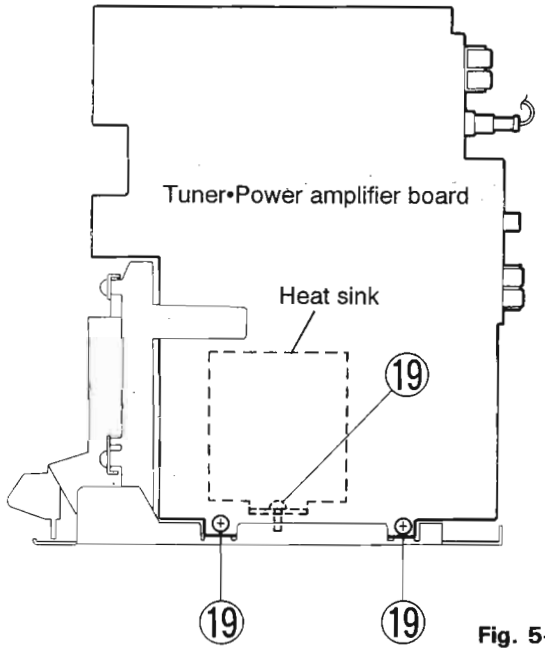

Fig. 5-18

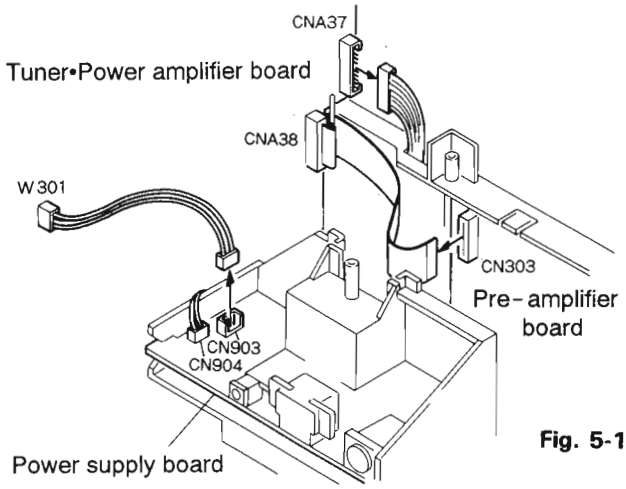

Fig. 5-19

■ How to Remove the Cassette Mechanism Ass'y (Refer to Figs. 5-20 and 5-21)

1. Remove the rear cover (Refer to "How to Remove the Rear Cover").
2. Remove the front cover ass'y (Refer to "How to Remove the Front Cover Ass'y").
3. Remove the CD player ass'y (Refer to "How to Remove the CD Player Ass'y").
4. Remove the tuner power amplifier P.C. board (Refer to "How to Remove the Tuner Power Amplifier P.C. board").
5. Remove the three screws (**20**) retaining the cassette mechanism ass'y together with the shield plate.
6. Disengage the three engagements (**o, p** and **q**) retaining the cassette mechanism ass'y from the chassis base while shifting the ass'y in the arrow direction.

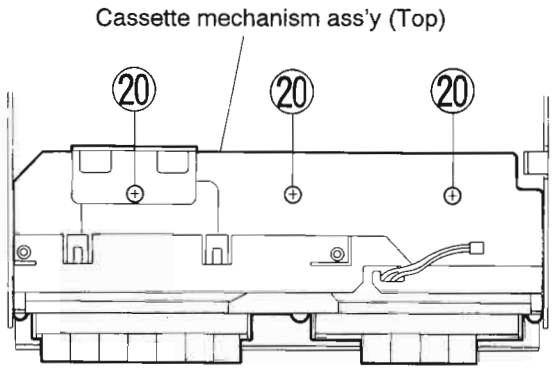

Fig. 5-20

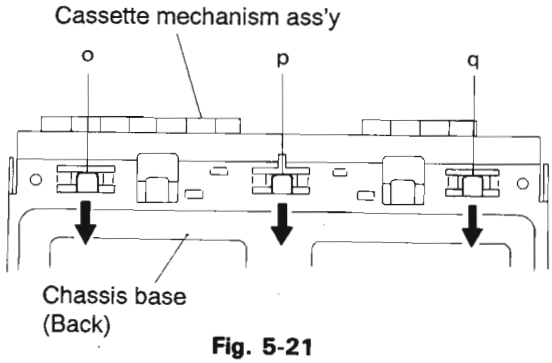

Fig. 5-21

■ How to Remove the Cassette Mechanism (Refer to Figs. 5-22 and 5-23)

1. Remove the rear cover (Refer to "How to Remove the Rear Cover").
2. Remove the front cover ass'y (Refer to "How to Remove the Front Cover Ass'y").
3. Remove the CD player ass'y (Refer to "How to Remove the CD Player Ass'y").
4. Remove the cassette mechanism ass'y (Refer to "How to Remove the Cassette Mechanism Ass'y").
5. Remove the 15 PIN connector from the notch on the mechanism chassis.
6. Remove the four screws (**21**) retaining the cassette mechanism.
7. From the connector CN302 on the pre-amplifier P.C. board, remove the 7 PIN connector outgoing from the record and play head of the mechanism A.
8. From the connector CN301 on the preamplifier P.C. board, remove the 3 PIN connector outgoing from the play head of the mechanism B.

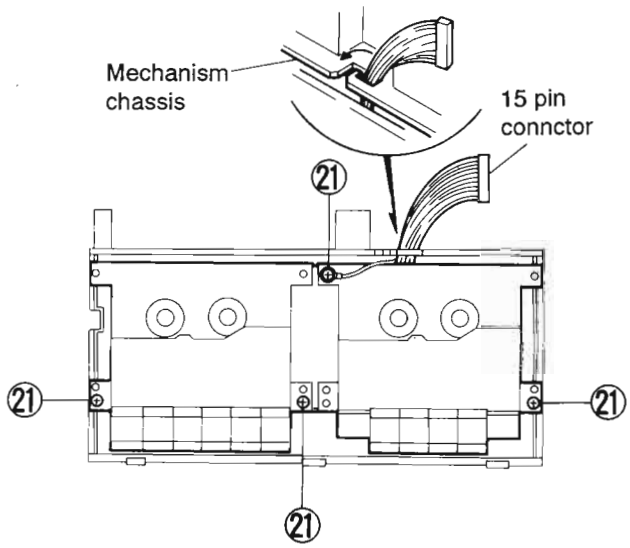

Fig. 5-22

■ How to Remove the Pre- amplifier P.C. Board (Refer to Fig. 5-23)

1. Remove the rear cover (Refer to "How to Remove the Rear Cover").
2. Remove the front cover ass'y (Refer to "How to Remove the Front Cover Ass'y").
3. Remove the CD player ass'y (Refer to "How to Remove the CD Player Ass'y").
4. Remove the cassette mechanism ass'y (Refer to "How to Remove the Cassette Mechanism Ass'y").
5. Remove the one screw (**22**) retaining the pre- amplifier P.C. board.
6. Remove the claws (**r** and **s**) on the mechanism chassis retaining the pre- amplifier P.C. board while moving the claws in the arrow direction.
7. From the notch on the mechanism chassis, disengage the two engagements (**t** and **u**) retaining the pre- amplifier P.C. board.

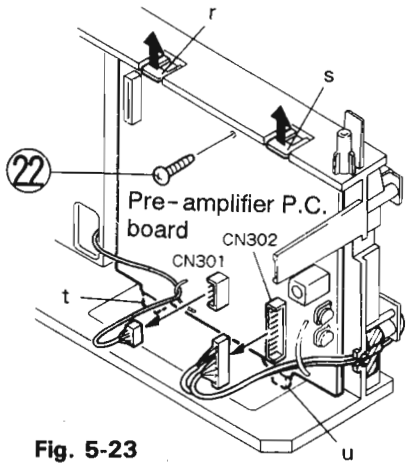

Fig. 5-23

■ How to Remove the Power P.C. Board and Power Transformer

(Refer to Figs. 5-24 ~5-27)

1. Remove the rear cover (Refer to "How to Remove the Rear Cover").
2. Remove the front cover ass'y (Refer to "How to Remove the Front Cover Ass'Y").
3. Remove the CD player ass'y (Refer to "How to Remove the CD Player Ass'y").
4. Remove the one screw (**23**) retaining the power P.C. board.
5. From the connector CN902 on the power P.C. board, remove the 2 PIN connector (red wire) outgoing from the power transformer. Similarly, remove another 2 PIN connector (brown and white wires) from the connector CN901.
6. After pulling the power P.C. board to the front side, remove the board from the engagements (**v** and **w**) on both sides of the power source chassis.
7. Remove the screw (**24**) retaining the power source chassis.
8. While pulling out the power source chassis diagonally to the front side, disengage the engagements (**x** and **y**).
9. Remove the four screws (**25**) retaining the power transformer.

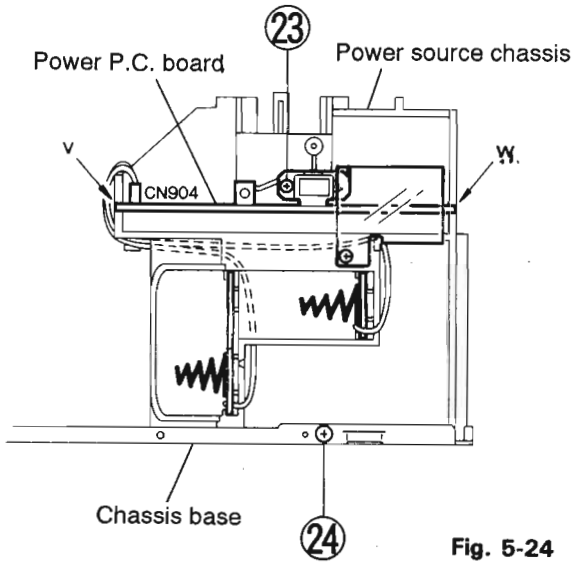

Fig. 5-24

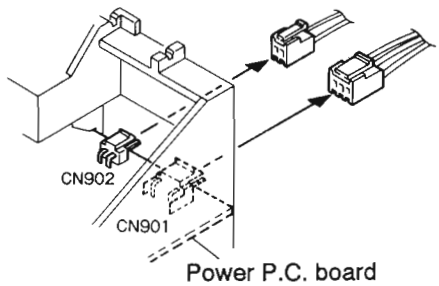

Fig. 5-25

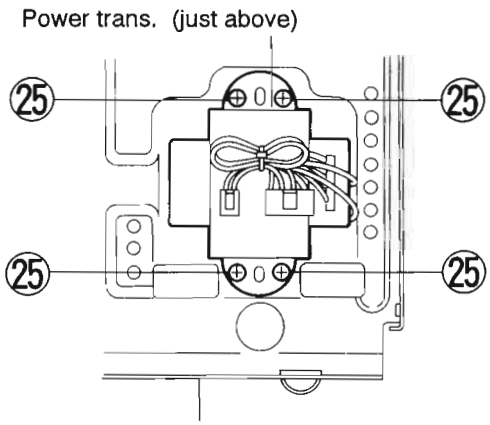

Fig. 5-26

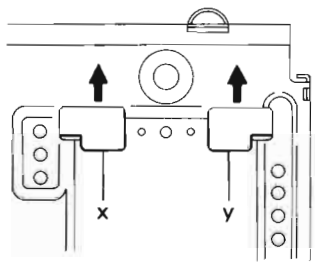

Fig. 5-27

■ How to Remove the Motor Pulley Ass'y

(Refer to Figs. 5-28 ~ 5-30).

1. Remove the rear cover (Refer to "How to Remove the Rear Cover").
2. Remove the front cover ass'y (Refer to "How to Remove the front Cover Ass'y").
3. Remove the CD player ass'y (Refer to "How to Remove the CD Player Ass'y").
4. Remove the tuner power amplifier ass'y (Refer to "How to Remove the Tuner Power Amplifier Ass'y").
5. Remove the cassette mechanism ass'y (Refer to "How to Remove the cassette Mechanism Ass'y").
6. After turning over the cassette mechanism ass'y, remove the six screws (**26**) retaining the motor bracket.
7. Insert a minus screw driver between the opening between the two engagements (**G** and **H**) retaining the motor bracket and chassis ass'y, and remove the bracket and ass'y.
8. Remove the two belts (ⓐ and ⓑ) hanged between the motor pulley ass'y and the flywheels of cassette mechanisms A and B (Caution: Remove the belts so carefully that these belts are not contaminated by oil,ase and so forth).
9. Remove the three screws (**27**) retaining the motor pulley ass'y.

■ How to Remove the Flywheel (Refer to Figs. 5-31 and 5-32)

1. Remove the rear cover (Refer to "How Remove the Rear Cover").
2. Remove the front cover ass'y (Refer to "How to Remove the Front Cover Ass'y").
3. Remove the CD player ass'y (Refer to "How to Remove the CD Player Ass'y").
4. Remove the tuner power amplifier ass'y (Refer to "How to Remove the Tuner Power amplifier Ass'y").
5. Remove the cassette mechanism ass'y (Refer to "How to Remove the Cassette Mechanism Ass'y").
6. Remove the motor pulley ass'y (Refer to "How to Remove the Motor Pulley Ass'y").
7. Remove the belt ⓒ hanged between the RF clutch and flywheel.
8. Remove the washer and ring attached to the capstan shaft as shown in Fig. 5-33.

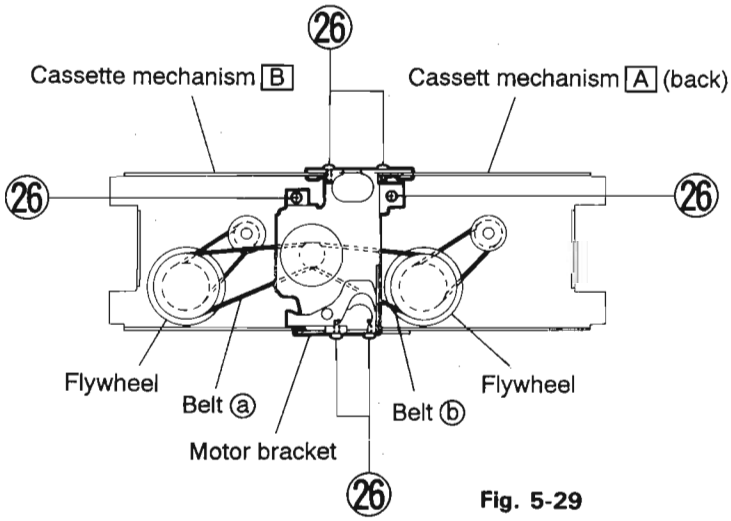

Fig. 5-29

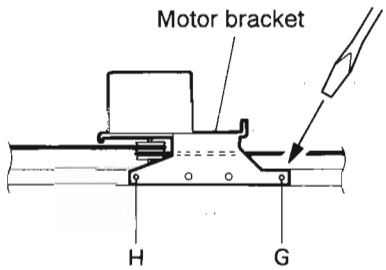

Fig. 5-30

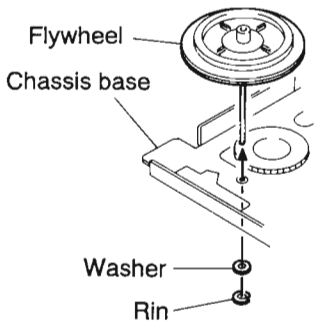

Fig. 5-33

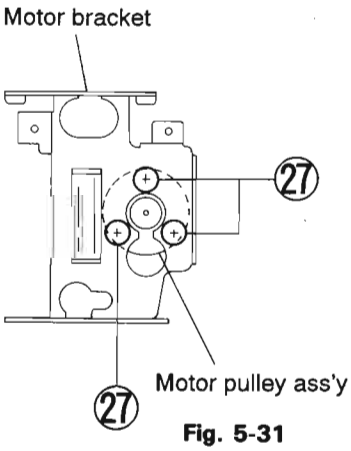

Fig. 5-31

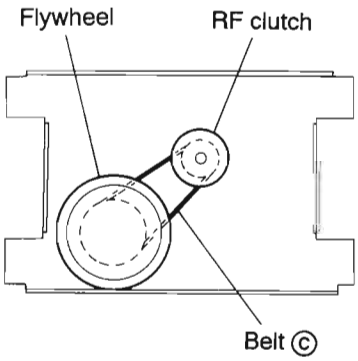

Fig. 5-32

6. Main Adjustment

■ Test Instruments required for adjustment

1. Low frequency oscillator
   (Frequency range: 50Hz to 20kHz)
   (Output : 0 dBs across 600 Ω terminating resistor)
2. Attenuator(Impedance : 600 Ω)
3. Test Tapes
   VTT712 ····· For tape speed,wow and flutter measurement
   VTT724 ·····For playback output level measurement
   VTT736 ····· For playback frequency response check response check
   VTT703 ····· For head azimuth adjustment
4. Blank tapes
   Normal :AC224
   Chrome : AC513
5. Electronic voltmeter,
6. Distortion meter
7. Frequency counter
8. Wow and flutter meter
9. Torque gauge : CTG – K
   (Cassette type) ····· For mechanism adjustment

■ Measuring conditions (Amplifier section)

Supply voltage ·····AC230V (50Hz)
Reference output ·····Speaker 0 dBs (0.775V) / 8 Ω
Headphone: – 23 dBs (0.5755V)/ 32 Ω
Reference input level····· – 25dBs(AUX)
64dB(MIX MIC)
to test point
Standard test frequency····· 1kHz
Output measuring point ····· Speaker terminal
: Dummy load 3 Ω
:Test point CN301
or headphone(32 Ω)

● Standard position of switches

Active hyper bass switch·····OFF

● Standard position of controls

Main volume adjust ····· 0 dBs output (about VOL.29)

● Test remarks

1. Negative side of the input and output terminals of the testing set, shall be isolated from each other. The negative side should not be commonly connect ed when a 2channel electronic voltmeter is connected.
2. A dummy load shall be connected to the output terminal and the lead wires of dummy load shall be as thick as possible.

■ Measuring condition (Tuner section)

Power supply voltage to tuner····· DC 5.7V
Reference output ····· Speaker : 50mW(0.39 V / 3 Ω)
Headphon : 0.06V/ 32 Ω
AM modulation ·····400Hz, 30%
FM modulation ·····400Hz deviation 22.5kHz

● Standard position of switches and controllers

Function·····RADIO
Mode ····· STEREO

● Remarks for alignment

1. Connect 30 pF capacitor and 33 k Ω resistor to the output terminal of the IF sweeper in series while 0.082 μ F capacitor and 100k Ω resistor to the input terminal in series.
2. Set the output level of the IF sweeper as low as adjustable.
3. IF alignment is not necessory for both AM and FM MPX alignment is not necessory either. All IFTs and MPX coil are non-adjusting type.

■ Arrangement of adjust

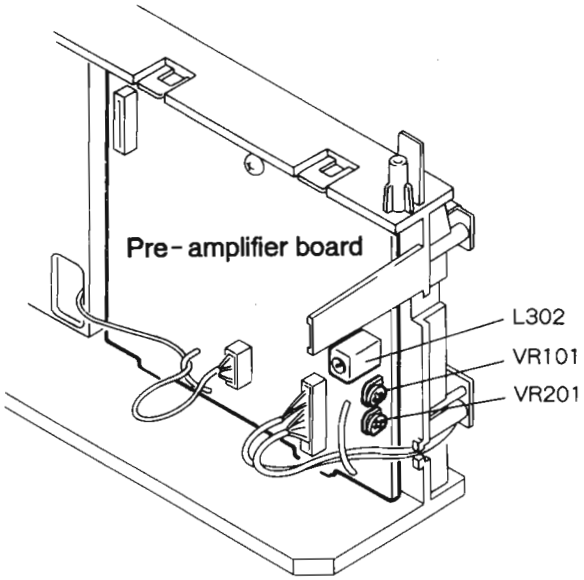

Fig. 6-1

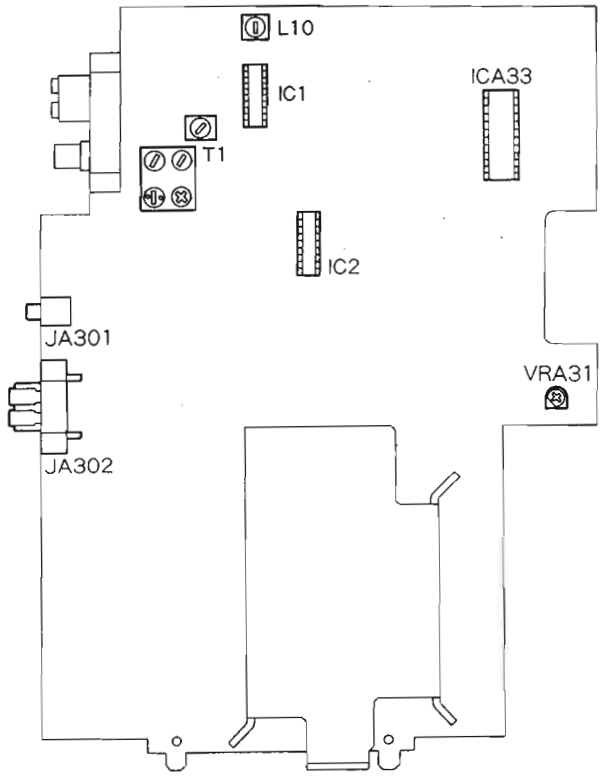

Tuner & Power amplifier board

Fig. 6-2

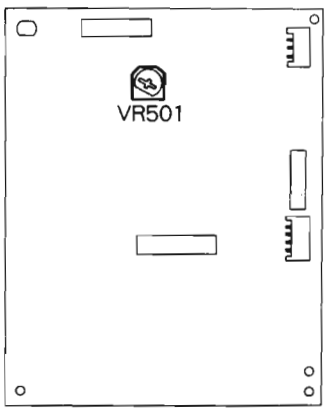

CD amplifier board

Fig. 6-3

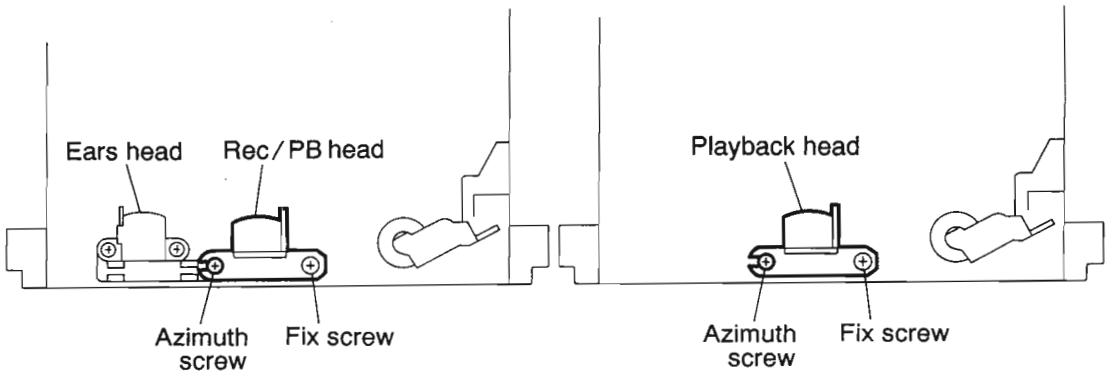

"A" Mechanism

"B" Mechanism

Fig. 6-4

■ How to connect the Extension Cable for Adjustment and Confirmation

Step 1: Remove the rear cover (Refer to "How to Remove the Rear Cover").
Step 2: Remove the front cover ass'y (Refer to "How to Remove the Front Cover Ass'y).
Step 3: Remove the CD player ass'y (Refer to "How to Remove the CD Player Ass'y).
Step 4: With the extension 4PIN connector, connect the 4PIN connector outgoing from the connector WM301 on MIC jack P.C. board and the connector CNA31 on the tuner and power amplifier P.C. board.
Step 5: From the connector CN505 on the CD player drive motor P.C. board, remove the card wire outgoing from the connector WM301 on the MIC jack P.C. board, and connect the extension 7PIN connector instead.
Step 6: From the connector CNA33 on the tuner and power amplifier P.C. board, remove the 7PIN connector outgoing from the connector CN603 on the CD amplifier P.C. board, and connect the extension 7PIN connector instead.
Step 7: From the connector CN703 on the system microcomputer P.C. board, remove the card wire outgoing from the connector CN601 on the CD amplifier P.C. board, and connect the extension 9PIN card wire instead.
Step 8: From the connector CNA34 on the tuner and power amplifier P.C. board, remove the card wire outgoing from the connector CN701 on the system microcomputer P.C. board, and connect the extension 7PIN card wire instead.

■ No. and Breakdown of Extension Cable Parts: EXTHX5-JIG

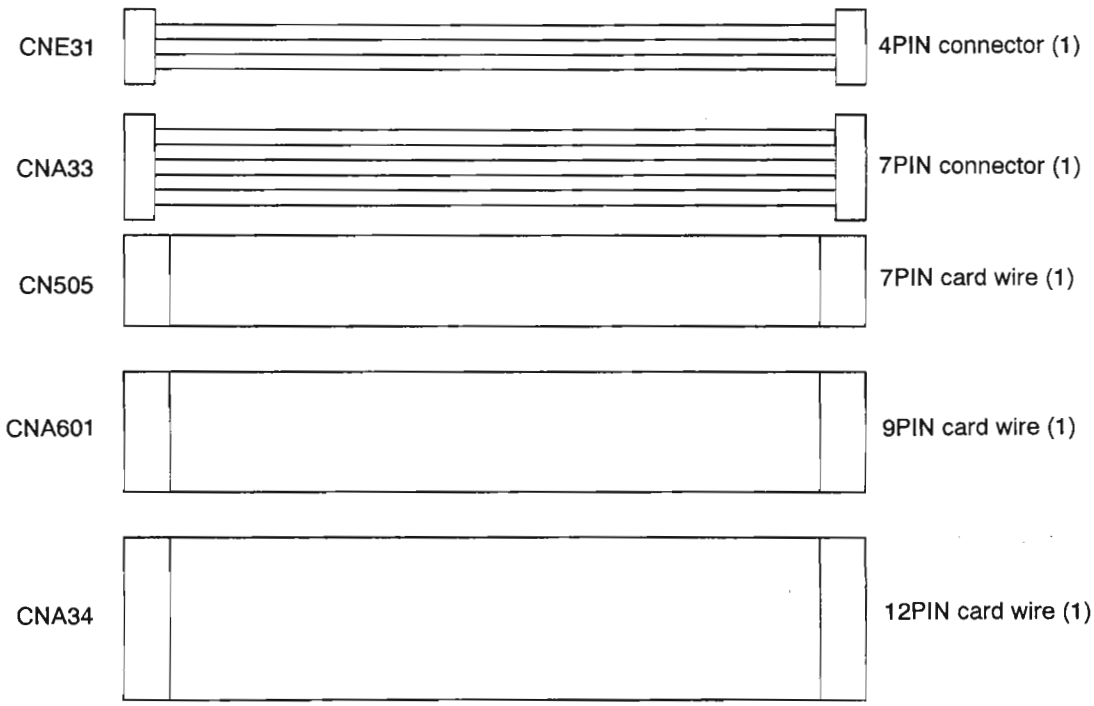

■ Tepe Recrder Section

Item	Conditions	Adjustment and confirmation method	Stand. value	Adjusting
Adjustment of head angle	Test tape : VTT703L (10kHz) Measurement output terminal : Headphone terminal	(1) Play the test tape VTT703L (10kHz) (2) Adjust the head azimuth screw so that the phase difference between both of the decks A and B becomes minimum within 2dB from the maximum output point. After adjustment, lock the head azimuth screw over more than half its peripheral.	Minimum phase difference within 2dB from maximum output point	Adjust the head azimuth screw only when the head has been changed.
Adjustment and confirmation of tape speed and wow flatter	Test tape : VTT712 (3kHz) Measurement output terminal : Headphone terminal	(1) Adjust VRA31 so that the frequency counter reading becomes 3,010 Hz ± 10 Hz or less when the test tape VTT712 (3 kHz) is played in the deck A after the tape has been winded completely. When played in the deck B, the frequency counter reading should be 3,010 Hz ± 60 Hz. (2) The wow flatter should be 0.4% with in (JIS UNWRMS).	(1) Deck A : 3,010 Hz ± 10 Hz Deck B : 3,010 Hz ± 60 Hz (2) 0.4% or with in (JIS UNWRMS)	VRA31
Comfirmation of replay output	Test tape : VTT724 (1kHz) Measurement output terminal : Headphone terminal	Confirm that the output deviation between the terminals L and R is 4dB or less when the test tape VTT24 (1kHz) is played in the Deck A.	Output deviation between terminals L and R : 4dB or less	
Confirmation of replay frequency characteristics	Test tape : VTT739 Measurement output terminal : Headphone terminal	Confirm that the output from both decks A and B is within – 5dB ± 4dB at 63Hz and within 0dB ± 3dB at 10kHz with reference to 1kHz when the test tape VTT739 is replayed.		
Adjustment of bias oscillation frequency	Test tape : AC513	(1) After setting the test tape (AC513) into the deck A, record the tape and keep it at [PAUSE]. (2) Put the frequency counter (with 470kΩ resistor) on the test point and measure the bias oscillation frequency. (3) Adjust L302 so that the frequency counter value becomes 103.5kHz ± 0.15kHz.		L302
Adjustment of recording and replay frequency characteristics	Reference frequency : 1kHz and 10kHz (REF. – 20dB) Test tape : AC224 (Normal) AC513 (Chrome) Measurement input terminal : [AUX IN] terminal Measurement output terminal : Headphone terminal	(1) Input the reference frequencies of 1kHz and 10kHz to the [AUX IN] terminal. (2) Adjust VR101 of Lch and VR201 of Rch so that the deviation of headphone output becomes -1dB ± 1dB at 1kHz and 10kHz when the test tape (ACC224) is recorded and replayed. (3) Test tape (AC513)... 1kHz/10kHz : -1dB ± 4dB	1k/10kHz AC224 : – 1dB ± 1dB ACS13 : – 1dB ± 4dB	Lch :VR101 Rch :VR201

Item	Conditions	Adjustment and confirmation method	Stand. value	Adjusting
Confirmation of recording and replaying sensitivity	Reference frequency : 1kHz Test tape : AC224 Measurement output terminal : Headphone terminal Measurement input terminal : [AUX IN] terminal	Confirm that the deviation between the output level of the test tapes AC224 and VTT724 is within 0dB ± 4dB when the reference frequency of 1kHz is recorded and replayed through the [AUX IN] terminal.	AC224 :0dB ± 4dB	

■ Tuner Section

Adjustment of FM and AM IF Adjustment of MPX Adjustment of FM tracking		* There is no need to adjust these IFs since fixed IF elements used. * There is no need to adjust this MPX since a ceramic oscillator is used. * There is no need to adjust FM tracking since a fixed coil is used.		

■ CD Player Section

Adjustment of tracking offset	Test disk: CTS1000 Oscilloscope	1. Connect the oscilloscope between TP503 (hot side) and TP502 (Vref side). 2. After connecting the terminls of the connectors CN503 ① and ④, apply 10V to the terminals ②. 3. Replay the test disk. 4. Connect (short circuit) TP504 and TP502. 5. Adjust VR501 so that the DC level of tracking error signal (waveform of oscilloscope) becomes zero. Notes 1) Adjust VR501 so that the waveform becomes vertically symmetrical with reference to the zero level. 2) The oscilloscope input should be DC-connected. **Tracking offset waveform** 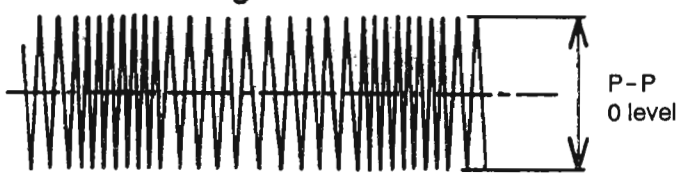 	Set the center of P-P to the DC zero lebel	VR501

■ Self – Diagnosis Functoin of CD

1. Purpose

This function is designed to display an error to readily clarify the cause of such an error should any trouble occur in CD.

2. How to Use the Function

(1) Turn the microcomputer action of the set to [TEST] mode.

(2) Press [POWER] + [+10] + [□ /CLEAR] on the remote controller at the same time. Confirm that all of the LCDs have been turned on when set to the [TEST] mode subsequent to the step in Item (2).

(3) Whe the CD trouble has occurred after starting CD, an error code will be desplayed on the display section of LCD, etc.

3. Error code and location in trouble

(See Figs. 6 – 5~6 – 9)

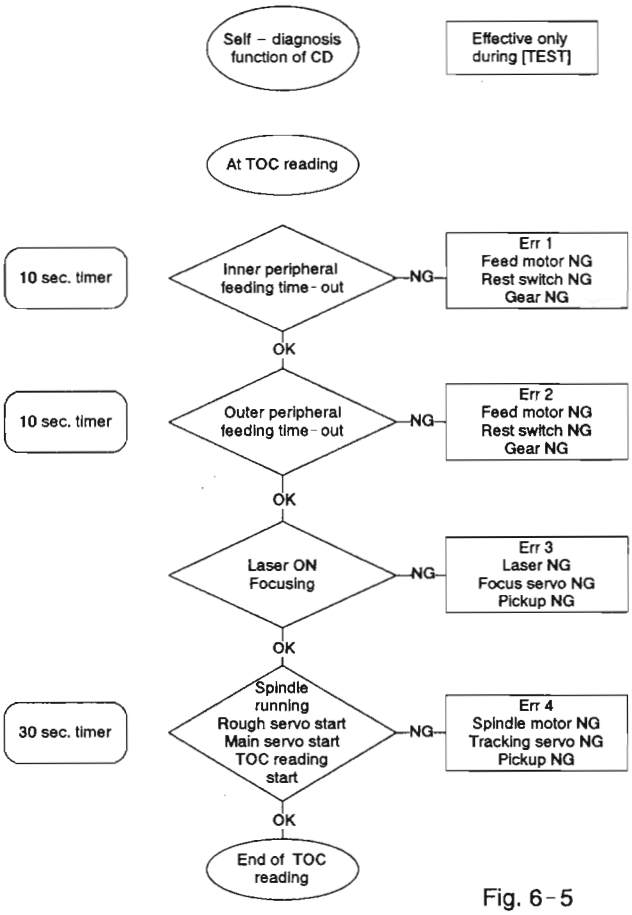

Fig. 6-5

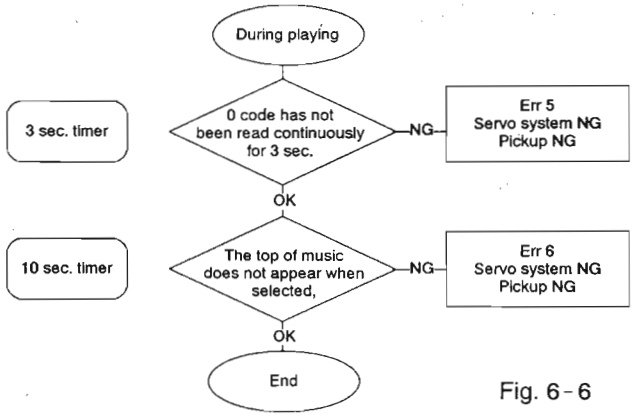

Fig. 6-6

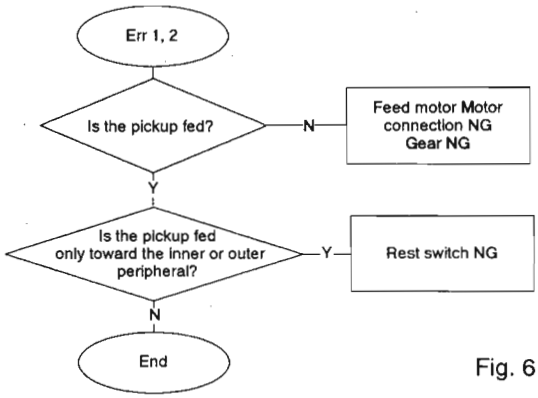

Fig. 6-7

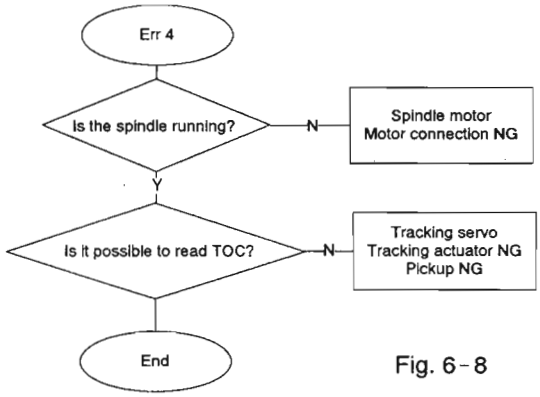

Fig. 6-8

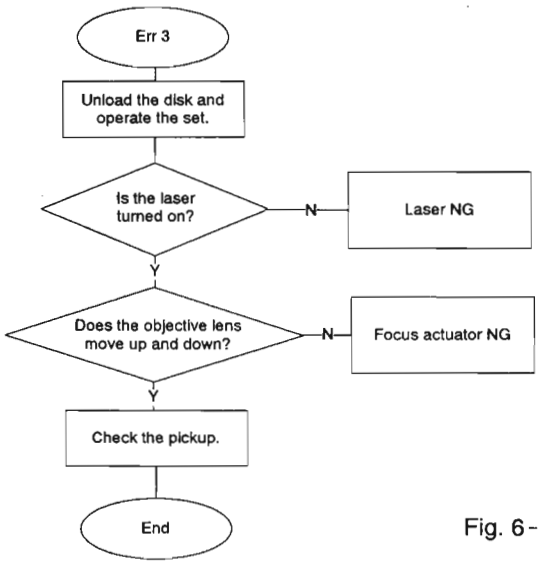

Fig. 6-9

7. Troubleshooting

General descriptions of TOC (Table of Contents) readings

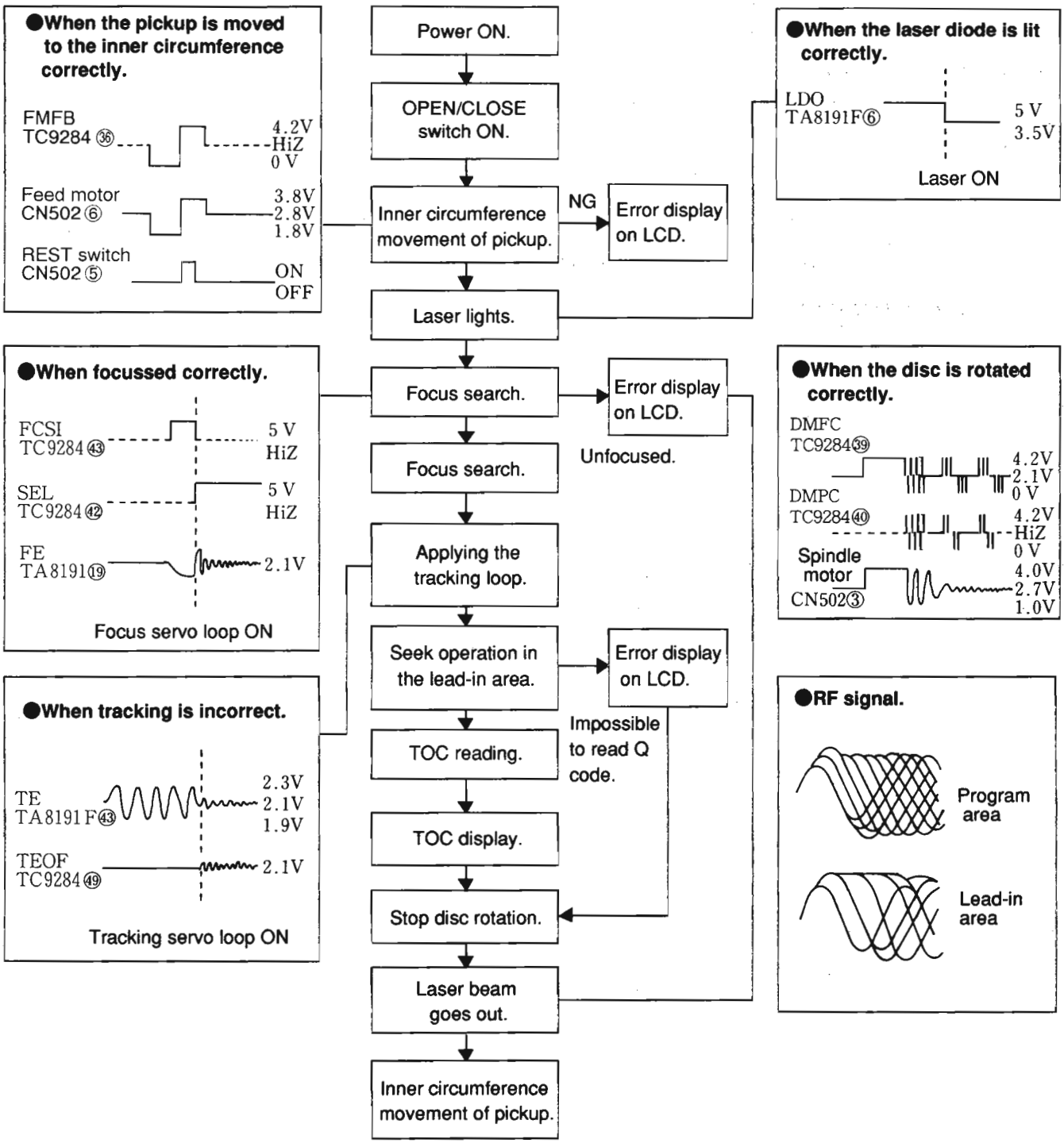

Fig. 7-1

■General section

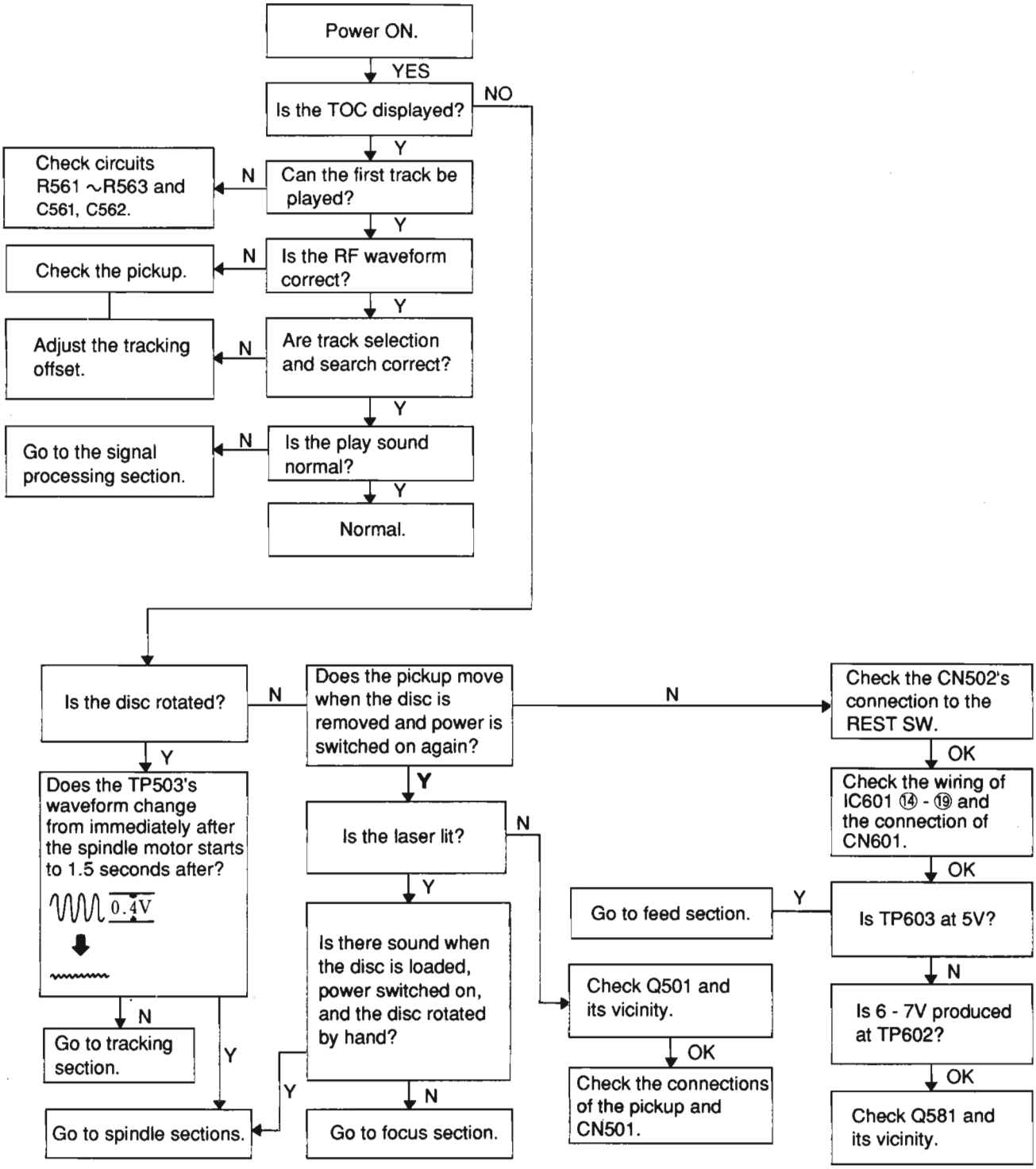

Fig. 7-2

■ Feed section

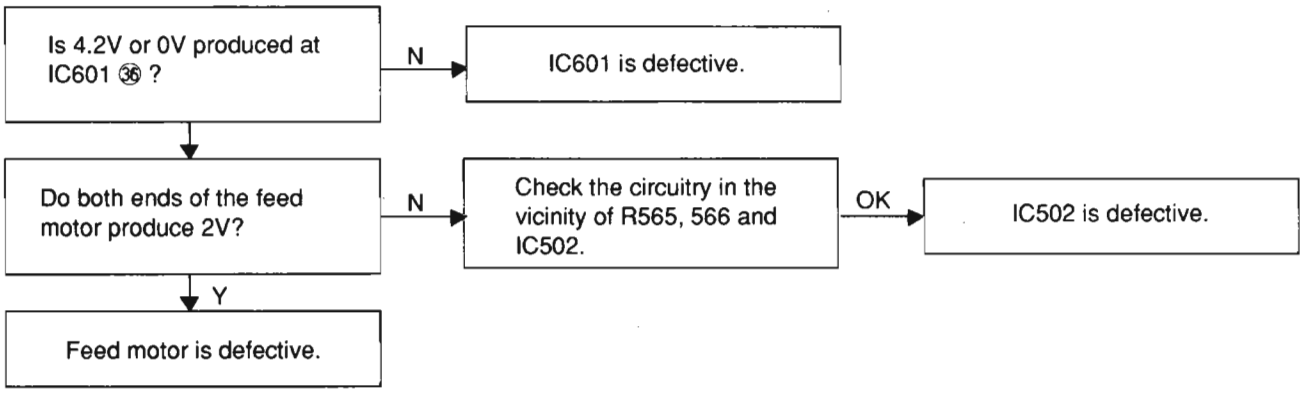

Fig. 7-3

■ Focus section

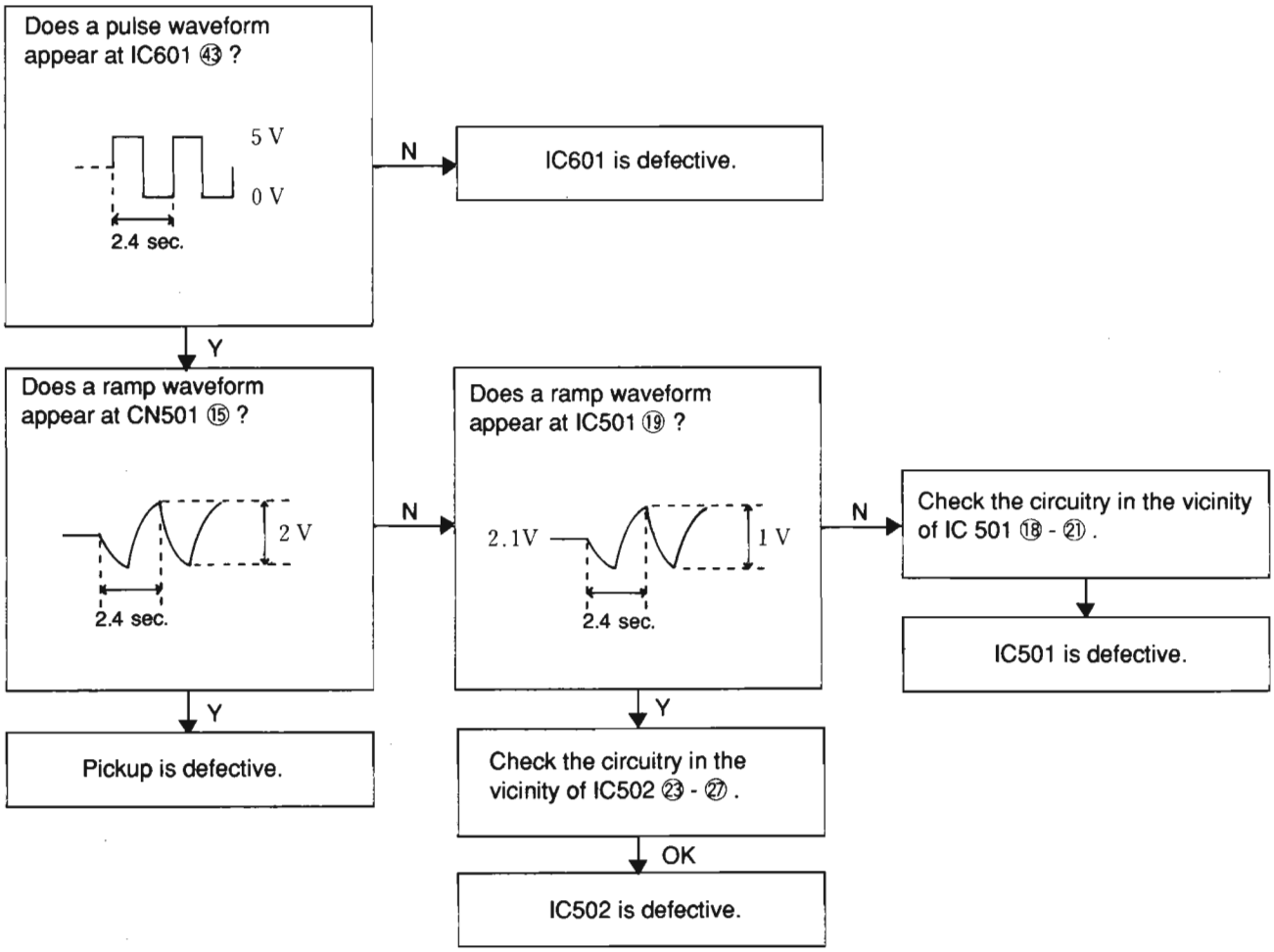

Fig. 7-4

■ Spindle motor section

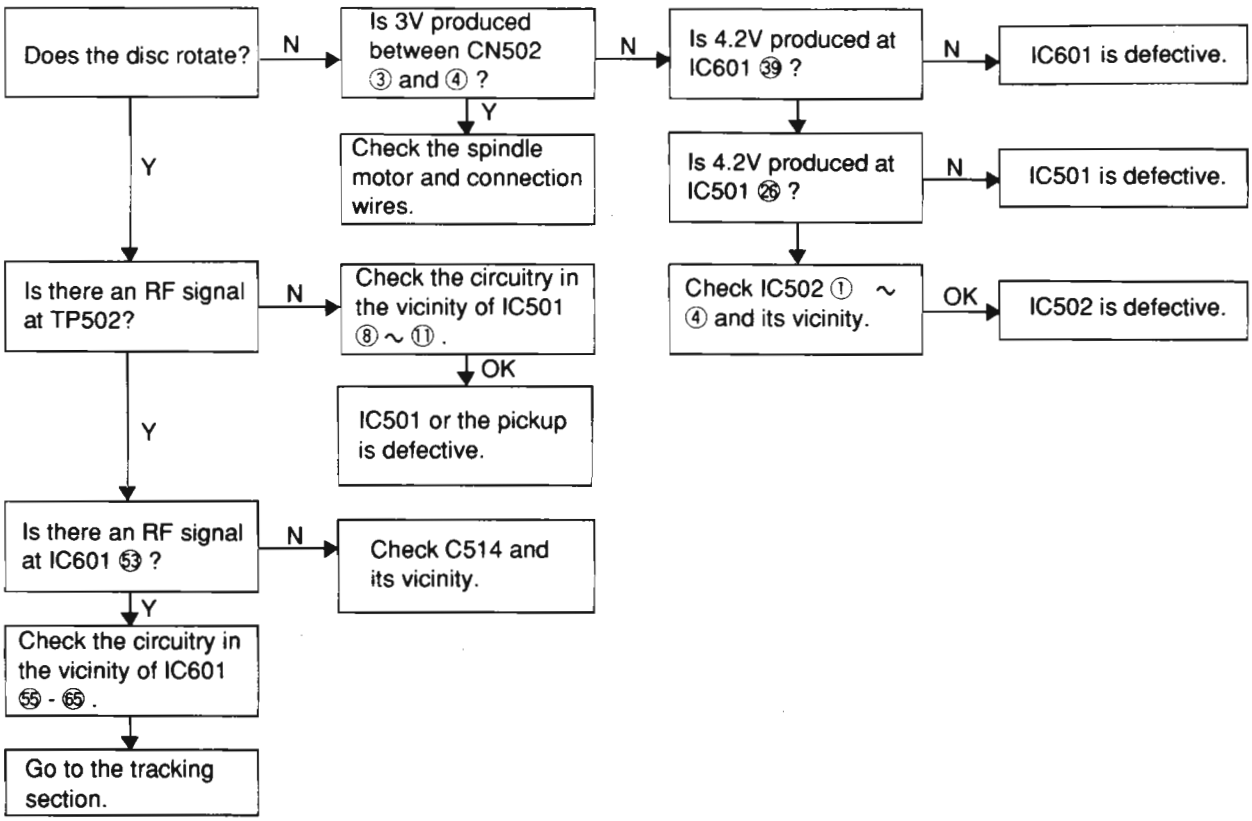

Fig. 7-5

■ Signal processing section

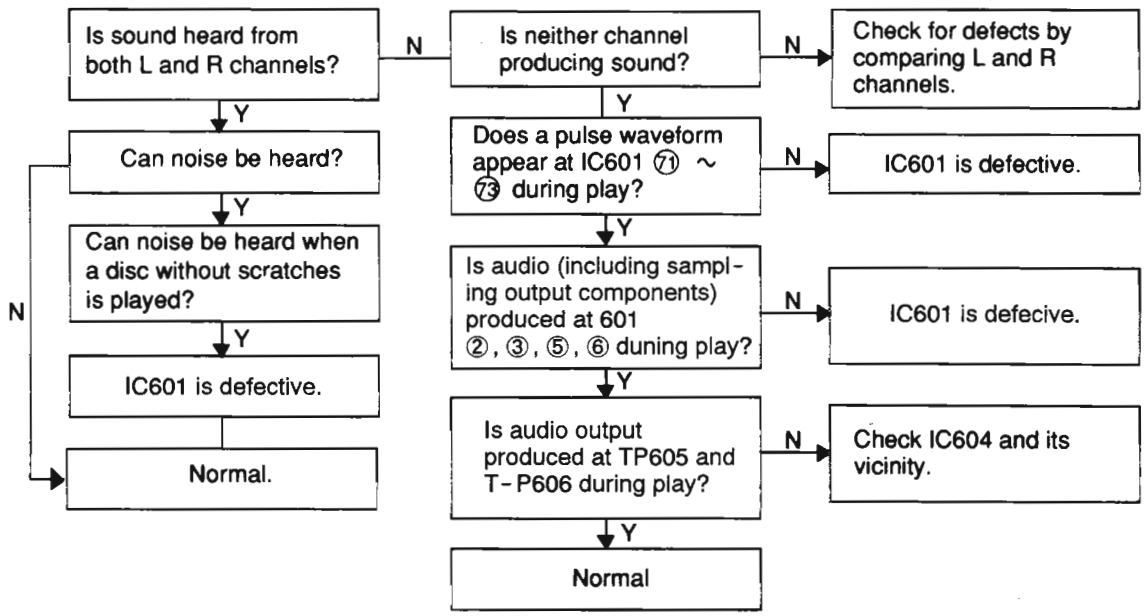

Fig. 7-6

■ Tracking section

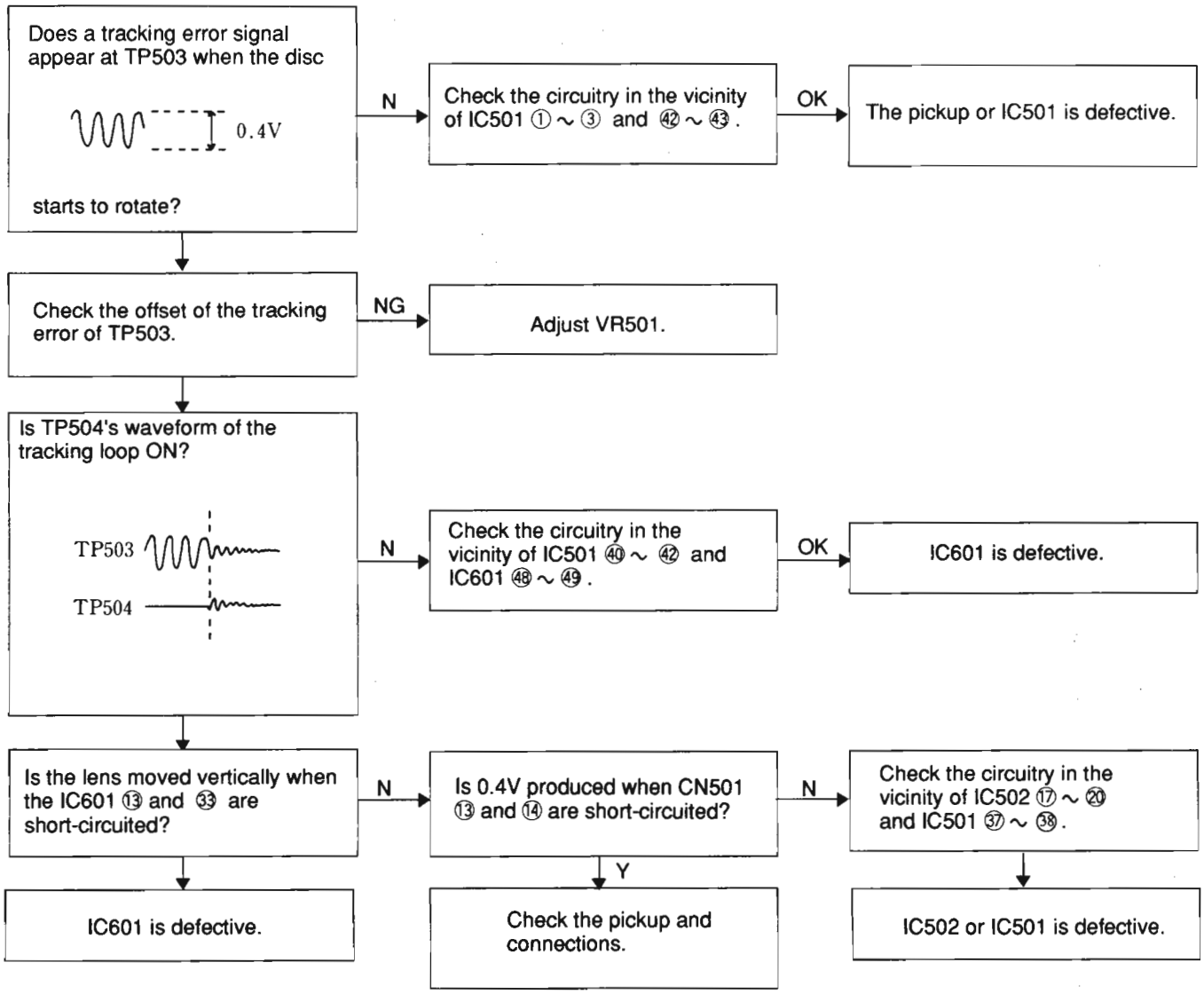

Fig. 7-7

■ Analytic Drawing of CD Mechanism: Block No. M3

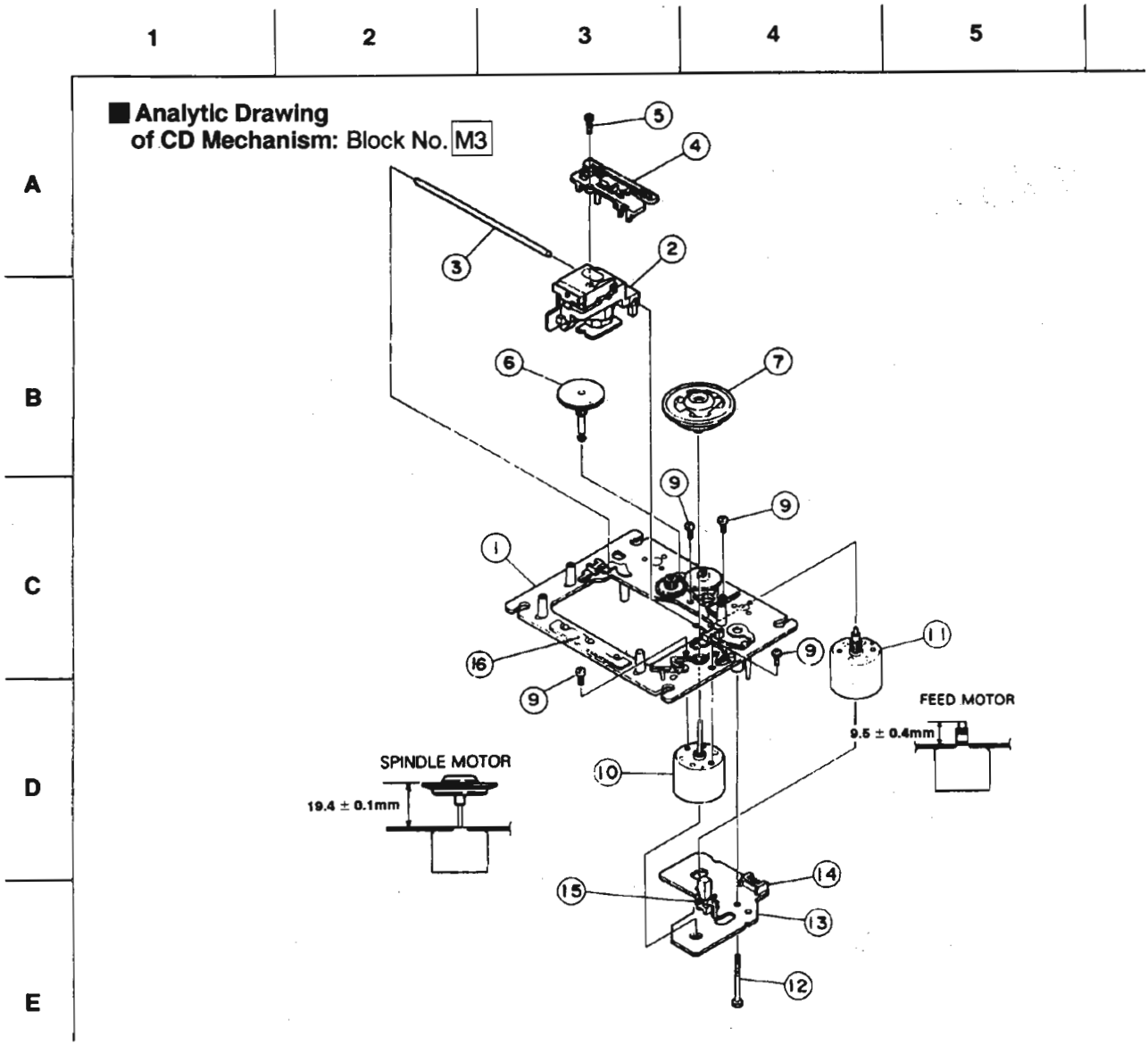

Fig. 7-8

■ CD Mechanism Assembly Parts List

BLOCK NO. M3MM

⚠	REF.	PARTS NO.	PARTS NAME	REMARKS	QTY	SUFFIX	CLR
	1	EPB-002A	MECHA BASE ASSY		1		
	2	OPTIMA-6S	OPTICAL PICK-UP		1		
	3	E406777-001	GUIDE SHAFT		1		
	4	E307746-001	CD RACK		1		
	5	SDSF2006Z	SCREW		1		
	6	EPB-003A	MECHA GEAR		1		
	7	E75807-301	TURN TABLE		1		
	9	SDSP2003N	SCREW		1		
	10	E406783-001	DC MOTOR		1		
	11	E406784-001SA	DC MOTOR ASSY		1		
	12	E75832-001	SPECIAL SCREW		1		
	13	EMW10190-001	PRINTED BOARD		1		
	14	EMV5109-006B	C.TERMINAL		1		
	15	ESB1100-005	LEAF SWITCH		1		
	16	E407212-001	DAMPER		1		

8. Analytic Drawing and Parts List

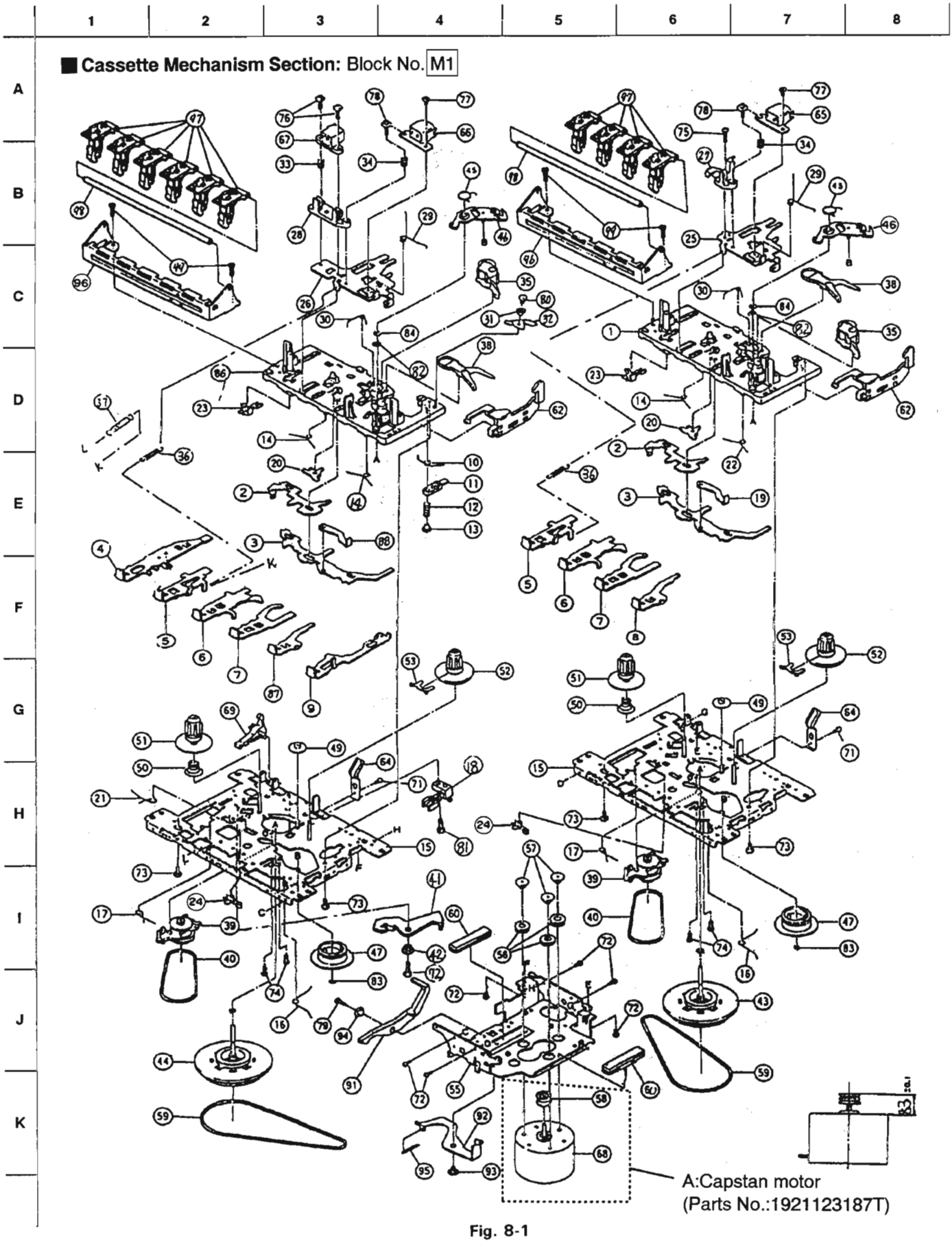

Fig. 8-1

Cassette Mechanism Parts List M1

BLOCK NO. M1MM

⚠	REF.	PARTS NO.	PARTS NAME	REMARKS	QTY	SUFFIX	CLR
	A	1921123187T	CAPSTAN MOTOR	REF.58,68	1		
	1	192114301ZT	BASE ASS'Y		1		
	2	19211409T	SWITCH ACTUATOR		2		
	3	19211438T	PUSH B.ACTUATOR		2		
	4	19211422T	BUTTON LEVER	REC BUTTON	1		
	5	19211484T	BUTTON LEVER	PLAY BUTTON	2		
	6	19211424T	BUTTON LEVER	REW BUTTON	2		
	7	19211425T	BUTTON LEVER	FF BUTTON	2		
	8	19211426T	BUTTON LEVER	STOP BUTTON	1		
	9	19211461T	BUTTON LEVER	PAUSE BUTTON	1		
	10	19211413T	P CONT. SPRING		1		
	11	19211455T	PAUSE LEVER (E)		1		
	12	19211412T	SPRING	PAUSE LEVER	1		
	13	19211411T	PAUSE STOPPER		1		
	14	19211414T	TORSION SPRING	BUTTON LEVER	3		
	15	192101501ZT	CHASSIS ASS'Y		2		
	16	19211416T	TORSION SPRING	E.ACTUATER	2		
	17	19211417T	TORSION SPRING	P.S.LEVER	2		
	18	64010138T	LEAF SWITCH	MSW-1275	1		
	19	182101159T	E.KICK LEVER		1		
	20	19211420T	STOPPER		2		
	21	19211449T	LEVER SPRING	REC BUTTON	1		
	22	19211433T	TORSION SPRING	BUTTON LEVER(C)	1		
	23	MSW-1541T	LEAF SWITCH	MSW-1541T	2		
	24	640101161T	LEAF SWITCH	MSW-17820MVDO	2		
	25	19210311T	HEAD PANEL		1		
	26	19210314T	HEAD PANEL		1		
	27	19210304AT	HEAD BASE		1		
	28	19210306T	HEAD BASE		1		
	29	19210309T	PANEL P SPRING		2		
	30	19211418AT	SPRING	M CONTROL	2		
	31	19211437T	P ARM COLLAR		1		
	32	19211434T	P.ROLLER ARM		1		
	33	18210308T	SPRING		1		
	34	18210307T	AZIMUTH SPRING		2		
	35	192104309T	P.ROLL.ARM ASSY		2		
	36	18210150T	PLAY BUTTON LEV	PLAY BUTTON LEV	2		
	37	18211311T	TENSION SPRING	E.SLIDE LEVER	1		
	38	19212604TT	SENSING LEVER		2		
	39	192107308T	RF CLUTCH ASS'Y		2		
	40	18210711T	RF.BELT		2		
	41	19210201T	REC ARM		1		
	42	19211437T	P ARM COLLAR		1		
	43	192109318T	FLYWHEEL ASS'Y	PB MECHA.(B)	1		
	44	192109317T	FLYWHEEL ASS'Y	REC/PB MECHA.(A	1		
	45	19212605T	TORSION SPRING	GEAR PLATE	2		
	46	192126502ZT	GEAR PLATE ASSY		2		
	47	19212602T	CAM GEAR		2		
	49	18211070T	F.FORWARD GEAR		2		
	50	18291010T	BACK T. SPRING		2		
	51	192105304T	S. REEL ASS'Y	SUPPLY	2		
	52	192105303T	T. REEL ASS'Y	TAKE-UP	2		
	53	19210506T	SENSOR		2		
	55	19211211T	MOTOR BRACKET		1		

BLOCK NO. M1MM

⚠	REF.	PARTS NO.	PARTS NAME	REMARKS	QTY	SUFFIX	CLR
	56	18211266T	MOTOR RUBBER		3		
	57	18511418T	COLLAR SCREW		3		
	58	19211213T	MOTOR PULLEY		1		
	59	19210923T	MAIN BELT		2		
	60	182112126T	ANTI V.FELT MAT		2		
	62	19211302T	EJ. SLIDE LEVER	EJECT	2		
	64	18291001T	PACK SPRING		2		
	65	MS15R-AA2N1	R/P HEAD	DECK B	2		
	67	LE15A-C1	E. HEAD	DECK A	1		
	68	60020222T	MOTOR	EG530YD-9BH	1		
	69	18211069T	REC.SAF.LEVER		1		
	71	91790000T	TAPPING SCREW	M2 X 3	2		
	72	91800000T	SCREW	M2 X 4	7		
	73	96790000T	TAPPING SCREW	M2 X 5	4		
	74	99991809T	SPECIAL SCREW	M2 X 4.5	6		
	75	90040000T	SCREW(M2 X 6)	M2 X 6	1		
	76	92230000T	SCREW	M2 X 7.5	2		
	77	91150000T	SCREW(M2 X 3)	M2 X 3	2		
	78	99220000T	SCREW(M2 X 7)	M2 X 7	2		
	79	91820000T	SCREW	M2 X 6	1		
	80	99992041T	SPECIAL SCREW	M2 X 3	1		
	81	91810000T	SCREW	M2 X 5	1		
	82	99990003T	POLYSLIDER WAS.	2.1X4X 0.13	2		
	83	94220000T	P.WASHER	1.2X3.8X0.3	2		
	84	99990313T	POLY.CUT WASHER	1.45X3.8X0.5	2		
	86	192114316T	BASE ASS'Y		1		
	87	19211466T	BUTTON LEVER	STOP	1		
	88	19211464T	E KICK LEVER		1		
	91	19211209T	P.KICK LEVER(B)		1		
	92	18211268T	P.KICK LEVER		1		
	93	18211223T	COLLAR SCREW		1		
	94	18211265T	COLLAR (B)		1		
	95	18211312T	SPRING	E. SLIDE LEVER	1		

Enclosure Assembly Section: Block No. M2

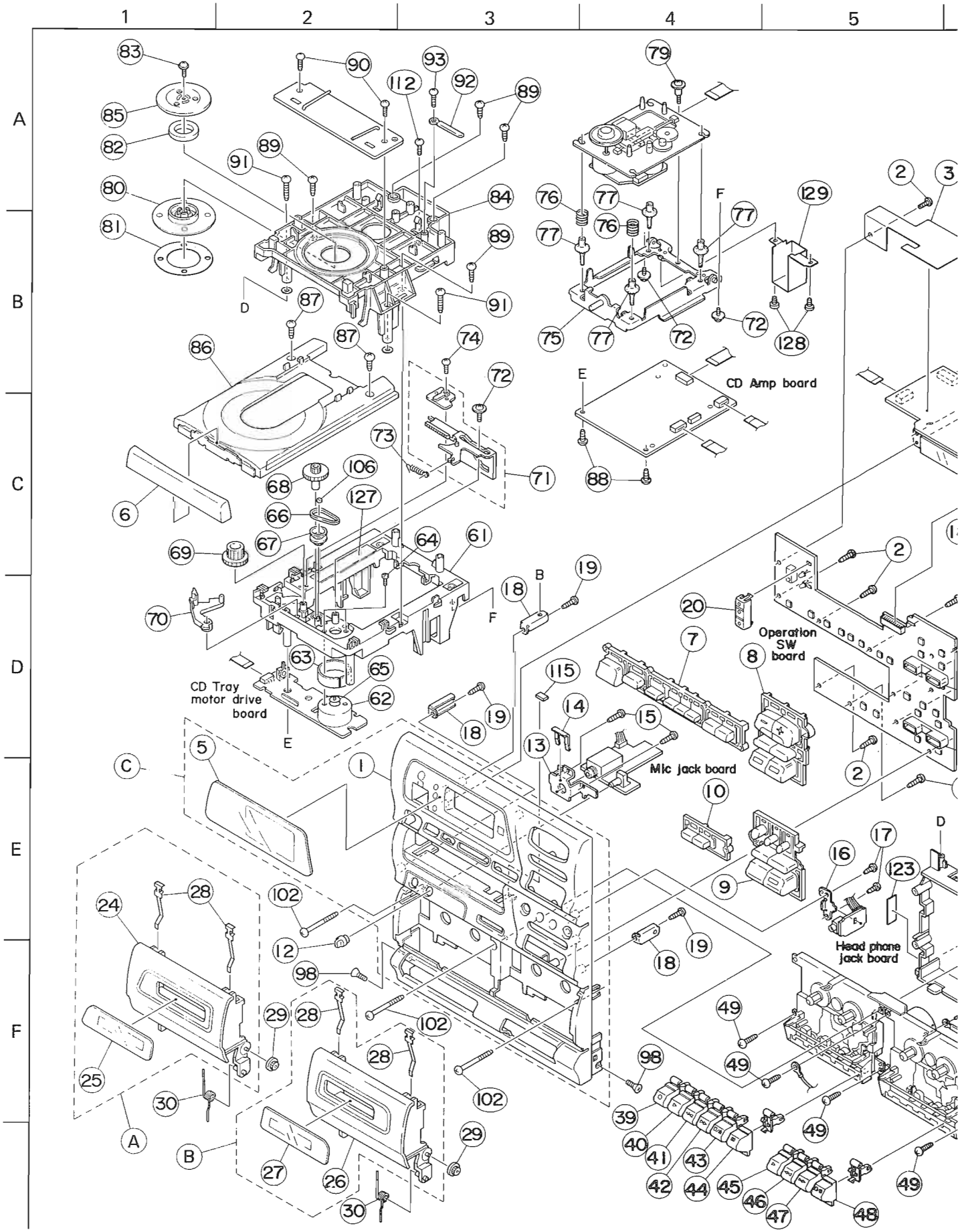

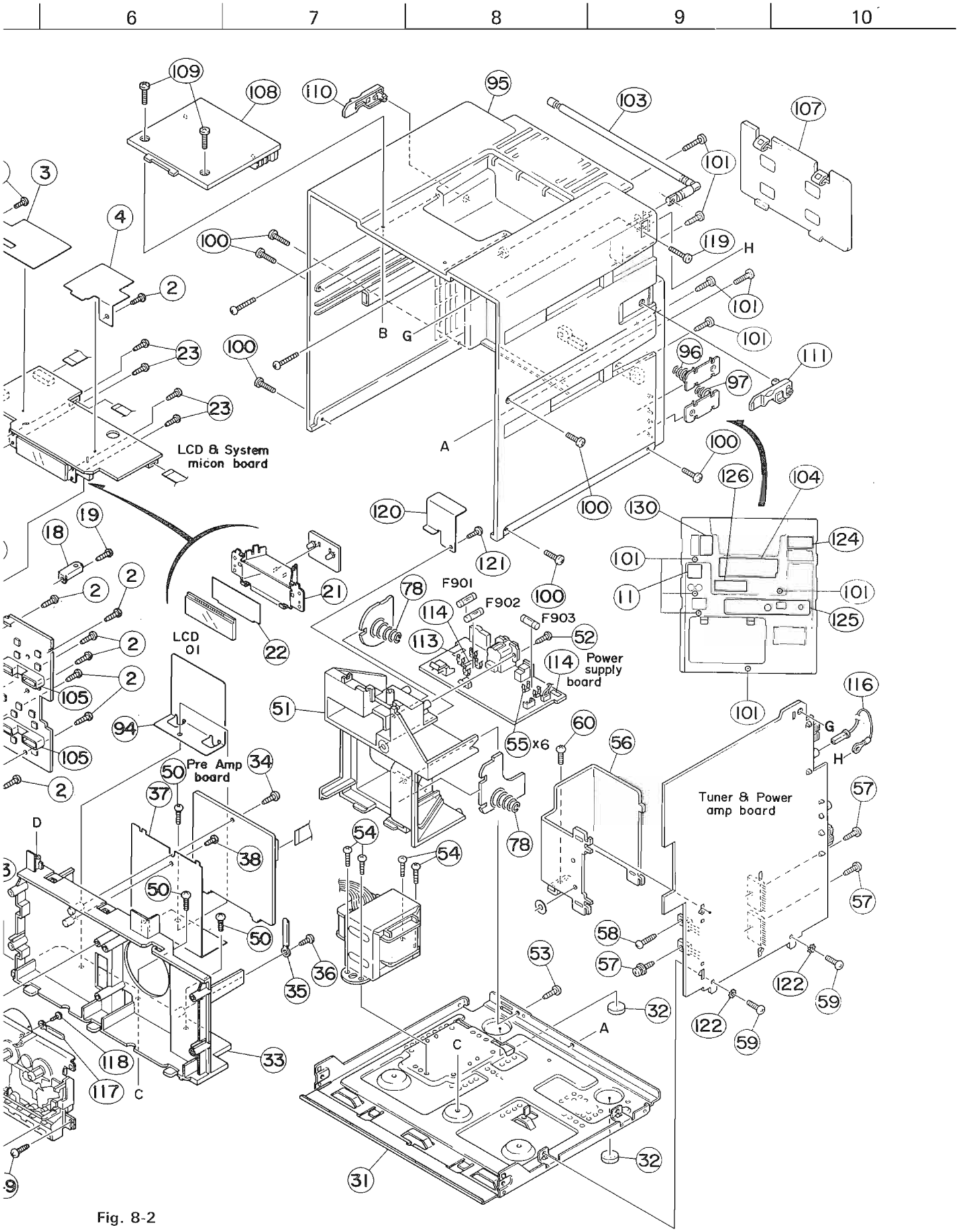
6
7
8
9
10
LCD & System micon board
LCD 01
Pre Amp board
Power supply board
Tuner & Power amp board
F901
F902
F903
x6

Fig. 8-2

■ Enclosure Assembly Parts List

BLOCK NO. M2M1

⚠	REF.	PARTS NO.	PARTS NAME	REMARKS	QTY	SUFFIX	CLR
	A	ZCHX5K-CBA	CASSETTE HOLDER	REF.24,25,28	1		
	B	ZCHX5K-CBB	CASSETTE HOLDER	REF.26,27,28	1		
	C	ZCHX5K-FB	FRONT PANEL ASY	REF.1,5	1		
	1	VJG1310-002	FRONT PANEL		1		
	2	SBSF2608Z	SCREW	FRONT+PWB	2		
		SBSF2608Z	SCREW	POWER BUTTON	2		
		SBSF2608Z	SCREW	FOR CD BUTTON	2		
		SBSF2608Z	SCREW	TUNER BUTTON	3		
		SBSF2608Z	SCREW	FOR SELECT BUT	2		
		SBSF2608Z	SCREW	FOR KARAOKE BUT	1		
	3	VMA4641-001	FR.BARRIER (L)		1		
	4	VMA4642-001	FR.BARRIER (R)		1		
	5	VJK3648-002	LCD LENS		1		
	6	VJT3364-002	CD FITTING		1		
	7	VXP3671-001	POWER BUTTON		1		
	8	VXP5266-00B	TUNER BUTTON		1		
	9	VXP5267-00A	CD BUTTON ASSY		1		
	10	VXP5268-001	SELECT BUTTON		1		
	11	VJD5461-001	BLIND PLATE		1		
	12	VXL4439-001	VOL.KNOB		1		
	13	VYH7916-001	MIC BRACKET		1		
	14	VKL6752-001	SNAP PLATE		1		
	15	SBSF2608Z	SCREW	FOR MIC BKT.	2		
	16	VYH7917-001	HEDPHON BKT		1		
	17	SBSF2608Z	SCREW	FOR H.P.BKT.	2		
	18	VYH7918-001	JOINT BRACKET		4		
	19	SBSF2608Z	SCREW	FOR JOINT BKT.	4		
	20	VYH7919-001	LED HOLDER(A)	FOR POWER LED	1		
	21	VYH3837-001	LAMP CASE		1		
	22	VYTT651-001	LCD FILTER		1		
	23	SBSF2608Z	SCREW	FOR LAMP CASE	4		
	24	VJT2346-006	CASSETTE DOOR L		1		
	25	VJT4219-103	DOOR LENS(L)		1		
	26	VJT2346-005	CASSETTE DOOR R		1		
	27	VJT4219-104	DOOR LENS(R)		1		
	28	VKY4180-001	CASSETTE SPRING		4		
	29	VYH5601-001	GEAR		2		
	30	VKW5151-003	DOOR SPRING		2		
	31	VKL1427-001	BOTTOM CHASSIS		1		
	32	VJF4003-001	FOOT	TO BOTTOM CHASS	2		
	33	VYH1248-002	MECHA BASE		1		
	34	SBSF3010Z	SCREW		1		
	35	VKZ4001-110	WIRE CLAMP		1		
	36	SBSF3010Z	SCREW		1		
	37	VMA4635-001	SHIELD	CASSETTE	1		
	38	SBSF3010Z	SCREW		1		
	39	VXP3670-001	MECHA BUTTON	REC	1		
	40	VXP3670-002	MECHA BUTTON	A:PLAY	1		
	41	VXP3670-003	MECHA BUTTON	A:REW	1		
	42	VXP3670-004	MECHA BUTTON	A:FF	1		
	43	VXP3670-005	MECHA BUTTON	A:STOP/EJECT	1		
	44	VXP3670-006	MECHA BUTTON	A:PAUSE	1		
	45	VXP3670-007	MECHA BUTTON	B:PLAY	1		
	46	VXP3670-008	MECHA BUTTON	B:REW	1		
	47	VXP3670-009	MECHA BUTTON	B:FF	1		

BLOCK NO. M2MM

⚠	REF.	PARTS NO.	PARTS NAME	REMARKS	QTY	SUFFIX	CLR
	48	VXP3670-010	MECHA BUTTON	B:STOP/EJECT	1		
	49	SBSF3010Z	SCREW	M.BASE+C.MECHA	4		
	50	SBST3008Z	SCREW	BOTTOM+M.BASE	3		
	51	VYH1250-001	AC HOLDER		1		
	52	SBSF3010Z	SCREW	POWER PWB+AC HO	1		
	53	SBSF3010Z	SCREW	AC HOLDER+BOTTO	1		
	54	SBST3008Z	SCREW	FOR TRANS	4		
	55	VMZ0125-001Z	FUSE CLIP		6		
	56	VYH3839-001	HEAT SINK		1		
	57	SBSF3010Z	SCREW	HEAT SINK+ IC	3		
	58	DPSP3010Z	SCREW	HEAT SINK+IC	1		
	59	SBST3008Z	SCREW	AMP PWB+BOTTOM	2		
	60	SBST3008Z	SCREW	HEAT SINK+BOTTO	1		
	61	VYH1238-201	LODING BASE		1		
	62	RF-500TB-12560	MOTOR		1		
	63	53 – 193	MOTOR SHIELD		1		
	64	SPSK2640Z	MINI SCREW		2		
	65	E75984-001	MOTOR PULLEY		1		
	66	E75950-002	BELT		1		
	67	E75985-001	GEAR(1)		1		
	68	E75986-002	GEAR(2)		1		
	69	E75987-331	GEAR(3)		1		
	70	E307162-221	LEVER		1		
	71	E307252-221	CAM-PLATE		1		
	72	E65923-003	TAPPING SCREW		3		
	73	VYH7787-001	SPRING		1		
	74	SBSF3008Z	SCREW		1		
	75	E307179-222	E.BASE ASS'Y		1		
	76	E406871-001	SPRING		2		
	77	E406294-002	INSULATOR		4		
	78	VYH5483-001	BATTERY SPRING		2		
	79	E406293-001	SPECIAL SCREW		1		
	80	VYH3680-001	CLAMPER		1		
	81	VYH7315-005	PAD		1		
	82	VYH7313-001	MAGNET		1		
	83	GBSF2606Z	SCREW	FOR CLAMPER	1		
	84	VYH1249-001	CLAMPER BASE		1		
	85	VYH3764-201	CLAMPER PLATE		1		
	86	VYH1240-001	TRAY		1		
	87	SBSF3008Z	SCREW	TRAY STOPPER	2		
	88	SBSF3008Z	SCREW	CD AMPPWB+L.BAS	2		
	89	SBSF3008Z	SCREW	CLP.BASE+L.BASE	4		
	90	SBSF3010Z	SCREW	SUTE PWB+C.BASE	2		
	91	SBSF3010Z	SCREW	CD ASS'Y+M.BASE	2		
	92	VKZ4001-111	WIRE HOLDER		1		
	93	SBSF3010Z	SCREW		1		
	94	VMA4640-001	TRANS SHIELD		1		
	95	VJG1311-002	REAR CABINET		1		
	96	VYH7927-00B	B.SPRING ASSY A		1		
	97	VYH7928-00B	B.SPRING ASSY B		1		
	98	SSST3006Z	SCREW	FRONT+BOTTOM CH	2		
	99	SDST3008M	SCREW	REAR+FRONT TO	2		
	100	SDST3008M	SCREW	REAR+FRONT SID	6		
	101	SDSF3012M	SCREW	FOR REAR JACK	5		

BLOCK NO. M2MM

⚠	REF.	PARTS NO.	PARTS NAME	REMARKS	QTY	SUFFIX	CLR
	102	SBSF3030M	SCREW	FRONT+ M.BASE	3		
	103	VJA3033-00A	ROD ANT ASS'Y		1		
⚠	104	VYN9240-C009	NAME PLATE		1	EN	
⚠		VYN9240-C002	NAME PLATE		1	B	
⚠		VYN9240-C005	NAME PLATE		1	E	
⚠		VYN9240-C008	NAME PLATE		1	G	
⚠		VYN9240-C015	NAME PLATE		1	GI	
⚠		VYN9240-C012	NAME PLATE		1	VX	
	105	VYH7920-001	LED HOLDER(B)	FOR KNOB LED	2		
	106	E60912-001	SPEED NUT		1		
	107	VJC3266-001	BATT COVER		1		
	108	VJC2532-001	HANDLE		1		
	109	SBSF3014Z	SCREW	REAR CABI+HADLE	2		
	110	VYH3845-001	LOCK LEVER(L)	SPEAKER JOINT	1		
	111	VYH3846-001	LOCK LEVER(R)	SPEAKER JOINT	1		
	112	SBSF3010Z	SCREW	AC HOLDER	1		
	113	VND4003-077	FUSE LABEL	FOR F901	1		
	114	VND4003-076	FUSE LABEL	FOR F903	1		
		VND4003-076	FUSE LABEL	FOR F902	1		
	115	VYSS1R5-038	SPACER		1		
	116	VMP0126-001J	ANT.WIRE ASSY	ROD ANT+COAXIAL	1		
	117	VKZ4001-110	WIRE CLAMP		1		
	118	SBST3006Z	SCREW		1		
	119	SDSP3012N	SCREW	ROD ANT	1		
	120	VMA4637-001	BARRIER(A)	VOL.SELE.GUARD	1		
	121	SBSF3010Z	SCREW	BARRIER+AC HOLD	1		
	122	WBS3000N	WASHER	AMP PWB+BOTTOM	2		
	123	VYSA1R4-056	SPACER		1		
	124	E70891-001	CLASS 1 LABEL	TO REAR CABINET	1		
	125	VJD5460-002	REAR PLATE		1		
	126	VND4320-001	CAUTION LABEL		1	VX	
	127	E406709-001	LASER CAUTION	TO LOADING BASE	1		
	128	SDSR2606Z	SCREW	FOR SHIELD CASE	2		
	129	VMA4622-202	SHIELD CASE		1		
⚠	F 901	QMF51E2-R50SBS	FUSE		1		
⚠	F 902	QMF51E2-5R0	FUSE		1		
⚠	F 903	QMF51E2-5R0	FUSE		1		
⚠	T 901	VTP66J2-12H	POWER TRANS		1		

9. Wiring Connections

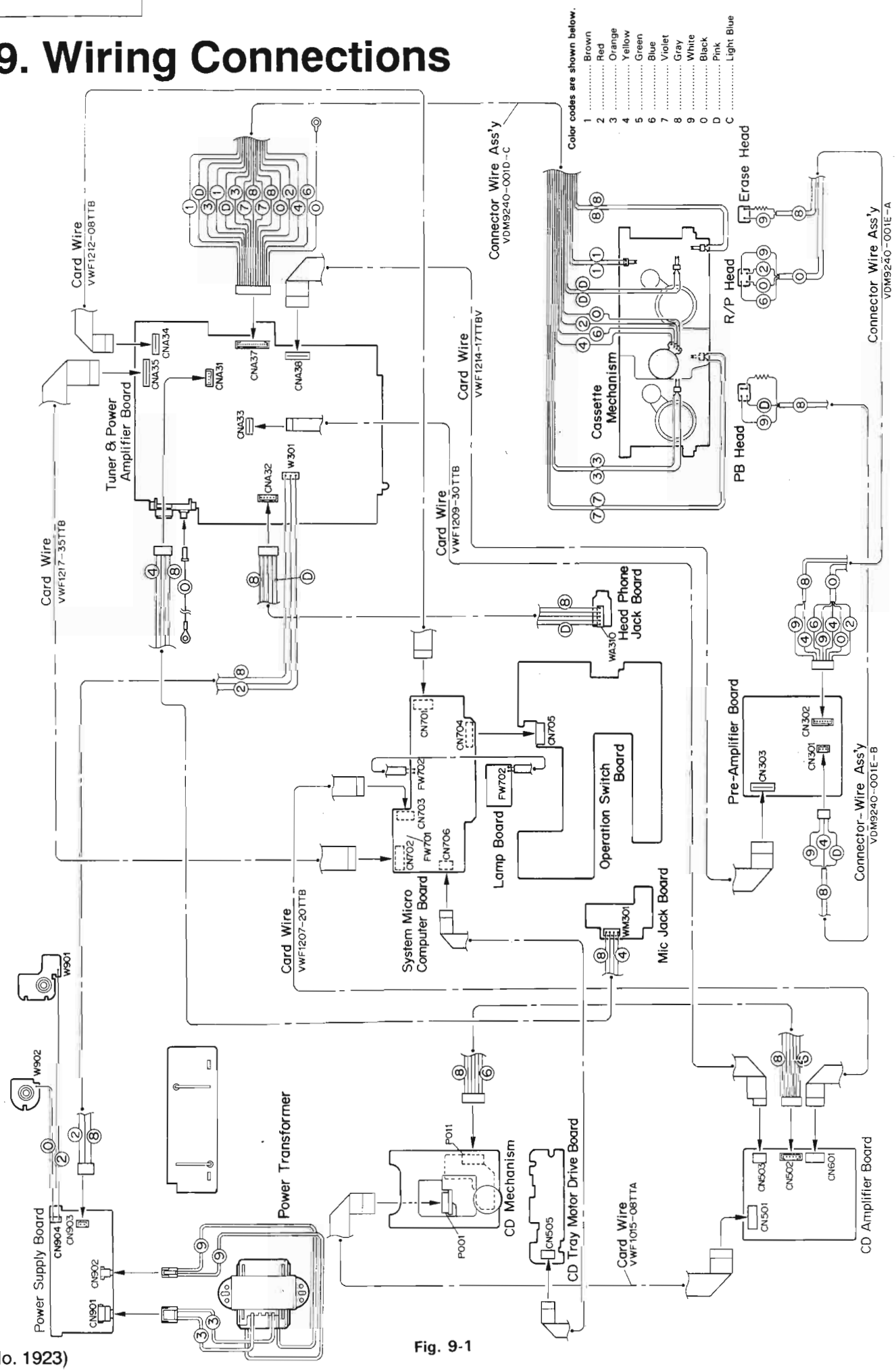

Fig. 9-1

10. Block Diagram

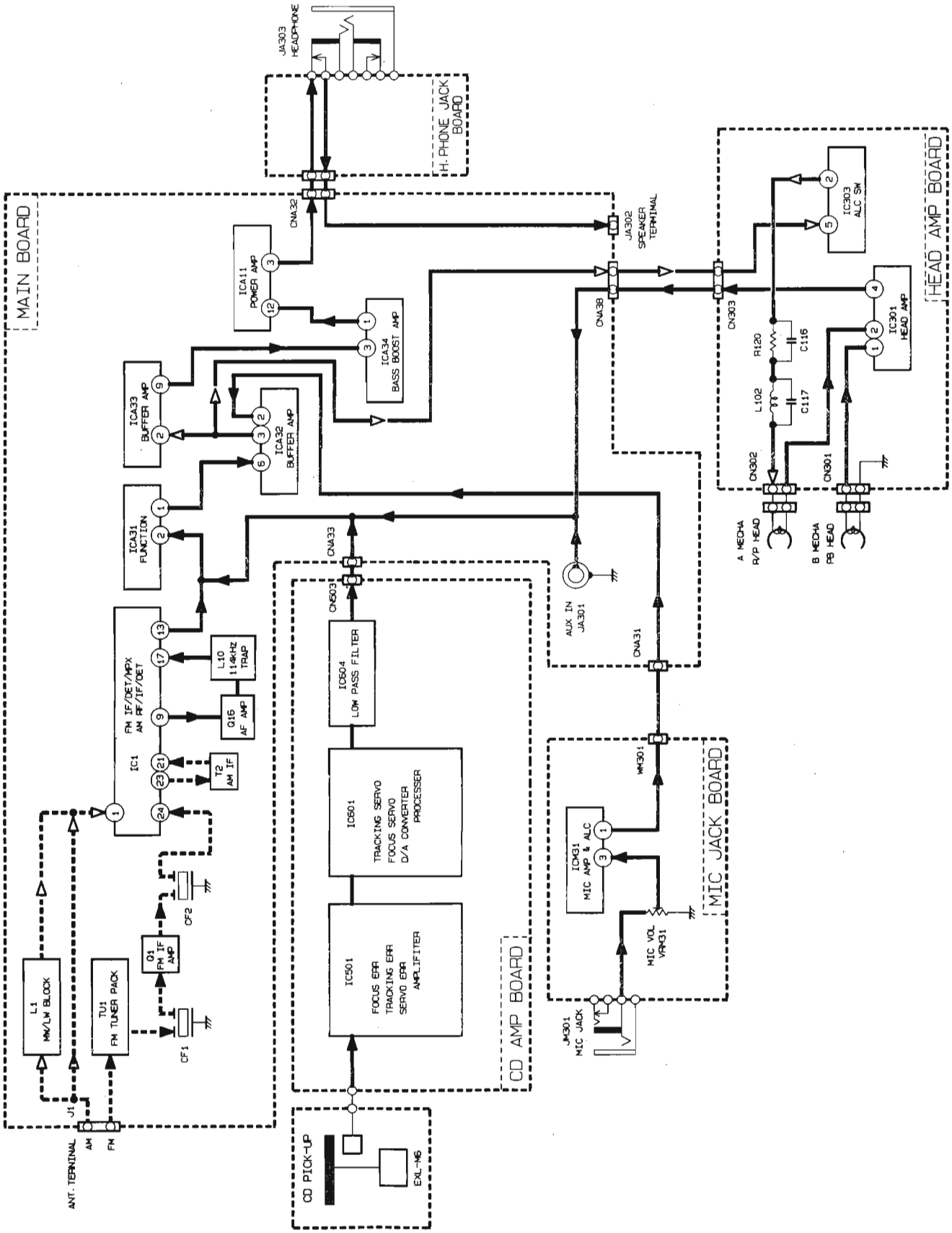

Fig. 10-1

■ Integrated circuit

◆ IC601:TC9284AF (1chip Processor)

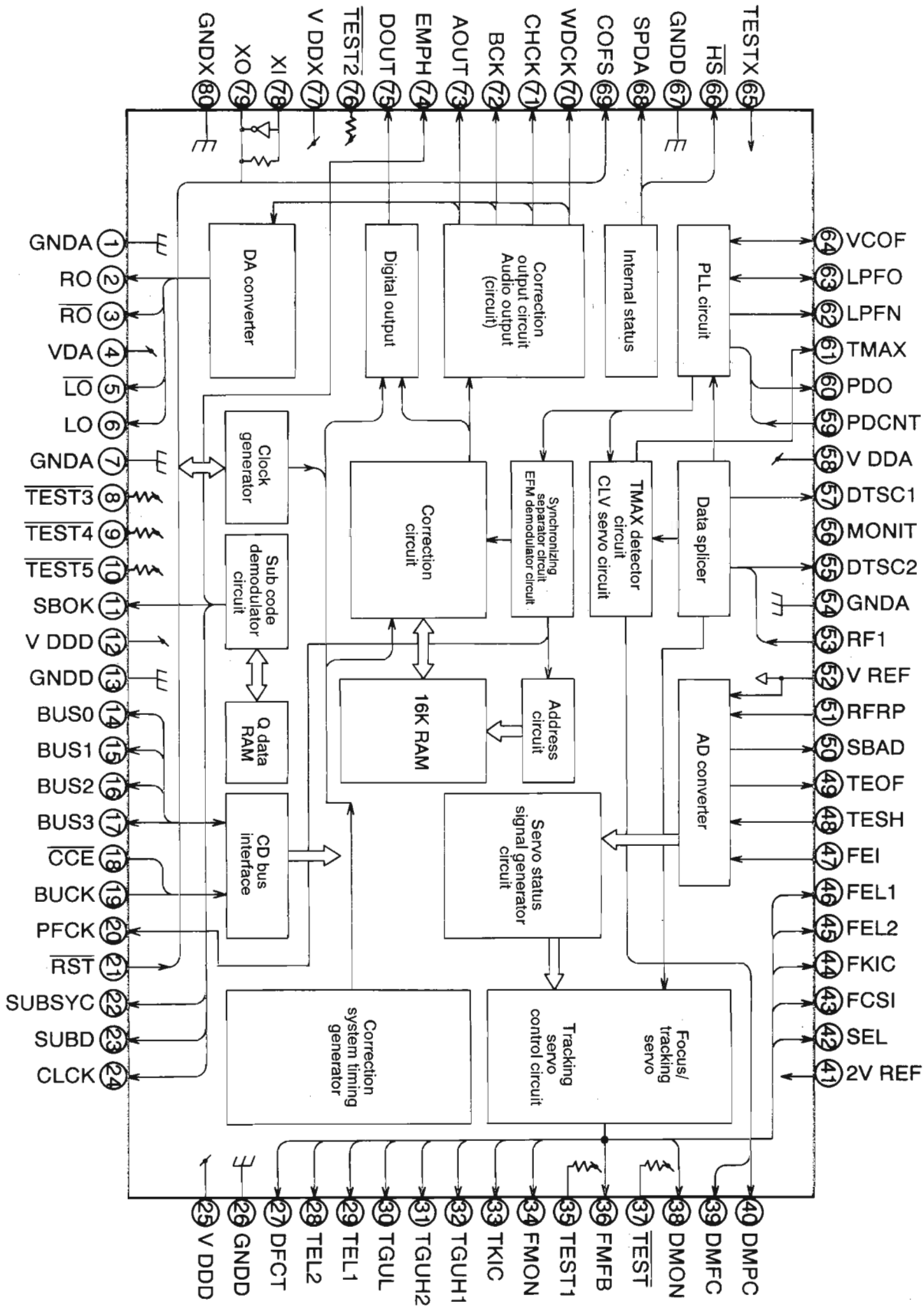

Fig. 10-2

■ IC601:TC9284AF

Terminal No.	Designation of Terminal	I/O	Description of Function
1	GNDA	——	R channel analog gland terminal of D/A converter
2	RO	O	Forward output terminal of R channel data
3	$\overline{RO}$	O	Reverse output terminal of R channerl data
4	VDA	——	Power supply terminal to D/A converter
5	$\overline{LO}$	O	Reverse output terminal of L channel data
6	LO	O	Forward output terminal of L channel data
7	GNDA	——	L channel analog gland terminal of D/A converter
8	$\overline{TEST3}$	I	Test terminal. Normally at "H" or open (with pullup resistor)
9	$\overline{TEST4}$	I	Test terminal. Normally, it is a "H" or open (with pullup resistor).
10	$\overline{TEST5}$	I	Test terminal. Normally, it is a "H" or open (with pullup resistor).
11	SBOK	O	CRCC decision result output terminal of sub code Q data. It is at "H" when the result is OK.
12	V_{DDD}	——	Digital power supply voltage terminal (+5V)
13	GNDD	——	Digital gland terminal
14	BUS0	I/O	Microcomputer interface data input/output terminal. (With Schmidt input, open drain output and pull-up resistor)
15	BUS1		
16	BUS2		
17	BUS3		
18	$\overline{CCE}$	I	Microcomputer interface chip enable signal input terminal. BUS 3-0 is active when the terminal is at "H" (Schmidt input)
19	BUCK	I	Microcomputer interface clock input terminal (Schmidt input)
20	PFCK	O	Playback system frame sink signal output terminal
21	$\overline{RST}$	I	Reset signal input terminal. It is at "L" during resetting (with pull-up resistor)
22	SUBSYC	O	Sub code block sink output terminal. It is at "H" at S1 position when the sub code sink is detected.
23	SUBD	O	Sub code P-W output terminals
24	CLCK	I	Sub code P-W data reading clock input terminal
25	V_{DDD}	——	Digital power supply voltage terminal (+5V)
26	GNDD	——	Digital gland terminal
27	DFCT	O	Defect detector signal output terminal. It is at "V_{REF}" during detection of defect, but at "HiZ" under normal conditions.
28	TEL2	O	Tradcking gain abjusting analog switch output terminal. It is at "V_{REF}" during gain adjustment, but at "HiZ" under normal conditions.
29	TEL1		
30	TGUL	O	Tracking servo gain amplifier analog switch output terminal. It is possible to select the polarity at gain amplifier and normal playback by command.
31	TGUH2	O	Tracking servo gain amplifier analog switch output terminal. It is at "V_{REF}" at gain amplifier, but at "HiZ" under normal conditions. Although TGUH1 is used during normal playback, TGUH2 is used during double speed playback.
32	TGUH1		
33	TKIC	O	Tracking actuator kick signal output terminal. It is used as a kick signal output terminal during adjustment of $NKIC_x$ and $CKIC_x$ tracking gains. Kicking is in outer peripheral direction at "$2V_{REF}$" and inner peripheral direction at "L". Normally,this terminal is at "HiZ". Three values are output ($2V_{REF}$, HiZ and GNDA).
34	FMON	O	Feed servo ON/OFF analog switch output terminal. It is at "HiZ" when servo is on, but at "V_{REF}" when servo is off.
35	$\overline{TEST1}$	I	Test terminal. It is normally at "H" or open (with pull-up resistor).
36	FMFB	O	Feed motor FWD/BWD feed control signal output terminal. Feeding is in outer peripheral direction at "$2V_{REF}$" and inner peripheral direction at "L". Normally, this terminal is at "HiZ". Three values are output ($2V_{REF}$, HiZ and GNDA).
37	$\overline{TEST}$	I	Test terminal. It is normally at "H" or open (with pull-up resistor).
38	DMON	O	Gain selector analog switch output terminal of disc motor drive circuit. By command, it is possible to select "HiZ" when CLV servo is off and "HiZ/V_{REF}" when the servo is off.
39	DMFC	O	Disc motor CLV servo AFC signal output terminal. Three values are output ($2V_{REF}$, V_{REF} and GNDA).

action	Command	DMFC output
Motor acceleration	DMFK	"$2V_{REF}$"
CLV servo ON	DMSV	AFC signal (PWM)
Motor brake ON	DMBK	"L"
CLV servo OFF	DMOFF	"V_{REF}"

Terminal No.	Designation of Terminal	I/O	Description of Function
40	DMPC	O	Disc motor CLV servo APC signal outpur terminal. Three values are output ($2V_{REF}$, HiZ snd GNDA).
41	$2V_{REF}$	——	Analog reference power supply teuminal (Twice the "V_{REF}" voltage)
42	SEL	O	Servo mode indicator signal output terminal for ON/OFF control of laser diode (LD) and focus servo. Three values are output (V_{DDA}, HiZ and GNDA).

SEL output	LD	Focus servo	Action mode
"L"	OFF	OFF	LD OFF
"HiZ"	ON	OFF	Focus search
"H"	ON	ON	Focus ON (normal play, etc.)

Terminal No.	Designation of Terminal	I/O	Description of Function
43	FCSI	O	Focus actuator drive signal terminal at [FOCUS SEARCH] mode. The lens is driven in distant direction from disc at "V_{DDA}" but in approaching direction to the lens at "L". Normally, this terminal is at "HIZ". Three values are output (V_{DDA},HiZ and GNDA).
44	FKIC	O	Focus actuator drive signal output terminal at [FOCUS GAIN ADJUST] mode. The lens is driven in distant direction from disc at "V_{DDA}" but in approaching direction to the lens at "L". Normally, this terminal is at "HiZ". Three values are output (V_{DDA}, HiZ and GNDA).
45	FEL2	O	Focus gain adjusting analog switch output terminal. These terminals are at "V_{REF}" or "HiZ".
46	FEL1		
47	FEI	I	Focus error signal input terminal (Analog input)
48	TESH	I	Tracking error signal sample hole analog switch input terminal (Analog input)
49	TEOF	O	Tracking servo action(actuator) ON/OFF analog switch input terminal (Analog input)
50	SBAD	I	Sub beam adder signal input terminal (Analog input)
51	RFRP	I	RF ripple signal input terminal (Analog input)
52	V_{REF}	——	Analog reference power supply terminal
53	RFI	I	RFsignal input terminal (Analog input)
54	GNDA	——	Analog gland terminal
55	DTSC2	O	Data slicer control EFM signal reversion output terminal
56	MONIT	O	Internal signal monitor output terminal. It is possible to select EFMO, PLCK and LOCK signals.Muting is also possible.
57	DTSC1	O	Data splicer control EFM signal forward output terminal
58	VDDA	——	Analog power supply terminal
59	PDCNT	I	PDO output control terminal. The PDO terminal is forcedly fixed to "HIZ" at "L", but normal output at "H".
60	PDO	O	Phase difference output terminal between EFM and PLCK signals. Three values are output ($2V_{REF}$, HiZ and GNDA).
61	TMAX	O	TMAX detection result output terminal. Three values are output ($2V_{REF}$, HiZ and GNDA) .

TMAX detection result	TMAX output
Longer than specified period	"L"
Shorter than specified period	"$2V_{REF}$"
Within specified period	"HiZ"

Terminal No.	Designation of Terminal	I/O	Description of Function
62	LPFN	I	Low pass filter amplifier reverse input terminal (Analog input)
63	LPFO	O	Low pass filter amplifier output terminal (Analog input)
64	VCOF	O	VCO filter terminal
65	TESTX	I	Test terminal. It is normally at "H" or "L".
66	$\overline{HS}$	O	Double speed mode putput terminal. Although "H" is output during normal playback, "L" is output during double speed playback.
67	GNDD	——	Digital gland terminal
68	SPDA	O	Processor status signal output terminal
69	COFS	O	Correction system frame clock (7.35kHz) output terminal
70	WDCK	O	Word clock (88.2kHz) output terminal. By microcomputer command, it is possible to select SUBQ, BUFOV and IPF signals.
71	CHCK	O	Channel clock (44.1kHz) output terminal. "L" at L channel and "H" at R channel.
72	BCK	O	Bit clock (1.4112MHz) output terminal
73	AOUT	O	Audio data outptut terminal
74	EMPH	O	Emphasis ON/OFF indicator signal output terminal. "H" at emphasis ON, but "L" at emphasis OFF.
75	DOUT	O	Digital output terminal
76	$\overline{TEST2}$	I	Test terminal. It is normally "H" or open (with pull-up resistor).
77	V_{DDX}	——	Crystal oscillator power supply terminal
78	XI	I	Crystal oscillator connection terminal (Crystal oscillator frequency:16.9344MHz)
79	XO	O	
80	GNDX	——	Crystal oscillator section gland terminal

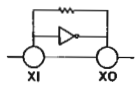

■ IC701 μ PD75336GC-120 (121:VX Version) (System Controller)

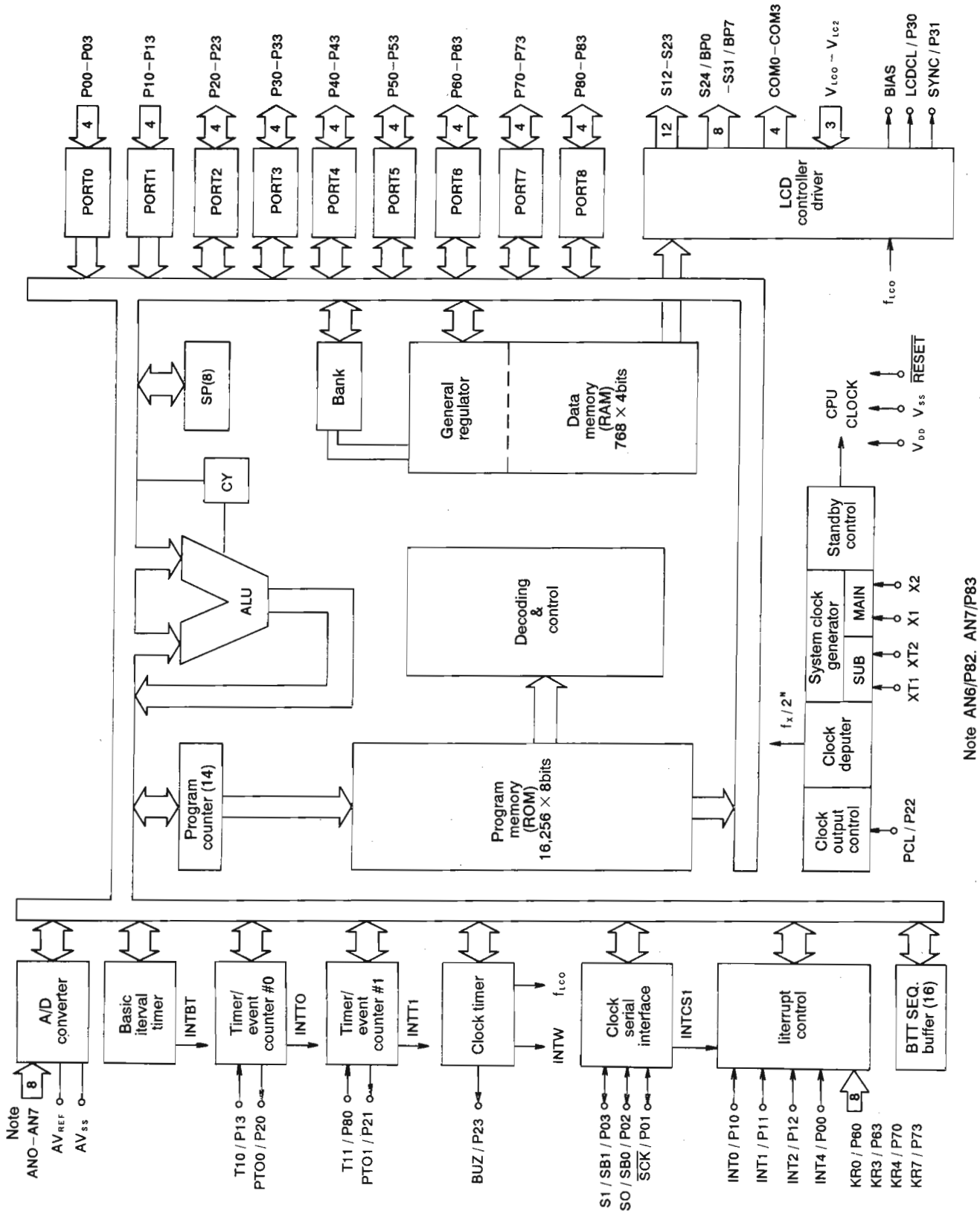

Fig. 10-3

● **IC701(SYSTEM CONTROLLER): μ PD75336GC-120**

Pin No.	Terminal Name	Abbreviation	I/O	Description of Function
1	S31	SEG0	O	LCD segment 0
2	S30	SEG1	O	LCD segment 1
3	S29	SEG2	O	LCD segment 2
4	S28	SEG3	O	LCD segment 3
5	S27	SEG4	O	LCD segment 4
6	S26	SEG5	O	LCD segment 5
7	S25	SEG6	O	LCD segment 6
8	S24	SEG7	O	LCD segment 7
9	S23	SEG8	O	LCD segment 8
10	S22	SEG9	O	LCD segment 9
11	S21	SEG10	O	LCD segment 10
12	S20	SEG11	O	LCD segment 11
13	S19	SEG12	O	LCD segment 12
14	S18	SEG13	O	LCD segment 13
15	S17	SEG14	O	LCD segment 14
16	S16	SEG15	O	LCD segment 15
17	S15	SEG16	O	LCD segment 16
18	S14	SEG17	O	LCD segment 17
19	S13	SEG18	O	LCD segment 18
20	S12	SEG19	O	LCD segment 19
21	COM0	COM0	O	LCD common
22	COM1	COM1	O	LCD common
23	COM2	COM2	O	LCD common
24	COM3	COM3	O	LCD common
25	BIAS	LCDB	O	LCD drive power source
26	VLC0	VLC0	I	LCD drive power source
27	VLC1	VLC1	I	LCD drive power source
28	VLC2	VLC2	I	LCD drive power source
29	P40	MT0	O	CD tray motor voltage control 0

Pin No.	Terminal Name	Abbreviation	I/O	Description of Function1
30	P41	MT1	O	CD tray motor voltage control 1
31	P42	SMUTE	O	System mute output
32	P43	PBMUTE	O	Tape play mute
33	VSS	VSS	–	Microcomputer GND
34	P50	BIAS	O	REC. bias auto-beat cutting
35	P51	NC	O	Not used
36	P52	VOLST	O	Serial volume control latch output
37	P53	TUST	O	Tuner PLL strobe output
38	P00	$\overline{PIN}$	I	Power switch input
39	SCK	CK	O	Serial clock
40	CB0	DATA	I/O	Serial data
41	P03	RECSW	I	Record switch input
42	INT0	$\overline{REM}$	I	Remote control input
43	P11	NC	I	Not used
44	P12	BUP	I	Backup detector
45	P13	$\overline{AC/DC}$	I	AC/DC decision
46	P20	RECH	O	Recorder amplifier power control
47	P21	$RCrO_2$	O	Chromium tape recorder control
48	P22	RECB	O	Recorder bias control
49	P23	SENSOR	O	Remote control cord output
50	P30	PB70	O	Play equalizer control
51	P31	$\overline{XRST}$	O	CD LSI reset
52	P32	BUCK	O	CD communication bus clock
53	P33	CCE	O	CD communication chip nail
54	P80	BUS0	I/O	CD communication data bus 0
55	P81	BUS1	I/O	CD communication data bus 1
56	P82	BUS2	I/O	CD communication data bus 2
57	P83	BUS3	I/O	CD communication data bus 3
58	AN0	JACK/MPX	I	MIC jack switch/stereo indicator input

Pin No.	Terminal Name	Abbreviation	I/O	Description of Function1
59	AN1	DOORSW	I	Common OPEN/CLOSE/RESET input
60	AN2	SAFETY	I	Abnormal voltage detection monitor input
61	AN3	KEY3	I	Key input 3
62	AN4	KEY1	I	Key input 1
63	AN5	KEY2	I	Key input 2
64	AV_{SS}	AV_{SS}	–	AD gland
65	AV_{REF}	AV_{REF}	–	AD power source
66	DV_{DD}	DV_{DD}	–	Microcomputer system +B
67	XT1	XT1	I	Sub-clock input (32.768kHz)
68	XT2	XT2	O	Sub-clock input (32.768kHz)
69	IC	IC	–	–
70	X1	X1	I	System clock input (4.19MHz)
71	X2	X2	O	System clock output (4.19MHz)
72	$\overline{RESET}$	$\overline{RESET}$	I	Microcomputer reset input
73	P60	$\overline{BEAT}$	O	Beat output
74	P61	XTSTOP	O	Sub-clock control
75	P62	+BCTL	O	AD power source control
76	P63	FTU	O	Tuner power source control
77	P70	FAUX	O	AUX. control
78	P71	FCD	O	CD power source control
79	P72	LED	O	LED control
80	P73	POUT	O	System power source control

11. Standard Schematic Diagram

Pre-Amplifier Circuit: Draw

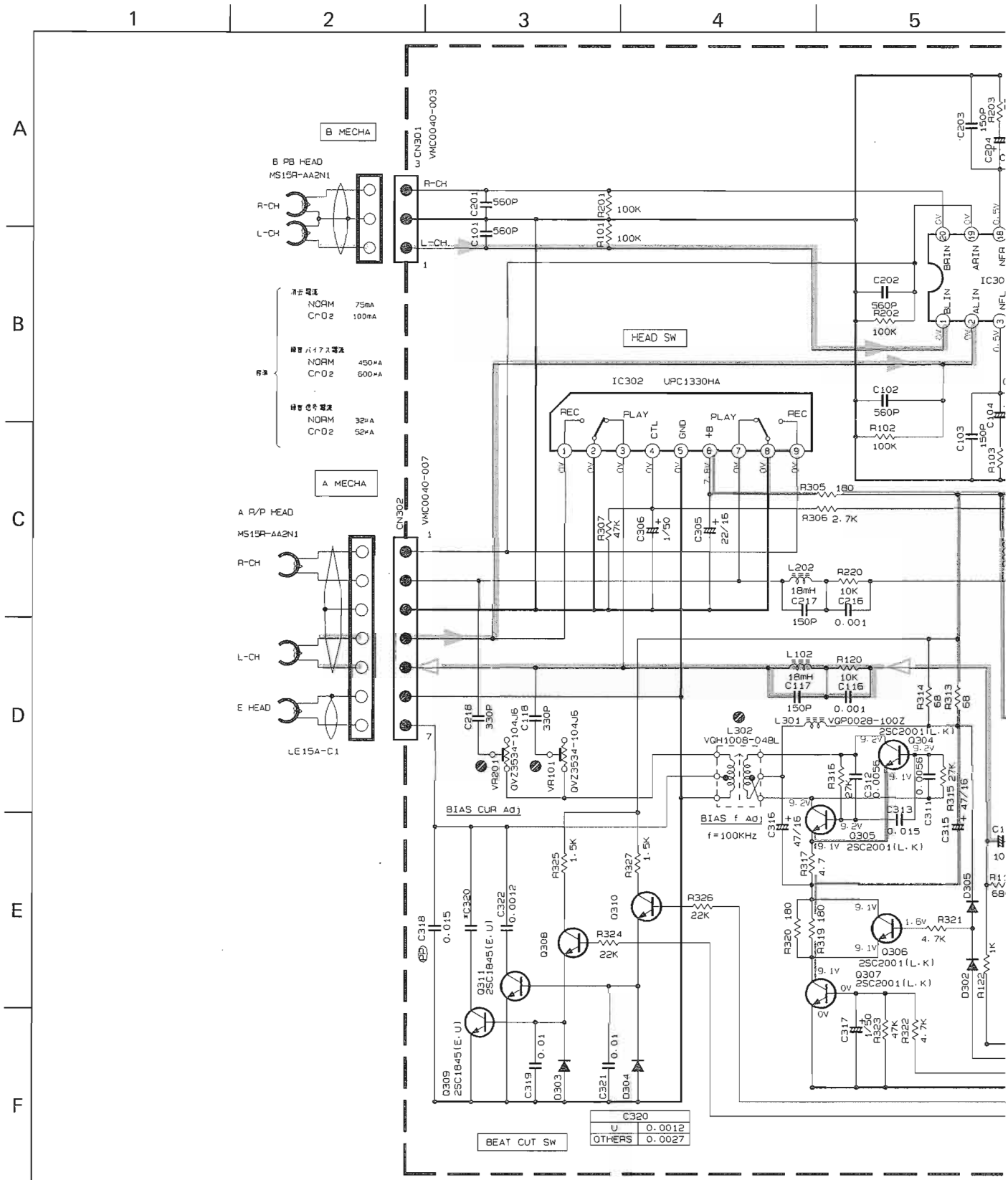

TABLE 1 DIGITAL T.R LIST

Q102/Q202 Q303	47K	DTC144TS BA1L4Z
Q310	10K	DTC114TS BA1A4Z
Q301	47K 47K	DTC144ES BA1L4M

NOTES

1. VOLTAGES ARE DC-MEASURED WITH A DIGITAL VOLT METER OR OSCILLOSCOPE WITHOUT INPUT SIGNAL.
CONDITION : TAPE MODE A MECHA PB.

Fig. 11-

:: Drawing No. VDH9240-001AW

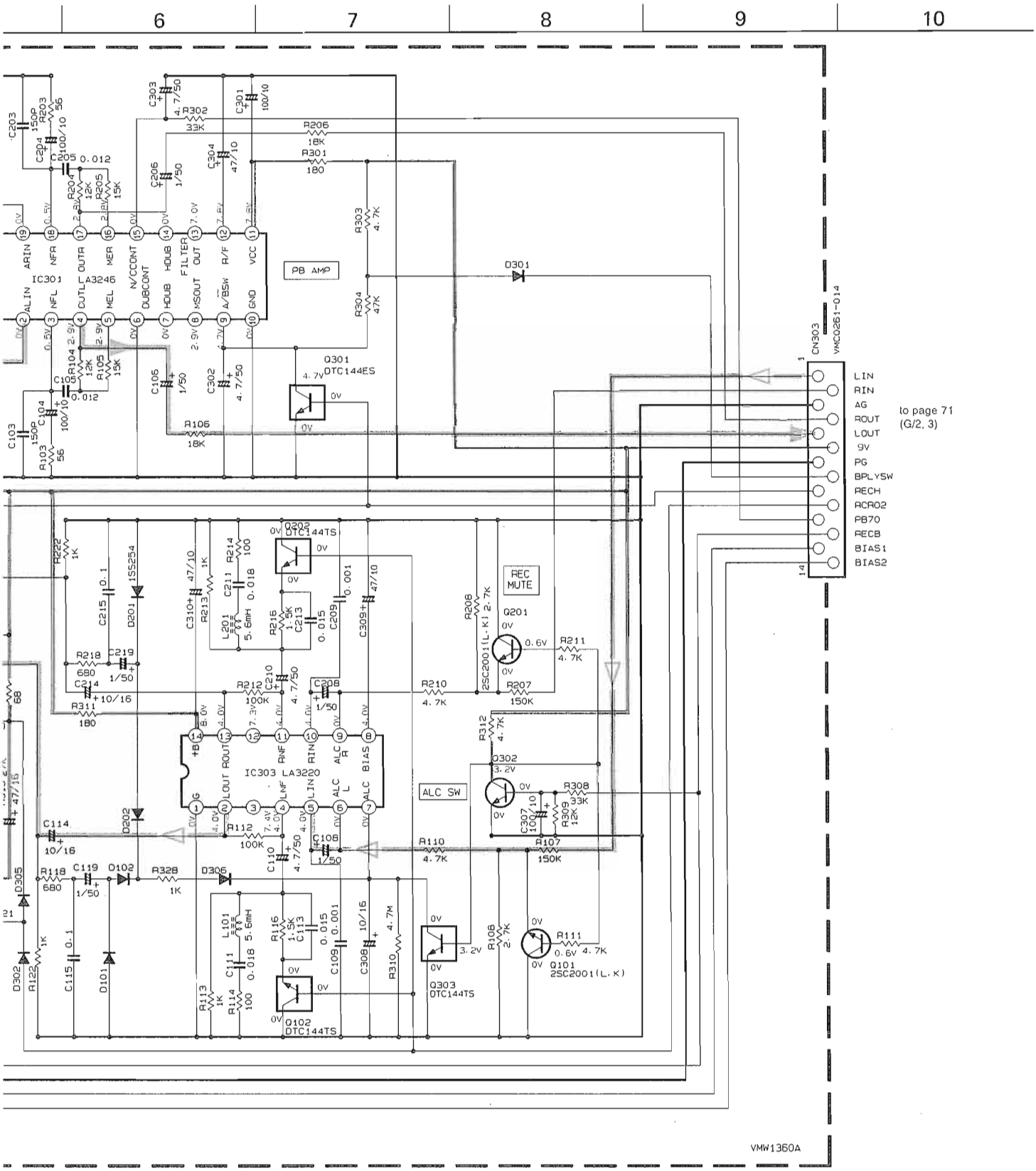

REC Signal

Tape playback signal

+B Line

2. UNLESS OTHERWISE SPECIFIED · RESISTORS ARE 1/6W ±5% CARBON RESISTOR.
ALL RESISTANCE VALUES ARE IN OHM(Ω).
ALL CAPACITORS ARE CERAMIC CAPACITOR OR MYLAR CAPACITOR.
ALL CAPACITANCE VALUES ARE IN μF(P=pF).
ALL INDUCTANCE VALUES ARE IN μH(m=mH).
ALL E.CAPACITORS ARE SHOWN IN THE FORM OF CAPACITANCE (μF)/RATED VOLTAGE (V).
ALL DIODES ARE 1SS254T OR HSS104T
ALL NPN TRANSISTORS ARE 2SC3330(S·T) OR 2SC2785(E·F).

T METER

ig. 11-1

Power Supply & Power Amplifier Circuit: Drawing No. VDH9240-005AV

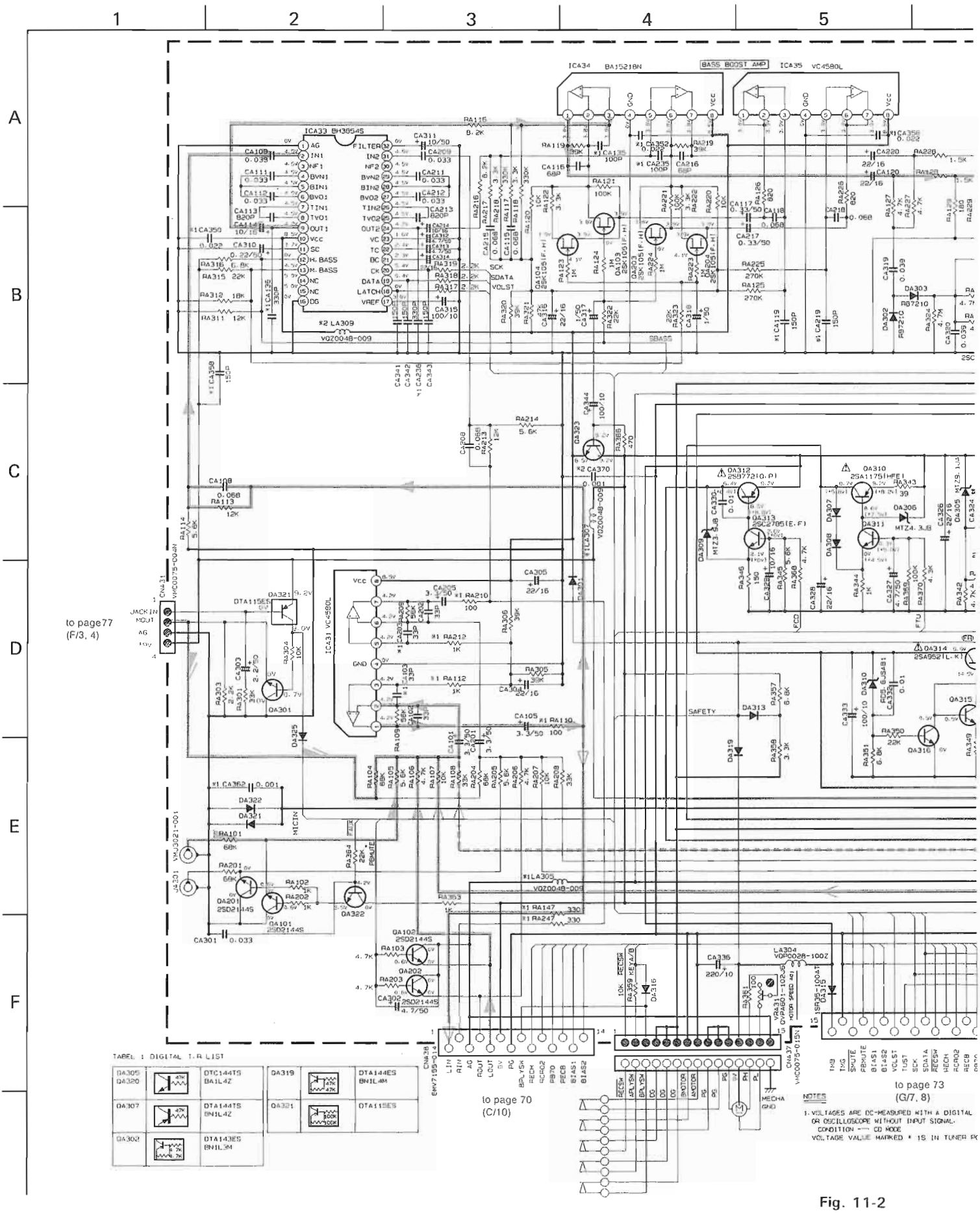

Fig. 11-2

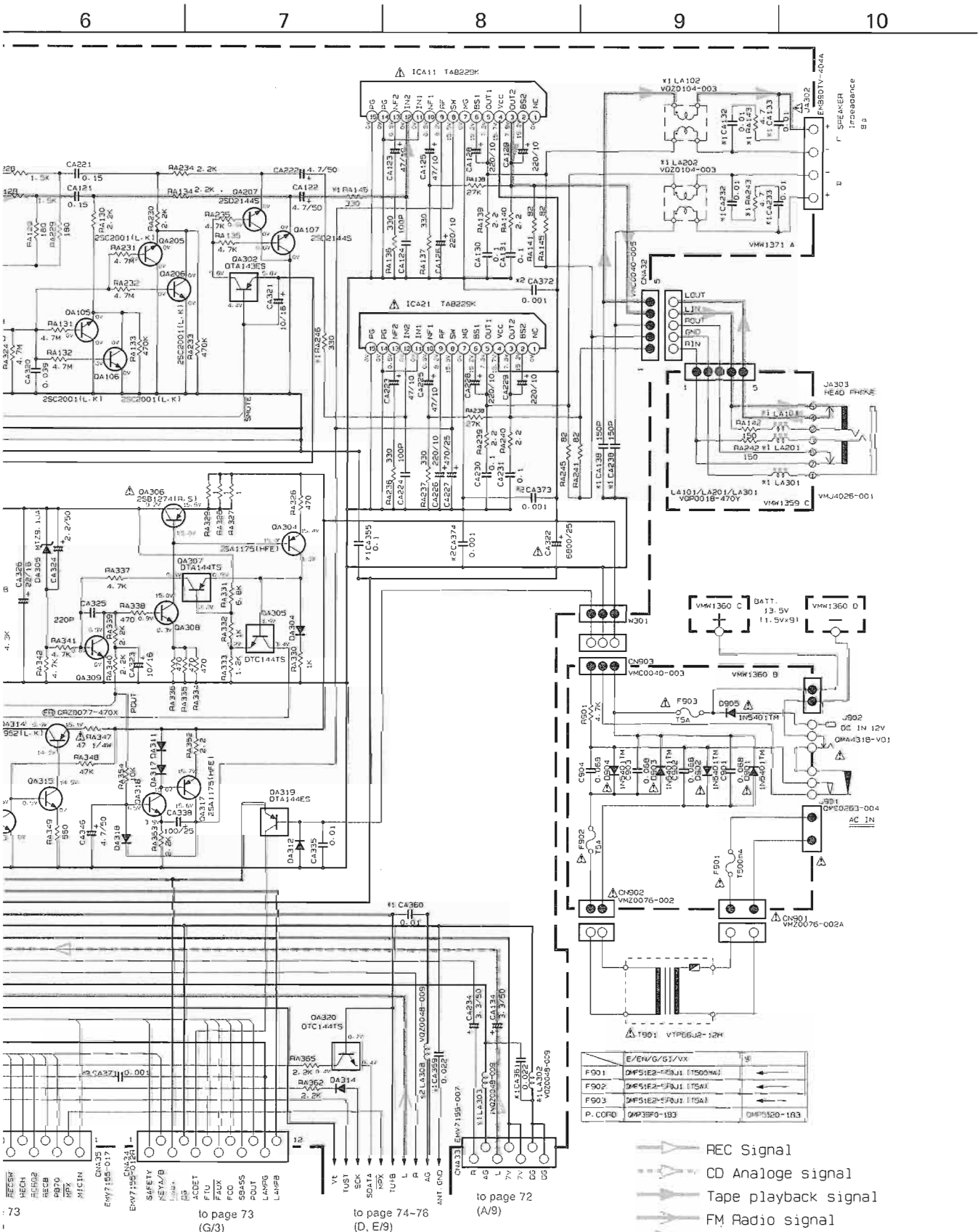

	E/EN/G/GI/VX	
F901	QMF51E2-500J1 (T500mA)	
F902	QMF51E2-500J1 (T5A)	
F903	QMF51E2-500J1 (T5A)	
P. CORD	QMP35F0-183	QMP5520-183

REC Signal
CD Analoge signal
Tape playback signal
FM Radio signal
AUX IN Signal
MIC IN Signal
+B Line

4 A DIGITAL VOLT METER SIGNAL.

IN TUNER POSITON

2. UNLESS OTHERWISE SPECIFIED, RESISTORS ARE 1/6W ±5% CARBON RESISTOR.
ALL RESISTANCE VALUES ARE IN OHM(Ω).
ALL CAPACITORS ARE CERAMIC CAPACITOR OR MYLAR CAPACITOR.
ALL CAPACITANCE VALUES ARE IN μF(P=pF).
ALL INDUCTANCE VALUES ARE IN μH(m=mH).
ALL E-CAPACITORS ARE SHOWN IN THE FORM OF CAPACITANCE (μF)/RATED VOLTAGE (V).
ALL DIODES ARE 1SS254T OR HBS104T.
ALL NPN TRANSISTORS ARE 2SC3339(S, T) OR 2SC2709(E, F).
3. *1, *2 MARK ARE FOR USE B/E/EN/G/GI VERSION
*1: B/E/EN/G/GI *1~
*2: EN *3001~ B/E/G/GI *1~

CD Amplifier Circuit: Drawing No. VDH9240-101CV

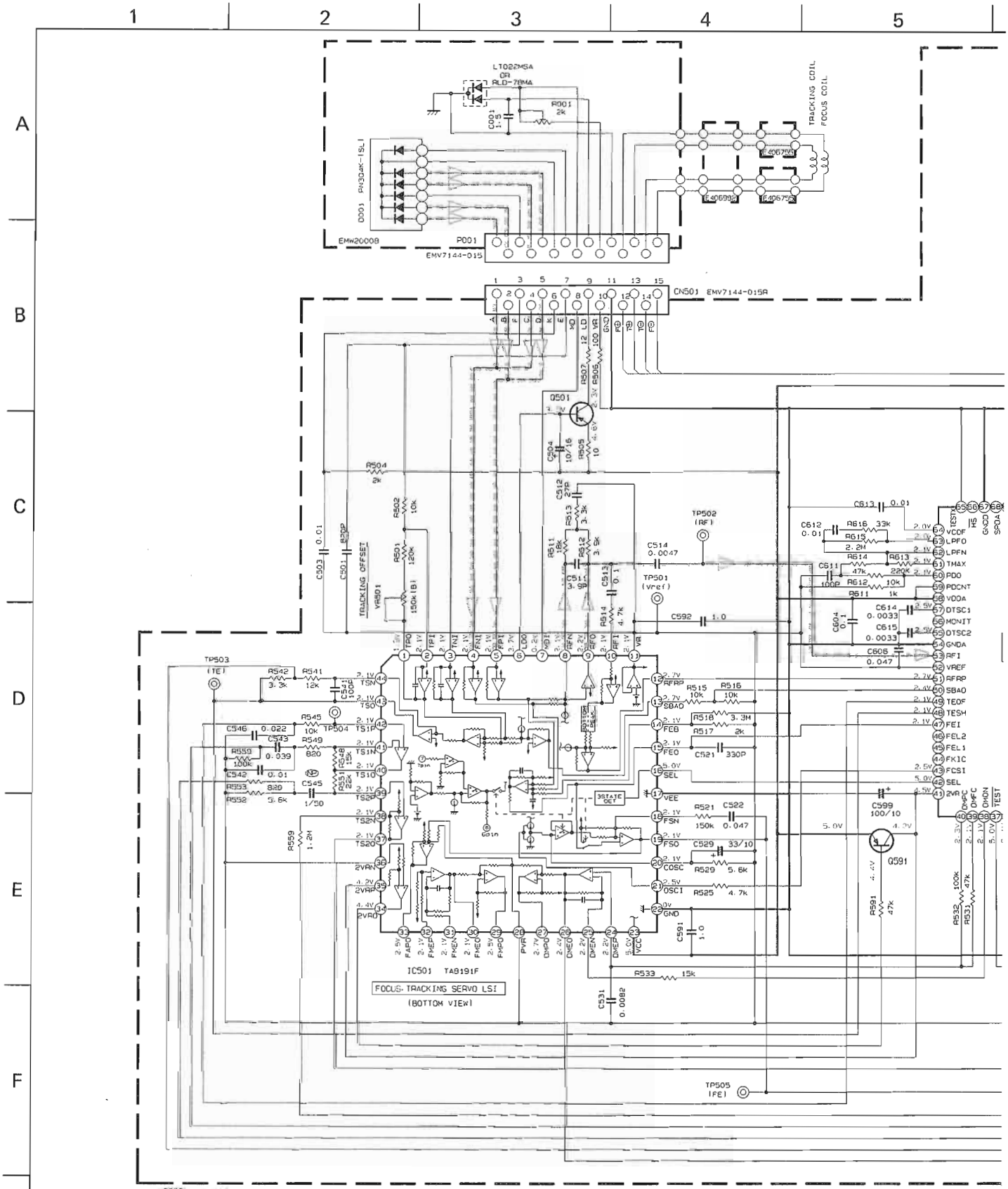

NOTES:
1. VOLTAGES ARE DC-MEASURED WITH A DIGITAL VOLT METER IN PLAYBACK
2. UNLESS OTHERWISE SPECIFIED, RESISTORS ARE 1/6W ±5% CARBON RESISTOR.
ALL RESISTANCE VALUES ARE IN OHM(Ω).
ALL CAPACITORS ARE CERAMIC CAPACITOR OR MYLAR CAPACITOR.
ALL CAPACITANCE VALUES ARE IN μF(P:pF).
ALL INDUCTANCE VALUES ARE IN μH(m:mH).
ALL E.CAPACITORS ARE SHOWN IN THE FORM OF CAPACITANCE (μF)/RATED VOLTAGE (V).

(13) UNFLAMMABLE CARBON RESISTOR
(14) METAL FILM RESISTOR
(16) OXIDE METAL FILM RESISTOR
(21) ±20% LOW LEAK CURRENT ELECTROLYTIC CAPACITOR
(19) NON-POLARISED ELECTROLYTIC CAPACITOR
(23) POLYPROPYLENE CAPACITOR
(25) POLYSTYROL CAPACITOR

Q501	2SA952(L,K)
Q591	[redacted]
Q591	2SA1309(A,S) OR 2SA1175(HFE) OR 2SA933S(RS)
D601	MA700A OR RB7210
D591	MA165 OR HSS104TJ OR 1SS254T-77

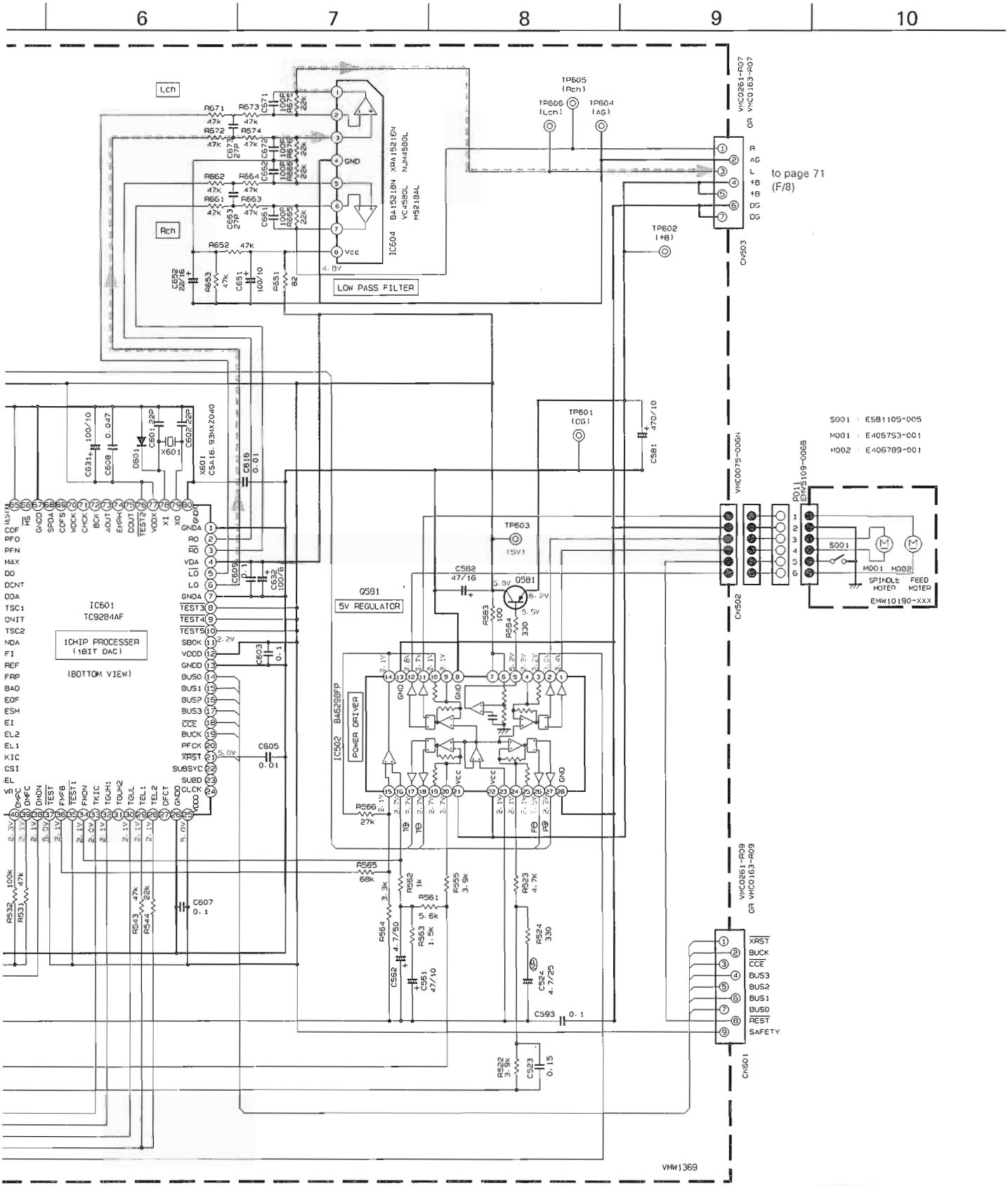

CD Digital signal
CD Analog signal
CD-G signal
+B Line

Fig. 11-3

System Control Circuit: Drawing No. VDH9240-005SV

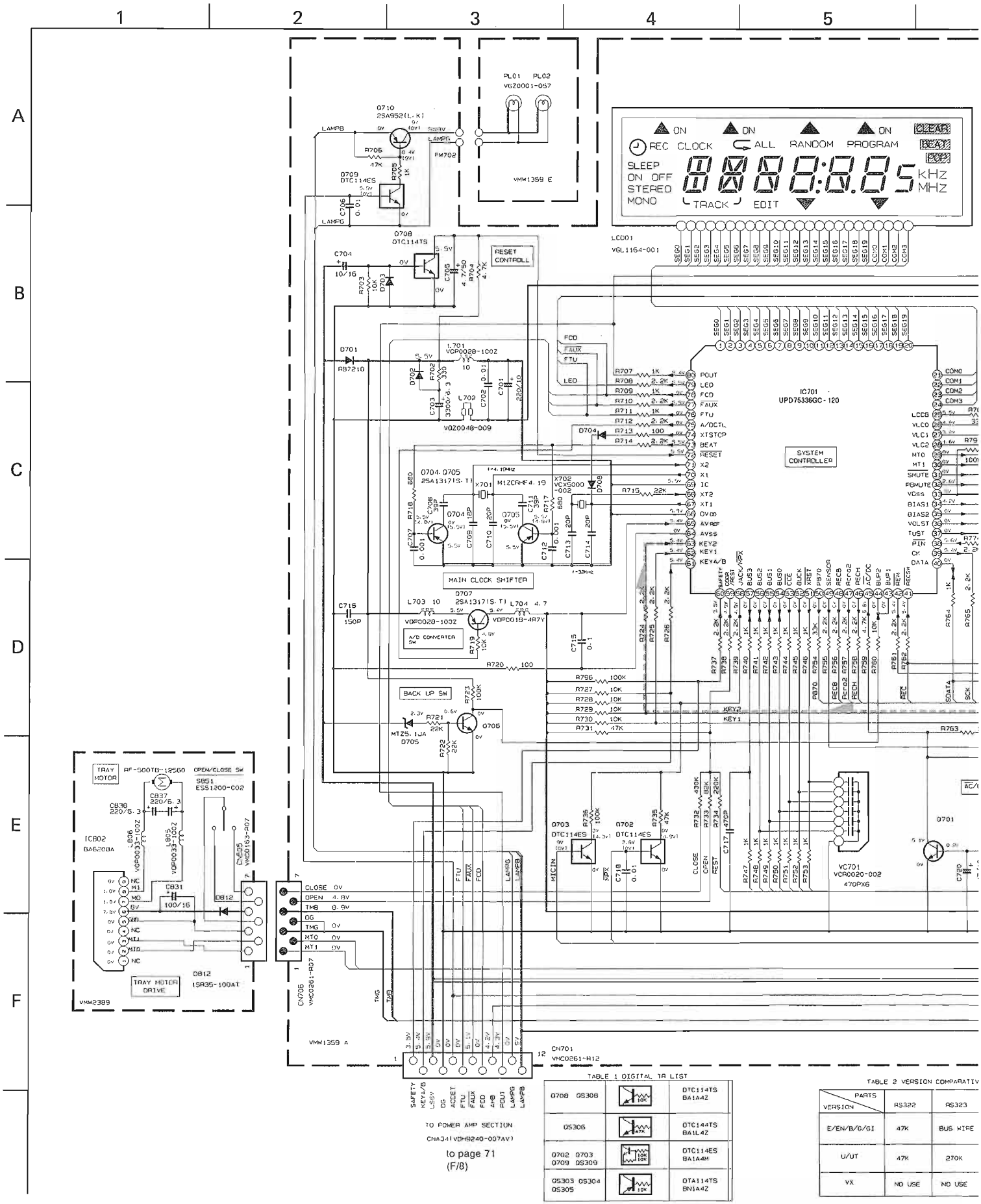

TABLE 1 DIGITAL IC LIST

Q708 Q5308	10K	DTC114TS BA1A4Z
Q5306	47K	DTC144TS BA1L4Z
Q702 Q703 Q709 Q5309	10K 10K	DTC114ES BA1A4M
Q5303 Q5304 Q5305	10K	DTA114TS BN1A4Z

TABLE 2 VERSION COMPARATIV

PARTS / VERSION	RS322	RS323
E/EN/B/G/GI	47K	BUS WIRE
U/UT	47K	270K
VX	NO USE	NO USE

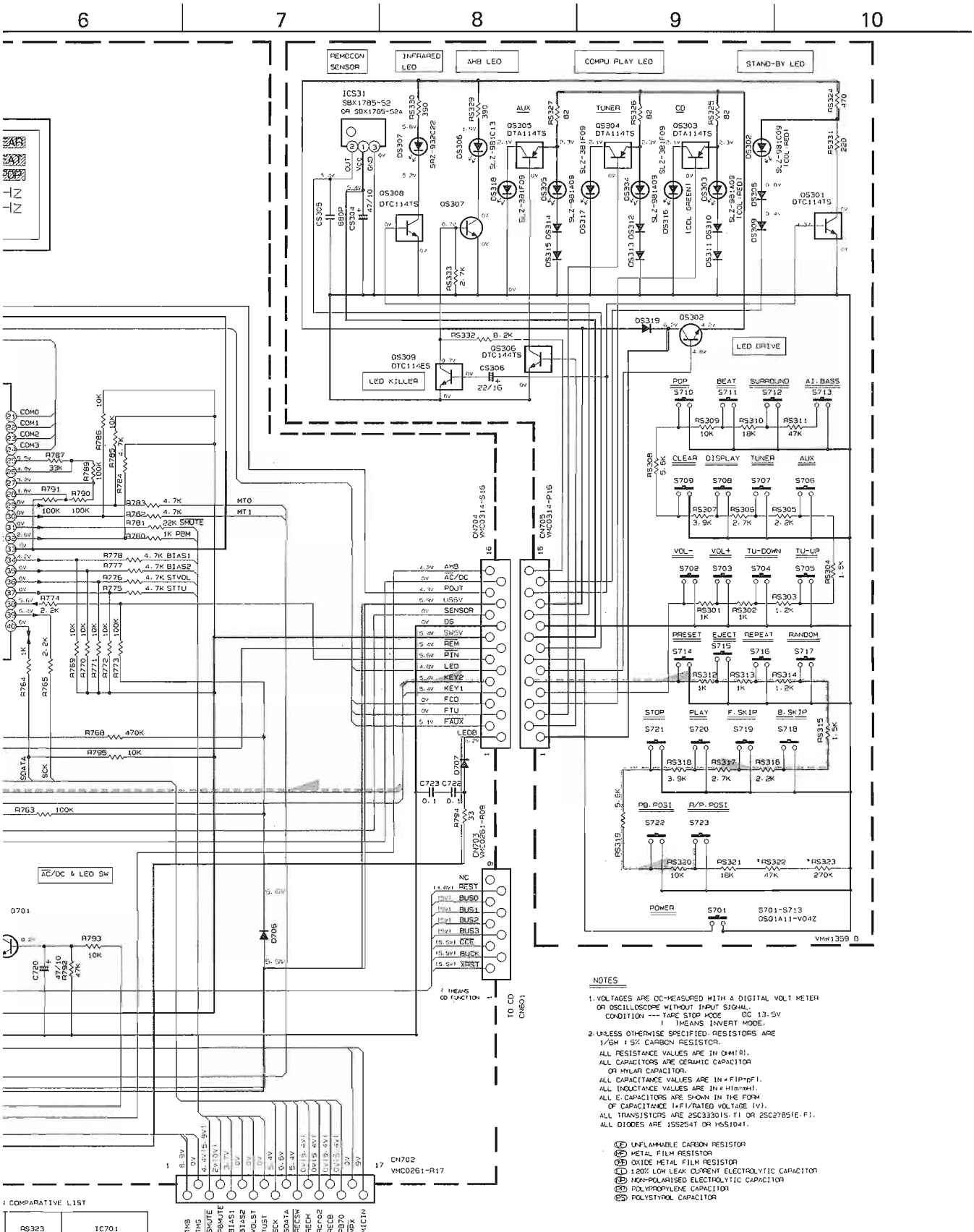

COMPARATIVE LIST

RS323	IC701
BUS WIRE	UPD75336GC-120
270K	UPD75336GC-120
NO USE	UPD75336GC-121

Fig. 11-4

Tuner Circuit: Drawing No. VDH9240-015TW (HX-5EN #1~#3,000)

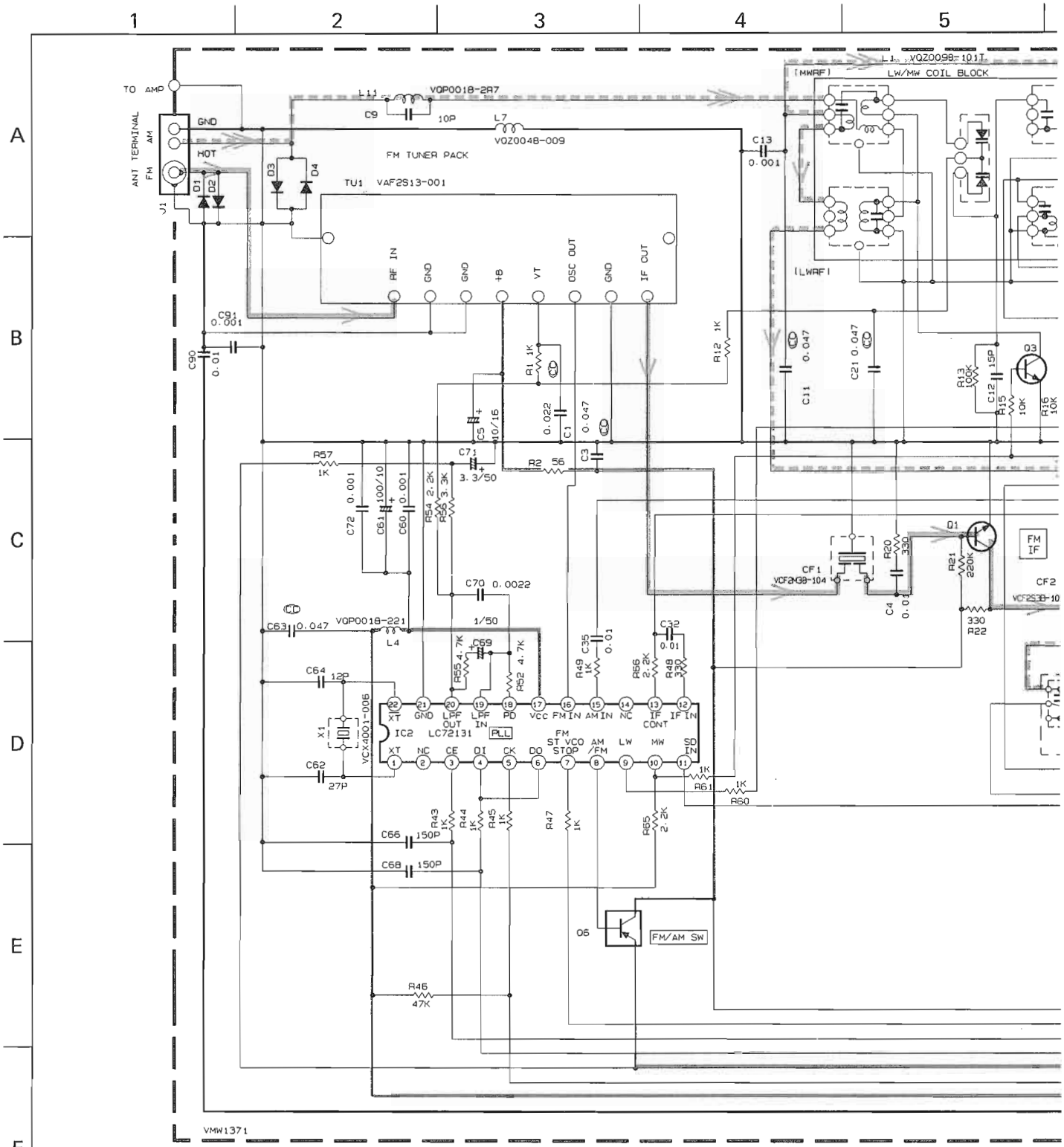

	CONDITION PIN NO.	1	2	3	4	5	6	7	8	9	10	11	12	13	14	15	16	17	18	19	20	21	22	23	24
IC1	FM NO SIGNAL	2.0	0.5	0	2.0	5.1	5.1	0	0	0.2	5.0	5.0	1.1	1.1	4.4	3.6	3.6	1.4	0	1.3	1.1	2.0	2.0	5.1	2.0
	FM 60dB STEREO	2.0	0.5	0	2.0	5.1	5.1	1.1	0	0.2	0	0	1.1	1.1	4.4	4.0	3.7	1.4	0	1.4	1.1	2.0	2.0	5.1	2.0
	AM NO SIGNAL	2.0	0.5	0	2.0	4.8	5.1	0	0	0.2	5.1	5.1	1.1	1.1	4.6	2.1	0.6	1.4	1.4	1.5	1.5	2.0	2.0	5.1	2.0
IC2	FM NO SIGNAL	2.6	0	0	5.2	5.0	5.2	3.7	0	2.0	3.9	5.0	0	0	0	0	2.5	5.0	1.1	1.1	1.6	0	2.5		

Tr NO.
PIN NO.
FM 87.5MHz NO SIGNAL
AM 522KHz NO SIGNAL
Tr NO.
PIN NO.
AM 522KHz NO SIGNAL
AM 144KHz NO SIGNAL

Fig. 11-5

6 | 7 | 8 | 9 | 10

NOTES

1. VOLTAGES ARE DC-MEASURED WITH A DIGITAL VOLT METER.
2. ALL RESISTORS ARE 1/6W 5% CARBON RESISTOR.
3. ALL RESISTANCE VALUES ARE IN OHM(Ω).
4. ALL CAPASITANCE VALUES ARE IN μF(P=pF).
5. ALL E.CAPASITORS ARE SHOWN IN THE FORM OF CAPASITANCE (μF)/RATED VOLTAGE (V).
6. SI.DIODES(▶|) ARE ALL 1SS254T THAT CAN BE CHANGED TO SIMILAR DIODE SUCH AS MA165 OR HSS104J.
7. PARTS NO. OF TRANSISTORS ARE AS FOLLOWS.

Q1	2SC2668	Q2, 6	DTA114YS OR BN1A4P
Q3, 4, 7, 16	2SC2785 OR 2SC3330	Q5	2SA1175 OR 2SA1317

8. INSIDE OF DIGITAL TRANSISTORS ARE SHOWN AS FOLLOWS.

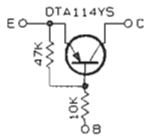

9. LAST NO. BLANK NO.
   R78 R 3~9, 11, 14, 17~19, 23, 32, 40~42, 53, 58~59, 62~64, 67~69, 76, 77
   C92 C 6, 10, 14~20, 22~29, 48, 56~59, 67, 73~89

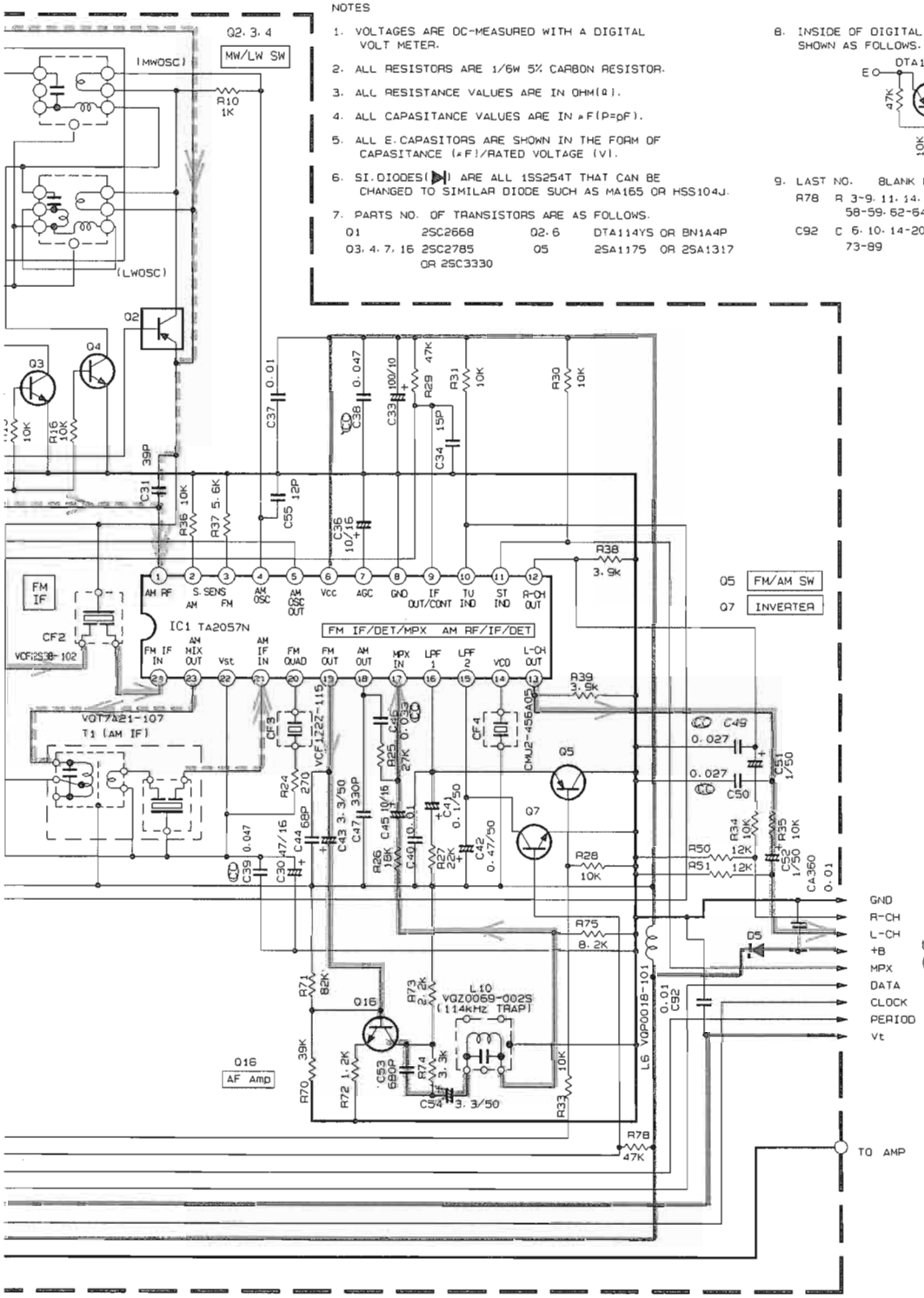

NO.	Q1			Q3			Q5			Q16			Q7		
NO.	E	C	B	E	C	B	E	C	B	E	C	B	E	C	B
NO SIGNAL	0	8.0	0.7	3.7	0	4.6	9.3	9.2	0.1	1.0	3.3	1.6	0	3.9	0.1
NO SIGNAL	0	0	0	0.6	0	0	3.3	0	9.2	1.0	3.3	1.6	0	3.9	0.1

NO.	Q2			Q3			Q4		
NO.	E	C	B	E	C	B	E	C	B
NO SIGNAL	3.0	2.0	0.2	0	0	0.7	0	0	0.7
NO SIGNAL	3.0	3.0	2.0	0	0	0.1	0	0	0.1

FM Radio signal
LW Radio signal
MW Radio signal
+B Line

Drawing No. VDH9240-005TW (HX-5 B/E/G/GI/EN #3,001~)

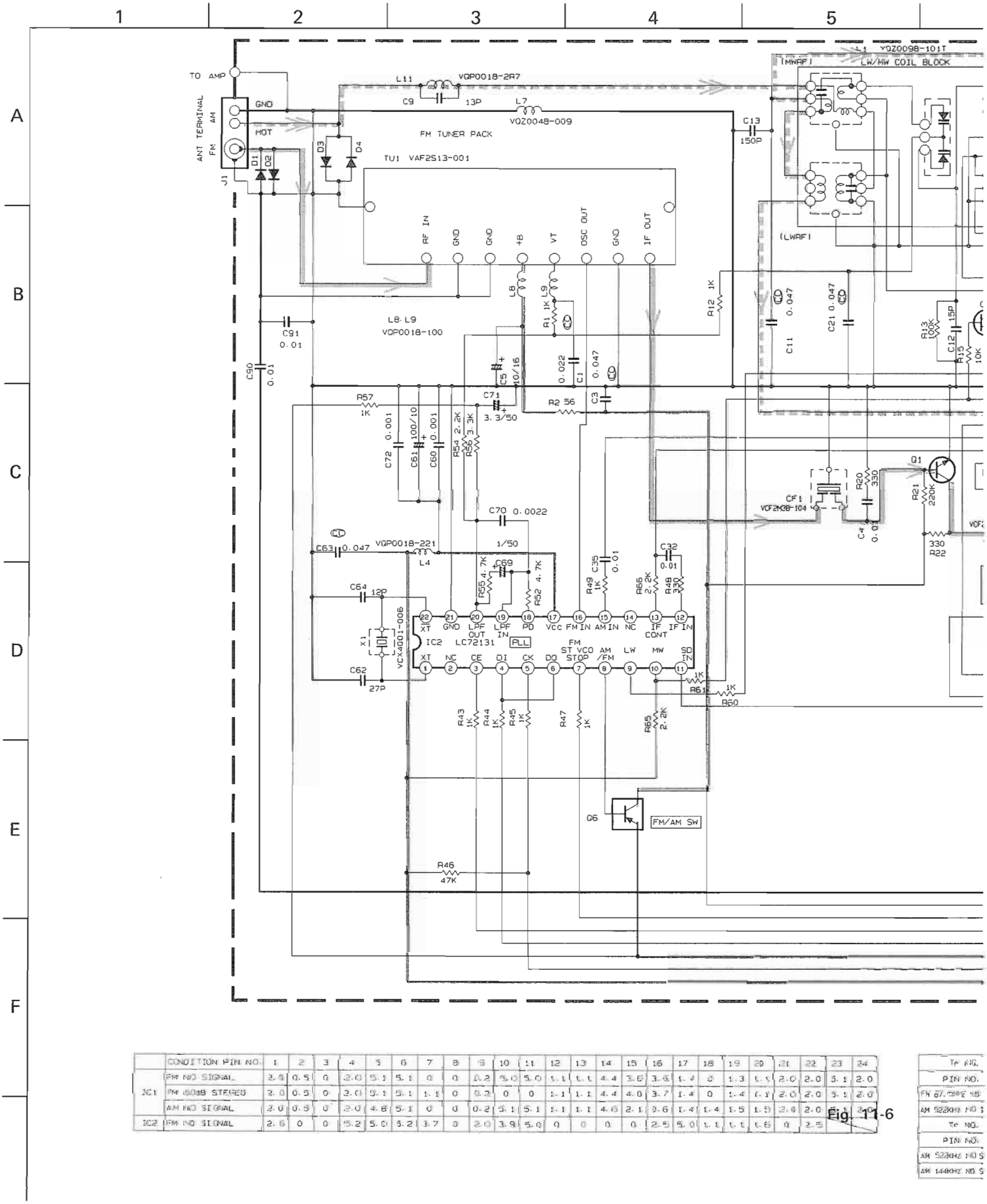

	CONDITION PIN NO.	1	2	3	4	5	6	7	8	9	10	11	12	13	14	15	16	17	18	19	20	21	22	23	24
IC1	FM NO SIGNAL	2.4	0.5	0	2.0	5.1	5.1	0	0	0.2	5.0	5.0	1.1	1.1	4.4	3.6	3.6	1.4	0	1.3	1.1	2.0	2.0	5.1	2.0
	FM 60dB STEREO	2.0	0.5	0	2.0	5.1	5.1	1.1	0	0.2	0	0	1.1	1.1	4.4	4.0	3.7	1.4	0	1.4	1.1	2.0	2.0	5.1	2.0
	AM NO SIGNAL	2.0	0.5	0	2.0	4.8	5.1	0	0	0.2	5.1	5.1	1.1	1.1	4.6	2.1	0.6	1.4	1.4	1.5	1.9	2.0	2.0	5.1	2.0
IC2	FM NO SIGNAL	2.6	0	0	5.2	5.0	5.2	3.7	0	2.0	3.9	5.0	0	0	0	0	2.5	5.0	1.1	1.1	1.6	0	2.5		

TP NO.
PIN NO.
FM 87.5MHZ NO S
AM 522KHZ NO S
TP NO.
PIN NO.
AM 522KHZ NO S
AM 144KHZ NO S

Fig. 11-6

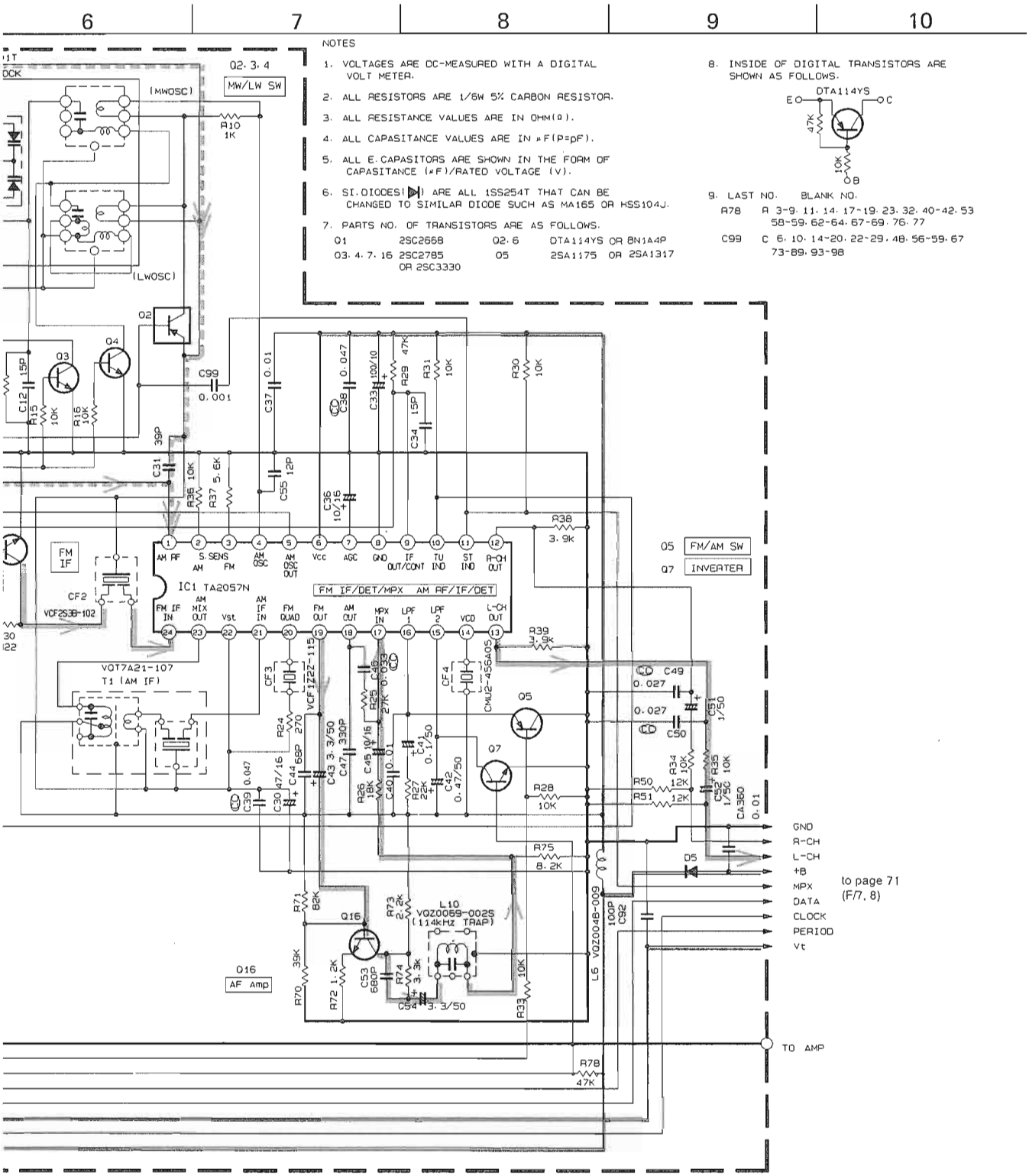

Tr NO.	Q1			Q5			Q6			Q16			Q7		
PIN NO.	E	C	B	E	C	B	E	C	B	E	C	B	E	C	B
87.5MHz NO SIGNAL	0	8.0	0.7	3.7	0	4.6	9.3	9.2	0.1	1.0	3.3	1.6	0	3.9	0.1
522KHz NO SIGNAL	0	0	0	0.6	0	0	9.3	0	9.2	1.0	3.3	1.6	0	3.9	0.1

Tr NO.	Q2			Q3			Q4		
PIN NO.	E	C	B	E	C	B	E	C	B
522KHz NO SIGNAL	2.0	2.0	0.2	0	0	0.7	0	0	0.7
144KHz NO SIGNAL	2.0	2.0	2.0	0	0	0.1	0	0	0.1

FM Radio signal
LW Radio signal
MW Radio signal
+B Line

Drawing No. VDH9240-012TW (HX-5VX)

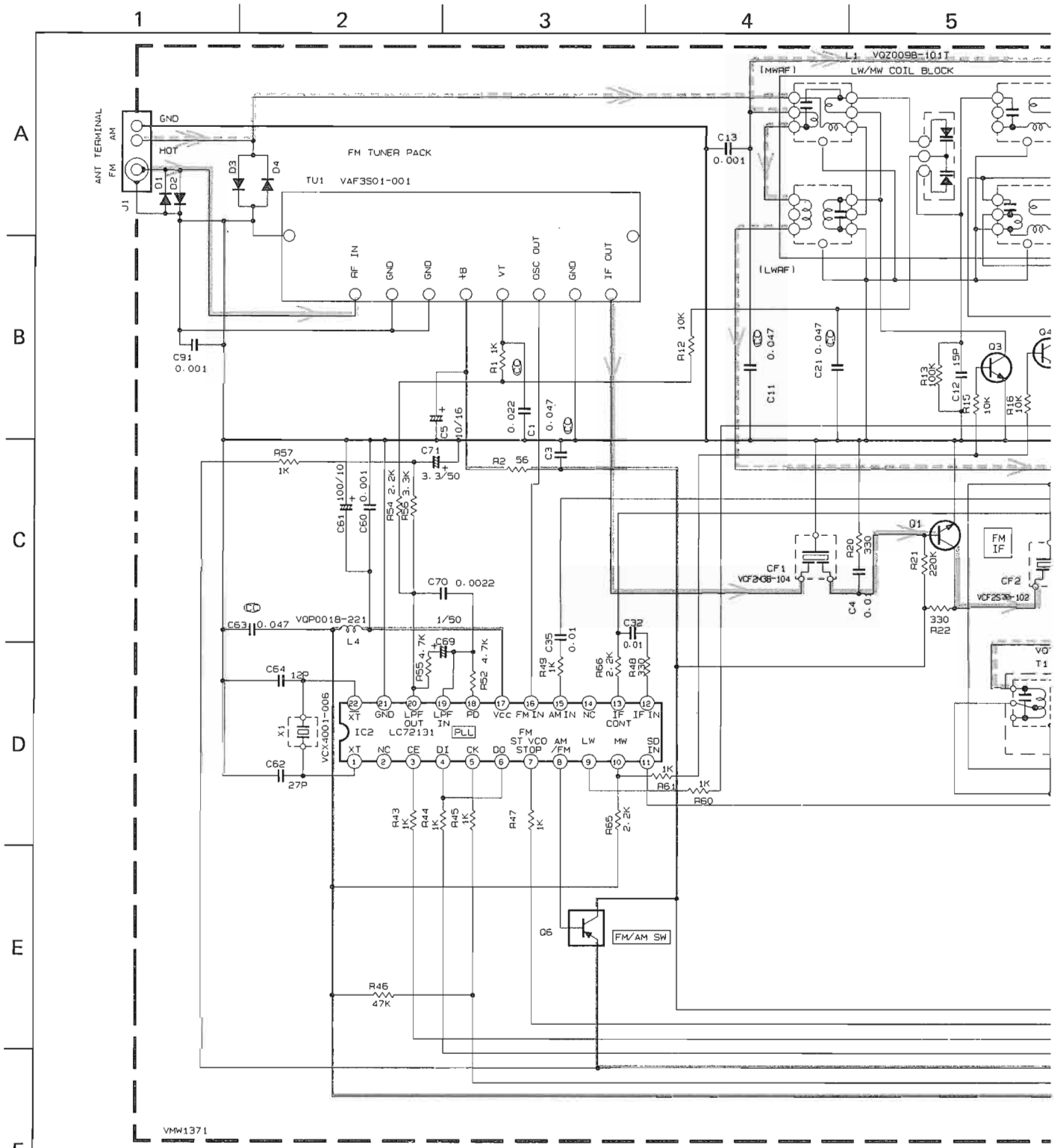

	CONDITION PIN NO.	1	2	3	4	5	6	7	8	9	10	11	12	13	14	15	16	17	18	19	20	21	22	23	24
IC1	FM NO SIGNAL	2.0	0.5	0	2.0	5.1	5.1	0	0	0.2	5.0	5.0	1.1	1.1	4.4	3.6	3.5	1.4	0	1.3	1.1	2.0	2.0	5.1	2.0
	FM 60dB STEREO	2.0	0.5	0	2.0	5.1	5.1	1.1	0	0.2	0	0	1.1	1.1	4.4	4.0	3.7	1.4	0	1.4	1.1	2.0	2.0	5.1	2.0
	AM NO SIGNAL	2.0	0.5	0	2.0	4.8	5.1	0	0	0.2	5.1	5.1	1.1	1.1	4.6	2.1	0.8	1.4	1.4	1.5	1.5	2.0	2.0	5.1	2.0
IC2	FM NO SIGNAL	2.6	0	0	5.2	5.0	5.2	3.7	0	2.0	3.9	5.0	0	0	0	0	2.5	5.0	1.1	1.1	1.6	0	2.5		

IC NO.	
PIN NO.	E
FM 87.5MHz NO SIGNAL	0
AM 522KHz NO SIGNAL	0
IC NO.	
PIN NO.	E
AM 522KHz NO SIGNAL	2.0
AM 144KHz NO SIGNAL	2.0

NOTES

1. VOLTAGES ARE DC-MEASURED WITH A DIGITAL VOLT METER.
2. ALL RESISTORS ARE 1/6W 5% CARBON RESISTOR.
3. ALL RESISTANCE VALUES ARE IN OHM(Ω).
4. ALL CAPASITANCE VALUES ARE IN μF(P=pF).
5. ALL E.CAPASITORS ARE SHOWN IN THE FORM OF CAPASITANCE (μF)/RATED VOLTAGE (V).
6. SI.DIODES(▶) ARE ALL 1SS254T THAT CAN BE CHANGED TO SIMILAR DIODE SUCH AS MA165 OR HSS104J.
7. PARTS NO. OF TRANSISTORS ARE AS FOLLOWS.

Q1	2SC2668	Q2, 6	DTA114YS OR BN1A4P
Q3, 4, 7	2SC2785 OR 2SC3330	Q5	2SA1175 OR 2SA1317

8. INSIDE OF DIGITAL TRANSISTORS ARE SHOWN AS FOLLOWS.

9. LAST NO. BLANK NO.
   R78 R 3-9, 11, 14, 17-19, 23, 26, 40-42, 53 58-59, 62-64, 67-69, 76, 77
   C91 C 6-10, 14-20, 22-29, 48, 56-59, 66-68 72-90

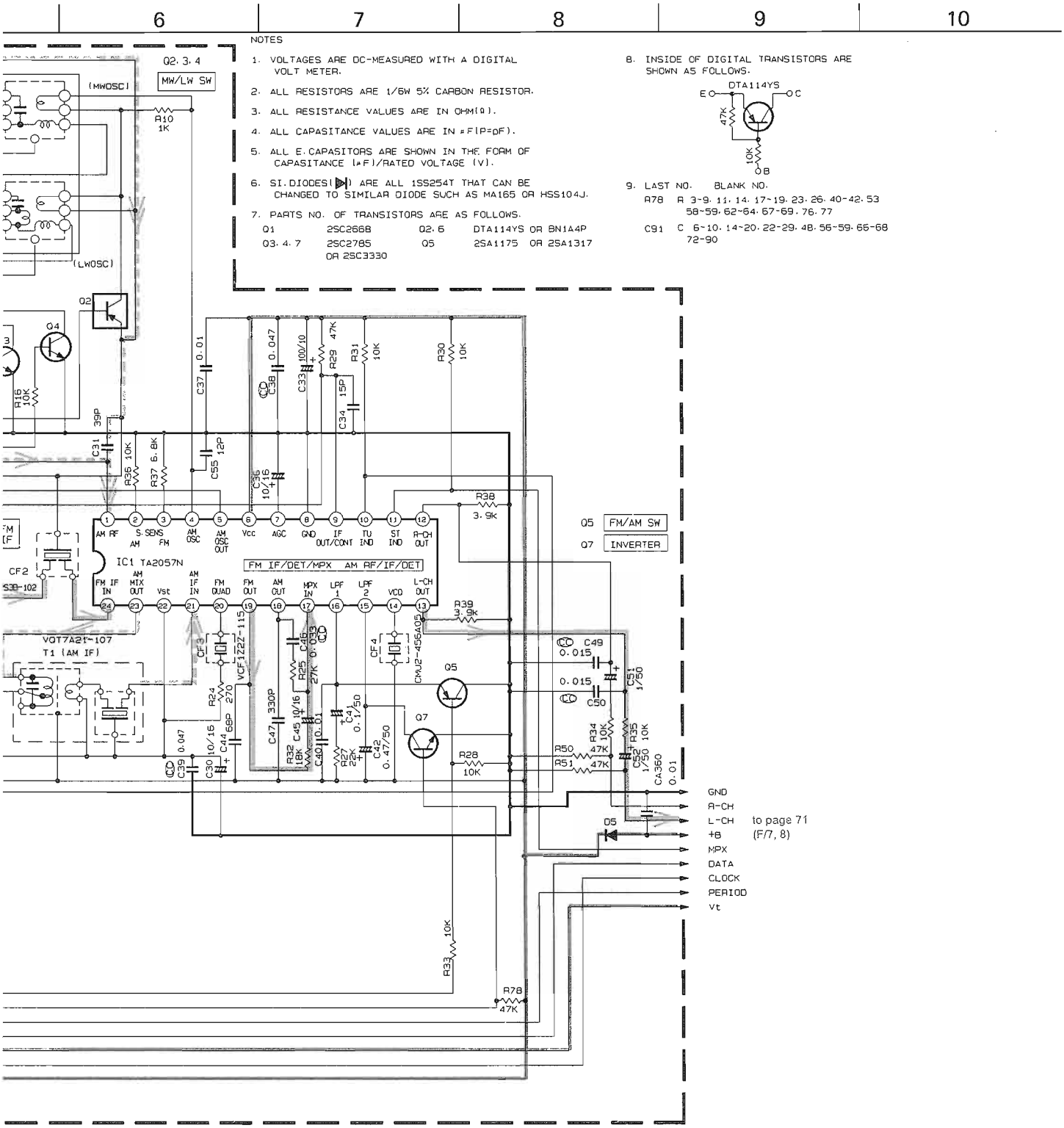

	Q1			Q5			Q6			Q7		
	E	C	B	E	C	B	E	C	B	E	C	B
SIGNAL	0	8.0	0.7	3.7	0	4.5	9.3	9.2	0.1	0	3.9	0.1
IGNAL	0	0	0	0.6	0	0	9.3	0	9.2	0	3.9	0.1

	Q2			Q3			Q4		
	E	C	B	E	C	B	E	C	B
IGNAL	2.0	2.0	0.2	0	0	0.7	0	0	0.7
IGNAL	2.0	2.0	2.0	0	0	0.1	0	0	0.1

FM Radio signal
LW Radio signal
MW Radio signal
+B Line

Mic Ampifier Circuit: Drawing No. VDH9240-001AX

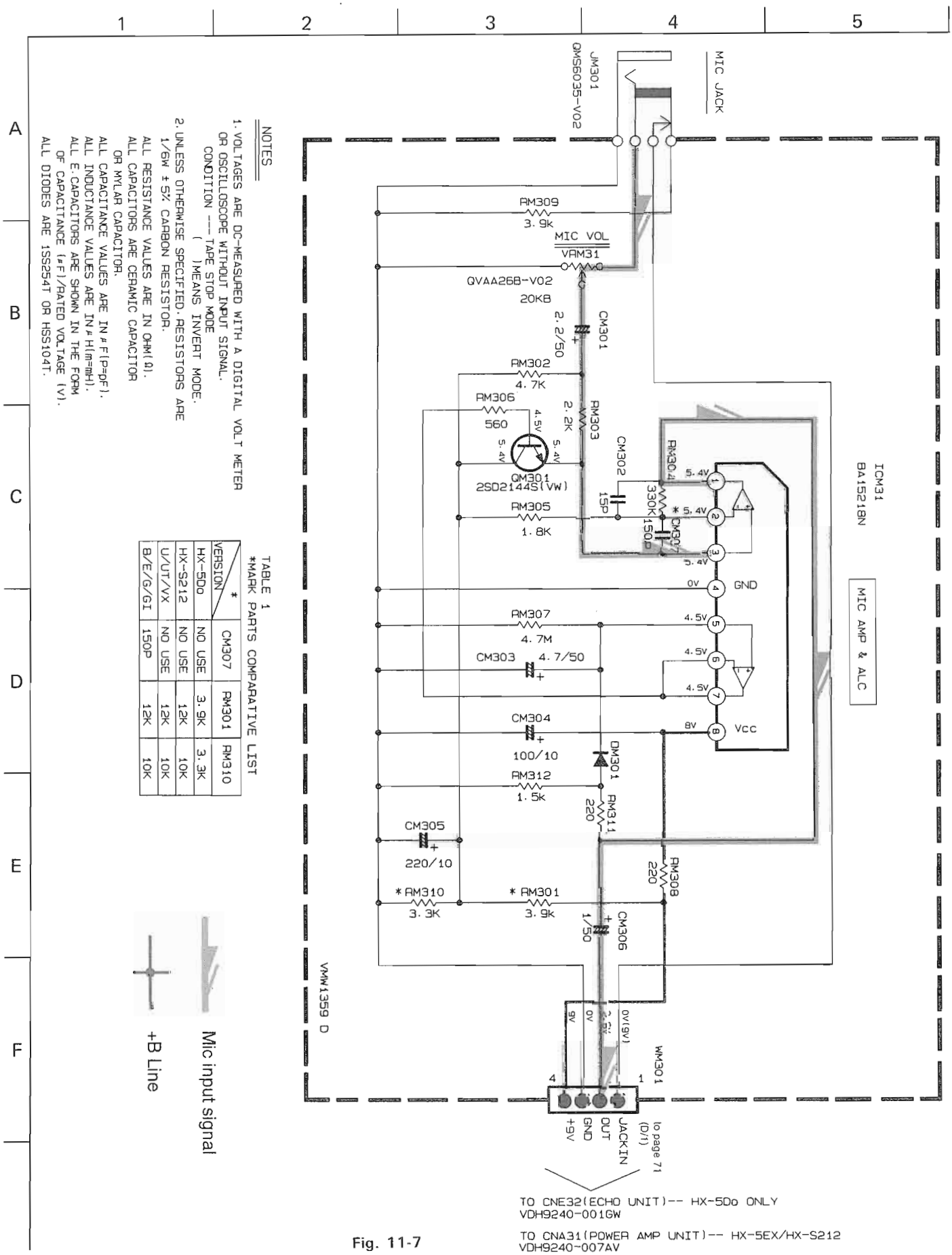

NOTES

1. VOLTAGES ARE DC-MEASURED WITH A DIGITAL VOLT METER OR OSCILLOSCOPE WITHOUT INPUT SIGNAL.
   CONDITION --- TAPE STOP MODE
   ( )MEANS INVERT MODE.
2. UNLESS OTHERWISE SPECIFIED. RESISTORS ARE 1/6W ± 5% CARBON RESISTOR.
   ALL RESISTANCE VALUES ARE IN OHM(Ω).
   ALL CAPACITORS ARE CERAMIC CAPACITOR OR MYLAR CAPACITOR.
   ALL CAPACITANCE VALUES ARE IN μF(P=pF).
   ALL INDUCTANCE VALUES ARE IN μH(m=mH).
   ALL E.CAPACITORS ARE SHOWN IN THE FORM OF CAPACITANCE (μF)/RATED VOLTAGE (V).
   ALL DIODES ARE 1SS254T OR HSS104T.

TABLE 1
*MARK PARTS COMPARATIVE LIST

* / VERSION	CM307	RM301	RM310
HX-5Do	NO USE	3.9K	3.3K
HX-S212	NO USE	12K	10K
U/UT/VX	NO USE	12K	10K
B/E/G/GI	150P	12K	10K

Fig. 11-7

12. Location of P. C. Board Parts

1 2 3 4 5

A B C D E F

CD Amplifier P.C. Board: Block No. 04

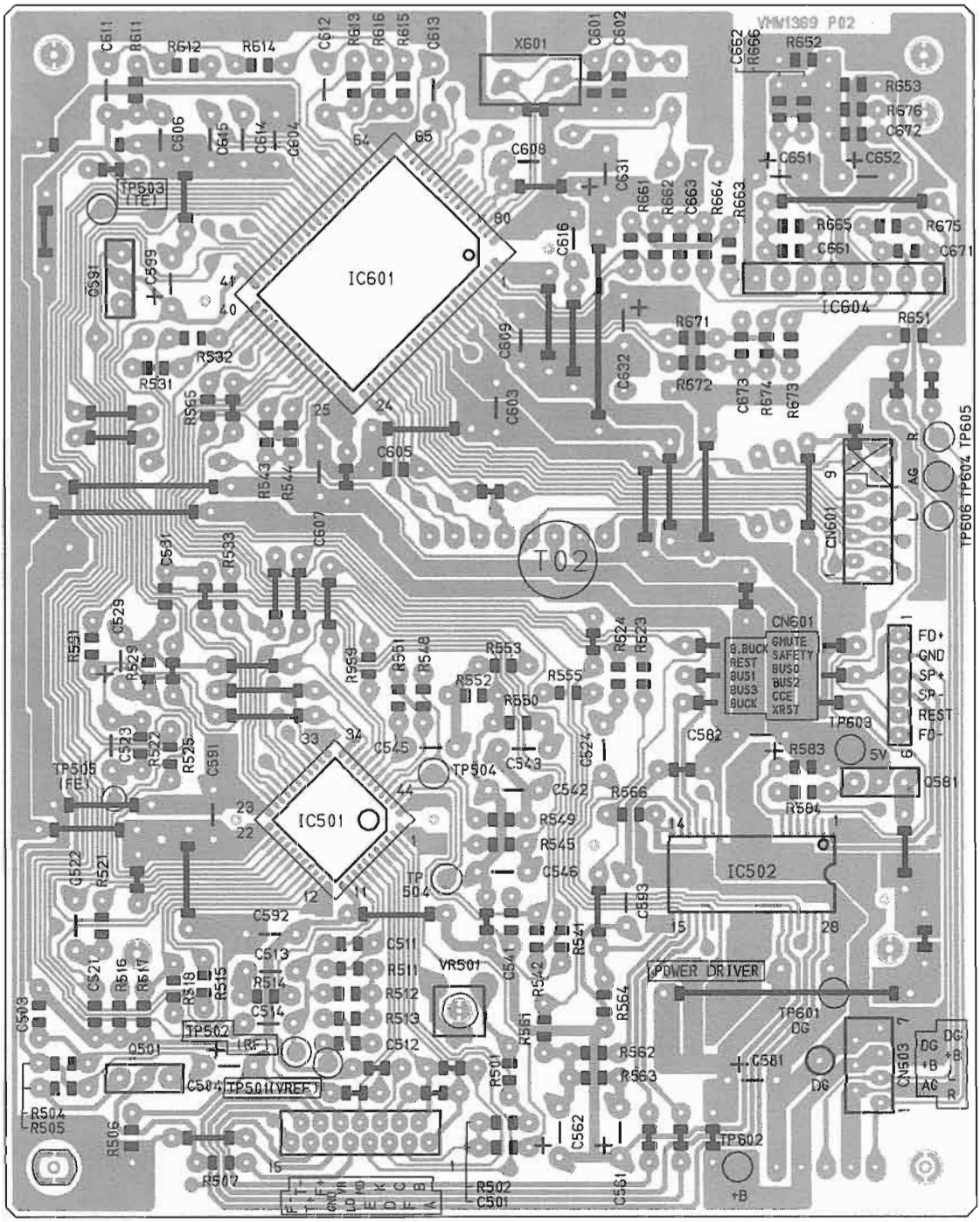

Fig. 12-1

Tuner & Power Amplifier P. C. Board (#1~#3,000): Block No. 01

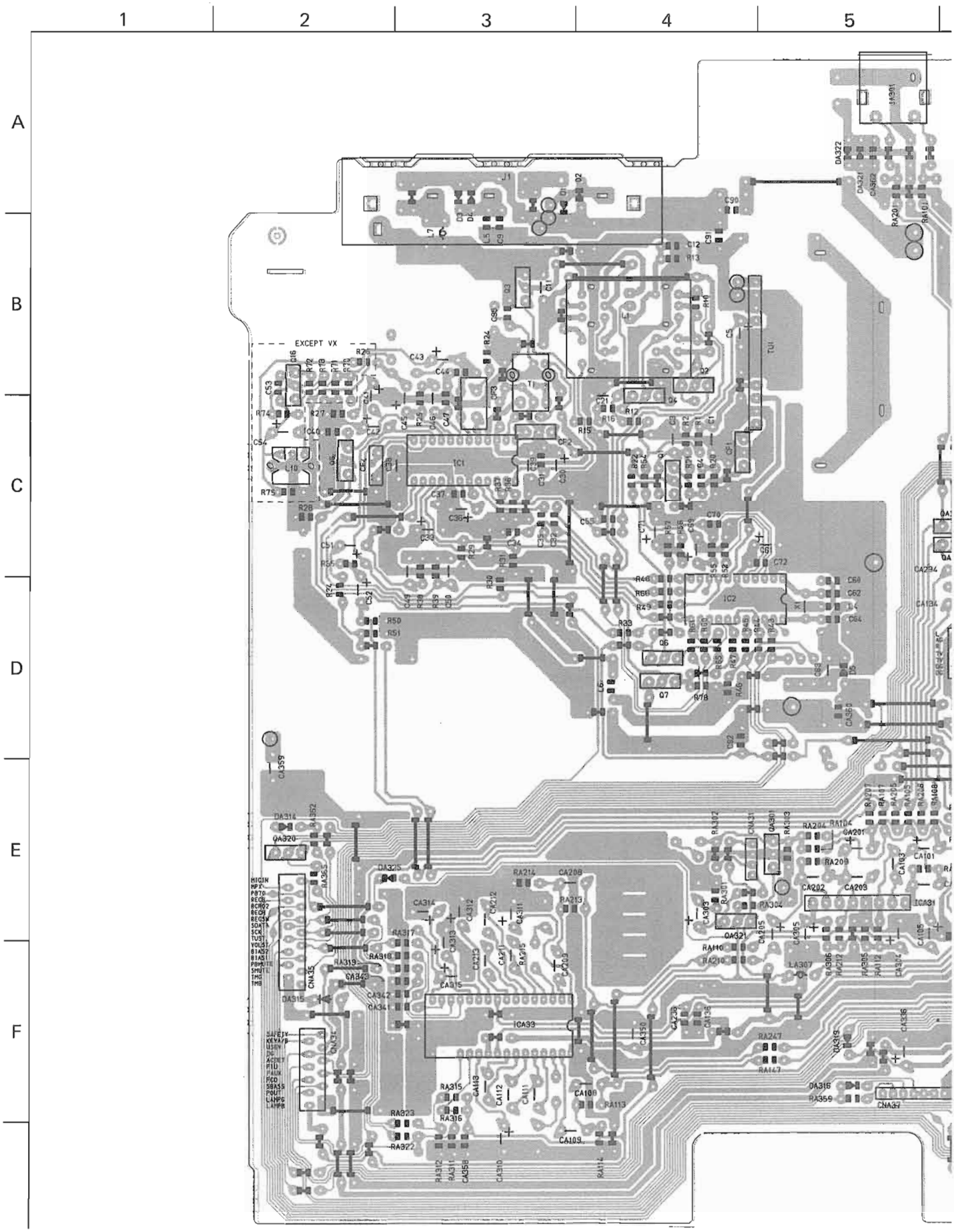

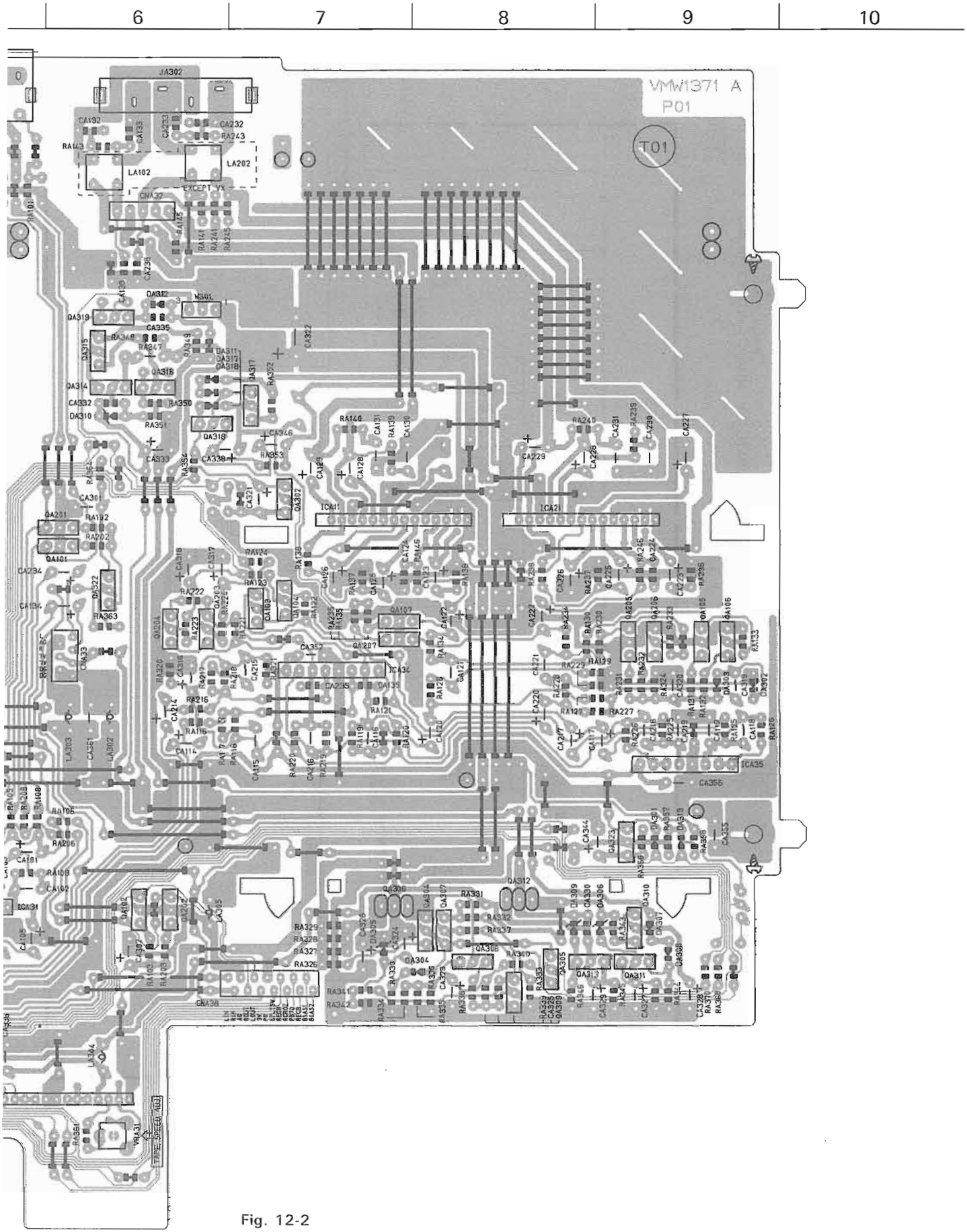
6
7
8
9
10
VMW1371 A
P01
T01
JA302
LA102
LA202
EXCEPT VX
CNA32
ICA11
ICA21
ICA31
ICA35
ICA41
ICA43
CNA38
VRA31
TAPE SPEED

Fig. 12-2

Tuner & Power Amplifier P. C. Board (#3,001~): Block No. 01

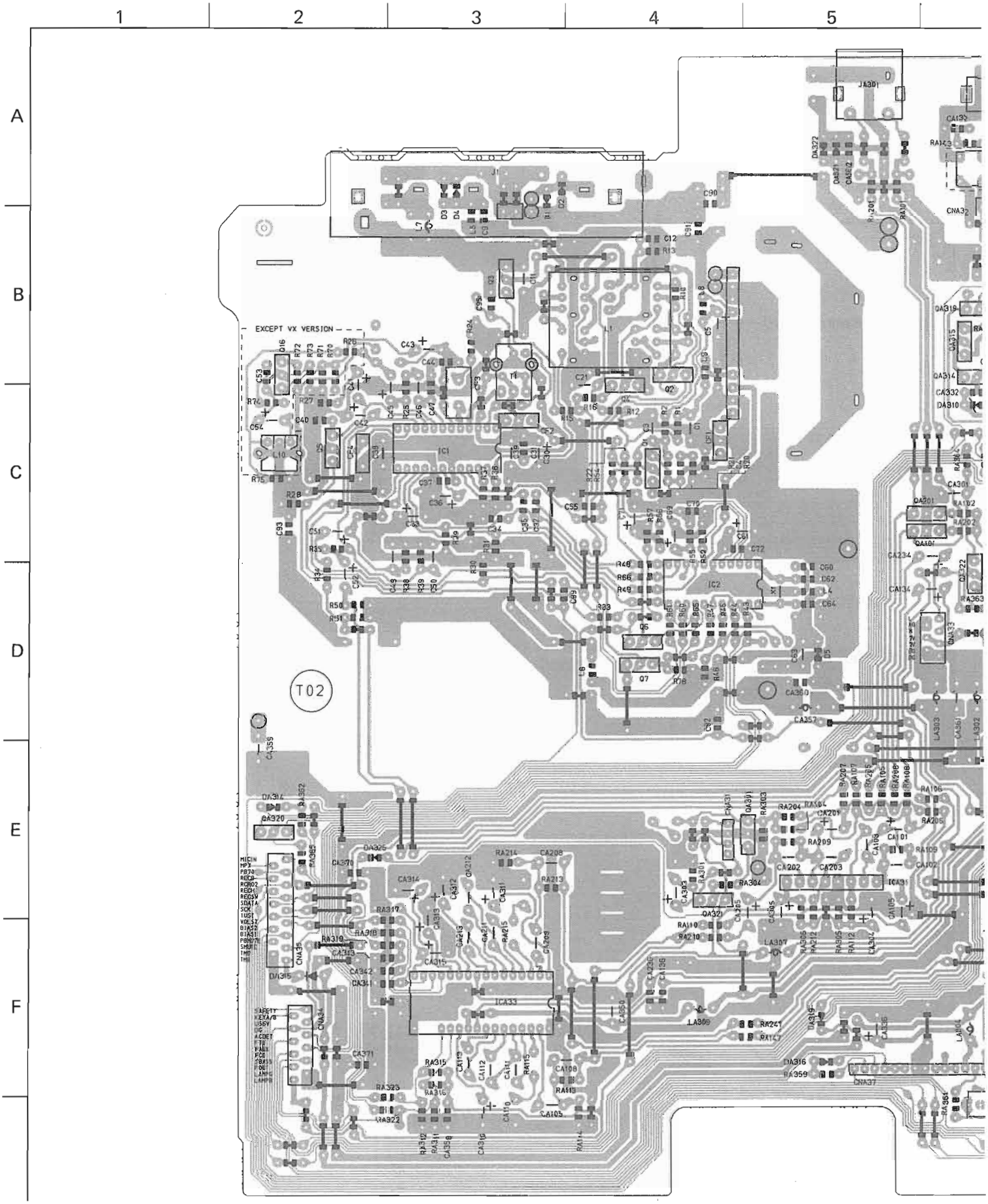

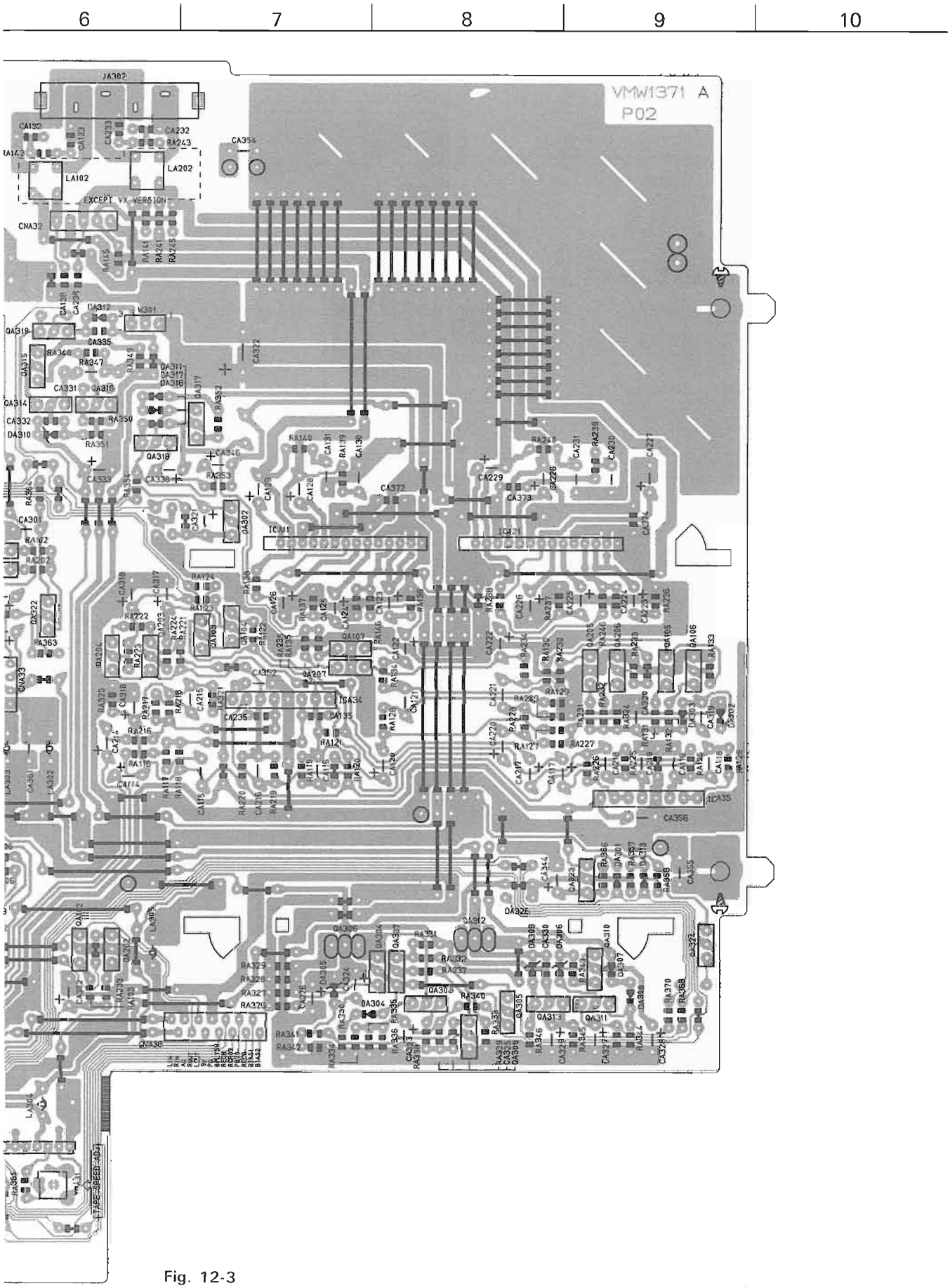
6
7
8
9
10
VMW1371 A
P02
EXCEPT VX VERSION
LA102
LA202
CNA32
CA354
IC411
IC421
IC435
TIMER SPEED ADJ

Fig. 12-3

Operation Switch & System Microcomputer P. C. Board: Block No. 03

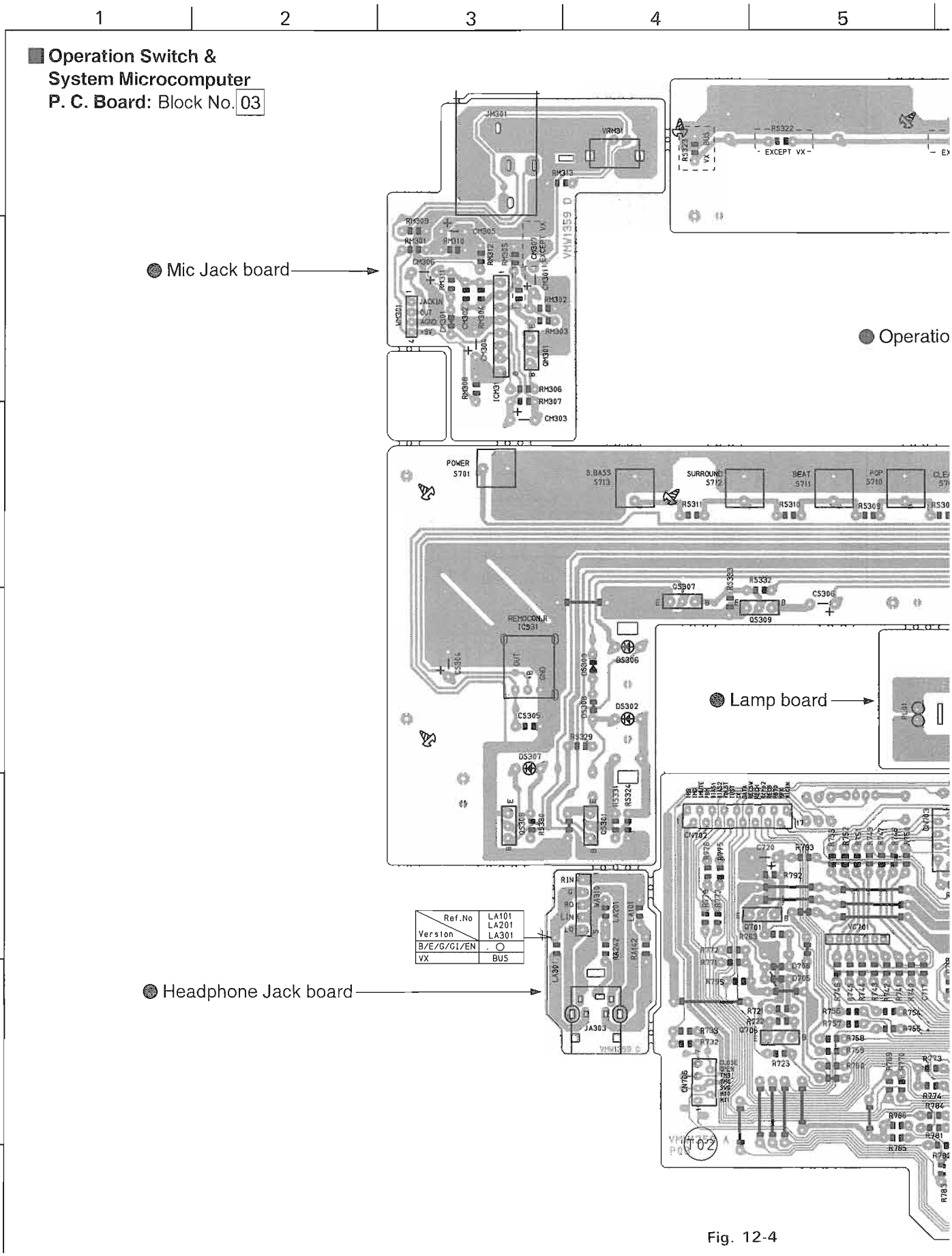

Fig. 12-4

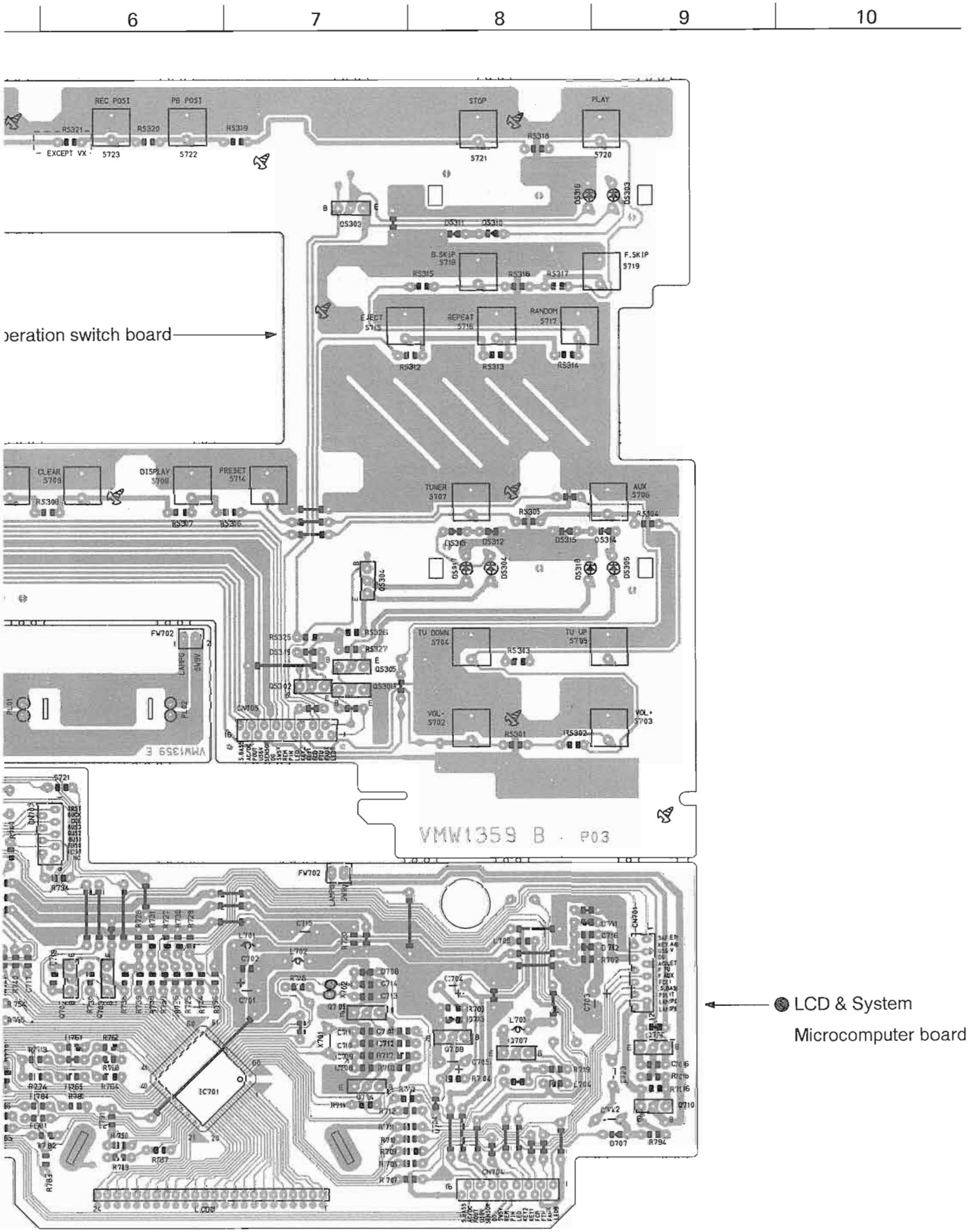
6
7
8
9
10
REC POST
PB POST
STOP
PLAY
EXCEPT VX
S723
S722
S721
S720
B.SKIP
S718
F.SKIP
S719
EJECT
S715
REPEAT
S716
RANDOM
S717
operation switch board
CLEAR
S708
DISPLAY
S709
PRESET
S714
TUNER
S707
AUX
S706
TU DOWN
S704
TU UP
S705
VOL.-
S702
VOL.+
S703
VMW1359 B
P03
IC701
LCD & System
Microcomputer board

Pre-Amplifier & Power Supply P. C. Board: Block No. 02

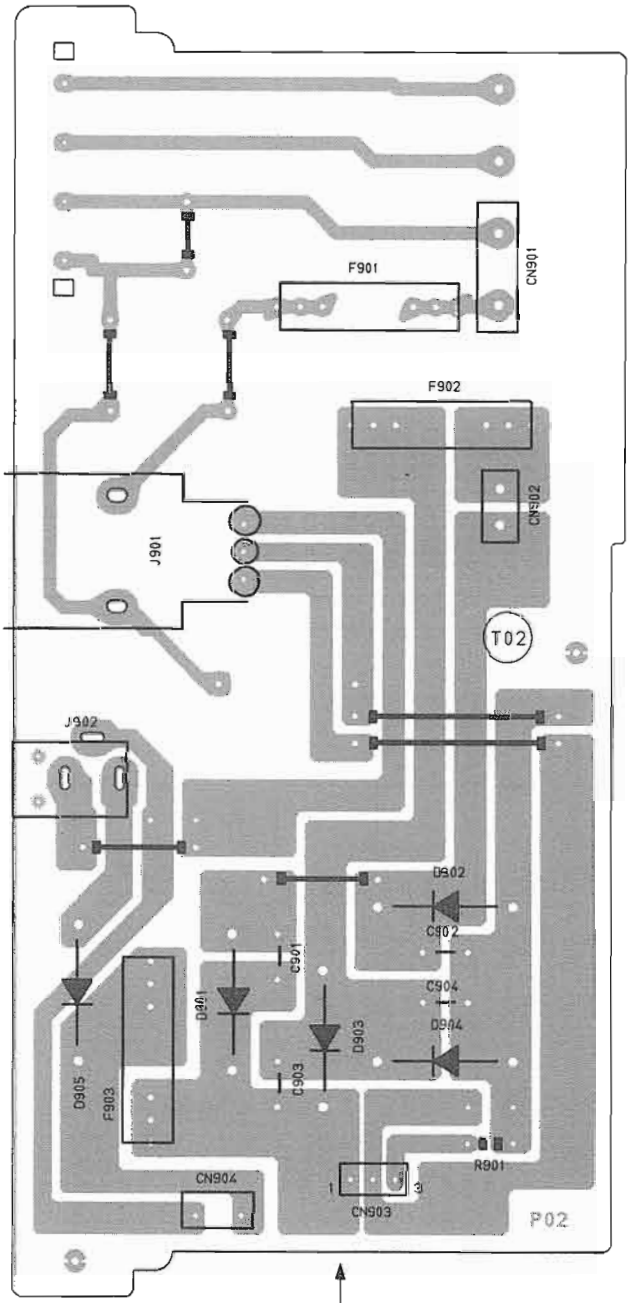

Power supply board

Pre amplifier board

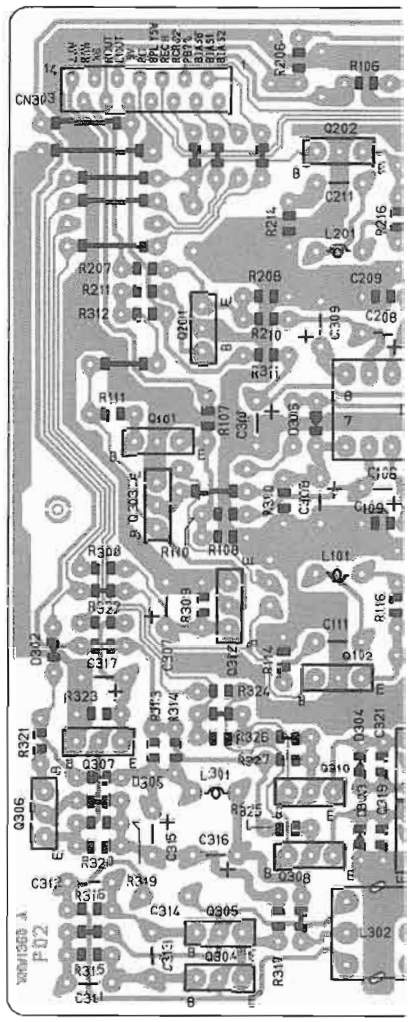

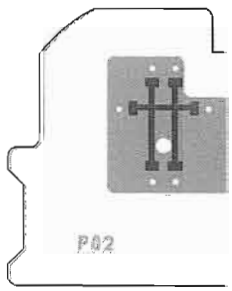

Battery contact board

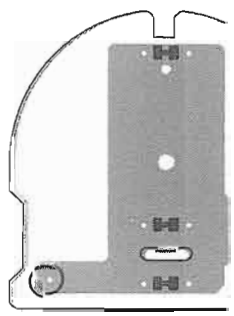

Fig. 12-5

6 | 7 | 8 | 9 | 10

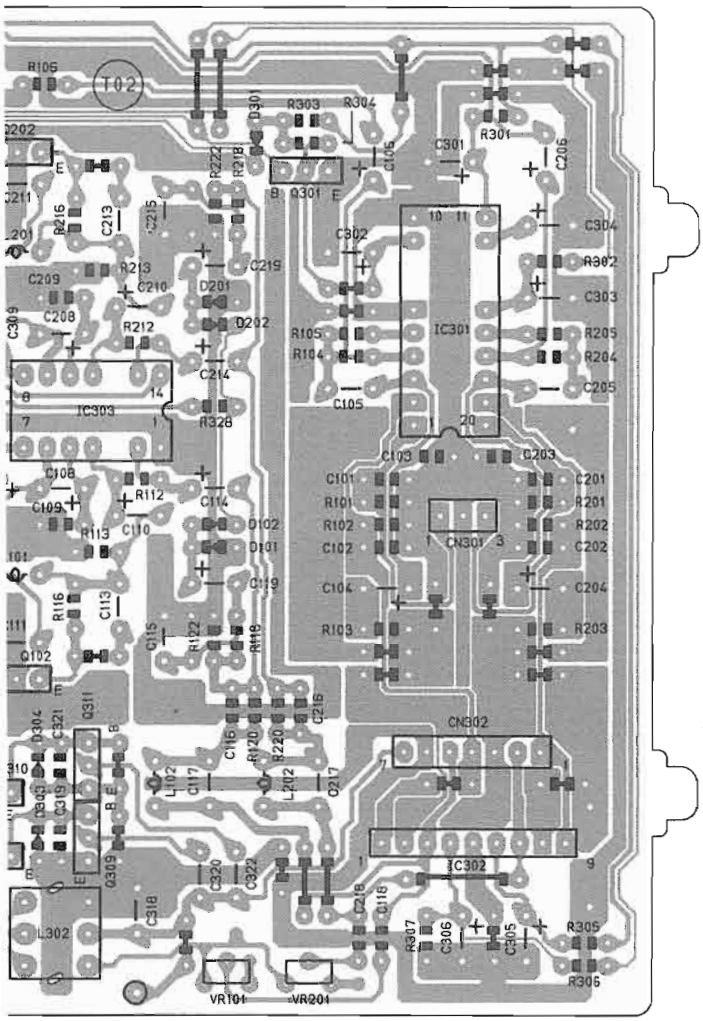

Fig. 12-6

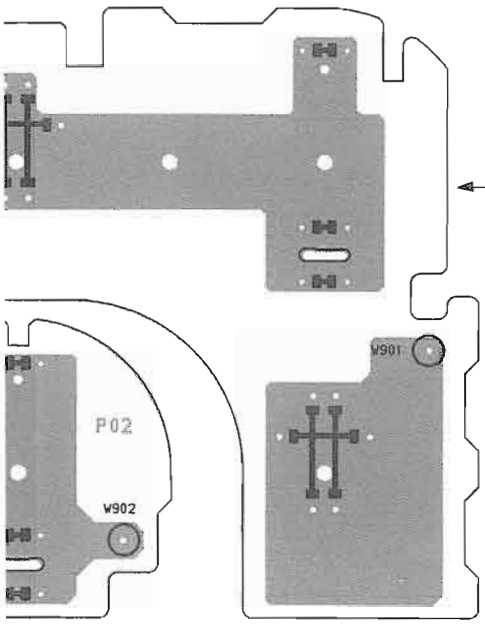

Battery contact board

Fig. 12-7

CD Tray Motor Drive P. C. Board:

Block No. 05

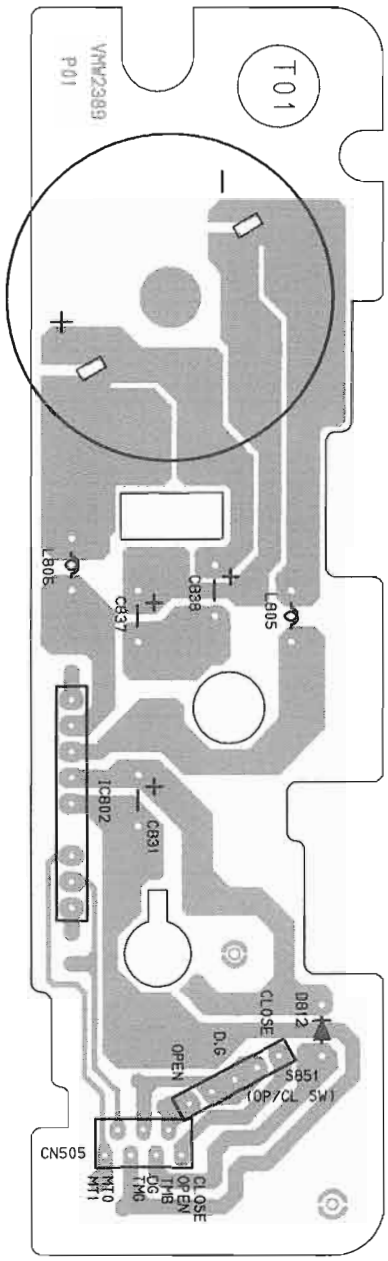

Fig. 12-8

Tuner & Power Amplifier P.C. Board (Except VX)

BLOCK NO. 01

⚠	REF.	PARTS NO.	PARTS NAME	REMARKS	SUFFIX
	C 1	QCC11EM-223V	C.CAPACITOR	.022MF 20% 25V	
	C 3	QCC11EM-473V	C.CAPACITOR	.047MF 20% 25V	
	C 4	QCVB1CN-103Y	C.CAPACITOR	.010MF 30% 16V	
	C 5	QEK41CM-106	E.CAPACITOR	10MF 20% 16V	
	C 9	QCSB1HJ-130Y	C.CAPACITOR	13PF 5% 50V	
	C 11	QCC11EM-473V	C.CAPACITOR	.047MF 20% 25V	
	C 12	QCS11HJ-150	C.CAPACITOR	15PF 5% 50V	
	C 13	QCBB1HK-151Y	C.CAPACITOR	150PF 10% 50V	
	C 21	QCC11EM-473V	C.CAPACITOR	.047MF 20% 25V	
	C 30	QEK41CM-106	E.CAPACITOR	10MF 20% 16V	
	C 31	QCS31HJ-390Z	C.CAPACITOR	39PF 5% 50V	
	C 32	QCVB1CN-103Y	C.CAPACITOR	.010MF 30% 16V	
	C 33	QEK61AM-107ZM	E.CAPACITOR	100MF 20% 10V	
	C 34	QCS11HJ-150	C.CAPACITOR	15PF 5% 50V	
	C 35	QCVB1CN-103Y	C.CAPACITOR	.010MF 30% 16V	
	C 36	QEK41CM-106	E.CAPACITOR	10MF 20% 16V	
	C 37	QCVB1CN-103Y	C.CAPACITOR	.010MF 30% 16V	
	C 38	QCC11EM-473V	C.CAPACITOR	.047MF 20% 25V	
	C 39	QCC11EM-473V	C.CAPACITOR	.047MF 20% 25V	
	C 40	QCVB1CN-103Y	C.CAPACITOR	.010MF 30% 16V	
	C 41	QEK41HM-104	E.CAPACITOR	.10MF 20% 50V	
	C 42	QEK41HM-474	E.CAPACITOR	.47MF 20% 50V	
	C 43	QEK61HM-335ZN	E.CAPACITOR	3.3MF 20% 50V	
	C 44	QCS11HJ-680	C.CAPACITOR	68PF 5% 50V	
	C 45	QEK41CM-106	E.CAPACITOR	10MF 20% 16V	
	C 46	QCC31EM-333ZV	C.CAPACITOR	.033MF 20% 25V	
	C 47	QCBB1HK-331Y	C.CAPACITOR	330PF 10% 50V	
	C 49	QCC11EM-273V	C.CAPACITOR	.027MF 10% 25V	
	C 50	QCC11EM-273V	C.CAPACITOR	.027MF 10% 25V	
	C 51	QEK41HM-105	E.CAPACITOR	1.0MF 20% 50V	
	C 52	QEK41HM-105	E.CAPACITOR	1.0MF 20% 50V	
	C 53	QCBB1HK-681Y	C.CAPACITOR	680PF 10% 50V	
	C 54	QEK61HM-335ZN	E.CAPACITOR	3.3MF 20% 50V	
	C 55	QCS11HJ-120	C.CAPACITOR	12PF 5% 50V	
	C 60	QCBB1HK-102Y	C.CAPACITOR	1000PF 10% 50V	
	C 61	QEK61AM-107ZM	E.CAPACITOR	100MF 20% 10V	
	C 62	QCS11HJ-270	C.CAPACITOR	27PF 5% 50V	
	C 63	QCC11EM-473V	C.CAPACITOR	.047MF 20% 25V	
	C 64	QCS11HJ-120	C.CAPACITOR	12PF 5% 50V	
	C 69	QEK41HM-105	E.CAPACITOR	1.0MF 20% 50V	
	C 70	QCXB1CM-222Y	C.CAPACITOR	2200PF 20% 16V	
	C 71	QEK61HM-335ZN	E.CAPACITOR	3.3MF 20% 50V	
	C 72	QCBB1HK-102Y	C.CAPACITOR	1000PF 10% 50V	
	C 90	QCVB1CN-103Y	C.CAPACITOR	.010MF 30% 16V	
	C 91	QCVB1CN-103Y	C.CAPACITOR	.010MF 30% 16V	
	C 92	QCBB1HK-101Y	C.CAPACITOR	100PF 10% 50V	
	C 99	QCBB1HK-102Y	C.CAPACITOR	1000PF 10% 50V	
	CA101	QETC1HM-335ZN	E.CAPACITOR	3.3MF 20% 50V	
	CA102	QCS11HJ-330	C.CAPACITOR	33PF 5% 50V	
	CA103	QCS11HJ-330	C.CAPACITOR	33PF 5% 50V	
	CA105	QETC1HM-335ZN	E.CAPACITOR	3.3MF 20% 50V	
	CA108	QFN81HJ-683	M.CAPACITOR	.068MF 5% 50V	
	CA109	QFN41HJ-333	M.CAPACITOR	.033MF 5% 50V	
	CA111	QFN41HJ-333	M.CAPACITOR	.033MF 5% 50V	
	CA112	QFN41HJ-333	M.CAPACITOR	.033MF 5% 50V	

BLOCK NO. 01

⚠	REF.	PARTS NO.	PARTS NAME	REMARKS	SUFFIX
	CA113	QCBB1HK-821Y	C.CAPACITOR	820PF 10% 50V	
	CA114	QET41CM-106	E.CAPACITOR	10MF 20% 16V	
	CA115	QFN81HJ-683	M.CAPACITOR	.068MF 5% 50V	
	CA116	QCS11HJ-680	C.CAPACITOR	68PF 5% 50V	
	CA117	QETC1HM-334ZN	E.CAPACITOR	.33MF 20% 50V	
	CA118	QFN81HJ-683	M.CAPACITOR	.068MF 5% 50V	
	CA119	QCS11HJ-151	C.CAPACITOR	150PF 5% 50V	
	CA120	QET41CM-226	E.CAPACITOR	22MF 20% 16V	
	CA121	QFN41HJ-154	M.CAPACITOR	.15MF 5% 50V	
	CA122	QET41HM-475	E.CAPACITOR	4.7MF 20% 50V	
	CA123	QET41AM-476	E.CAPACITOR	47MF 20% 10V	
	CA124	QCBB1HK-101Y	C.CAPACITOR	100PF 10% 50V	
	CA125	QET41AM-476	E.CAPACITOR	47MF 20% 10V	
	CA126	QEK61AM-227ZN	E CAPACITOR	220MF 20% 10V	
	CA128	QET41AM-227	E.CAPACITOR	220MF 20% 10V	
	CA129	QET41AM-227	E.CAPACITOR	220MF 20% 10V	
	CA130	QCC11EM-104V	C.CAPACITOR	.10MF 20% 25V	
	CA131	QCC11EM-104V	C.CAPACITOR	.10MF 20% 25V	
	CA132	QCVB1CN-103Y	C.CAPACITOR	.010MF 30% 16V	
	CA133	QCVB1CN-103Y	C.CAPACITOR	.010MF 30% 16V	
	CA134	QETC1HM-335ZN	E.CAPACITOR	3.3MF 20% 50V	
	CA135	QCBB1HK-101Y	C.CAPACITOR	100PF 10% 50V	
	CA136	QCBB1HK-331Y	C.CAPACITOR	330PF 10% 50V	
	CA138	QCBB1HK-151Y	C.CAPACITOR	150PF 10% 50V	
	CA201	QETC1HM-335ZN	E.CAPACITOR	3.3MF 20% 50V	
	CA202	QCS11HJ-330	C.CAPACITOR	33PF 5% 50V	
	CA203	QCS11HJ-330	C.CAPACITOR	33PF 5% 50V	
	CA205	QETC1HM-335ZN	E.CAPACITOR	3.3MF 20% 50V	
	CA208	QFN81HJ-683	M.CAPACITOR	.068MF 5% 50V	
	CA209	QFN41HJ-333	M.CAPACITOR	.033MF 5% 50V	
	CA211	QFN41HJ-333	M.CAPACITOR	.033MF 5% 50V	
	CA212	QFN41HJ-333	M.CAPACITOR	.033MF 5% 50V	
	CA213	QCBB1HK-821Y	C.CAPACITOR	820PF 10% 50V	
	CA214	QET41CM-106	E.CAPACITOR	10MF 20% 16V	
	CA215	QFN81HJ-683	M.CAPACITOR	.068MF 5% 50V	
	CA216	QCS11HJ-680	C.CAPACITOR	68PF 5% 50V	
	CA217	QETC1HM-334ZN	E.CAPACITOR	.33MF 20% 50V	
	CA218	QFN81HJ-683	M.CAPACITOR	.068MF 5% 50V	
	CA219	QCS11HJ-151	C.CAPACITOR	150PF 5% 50V	
	CA220	QET41CM-226	E.CAPACITOR	22MF 20% 16V	
	CA221	QFN41HJ-154	M.CAPACITOR	.15MF 5% 50V	
	CA222	QET41HM-475	E.CAPACITOR	4.7MF 20% 50V	
	CA223	QET41AM-476	E.CAPACITOR	47MF 20% 10V	
	CA224	QCBB1HK-101Y	C.CAPACITOR	100PF 10% 50V	
	CA225	QET41AM-476	E.CAPACITOR	47MF 20% 10V	
	CA226	QEK61AM-227ZN	E CAPACITOR	220MF 20% 10V	
	CA227	QET41EM-477	E.CAPACITOR	470MF 20% 25V	
	CA228	QET41AM-227	E.CAPACITOR	220MF 20% 10V	
	CA229	QET41AM-227	E.CAPACITOR	220MF 20% 10V	
	CA230	QCC11EM-104V	C.CAPACITOR	.10MF 20% 25V	
	CA231	QCC11EM-104V	C.CAPACITOR	.10MF 20% 25V	
	CA232	QCVB1CN-103Y	C.CAPACITOR	.010MF 30% 16V	
	CA233	QCVB1CN-103Y	C.CAPACITOR	.010MF 30% 16V	
	CA234	QETC1HM-335ZN	E.CAPACITOR	3.3MF 20% 50V	
	CA235	QCBB1HK-101Y	C.CAPACITOR	100PF 10% 50V	

BLOCK NO. 01

⚠	REF.	PARTS NO.	PARTS NAME	REMARKS	SUFFIX
	CA236	QCBB1HK-331Y	C.CAPACITOR	330PF 10% 50V	
	CA238	QCBB1HK-151Y	C.CAPACITOR	150PF 10% 50V	
	CA301	QCC31EM-333ZV	C.CAPACITOR	.033MF 20% 25V	
	CA302	QET41HM-475	E.CAPACITOR	4.7MF 20% 50V	
	CA303	QETC1HM-225ZN	E.CAPACITOR	2.2MF 20% 50V	
	CA304	QET41CM-226	E.CAPACITOR	22MF 20% 16V	
	CA305	QET41CM-226	E.CAPACITOR	22MF 20% 16V	
	CA310	QETC1HM-224ZN	E.CAPACITOR	.22MF 20% 50V	
	CA311	QETC1HM-106ZN	E.CAPACITOR	10MF 20% 50V	
	CA312	QET41HM-475	E.CAPACITOR	4.7MF 20% 50V	
	CA313	QET41HM-475	E.CAPACITOR	4.7MF 20% 50V	
	CA314	QET41CM-226	E.CAPACITOR	22MF 20% 16V	
	CA315	QET41AM-107	E.CAPACITOR	100MF 20% 10V	
	CA316	QET41CM-226	E.CAPACITOR	22MF 20% 16V	
	CA317	QET41HM-105	E.CAPACITOR	1.0MF 20% 50V	
	CA318	QET41HM-105	E.CAPACITOR	1.0MF 20% 50V	
	CA319	QFN81HJ-393	M.CAPACITOR	.039MF 5% 50V	
	CA320	QFN81HJ-393	M.CAPACITOR	.039MF 5% 50V	
	CA321	QET41CM-106	E.CAPACITOR	10MF 20% 16V	
	CA322	QETB1EM-688N	E.CAPACITOR	6800MF 20% 25V	
	CA323	QET41CM-106	E.CAPACITOR	10MF 20% 16V	
	CA324	QETC1HM-225ZN	E.CAPACITOR	2.2MF 20% 50V	
	CA325	QCBB1HK-221Y	C.CAPACITOR	220PF 10% 50V	
	CA326	QET41CM-226	E.CAPACITOR	22MF 20% 16V	
	CA327	QET41HM-475	E.CAPACITOR	4.7MF 20% 50V	
	CA328	QET41CM-226	E.CAPACITOR	22MF 20% 16V	
	CA329	QET41CM-106	E.CAPACITOR	10MF 20% 16V	
	CA330	QCVB1CN-103Y	C.CAPACITOR	.010MF 30% 16V	
	CA332	QCVB1CN-103Y	C.CAPACITOR	.010MF 30% 16V	
	CA333	QET41AM-107	E.CAPACITOR	100MF 20% 10V	
	CA335	QCVB1CN-103Y	C.CAPACITOR	.010MF 30% 16V	
	CA336	QET41AM-227	E.CAPACITOR	220MF 20% 10V	
	CA338	QET41EM-107	E.CAPACITOR	100MF 20% 25V	
	CA341	QCBB1HK-151Y	C.CAPACITOR	150PF 10% 50V	
	CA342	QCBB1HK-151Y	C.CAPACITOR	150PF 10% 50V	
	CA343	QCBB1HK-151Y	C.CAPACITOR	150PF 10% 50V	
	CA344	QET41AM-107	E.CAPACITOR	100MF 20% 10V	
	CA346	QET41HM-475	E.CAPACITOR	4.7MF 20% 50V	
	CA350	QCC11EM-223V	C.CAPACITOR	.022MF 20% 25V	
	CA352	QCC11EM-223V	C.CAPACITOR	.022MF 20% 25V	
	CA354	QCC11EK-103ZV	C.CAPACITOR	.010MF 10% 25V	
	CA355	QCC11EM-104V	C.CAPACITOR	.10MF 20% 25V	
	CA356	QCC11EM-223V	C.CAPACITOR	.022MF 20% 25V	
	CA358	QCBB1HK-151Y	C.CAPACITOR	150PF 10% 50V	
	CA359	QCC11EM-103V	C.CAPACITOR	.010MF 20% 25V	
	CA360	QCVB1CN-103Y	C.CAPACITOR	.010MF 30% 16V	
	CA361	QCC11EM-223V	C.CAPACITOR	.022MF 20% 25V	
	CA362	QCBB1HK-102Y	C.CAPACITOR	1000PF 10% 50V	
	CA370	QCVB1CN-103Y	C.CAPACITOR	.010MF 30% 16V	
	CA371	QCBB1HK-102Y	C.CAPACITOR	1000PF 10% 50V	
	CA372	QCBB1HK-102Y	C.CAPACITOR	1000PF 10% 50V	
	CA373	QCBB1HK-102Y	C.CAPACITOR	1000PF 10% 50V	
	CA374	QCBB1HK-102Y	C.CAPACITOR	1000PF 10% 50V	
	CF 1	VCF2M3B-104	CERAMIC FILTER	FM IF	
	CF 2	VCF2S3B-102	C FILTER	FM IF	

BLOCK NO. 01

⚠	REF.	PARTS NO.	PARTS NAME	REMARKS	SUFFIX
	CF 3	VCF1Z2Z-115Z	CERAMIC FILTER		
	CF 4	CMU2-456A05	CERA LOCK		
	CNA31	VMC0075-004N	CONNECTOR	TO MIC AMP	
	CNA32	VMC0040-005	CONECTOR	TO HEAD PHONE	
	CNA33	EMV7155-007	CONNECTOR	TO CD AMP	
	CNA34	EMV7155-012R	CONNECTOR	TO MICOM	
	CNA35	EMV7155-017	CONNECTOR	TO MICOM	
	CNA37	VMC0075-015N	CONNECTOR	TO C MECHA	
	CNA38	EMV7155-014	CONNECTOR	TO PRE AMP	
	D 1	1SS133	SI DIODE		
	D 2	1SS133	SI DIODE		
	D 3	1SS133	SI DIODE		
	D 4	1SS133	SI DIODE		
	D 5	1SS133	SI DIODE		
	DA301	1SS133	SI DIODE		
	DA302	RB721Q	DIODE		
	DA303	RB721Q	DIODE		
	DA304	1SS133	SI DIODE		
	DA305	MTZ9.1JA	ZENER DIODE		
	DA306	MTZ4.3JB	ZENER DIODE		
	DA307	1SS133	SI DIODE		
	DA308	1SS133	SI DIODE		
	DA309	MTZ3.9JB	ZENER DIODE		
	DA310	RD5.6JSAB1	ZENER DIODE		
	DA311	1SS133	SI DIODE		
	DA312	1SS133	SI DIODE		
	DA313	1SS133	SI DIODE		
	DA314	1SS133	SI DIODE		
	DA315	1SR35-100	SI DIODE		
	DA316	1SS133	SI DIODE		
	DA317	1SS133	SI DIODE		
	DA318	1SS133	SI DIODE		
	DA319	1SS133	SI DIODE		
	DA321	1SS133	SI DIODE		
	DA322	1SS133	SI DIODE		
	DA325	1SS133	SI DIODE		
	IC 1	TA2057N	IC		
	IC 2	LC72131	IC		
	ICA11	TA8229K	IC	POWER AMP	
	ICA21	TA8229K	IC	POWER AMP	
	ICA31	VC4580L	IC	ADDER	
	ICA33	BH3854S	IC	E VOL	
	ICA34	XRA15218N	IC	B.BOOST	
	ICA35	VC4580L	IC	S.INDUCTOR	
	J 1	EMB41YV-302K	ANT TERMINAL	AM/FM ANT	
	JA301	VMJ3021-001	PIN JACK		
	JA302	EMB90TV-404A	SPK TERMINAL	SPK OUT	
	L 1	VQZ0098-101	COIL BLOCK	MW/LW RF/QSC	
	L 4	VQP0018-221	INDUCTOR		
	L 5	VQP0018-2R7	INDUCTOR		
	L 6	VQP0018-101	INDUCTOR		
	L 7	VQZ0048-009	INDUCTOR		
	L 8	VQP0018-101	INDUCTOR		
	L 9	VQP0018-101	INDUCTOR		
	L 10	VQZ0069-002S	TRAP COIL	114KHZ TRAP	

BLOCK NO. 01

⚠	REF.	PARTS NO.	PARTS NAME	REMARKS	SUFFIX
	L 001	VCF2M3B-104	CERAMIC FILTER	FM IF	
	L 002	VCF2S3B-102	C FILTER	FM IF	
	LA102	VQZ0104-003	INDUCTOR		
	LA202	VQZ0104-003	INDUCTOR		
	LA302	VQZ0048-009	INDUCTOR		
	LA303	VQZ0048-009	INDUCTOR		
	LA304	VQP0028-100Z	INDUCTOR		
	LA305	VQZ0048-009	INDUCTOR		
	LA307	VQZ0048-009	INDUCTOR		
	LA308	VQZ0048-009	INDUCTOR		
	LA309	VQZ0048-009	INDUCTOR		
	Q 1	2SC2668(O)	TRANSISTOR		
	Q 2	2SA1175	TRANSISTOR		
	Q 3	2SC2785	TRANSISTOR		
	Q 4	2SC2785	TRANSISTOR		
	Q 5	2SA1175	TRANSISTOR		
	Q 6	DTA114YS	TRANSISTOR		
	Q 7	2SC2785	TRANSISTOR		
	Q 16	2SC2785	TRANSISTOR		
	QA101	2SD2144S(VW)	TRANSISTOR		
	QA102	2SD2144S(VW)	TRANSISTOR		
	QA103	2SK105(E,F,H)	TRANSISTOR(FET)		
	QA104	2SK105(E,F,H)	TRANSISTOR(FET)		
	QA105	2SC2001(L,K)	TRANSISTOR		
	QA106	2SC2001(L,K)	TRANSISTOR		
	QA107	2SD2144S(VW)	TRANSISTOR		
	QA201	2SD2144S(VW)	TRANSISTOR		
	QA202	2SD2144S(VW)	TRANSISTOR		
	QA203	2SK105(E,F,H)	TRANSISTOR(FET)		
	QA204	2SK105(E,F,H)	TRANSISTOR(FET)		
	QA205	2SC2001(L,K)	TRANSISTOR		
	QA206	2SC2001(L,K)	TRANSISTOR		
	QA207	2SD2144S(VW)	TRANSISTOR		
	QA301	2SC2785	TRANSISTOR		
	QA302	DTA143ES	TRANSISTOR		
	QA304	2SA1175	TRANSISTOR		
	QA305	DTC144TS	TRANSISTOR		
	QA306	2SB1274(R,S)	TRANSISTOR		
	QA307	BN1L4Z-T	TRANSISTOR		
	QA308	2SC2785	TRANSISTOR		
	QA309	2SC2785	TRANSISTOR		
	QA310	2SA1175	TRANSISTOR		
	QA311	2SC2785	TRANSISTOR		
	QA312	2SB772(Q,P)	TRANSISTOR		
	QA313	2SC2785	TRANSISTOR		
	QA314	2SA952(L,K)	TRANSISTOR		
	QA315	2SC2785	TRANSISTOR		
	QA316	2SC2785	TRANSISTOR		
	QA317	2SA1175	TRANSISTOR		
	QA318	2SC2785	TRANSISTOR		
	QA319	DTA144ES	TRANSISTOR		
	QA320	DTC144TS	TRANSISTOR		
	QA321	DTA115EK	TRANSISTOR		
	QA322	2SC2785	TRANSISTOR		
	QA323	2SC2785	TRANSISTOR		

BLOCK NO. 01

⚠	REF.	PARTS NO.	PARTS NAME	REMARKS	SUFFIX
	R 1	QRD161J-102	CARBON RESISTOR	1.0K 5% 1/6W	
	R 2	QRD161J-560	CARBON RESISTOR	56 5% 1/6W	
	R 10	QRD161J-102	CARBON RESISTOR	1.0K 5% 1/6W	
	R 12	QRD161J-103	CARBON RESISTOR	10K 5% 1/6W	
	R 13	QRD161J-104	CARBON RESISTOR	100K 5% 1/6W	
	R 15	QRD161J-103	CARBON RESISTOR	10K 5% 1/6W	
	R 16	QRD161J-103	CARBON RESISTOR	10K 5% 1/6W	
	R 20	QRD161J-331	CARBON RESISTOE	330 5% 1/6W	
	R 21	QRD161J-224	CARBON RESISTOR	220K 5% 1/6W	
	R 22	QRD161J-331	CARBON RESISTOE	330 5% 1/6W	
	R 24	QRD161J-271	CARBON RESISTOR	270 5% 1/6W	
	R 25	QRD161J-273	CARBON RESISTOR	27K 5% 1/6W	
	R 26	QRD161J-183	CARBON RESISTOR	18K 5% 1/6W	
	R 27	QRD161J-223	CARBON RESISTOR	22K 5% 1/6W	
	R 28	QRD161J-103	CARBON RESISTOR	10K 5% 1/6W	
	R 29	QRD161J-473	CARBON RESISTOR	47K 5% 1/6W	
	R 30	QRD161J-103	CARBON RESISTOR	10K 5% 1/6W	
	R 31	QRD161J-103	CARBON RESISTOR	10K 5% 1/6W	
	R 33	QRD161J-103	CARBON RESISTOR	10K 5% 1/6W	
	R 34	QRD161J-103	CARBON RESISTOR	10K 5% 1/6W	
	R 35	QRD161J-103	CARBON RESISTOR	10K 5% 1/6W	
	R 36	QRD161J-103	CARBON RESISTOR	10K 5% 1/6W	
	R 37	QRD167J-562	CARBON RESISTOR	5.6K 5% 1/6W	
	R 38	QRD161J-392	CARBON RESISTOR	3.9K 5% 1/6W	
	R 39	QRD161J-392	CARBON RESISTOR	3.9K 5% 1/6W	
	R 43	QRD161J-102	CARBON RESISTOR	1.0K 5% 1/6W	
	R 44	QRD161J-102	CARBON RESISTOR	1.0K 5% 1/6W	
	R 45	QRD161J-102	CARBON RESISTOR	1.0K 5% 1/6W	
	R 46	QRD161J-473	CARBON RESISTOR	47K 5% 1/6W	
	R 47	QRD161J-102	CARBON RESISTOR	1.0K 5% 1/6W	
	R 48	QRD161J-331	CARBON RESISTOE	330 5% 1/6W	
	R 49	QRD161J-102	CARBON RESISTOR	1.0K 5% 1/6W	
	R 50	QRD161J-473	CARBON RESISTOR	47K 5% 1/6W	
	R 51	QRD161J-473	CARBON RESISTOR	47K 5% 1/6W	
	R 52	QRD161J-472	CARBON RESISTOR	4.7K 5% 1/6W	
	R 54	QRD161J-222	CARBON RESISTOR	2.2K 5% 1/6W	
	R 55	QRD161J-472	CARBON RESISTOR	4.7K 5% 1/6W	
	R 56	QRD167J-332	CARBON RESISTOR	3.3K 5% 1/6W	
	R 57	QRD161J-102	CARBON RESISTOR	1.0K 5% 1/6W	
	R 60	QRD161J-102	CARBON RESISTOR	1.0K 5% 1/6W	
	R 61	QRD161J-102	CARBON RESISTOR	1.0K 5% 1/6W	
	R 65	QRD161J-222	CARBON RESISTOR	2.2K 5% 1/6W	
	R 66	QRD161J-222	CARBON RESISTOR	2.2K 5% 1/6W	
	R 70	QRD161J-393	CARBON RESISTOR	39K 5% 1/6W	
	R 71	QRD161J-823	CARBON RESISTOR	82K 5% 1/6W	
	R 72	QRD161J-122	CARBON RESISTOR	1.2K 5% 1/6W	
	R 73	QRD161J-222	CARBON RESISTOR	2.2K 5% 1/6W	
	R 74	QRD167J-332	CARBON RESISTOR	3.3K 5% 1/6W	
	R 75	QRD161J-822	CARBON RESISTOR	8.2K 5% 1/6W	
	R 78	QRD161J-473	CARBON RESISTOR	47K 5% 1/6W	
	RA101	QRD161J-683	CARBON RESISTOR	68K 5% 1/6W	
	RA102	QRD161J-102	CARBON RESISTOR	1.0K 5% 1/6W	
	RA103	QRD161J-472	CARBON RESISTOR	4.7K 5% 1/6W	
	RA104	QRD161J-683	CARBON RESISTOR	68K 5% 1/6W	
	RA105	QRD167J-562	CARBON RESISTOR	5.6K 5% 1/6W	

BLOCK NO. 01

REF.	PARTS NO.	PARTS NAME	REMARKS	SUFFIX
RA106	QRD161J-472	CARBON RESISTOR	4.7K 5% 1/6W	
RA107	QRD161J-103	CARBON RESISTOR	10K 5% 1/6W	
RA108	QRD161J-333	CARBON RESISTOR	33K 5% 1/6W	
RA109	QRD161J-563	CARBON RESISTOR	56K 5% 1/6W	
RA110	QRD161J-101	CARBON RESISTOR	100 5% 1/6W	
RA112	QRD161J-102	CARBON RESISTOR	1.0K 5% 1/6W	
RA113	QRD161J-123	CARBON RESISTOR	12K 5% 1/6W	
RA114	QRD167J-562	CARBON RESISTOR	5.6K 5% 1/6W	
RA116	QRD161J-822	CARBON RESISTOR	8.2K 5% 1/6W	
RA117	QRD167J-332	CARBON RESISTOR	3.3K 5% 1/6W	
RA118	QRD161J-334	CARBON RESISTOR	330K 5% 1/6W	
RA119	QRD161J-393	CARBON RESISTOR	39K 5% 1/6W	
RA120	QRD161J-103	CARBON RESISTOR	10K 5% 1/6W	
RA121	QRD161J-104	CARBON RESISTOR	100K 5% 1/6W	
RA122	QRD167J-332	CARBON RESISTOR	3.3K 5% 1/6W	
RA123	QRD161J-105	CARBON RESISTOR	1.0M 5% 1/6W	
RA124	QRD161J-105	CARBON RESISTOR	1.0M 5% 1/6W	
RA125	QRD161J-274	CARBON RESISTOR	270K 5% 1/6W	
RA126	QRD161J-821	CARBON RESISTOR	820 5% 1/6W	
RA127	QRD161J-472	CARBON RESISTOR	4.7K 5% 1/6W	
RA128	QRD161J-152	CARBON RESISTOR	1.5K 5% 1/6W	
RA129	QRD161J-181	CARBON RESISTOR	180 5% 1/6W	
RA130	QRD161J-222	CARBON RESISTOR	2.2K 5% 1/6W	
RA131	QRD161J-475	CARBON RESISTOR	4.7M 5% 1/6W	
RA132	QRD161J-475	CARBON RESISTOR	4.7M 5% 1/6W	
RA133	QRD161J-474	CARBON RESISTOR	470K 5% 1/6W	
RA134	QRD161J-222	CARBON RESISTOR	2.2K 5% 1/6W	
RA135	QRD161J-472	CARBON RESISTOR	4.7K 5% 1/6W	
RA136	QRD161J-331	CARBON RESISTOE	330 5% 1/6W	
RA137	QRD161J-331	CARBON RESISTOE	330 5% 1/6W	
RA138	QRD161J-273	CARBON RESISTOR	27K 5% 1/6W	
RA139	QRD161J-2R2	CARBON RESISTOR	2.2 5% 1/6W	
RA140	QRD161J-2R2	CARBON RESISTOR	2.2 5% 1/6W	
RA141	QRD161J-820	CARBON RESISTOR	82 5% 1/6W	
RA143	QRD167J-4R7	CARBON RESISTOR	4.7 5% 1/6W	
RA145	QRD161J-820	CARBON RESISTOR	82 5% 1/6W	
RA146	QRD161J-331	CARBON RESISTOE	330 5% 1/6W	
RA147	QRD161J-331	CARBON RESISTOE	330 5% 1/6W	
RA201	QRD161J-683	CARBON RESISTOR	68K 5% 1/6W	
RA202	QRD161J-102	CARBON RESISTOR	1.0K 5% 1/6W	
RA203	QRD161J-472	CARBON RESISTOR	4.7K 5% 1/6W	
RA204	QRD161J-683	CARBON RESISTOR	68K 5% 1/6W	
RA205	QRD167J-562	CARBON RESISTOR	5.6K 5% 1/6W	
RA206	QRD161J-472	CARBON RESISTOR	4.7K 5% 1/6W	
RA207	QRD161J-103	CARBON RESISTOR	10K 5% 1/6W	
RA208	QRD161J-333	CARBON RESISTOR	33K 5% 1/6W	
RA209	QRD161J-563	CARBON RESISTOR	56K 5% 1/6W	
RA210	QRD161J-101	CARBON RESISTOR	100 5% 1/6W	
RA212	QRD161J-102	CARBON RESISTOR	1.0K 5% 1/6W	
RA213	QRD161J-123	CARBON RESISTOR	12K 5% 1/6W	
RA214	QRD167J-562	CARBON RESISTOR	5.6K 5% 1/6W	
RA216	QRD161J-822	CARBON RESISTOR	8.2K 5% 1/6W	
RA217	QRD167J-332	CARBON RESISTOR	3.3K 5% 1/6W	
RA218	QRD161J-334	CARBON RESISTOR	330K 5% 1/6W	
RA219	QRD161J-393	CARBON RESISTOR	39K 5% 1/6W	

BLOCK NO. 01

REF.	PARTS NO.	PARTS NAME	REMARKS	SUFFIX
RA220	QRD161J-103	CARBON RESISTOR	10K 5% 1/6W	
RA221	QRD161J-104	CARBON RESISTOR	100K 5% 1/6W	
RA222	QRD167J-332	CARBON RESISTOR	3.3K 5% 1/6W	
RA223	QRD161J-105	CARBON RESISTOR	1.0M 5% 1/6W	
RA224	QRD161J-105	CARBON RESISTOR	1.0M 5% 1/6W	
RA225	QRD161J-274	CARBON RESISTOR	270K 5% 1/6W	
RA226	QRD161J-821	CARBON RESISTOR	820 5% 1/6W	
RA227	QRD161J-472	CARBON RESISTOR	4.7K 5% 1/6W	
RA228	QRD161J-152	CARBON RESISTOR	1.5K 5% 1/6W	
RA229	QRD161J-181	CARBON RESISTOR	180 5% 1/6W	
RA230	QRD161J-222	CARBON RESISTOR	2.2K 5% 1/6W	
RA231	QRD161J-475	CARBON RESISTOR	4.7M 5% 1/6W	
RA232	QRD161J-475	CARBON RESISTOR	4.7M 5% 1/6W	
RA233	QRD161J-474	CARBON RESISTOR	470K 5% 1/6W	
RA234	QRD161J-222	CARBON RESISTOR	2.2K 5% 1/6W	
RA235	QRD161J-472	CARBON RESISTOR	4.7K 5% 1/6W	
RA236	QRD161J-331	CARBON RESISTOE	330 5% 1/6W	
RA237	QRD161J-331	CARBON RESISTOE	330 5% 1/6W	
RA238	QRD161J-273	CARBON RESISTOR	27K 5% 1/6W	
RA239	QRD161J-2R2	CARBON RESISTOR	2.2 5% 1/6W	
RA240	QRD161J-2R2	CARBON RESISTOR	2.2 5% 1/6W	
RA241	QRD161J-820	CARBON RESISTOR	82 5% 1/6W	
RA243	QRD167J-4R7	CARBON RESISTOR	4.7 5% 1/6W	
RA245	QRD161J-820	CARBON RESISTOR	82 5% 1/6W	
RA246	QRD161J-331	CARBON RESISTOE	330 5% 1/6W	
RA247	QRD161J-331	CARBON RESISTOE	330 5% 1/6W	
RA301	QRD161J-333	CARBON RESISTOR	33K 5% 1/6W	
RA303	QRD161J-222	CARBON RESISTOR	2.2K 5% 1/6W	
RA304	QRD161J-103	CARBON RESISTOR	10K 5% 1/6W	
RA305	QRD161J-393	CARBON RESISTOR	39K 5% 1/6W	
RA306	QRD161J-393	CARBON RESISTOR	39K 5% 1/6W	
RA311	QRD161J-123	CARBON RESISTOR	12K 5% 1/6W	
RA312	QRD161J-183	CARBON RESISTOR	18K 5% 1/6W	
RA315	QRD161J-223	CARBON RESISTOR	22K 5% 1/6W	
RA316	QRD167J-682	CARBON RESISTOR	6.8K 5% 1/6W	
RA317	QRD161J-222	CARBON RESISTOR	2.2K 5% 1/6W	
RA318	QRD161J-222	CARBON RESISTOR	2.2K 5% 1/6W	
RA319	QRD161J-222	CARBON RESISTOR	2.2K 5% 1/6W	
RA320	QRD161J-393	CARBON RESISTOR	39K 5% 1/6W	
RA321	QRD161J-473	CARBON RESISTOR	47K 5% 1/6W	
RA322	QRD161J-223	CARBON RESISTOR	22K 5% 1/6W	
RA323	QRD161J-223	CARBON RESISTOR	22K 5% 1/6W	
RA324	QRD161J-475	CARBON RESISTOR	4.7M 5% 1/6W	
RA326	QRD161J-471	CARBON RESISTOR	470 5% 1/6W	
RA327	QRD161J-1R0	CARBON RESISTOR	1.0 5% 1/6W	
RA328	QRD161J-1R0	CARBON RESISTOR	1.0 5% 1/6W	
RA329	QRD161J-1R0	CARBON RESISTOR	1.0 5% 1/6W	
RA330	QRD161J-102	CARBON RESISTOR	1.0K 5% 1/6W	
RA331	QRD167J-682	CARBON RESISTOR	6.8K 5% 1/6W	
RA332	QRD161J-102	CARBON RESISTOR	1.0K 5% 1/6W	
RA333	QRD161J-122	CARBON RESISTOR	1.2K 5% 1/6W	
RA334	QRD161J-471	CARBON RESISTOR	470 5% 1/6W	
RA335	QRD161J-471	CARBON RESISTOR	470 5% 1/6W	
RA336	QRD161J-471	CARBON RESISTOR	470 5% 1/6W	
RA337	QRD161J-472	CARBON RESISTOR	4.7K 5% 1/6W	

BLOCK NO. 01

⚠	REF.	PARTS NO.	PARTS NAME	REMARKS	SUFFIX
	RA338	QRD161J-471	CARBON RESISTOR	470 5% 1/6W	
	RA339	QRD161J-222	CARBON RESISTOR	2.2K 5% 1/6W	
	RA340	QRD161J-222	CARBON RESISTOR	2.2K 5% 1/6W	
	RA341	QRD161J-472	CARBON RESISTOR	4.7K 5% 1/6W	
	RA342	QRD161J-472	CARBON RESISTOR	4.7K 5% 1/6W	
	RA343	QRD161J-390	CARBON RESISTOR	39 5% 1/6W	
	RA344	QRD161J-102	CARBON RESISTOR	1.0K 5% 1/6W	
	RA345	QRD167J-562	CARBON RESISTOR	5.6K 5% 1/6W	
	RA346	QRD161J-151	CARBON RESISTOR	150 5% 1/6W	
	RA347	QRZ0077-470	F RESISTOR	47 1/0W	
	RA348	QRD161J-473	CARBON RESISTOR	47K 5% 1/6W	
	RA349	QRD161J-561	CARBON RESISTOR	560 5% 1/6W	
	RA350	QRD161J-223	CARBON RESISTOR	22K 5% 1/6W	
	RA351	QRD167J-682	CARBON RESISTOR	6.8K 5% 1/6W	
	RA352	QRD161J-2R2	CARBON RESISTOR	2.2 5% 1/6W	
	RA353	QRD161J-222	CARBON RESISTOR	2.2K 5% 1/6W	
	RA354	QRD161J-103	CARBON RESISTOR	10K 5% 1/6W	
	RA357	QRD167J-682	CARBON RESISTOR	6.8K 5% 1/6W	
	RA358	QRD167J-332	CARBON RESISTOR	3.3K 5% 1/6W	
	RA359	QRD161J-103	CARBON RESISTOR	10K 5% 1/6W	
	RA361	QRD161J-101	CARBON RESISTOR	100 5% 1/6W	
	RA362	QRD161J-222	CARBON RESISTOR	2.2K 5% 1/6W	
	RA363	QRD161J-102	CARBON RESISTOR	1.0K 5% 1/6W	
	RA364	QRD161J-223	CARBON RESISTOR	22K 5% 1/6W	
	RA365	QRD161J-222	CARBON RESISTOR	2.2K 5% 1/6W	
	RA366	QRD161J-471	CARBON RESISTOR	470 5% 1/6W	
	RA368	QRD161J-472	CARBON RESISTOR	4.7K 5% 1/6W	
	RA369	QRD161J-104	CARBON RESISTOR	100K 5% 1/6W	
	RA370	QRD161J-432	CARBON RESISTOR	4.3K 5% 1/6W	
	T 1	VQT7A21-107	IFT		
	TU 1	VAF2S13-001	FRONT END	FM TU	
	VRA31	QVPA601-102A	V RESISTOR	KOA	
	X 1	VCX4001-006	CRYSTAL		

■ Pre-amplifier & Power Supply P.C. Board

BLOCK NO. 05

⚠	REF.	PARTS NO.	PARTS NAME	REMARKS	SUFFIX
	C 1	QCC11EM-223V	C.CAPACITOR	.022MF 20% 25V	
	C 3	QCC11EM-473V	C.CAPACITOR	.047MF 20% 25V	
	C 4	QCVB1CN-103Y	C.CAPACITOR	.010MF 30% 16V	
	C 5	QEK41CM-106	E.CAPACITOR	10MF 20% 16V	
	C 9	QCS11HJ-100	C.CAPACITOR	10PF 5% 50V	
	C 11	QCC11EM-473V	C.CAPACITOR	.047MF 20% 25V	
	C 12	QCS11HJ-150	C.CAPACITOR	15PF 5% 50V	
	C 13	QCBB1HK-102Y	C.CAPACITOR	1000PF 10% 50V	
	C 21	QCC11EM-473V	C.CAPACITOR	.047MF 20% 25V	
	C 30	QEK41CM-106	E.CAPACITOR	10MF 20% 16V	
	C 31	QCS31HJ-390Z	C.CAPACITOR	39PF 5% 50V	
	C 32	QCVB1CN-103Y	C.CAPACITOR	.010MF 30% 16V	
	C 33	QEK61AM-107ZM	E.CAPACITOR	100MF 20% 10V	
	C 34	QCS11HJ-150	C.CAPACITOR	15PF 5% 50V	
	C 35	QCVB1CN-103Y	C.CAPACITOR	.010MF 30% 16V	
	C 36	QEK41CM-106	E.CAPACITOR	10MF 20% 16V	
	C 37	QCVB1CN-103Y	C.CAPACITOR	.010MF 30% 16V	
	C 38	QCC11EM-473V	C.CAPACITOR	.047MF 20% 25V	
	C 39	QCC11EM-473V	C.CAPACITOR	.047MF 20% 25V	
	C 40	QCVB1CN-103Y	C.CAPACITOR	.010MF 30% 16V	
	C 41	QEK41HM-104	E.CAPACITOR	.10MF 20% 50V	
	C 42	QEK41HM-474	E.CAPACITOR	.47MF 20% 50V	
	C 44	QCS11HJ-680	C.CAPACITOR	68PF 5% 50V	
	C 45	QEK41CM-106	E.CAPACITOR	10MF 20% 16V	
	C 46	QCC31EM-333ZV	C.CAPACITOR	.033MF 20% 25V	
	C 47	QCBB1HK-331Y	C.CAPACITOR	330PF 10% 50V	
	C 49	QCC11EK-153ZV	C.CAPACITOR	.015MF 10% 25V	
	C 50	QCC11EK-153ZV	C.CAPACITOR	.015MF 10% 25V	
	C 51	QEK41HM-105	E.CAPACITOR	1.0MF 20% 50V	
	C 52	QEK41HM-105	E.CAPACITOR	1.0MF 20% 50V	
	C 55	QCS11HJ-120	C.CAPACITOR	12PF 5% 50V	
	C 60	QCBB1HK-102Y	C.CAPACITOR	1000PF 10% 50V	
	C 61	QEK61AM-107ZM	E.CAPACITOR	100MF 20% 10V	
	C 62	QCS11HJ-270	C.CAPACITOR	27PF 5% 50V	
	C 63	QCC11EM-473V	C.CAPACITOR	.047MF 20% 25V	
	C 64	QCS11HJ-120	C.CAPACITOR	12PF 5% 50V	
	C 69	QEK41HM-105	E.CAPACITOR	1.0MF 20% 50V	
	C 70	QCXB1CM-222Y	C.CAPACITOR	2200PF 20% 16V	
	C 71	QEK61HM-335ZN	E.CAPACITOR	3.3MF 20% 50V	
	C 91	QCBB1HK-102Y	C.CAPACITOR	1000PF 10% 50V	
	CA101	QETC1HM-335ZN	E.CAPACITOR	3.3MF 20% 50V	
	CA102	QCS11HJ-330	C.CAPACITOR	33PF 5% 50V	
	CA105	QETC1HM-335ZN	E.CAPACITOR	3.3MF 20% 50V	
	CA108	QFN81HJ-683	M.CAPACITOR	.068MF 5% 50V	
	CA109	QFN41HJ-333	M.CAPACITOR	.033MF 5% 50V	
	CA111	QFN41HJ-333	M.CAPACITOR	.033MF 5% 50V	
	CA112	QFN41HJ-333	M.CAPACITOR	.033MF 5% 50V	
	CA113	QCBB1HK-821Y	C.CAPACITOR	820PF 10% 50V	
	CA114	QET41CM-106	E.CAPACITOR	10MF 20% 16V	
	CA115	QFN81HJ-683	M.CAPACITOR	.068MF 5% 50V	
	CA116	QCS11HJ-680	C.CAPACITOR	68PF 5% 50V	
	CA117	QETC1HM-334ZN	E.CAPACITOR	.33MF 20% 50V	
	CA118	QFN81HJ-683	M.CAPACITOR	.068MF 5% 50V	
	CA120	QET41CM-226	E.CAPACITOR	22MF 20% 16V	
	CA121	QFN41HJ-154	M.CAPACITOR	.15MF 5% 50V	

BLOCK NO. 06

⚠	REF.	PARTS NO.	PARTS NAME	REMARKS	SUFFIX
	CA122	QET41HM-475	E.CAPACITOR	4.7MF 20% 50V	
	CA123	QET41AM-476	E.CAPACITOR	47MF 20% 10V	
	CA124	QCBB1HK-101Y	C.CAPACITOR	100PF 10% 50V	
	CA125	QET41AM-476	E.CAPACITOR	47MF 20% 10V	
	CA126	QEK61AM-227ZN	E CAPACITOR	220MF 20% 10V	
	CA128	QET41AM-227	E.CAPACITOR	220MF 20% 10V	
	CA129	QET41AM-227	E.CAPACITOR	220MF 20% 10V	
	CA130	QCC11EM-104V	C.CAPACITOR	.10MF 20% 25V	
	CA131	QCC11EM-104V	C.CAPACITOR	.10MF 20% 25V	
	CA134	QETC1HM-335ZN	E.CAPACITOR	3.3MF 20% 50V	
	CA201	QETC1HM-335ZN	E.CAPACITOR	3.3MF 20% 50V	
	CA202	QCS11HJ-330	C.CAPACITOR	33PF 5% 50V	
	CA205	QETC1HM-335ZN	E.CAPACITOR	3.3MF 20% 50V	
	CA208	QFN81HJ-683	M.CAPACITOR	.068MF 5% 50V	
	CA209	QFN41HJ-333	M.CAPACITOR	.033MF 5% 50V	
	CA211	QFN41HJ-333	M.CAPACITOR	.033MF 5% 50V	
	CA212	QFN41HJ-333	M.CAPACITOR	.033MF 5% 50V	
	CA213	QCBB1HK-821Y	C.CAPACITOR	820PF 10% 50V	
	CA214	QET41CM-106	E.CAPACITOR	10MF 20% 16V	
	CA215	QFN81HJ-683	M.CAPACITOR	.068MF 5% 50V	
	CA216	QCS11HJ-680	C.CAPACITOR	68PF 5% 50V	
	CA217	QETC1HM-334ZN	E.CAPACITOR	.33MF 20% 50V	
	CA218	QFN81HJ-683	M.CAPACITOR	.068MF 5% 50V	
	CA220	QET41CM-226	E.CAPACITOR	22MF 20% 16V	
	CA221	QFN41HJ-154	M.CAPACITOR	.15MF 5% 50V	
	CA222	QET41HM-475	E.CAPACITOR	4.7MF 20% 50V	
	CA223	QET41AM-476	E.CAPACITOR	47MF 20% 10V	
	CA224	QCBB1HK-101Y	C.CAPACITOR	100PF 10% 50V	
	CA225	QET41AM-476	E.CAPACITOR	47MF 20% 10V	
	CA226	QEK61AM-227ZN	E CAPACITOR	220MF 20% 10V	
	CA227	QET41EM-477	E.CAPACITOR	470MF 20% 25V	
	CA228	QET41AM-227	E.CAPACITOR	220MF 20% 10V	
	CA229	QET41AM-227	E.CAPACITOR	220MF 20% 10V	
	CA230	QCC11EM-104V	C.CAPACITOR	.10MF 20% 25V	
	CA231	QCC11EM-104V	C.CAPACITOR	.10MF 20% 25V	
	CA234	QETC1HM-335ZN	E.CAPACITOR	3.3MF 20% 50V	
	CA301	QCC31EM-333ZV	C.CAPACITOR	.033MF 20% 25V	
	CA302	QET41HM-475	E.CAPACITOR	4.7MF 20% 50V	
	CA303	QETC1HM-225ZN	E.CAPACITOR	2.2MF 20% 50V	
	CA304	QET41CM-226	E.CAPACITOR	22MF 20% 16V	
	CA305	QET41CM-226	E.CAPACITOR	22MF 20% 16V	
	CA310	QETC1HM-224ZN	E.CAPACITOR	.22MF 20% 50V	
	CA311	QETC1HM-106ZN	E.CAPACITOR	10MF 20% 50V	
	CA312	QET41HM-475	E.CAPACITOR	4.7MF 20% 50V	
	CA313	QET41HM-475	E.CAPACITOR	4.7MF 20% 50V	
	CA314	QET41CM-226	E.CAPACITOR	22MF 20% 16V	
	CA315	QET41AM-107	E.CAPACITOR	100MF 20% 10V	
	CA316	QET41CM-226	E.CAPACITOR	22MF 20% 16V	
	CA317	QET41HM-105	E.CAPACITOR	1.0MF 20% 50V	
	CA318	QET41HM-105	E.CAPACITOR	1.0MF 20% 50V	
	CA319	QFN81HJ-393	M.CAPACITOR	.039MF 5% 50V	
	CA320	QFN81HJ-393	M.CAPACITOR	.039MF 5% 50V	
	CA321	QET41CM-106	E.CAPACITOR	10MF 20% 16V	
	CA322	QETB1EM-688N	E.CAPACITOR	6800MF 20% 25V	
	CA323	QET41CM-106	E.CAPACITOR	10MF 20% 16V	

BLOCK NO. 06

⚠	REF.	PARTS NO.	PARTS NAME	REMARKS	SUFFIX
	CA324	QETC1HM-225ZN	E.CAPACITOR	2.2MF 20% 50V	
	CA325	QCBB1HK-221Y	C.CAPACITOR	220PF 10% 50V	
	CA326	QET41CM-226	E.CAPACITOR	22MF 20% 16V	
	CA327	QET41HM-475	E.CAPACITOR	4.7MF 20% 50V	
	CA328	QET41CM-226	E.CAPACITOR	22MF 20% 16V	
	CA329	QET41CM-106	E.CAPACITOR	10MF 20% 16V	
	CA330	QCVB1CN-103Y	C.CAPACITOR	.010MF 30% 16V	
	CA332	QCVB1CN-103Y	C.CAPACITOR	.010MF 30% 16V	
	CA333	QET41AM-107	E.CAPACITOR	100MF 20% 10V	
	CA335	QCVB1CN-103Y	C.CAPACITOR	.010MF 30% 16V	
	CA336	QET41AM-227	E.CAPACITOR	220MF 20% 10V	
	CA338	QET41EM-107	E.CAPACITOR	100MF 20% 25V	
	CA341	QCBB1HK-151Y	C.CAPACITOR	150PF 10% 50V	
	CA342	QCBB1HK-151Y	C.CAPACITOR	150PF 10% 50V	
	CA343	QCBB1HK-151Y	C.CAPACITOR	150PF 10% 50V	
	CA344	QET41AM-107	E.CAPACITOR	100MF 20% 10V	
	CA346	QET41HM-475	E.CAPACITOR	4.7MF 20% 50V	
	CF 1	VCF2L3B-112	C FILTER	FM IF	
	CF 2	VCF2L3B-112	C FILTER	FM IF	
	CF 3	VCF1Z2Z-115Z	CERAMIC FILTER		
	CF 4	CMU2-456A05	CERA LOCK		
	CNA31	VMC0075-004N	CONNECTOR	TO MIC AMP	
	CNA32	VMC0040-005	CONECTOR	TO HEAD PHONE	
	CNA33	EMV7155-007	CONNECTOR	TO CD AMP	
	CNA34	EMV7155-012R	CONNECTOR	TO MICOM	
	CNA35	EMV7155-017	CONNECTOR	TO MICOM	
	CNA37	VMC0075-015N	CONNECTOR	TO C MECHA	
	CNA38	EMV7155-014	CONNECTOR	TO PRE AMP	
	D 1	1SS133	SI DIODE		
	D 2	1SS133	SI DIODE		
	D 3	1SS133	SI DIODE		
	D 4	1SS133	SI DIODE		
	D 5	1SS133	SI DIODE		
	DA301	1SS133	SI DIODE		
	DA302	RB721Q	DIODE		
	DA303	RB721Q	DIODE		
	DA304	1SS133	SI DIODE		
	DA305	MTZ9.1JA	ZENER DIODE		
	DA306	MTZ4.3JB	ZENER DIODE		
	DA307	1SS133	SI DIODE		
	DA308	1SS133	SI DIODE		
	DA309	MTZ3.9JB	ZENER DIODE		
	DA310	RD5.6JSAB1	ZENER DIODE		
	DA311	1SS133	SI DIODE		
	DA312	1SS133	SI DIODE		
	DA313	1SS133	SI DIODE		
	DA314	1SS133	SI DIODE		
	DA315	1SR35-100	SI DIODE		
	DA316	1SS133	SI DIODE		
	DA317	1SS133	SI DIODE		
	DA318	1SS133	SI DIODE		
	DA319	1SS133	SI DIODE		
	DA321	1SS133	SI DIODE		
	DA322	1SS133	SI DIODE		
	DA325	1SS133	SI DIODE		

BLOCK NO. 06

⚠	REF.	PARTS NO.	PARTS NAME	REMARKS	SUFFIX
	IC 1	TA2057N	IC		
	IC 2	LC72131	IC		
	ICA11	TA8229K	IC	POWER AMP	
	ICA21	TA8229K	IC	POWER AMP	
	ICA31	VC4580L	IC	ADDER	
	ICA33	BH3854S	IC	E VOL	
	ICA34	XRA15218N	IC	B.BOOST	
	ICA35	VC4580L	IC	S.INDUCTOR	
	J 1	EMB41YV-302K	ANT TERMINAL	AM/FM ANT	
	JA301	VMJ3021-001	PIN JACK	AUX IN	
	JA302	EMB90TV-404A	SPK TERMINAL	SPK OUT	
	L 1	VQZ0098-101	COIL BLOCK	MW/LW RF/QSC	
	L 4	VQP0018-221	INDUCTOR		
	L 5	VQP0018-2R7	INDUCTOR		
	L 001	VCF2L3B-112	C FILTER	FM IF	
	L 002	VCF2L3B-112	C FILTER	FM IF	
	LA304	VQP0028-100Z	INDUCTOR		
	Q 1	2SC2668(O)	TRANSISTOR		
	Q 2	2SA1175	TRANSISTOR		
	Q 3	2SC2785	TRANSISTOR		
	Q 4	2SC2785	TRANSISTOR		
	Q 5	2SA1175	TRANSISTOR		
	Q 6	DTA114YS	TRANSISTOR		
	Q 7	2SC2785	TRANSISTOR		
	QA101	2SD2144S(VW)	TRANSISTOR		
	QA102	2SD2144S(VW)	TRANSISTOR		
	QA103	2SK105(E,F,H)	TRANSISTOR(FET)		
	QA104	2SK105(E,F,H)	TRANSISTOR(FET)		
	QA105	2SC2001(L,K)	TRANSISTOR		
	QA106	2SC2001(L,K)	TRANSISTOR		
	QA107	2SD2144S(VW)	TRANSISTOR		
	QA201	2SD2144S(VW)	TRANSISTOR		
	QA202	2SD2144S(VW)	TRANSISTOR		
	QA203	2SK105(E,F,H)	TRANSISTOR(FET)		
	QA204	2SK105(E,F,H)	TRANSISTOR(FET)		
	QA205	2SC2001(L,K)	TRANSISTOR		
	QA206	2SC2001(L,K)	TRANSISTOR		
	QA207	2SD2144S(VW)	TRANSISTOR		
	QA301	2SC2785	TRANSISTOR		
	QA302	DTA143ES	TRANSISTOR		
	QA304	2SA1175	TRANSISTOR		
	QA305	DTC144TS	TRANSISTOR		
	QA306	2SB1274(R,S)	TRANSISTOR		
	QA307	UN4110	TRANSISTOR		
	QA308	2SC2785	TRANSISTOR		
	QA309	2SC2785	TRANSISTOR		
	QA310	2SA1175	TRANSISTOR		
	QA311	2SC2785	TRANSISTOR		
	QA312	2SB772(Q,P)	TRANSISTOR		
	QA313	2SC2785	TRANSISTOR		
	QA314	2SA952(L,K)	TRANSISTOR		
	QA315	2SC2785	TRANSISTOR		
	QA316	2SC2785	TRANSISTOR		
	QA317	2SA1175	TRANSISTOR		
	QA318	2SC2785	TRANSISTOR		

BLOCK NO. 06

⚠	REF.	PARTS NO.	PARTS NAME	REMARKS	SUFFIX
	QA319	DTA144ES	TRANSISTOR		
	QA320	DTC144TS	TRANSISTOR		
	QA321	DTA115EK	TRANSISTOR		
	QA322	2SC2785	TRANSISTOR		
	QA323	2SC2785	TRANSISTOR		
	R 1	QRD161J-102	CARBON RESISTOR	1.0K 5% 1/6W	
	R 2	QRD161J-560	CARBON RESISTOR	56 5% 1/6W	
	R 10	QRD161J-102	CARBON RESISTOR	1.0K 5% 1/6W	
	R 12	QRD161J-103	CARBON RESISTOR	10K 5% 1/6W	
	R 13	QRD161J-104	CARBON RESISTOR	100K 5% 1/6W	
	R 15	QRD161J-103	CARBON RESISTOR	10K 5% 1/6W	
	R 16	QRD161J-103	CARBON RESISTOR	10K 5% 1/6W	
	R 20	QRD161J-331	CARBON RESISTOE	330 5% 1/6W	
	R 21	QRD161J-224	CARBON RESISTOR	220K 5% 1/6W	
	R 22	QRD161J-331	CARBON RESISTOE	330 5% 1/6W	
	R 24	QRD161J-271	CARBON RESISTOR	270 5% 1/6W	
	R 25	QRD161J-273	CARBON RESISTOR	27K 5% 1/6W	
	R 27	QRD161J-223	CARBON RESISTOR	22K 5% 1/6W	
	R 28	QRD161J-103	CARBON RESISTOR	10K 5% 1/6W	
	R 29	QRD161J-473	CARBON RESISTOR	47K 5% 1/6W	
	R 30	QRD161J-103	CARBON RESISTOR	10K 5% 1/6W	
	R 31	QRD161J-103	CARBON RESISTOR	10K 5% 1/6W	
	R 32	QRD161J-183	CARBON RESISTOR	18K 5% 1/6W	
	R 33	QRD161J-103	CARBON RESISTOR	10K 5% 1/6W	
	R 34	QRD161J-103	CARBON RESISTOR	10K 5% 1/6W	
	R 35	QRD161J-103	CARBON RESISTOR	10K 5% 1/6W	
	R 36	QRD161J-103	CARBON RESISTOR	10K 5% 1/6W	
	R 37	QRD167J-682	CARBON RESISTOR	6.8K 5% 1/6W	
	R 38	QRD161J-392	CARBON RESISTOR	3.9K 5% 1/6W	
	R 39	QRD161J-392	CARBON RESISTOR	3.9K 5% 1/6W	
	R 43	QRD161J-102	CARBON RESISTOR	1.0K 5% 1/6W	
	R 44	QRD161J-102	CARBON RESISTOR	1.0K 5% 1/6W	
	R 45	QRD161J-102	CARBON RESISTOR	1.0K 5% 1/6W	
	R 46	QRD161J-473	CARBON RESISTOR	47K 5% 1/6W	
	R 47	QRD161J-102	CARBON RESISTOR	1.0K 5% 1/6W	
	R 48	QRD161J-331	CARBON RESISTOE	330 5% 1/6W	
	R 49	QRD161J-102	CARBON RESISTOR	1.0K 5% 1/6W	
	R 50	QRD161J-473	CARBON RESISTOR	47K 5% 1/6W	
	R 51	QRD161J-473	CARBON RESISTOR	47K 5% 1/6W	
	R 52	QRD161J-472	CARBON RESISTOR	4.7K 5% 1/6W	
	R 54	QRD161J-222	CARBON RESISTOR	2.2K 5% 1/6W	
	R 55	QRD161J-472	CARBON RESISTOR	4.7K 5% 1/6W	
	R 56	QRD167J-332	CARBON RESISTOR	3.3K 5% 1/6W	
	R 57	QRD161J-102	CARBON RESISTOR	1.0K 5% 1/6W	
	R 60	QRD161J-102	CARBON RESISTOR	1.0K 5% 1/6W	
	R 61	QRD161J-102	CARBON RESISTOR	1.0K 5% 1/6W	
	R 65	QRD161J-222	CARBON RESISTOR	2.2K 5% 1/6W	
	R 66	QRD161J-222	CARBON RESISTOR	2.2K 5% 1/6W	
	R 78	QRD161J-473	CARBON RESISTOR	47K 5% 1/6W	
	RA101	QRD161J-683	CARBON RESISTOR	68K 5% 1/6W	
	RA102	QRD161J-102	CARBON RESISTOR	1.0K 5% 1/6W	
	RA103	QRD161J-472	CARBON RESISTOR	4.7K 5% 1/6W	
	RA104	QRD161J-683	CARBON RESISTOR	68K 5% 1/6W	
	RA105	QRD167J-562	CARBON RESISTOR	5.6K 5% 1/6W	
	RA106	QRD161J-472	CARBON RESISTOR	4.7K 5% 1/6W	

BLOCK NO. 06

⚠	REF.	PARTS NO.	PARTS NAME	REMARKS	SUFFIX
	RA107	QRD161J-103	CARBON RESISTOR	10K 5% 1/6W	
	RA108	QRD161J-333	CARBON RESISTOR	33K 5% 1/6W	
	RA109	QRD161J-563	CARBON RESISTOR	56K 5% 1/6W	
	RA113	QRD161J-123	CARBON RESISTOR	12K 5% 1/6W	
	RA114	QRD167J-562	CARBON RESISTOR	5.6K 5% 1/6W	
	RA116	QRD161J-822	CARBON RESISTOR	8.2K 5% 1/6W	
	RA117	QRD167J-332	CARBON RESISTOR	3.3K 5% 1/6W	
	RA118	QRD161J-334	CARBON RESISTOR	330K 5% 1/6W	
	RA119	QRD161J-393	CARBON RESISTOR	39K 5% 1/6W	
	RA120	QRD161J-103	CARBON RESISTOR	10K 5% 1/6W	
	RA121	QRD161J-104	CARBON RESISTOR	100K 5% 1/6W	
	RA122	QRD167J-332	CARBON RESISTOR	3.3K 5% 1/6W	
	RA123	QRD161J-105	CARBON RESISTOR	1.0M 5% 1/6W	
	RA124	QRD161J-105	CARBON RESISTOR	1.0M 5% 1/6W	
	RA125	QRD161J-274	CARBON RESISTOR	270K 5% 1/6W	
	RA126	QRD161J-821	CARBON RESISTOR	820 5% 1/6W	
	RA127	QRD161J-472	CARBON RESISTOR	4.7K 5% 1/6W	
	RA128	QRD161J-152	CARBON RESISTOR	1.5K 5% 1/6W	
	RA129	QRD161J-181	CARBON RESISTOR	180 5% 1/6W	
	RA130	QRD161J-222	CARBON RESISTOR	2.2K 5% 1/6W	
	RA131	QRD161J-475	CARBON RESISTOR	4.7M 5% 1/6W	
	RA132	QRD161J-475	CARBON RESISTOR	4.7M 5% 1/6W	
	RA133	QRD161J-474	CARBON RESISTOR	470K 5% 1/6W	
	RA134	QRD161J-222	CARBON RESISTOR	2.2K 5% 1/6W	
	RA135	QRD161J-472	CARBON RESISTOR	4.7K 5% 1/6W	
	RA136	QRD161J-331	CARBON RESISTOE	330 5% 1/6W	
	RA137	QRD161J-331	CARBON RESISTOE	330 5% 1/6W	
	RA138	QRD161J-273	CARBON RESISTOR	27K 5% 1/6W	
	RA139	QRD161J-2R2	CARBON RESISTOR	2.2 5% 1/6W	
	RA140	QRD161J-2R2	CARBON RESISTOR	2.2 5% 1/6W	
	RA141	QRD161J-820	CARBON RESISTOR	82 5% 1/6W	
	RA145	QRD161J-820	CARBON RESISTOR	82 5% 1/6W	
	RA201	QRD161J-683	CARBON RESISTOR	68K 5% 1/6W	
	RA202	QRD161J-102	CARBON RESISTOR	1.0K 5% 1/6W	
	RA203	QRD161J-472	CARBON RESISTOR	4.7K 5% 1/6W	
	RA204	QRD161J-683	CARBON RESISTOR	68K 5% 1/6W	
	RA205	QRD167J-562	CARBON RESISTOR	5.6K 5% 1/6W	
	RA206	QRD161J-472	CARBON RESISTOR	4.7K 5% 1/6W	
	RA207	QRD161J-103	CARBON RESISTOR	10K 5% 1/6W	
	RA208	QRD161J-333	CARBON RESISTOR	33K 5% 1/6W	
	RA209	QRD161J-563	CARBON RESISTOR	56K 5% 1/6W	
	RA213	QRD161J-123	CARBON RESISTOR	12K 5% 1/6W	
	RA214	QRD167J-562	CARBON RESISTOR	5.6K 5% 1/6W	
	RA216	QRD161J-822	CARBON RESISTOR	8.2K 5% 1/6W	
	RA217	QRD167J-332	CARBON RESISTOR	3.3K 5% 1/6W	
	RA218	QRD161J-334	CARBON RESISTOR	330K 5% 1/6W	
	RA219	QRD161J-393	CARBON RESISTOR	39K 5% 1/6W	
	RA220	QRD161J-103	CARBON RESISTOR	10K 5% 1/6W	
	RA221	QRD161J-104	CARBON RESISTOR	100K 5% 1/6W	
	RA222	QRD167J-332	CARBON RESISTOR	3.3K 5% 1/6W	
	RA223	QRD161J-105	CARBON RESISTOR	1.0M 5% 1/6W	
	RA224	QRD161J-105	CARBON RESISTOR	1.0M 5% 1/6W	
	RA225	QRD161J-274	CARBON RESISTOR	270K 5% 1/6W	
	RA226	QRD161J-821	CARBON RESISTOR	820 5% 1/6W	
	RA227	QRD161J-472	CARBON RESISTOR	4.7K 5% 1/6W	

BLOCK NO. 06

⚠	REF.	PARTS NO.	PARTS NAME	REMARKS	SUFFIX
	RA228	QRD161J-152	CARBON RESISTOR	1.5K 5% 1/6W	
	RA229	QRD161J-181	CARBON RESISTOR	180 5% 1/6W	
	RA230	QRD161J-222	CARBON RESISTOR	2.2K 5% 1/6W	
	RA231	QRD161J-475	CARBON RESISTOR	4.7M 5% 1/6W	
	RA232	QRD161J-475	CARBON RESISTOR	4.7M 5% 1/6W	
	RA233	QRD161J-474	CARBON RESISTOR	470K 5% 1/6W	
	RA234	QRD161J-222	CARBON RESISTOR	2.2K 5% 1/6W	
	RA235	QRD161J-472	CARBON RESISTOR	4.7K 5% 1/6W	
	RA236	QRD161J-331	CARBON RESISTOE	330 5% 1/6W	
	RA237	QRD161J-331	CARBON RESISTOE	330 5% 1/6W	
	RA238	QRD161J-273	CARBON RESISTOR	27K 5% 1/6W	
	RA239	QRD161J-2R2	CARBON RESISTOR	2.2 5% 1/6W	
	RA240	QRD161J-2R2	CARBON RESISTOR	2.2 5% 1/6W	
	RA241	QRD161J-820	CARBON RESISTOR	82 5% 1/6W	
	RA245	QRD161J-820	CARBON RESISTOR	82 5% 1/6W	
	RA301	QRD161J-333	CARBON RESISTOR	33K 5% 1/6W	
	RA303	QRD161J-222	CARBON RESISTOR	2.2K 5% 1/6W	
	RA304	QRD161J-103	CARBON RESISTOR	10K 5% 1/6W	
	RA305	QRD161J-393	CARBON RESISTOR	39K 5% 1/6W	
	RA306	QRD161J-393	CARBON RESISTOR	39K 5% 1/6W	
	RA311	QRD161J-123	CARBON RESISTOR	12K 5% 1/6W	
	RA312	QRD161J-183	CARBON RESISTOR	18K 5% 1/6W	
	RA315	QRD161J-223	CARBON RESISTOR	22K 5% 1/6W	
	RA316	QRD167J-682	CARBON RESISTOR	6.8K 5% 1/6W	
	RA317	QRD161J-222	CARBON RESISTOR	2.2K 5% 1/6W	
	RA318	QRD161J-222	CARBON RESISTOR	2.2K 5% 1/6W	
	RA319	QRD161J-222	CARBON RESISTOR	2.2K 5% 1/6W	
	RA320	QRD161J-393	CARBON RESISTOR	39K 5% 1/6W	
	RA321	QRD161J-473	CARBON RESISTOR	47K 5% 1/6W	
	RA322	QRD161J-223	CARBON RESISTOR	22K 5% 1/6W	
	RA323	QRD161J-223	CARBON RESISTOR	22K 5% 1/6W	
	RA324	QRD161J-475	CARBON RESISTOR	4.7M 5% 1/6W	
	RA326	QRD161J-471	CARBON RESISTOR	470 5% 1/6W	
	RA327	QRD161J-1R0	CARBON RESISTOR	1.0 5% 1/6W	
	RA328	QRD161J-1R0	CARBON RESISTOR	1.0 5% 1/6W	
	RA329	QRD161J-1R0	CARBON RESISTOR	1.0 5% 1/6W	
	RA330	QRD161J-102	CARBON RESISTOR	1.0K 5% 1/6W	
	RA331	QRD167J-682	CARBON RESISTOR	6.8K 5% 1/6W	
	RA332	QRD161J-102	CARBON RESISTOR	1.0K 5% 1/6W	
	RA333	QRD161J-122	CARBON RESISTOR	1.2K 5% 1/6W	
	RA334	QRD161J-471	CARBON RESISTOR	470 5% 1/6W	
	RA335	QRD161J-471	CARBON RESISTOR	470 5% 1/6W	
	RA336	QRD161J-471	CARBON RESISTOR	470 5% 1/6W	
	RA337	QRD161J-472	CARBON RESISTOR	4.7K 5% 1/6W	
	RA338	QRD161J-471	CARBON RESISTOR	470 5% 1/6W	
	RA339	QRD161J-222	CARBON RESISTOR	2.2K 5% 1/6W	
	RA340	QRD161J-222	CARBON RESISTOR	2.2K 5% 1/6W	
	RA341	QRD161J-472	CARBON RESISTOR	4.7K 5% 1/6W	
	RA342	QRD161J-472	CARBON RESISTOR	4.7K 5% 1/6W	
	RA343	QRD161J-390	CARBON RESISTOR	39 5% 1/6W	
	RA344	QRD161J-102	CARBON RESISTOR	1.0K 5% 1/6W	
	RA345	QRD167J-562	CARBON RESISTOR	5.6K 5% 1/6W	
	RA346	QRD161J-151	CARBON RESISTOR	150 5% 1/6W	
	RA347	QRZ0077-470	F RESISTOR	47 1/0W	
	RA348	QRD161J-473	CARBON RESISTOR	47K 5% 1/6W	

BLOCK NO. 06

⚠	REF.	PARTS NO.	PARTS NAME	REMARKS	SUFFIX
	RA349	QRD161J-561	CARBON RESISTOR	560 5% 1/6W	
	RA350	QRD161J-223	CARBON RESISTOR	22K 5% 1/6W	
	RA351	QRD167J-682	CARBON RESISTOR	6.8K 5% 1/6W	
	RA352	QRD161J-2R2	CARBON RESISTOR	2.2 5% 1/6W	
	RA353	QRD161J-222	CARBON RESISTOR	2.2K 5% 1/6W	
	RA354	QRD161J-103	CARBON RESISTOR	10K 5% 1/6W	
	RA357	QRD167J-682	CARBON RESISTOR	6.8K 5% 1/6W	
	RA358	QRD167J-332	CARBON RESISTOR	3.3K 5% 1/6W	
	RA359	QRD161J-103	CARBON RESISTOR	10K 5% 1/6W	
	RA361	QRD161J-101	CARBON RESISTOR	100 5% 1/6W	
	RA362	QRD161J-222	CARBON RESISTOR	2.2K 5% 1/6W	
	RA363	QRD161J-102	CARBON RESISTOR	1.0K 5% 1/6W	
	RA364	QRD161J-223	CARBON RESISTOR	22K 5% 1/6W	
	RA365	QRD161J-222	CARBON RESISTOR	2.2K 5% 1/6W	
	RA366	QRD161J-471	CARBON RESISTOR	470 5% 1/6W	
	RA368	QRD161J-472	CARBON RESISTOR	4.7K 5% 1/6W	
	RA369	QRD161J-104	CARBON RESISTOR	100K 5% 1/6W	
	RA370	QRD161J-432	CARBON RESISTOR	4.3K 5% 1/6W	
	T 1	VQT7A21-107	IFT		
	TU 1	VAF3S01-001	FRONT END	FM TU	
	VRA31	QVPA601-102A	V RESISTOR	KOA	
	X 1	VCX4001-006	CRYSTAL		

■ Pre-Amplifier & Power Supply P. C. Board

BLOCK NO. 02

⚠	REF.	PARTS NO.	PARTS NAME	REMARKS	SUFFIX
	C 101	QCBB1HK-561Y	C.CAPACITOR	560PF 10% 50V	
	C 102	QCBB1HK-561Y	C.CAPACITOR	560PF 10% 50V	
	C 103	QCBB1HK-151Y	C.CAPACITOR	150PF 10% 50V	
	C 104	QEK51AM-107	E CAPACITOR	100MF 20% 10V	
	C 105	QFN41HJ-123	M.CAPACITOR	.012MF 5% 50V	
	C 106	QET41HM-105	E.CAPACITOR	1.0MF 20% 50V	
	C 108	QET41HM-105	E.CAPACITOR	1.0MF 20% 50V	
	C 109	QCBB1HK-102Y	C.CAPACITOR	1000PF 10% 50V	
	C 110	QET41HM-475	E.CAPACITOR	4.7MF 20% 50V	
	C 111	QFN81HJ-183	M.CAPACITOR	.018MF 5% 50V	
	C 113	QFN41HJ-153	M.CAPACITOR	.015MF 5% 50V	
	C 114	QET41CM-106	E.CAPACITOR	10MF 20% 16V	
	C 115	QCC11EM-104V	C.CAPACITOR	.10MF 20% 25V	
	C 116	QCBB1HK-102Y	C.CAPACITOR	1000PF 10% 50V	
	C 117	QCS32HJ-151ZV	C.CAPACITOR	150PF 5% 500V	
	C 118	QCBB1HK-331Y	C.CAPACITOR	330PF 10% 50V	
	C 119	QET41HM-105	E.CAPACITOR	1.0MF 20% 50V	
	C 201	QCBB1HK-561Y	C.CAPACITOR	560PF 10% 50V	
	C 202	QCBB1HK-561Y	C.CAPACITOR	560PF 10% 50V	
	C 203	QCBB1HK-151Y	C.CAPACITOR	150PF 10% 50V	
	C 204	QEK51AM-107	E CAPACITOR	100MF 20% 10V	
	C 205	QFN41HJ-123	M.CAPACITOR	.012MF 5% 50V	
	C 206	QET41HM-105	E.CAPACITOR	1.0MF 20% 50V	
	C 208	QET41HM-105	E.CAPACITOR	1.0MF 20% 50V	
	C 209	QCBB1HK-102Y	C.CAPACITOR	1000PF 10% 50V	
	C 210	QET41HM-475	E.CAPACITOR	4.7MF 20% 50V	
	C 211	QFN81HJ-183	M.CAPACITOR	.018MF 5% 50V	
	C 213	QFN41HJ-153	M.CAPACITOR	.015MF 5% 50V	
	C 214	QET41CM-106	E.CAPACITOR	10MF 20% 16V	
	C 215	QCC11EM-104V	C.CAPACITOR	.10MF 20% 25V	
	C 216	QCBB1HK-102Y	C.CAPACITOR	1000PF 10% 50V	
	C 217	QCS32HJ-151ZV	C.CAPACITOR	150PF 5% 500V	
	C 218	QCBB1HK-331Y	C.CAPACITOR	330PF 10% 50V	
	C 219	QET41HM-105	E.CAPACITOR	1.0MF 20% 50V	
	C 301	QET41AM-107	E.CAPACITOR	100MF 20% 10V	
	C 302	QET41HM-475	E.CAPACITOR	4.7MF 20% 50V	
	C 303	QET41HM-475	E.CAPACITOR	4.7MF 20% 50V	
	C 304	QET41AM-476	E.CAPACITOR	47MF 20% 10V	
	C 305	QET41CM-226	E.CAPACITOR	22MF 20% 16V	
	C 306	QET41HM-105	E.CAPACITOR	1.0MF 20% 50V	
	C 307	QET41AM-107	E.CAPACITOR	100MF 20% 10V	
	C 308	QET41CM-106	E.CAPACITOR	10MF 20% 16V	
	C 309	QET41AM-476	E.CAPACITOR	47MF 20% 10V	
	C 310	QET41AM-476	E.CAPACITOR	47MF 20% 10V	
	C 311	QFN81HJ-562	M.CAPACITOR	5600PF 5% 50V	
	C 312	QFN81HJ-562	M.CAPACITOR	5600PF 5% 50V	
	C 313	QFN41HJ-153	M.CAPACITOR	.015MF 5% 50V	
	C 315	QET41CM-476	E.CAPACITOR	47MF 20% 16V	
	C 316	QET41CM-476	E.CAPACITOR	47MF 20% 16V	
	C 317	QET41HM-105	E.CAPACITOR	1.0MF 20% 50V	
	C 318	QFG32AJ-153ZN	PP CAPACITOR	.015MF 5% 100V	
	C 319	QCVB1CN-103Y	C.CAPACITOR	.010MF 30% 16V	
	C 320	QFN31HJ-272	M CAPACITOR	2700PF 5% 50V	VX
	C 321	QCVB1CN-103Y	C.CAPACITOR	.010MF 30% 16V	VX
	C 322	QFN31HJ-122	M.CAPACITOR	1200PF 5% 50V	VX

BLOCK NO. 02

⚠	REF.	PARTS NO.	PARTS NAME	REMARKS	SUFFIX
	C 901	QFN81HJ-683	M.CAPACITOR	.068MF 5% 50V	
	C 902	QFN81HJ-683	M.CAPACITOR	.068MF 5% 50V	
	C 903	QFN81HJ-683	M.CAPACITOR	.068MF 5% 50V	
	C 904	QFN81HJ-683	M.CAPACITOR	.068MF 5% 50V	
	CN301	VMC0040-003	CONNECTOR	TO PB HEAD	
	CN302	VMC0040-007	CONNECTOR	TO R/P HEAD	
	CN303	EMV7155-014	CONNECTOR	TO MAIN AMP	
	CN901	VMZ0076-002A	CONNECTOR	TO TRANS	
	CN902	VMZ0076-002	CONNECTOR	TO TRANS	
	CN903	VMC0040-003	CONNECTOR	TO MAIN	
	D 101	1SS133	SI DIODE		
	D 102	1SS133	SI DIODE		
	D 201	1SS133	SI DIODE		
	D 202	1SS133	SI DIODE		
	D 301	1SS133	SI DIODE		
	D 302	1SS133	SI DIODE		
	D 303	1SS133	SI DIODE		
	D 304	1SS133	SI DIODE		
	D 305	1SS133	SI DIODE		
	D 306	1SS133	SI DIODE		
	D 901	1N5401TM	SI DIODE		
	D 902	1N5401TM	SI DIODE		
	D 903	1N5401TM	SI DIODE		
	D 904	1N5401TM	SI DIODE		
	D 905	1N5401TM	SI DIODE		
	IC301	LA3246	IC	PB AMP	
	IC302	UPC1330HA	IC	HEAD SW	
	IC303	LA3220	IC	REC AMP	
	J 901	QMC0263-004BS	AC SOCKET		
	J 902	QMA431B-V01	DC JACK		VX
	L 101	VQP0001-562ZS	INDUCTOR		
	L 102	VQP0001-183	INDUCTOR		
	L 201	VQP0001-562ZS	INDUCTOR		
	L 202	VQP0001-183	INDUCTOR		
	L 301	VQP002B-100Z	INDUCTOR		
	L 302	VQH1008-048	OSC COIL(BIAS)		
	Q 101	2SC2001(L,K)	TRANSISTOR		
	Q 102	DTC144TS	TRANSISTOR		
	Q 201	2SC2001(L,K)	TRANSISTOR		
	Q 202	DTC144TS	TRANSISTOR		
	Q 301	DTC144ES	TRANSISTOR		
	Q 302	2SC2785	TRANSISTOR		
	Q 303	DTC144TS	TRANSISTOR		
	Q 304	2SC2001(L,K)	TRANSISTOR		
	Q 305	2SC2001(L,K)	TRANSISTOR		
	Q 306	2SC2001(L,K)	TRANSISTOR		
	Q 307	2SC2001(L,K)	TRANSISTOR		
	Q 308	2SC2785	TRANSISTOR		
	Q 309	2SC1845	TRANSISTOR		
	Q 310	2SC2785	TRANSISTOR		
	Q 311	2SC1845	TRANSISTOR		
	R 101	QRD161J-104	CARBON RESISTOR	100K 5% 1/6W	
	R 102	QRD161J-104	CARBON RESISTOR	100K 5% 1/6W	
	R 103	QRD161J-560	CARBON RESISTOR	56 5% 1/6W	
	R 104	QRD161J-123	CARBON RESISTOR	12K 5% 1/6W	

BLOCK NO. 02

⚠	REF.	PARTS NO.	PARTS NAME	REMARKS	SUFFIX
	R 105	QRD161J-153	CARBON RESISTOR	15K 5% 1/6W	
	R 106	QRD161J-183	CARBON RESISTOR	18K 5% 1/6W	
	R 107	QRD161J-154	CARBON RESISTOR	150K 5% 1/6W	
	R 108	QRD161J-272	CARBON RESISTOR	2.7K 5% 1/6W	
	R 110	QRD161J-472	CARBON RESISTOR	4.7K 5% 1/6W	
	R 111	QRD161J-472	CARBON RESISTOR	4.7K 5% 1/6W	
	R 112	QRD161J-104	CARBON RESISTOR	100K 5% 1/6W	
	R 113	QRD161J-102	CARBON RESISTOR	1.0K 5% 1/6W	
	R 114	QRD161J-101	CARBON RESISTOR	100 5% 1/6W	
	R 116	QRD161J-152	CARBON RESISTOR	1.5K 5% 1/6W	
	R 118	QRD161J-681	CARBON RESISTOR	680 5% 1/6W	
	R 120	QRD161J-103	CARBON RESISTOR	10K 5% 1/6W	
	R 122	QRD161J-102	CARBON RESISTOR	1.0K 5% 1/6W	
	R 201	QRD161J-104	CARBON RESISTOR	100K 5% 1/6W	
	R 202	QRD161J-104	CARBON RESISTOR	100K 5% 1/6W	
	R 203	QRD161J-560	CARBON RESISTOR	56 5% 1/6W	
	R 204	QRD161J-123	CARBON RESISTOR	12K 5% 1/6W	
	R 205	QRD161J-153	CARBON RESISTOR	15K 5% 1/6W	
	R 206	QRD161J-183	CARBON RESISTOR	18K 5% 1/6W	
	R 207	QRD161J-154	CARBON RESISTOR	150K 5% 1/6W	
	R 208	QRD161J-272	CARBON RESISTOR	2.7K 5% 1/6W	
	R 210	QRD161J-472	CARBON RESISTOR	4.7K 5% 1/6W	
	R 211	QRD161J-472	CARBON RESISTOR	4.7K 5% 1/6W	
	R 212	QRD161J-104	CARBON RESISTOR	100K 5% 1/6W	
	R 213	QRD161J-102	CARBON RESISTOR	1.0K 5% 1/6W	
	R 214	QRD161J-101	CARBON RESISTOR	100 5% 1/6W	
	R 216	QRD161J-152	CARBON RESISTOR	1.5K 5% 1/6W	
	R 218	QRD161J-681	CARBON RESISTOR	680 5% 1/6W	
	R 220	QRD161J-103	CARBON RESISTOR	10K 5% 1/6W	
	R 222	QRD161J-102	CARBON RESISTOR	1.0K 5% 1/6W	
	R 301	QRD161J-181	CARBON RESISTOR	180 5% 1/6W	
	R 302	QRD161J-333	CARBON RESISTOR	33K 5% 1/6W	
	R 303	QRD161J-472	CARBON RESISTOR	4.7K 5% 1/6W	
	R 304	QRD161J-473	CARBON RESISTOR	47K 5% 1/6W	
	R 305	QRD161J-181	CARBON RESISTOR	180 5% 1/6W	
	R 306	QRD161J-272	CARBON RESISTOR	2.7K 5% 1/6W	
	R 307	QRD161J-473	CARBON RESISTOR	47K 5% 1/6W	
	R 308	QRD161J-333	CARBON RESISTOR	33K 5% 1/6W	
	R 309	QRD161J-123	CARBON RESISTOR	12K 5% 1/6W	
	R 310	QRD161J-475	CARBON RESISTOR	4.7M 5% 1/6W	
	R 311	QRD161J-181	CARBON RESISTOR	180 5% 1/6W	
	R 312	QRD161J-472	CARBON RESISTOR	4.7K 5% 1/6W	
	R 313	QRD161J-680	CARBON RESISTOR	68 5% 1/6W	
	R 314	QRD161J-680	CARBON RESISTOR	68 5% 1/6W	
	R 315	QRD161J-273	CARBON RESISTOR	27K 5% 1/6W	
	R 316	QRD161J-273	CARBON RESISTOR	27K 5% 1/6W	
	R 317	QRD167J-4R7	CARBON RESISTOR	4.7 5% 1/6W	
	R 319	QRD161J-181	CARBON RESISTOR	180 5% 1/6W	
	R 320	QRD161J-181	CARBON RESISTOR	180 5% 1/6W	
	R 321	QRD161J-472	CARBON RESISTOR	4.7K 5% 1/6W	
	R 322	QRD161J-472	CARBON RESISTOR	4.7K 5% 1/6W	
	R 323	QRD161J-473	CARBON RESISTOR	47K 5% 1/6W	
	R 324	QRD161J-223	CARBON RESISTOR	22K 5% 1/6W	
	R 325	QRD161J-152	CARBON RESISTOR	1.5K 5% 1/6W	
	R 326	QRD161J-223	CARBON RESISTOR	22K 5% 1/6W	

BLOCK NO. 02

⚠	REF.	PARTS NO.	PARTS NAME	REMARKS	SUFFIX
	R 327	QRD161J-152	CARBON RESISTOR	1.5K 5% 1/6W	
	R 328	QRD161J-102	CARBON RESISTOR	1.0K 5% 1/6W	
	R 395	QRD161J-473	CARBON RESISTOR	47K 5% 1/6W	
	R 397	QRD161J-473	CARBON RESISTOR	47K 5% 1/6W	
	R 399	QRD161J-473	CARBON RESISTOR	47K 5% 1/6W	
	R 901	QRD161J-472	CARBON RESISTOR	4.7K 5% 1/6W	
	VR101	QVPA603-104A	V RESISTOR	REC/PB F.ADJ:L	
	VR201	QVPA603-104A	V RESISTOR	REC/PB F.ADJ:R	

■ Operation Switch & System Micro Computer .P.C. Board

BLOCK NO. 03

⚠	REF.	PARTS NO.	PARTS NAME	REMARKS	SUFFIX
	C 701	QET41AM-227	E.CAPACITOR	220MF 20% 10V	
	C 702	QCVB1CN-103Y	C.CAPACITOR	.010MF 30% 16V	
	C 703	QETB0JM-338M	E CAPACITOR	3300MF 20% 6.3V	
	C 704	QET41CM-106	E.CAPACITOR	10MF 20% 16V	
	C 705	QET41HM-475	E.CAPACITOR	4.7MF 20% 50V	
	C 706	QCVB1CN-103Y	C.CAPACITOR	.010MF 30% 16V	
	C 707	QCBB1HK-102Y	C.CAPACITOR	1000PF 10% 50V	
	C 708	QCS31HJ-390Z	C.CAPACITOR	39PF 5% 50V	
	C 709	QCT05CH-180V	C.CAPACITOR	18PF 5% 50V	
	C 710	QCT30CH-200Y	C.CAPACITOR	20PF 5% 50V	
	C 711	QCS31HJ-390Z	C.CAPACITOR	39PF 5% 50V	
	C 712	QCBB1HK-102Y	C.CAPACITOR	1000PF 10% 50V	
	C 713	QCT30CH-200Y	C.CAPACITOR	20PF 5% 50V	
	C 714	QCT30CH-200Y	C.CAPACITOR	20PF 5% 50V	
	C 715	QFN41HJ-104	M.CAPACITOR	AVDD	
	C 716	QCBB1HK-151Y	C.CAPACITOR	NOISE	
	C 717	QCBB1HK-471Y	C.CAPACITOR	470PF 10% 50V	
	C 718	QCVB1CN-103Y	C.CAPACITOR	NOISE	
	C 720	QET41AM-476	E.CAPACITOR	47MF 20% 10V	
	C 722	QCC11EM-104V	C.CAPACITOR	NOISE	
	C 723	QCC11EM-104V	C.CAPACITOR	.10MF 20% 25V	
	CM301	QETC1HM-225ZN	E.CAPACITOR	2.2MF 20% 50V	
	CM302	QCS11HJ-150	C.CAPACITOR	HI-CUT	
	CM303	QET41HM-475	E.CAPACITOR	ALC	
	CM304	QET41AM-107	E.CAPACITOR	VCC	
	CM305	QET41AM-227	E.CAPACITOR	220MF 20% 10V	
	CM306	QET41HM-105	E.CAPACITOR	1.0MF 20% 50V	
	CM307	QCBB1HK-151Y	C.CAPACITOR	FOR FTZ	
	CM308	QCXB1CM-392Y	C.CAPACITOR	3900PF 20% 16V	
	CM309	QCBB1HK-151Y	C.CAPACITOR	150PF 10% 50V	
	CM310	QCBB1HK-151Y	C.CAPACITOR	150PF 10% 50V	
	CN701	EMV7155-012R	CONNECTOR	MICOM/MAIN	
	CN702	EMV7155-017	CONNECTOR	MICOM/MAIN	
	CN703	EMV7155-009	CONNECTOR	TO CD	
	CN704	VMC0314-S16	CONNECTOR	TO KEY SW	
	CN705	VMC0314-P16	CONNECTOR	TO UCOM	
	CN706	EMV7155-007	CONNECTOR	MOTOR/CD SW	
	CS304	QET41AM-476	E.CAPACITOR	REM DECUP	
	CS305	QCBB1HK-681Y	C.CAPACITOR	REM OUT	
	CS306	QEK41CM-226	E.CAPACITOR	22MF 20% 16V	
	D 701	RB721Q	DIODE	DVDD	
	D 702	1SS133	SI DIODE		
	D 703	1SS133	SI DIODE		
	D 704	1SS133	SI DIODE		
	D 705	MTZ5.1JAT-77	ZENER DIODE		
	D 706	1SS133	SI DIODE	SW	
	D 707	1SS133	SI DIODE	LED	
	D 708	1SS133	SI DIODE		
	DM301	1SS133	SI DIODE		
	DS302	SLZ-981C13-T2	LED I M	ST-BY	
	DS303	SLZ-981A09-T6	LED	COMPU PLAY	
	DS304	SLZ-981A09-T6	LED	COMPU PLAY	
	DS305	SLZ-981A09-T6	LED	COMPU PLAY	
	DS306	SLZ-981C13-T2	LED I M	S.BASS	
	DS307	SRZ-932C22-T1	LED I M	INFRARED	

BLOCK NO. 03

REF.	PARTS NO.	PARTS NAME	REMARKS	SUFFIX
DS308	1SS133	SI DIODE	ST-BY	
DS309	1SS133	SI DIODE	ST-BY	
DS310	1SS133	SI DIODE	COMPU	
DS311	1SS133	SI DIODE	COMPU	
DS312	1SS133	SI DIODE	COMPU	
DS313	1SS133	SI DIODE	COMPU	
DS314	1SS133	SI DIODE	COMPU	
DS315	1SS133	SI DIODE	COMPU	
DS316	SLZ-381F09-T6	LED	CD	
DS317	SLZ-381F09-T6	LED	TUNER	
DS318	SLZ-381F09-T6	LED	AUX	
DS319	1SS133	SI DIODE	LED	
ICM31	BA15218N	IC	MIC AMP	
ICS31	SBX1785-52A	RM RECIVER		
IC701	UPD75336GC-120	IC	SYSTEM MICOM	
JA303	VMJ4026-001	HEADPHONE JACK		
JM301	QMS6035-V02	JACK	MIC JACK	
L 701	VQP0028-100Z	INDUCTOR	DVDD	
L 702	VQZ0048-009	INDUCTOR	DGND	
L 703	VQP0028-100Z	INDUCTOR	AVDD	
L 704	VQP0018-4R7	INDUCTOR		
L 705	VQP0018-4R7	INDUCTOR		
LA101	VQP0018-470	INDUCTOR	BD FTZ	
LA201	VQP0018-470	INDUCTOR	BD FTZ	
LA301	VQP0018-470	INDUCTOR	BD FTZ	
LCD01	VGL1164-001	LCD		
PL 01	VGZ0001-057	LAMP		
PL 02	VGZ0001-057	LAMP		
Q 701	2SC3330	TRANSISTOR	AC/DC	
Q 702	DTC114ES	TRANSISTOR	JACK MPX	
Q 703	DTC114ES	TRANSISTOR	JACK MPX	
Q 704	2SA1317	TRANSISTOR	CLK SHIFT	
Q 705	2SA1317	TRANSISTOR	CLK SHIFT	
Q 706	2SC3330	TRANSISTOR	BUP SW	
Q 707	2SA1317	TRANSISTOR	A/D SW	
Q 708	DTC114TN	TRANSISTOR	RESET	
Q 709	DTC114ES	TRANSISTOR	LAMP	
Q 710	2SA952(L,K)	TRANSISTOR	LAMP SW	
QM301	2SD2144S(VW)	TRANSISTOR	ATT	
QS301	DTC114TN	TRANSISTOR	P LED SW	
QS302	2SC3330	TRANSISTOR	I LED SW	
QS303	DTA114TS	TRANSISTOR	C LED SW	
QS304	DTA114TS	TRANSISTOR	C LED SW	
QS305	DTA114TS	TRANSISTOR	C LED SW	
QS306	DTC144TS	TRANSISTOR	C LED SW	
QS307	2SC2785	TRANSISTOR	S.BASS	
QS308	DTC114TN	TRANSISTOR	SENSOR	
QS309	DTC114ES	TRANSISTOR	LED KILL	
R 702	QRD161J-331	CARBON RESISTOE	330 5% 1/6W	
R 703	QRD161J-103	CARBON RESISTOR	10K 5% 1/6W	
R 704	QRD161J-472	CARBON RESISTOR	4.7K 5% 1/6W	
R 705	QRD161J-102	CARBON RESISTOR	LAMP	
R 706	QRD161J-473	CARBON RESISTOR	LAMP	
R 707	QRD161J-102	CARBON RESISTOR	POUT	
R 708	QRD161J-222	CARBON RESISTOR	S.LED	

BLOCK NO. 03

REF.	PARTS NO.	PARTS NAME	REMARKS	SUFFIX
R 709	QRD161J-102	CARBON RESISTOR	FCD	
R 710	QRD161J-222	CARBON RESISTOR	FAUX	
R 711	QRD161J-102	CARBON RESISTOR	FTU	
R 712	QRD161J-222	CARBON RESISTOR	ECHO	
R 713	QRD161J-101	CARBON RESISTOR	XTSTOP	
R 714	QRD161J-222	CARBON RESISTOR	BEAT	
R 715	QRD161J-223	CARBON RESISTOR	XT2	
R 717	QRD161J-681	CARBON RESISTOR	CLK	
R 718	QRD161J-681	CARBON RESISTOR	CLK	
R 719	QRD161J-103	CARBON RESISTOR	A/D SW	
R 720	QRD161J-101	CARBON RESISTOR	AGND	
R 721	QRD161J-223	CARBON RESISTOR	22K 5% 1/6W	
R 722	QRD161J-223	CARBON RESISTOR	22K 5% 1/6W	
R 723	QRD161J-104	CARBON RESISTOR	100K 5% 1/6W	
R 724	QRD161J-222	CARBON RESISTOR	KEY2	
R 725	QRD161J-222	CARBON RESISTOR	KEY1	
R 726	QRD161J-222	CARBON RESISTOR	KEYA/B	
R 727	QRD161J-103	CARBON RESISTOR	KEYA/B	
R 728	QRD161J-103	CARBON RESISTOR	JACK	
R 729	QRD161J-103	CARBON RESISTOR	10K 5% 1/6W	
R 730	QRD161J-103	CARBON RESISTOR	10K 5% 1/6W	
R 731	QRD161J-473	CARBON RESISTOR	47K 5% 1/6W	
R 732	QRD161J-434YT	CARBON RESISTOR	CLOSE	
R 733	QRD161J-823	CARBON RESISTOR	OPEN	
R 734	QRD161J-224	CARBON RESISTOR	REST	
R 735	QRD161J-473	CARBON RESISTOR	MPX	
R 736	QRD161J-104	CARBON RESISTOR	JACK	
R 737	QRD161J-222	CARBON RESISTOR	SAFETY	
R 738	QRD161J-222	CARBON RESISTOR	DOOR SW	
R 739	QRD161J-222	CARBON RESISTOR	JACK/MPX	
R 740	QRD161J-102	CARBON RESISTOR	CD	
R 741	QRD161J-102	CARBON RESISTOR	CD	
R 742	QRD161J-102	CARBON RESISTOR	CD	
R 743	QRD161J-102	CARBON RESISTOR	CD	
R 744	QRD161J-102	CARBON RESISTOR	1.0K 5% 1/6W	
R 745	QRD161J-102	CARBON RESISTOR	1.0K 5% 1/6W	
R 746	QRD161J-102	CARBON RESISTOR	1.0K 5% 1/6W	
R 747	QRD161J-102	CARBON RESISTOR	1.0K 5% 1/6W	
R 748	QRD161J-102	CARBON RESISTOR	1.0K 5% 1/6W	
R 749	QRD161J-102	CARBON RESISTOR	1.0K 5% 1/6W	
R 750	QRD161J-102	CARBON RESISTOR	1.0K 5% 1/6W	
R 751	QRD161J-102	CARBON RESISTOR	1.0K 5% 1/6W	
R 752	QRD161J-102	CARBON RESISTOR	1.0K 5% 1/6W	
R 753	QRD161J-102	CARBON RESISTOR	CD	
R 754	QRD161J-222	CARBON RESISTOR	PB70	
R 755	QRD161J-222	CARBON RESISTOR	SENSOR	
R 756	QRD161J-222	CARBON RESISTOR	RECB	
R 757	QRD161J-222	CARBON RESISTOR	RCR02	
R 758	QRD161J-222	CARBON RESISTOR	RECH	
R 759	QRD161J-472	CARBON RESISTOR	AC/DC	
R 760	QRD161J-103	CARBON RESISTOR	BUP	
R 761	QRD161J-222	CARBON RESISTOR	REM IN	
R 762	QRD161J-222	CARBON RESISTOR	REC	
R 763	QRD161J-104	CARBON RESISTOR	100K 5% 1/6W	
R 764	QRD161J-102	CARBON RESISTOR	DATA	

BLOCK NO. 03

REF.	PARTS NO.	PARTS NAME	REMARKS	SUFFIX
R 765	QRD161J-222	CARBON RESISTOR	CK	
R 768	QRD161J-474	CARBON RESISTOR	PUR	
R 769	QRD161J-103	CARBON RESISTOR	10K 5% 1/6W	
R 770	QRD161J-103	CARBON RESISTOR	10K 5% 1/6W	
R 771	QRD161J-103	CARBON RESISTOR	10K 5% 1/6W	
R 772	QRD161J-103	CARBON RESISTOR	10K 5% 1/6W	
R 773	QRD161J-104	CARBON RESISTOR	100K 5% 1/6W	
R 774	QRD161J-222	CARBON RESISTOR	PIN	
R 775	QRD161J-472	CARBON RESISTOR	STTU	
R 776	QRD161J-472	CARBON RESISTOR	STVOL	
R 777	QRD161J-472	CARBON RESISTOR	BIAS 2	
R 778	QRD161J-472	CARBON RESISTOR	BIAS 1	
R 780	QRD161J-102	CARBON RESISTOR	PBM	
R 781	QRD161J-223	CARBON RESISTOR	SMUTE	
R 782	QRD161J-472	CARBON RESISTOR	MT1	
R 783	QRD161J-472	CARBON RESISTOR	MTO	
R 784	QRD161J-472	CARBON RESISTOR	4.7K 5% 1/6W	
R 785	QRD161J-103	CARBON RESISTOR	MTO	
R 786	QRD161J-103	CARBON RESISTOR	MT1	
R 787	QRD161J-333	CARBON RESISTOR	LCDB	
R 789	QRD161J-104	CARBON RESISTOR	100K 5% 1/6W	
R 790	QRD161J-104	CARBON RESISTOR	100K 5% 1/6W	
R 791	QRD161J-104	CARBON RESISTOR	100K 5% 1/6W	
R 792	QRD161J-473	CARBON RESISTOR	AC/DC	
R 793	QRD161J-103	CARBON RESISTOR	AC/DC	
R 794	QRD161J-330	CARBON RESISTOR	33 5% 1/6W	
R 795	QRD161J-103	CARBON RESISTOR	10K 5% 1/6W	
R 796	QRD161J-104	CARBON RESISTOR	100K 5% 1/6W	
RA142	QRD161J-151	CARBON RESISTOR	150 5% 1/6W	
RA242	QRD161J-151	CARBON RESISTOR	150 5% 1/6W	
RM301	QRD161J-123	CARBON RESISTOR	12K 5% 1/6W	
RM302	QRD161J-472	CARBON RESISTOR	4.7K 5% 1/6W	
RM303	QRD161J-222	CARBON RESISTOR	2.2K 5% 1/6W	
RM304	QRD161J-334	CARBON RESISTOR	330K 5% 1/6W	
RM305	QRD161J-182	CARBON RESISTOR	1.8K 5% 1/6W	
RM306	QRD161J-561	CARBON RESISTOR	560 5% 1/6W	
RM307	QRD161J-475	CARBON RESISTOR	4.7M 5% 1/6W	
RM308	QRD161J-221	CARBON RESISTOR	220 5% 1/6W	
RM309	QRD161J-222	CARBON RESISTOR	2.2K 5% 1/6W	
RM310	QRD161J-103	CARBON RESISTOR	10K 5% 1/6W	
RM311	QRD161J-221	CARBON RESISTOR	220 5% 1/6W	
RM312	QRD161J-152	CARBON RESISTOR	1.5K 5% 1/6W	
RS301	QRD161J-102	CARBON RESISTOR	RUDDER	
RS302	QRD161J-102	CARBON RESISTOR	I	
RS303	QRD161J-122	CARBON RESISTOR	I	
RS304	QRD161J-152	CARBON RESISTOR	I	
RS305	QRD161J-222	CARBON RESISTOR	I	
RS306	QRD161J-272	CARBON RESISTOR	I	
RS307	QRD161J-392	CARBON RESISTOR	I	
RS308	QRD167J-562	CARBON RESISTOR	I	
RS309	QRD161J-103	CARBON RESISTOR	I	
RS310	QRD161J-183	CARBON RESISTOR	I	
RS311	QRD161J-473	CARBON RESISTOR	I	
RS312	QRD161J-102	CARBON RESISTOR	I	
RS313	QRD161J-102	CARBON RESISTOR	I	

BLOCK NO. 03

REF.	PARTS NO.	PARTS NAME	REMARKS	SUFFIX
RS314	QRD161J-122	CARBON RESISTOR	I	
RS315	QRD161J-152	CARBON RESISTOR	I	
RS316	QRD161J-222	CARBON RESISTOR	I	
RS317	QRD161J-272	CARBON RESISTOR	I	
RS318	QRD161J-392	CARBON RESISTOR	I	
RS319	QRD167J-562	CARBON RESISTOR	I	
RS320	QRD161J-103	CARBON RESISTOR	I	
RS321	QRD161J-183	CARBON RESISTOR	I	
RS322	QRD161J-473	CARBON RESISTOR	VERSION	
RS324	QRD161J-471	CARBON RESISTOR	P LED+B	
RS325	QRD161J-820	CARBON RESISTOR	COM +B	
RS326	QRD161J-820	CARBON RESISTOR	COM +B	
RS327	QRD161J-820	CARBON RESISTOR	COM +B	
RS329	QRD161J-391	CARBON RESISTOR	S.BASS	
RS330	QRD161J-391	CARBON RESISTOR	INFRARED	
RS331	QRD161J-221	CARBON RESISTOR	STBY KILL	
RS332	QRD161J-822	CARBON RESISTOR	8.2K 5% 1/6W	
RS333	QRD161J-272	CARBON RESISTOR	2.7K 5% 1/6W	
S 701	QSQ1A11-V04Z	TACT SWITCH	POWER	
S 702	QSQ1A11-V04Z	TACT SWITCH	VOL-	
S 703	QSQ1A11-V04Z	TACT SWITCH	VOL+	
S 704	QSQ1A11-V04Z	TACT SWITCH	TU-DOWN	
S 705	QSQ1A11-V04Z	TACT SWITCH	TU-UP	
S 706	QSQ1A11-V04Z	TACT SWITCH	AUX	
S 707	QSQ1A11-V04Z	TACT SWITCH	TUNER	
S 708	QSQ1A11-V04Z	TACT SWITCH	DISPLAY	
S 709	QSQ1A11-V04Z	TACT SWITCH	CLEAR	
S 710	QSQ1A11-V04Z	TACT SWITCH	POP	
S 711	QSQ1A11-V04Z	TACT SWITCH	BEAT	
S 712	QSQ1A11-V04Z	TACT SWITCH	SURROUND	
S 713	QSQ1A11-V04Z	TACT SWITCH	S.BASS	
S 714	QSQ1A11-V04Z	TACT SWITCH	PRESET	
S 715	QSQ1A11-V04Z	TACT SWITCH	EJECT	
S 716	QSQ1A11-V04Z	TACT SWITCH	REPEAT	
S 717	QSQ1A11-V04Z	TACT SWITCH	RANDOM	
S 718	QSQ1A11-V04Z	TACT SWITCH	B.SKIP	
S 719	QSQ1A11-V04Z	TACT SWITCH	F.SKIP	
S 720	QSQ1A11-V04Z	TACT SWITCH	PLAY	
S 721	QSQ1A11-V04Z	TACT SWITCH	STOP	
S 722	QSQ1A11-V04Z	TACT SWITCH	PB.POSI	
S 723	QSQ1A11-V04Z	TACT SWITCH	R/P.POSI	
VC701	VCR0020-002	C NETWORK	CD BUS	
VRM31	QVAA26B-V02	V RESISTOR	20KB	
X 701	M1ZCRHF4.19	CERA LOCK	MAIN	
X 702	VCX5000-002	CRYSTAL	SUB	

■ CD Amplifier P.C. Board

BLOCK NO. 04

⚠	REF.	PARTS NO.	PARTS NAME	REMARKS	SUFFIX
	C 501	QCBB1HK-821Y	C.CAPACITOR	820PF 10% 50V	
	C 503	QCVB1CN-103Y	C.CAPACITOR	.010MF 30% 16V	
	C 504	QET41CM-106	E.CAPACITOR	10MF 20% 16V	
	C 511	QCSB1HJ-3R9	C.CAPACITOR	3.9PF 10% 50V	
	C 512	QCS11HJ-270	C.CAPACITOR	27PF 5% 50V	
	C 513	QFN41HJ-104	M.CAPACITOR	.10MF 5% 50V	
	C 514	QFN41HJ-472	M.CAPACITOR	4700PF 5% 50V	
	C 521	QCBB1HK-331Y	C.CAPACITOR	330PF 10% 50V	
	C 522	QFN41HJ-473	M.CAPACITOR	.047MF 5% 50V	
	C 523	QFN41HJ-154	M.CAPACITOR	.15MF 5% 50V	
	C 524	QEPC1EM-475ZM	NP.E.CAPACITOR	4.7MF 20% 25V	
	C 529	QETC1AM-336ZN	E.CAPACITOR	33MF 20% 10V	
	C 531	QCVB1CM-822Y	C.CAPACITOR	8200PF 20% 16V	
	C 541	QCBB1HK-101Y	C.CAPACITOR	100PF 10% 50V	
	C 542	C1-PARTS838594	M.CAPACITOR	.010MF 5% 50V	
	C 543	QFN81HJ-393	M.CAPACITOR	.039MF 5% 50V	
	C 545	QEN61HM-105Z	NP.E.CAPACITOR	1.0MF 20% 50V	
	C 546	QFN81HJ-223	M.CAPACITOR	.022MF 5% 50V	
	C 561	QET41AM-476	E.CAPACITOR	47MF 20% 10V	
	C 562	QET41HM-475	E.CAPACITOR	4.7MF 20% 50V	
	C 581	QET41AM-477	E.CAPACITOR	470MF 20% 10V	
	C 582	QEK41CM-476	E.CAPACITOR	47MF 20% 16V	
	C 591	VCP0012-105Z	C.CAPACITOR		
	C 592	VCP0012-105Z	C.CAPACITOR		
	C 593	QCC11EM-104V	C.CAPACITOR	.10MF 20% 25V	
	C 599	QEK61AM-107ZM	E.CAPACITOR	100MF 20% 10V	
	C 601	QCS11HJ-220	C.CAPACITOR	FOR CRYSTAL	
	C 602	QCS11HJ-220	C.CAPACITOR	FOR CRYSTAL	
	C 603	QFV41HJ-104ZM	FILM CAPACITOR	.10MF 5% 50V	
	C 604	QCC11EM-104V	C.CAPACITOR	.10MF 20% 25V	
	C 605	QCVB1CN-103Y	C.CAPACITOR	.010MF 30% 16V	
	C 606	QCC11EM-473V	C.CAPACITOR	.047MF 20% 25V	
	C 607	QFV41HJ-104ZM	FILM CAPACITOR	.10MF 5% 50V	
	C 608	QCC11EM-473V	C.CAPACITOR	.047MF 20% 25V	
	C 609	QFV41HJ-104ZM	FILM CAPACITOR	.10MF 5% 50V	
	C 611	QCS11HJ-101	C.CAPACITOR	100PF 5% 50V	
	C 612	C1-PARTS838594	M.CAPACITOR	.010MF 5% 50V	
	C 613	C1-PARTS838594	M.CAPACITOR	.010MF 5% 50V	
	C 614	QFN41HJ-332	M.CAPACITOR	3300PF 5% 50V	
	C 615	QFN41HJ-332	M.CAPACITOR	3300PF 5% 50V	
	C 616	QCC11EM-103V	C.CAPACITOR	.010MF 20% 25V	
	C 631	QEK61AM-107ZM	E.CAPACITOR	100MF 20% 10V	
	C 632	QER40JM-107	E.CAPACITOR	100MF 20% 6.3V	
	C 651	QEK61AM-107ZM	E.CAPACITOR	100MF 20% 10V	
	C 652	QEK41CM-226	E.CAPACITOR	22MF 20% 16V	
	C 661	QCBB1HK-101Y	C.CAPACITOR	100PF 10% 50V	
	C 662	QCBB1HK-101Y	C.CAPACITOR	100PF 10% 50V	
	C 663	QCS11HJ-270	C.CAPACITOR	27PF 5% 50V	
	C 671	QCBB1HK-101Y	C.CAPACITOR	100PF 10% 50V	
	C 672	QCBB1HK-101Y	C.CAPACITOR	100PF 10% 50V	
	C 673	QCS11HJ-270	C.CAPACITOR	27PF 5% 50V	
	CN501	EMV7144-015R	15PIN CONNECTOR	TO PICK UP	
	CN502	VMC0075-006N	CONNECTOR		
	CN503	EMV7155-007	CONNECTOR		
	CN601	EMV7155-009	CONNECTOR	TO CPU	

BLOCK NO. 04

⚠	REF.	PARTS NO.	PARTS NAME	REMARKS	SUFFIX
	IC501	TA8191F	IC	SERVO LSI	
	IC502	BA6398FP	IC	POWER DRIVER	
	IC601	TC9284BF	IC	PROCESSER/DAC	
	IC604	BA15218N	IC	L.P.F	
	Q 501	2SA952(L,K)	TRANSISTOR		
	Q 581	2SA952(L,K)	TRANSISTOR	5V REGULATOR	
	Q 591	2SA1309(RS)	TRANSISTOR		
	R 501	QRD161J-124	CARBON RESISTOR	120K 5% 1/6W	
	R 502	QRD161J-103	CARBON RESISTOR	10K 5% 1/6W	
	R 504	QRD161J-202	CARBON RESISTOR	2.0K 5% 1/6W	
	R 505	QRD161J-100	CARBON RESISTOR	10 5% 1/6W	
	R 506	QRD161J-101	CARBON RESISTOR	100 5% 1/6W	
	R 507	QRD161J-120	CARBON RESISTOR	12 5% 1/6W	
	R 511	QRD161J-183	CARBON RESISTOR	18K 5% 1/6W	
	R 512	QRD161J-392	CARBON RESISTOR	3.9K 5% 1/6W	
	R 513	QRD167J-332	CARBON RESISTOR	3.3K 5% 1/6W	
	R 514	QRD161J-472	CARBON RESISTOR	4.7K 5% 1/6W	
	R 515	QRD161J-103	CARBON RESISTOR	10K 5% 1/6W	
	R 516	QRD161J-103	CARBON RESISTOR	10K 5% 1/6W	
	R 517	QRD161J-202	CARBON RESISTOR	2.0K 5% 1/6W	
	R 518	QRD161J-335YT	CARBON RESISTOR	3.3M 5% 1/6W	
	R 521	QRD161J-154	CARBON RESISTOR	150K 5% 1/6W	
	R 522	QRD161J-392	CARBON RESISTOR	3.9K 5% 1/6W	
	R 523	QRD161J-472	CARBON RESISTOR	4.7K 5% 1/6W	
	R 524	QRD161J-331	CARBON RESISTOE	330 5% 1/6W	
	R 525	QRD161J-472	CARBON RESISTOR	4.7K 5% 1/6W	
	R 529	QRD167J-562	CARBON RESISTOR	5.6K 5% 1/6W	
	R 531	QRD161J-473	CARBON RESISTOR	47K 5% 1/6W	
	R 532	QRD161J-104	CARBON RESISTOR	100K 5% 1/6W	
	R 533	QRD161J-153	CARBON RESISTOR	15K 5% 1/6W	
	R 541	QRD161J-123	CARBON RESISTOR	12K 5% 1/6W	
	R 542	QRD167J-332	CARBON RESISTOR	3.3K 5% 1/6W	
	R 543	QRD161J-473	CARBON RESISTOR	47K 5% 1/6W	
	R 544	QRD161J-223	CARBON RESISTOR	22K 5% 1/6W	
	R 545	QRD161J-103	CARBON RESISTOR	10K 5% 1/6W	
	R 548	QRD161J-153	CARBON RESISTOR	15K 5% 1/6W	
	R 549	QRD161J-821	CARBON RESISTOR	820 5% 1/6W	
	R 550	QRD161J-104	CARBON RESISTOR	100K 5% 1/6W	
	R 551	QRD161J-223	CARBON RESISTOR	22K 5% 1/6W	
	R 552	QRD167J-562	CARBON RESISTOR	5.6K 5% 1/6W	
	R 553	QRD161J-821	CARBON RESISTOR	820 5% 1/6W	
	R 555	QRD161J-392	CARBON RESISTOR	3.9K 5% 1/6W	
	R 559	QRD161J-125	CARBON RESISTOR	1.2M 5% 1/6W	
	R 561	QRD167J-562	CARBON RESISTOR	5.6K 5% 1/6W	
	R 562	QRD161J-102	CARBON RESISTOR	1.0K 5% 1/6W	
	R 563	QRD161J-152	CARBON RESISTOR	1.5K 5% 1/6W	
	R 564	QRD167J-332	CARBON RESISTOR	3.3K 5% 1/6W	
	R 565	QRD161J-683	CARBON RESISTOR	68K 5% 1/6W	
	R 566	QRD161J-273	CARBON RESISTOR	27K 5% 1/6W	
	R 583	QRD161J-101	CARBON RESISTOR	100 5% 1/6W	
	R 584	QRD161J-331	CARBON RESISTOE	330 5% 1/6W	
	R 591	QRD161J-473	CARBON RESISTOR	47K 5% 1/6W	
	R 611	QRD161J-102	CARBON RESISTOR	1.0K 5% 1/6W	
	R 612	QRD161J-103	CARBON RESISTOR	10K 5% 1/6W	
	R 613	QRD161J-224	CARBON RESISTOR	220K 5% 1/6W	

BLOCK NO. 04

⚠	REF.	PARTS NO.	PARTS NAME	REMARKS	SUFFIX
	R 614	QRD161J-473	CARBON RESISTOR	47K 5% 1/6W	
	R 615	QRD161J-225	CARBON RESISTOR	2.2M 5% 1/6W	
	R 616	QRD161J-333	CARBON RESISTOR	33K 5% 1/6W	
	R 651	QRD161J-820	CARBON RESISTOR	82 5% 1/6W	
	R 652	QRD161J-473	CARBON RESISTOR	47K 5% 1/6W	
	R 653	QRD161J-473	CARBON RESISTOR	47K 5% 1/6W	
	R 661	QRD161J-473	CARBON RESISTOR	47K 5% 1/6W	
	R 662	QRD161J-473	CARBON RESISTOR	47K 5% 1/6W	
	R 663	QRD161J-473	CARBON RESISTOR	47K 5% 1/6W	
	R 664	QRD161J-473	CARBON RESISTOR	47K 5% 1/6W	
	R 665	QRD161J-223	CARBON RESISTOR	22K 5% 1/6W	
	R 666	QRD161J-223	CARBON RESISTOR	22K 5% 1/6W	
	R 671	QRD161J-473	CARBON RESISTOR	47K 5% 1/6W	
	R 672	QRD161J-473	CARBON RESISTOR	47K 5% 1/6W	
	R 673	QRD161J-473	CARBON RESISTOR	47K 5% 1/6W	
	R 674	QRD161J-473	CARBON RESISTOR	47K 5% 1/6W	
	R 675	QRD161J-223	CARBON RESISTOR	22K 5% 1/6W	
	R 676	QRD161J-223	CARBON RESISTOR	22K 5% 1/6W	
	VR501	QVPA601-154A	V RESISTOR	TR OFFSET ADJ.	
	X 601	CSA16.93MXZ040T	CERA LOCK		

■ CD Tray motor Drive P.C. Board

BLOCK NO. 05

⚠	REF.	PARTS NO.	PARTS NAME	REMARKS	SUFFIX
	C 831	QEK61CM-107ZN	E.CAPACITOR	100MF 20% 16V	
	C 837	QEK40JM-227	E.CAPACITOR	220MF 20% 6.3V	
	C 838	QEK40JM-227	E.CAPACITOR	220MF 20% 6.3V	
	CN505	EMV7155-007	CONNECTOR	MICON/TRAY SW	
	D 812	1SR35-100	SI DIODE		
	IC802	BA6208A	IC		
	L 805	VQP0033-100Z	INDUCTOR	-S001(VQP0033-1	
	L 806	VQP0033-100Z	INDUCTOR	-S001(VQP0033-1	
	S 851	ESS1200-002	SWITCH		

14. Illustration of Packing and Parts List

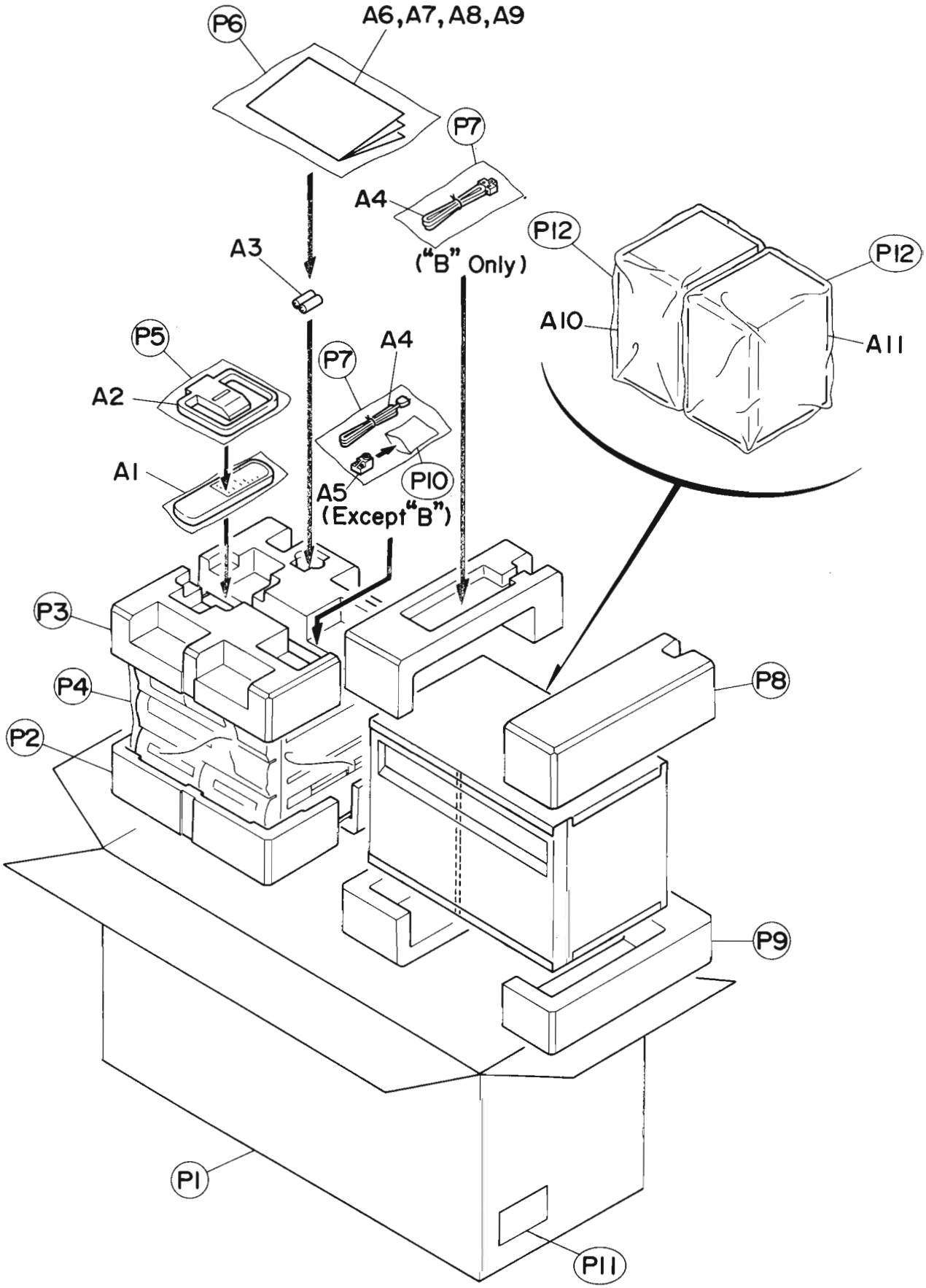

Fig. 14-1

■ Packing Parts List

BLOCK NO. M4MM

⚠	REF.	PARTS NO.	PARTS NAME	REMARKS	QTY	SUFFIX	CLR
	P 1	VPC9240-C004	CARTON		1		
	P 2	VPH1657-002	CUSHION(BOTTOM)		1		
	P 3	VPH1657-001	CUSHION(UPPER)		1		
	P 4	VPE3020-070	POLY BAG	FOR RECEIVER	1		
	P 5	VPE3005-042	POLY BAG	FOR AM ANT	1		
	P 6	VPE3005-007	POLY BAG	FOR INST/WARRAN	1		
	P 7	QPGA015-03503	POLY BAG	P.CORD	1		
		QPGA015-03503	POLY BAG	POWER CORD	1	B	
	P 8	VPH1661-001	CUSHION(UPPER)		1		
	P 9	VPH1661-002	CUSHION(BOTTOM)		1		
	P 10	QPGA007-01003	POLY BAG	FOR ADAPTOR	1		
	P 11	**********	COMPUTER LABEL		1		
	P 12	MIRRORBAG-SK015	MIRROR BAG	FOR SPEAKER	2		

■ Accessories

BLOCK NO. M5MM

⚠	REF.	PARTS NO.	PARTS NAME	REMARKS	QTY	SUFFIX	CLR
	A 1	VGR0036-101	REMOCON		1		
	A 2	EQB4001-015	AM LOOP ANT	FOR AM	1		
	A 3	UM-3(DJ)-2PSA	BATTERY	FOR REMOCON	1		
⚠	A 4	QMP5520-183BS	POWER CORD		1	B	
⚠		QMP39F0-183	POWER CORD		1		
	A 5	EMZ2001-014	ADAPTER		1		
	A 6	VNN9240-921C	INSTRUCTIONS		1	VX	
		VNN9240-271C	INSTRUCTIONS		1	EN	
		VNN9240-911C	INSTRUCTIONS		1	VX	
		VNN9240-261C	INSTRUCTIONS		1	E,EN,G	
		VNN9240-671	INSTRUCTIONS		1	B	
		VNN9240-251C	INSTRUCTIONS		1	E,GI	
	A 7	BT-20135	WARRANTY CARD		1	G	
	A 8	BT20060	WARRANTY CARD		1	B	
	A 9	BT-20066A	WARRANTY CARD		1	B,G	
	A 10	HXB5G-SPBOX-L	SPEAKER BOX(L)	FORMALIN	1	G,EN	
		HXB5K-SPBOX-L	SPEAKER BOX(L)		1		
	A 11	HXB5K-SPBOX-R	SPEAKER BOX(R)		1		
		HXB5G-SPBOX-R	SPEAKER BOX(R)	FORMALIN	1	G,EN	

JVC

VICTOR COMPANY OF JAPAN, LIMITED
AUDIO PRODUCTS DIVISION 10-1, 1-chome, Ohwatari-machi, Maebashi-city, Japan

(No.1923)

Printed in Japan
—H0703—O—