JVC

SERVICE MANUAL

CD PORTABLE SYSTEM

RC-QN1BK/WT
RC-QN2BK RC-QN3BK

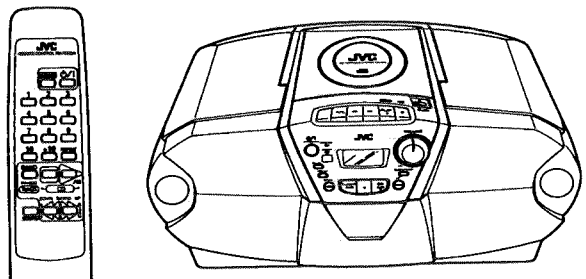

RC-QN1

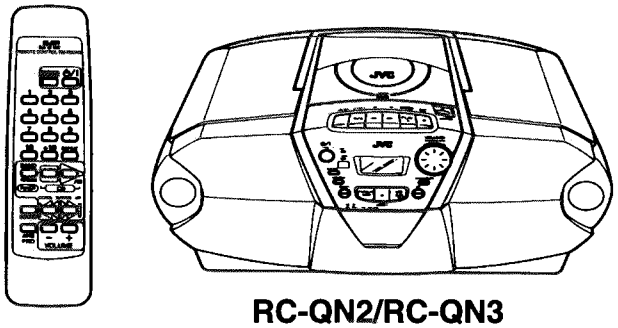

RC-QN2/RC-QN3

Area Suffix

B ..... U.K
E ..... Continental Europe
EE ..... Eastern Europe(ONLY RC-QN1)
EN ..... Northern Europe
J ..... U.S.A.
U ..... Other areas
US ..... Singapore
UX ..... Saudi Arabia
UY ..... Argentina

COMPACT disc DIGITAL AUDIO

Content

Safety Precaution 1-2
Instructions 1-8
Removalot Main Parts 2-1
Description of Main ICs 2-9
Main Adjustment 2-14
Block diagram 2-17
Standard Scematic Diagram 3-1
Location of P.C.Board 3-10
Parts List
RC-QN1 4-1
RC-QN2 5-1
RC-QN3 6-1

COPYRIGHT © 1998 VICTOR COMPANY OF JAPAN, LTD.

No.20697
Jun. 1998

Safety Precautions

1. This design of this product contains special hardware and many circuits and components specially for safety purposes. For continued protection, no changes should be made to the original design unless authorized in writing by the manufacturer. Replacement parts must be identical to those used in the original circuits. Services should be performed by qualified personnel only.
2. Alterations of the design or circuitry of the product should not be made. Any design alterations of the product should not be made. Any design alterations or additions will void the manufacturer's warranty and will further relieve the manufacture of responsibility for personal injury or property damage resulting therefrom.
3. Many electrical and mechanical parts in the products have special safety-related characteristics. These characteristics are often not evident from visual inspection nor can the protection afforded by them necessarily be obtained by using replacement components rated for higher voltage, wattage, etc. Replacement parts which have these special safety characteristics are identified in the Parts List of Service Manual. Electrical components having such features are identified by shading on the schematics and by (⚠) on the Parts List in the Service Manual. The use of a substitute replacement which does not have the same safety characteristics as the recommended replacement parts shown in the Parts List of Service Manual may create shock, fire, or other hazards.
4. The leads in the products are routed and dressed with ties, clamps, tubings, barriers and the like to be separated from live parts, high temperature parts, moving parts and/or sharp edges for the prevention of electric shock and fire hazard. When service is required, the original lead routing and dress should be observed, and it should be confirmed that they have been returned to normal, after re-assembling.
5. Leakage current check (Electrical shock hazard testing)
   After re-assembling the product, always perform an isolation check on the exposed metal parts of the product (antenna terminals, knobs, metal cabinet, screw heads, headphone jack, control shafts, etc.) to be sure the product is safe to operate without danger of electrical shock.
   Do not use a line isolation transformer during this check.
   - Plug the AC line cord directly into the AC outlet. Using a "Leakage Current Tester", measure the leakage current from each exposed metal parts of the cabinet , particularly any exposed metal part having a return path to the chassis, to a known good earth ground. Any leakage current must not exceed 0.5mA AC (r.m.s.)
   - Alternate check method
     Plug the AC line cord directly into the AC outlet. Use an AC voltmeter having, 1,000 ohms per volt or more sensitivity in the following manner. Connect a 1,500Ω 10W resistor paralleled by a 0.15μF AC-type capacitor between an exposed metal part and a known good earth ground.
     Measure the AC voltage across the resistor with the AC voltmeter.
     Move the resistor connection to each exposed metal part, particularly any exposed metal part having a return path to the chassis, and measure the AC voltage across the resistor. Now reverse the plug in the AC outlet and repeat each measurement voltage measured any must not exceed 0.75 V AC (r.m.s.). This corresponds to 0.5 mA AC (r.m.s.).

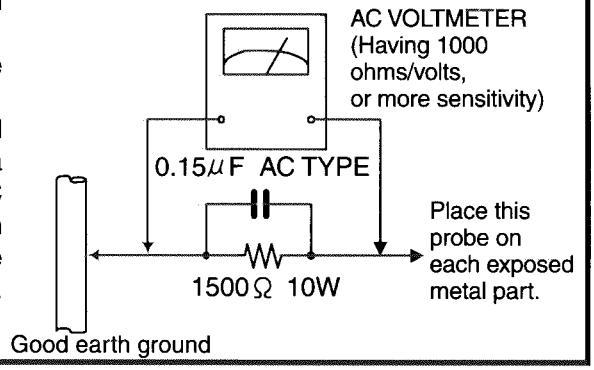

Warning

1. This equipment has been designed and manufactured to meet international safety standards.
2. It is the legal responsibility of the repairer to ensure that these safety standards are maintained.
3. Repairs must be made in accordance with the relevant safety standards.
4. It is essential that safety critical components are replaced by approved parts.
5. If mains voltage selector is provided, check setting for local voltage.

⚠ ***CAUTION*** **Burrs formed during molding may be left over on some parts of the chassis. Therefore, pay attention to such burrs in the case of preforming repair of this system.**

Safety Precautions (U.K only)

1. This design of this product contains special hardware and many circuits and components specially for safety purposes. For continued protection, no changes should be made to the original design unless authorized in writing by the manufacturer. Replacement parts must be identical to those used in the original circuits.
2. Any unauthorised design alterations or additions will void the manufacturer's guarantee ; furthermore the manufacturer cannot accept responsibility for personal injury or property damage resulting therefrom.
3. Essential safety critical components are identified by (⚠) on the Parts List and by shading on the schematics, and must never be replaced by parts other than those listed in the manual. Please note however that many electrical and mechanical parts in the product have special safety related characteristics. These characteristics are often not evident from visual inspection. Parts other than specified by the manufacturer may not have the same safety characteristics as the recommended replacement parts shown in the Parts List of the Service Manual and may create shock, fire, or other hazards.
4. The leads in the products are routed and dressed with ties, clamps, tubings, barriers and the like to be separated from live parts, high temperature parts, moving parts and/or sharp edges for the prevention of electric shock and fire hazard. When service is required, the original lead routing and dress should be observed, and it should be confirmed that they have been returned to normal, after re-assembling.

Warning

1. Service should be performed by qualified personnel only.
2. This equipment has been designed and manufactured to meet international safety standards.
3. It is the legal responsibility of the repairer to ensure that these safety standards are maintained.
4. Repairs must be made in accordance with the relevant safety standards.
5. It is essential that safety critical components are replaced by approved parts.
6. If mains voltage selector is provided, check setting for local voltage.

⚠ ***CAUTION*** **Burrs formed during molding may be left over on some parts of the chassis. Therefore, pay attention to such burrs in the case of preforming repair of this system.**

IMPORTANT FOR LASER PRODUCTS PRECAUTIONS (For U S A only)

1. CLASS 1 LASER PRODUCT
2. **DANGER:** Invisible laser radiation when open and interlock failed or defeated. Avoid direct exposure to beam.
3. **CAUTION:** Do not open the rear cover. There are no user serviceable parts inside the unit; leave all servicing to qualified service personnel.
4. **CAUTION:** The compact disc player uses invisible laser radiation and is equipped with safety switches which prevent the emission of radiation when the CD holder is open. It is dangerous to defeat the safety switches.
5. **CAUTION:** Use of controls for adjustments and the performance of procedures other than those specified herein may result in exposure to hazardous radiation.
6. **CAUTION:** The laser is able to function, if safety switches out of function. The laser light is invisible, avoid exposure, do not disassemble the laser unit, but replace the complete unit.

IMPORTANT FOR LASER PRODUCTS PRECAUTIONS (For E only)

1. CLASS 1 LASER PRODUCT
2. **DANGER:** Invisible laser radiation when open and interlock failed or defeated. Avoid direct exposure to beam.
3. **CAUTION:** Do not open the rear cover. There are no user serviceable parts inside the unit; leave all servicing to qualified service personnel.
4. **CAUTION:** The compact disc player uses invisible laser radiation and is equipped with safety switches which prevent the emission of radiation when the CD holder is open. It is dangerous to defeat the safety switches.
5. **CAUTION:** Use of controls for adjustments and the performance of procedures other than those specified herein may result in exposure to hazardous radiation.

IMPORTANT: Fuse replacement Marking Check

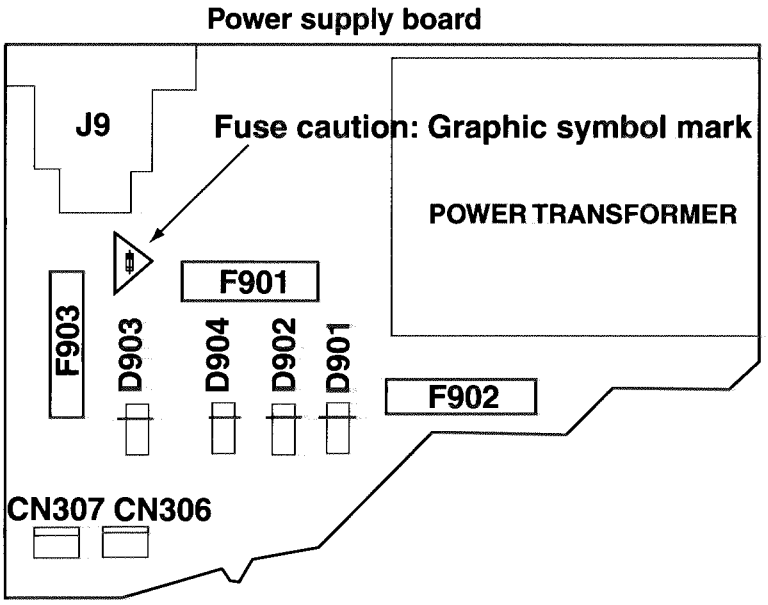

RC-QN1 J ONLY

Full Fusereplacement Marking

Graphic symbol mark (This symbol means fast blow type fuse.)

should be read as follows:

FUSE CAUTION

F902 : FOR CONTINUED PROTECTION

F903 : AGAINST RISK OF FIRE, REPLACE ONLY WITH SAME TYPE 3A 250V FUSE.

RC-QN1 J SEULEMENT

Marquage Pour Le Remplacement Complet De Fusible

Le symbole graphique (Ce symbole signifie fusible de type á fusion rapide.)

doit être interprété comme suit:

PRECAUTIONS SUR LES FUSIBLES

F902: POUR UNE PROTECTION CONTINUE

F903 :CONTRE DES RISQUES D'INCENDIE, REMPLACER SEULEMENT PAR UN FUSIBLE DU MEME TYPE 3A 250V.

IMPORTANT FOR LASER PRODUCTS PRECAUTIONS (For U S A only)

1. CLASS 1 LASER PRODUCT
2. **DANGER:** Invisible laser radiation when open and interlock failed or defeated. Avoid direct exposure to beam.
3. **CAUTION:** Do not open the rear cover. There are no user serviceable parts inside the unit; leave all servicing to qualified service personnel.
4. **CAUTION:** The compact disc player uses invisible laser radiation and is equipped with safety switches which prevent the emission of radiation when the CD holder is open. It is dangerous to defeat the safety switches.
5. **CAUTION:** Use of controls for adjustments and the performance of procedures other than those specified herein may result in exposure to hazardous radiation.
6. **CAUTION:** The laser is able to function, if safety switches out of function. The laser light is invisible, avoid exposure, do not disassemble the laser unit, but replace the complete unit.

IMPORTANT FOR LASER PRODUCTS PRECAUTIONS (For E only)

1. CLASS 1 LASER PRODUCT
2. **DANGER:** Invisible laser radiation when open and interlock failed or defeated. Avoid direct exposure to beam.
3. **CAUTION:** Do not open the rear cover. There are no user serviceable parts inside the unit; leave all servicing to qualified service personnel.
4. **CAUTION:** The compact disc player uses invisible laser radiation and is equipped with safety switches which prevent the emission of radiation when the CD holder is open. It is dangerous to defeat the safety switches.
5. **CAUTION:** Use of controls for adjustments and the performance of procedures other than those specified herein may result in exposure to hazardous radiation.

IMPORTANT: Fuse replacement Marking Check

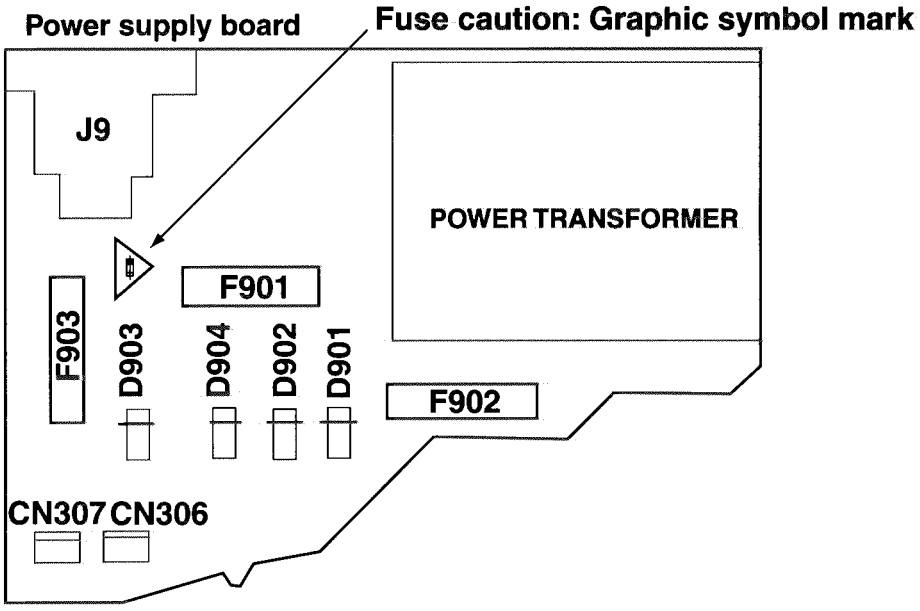

RC-QN2 J ONLY

Full Fusereplacement Marking

Graphic symbol mark (This symbol means fast blow type fuse.)

should be read as follows:

FUSE CAUTION

F902: FOR CONTINUED PROTECTION
F903 : AGAINST RISK OF FIRE, REPLACE ONLY WITH SAME TYPE 3A 250V FUSE.

RC-QN2 J SEULEMENT

Marquage Pour Le Remplacement Complet De Fusible

Le symbole graphique (Ce symbole signifie fusible de type à fusion rapide.)

doit être interprété comme suit:

PRECAUTIONS SUR LES FUSIBLES

F902: POUR UNE PROTECTION CONTINUE
F903 :CONTRE DES RISQUES D'INCENDIE, REMPLACER SEULEMENT PAR UN FUSIBLE DU MEME TYPE 3A 250V.

IMPORTANT FOR LASER PRODUCTS PRECAUTIONS (For J only)

1. CLASS 1 LASER PRODUCT
2. **DANGER:** Invisible laser radiation when open and interlock failed or defeated. Avoid direct exposure to beam.
3. **CAUTION:** Do not open the rear cover. There are no user serviceable parts inside the unit; leave all servicing to qualified service personnel.
4. **CAUTION:** The compact disc player uses invisible laser radiation and is equipped with safety switches which prevent the emission of radiation when the CD holder is open. It is dangerous to defeat the safety switches.
5. **CAUTION:** Use of controls for adjustments and the performance of procedures other than those specified herein may result in exposure to hazardous radiation.
6. **CAUTION:** The laser is able to function, if safety switches out of function. The laser light is invisible, avoid exposure, do not disassemble the laser unit, but replace the complete unit.

IMPORTANT FOR LASER PRODUCTS PRECAUTIONS (For E only)

1. CLASS 1 LASER PRODUCT
2. **DANGER:** Invisible laser radiation when open and interlock failed or defeated. Avoid direct exposure to beam.
3. **CAUTION:** Do not open the rear cover. There are no user serviceable parts inside the unit; leave all servicing to qualified service personnel.
4. **CAUTION:** The compact disc player uses invisible laser radiation and is equipped with safety switches which prevent the emission of radiation when the CD holder is open. It is dangerous to defeat the safety switches.
5. **CAUTION:** Use of controls for adjustments and the performance of procedures other than those specified herein may result in exposure to hazardous radiation.

IMPORTANT: Fuse replacement Marking Check

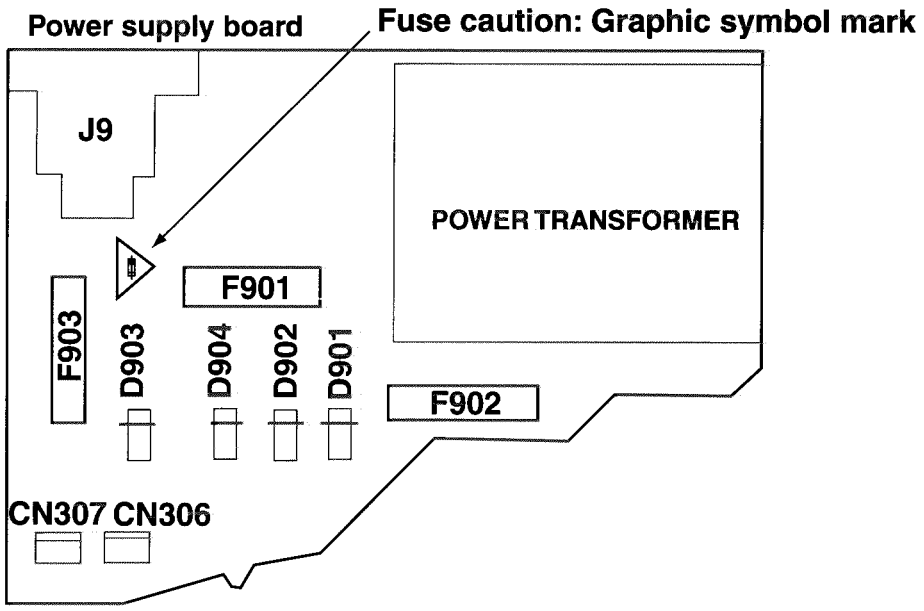

RC-QN3BK J ONLY

Full Fusereplacement Marking

Graphic symbol mark (This symbol means fast blow type fuse.)

should be read as follows:

FUSE CAUTION

F902 : FOR CONTINUED PROTECTION

F903 : AGAINST RISK OF FIRE, REPLACE ONLY WITH SAME TYPE 3A 250V FUSE.

RC-QN3BK J SEULEMENT

Marquage Pour Le Remplacement Complet De Fusible

Le symbole graphique (Ce symbole signifie fusible de type à fusion rapide.)

doit être interprété comme suit:

PRECAUTIONS SUR LES FUSIBLES

F902: POUR UNE PROTECTION CONTINUE

F903 :CONTRE DES RISQUES D'INCENDIE, REMPLACER SEULEMENT PAR UN FUSIBLE DU MEME TYPE 3A 250V.

Important for Laser Products

1.CLASS 1 LASER PRODUCT

2.DANGER : Invisible laser radiation when open and inter lock failed or defeated. Avoid direct exposure to beam.

3.CAUTION : There are no serviceable parts inside the Laser Unit. Do not disassemble the Laser Unit. Replace the complete Laser Unit if it malfunctions.

4.CAUTION : The compact disc player uses invisible laserradiation and is equipped with safety switches whichprevent emission of radiation when the drawer is open and the safety interlocks have failed or are de feated. It is dangerous to defeat the safety switches.

5.CAUTION : If safety switches malfunction, the laser is able to function.

6.CAUTION : Use of controls, adjustments or performance of procedures other than those specified herein may result in hazardous radiation exposure.

⚠ ***CAUTION*** **Please use enough caution not to see the beam directly or touch it in case of an adjustment or operation check.**

VARNING : Osynlig laserstråOlning änr denna del ä r ö ppnad och spåcrren ärr urkopplad. Betrakta ej strå len.

VARO : Avattaessa ja suojalukitus ohitettaessa olet alttiina nälkymäyttötmätlle lasersälteilylle.Äläe katso säkteeseen.

ADVARSEL : Usynlig laserstråsling ved åibning , nånr sikkerhedsafbrydere er ude af funktion. Undgåi udsædttelse for stråtling.

ADVARSEL : Usynlig laserstråsling ved åipning,nånr sikkerhetsbryteren er avslott. unngåi utsettelse for stråoling.

REPRODUCTION AND POSITION OF LABELS

WARNING LABEL

(Exceptforthe U.S.A)

VARO : Avattaessa ja suojalukitus ohitettaessa olet alttiina nähkymäyttö mätlle lasersälteilylle.Äläe katso säa teeseen. (d)

ADVARSEL :Usynlig laserstråDling ved åebning , nånr sikkerhedsafbrydere er ude af funktion. Undgåu udsæuttelse for stråt ling. (f)

DANGER : Invisibie laser radiation when open and interlock or defeated.
AVOID DIRECT EXPOSURE TO BEAM (e)

VARNING : Osynlig laserstråAlning änr denna del äer ö ppnad och spåprren ärr urkopplad. Betrakta ej stråulen. (s)

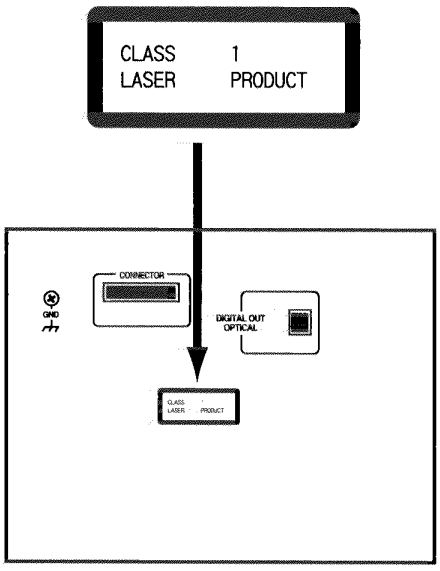

RX-TD5 Rear Panel

RC-QN1/QN2/QN3

Instructions for RC-QN1

English

Thank you for purchasing the JVC CD Portable System.
We hope it will be a valued addition to your home as well as to your outdoor life, giving you years of enjoyment.
Be sure to read this instruction manual carefully before operating your new stereo system.
In it you will find all the information you need to set up and use the system.
If you have a query that is not answered by the manual, please contact your dealer.

Features

Here are some of the things that make your System both powerful and simple to use.

- The controls and operations have been redesigned to make them very easy to use, freeing you to just enjoy the music.
  - With JVC's **COMPU PLAY** you can turn on the System and automatically start the Radio, CD Player, or Cassette Deck with a single touch. (When power is supplied from AC)

- Sound effects; BEAT, POP, and CLEAR.
- A 30-station preset capability (15 FM and 15 AM) in addition to auto-seek and manual tuning.
- A user-friendly timer lets you fall asleep to music.

How This Manual Is Organized

- Basic information that is the same for many different functions - e.g. setting the volume - is given in the section 'Common Operations', and not repeated under each function.
- The names of buttons/controls are written in all capital letters: e.g. TUNER BAND.
- System functions are written with an initial capital letter only: e.g. Normal Play.

Use the table of contents to look up specific information you require.
We've enjoyed making this manual for you, and hope it serves you in enjoying the many features built into your System.

IMPORTANT CAUTIONS

When carrying the Unit

- Do not raise or lower the carrying handle of the Unit with the telescopic antenna extended in order to avoid damaging the antenna.

Where to place the Unit

- Select a place which is level, dry and neither too hot nor too cold (between 5°C/41°F and 35°C/95°F).
- Leave sufficient distance between the Unit and a TV.
- Do not use the Unit in a place subject to vibrations.

Power cord

- Do not handle the power cord with wet hands!
- Some power (2.6 W) is always consumed as long as the power cord is connected to the wall outlet.
- When unplugging the Unit from the wall outlet, always pull the plug, not the power cord.

Malfunctions, etc.

- There are no user serviceable parts inside. In case of system failure, unplug the power cord and consult your dealer.
- Do not insert any metallic object into the System.

Table of Contents

Features 1
How This Manual Is Organized 1
IMPORTANT CAUTIONS 1

Getting Started 2

Common Operations 4

Using the Tuner 5

Using the CD Player 6

Using the Cassette Deck (Listening to a Tape) 7

Using the Cassette Deck (Recording) 8

Using the Sleep Timer 9

Using the Microphones 9

Care And Maintenance 10

Troubleshooting 11

Specifications 11

English

Common Operations

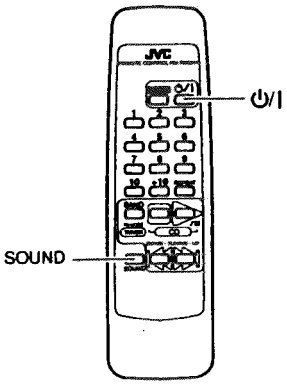

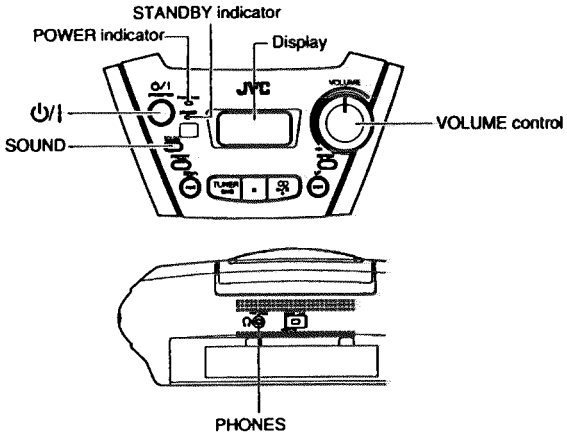

Turning the Power On and Standby

Turning the Unit On

Press the ⏻/I button.

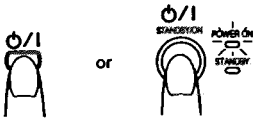

The POWER ON indicator (green) lights up and the display comes on.

The Unit comes on ready to continue in the mode it was in when the power was last turned off.

- For example, if the last thing you were doing was listening to a CD, you are now ready to listen to a CD again. If you wish, you can change to another source.
- If you were listening to the Tuner last, the Tuner comes on playing the station it was last set to.

Note: When power is supplied from the batteries, the ⏻/I button on the Remote Control does not work.

Turning the Unit Standby

Press the ⏻/I button again.

When operating on AC power:

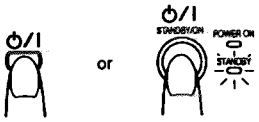

The STANDBY indicator lights up and the display is blank.

- When in Standby mode, the Unit continues to a small amount of power (2.6 W) to run the display.
- To switch off the Unit completely, unplug the AC power cord from the AC outlet.

When power is supplied from the batteries:

When the Unit is turned off with the ⏻/I button on the Unit (the ⏻/I button on the Remote Control is ineffective), the Standby indicator goes out and the display is blank.

To switch off the Unit completely, remove the batteries from the Unit.

Adjusting the Volume

Turn the VOLUME control on the Unit to the right or left to increase or decrease the volume level.

CAUTION: DO NOT turn on the Unit and/or start playing any source without first setting the VOLUME control to 0, as a sudden blast of sound can damage your hearing, speakers and/or headphones.

For private listening

Connect a pair of headphones to the PHONES jack. No sound comes out of the speakers.

Be sure to turn down the volume before connecting or putting on headphones.

Sound Effects (SOUND)

The System has the following preset sound effects that give you control over the way your music sounds, so you can tailor it to the acoustics of your room and the quality of your source. Test the sound effects out to hear how each affects the music. Note that the effects work only during playback.

Sound effects

FLAT: No sound effect.
BEAT: Boosts low and high frequencies.
POP: Good for vocal music.
CLEAR: For a wide, dynamic stereo sound.

To get an effect, press the SOUND button repeatedly until the Sound mode you want appears on the display.

Each time you press the SOUND button, the display changes as shown below:

BASS BASS
BEAT → POP → CLEAR → FLAT

To cancel the effect, press the SOUND button until "FLAT" appears on the display

Using the Tuner

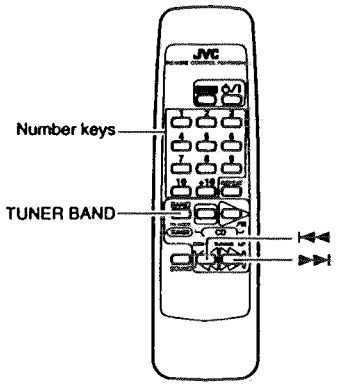

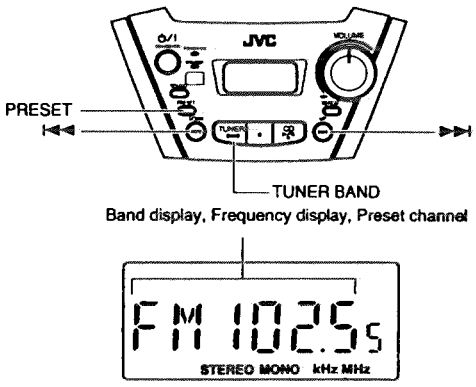

(Display when using the Tuner)

You can listen to FM and AM stations. Stations can be tuned in manually, automatically, or from preset memory storage.

One Touch Radio (AC power only)—

Just press the TUNER BAND button to turn on the Unit and start playing the station you were last tuned to.

■ You can also switch from any other sound source to the radio by pressing the TUNER BAND button.

Tune in a Station

1 Press the TUNER BAND button.

The Band and Frequency you were last tuned to appear on the display.

Each time you press the button, the band changes as follows:

FM Auto → FM MONO → AM →

2 Select a station using one of the following methods.

■ **Manual Tuning**

Press the ⏮ or ⏭ button repeatedly to move from frequency to frequency until you find the station you want.

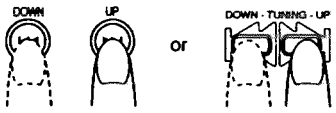

OR

■ **Auto Tuning**

If you press and hold the ⏮ or ⏭ button for one second or more, the frequency changes down, or up, automatically until a station is found.

OR

■ **Preset Tuning using the Unit (Possible only after presetting stations)**

Press the PRESET button to select the preset station.

After you have selected the preset number, the band and the frequency are displayed.

Example:Press the PRESET button until the preset number 12 "P- 12" appears.

P- 12 → FM 103.5

OR

■ **Preset Tuning using the Remote Control (Possible only after presetting stations)**

Select the station by entering its preset number on the number keys.

- Example:For channel 5, press 5. For channel 15, press +10 then 5.
- The band and the frequency are displayed.

3 Turn the antenna for best reception.

- For FM broadcast, extend and turn the telescopic antenna.
- For AM broadcast, turn the Unit itself.

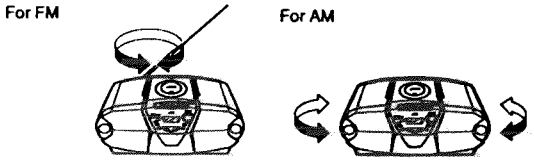

Presetting Stations

You can preset up to 15 FM stations and up to 15 AM stations into memory using the Remote Control.

Auto Presetting (Using the Unit) ——

In each band, you can automatically preset FM-15, AM-15 stations. Preset numbers will be allocated as stations are found, starting from the station currently tuned to and moving up the frequency.

1 Select a band (AM or FM) by pressing the TUNER BAND button.

2 Press the PRESET button for more than two seconds.

3 Repeat steps 1-2 for the other band.

■ If you want to change any of the auto preset stations, follow the procedure for Manual Presetting.

CAUTION: If the Unit is unplugged or if a power failure occurs, the preset stations will be erased after approx. five minutes. If this happens, you will need to preset the stations again.

Manual Presetting (Using the Remote Control) ——

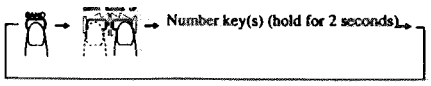

1 Select a band by pressing the TUNER BAND button.

2 Press the ⏮ or ⏭ button to tune in a station.

3 Set the preset number by pressing and holding the number key on the Remote Control.

English

- To preset numbers 1 to 10: Press the number key and hold down for 2 seconds.
- To preset numbers 11 to 15: Press and release the +10 button, then press the second number key (1 to 5) and hold down for 2 seconds.

When the preset display blinks, the setting is stored and you can release the number key. The display returns to the normal band and frequency display.
Example: Preset number = 12

P- 1 2 → FM 103.5

Repeat steps 1 - 3 for each station.

To change the preset stations, repeat the same steps as above.

To Change the FM Reception Mode

The "STEREO" indicator lights up and you can hear stereo effects, when a program is broadcast in stereo.
However if an FM stereo broadcast is hard to receive or noisy, you can select Monaural mode. Reception improves, but you lose any stereo effect.

Press the TUNER BAND button to select FM MONO mode.

The "MONO" indicator lights up on the display.

To restore the stereo effect, press the TUNER BAND button to select FM Auto mode. The "MONO" indicator goes out.

Using the CD Player

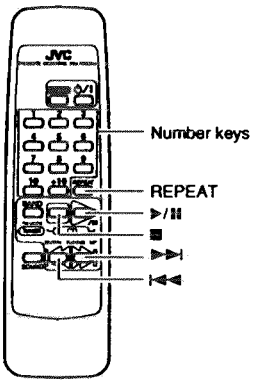

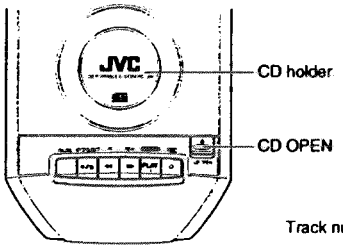

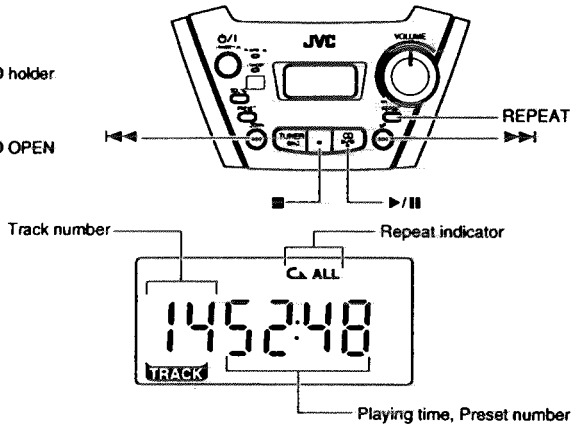

(Display when using the CD Player)

You can use Normal or Repeat Play. Repeat Play can be set to repeat all or just one of the tracks on the CD.

One Touch CD Player (AC power only)

■ Just press the CD ▶/II button.

- The power is automatically turned on. If a CD is already inserted, "PLAY" is displayed and the CD will start playing from the first track.
- If no CD is inserted, "NO DISC" is displayed on the display and the CD Player remains in Stop mode.

Normal Play

1 Press the CD OPEN button on the Unit.

The CD holder opens.

2 Place a CD, with its label side up.

3 Gently close the CD holder by hand.

4 Press the CD ▶/II button.

The first track of the CD begins playing.
The CD Player automatically stops when the last track of the CD has finished playing.

- During playback, the track number being played and the playback time elapsed are shown on the display.

To stop playing the CD, press the ■ button.

The following information for the CD is displayed.

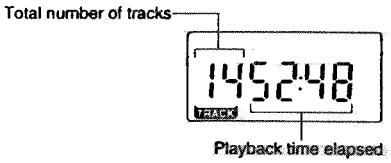

To pause, press the CD ▶/II.
To cancel pause, press the CD ▶/II again. Play continues from the point where it was paused.

Notes:

- You can place an 8 cm (3") CD without an adaptor.
- If the CD cannot be read correctly (because it is scratched, for example), "000000" appears on the display.
- Even if other function is selected during playing the CD, the last track is memorized.

Skip Play (I◀◀ or ▶▶I)

During playback, press the I◀◀ or ▶▶I button to select the track you want.

The selected track starts playing.

- Press and release the ▶▶I button to go forward one track at a time.
- Press and release the I◀◀ button to go back one track at a time.

Search Play

During playback, hold down the I◀◀ or ▶▶I button.

This operation will fast forward/backwards the CD so you can quickly find a particular passage in the track you are listening to (the CD is played slowly for a moment and then the playback speed increases).

Locating a Track directly with the Remote Control

Using the number keys on the Remote Control allows you can go directly to the beginning of any track.

During playback, enter the number of the track you want to listen to using the number keys.

The selected track starts playing.

- Example: For track 5, press 5. For track 15, press +10 then 5. For track 20, press +10, then 10. For track 32, press +10 three times, then 2.

Repeat Play

You can repeat one track or all the tracks on a CD.

During, or before playback, press the REPEAT button on the Remote Control to select the Repeat mode.

The Repeat indicator changes with each press of the button, as shown below.

⊂ → ⊂ ALL → blank display → (back to the beginning)

⊂ : Repeats one track.
⊂ ALL : Repeats all the tracks.

To exit Repeat mode, press the REPEAT button until the Repeat indicator on the display goes out.

Using the Cassette Deck (Listening to a Tape)

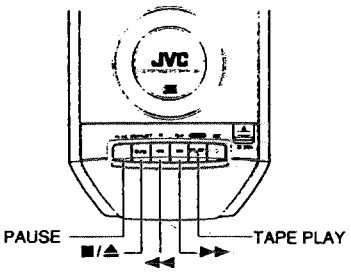

(Display when using the Cassette Deck)

The Cassette Deck allows you to play and record audio tapes

Notes:

- The Cassette Deck performs best with normal tapes (metal or CrO_2 tapes are not recommended).
- The use of tapes longer than 120 minutes is not recommended, since characteristic deterioration may occur and these tapes easily jam in the pinch-roller and the capstan.

One Touch Play (AC power only)

Just press the TAPE PLAY button on the Unit. The power is automatically turned on, "TAPE" is displayed, and if a tape is already in the deck, it will start to play.

Playback

Press the ■/▲ STOP/EJECT button to open the cassette holder.

Insert a cassette tape with the exposed side facing upward as shown below.

← Forward direction

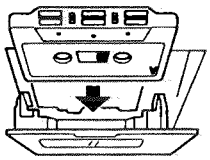

Close the holder gently until it clicks.

Press the TAPE PLAY button.

- The tape is played and then stops when it reaches the end.

To pause, press the PAUSE button on the Unit.

To cancel pause, press the PAUSE button again. Play continues from the point where it was paused.

To stop playing, press the ■/▲ STOP/EJECT button.

To remove the tape, stop the tape, and press the ■/▲ STOP/EJECT button again.

To fast-forward and rewind a tape

Press the ◀◀ (fast-forward) button on the Unit to fast-forward the tape.

Press the ▶▶ (rewind) button on the Unit to rewind the tape.

- The Cassette Deck automatically stops when the tape reaches its end.

English

Using the Cassette Deck (Recording)

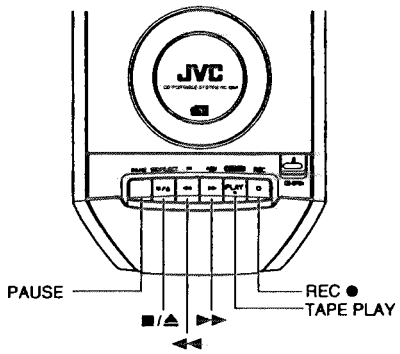

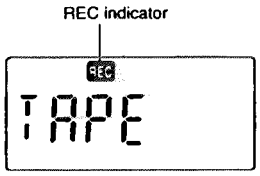

(Display when using the Cassette Deck)

Things To Know Before You Start Recording

- **It may be unlawful to record or playback copyrighted material without the consent of the copyright owner.**
- The correct recording level is automatically set by the ALC (Automatic Level Control) function, and is not affected by the VOLUME control on the Unit or by the use of sound effects.
- Two small tabs on the back of the cassette tape, one for side A and one for side B, can be removed to prevent accidental erasure or recording.
- To record on a cassette with the tabs removed, you must cover the holes with adhesive tape as shown.

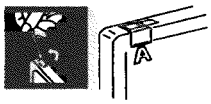

Notes:

- Use normal tapes (not metal or CrO_2 tapes) for recording.
- At the start and end of cassette tapes, there is leader tape which cannot be recorded onto.
- If a recorded tape you make has excessive noise or static, the Unit may have been too close to a TV during the recording. Either turn off the TV or increase the distance between the TV and the Unit.

Recording from the Radio

1 Press the ■/▲ STOP/EJECT button to open the cassette holder.

2 Insert a blank or erasable cassette tape with the exposed side facing upward as shown below and wind past the leader tape.

← Forward direction

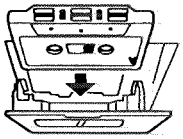

3 Close the holder gently until it clicks.

4 Tune in to a radio station.

5 Press the ● REC button on the Unit.

The PLAY button is pressed at the same time, the "REC" indicator lights up, and the Unit begins recording.

- The tape is recorded and then stops when it reaches the end.

To pause the recording, press the PAUSE button on the Unit.
To cancel pause, press the PAUSE button again. Recording continues from the point where it was paused.
To stop recording, press the ■/▲ STOP/EJECT button.
To remove the tape, stop the tape, and press the ■/▲ STOP/EJECT button again to open the cassette holder.

Recording an AM station (BEAT CUT)

When recording an AM broadcast, beats may be produced which are not heard when listening to the broadcast. If this happens, you can use the BEAT CUT function.

Switch the BEAT CUT switch on the back of the Unit from the NORM-1 to 2 or 3.

Note: In regular use, the BEAT CUT switch should be set to the NORM-1 position.

Recording from the CD

The CD Player can be started with the Cassette Deck for synchronous recording and everything on the CD recorded onto the tape in the order it is on the CD.

1 Insert a cassette tape in the Cassette Deck and wind past the leader tape.

2 Load a CD.

3 Press the CD ▶/II button.

4 Press the ■ button to stop the CD.

- You can check the number of tracks and the total playback time of the CD on the display. (See page 6.)

5 Select the Repeat mode of the CD if desired.

To select the Repeat mode (⊂ or ⊂ ALL), press the REPEAT button on the Remote Control.

6 Choose whether to have approx. four seconds of blank tape between tracks.

If you want the blank section, skip this step.
If you do not want the blank section, perform the following operation on the CD Player.

- Press the CD ▶/II button twice.

7 Press the ● REC button on the Unit.

The PLAY button is pressed at the same time, the "REC" indicator lights up, and the synchronous recording begins.

- The tape is recorded and then stops when it reaches the end.
- To continue recording to the other side of the tape, perform the following steps.

1. Reverse the cassette tape and wind past the leader tape.
2. Press the CD ▶/II button and then press the ● REC button.

Then, the synchronous recording begins from the beginning of the last track that was stopped at the end of the first side of the tape.

To stop recording, press the ■/▲ STOP/EJECT button.

To remove the tape, stop the tape, and press the ■/▲ STOP/EJECT button again to open the cassette holder.

Notes:

- If the CD reaches its end before the tape, the tape will continue to run until stopped. Press ■/▲ STOP/EJECT button to stop the tape.
- During synchronous recording, the CD ▶/II, |◀◀, and ▶▶| buttons for the CD Player do not function.
- If you press the ● REC button during play the CD, recording will start from the beginning of the track being played.

Using the Sleep Timer

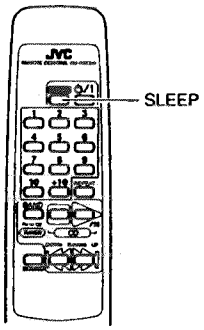

Use the Sleep Timer to turn the Unit off after a certain number of minutes when it is playing. By setting the Sleep Timer, you can fall asleep to music and know that your Unit will turn off by itself rather than play all night.

■ You can only set the Sleep Timer when the Unit is on and a source is playing.

1 Play back a CD, tune in to a desired station, or play back a tape.

2 Press the SLEEP button on the Remote Control.

The "SLEEP" indicator lights up.

3 Set the length of time you want the source to play before shutting off.

- Each time you press the SLEEP button, it changes the number of minutes shown on the display in this sequence:

→ **30** → **60** → **90** → **120** → **Cancelled** → (back to the beginning)

The display will stop blinking after 5 seconds and return to the display before you set the Sleep Timer.

The Unit is now set to turn off after the number of minutes you have set.

To Confirm the Sleep Time

When the SLEEP button is pressed, the remaining sleep time is displayed. After 5 seconds the original display returns.

To Cancel the SLEEP Timer Setting

Press the SLEEP button until the "SLEEP" indicator goes off on the display.

Turning off the Unit also cancels the SLEEP Timer.

Using the Microphones

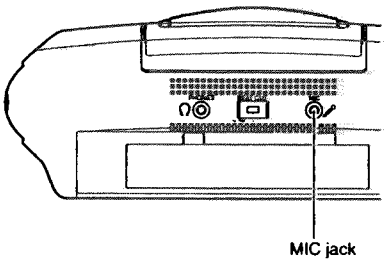

Microphone Mixing

Using a microphone (not supplied), you can mix the microphone sound with a source sound.

1 Connect a microphone by plugging it into the MIC jack on the back of the Unit.

2 Start a source; CD, tape, or tuner.

3 Adjust the volume level, as you sing into the microphone.

Playing the Microphone Sound through the Speakers

1 Connect a microphone by plugging it into the MIC jack on the back of the Unit.

2 Adjust the volume level, as you sing into the microphone.

Note: If "howling" occurs, keep the microphone away from the Unit.

English

Recording Microphone Mixing on a Tape

Connect a microphone by plugging it into the MIC jack on the back of the Unit.

Adjust the volume level, as you sing into the microphone.

To record, follow the steps in "Recording from the Radio" or "Recording from the CD" according to the source you want to mix. (See pages 8 and 9.)

Note: If "howling" occurs, keep the microphone away from the Unit.

Recording from a Microphone on a Tape

Connect a microphone by plugging it into the MIC jack on the back of the Unit.

Adjust the volume level, as you sing into the microphone.

To record, refer to "Recording from Radio" except for tuning in to a radio station. (See page 8.)

Note: If "howling" occurs, keep the microphone away from the Unit.

Care And Maintenance

Handle your CDs carefully, and they will last a long time.

Compact Discs

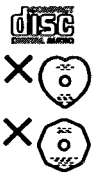

- Only CDs bearing this mark can be used with this Unit.
- Continued use of irregularly shaped CDs (heart-shape, octagonal, etc.) can damage the Unit.

- Remove the CD from its case by holding it at the edges while pressing the case's center hole lightly.
- Do not touch the shiny surface of the CD, or bend the CD.

- Put the CD back in its case after use to prevent warping.
- Be careful not to scratch the surface of the CD when placing it back in the case.
- Avoid exposure to direct sunlight, temperature extremes, and moisture.

- A dirty CD may not play correctly. If a CD is dirty, wipe it with a soft cloth in a straight line from center to edge.

CAUTION: Do not use any solvent (for example, conventional record cleaner, spray thinner, benzine, etc.) to clean a CD.

Moisture Condensation

Moisture may condense on the lens inside the Unit in the following cases:

- After turning on heating in the room.
- In a damp room.
- If the Unit is brought directly from a cold to a warm place.

Should this occur, the Unit may malfunction. If this happens, leave it turned on for a few hours until the moisture evaporates, unplug the AC power cord, and then plug it in again.

General Notes

To ensure top performance, keep your CDs and the mechanism clean.

- Store CDs in their cases, and keep them in cabinets or on shelves.
- Keep the CD holder closed when not in use.

Cassette Tapes

- If a tape is loose, it may get stretched, cut, or caught in the cassette. Take up the slack by inserting a pencil in one of the reels and rotating in the right direction.

- Do not touch the tape surface.

- Do not store the tape:
  - In dusty places
  - In direct sunlight or heat
  - In damp areas
  - On a TV or speaker
  - Near a magnet

Cassette Deck

- If the heads, capstan, or pinch-roller in the Cassette Deck become dirty, you may experience:
  - Loss of sound quality
  - Discontinuous sound
  - Fading
  - Incomplete erasure
  - Difficulty recording
- Clean the heads, capstans, and pinch-rollers using a cotton swab moistened with alcohol.

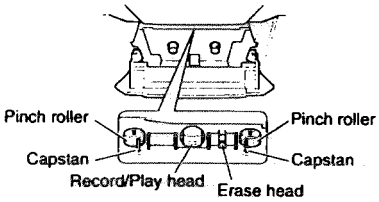

- If the heads become magnetized, the Unit will produce noise or lose high frequency notes.
- To demagnetize the heads, turn off the Unit, and use a head demagnetizer (available at electronics and record shops).

Troubleshooting

- If you have a problem with your System, check this list for a possible solution before calling for service.
- If you cannot solve the problem from the hints given here, or the System has been physically damaged, call a qualified person, such as your dealer, for service.

Symptom	Possible Cause	Action
No sound is heard.	• The power cord is disconnected. • The batteries in the Unit have lost their charge. • Headphones are connected.	• Connect it firmly. • Replace the batteries. • Disconnect the headphones.
Unable to record.	Cassette record protect tabs are removed.	Cover the holes on the back edge of the cassette with tape.
Poor radio reception	• The System is not properly positioned. • The Antenna is not properly positioned.	• Turn the System to the best reception position. • Extend the Antenna and turn it to the best reception position.
The CD skips.	The CD is dirty or scratched.	Clean or replace the CD.
The CD does not play.	The CD is upside down.	Put the CD in with the label side up.
Unable to operate the Remote Control.	• The path between the Remote Control and the sensor on the Unit is blocked. • The batteries have lost their charge.	• Remove the obstruction. • Replace the batteries.
Operations are disabled.	The built-in microprocessor has malfunctioned due to external electrical interference.	Unplug the Unit then plug it back in.
The cassette door cannot be opened.	During tape playing, the power cord was unplugged.	Plug in the power cord, press the ⏻/I button, and then press the ■/⏏ STOP/EJECT button.

Specifications

Amplifier

Output Power	14 W (7 W + 7 W) at 3 ohms (Max.)
Input jack	MIC (3.5 mm dia. plug) (Matching impedance: 200 ohms - 2 kohms)
Output jack	Headphones (0 - 20 mW/ch, 32 ohms) (Matching impedance: 16 ohms - 1 kohm)

Cassette Deck

Frequency Response	80-12,500 Hz
Wow and Flutter	0.15% (WRMS)

CD Player

Signal-To-Noise Ratio	90 dB
Wow And Flutter	Unmeasurable

Tuner

FM Tuner	
Tuning Range	87.5 - 108.0 MHz
AM Tuner	
Tuning Range	531 - 1,602 kHz (at 9 kHz channel space) 530 - 1,710 kHz (at 10 kHz channel space)
Antenna	Telescopic antenna for FM Built-in ferrite core antenna for AM
Speakers	10 cm (3-15/16") × 2, 3 ohms

General

Dimensions	480 × 186 × 254 mm (W/H/D) (18-15/16 × 7-3/8 × 10 inches)
Mass	Approx. 4.0 kg (8.9 lbs) (without batteries)

Accessories

Power Cord (1)
Remote Control (RM-RXQN1E) (1)
Batteries for Remote Control R6 (SUM-3) /AA (15F) (2)

Power Specifications

Power Requirements	AC 110/127/230 V ~ , 50/60 Hz
Power Consumption	14 W (power on mode) 2.6 W (in Standby mode)

Design and specifications are subject to change without notice.

RC-QN2/QN3

English

Thank you for purchasing the JVC CD Portable System.
We hope it will be a valued addition to your home as well as to your outdoor life, giving you years of enjoyment.
Be sure to read this instruction manual carefully before operating your new stereo system.
In it you will find all the information you need to set up and use the system.
If you have a query that is not answered by the manual, please contact your dealer.

Features

Here are some of the things that make your System both powerful and simple to use.

- The controls and operations have been redesigned to make them very easy to use, freeing you to just enjoy the music.
  - With JVC's **COMPU PLAY** you can turn on the System and automatically start the Radio, CD Player, or Cassette Deck with a single touch. (When power is supplied from AC)
- Sound effects; BEAT, POP, and CLEAR.
- The System incorporates AHB (Active Hyper Bass) PRO circuitry to faithfully reproduce low frequency sounds.
- A 30-station preset capability (15 FM and 15 AM) in addition to auto-seek and manual tuning.
- Auto-reverse tape function (RC-QN3 only).
- A user-friendly timer lets you wake or fall asleep to music.

COMPU PLAY

How This Manual Is Organized

- Basic information that is the same for many different functions - e.g. setting the volume - is given in the section 'Common Operations', and not repeated under each function.
- The names of buttons/controls are written in all capital letters: e.g. TUNER BAND.
- System functions are written with an initial capital letter only: e.g. Normal Play.

Use the table of contents to look up specific information you require.
We've enjoyed making this manual for you, and hope it serves you in enjoying the many features built into your System.

IMPORTANT CAUTIONS

When carrying the Unit

- Do not raise or lower the carrying handle of the Unit with the telescopic antenna extended in order to avoid damaging the antenna.

Where to place the Unit

- Select a place which is level, dry and neither too hot nor too cold (between 5°C/41°F and 35°C/95°F).
- Leave sufficient distance between the Unit and a TV.
- Do not use the Unit in a place subject to vibrations.

Power cord

- Do not handle the power cord with wet hands!
- Some power (2.8 W) is always consumed as long as the power cord is connected to the wall outlet.
- When unplugging the Unit from the wall outlet, always pull the plug, not the power cord.

Malfunctions, etc.

- There are no user serviceable parts inside. In case of system failure, unplug the power cord and consult your dealer.
- Do not insert any metallic object into the System.

Table of Contents

Features 1
How This Manual Is Organized 1
IMPORTANT CAUTIONS 1

Getting Started 2

Common Operations 4

Using the Tuner 5

Using the CD Player 6

Using the Cassette Deck (Listening to a Tape) 7

Using the Cassette Deck (Recording) 8

Using the Timers 10

Using the Microphones 11

Care And Maintenance 12

Troubleshooting 13

Specifications 13

English

Common Operations

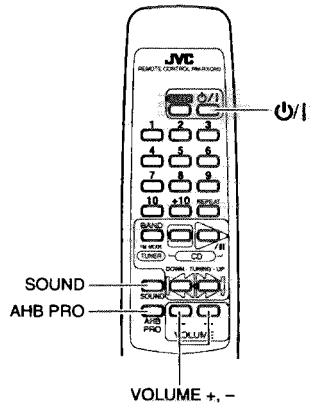

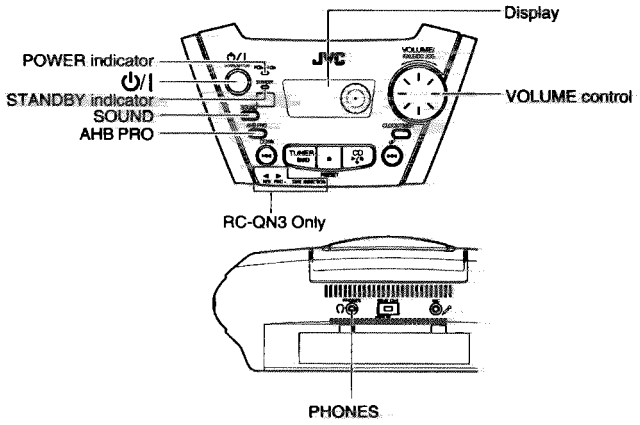

Turning the Power On and Standby

Turning the Unit On

Press the ⏻/I button.

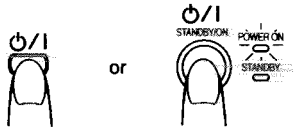

The POWER ON indicator (green) lights up and the display comes on.
The Unit comes on ready to continue in the mode it was in when the power was last turned off.

- For example, if the last thing you were doing was listening to a CD, you are now ready to listen to a CD again. If you wish, you can change to another source.
- If you were listening to the Tuner last, the Tuner comes on playing the station it was last set to.

Note: When power is supplied from the batteries, the ⏻/I button on the Remote Control does not work.

Turning the Unit Standby

Press the ⏻/I button again.

When operating on AC power:

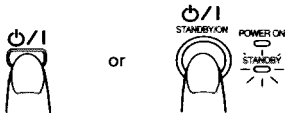

The STANDBY indicator lights up and the display is blank, except for the clock display.

- When in Standby mode, the Unit continues to a small amount of power (2.8 W) to run the display.
- To switch off the Unit completely, unplug the AC power cord from the AC outlet.

When power is supplied from the batteries:
When the Unit is turned off with the ⏻/I button on the Unit (the ⏻/I button on the Remote Control is ineffective), the Standby indicator goes out and the display is blank, except for the clock display. Further, the backlight for the display goes out.
To switch off the Unit completely, remove the batteries from the Unit.

Adjusting the Volume

You can adjust the volume level between 0 and 25 when the Unit is turned on.

Turn the VOLUME control on the Unit to the right or left to increase or decrease the volume level.

OR

Press the VOLUME + or – button on the Remote Control to increase or decrease the volume level.

CAUTION: DO NOT turn on the Unit and/or start playing any source without first setting the VOLUME control to 0, as a sudden blast of sound can damage your hearing, speakers and/or headphones.

For private listening
Connect a pair of headphones to the PHONES jack. No sound comes out of the speakers.
Be sure to turn down the volume before connecting or putting on headphones.

Reinforcing the Bass Sound (AHB PRO)

You can reinforce the bass sound to maintain rich, full bass at low volume (you can use this effect only for playback):
To get the effect, press the AHB (Active Hyper Bass) PRO button.
The "AHB PRO" indicator lights up on the display.
To cancel the effect, press the button again.
The "AHB PRO" indicator goes out.

Sound Effects (SOUND)

The System has the following preset sound effects that give you control over the way your music sounds, so you can tailor it to the acoustics of your room and the quality of your source. Test the sound effects out to hear how each affects the music. Note that the effects work only during playback.

Sound effects

FLAT: No sound effect.
BEAT: Boosts low and high frequencies.

POP: Good for vocal music.
CLEAR: For a wide, dynamic stereo sound.

To get an effect, press the SOUND button repeatedly until the Sound mode you want appears on the display.
Each time you press the SOUND button, the display changes as shown below:

BEAT → POP → CLEAR → FLAT

To cancel the effect, press the SOUND button until "FLAT" appears on the display.

Showing the Time (Display)

In standby mode, both a digital and an analog are displayed.
In Standby mode, both clocks are displayed on the display.

When the Unit is turned on, the analog clock only is displayed.
To display both clocks while the Unit is turned on, press the CLOCK/TIMER button on the Unit.
To return to the original display, press the CLOCK/TIMER button on the Unit once again.

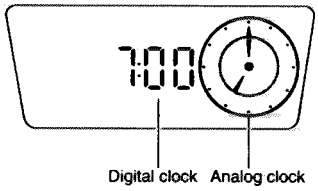

Note: You need to set the clock first in order for it to work. (See "Setting the Clock" on page 10.)

Using the Tuner

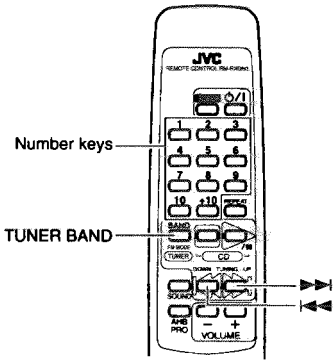

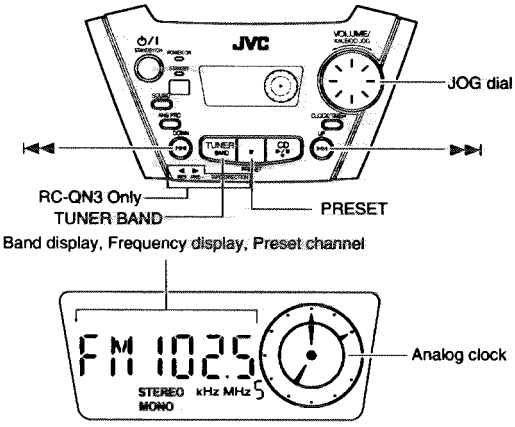

(Display when using the Tuner)

You can listen to FM and AM stations. Stations can be tuned in manually, automatically, or from preset memory storage.

One Touch Radio (AC power only)—

Just press the TUNER BAND button to turn on the Unit and start playing the station you were last tuned to.

- You can also switch from any other sound source to the radio by pressing the TUNER BAND button.

Tuning in a Station

Press the TUNER BAND button.

The Band and Frequency you were last tuned to appear on the display.
Each time you press the button, the band changes as follows:

FM Auto → FM MONO → AM →

Select a station using one of the following methods.

Manual Tuning

Press the ⏮ or ⏭ button repeatedly to move from frequency to frequency until you find the station you want.

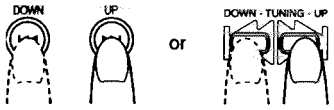

OR

Auto Tuning

If you press and hold the ⏮ or ⏭ button for one second or more, the frequency changes down, or up, automatically until a station is found.

OR

Preset Tuning using the Unit (Possible only after presetting stations)

Press the ■ PRESET button to select the preset station.
After you have selected the preset number, the band and the frequency are displayed.

- Example:Press the ■ PRESET button until the preset number 12 "P- 12" appears.

P- 12 → FM 103.5

OR

Preset Tuning using the Remote Control (Possible only after presetting stations)

Select the station by entering its preset number on the number keys.

- Example:For channel 5, press 5. For channel 15, press +10 then 5.
- The band and the frequency are displayed.

Turn the antenna for best reception.

- For FM broadcast, extend and turn the telescopic antenna.

English

- For AM broadcast, turn the Unit itself.

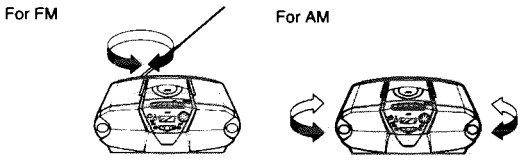

Presetting Stations

You can preset up to 15 FM stations and up to 15 AM stations into memory using the Remote Control.

Auto Presetting (Using the Unit)

In each band, you can automatically preset FM-15, AM-15 stations. Preset numbers will be allocated as stations are found, starting from the station currently tuned to and moving up the frequency.

1. Select a band (AM or FM) by pressing the TUNER BAND button.

2. Press the ■ PRESET button for more than two seconds.

3. Repeat steps 1-2 for the other band.

■ If you want to change any of the auto preset stations, follow the procedure for Manual Presetting.

CAUTION: If the Unit is unplugged or if a power failure occurs, the preset stations will be erased after approx. five minutes. If this happens, you will need to preset the stations again.

Manual Presetting (Using the Remote Control)

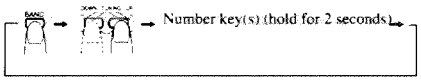

1. Select a band by pressing the TUNER BAND button.

2. Press the ⏮ or ⏭ button to tune in a station.

3. Set the preset number by pressing and holding the number key on the Remote Control.

- To preset numbers 1 to 10: Press the number key and hold down for 2 seconds.
- To preset numbers 11 to 15: Press and release the +10 button, then press the second number key (1 to 5) and hold down for 2 seconds.

When the preset display blinks, the setting is stored and you can release the number key. The display returns to the normal band and frequency display.

Example: Preset number = 12

P- 12 → FM 103.5

4. Repeat steps 1 - 3 for each station.

To change the preset stations, repeat the same steps as above.

To Change the FM Reception Mode

The "STEREO" indicator lights up and you can hear stereo effects, when a program is broadcast in stereo.

However if an FM stereo broadcast is hard to receive or noisy, you can select Monaural mode. Reception improves, but you lose any stereo effect.

Press the TUNER BAND button to select FM MONO mode.

The "MONO" indicator lights up on the display.

To restore the stereo effect, press the TUNER BAND button to select FM Auto mode. The "MONO" indicator goes out.

Using the CD Player

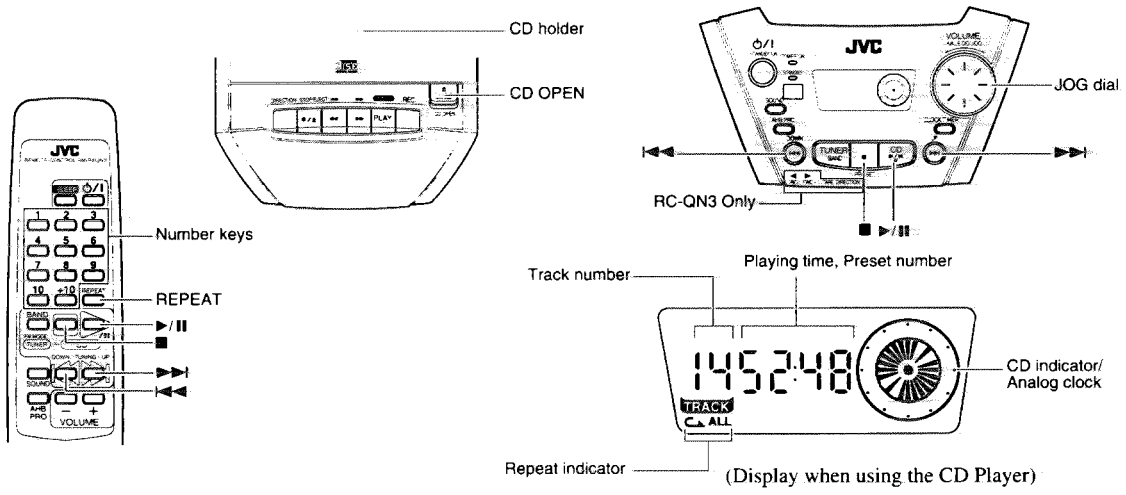

You can use Normal or Repeat Play. Repeat Play can be set to repeat all or just one of the tracks on the CD.

One Touch CD Player (AC power only)

■ Just press the CD ▶/II button.

- The power is automatically turned on. If a CD is already inserted, "PLAY" is displayed and the CD will start playing from the first track.

- If no CD is inserted, "NO DISC" is displayed on the display and the CD Player remains in Stop mode.

Normal Play

1. Press the CD OPEN button on the Unit.

The CD holder opens.

2. Place a CD, with its label side up.

Gently close the CD holder by hand.

Press the CD ▶/II button.

The first track of the CD begins playing.
The CD Player automatically stops when the last track of the CD has finished playing.

- During playback, the track number being played and the playback time elapsed are shown on the display.

To stop playing the CD, press the ■ button.
The following information for the CD is displayed.

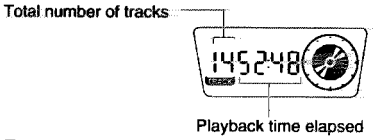

To pause, press the CD ▶/II.
To cancel pause, press the CD ▶/II again. Play continues from the point where it was paused.

Notes:

- You can place an 8 cm (3") CD without an adaptor.
- If the CD cannot be read correctly (because it is scratched, for example), "000000" appears on the display.
- Even if other function is selected during playing the CD, the last track is memorized.

Skip Play (|◀◀ or ▶▶|)

During playback, press the |◀◀ or ▶▶| button to select the track you want.
The selected track starts playing.

- Press and release the ▶▶| button to go forward one track at a time.
- Press and release the |◀◀ button to go back one track at a time.

Search Play

During playback, hold down the |◀◀ or ▶▶| button.
This operation will fast forward/backwards the CD so you can quickly find a particular passage in the track you are listening to (the CD is played slowly for a moment and then the playback speed increases).

Locating a Track directly with the Remote Control

Using the number keys on the Remote Control allows you can go directly to the beginning of any track.

During playback, enter the number of the track you want to listen to using the number keys.
The selected track starts playing.

- Example: For track 5, press 5. For track 15, press +10 then 5. For track 20, press +10, then 10. For track 32, press +10 three times, then 2.

Repeat Play

You can repeat one track or all the tracks on a CD.

During, or before playback, press the REPEAT button on the Remote Control to select the Repeat mode.
The Repeat indicator changes with each press of the button, as shown below.

⊂ → ⊂ ALL →blank display → (back to the beginning)

⊂ : Repeats one track.
⊂ ALL : Repeats all the tracks.

To exit Repeat mode, press the REPEAT button until the Repeat indicator on the display goes out.

Using the Cassette Deck (Listening to a Tape)

(Model RC-QN3)

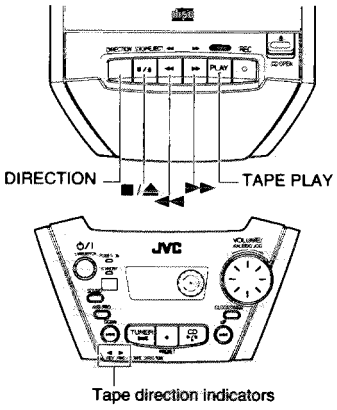

(Model RC-QN2)

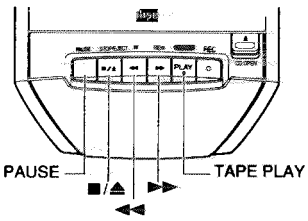

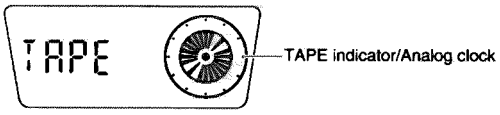

(Display when using the Cassette Deck)

The Cassette Deck allows you to play and record audio tapes

Notes:

- The Cassette Deck performs best with normal tapes (metal or CrO_2 tapes are not recommended).
- The use of tapes longer than 120 minutes is not recommended, since characteristic deterioration may occur and these tapes easily jam in the pinch-roller and the capstan.

One Touch Play (AC power only)

Just press the TAPE PLAY button on the Unit. The power is automatically turned on, "TAPE" is displayed, and if a tape is already in the deck, it will start to play.

Playback

The Cassette Deck for RC-QN3 has an auto-reverse function allowing you to continuously play both sides of a tape. The Cassette Deck on model RC-QN2 plays in one direction only.

1. Press the ■/▲ STOP/EJECT button to open the cassette holder.

2. Insert a cassette tape with the exposed side facing upward as shown below.

English

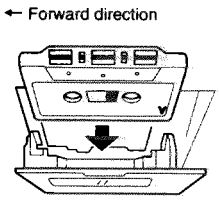

Close the holder gently until it clicks.

Press the TAPE PLAY button.

- On model RC-QN3, both sides of the tape play continuously as follows until you stop the cassette deck.
  1. One side (side A for example) is played. The FWD (◁) direction indicator lights up.
  2. When the tape reaches its end, the other side (side B) is automatically played back. The REV (▷) direction indicator lights up.
  3. At the tape end, the first side (side A) is played back again, and so on.
- For RC-QN2, the tape is played and then stops when it reaches the end.
- The TAPE indicator turns to the right during Playback and Recording, even in Pause mode.

To change the playback direction, before or during playback, press the DIRECTION button on the Unit. (RC-QN3 only) The tape playback direction changes.
To pause, press the PAUSE button on the Unit. (RC-QN2 only)
To cancel pause, press the PAUSE button again. Play continues from the point where it was paused. (RC-QN2 only)
To stop playing, press the ■/▲ STOP/EJECT button.
To remove the tape, stop the tape, and press the ■/▲ STOP/EJECT button again.

To Fast-Forward and Rewind a Tape

Press the ◀◀ (fast-forward) button on the Unit to fast-forward the tape.
Press the ▶▶ (rewind) button on the Unit to rewind the tape.

- The Cassette Deck automatically stops when the tape reaches its end. (RC-QN2 only)
- For RC-QN3, the tape runs to the left when the ◀◀ button is pressed and it runs to the right when the ▶▶ button is pressed, regardless of the indication of the FWD (◁) / REV (▷) direction indicator. The Cassette Deck automatically stops when the tape reaches its end.
- The TAPE indicator does not turn during fast-forwarding or rewinding.

Using the Cassette Deck (Recording)

(Model RC-QN3)

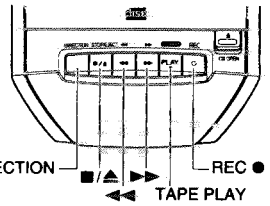

(For RC-QN3)

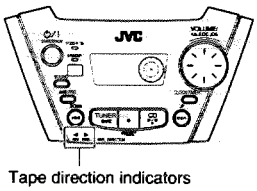

(Model RC-QN2)

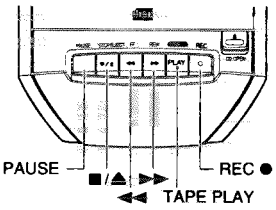

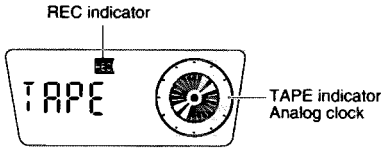

(Display when using the Cassette Deck)

Things To Know Before You Start Recording

- **It may be unlawful to record or playback copyrighted material without the consent of the copyright owner.**
- The correct recording level is automatically set by the ALC (Automatic Level Control) function, and is not affected by the VOLUME control on the Unit or by the use of sound effects.
- Two small tabs on the back of the cassette tape, one for side A and one for side B, can be removed to prevent accidental erasure or recording.
- To record on a cassette with the tabs removed, you must cover the holes with adhesive tape as shown.

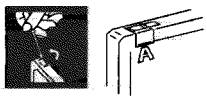

Notes:

- Use normal tapes (not metal or CrO_2 tapes) for recording.
- At the start and end of cassette tapes, there is leader tape which cannot be recorded onto.
- If a recorded tape you make has excessive noise or static, the Unit may have been too close to a TV during the recording. Either turn off the TV or increase the distance between the TV and the Unit.

Recording from the Radio

Press the ■/▲ STOP/EJECT button to open the cassette holder.

Insert a blank or erasable cassette tape with the exposed side facing upward as shown below and wind past the leader tape.

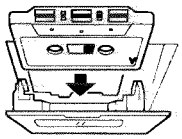

Close the holder gently until it clicks.

4. Tune in to a radio station.

5. Press the ● REC button on the Unit.

The PLAY button is pressed at the same time, the "REC" indicator lights up, and the Unit begins recording.

- For RC-QN3, recording is done in the following manner.
  1. One side (side A for example) is recorded. The FWD (◁) direction indicator lights up.
  2. When the tape reaches its end, the other side (side B) is played (not recorded onto). The REV (▷) direction indicator lights up. (You should press the ■/▲ STOP/EJECT button to stop the tape.)
  3. At the tape end, the tape stops.
- On model RC-QN2, the tape is recorded and then stops when it reaches the end.
- The TAPE indicator turns to the right during Playback and Recording, even in Pause mode.

To pause the recording, press the PAUSE button on the Unit. (RC-QN2 only)

To cancel pause, press the PAUSE button again. Recording continues from the point where it was paused. (RC-QN2 only)

To stop recording, press the ■/▲ STOP/EJECT button.

To remove the tape, stop the tape, and press the ■/▲ STOP/EJECT button again to open the cassette holder.

Recording an AM station (BEAT CUT)

When recording an AM broadcast, beats may be produced which are not heard when listening to the broadcast. If this happens, you can use the BEAT CUT function.

Switch the BEAT CUT switch on the back of the Unit from the NORM-1 to 2 or 3.

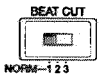

Note: In regular use, the BEAT CUT switch should be set to the NORM-1 position.

Recording from the CD

The CD Player can be started with the Cassette Deck for synchronous recording and everything on the CD recorded onto the tape in the order it is on the CD.

1. Insert a cassette tape in the Cassette Deck and wind past the leader tape.

- On model RC-QN3, be sure that the FWD (◁) direction indicator is lit and the tape is wound for forward playback. (Refer to the tape insertion illustration mentioned above.) If the REV (▷) direction indicator is lit, press the DIRECTION button to correct it.

2. Load a CD.

3. Press the CD ▶/II button.

4. Press the ■ button to stop the CD.

- You can check the number of tracks and the total playback time of the CD on the display. (See page 6.)

5. Select the Repeat mode of the CD if desired.

To select the Repeat mode (⊂ or ⊂ ALL), press the REPEAT button on the Remote Control.

6. Choose whether to have approx. four seconds of blank tape between tracks.

If you want the blank section, skip this step.

If you do not want the blank section, perform the following operation on the CD Player.

- Press the CD ▶/II button twice.

7. Press the ● REC button on the Unit.

The PLAY button is pressed at the same time, the "REC" indicator lights up, and the synchronous recording begins.

- On model RC-QN3, recording happens as follows. (Note: you will need to press the ■/▲ STOP/EJECT button when recording has finished for the first side of the tape.
- One side (side A for example) is recorded → When the tape reaches its end, the other side (side B) is played back (not recorded). → At the end of the tape (side B), the tape stops.
- On model RC-QN2, the tape is recorded and then stops when it reaches the end.
- To continue recording to the other side of the tape, perform the following steps.
  1. Reverse the cassette tape and wind past the leader tape.
  2. Press the CD ▶/II button and then press the ● REC button.

  Then, the synchronous recording begins from the beginning of the last track that was stopped at the end of the first side of the tape.

To stop recording, press the ■/▲ STOP/EJECT button.

To remove the tape, stop the tape, and press the ■/▲ STOP/EJECT button again to open the cassette holder.

Notes:

- If the CD reaches its end before the tape, the tape will continue to run until stopped. Press ■/▲ STOP/EJECT button to stop the tape.
- During synchronous recording, the CD ▶/II, ⏮, and ⏭ buttons for the CD Player do not function.
- If you press the ● REC button during playback the CD, recording will start from the beginning of the track being played.

To Continue Recording to the Other Side of the Tape

On model RC-QN3:

After pressing the ■/▲ STOP/EJECT button to stop synchronous recording when recording has finished for the first side of the tape, carry out the following to continue recording to the other side of the tape.

1. Reverse the cassette tape and wind past the leader tape.
2. Be sure that the FWD (◁) direction indicator is lit, and then press the ● REC button again.
   The synchronous recording will begin from the last track that was stopped at the end of the first side of the tape.

On model RC-QN2:

When the tape reached its end and stopped, carry out the following to continue recording to the other side of the tape.

1. Reverse the cassette tape and wind past the leader tape.
2. Press the ● REC button again.
   The synchronous recording will begin from the last track that was stopped at the end of the first side of the tape.

English

Using the Timers

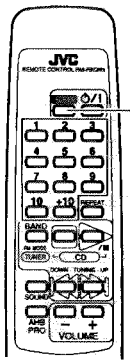

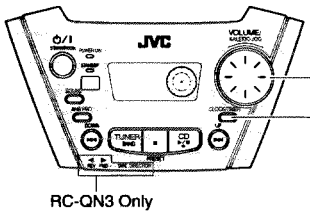

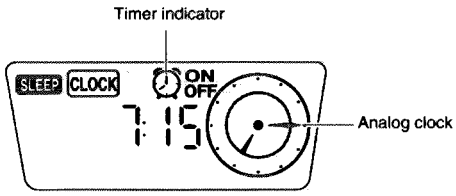

(Display when using the Timer)

The timers let you control listening functions automatically.

Setting the Clock

You can set the clock when the Unit is turned on.

Notes:

- The clock must be correctly set for the timers to work.
- When setting the timers, you have two minutes in which to complete the procedure. Otherwise, the setting is cleared and must be repeated from the beginning.

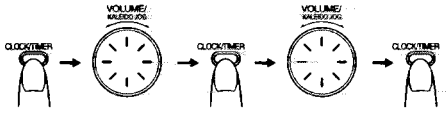

(For 2 seconds) (Display "CLOCK") (Select the time)

1 Press the CLOCK/TIMER button on the Unit and hold for more than two seconds.

2 Turn the JOG dial until the "CLOCK" indicator blinks on the display.

The display changes as follows:

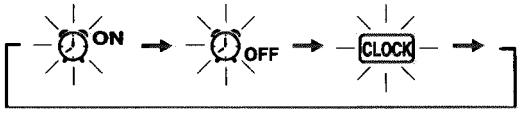

(For 2 seconds) ("CLOCK"indicator) (Select the time)

3 Press the CLOCK/TIMER button.

The "CLOCK" indicator stays lit. The Unit's current set time blinks on the display.

4 Turn the JOG dial to set the time.

Turn the JOG dial to the right or left to increase or decrease the time. Turning it rapidly advances or decreases the time faster.

5 Press the CLOCK/TIMER button.

Then wait for 5 seconds or press the CLOCK/TIMER button once again to return to the original display. The selected time is set and the seconds start counting from 0.

CAUTION: If there is a power failure, the clock loses its setting after approx. five minutes. The display shows "00:00" and the "CLOCK" indicator blinks, and the clock must be reset.

Setting the Daily Timer

Once you have set the Daily Timer. The timer will be activated at the same time every day. You can cancel or re-activate the Daily Timer. Note that the Timer indicator ( ) on the display shows that the Daily Timer you have set is in effect.

Note: Perform each setting within 30 seconds. Otherwise, setting is cleared and must be repeated from the beginning.

1 Press the ⏻/I button to turn on the Unit.

2 Setting the ON time (Example: 7:00)

1. Press the CLOCK/TIMER button on the Unit and hold for more than 2 seconds.
2. Turn the JOG dial until the "ON" indicator blinks on the display.
3. Press the CLOCK/TIMER button.
   The current ON time blinks on the display.
4. Turn the JOG dial to set the time you want the Unit to come on.
   Turn the JOG dial to the right or left to advance or decrease the time.

Turning it rapidly advances or decreases the time faster.

3 Setting the OFF time (Example: 10:15)

1. Press the CLOCK/TIMER button on the Unit.
   The " " indicator lights up and the current OFF time blinks on the display.
2. Turn the JOG dial to set the time you want the Unit to be turned off.

4 Setting the volume level

1. Press the CLOCK/TIMER button on the Unit.
   The Timer indicator is lit and the current volume setting blinks on the display.
2. Turn the JOG dial to the right or left to increase or decrease the volume level.
   Volume setting range: 0 - 25 or –.

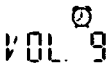

5 Press the CLOCK/TIMER button on the Unit.

The timer setting is completed and the display returns to the display before you set the timer. The Timer indicator stays lit.

6 Before turning off the Unit, prepare the music source.

Tuner: Tune in to the desired station.
CD: Load a CD.
Tape: Load a prerecorded cassette tape.

7 Press the ⏻/I button to turn off the Unit.

To confirm the timer settings (ON/OFF time and volume level), turn on the power, press the CLOCK/TIMER button for more than 2 seconds, and press the CLOCK/TIMER button repeatedly.

To change the timer setting, repeat the setting procedure from the beginning.

CAUTION: If the Unit is unplugged, or a power failure occurs, the timer setting will be lost after approx. five minutes. You will need to reset the clock first, then the timer.

Cancelling the Daily Timer

To cancel the Daily Timer, turn off the Timer indicator as follows:

(Hold for 2 seconds) (2 time)

1 Press the CLOCK/TIMER button on the Unit for more than 2 seconds.

2 Turn the JOG dial until the "⏲OFF" indicator blinks on the display.

3 Press the CLOCK/TIMER button .

The Timer indicator and the CLOCK indicator go out.

To re-activate the cancelled timer, repeat the same steps as for setting the Daily Timer.

Setting the SLEEP Timer

Use the Sleep Timer to turn the Unit off after a certain number of minutes when it is playing. By setting the Sleep Timer, you can fall asleep to music and know that your Unit will turn off by itself rather than play all night.

■ You can only set the Sleep Timer when the Unit is on and a source is playing.

1 Play back a CD, tune in to a desired station, or play back a tape.

2 Press the SLEEP button on the Remote Control.

The "SLEEP" indicator lights up.

3 Set the length of time you want the source to play before shutting off.

- Each time you press the SLEEP button, it changes the number of minutes shown on the display in this sequence:

→ 30 → 60 → 90 → 120 → Cancelled → (back to the beginning)

The display will stop blinking after 5 seconds and return to the display before you set the Sleep Timer.

The Unit is now set to turn off after the number of minutes you have set.

To Confirm the Sleep Time

When the SLEEP button is pressed, the remaining sleep time is displayed. After 5 seconds the original display returns.

To Cancel the SLEEP Timer Setting

Press the SLEEP button until the "SLEEP" indicator goes off on the display.

Turning off the Unit also cancels the SLEEP Timer.

■ If you are setting the Daily Timer, the Unit will be turned on at the set time to wake you up.

Using the Microphones

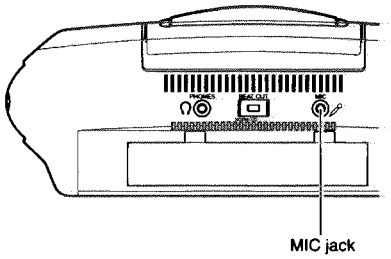

Microphone Mixing

Using a microphone (not supplied), you can mix the microphone sound with a source sound.

1 Connect a microphone by plugging it into the MIC jack on the back of the Unit.

2 Start a source; CD, tape, or tuner.

3 Adjust the volume level, as you sing into the microphone.

Playing the Microphone Sound through the Speakers

1 Connect a microphone by plugging it into the MIC jack on the back of the Unit.

2 Adjust the volume level, as you sing into the microphone.

Note: If "howling" occurs, keep the microphone away from the Unit.

To Record Microphone Mixing on a Tape

1 Connect a microphone by plugging it into the MIC jack on the back of the Unit.

2 Adjust the volume level, as you sing into the microphone.

3 To record, follow the steps in "Recording from the Radio" or "Recording from the CD" according to the source you want to mix. (See pages 8 and 9.)

Note: If "howling" occurs, keep the microphone away from the Unit.

English

Recording from a Microphone on a Tape

1. Connect a microphone by plugging it into the MIC jack on the back of the Unit.

2. Adjust the volume level, as you sing into the microphone.

3. To record, refer to "Recording from Radio" except for tuning in to a radio station. (See page 8.)

Note: If "howling" occurs, keep the microphone away from the Unit.

Care And Maintenance

Handle your CDs carefully, and they will last a long time.

Compact Discs

- Only CDs bearing this mark can be used with this Unit.

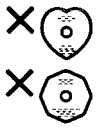

- Continued use of irregularly shaped CDs (heart-shape, octagonal, etc.) can damage the Unit.

- Remove the CD from its case by holding it at the edges while pressing the case's center hole lightly.
- Do not touch the shiny surface of the CD, or bend the CD.

- Put the CD back in its case after use to prevent warping.
- Be careful not to scratch the surface of the CD when placing it back in the case.
- Avoid exposure to direct sunlight, temperature extremes, and moisture.

- A dirty CD may not play correctly. If a CD is dirty, wipe it with a soft cloth in a straight line from center to edge.

CAUTION: Do not use any solvent (for example, conventional record cleaner, spray thinner, benzine, etc.) to clean a CD.

Moisture Condensation

Moisture may condense on the lens inside the Unit in the following cases:

- After turning on heating in the room.
- In a damp room.
- If the Unit is brought directly from a cold to a warm place.

Should this occur, the Unit may malfunction. If this happens, leave it turned on for a few hours until the moisture evaporates, unplug the AC power cord, and then plug it in again.

General Notes

To ensure top performance, keep your CDs and the mechanism clean.

- Store CDs in their cases, and keep them in cabinets or on shelves.
- Keep the CD holder closed when not in use.

Cassette Tapes

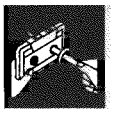

- If a tape is loose, it may get stretched, cut, or caught in the cassette. Take up the slack by inserting a pencil in one of the reels and rotating in the right direction.

- Do not touch the tape surface.

- Do not store the tape:
  - In dusty places
  - In direct sunlight or heat
  - In damp areas
  - On a TV or speaker
  - Near a magnet

Cassette Deck

- If the heads, capstan, or pinch-roller in the Cassette Deck become dirty, you may experience:
  - Loss of sound quality
  - Discontinuous sound
  - Fading
  - Incomplete erasure
  - Difficulty recording
- Clean the heads, capstans, and pinch-rollers using a cotton swab moistened with alcohol.

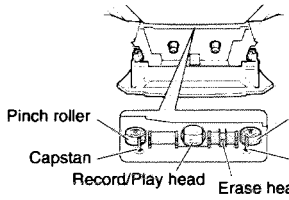

- If the heads become magnetized, the Unit will produce noise or lose high frequency notes.
- To demagnetize the heads, turn off the Unit, and use a head demagnetizer (available at electronics and record shops).

Troubleshooting

- If you have a problem with your System, check this list for a possible solution before calling for service.
- If you cannot solve the problem from the hints given here, or the System has been physically damaged, call a qualified person, such as your dealer, for service.

Symptom	Possible Cause	Action
No sound is heard.	• The power cord is disconnected. • The batteries in the Unit have lost their charge. • Headphones are connected.	• Connect it firmly • Replace the batteries. • Disconnect the headphones.
Unable to record.	Cassette record protect tabs are removed.	Cover the holes on the back edge of the cassette with tape.
Poor radio reception	• The System is not properly positioned. • The Antenna is not properly positioned.	• Turn the System to the best reception position. • Extend the Antenna and turn it to the best reception position.
The CD skips.	The CD is dirty or scratched.	Clean or replace the CD.
The CD does not play.	The CD is upside down.	Put the CD in with the label side up.
Unable to operate the Remote Control.	• The path between the Remote Control and the sensor on the Unit is blocked. • The batteries have lost their charge.	• Remove the obstruction. • Replace the batteries.
Operations are disabled.	The built-in microprocessor has malfunctioned due to external electrical interference.	Unplug the Unit then plug it back in.
The cassette door cannot be opened.	During tape playing, the power cord was unplugged.	Plug in the power cord, press the ⏻/I button, and then press the ■/⏏ STOP/EJECT button.

Specifications

Amplifier

Output Power	14 W (7 W + 7 W) at 3 ohms (Max.)
Input jack	MIC (3.5 mm dia. plug) (Matching impedance: 200 ohms - 2 kohms)
Output jack	Headphones (0 - 20 mW/ch, 32 ohms) (Matching impedance: 16 ohms - 1 kohm)

Cassette Deck

Frequency Response	80 - 12,500 Hz
Wow and Flutter	0.15% (WRMS)

CD Player

Signal-To-Noise Ratio	90 dB
Wow And Flutter	Unmeasurable

Tuner

FM Tuner	
Tuning Range	87.5 - 108.0 MHz
AM Tuner	
Tuning Range	531 - 1,602 kHz (at 9 kHz channel space) 530 - 1,710 kHz (at 10 kHz channel space)
Antenna	Telescopic antenna for FM Built-in ferrite core antenna for AM
Speakers	10 cm (3-15/16") × 2, 3 ohms

General

Dimensions		480 × 186 × 254 mm (W/H/D) (18-15/16 × 7-3/8 × 10 inches)
Mass	RC-QN2	Approx. 4.2 kg (9.3 lbs) (without batteries)
	RC-QN3	Approx. 4.4 kg (9.8 lbs) (without batteries)

Accessories

Power Cord (1)
Remote Control (RM-RXQN3E) (1)
Batteries for Remote Control R6 (SUM-3) /AA (15F) (2)
AC plug adaptor (1) (U, US, UX, UT)

Power Specifications

Power Requirements	AC 110/127/230 V ~ , 50/60 Hz
Power Consumption	17 watts (power on mode) 2.8 watts (in Standby mode)

Design and specifications are subject to change without notice.

-MEMO-

Removalot Main Parts

Front cabinet assembly

1. Detach the cover by pressing down the pawls at either side of the battery cover on the back of the unit.
2. Remove the 8 screws (1) securing the front cabinet assembly from the back of the unit.
3. To remove the volume control knob on the front panel, thread a thin piece of string between the volume control knob and the cabinet, and pull out the knob.
4. Open the cassette door, pull out the front cabinet assembly slightly, and disconnect the speaker connector CN309 from the main board assembly.
5. Lower the handle and pull it out.
   (To replace the handle, remove the 2 screws (1) attaching the handle.)

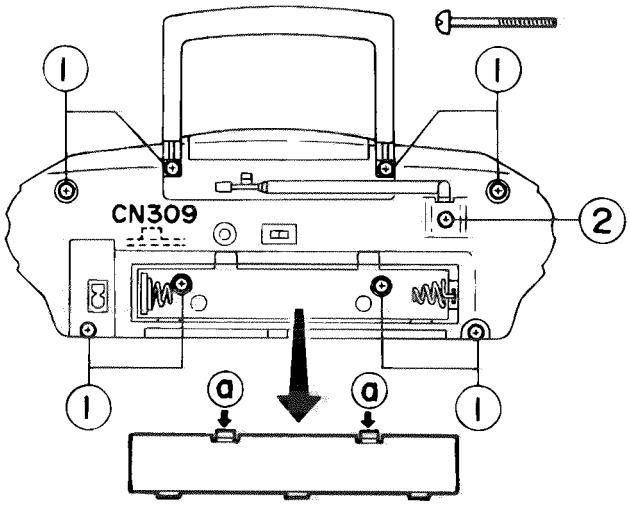

Detaching the speaker assembly

1. Remove the 4 screws (3) attaching the speaker. (Detach the other speaker in the same way.)

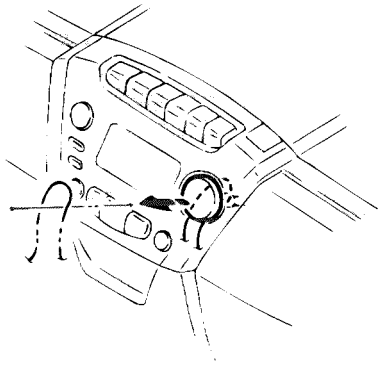

Cassette door assembly

1. Detach the front cover, then remove the shaft on the spring side and pull it out. (When assembling, install it from the damper side. When finished assembling, make sure that the spring is at the specified position.)

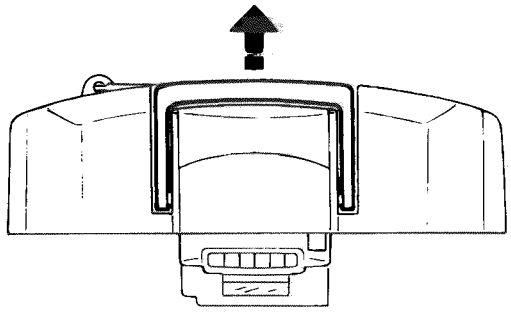

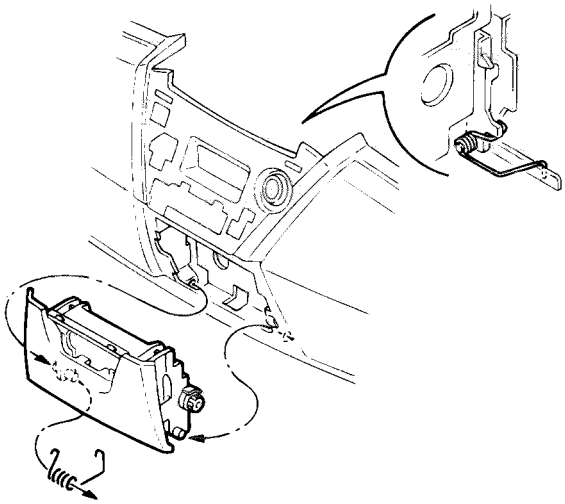

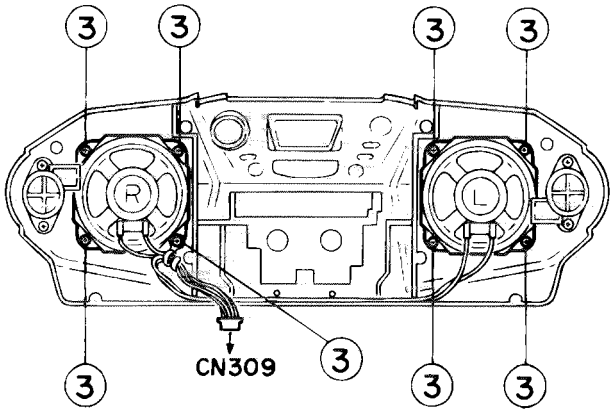

CD player assembly

1. Disconnect the CN306 connector on the power board assembly. (Disconnecting the CN307 connector on the power board makes the procedure easier.)
2. Pull out the CD unit section from the cabinet, open the CD door and remov
e the 2 screws (5) securing the CD case.
3. Slide the CD door and CD case section back and release the two hooks (C).
4. Disconnect the CD machanism's pickup card wire and 6-pin connector from the CN601 and CN602 on the main board assembly.
5. Remove the 2 screws (6) securing the main board assembly and release the two connections (d) to the holder at 2 positions.
6. Release the switch board assembly pawl (e) from the rear of the CD case.
7. For wire processing, refer to Fig. 14. · · · · · ·

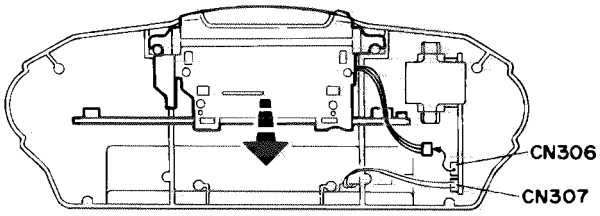

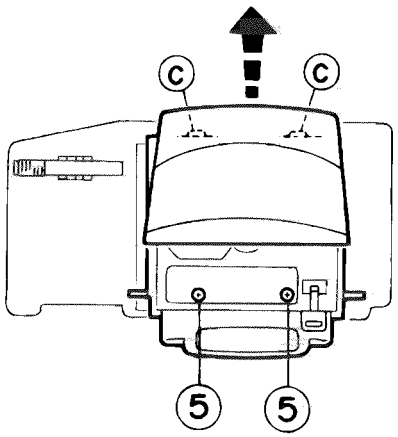

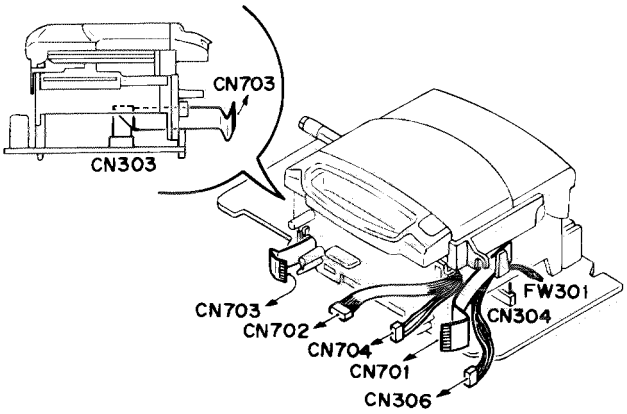

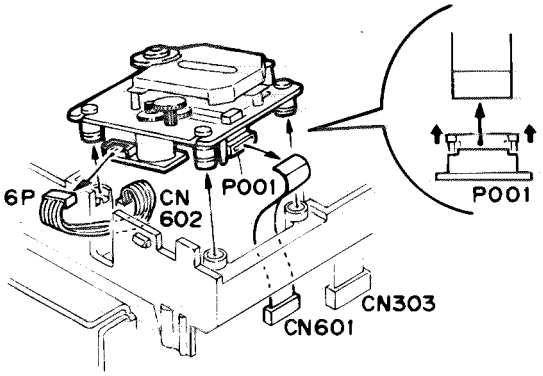

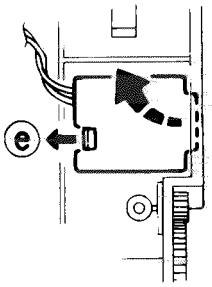

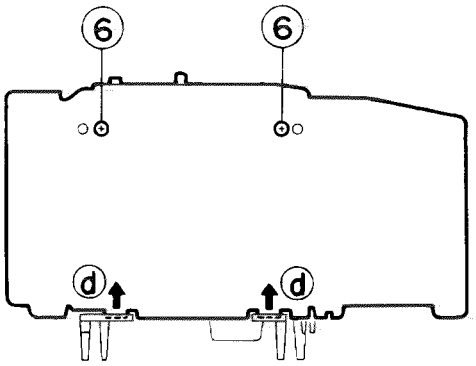

Power unit

1. Remove the 2 screws (7) securing the power transformer.
2. Disconnect the CN307 connector from the power board assembly.
3. Remove the 2 screws (8) securing the power board assembly.

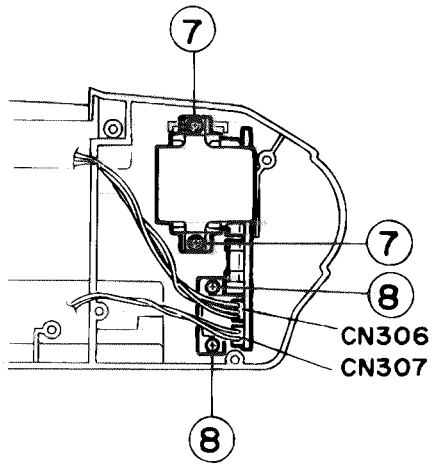

Antenna

1. Remove the rear panel screw (2) securing the antenna.
2. Pull out the antenna. (When installing the antenna, it should be combined with the spring as shown in the figure.)

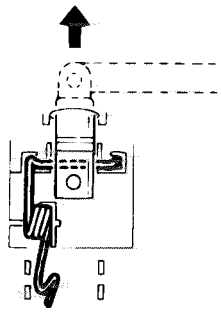

Battery contact board assembly

1. Disconnect the CN307 connector on the power board assembly.
2. Lower the battery contact fixing pawl (f) to pull out the board. s shown in the figure.)

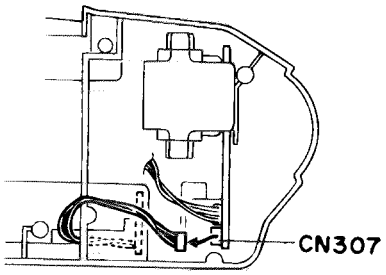

CD Mechanism section

Pickup unit

1. Remove fore screws retaing the pick cover
2. While pressing the stoper in the arrow direction, pullout the shaft.
3. remobe the pickup unit.

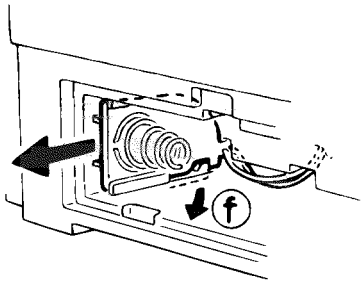

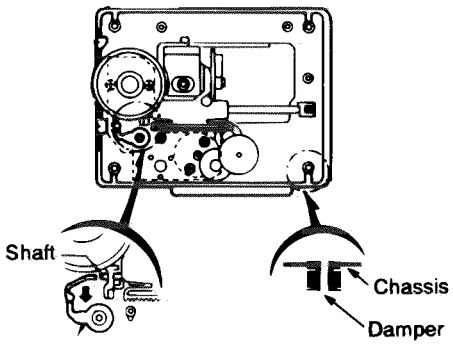

Shaft stopper
While pressing the stopper in the arrow direction, pull out the shaft.

Mounting of damer

Detaching the combined cassette mechanism /CD unit/main board assembly

1. Disconnect CN306 from the power board assembly. Disconnecting CN307 makes the procedure easier.
2. Remove the processed wires from the cabinet.
3. Remove the fixing screw (4) at the lower left of the cassette mechanism.
4. Pull out the unit.

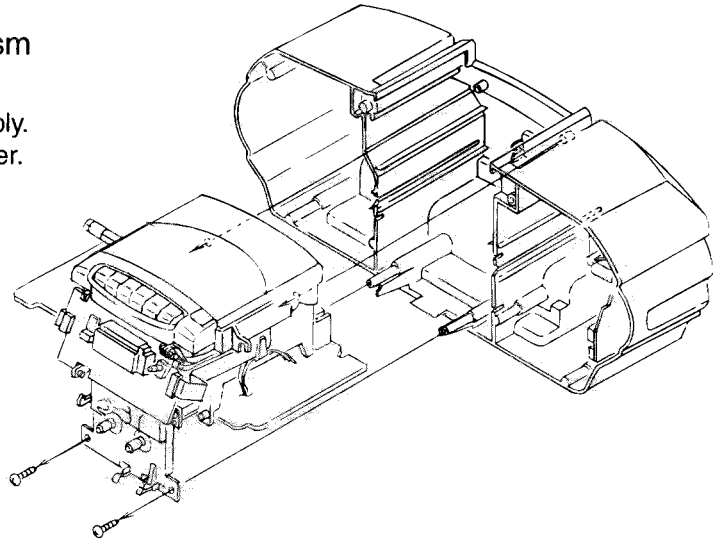

Detaching each assembly

Operation switch board assembly

1. Disconnect CN701, CN702, CN703 and CN704 on the operation switch board assembly.
2. Release the two pawl s (g) under the switch board assembly to detach the switch board assembly. (To detach the operation switch board assembly together with the switch board holder, release the left and right pawl s (b) on the holder.) apeCassette mechanism assem

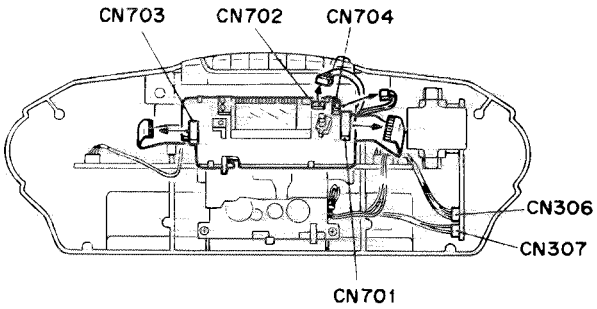

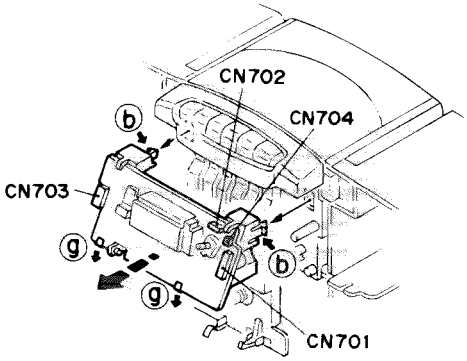

Cassette mechanism assembly

1. Detach the switch board together with the holder.
2. Remove the 3 screws (4) securing the cassette mechanism assembly.
3. Disconnect the CN301 and CN308 connectors on the main board assembly.
4. Pull the cassette mechanism assembly down to detach it. (For cassette mechanism wire processing, refer to Figs. 7 and 8.)

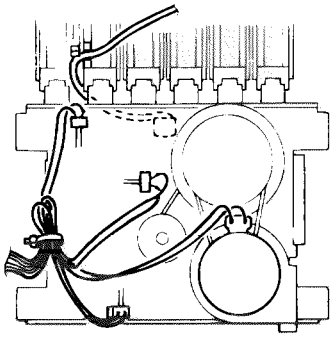

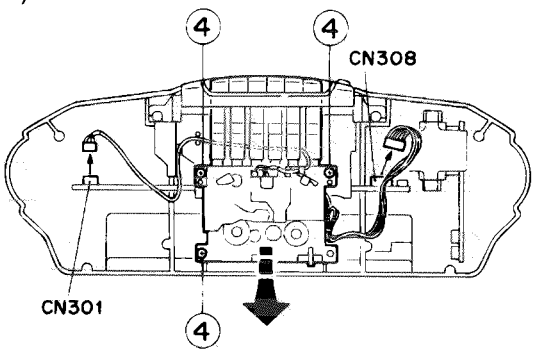

■Cassette Mechanism Section (RC-QN1/QN2 Only)

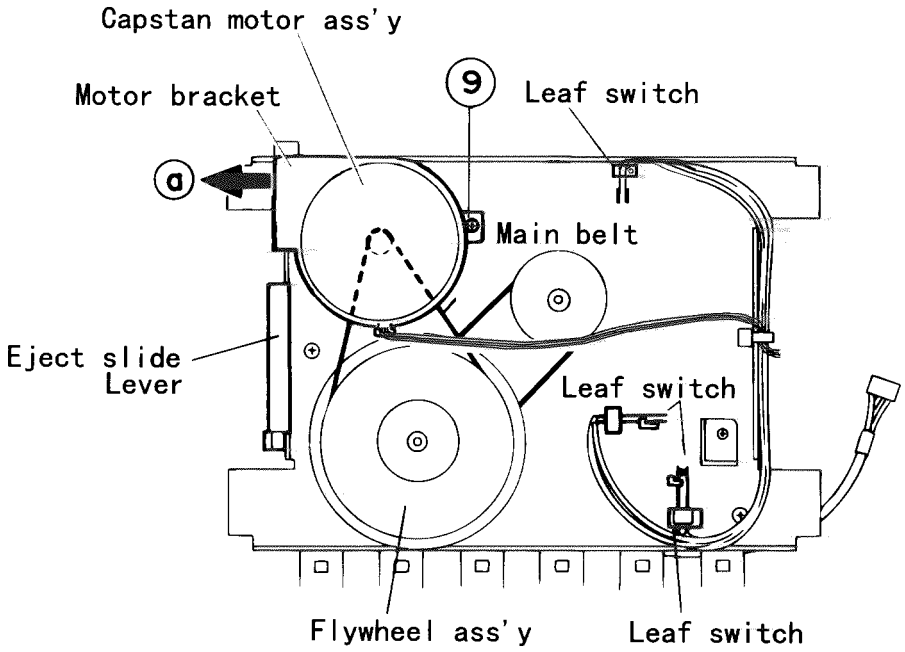

Fig.2-10

■ **Capstan motor** (Fig.2-10)

1. Remove the cassette mechanism assembly. (Refer to the article "Cassette mechanism assembly" appearing on a previous page.)
2. Remove one screw ⑨ retaining the capstan motor assembly from the back of the cassette mechanism assembly.
3. Disengage the main belt from the flywheel assembly. Then slide the capstan motor slightly in the direction of the arrow ⓐ while lifting it upwards to remove together with the main belt.

■ **Eject slide lever** (Fig.2-11)

1. Place the cassette mechanism back side frontward and disengage the stopper arm ⓑ of the Eject slide lever by pressing it inwards through the opening of the chassis with a small screwdriver as shown in Fig.2-11.

■ **Leaf switch** (Fig.2-12)

1. Press the leaf switch in the direction of the arrow ⓒ and then remove it in the direction of the arrow ⓓ referring to Fig.2-12.

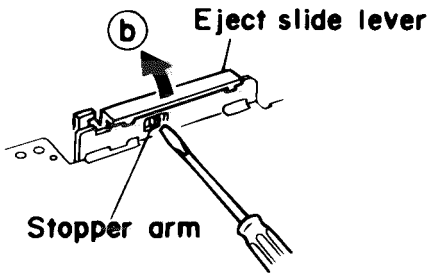

Fig.2-11

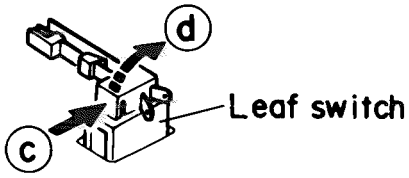

Fig.2-12

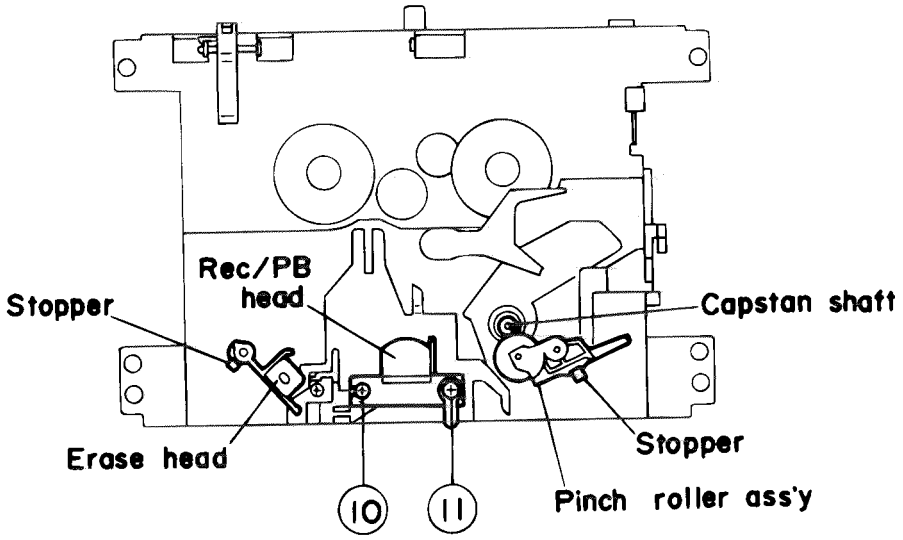

Fig.2-13

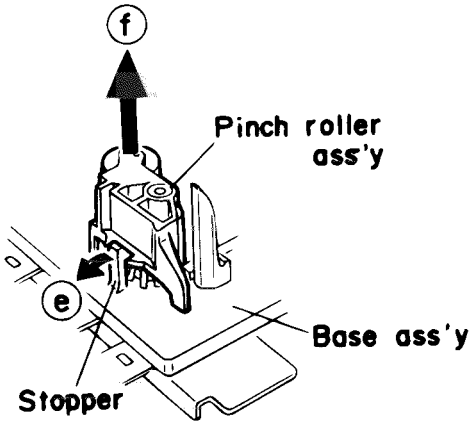

Fig.2-14

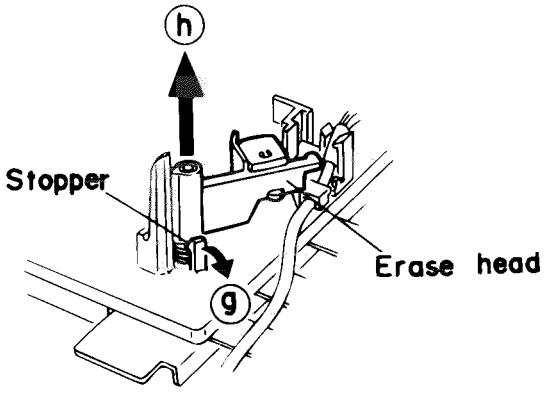

Fig.2-15

■ **Pinch roller assembly** (Fig.2-13 to 2-14)

1. Pull out the stopper protruding from the base assembly in the direction of the arrow ⓔ to remove it from the pinch roller assembly.
2. Then, pull out the pinch roller assembly in the direction of the arrow ⓕ.

■ **Rec /PB head and erase head** (Fig.2-13 to 2-15)

1. Remove two screws ⑩, ⑪ retaining the Rec/PB head.
2. Pull out the stopper of the erase head in the direction of the arrow ⓖ.
3. Pull out the erase head in the direction of the arrow ⓗ.

■ **Flywheel assembly** (Fig.2-16)

1. Remove the split washer retaining the flywheel assembly in the direction of the arrow ⓘ.
2. Pull the flywheel assembly out of the back side of the cassette mechanism assembly in the direction of the arrow ⓙ.

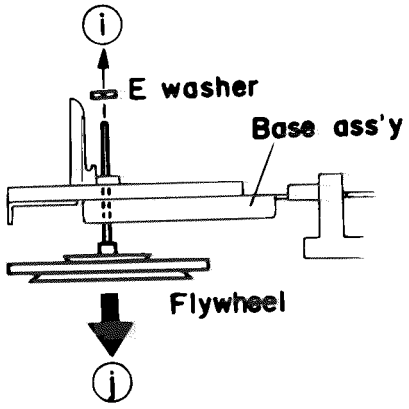

Fig.2-16

■Cassette mechanism section for RC-Q3

■ **Removal of pinch roller** (See Fig.2-22)
Remove washers ⓒ and ⓒ' retaining the pinch roller.

■ **Removal of disc unit** (See Fig. 2-17)
Caution: Don't overload the gear. And be sure to start the above operation after installing the fly-wheel.

1. Remove one screw ⑩ retaining the motor switch (FF/REW).
2. Remove one screw ⑪ retaining the disc base bracket and play motor switch.
3. Remove two springs hanging at the recording lever lock bracket.
4. Setting up the disc base unit assembly in the direction of arrow, remove the pawl (D).

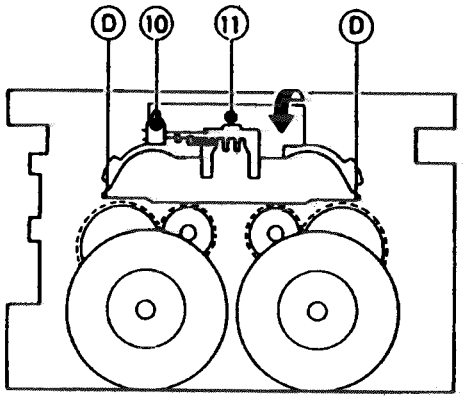

Fig. 2-17

■ **Removal of fly-wheel** (See Fig. 2-29)
Remove the washer (E) retaining the fly-wheel together with the slit washer.

■ **Removal of cam gear** (See Fig.2-18)
Remove the slit washer (F) retaining the cam gear.

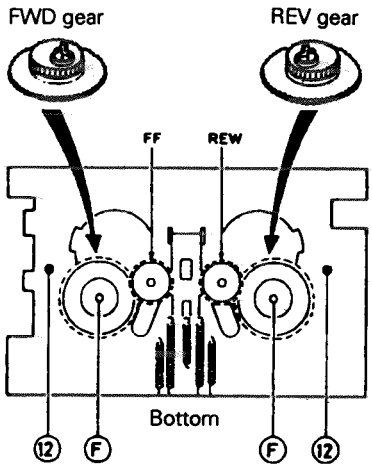

Fig. 2-18

■ **Removal of button base assembly** (See Fig. 2-19)

1. Turn the mechanism upside down and remove two screwes ⑫ retaining the button base assembly.
2. Remove one screw ⑬ retaining the pause button lever.
3. Remove the button lever stud from the pause button level while pushing the pause button lever.
4. Push the reverse button lever and remove one screw ⑭ retaining the reverse button lever. Then, remove the button reverse stud.
5. Remove seven springs in the rear of the mechanism (Refer to G, H, K, L, M, N, P = cassette mechanism section)

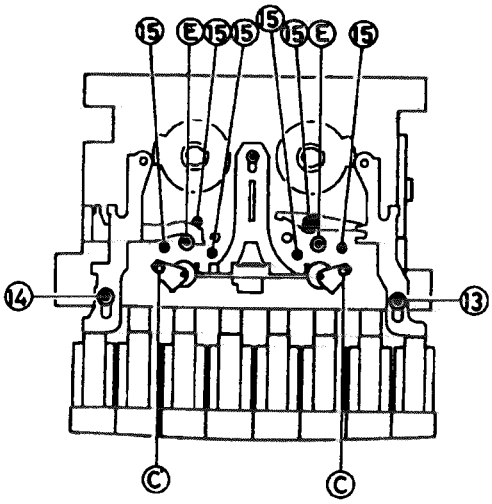

Fig. 2-19

■ **Motor assembly and removal of motor bracket**
(See Fig. 2-20. 2-21)

1. Remove three screws ① retaining the motor assembly.
2. Remove two screws ② retaining the motor bracket.

■ **Remove of head assembly** (See Fig. 2-22. 2-23)

1. Remove the extension board of head wire. Then push both sides of wire clamp along the direction of the arrow to remove the head assembly.
2. Unsolder the head wire.
3. Remove two screws ③ retaining the head assembly.
4. Remove two screws ④ for the head azimuth.
5. As shown in Fig. 2-22, remove the gear (B) shaft as pulling it along the "Y" direction and raise the head assembly with your hand.
6. Turn the erasion head arm assembly (A) along the arrow direction and remove it referring to Fig. 2-22.

■ **Head replacement** (See Fig. 2-23)

1. Remove the head gear (R).
2. Remove the pawls (S) on both sides of the holder.

■ **Head assembly** (See Fig. 2-25)

1. Set the slide plate for head rotation on its stand.
2. For setting two gears for head rotation, combine ⓐ and ⓑ parts as shown in the figure into slide plate for head rotation.
3. Following these main points in Fig. 2-26, proceed with the head gear and the gear for head rotation.

* After installation, operate the direction button and confirm the reversion of 180° and the head to be vertically positioned.

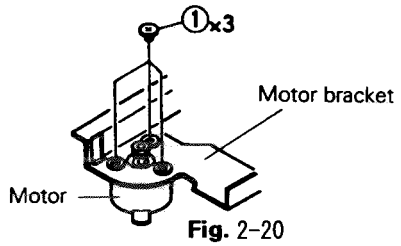

Fig. 2-20

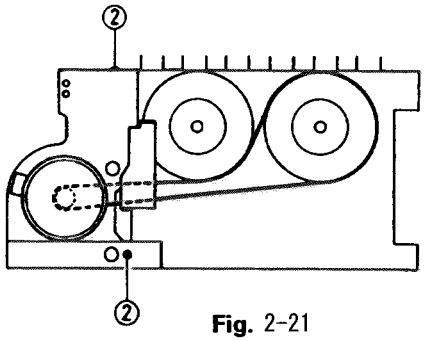

Fig. 2-21

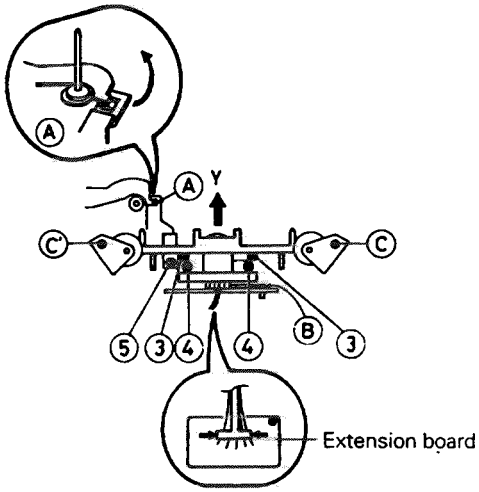

Fig. 2-22

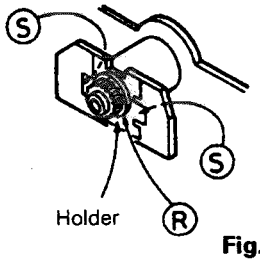

Fig. 2-23

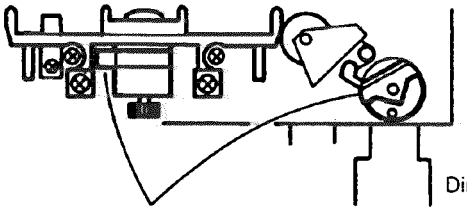

Fig. 2-24

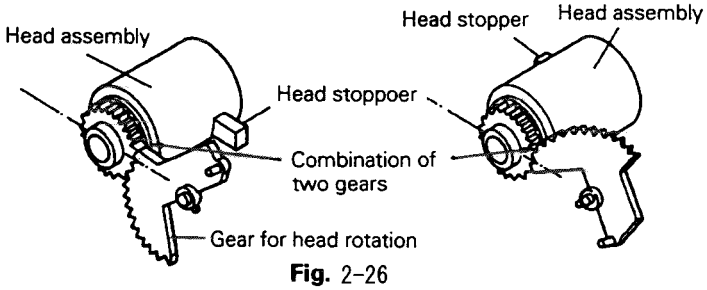

Fig. 2-26

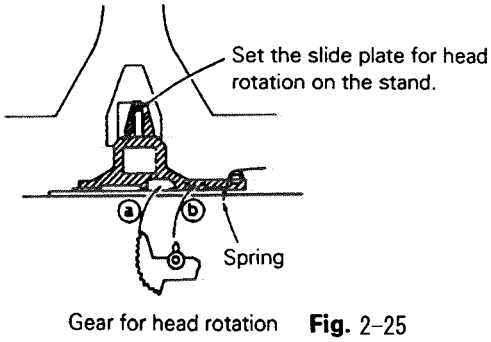

Fig. 2-25

Description of Main ICs

■MN35510(IC651):Digtal Servo & Digtal Signal Processor

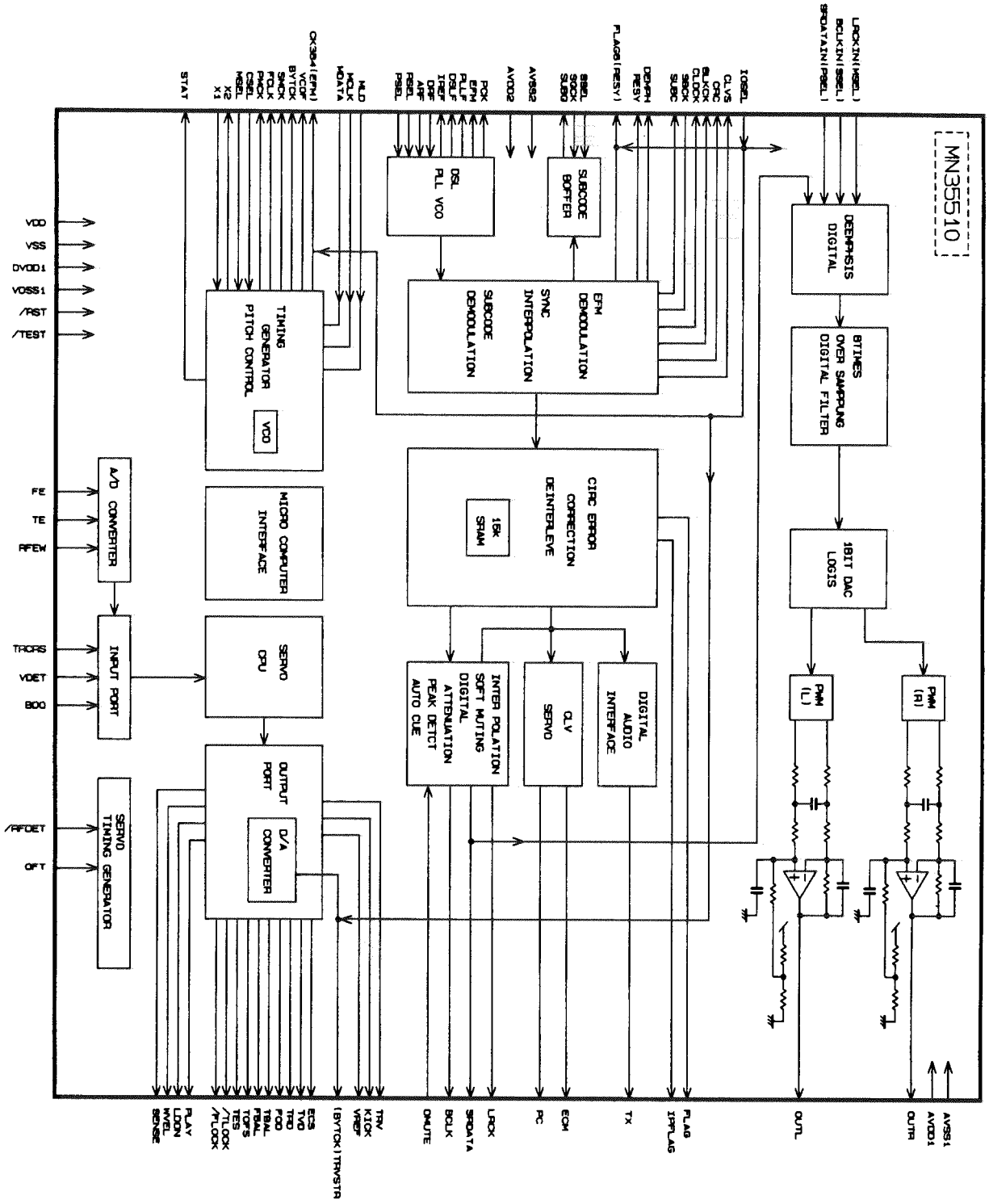

■ BA6897FP(IC602):4channel driver

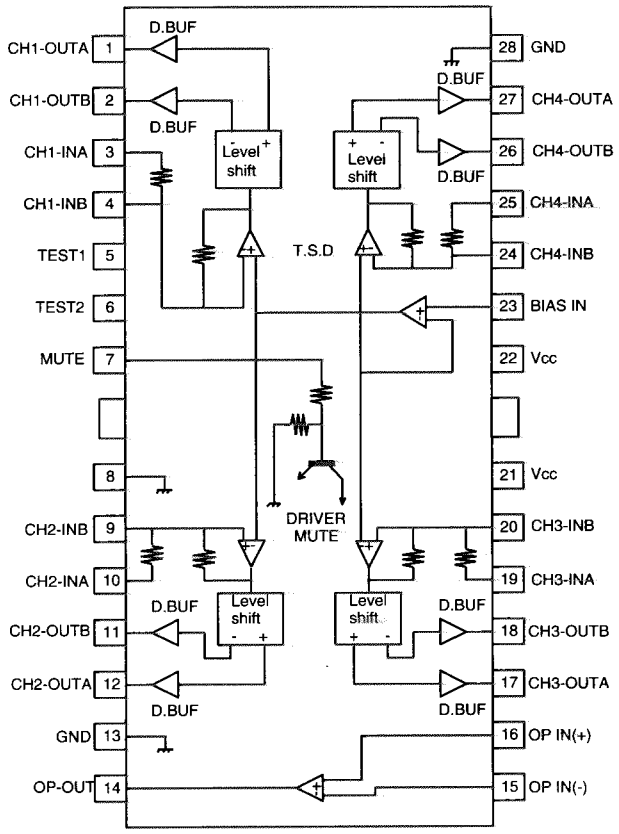

■ LC72136N(IC3):PLL Frequency sinsesizer L S I

1. Layout

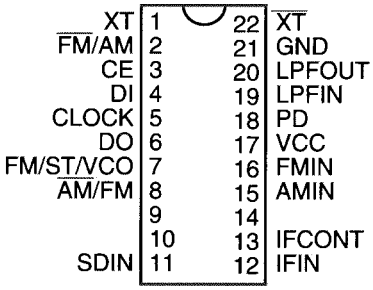

2. Block

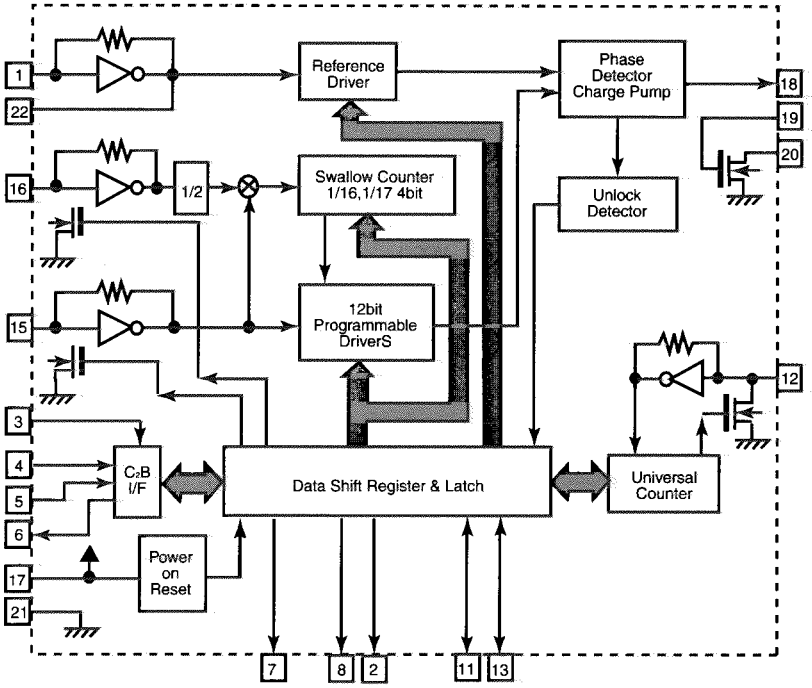

3. Function

Pin No.	Symbol	I/O	Function	Pin No.	Symbol	I/O	Function
1	XT	I	X'tal oscillator connect (75KHz)	12	IFIN	I	IF counter signal input
2	$\overline{FM}$/AM	O	LOW:FM mode	13	IFCONT	O	IF signal output
3	CE	I	When data output/input for 4pin(input) and 6pin(output): H	14		-	Not use
4	DI	I	Input for receive the sirisl data from controller	15	AMIN	I	AM Local OSC signal output
5	CLOCK	I	Sync signal input use	16	FMIN	I	FM Local OSC signal input
6	DO	O	Data output for Controller Output port	17	VCC	-	Power suplly(VDD=4.5~5.5V) When power ON:Reset circuit move
7	FM/ST/VCO	O	"Low": MW mode	18	PD	O	PLL charge pump output(H: Local OSC frequency Height than Reference frequency. L: Low Agreement: Height impedance)
8	AM/FM	O	Not use	19	LPFIN	I	Input for active lowpassfilter of PLL
9	—	-	Not use	20	LPFOUT	O	Output for active lowpassfilter of PLL
10		-	Input/output port	21	GND	-	Connected to GND
11	SDIN	I/O	Data input/output	22	$\overline{XT}$	I	X'tal oscillator(75KHz)

■TA2008AN(IC 2) FM RF / IF / DET / MPX, AM RF / IF / DET

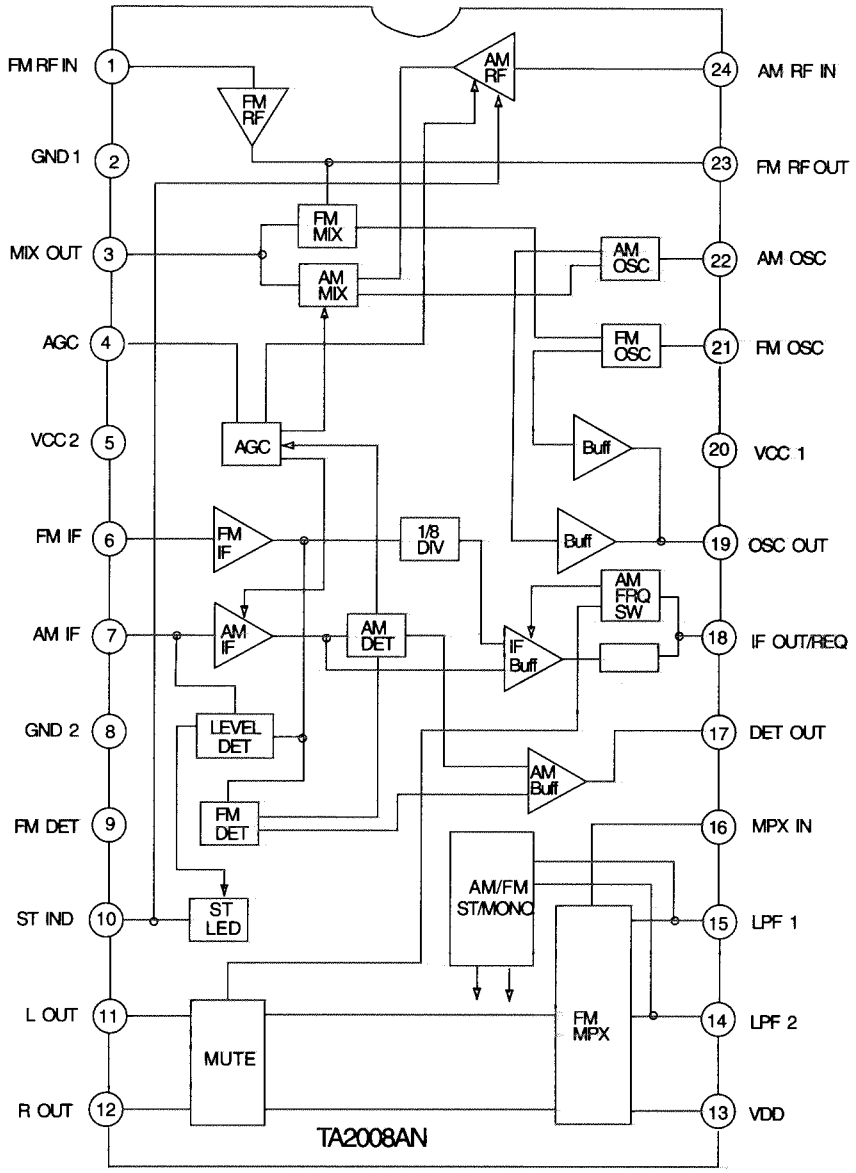

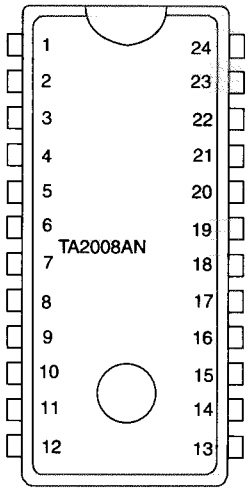

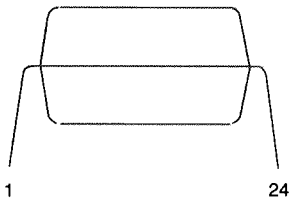

■ AN8806SB(IC601):RF&Servo AMP

1.Treminal Layout

PD	1	36	PDAC
LD	2	35	PDBD
LDON	3	34	PDF
LDP	4	33	PDE
VCC	5	32	PDER
RF-	6	31	PDFR
RF OUT	7	30	TBAL
RF IN	8	29	FBAL
C.AGC	9	28	EF-
ARF	10	27	EF OUT
C.ENV	11	26	TE-
C.EA	12	25	TE OUT
CS BDO	13	24	CROSS
BDO	14	23	TE BPF
CS BRT	15	22	VDET
OFTR	16	21	LD OFF
/NRFDET	17	20	VREF
GND	18	19	ENV

2.Block Diagram

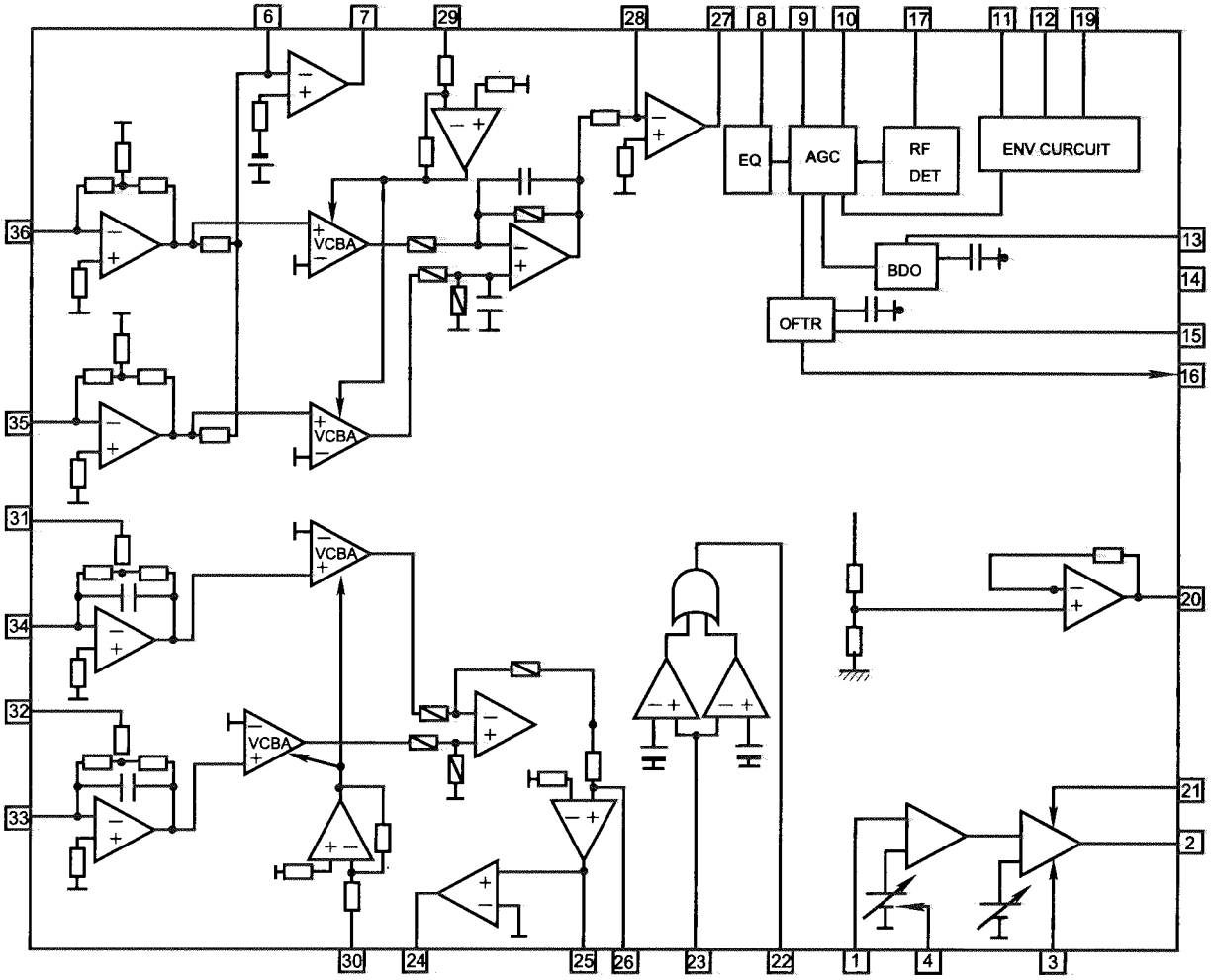

Main Adjustment

■ Test Instruments required for adjustment

1. Low frequency oscillator
   (Frequency range: 50Hz to 20kHz)
   (Output : 0 dBs across 600 Ω terminating resistor)
2. Attenuator(Impedance : 600 Ω)
3. Test Tapes
   VTT712 ····· For tape speed,wow & flutter check
   VTT722、724 ····· For playback,output level check
   VTT736 ····· For playback frequency response check
   VTT702 ····· For head azimuth adjustment
4. Blank tape TYPE1:AC − 225
5. Electronic voltmeter,
6. Distortion meter
7. Frequency counter
8. Wow and flutter meter
9. Torque gauge (Cassette type) ····· CTG − N
10. Test disc ····· CTS1000
11. Jitter meter ····· NJM631
12. TE Offset ····· LTM9055

■ Measuring conditions (Amplifier section)

Supply voltage ····· AC120V (50Hz)
DC9V(UM − 1 × 6)

Reference output level Speaker
:0 dBs (0.775V) / 3 Ω
Headphone
: − 10 dBs (0.245V)/ 32 Ω

Reference input level
: − 20dBs supplied to test point CN1

Standard test frequency ····· 1kHz

Output measuring point ····· Speaker terminal
: Dummy load 3 Ω

● Standard position of switches

Function switch ····· TAPE

Beat cut switch ····· NORMAL

● Standard position of controls

Tone ····· Maximum position

Main volume adjust ····· 0 dBs output position

● Test remarks

1. Negative side of the input and output terminals of the testing set, shall be isolated from each other. The negative side should not be commonly connected when a 2channel electronic voltmeter is connected.
2. A dummy load shall be connected to the output terminal and the lead wires of dummy load shall be as thick as possible.

■ Measuring condition (Tuner section)

Power supply voltage to tuner ····· Vcc: DC 6V

Reference output ····· Speaker : 0.245V / 3 Ω

AM modulation ····· 400Hz, 30%

FM modulation ····· 400Hz deviation 22.5kHz

● Remarks for alignment

1. Connect 30 pF capacitor and 33 k Ω resistor to the output terminal of the IF sweeper in series while 0.082 μ F capacitor and 100k Ω resistor to the input terminal in series.
2. Set the output level of the IF sweeper as low as adjustable.
3. IF alignment is not necessory for both AM and FM MPX alignment is not necessory either. All IFTs and MPX coil are non− adjusting type.

■ Cassette Amplifier Section

Item	Conditions	Adjustment & Confirmation Method	Standard Value	Adjusting Point
Head azimuth adjustment	• Test tape: VTT702 (8 kHz) • Test output from: Speaker terminal (with 3 Ω load)	1. Play back the test tape VTT702 (8 kHz signal). 2. Adjust the azimuth adjusting screw so that phase difference between R and L channels is minimum with the output level that is the maximum level plug less than 2 dB in the FWD and REV mode. After the adjustment apply screw sealant onto the azimuth adjusting screw for more than half the screw head. 3. If the head azimuth is still maladjusted, re-adjust it with the azimuth adjusting screw alternately in the FWD and REV modes.	• Output: Max. level plus less than 2 dB • Phase difference between R & L ch: Minimum	Azimuth adjusting screw (after head replacement only)
Tape speed, Wow & flutter check	• Function selector: TAPE • Test tape: VTT712 (3 kHz) • Test output from: Speaker terminal (with 3 Ω load)	1. Play back the end portion of the test tape VTT712 (3 kHz signal). 2. At that time check to see if the frequency counter reads 2940 to 3090 Hz. If not, adjust the semi-fixed resistor inside the motor to obtain the specified frequency. 3. Wow and flutter must be 0.38 % or less (unweighted).	Frequency: 2940–3090 Hz 0.38 % or less (unweighted)	Tape speed (with semi-fixed resistor inside motor)
Playback output check	• Function selector: TAPE • Test tape: VTT722, VTT724 (1 kHz) • Test output from: Speaker terminal (with 3 Ω load)	1. With the test tape VTT722 (1 kHz signal) being played back, confirm that the speaker output is 2.1 W or more with 10 % distortion. 2. With the test tape VTT724 being played back, confirm that the deviation between R-ch and L-ch outputs is less than 3 dB.	• Speaker output with 10 % distortion: 2.1W or more • Deviation between R & L ch outputs: 3 dB or less	
Playback frequency response check	• Function selector: TAPE • Test tape: VTT736 • Test output from: Speaker terminal (with 3 Ω load)	With the test tape VTT736 being played back, confirm that the deviation between 1 kHz and 125 Hz signals is 6 ± 3 dB and that between the 1 kHz and 8 kHz signals is 0 ± 4 dB.	• Deviation between 1 kHz & 125 Hz: 6 ± 3 dB • Deviation between 1 kHz & 8 kHz: 0 ± 4 dB	
REC/PB sensitivity check	• Function selector: TAPE • Mode: Recording • Test input to: CN301	With the input of 1 kHz, –20 dBs signal to the test point CN301, confirm that the level difference between the recording and playback is 0 ± 3 dB or less.	• Level difference between REC & PB: 0 ± 3 dB or less	

■ **Tuner Sections**

Item	Conditions	Adjustment & Confirmation Methods	Stand. values	Adjust
FM, AM IF adjustment		☆ Since a solid IF is being used, no adjustment is required.		
MPX adjustment		☆ Since a ceramic resonator is being used, no adjustment is required.		
FM tracking adjustment		☆ Since a fixed coil is being used, no adjustment is required.		
AM tracking adjustment	• Band : AM • Signal input Standard loop antenna • Test point : TP1 (Positive) : TP2 (Negative) : TP9 • Signal output : CN1	① Confirm so that the CN1 output is maximam when 530kHz (preset 1) is received from AM signal generator. ② Incase voltage at TP9 is more than 5.0V adjust L4 to obtain 5.0 ± 0.1V at TP9. ③ Adjust L3 so that the CN1 output is maximum when 600kHz (preset 3) is received from the AM signal generator. ④ Adjust TC2 so that the CN1 output is maximum when 1500kHz (preset 4) is received from the AM signal generator. ⑤ Repeat the item ④ , ⑤ , adjust for no further improvement.	Output level : Maxmum 5.0 ± 0.1V at TP9 Output level : Maxmum Output level : Maxmum	 L4 L3 TC2 L3, TC2

Block Diagram (RC-QN1 Only)

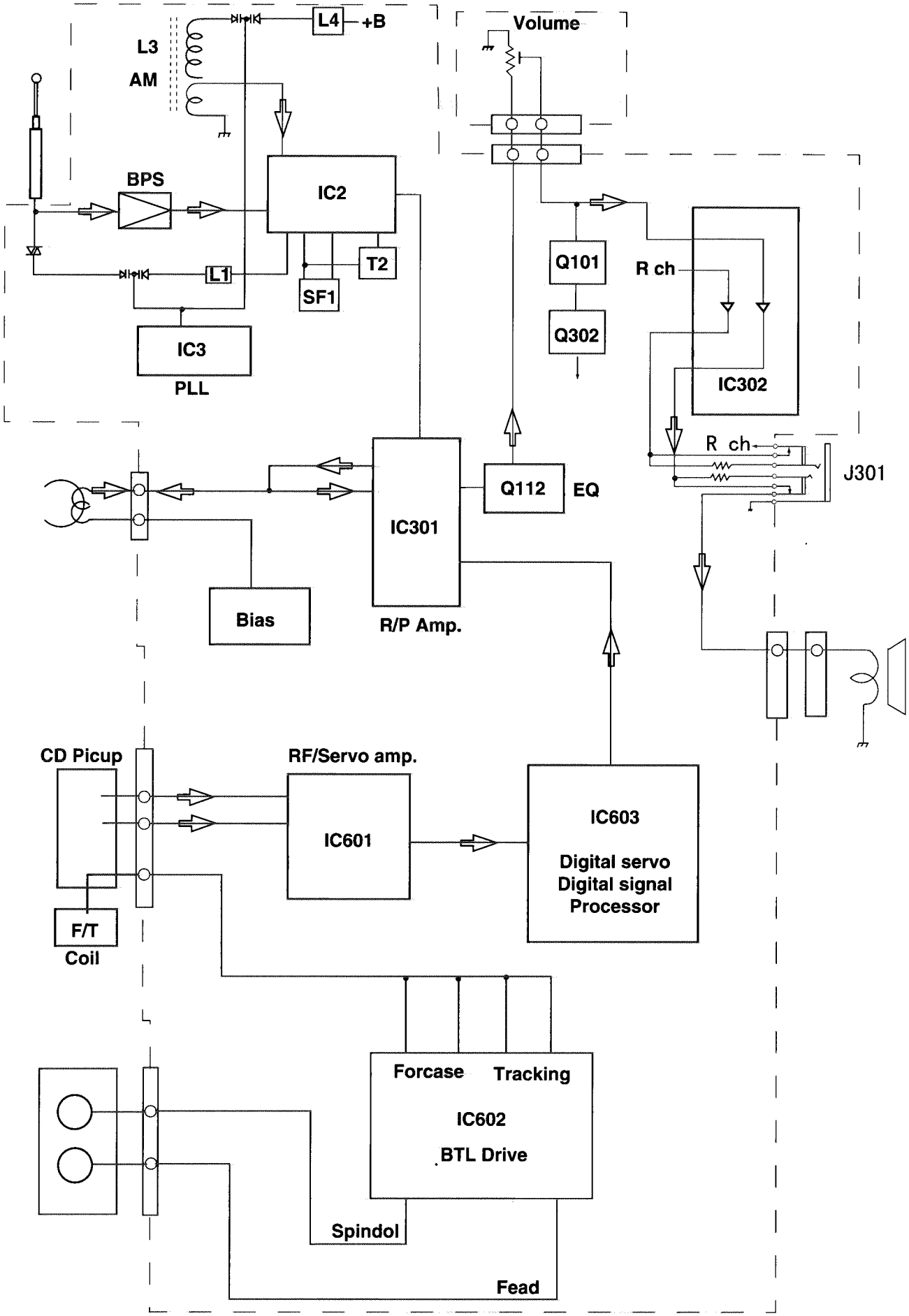

Block Diagram (for RC-QN2/QN3)

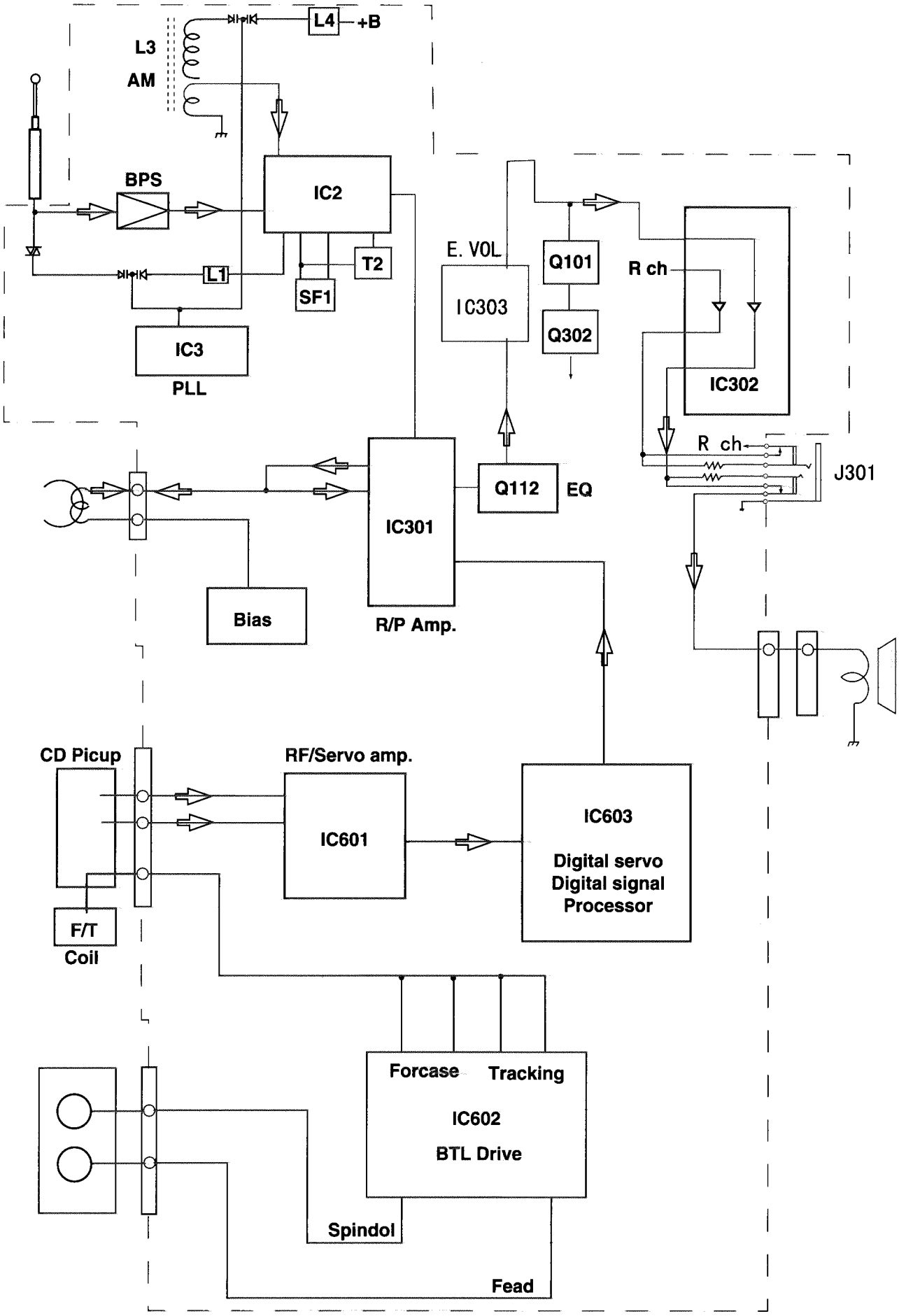

Standarad Scematic Diagram

■Amplifire circit for RC-QN3(U/US/UT/UX/UY version)

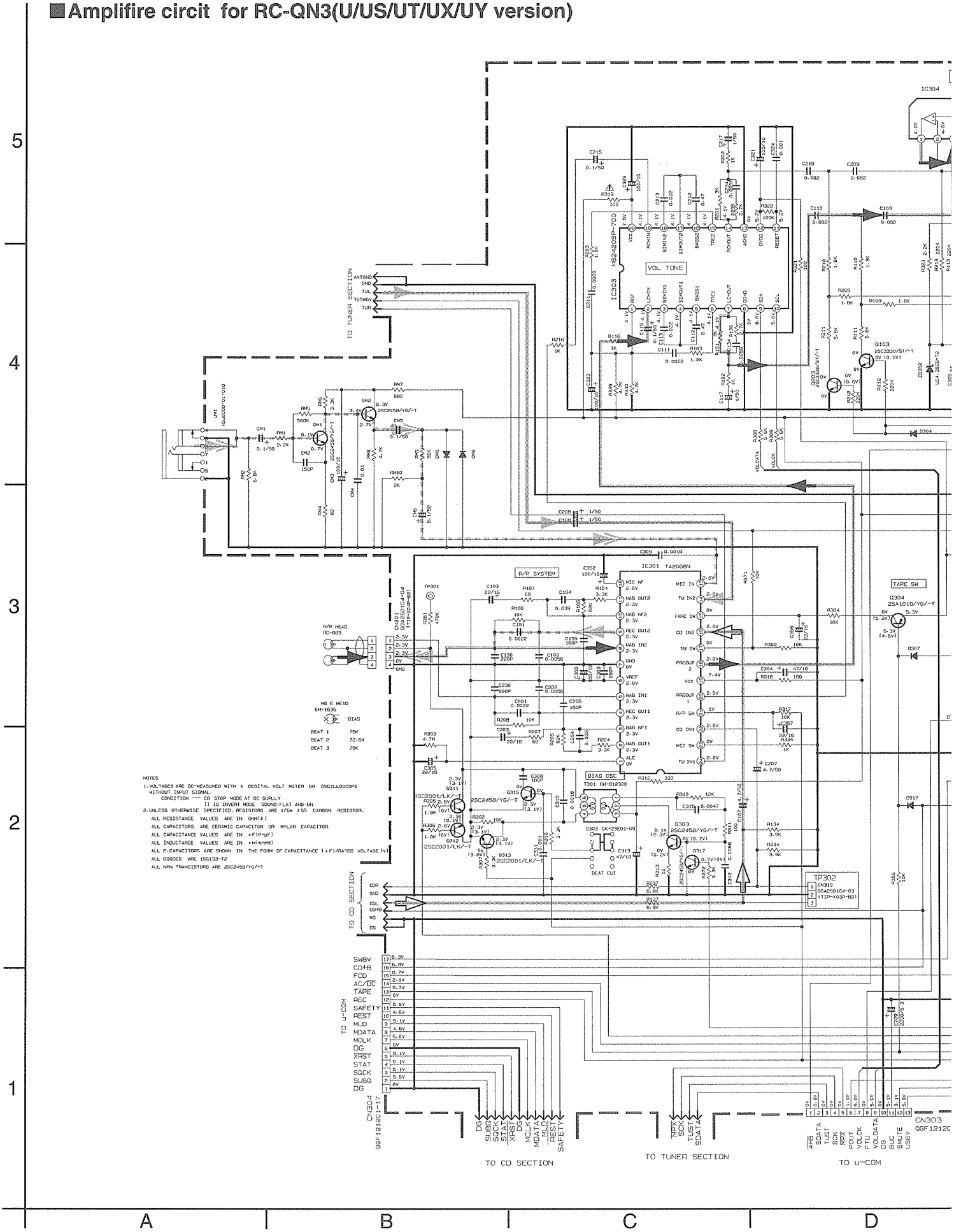

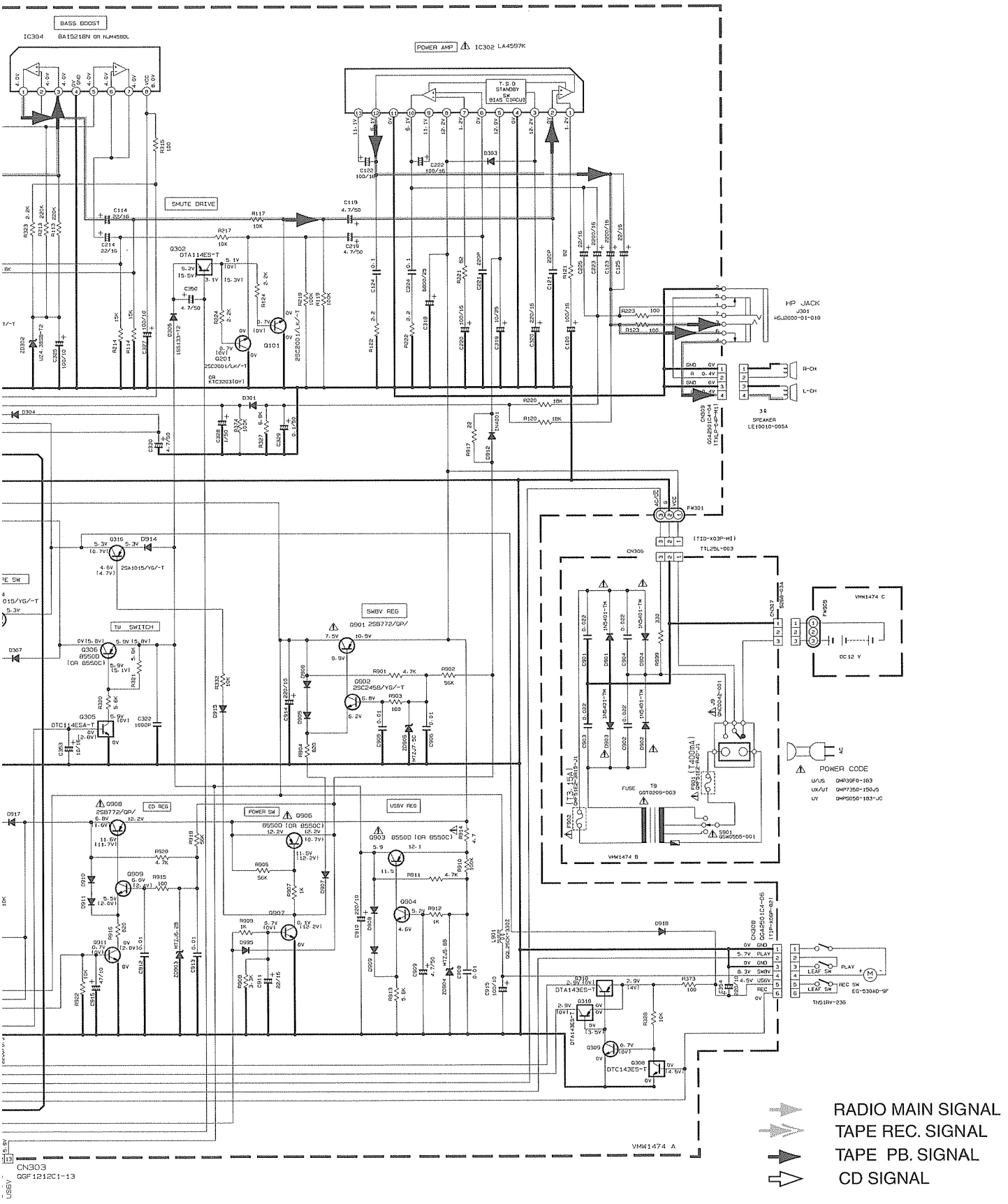
BASS BOOST
IC304 BA15218N OR NJM4580L
POWER AMP IC302 LA4597K
T.S.D STANDBY SW BIAS CIRCUIT
MUTE DRIVE
HP JACK
J301
HSJ2000-01-010
R-CH
L-CH
SPEAKER
LE10010-005A
SWBV REG
Q901 2SB772/QP/
TU SWITCH
CD REG
POWER SW
USBV REG
POWER CODE
UA/US DMP39F0-183
UX/UT DMP7350-150J5
UY DMPS050-183-JC
DC 12 V
LEAF SW
REC SW
PLAY
EG-030AD-9F
TN51RV-236
VMW1474 A
VMW1474 B
VMW1474 C
CN303
QGF1212C1-13
RADIO MAIN SIGNAL
TAPE REC. SIGNAL
TAPE PB. SIGNAL
CD SIGNAL

system control circuit RC-QN1 only

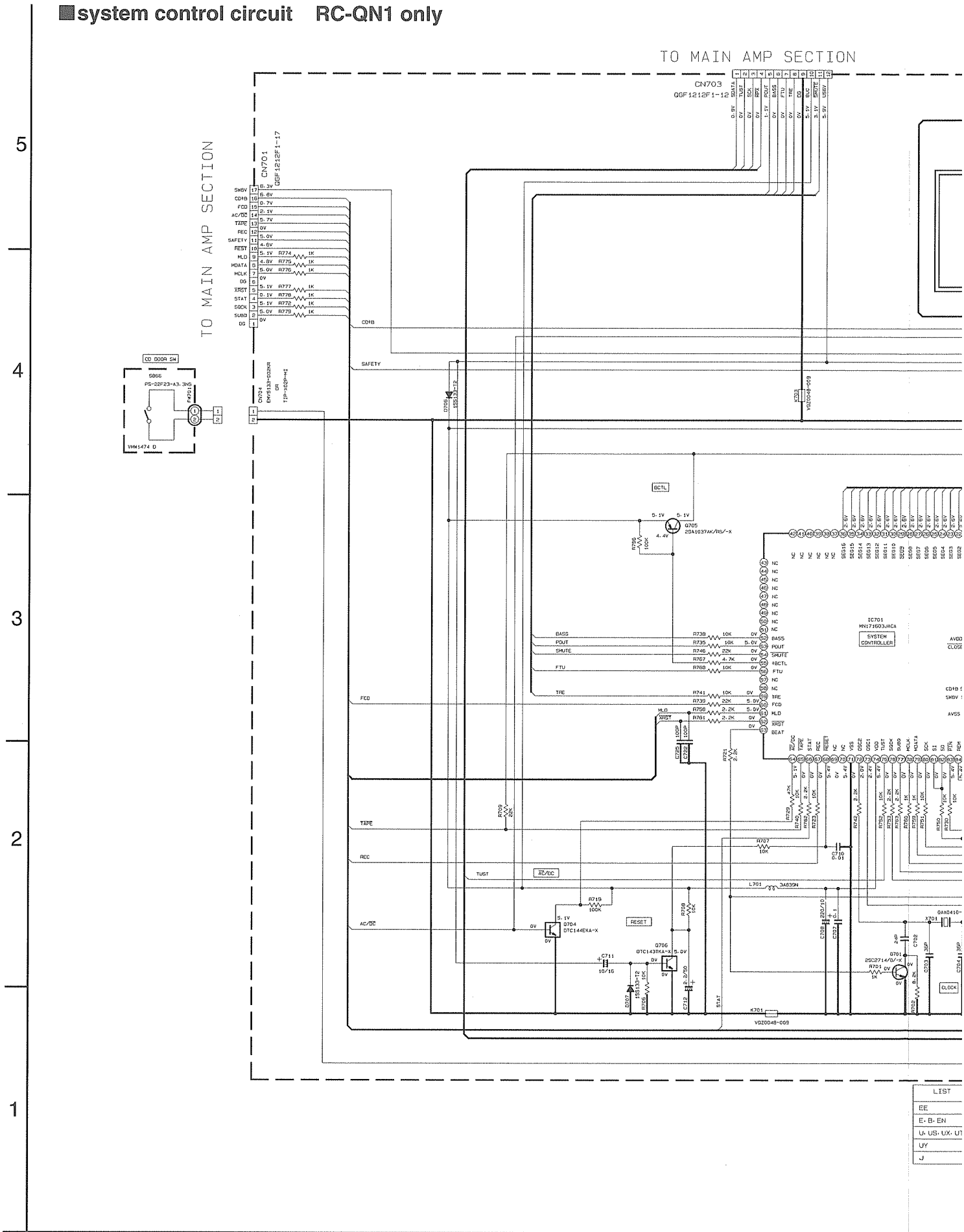

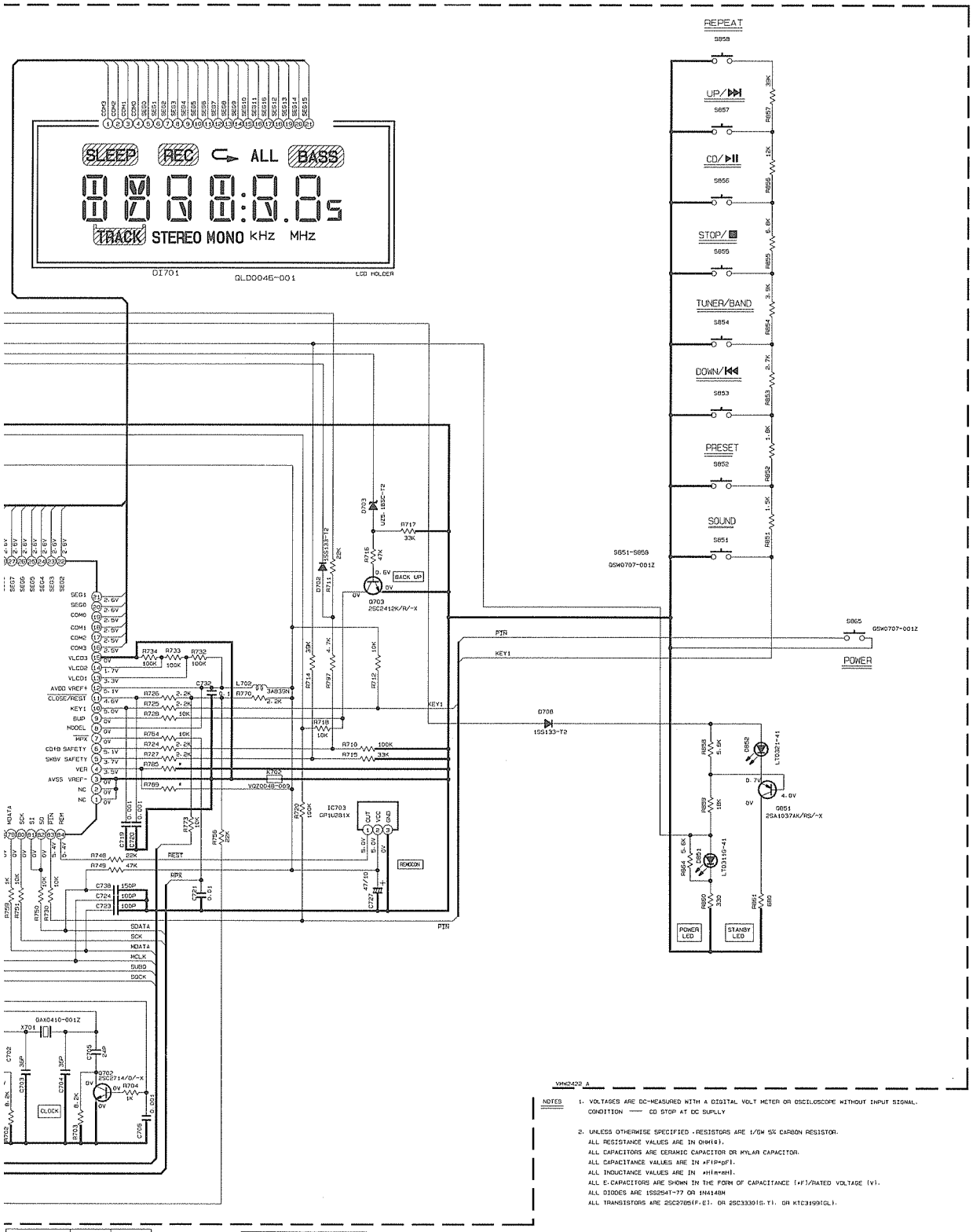

NOTES

1. VOLTAGES ARE DC-MEASURED WITH A DIGITAL VOLT METER OR OSCILOSCOPE WITHOUT INPUT SIGNAL.
   CONDITION —— CD STOP AT DC SUPLLY

2. UNLESS OTHERWISE SPECIFIED ·RESISTORS ARE 1/6W 5% CARBON RESISTOR.
   ALL RESISTANCE VALUES ARE IN OHM(Ω).
   ALL CAPACITORS ARE CERAMIC CAPACITOR OR MYLAR CAPACITOR.
   ALL CAPACITANCE VALUES ARE IN ×F(P=pF).
   ALL INDUCTANCE VALUES ARE IN ×H(m=mH).
   ALL E·CAPACITORS ARE SHOWN IN THE FORM OF CAPACITANCE (×F)/RATED VOLTAGE (V).
   ALL DIODES ARE 1SS254T-77 OR 1N4148M
   ALL TRANSISTORS ARE 2SC2705(F.E). OR 2SC3330(S.T). OR KTC3199(GL).

LIST	R789	R785
EE	10K	150K
E·B·EN	10K	22K
U·US·UX·UT	10K	8.2K
UY	10K	2.2K
J	----	2.2K

PARTS NAME	CONSTRUCTION
DTC143TKA	4.7K
DTC144EKA	47K 47K

D E F G H

CD Amplifire circuit

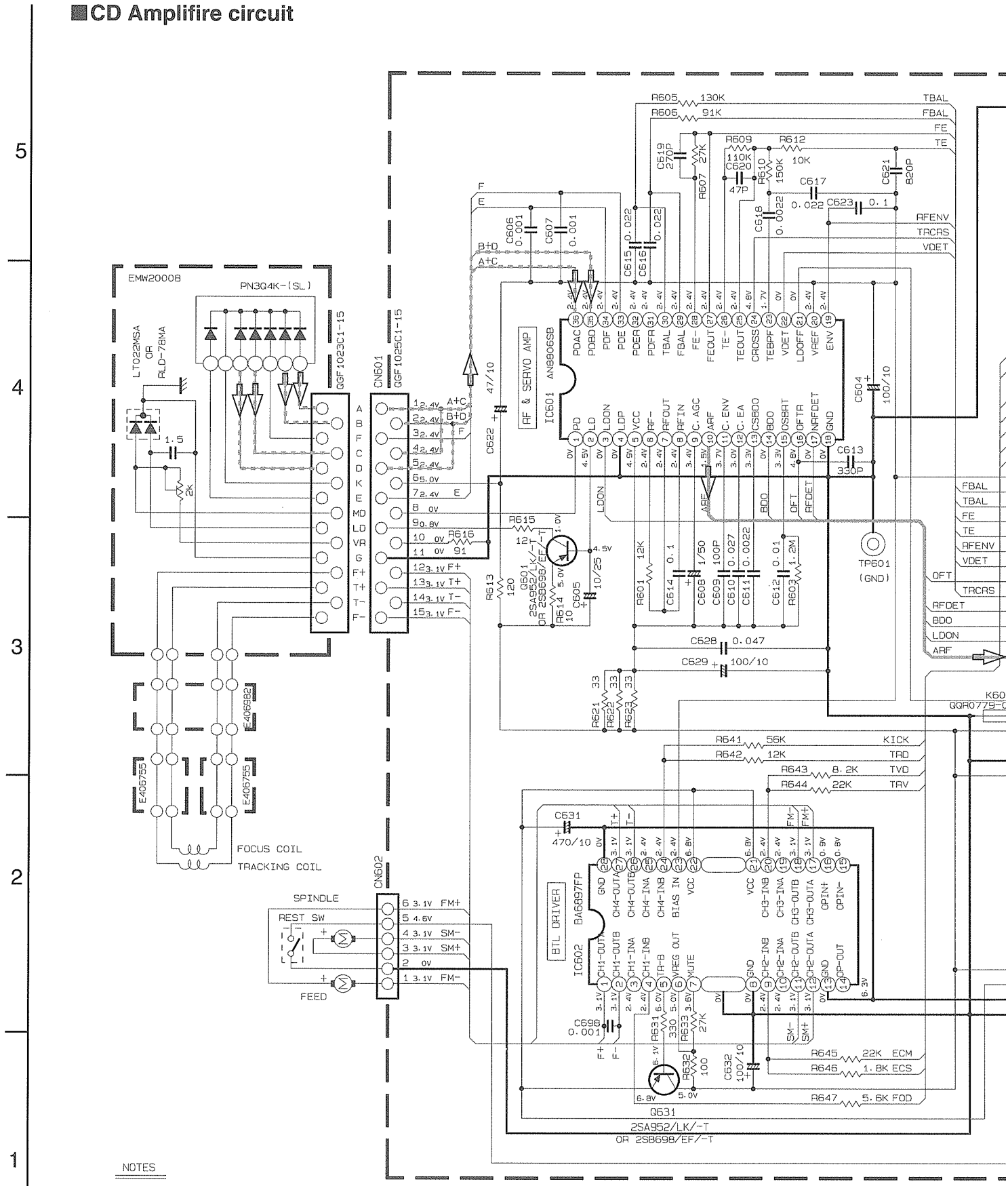

NOTES

1. VOLTAGES ARE DC-MEASURED WITH A DIGITAL VOLT METER
2. UNLESS OTHERWISE SPECIFIED, RESISTORS ARE 1/6W ±5% CARBON RESISTOR.
   ALL RESISTANCE VALUES ARE IN OHM(Ω).
   ALL CAPACITORS ARE CERAMIC CAPACITOR OR MYLAR CAPACITOR.
   ALL CAPACITANCE VALUES ARE IN μF(P=pF).
   ALL E.CAPACITORS ARE SHOWN IN THE FORM OF CAPACITANCE (μF)/RATED VOLTAGE (V).

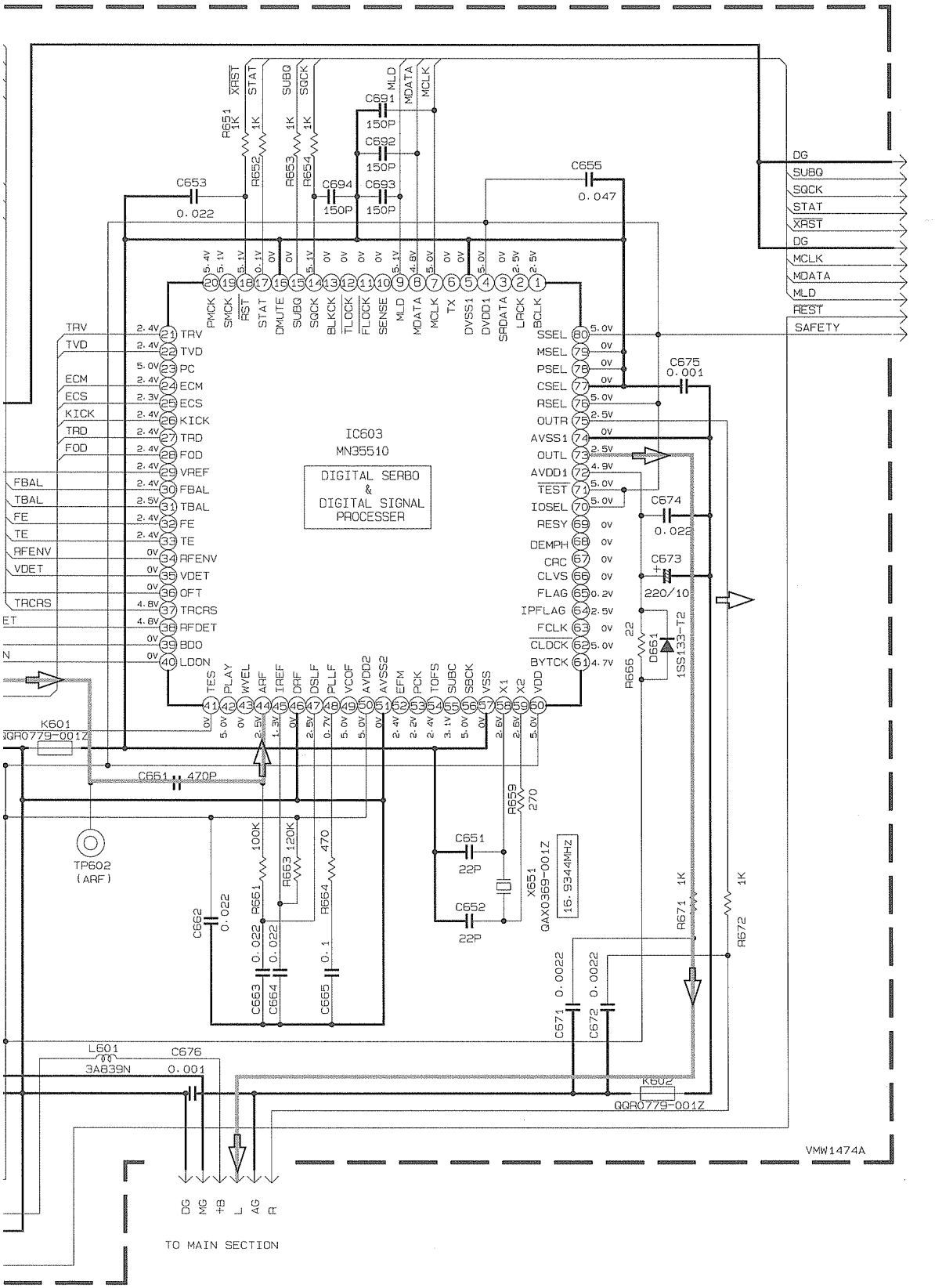
IC603
MN35510
DIGITAL SERBO
&
DIGITAL SIGNAL
PROCESSER
TO MAIN SECTION
VMW1474A
K601
QQR0779-001Z
K602
QQR0779-001Z
X651
QAX0369-001Z
16.9344MHz
TP602
(ARF)
L601
3A839N
C676
0.001
C653
0.022
C655
0.047
C675
0.001
C674
0.022
C673
220/10
C661
470P
C651
22P
C652
22P
C691
150P
C692
150P
C693
150P
C694
150P
R651
1K
R652
1K
R653
1K
R654
1K
R659
270
R661
100K
R663
120K
R664
470
R665
22
R671
1K
R672
1K
D651
1SS133-T2
C662
0.022
C663
0.022
C664
0.022
C665
0.1
C671
0.0022
C672
0.0022
DG
SUBQ
SQCK
STAT
XRST
MCLK
MDATA
MLD
REST
SAFETY
DG
MG
+B
L
AG
R
TO MAIN SECTION

CD SIGNAL

Tuner circuit for B/E/EN/J/U/US/UT/UX/UY version

	PIN NO	1	2	3	4	5	6	7	8	9	10	11	12
IC2	FM NO SIGNAL	0.8	0	0.7	1.1	5.0	5.0	5.0	0	3.6	5.0	1.6	1.5
	FM 60dB STEREO	0.8	0	0.7	1.9	5.0	5.0	4.0	0	3.6	5.0	1.6	1.5
	AM NO SIGNAL	0	0	0.3	1.3	5.0	5.0	5.0	0	4.1	4.3	1.6	1.5
IC3	FM NO SIGNAL	2.4	0	0	5.0	5.0	5.0	3.6	3.6	0.1	0.1	0.1	0

	PIN NO	13	14	15	16	17	18	19	20	21	22	23	24
IC2	FM NO SIGNAL	4.4	3.6	3.6	1.4	1.5	3.6	4.0	5.0	5.0	5.0	5.0	5.0
	FM 60dB STEREO	4.4	3.6	3.6	1.4	1.6	3.6	4.0	5.0	5.0	5.0	5.0	5.0
	AM NO SIGNAL	4.5	0	0	1.4	1.4	3.6	4.1	5.0	5.0	5.0	5.0	5.0
IC3	FM NO SIGNAL	3.6	0.1	0	2.5	5.0	1.0	1.0	0.8	0	2.3		

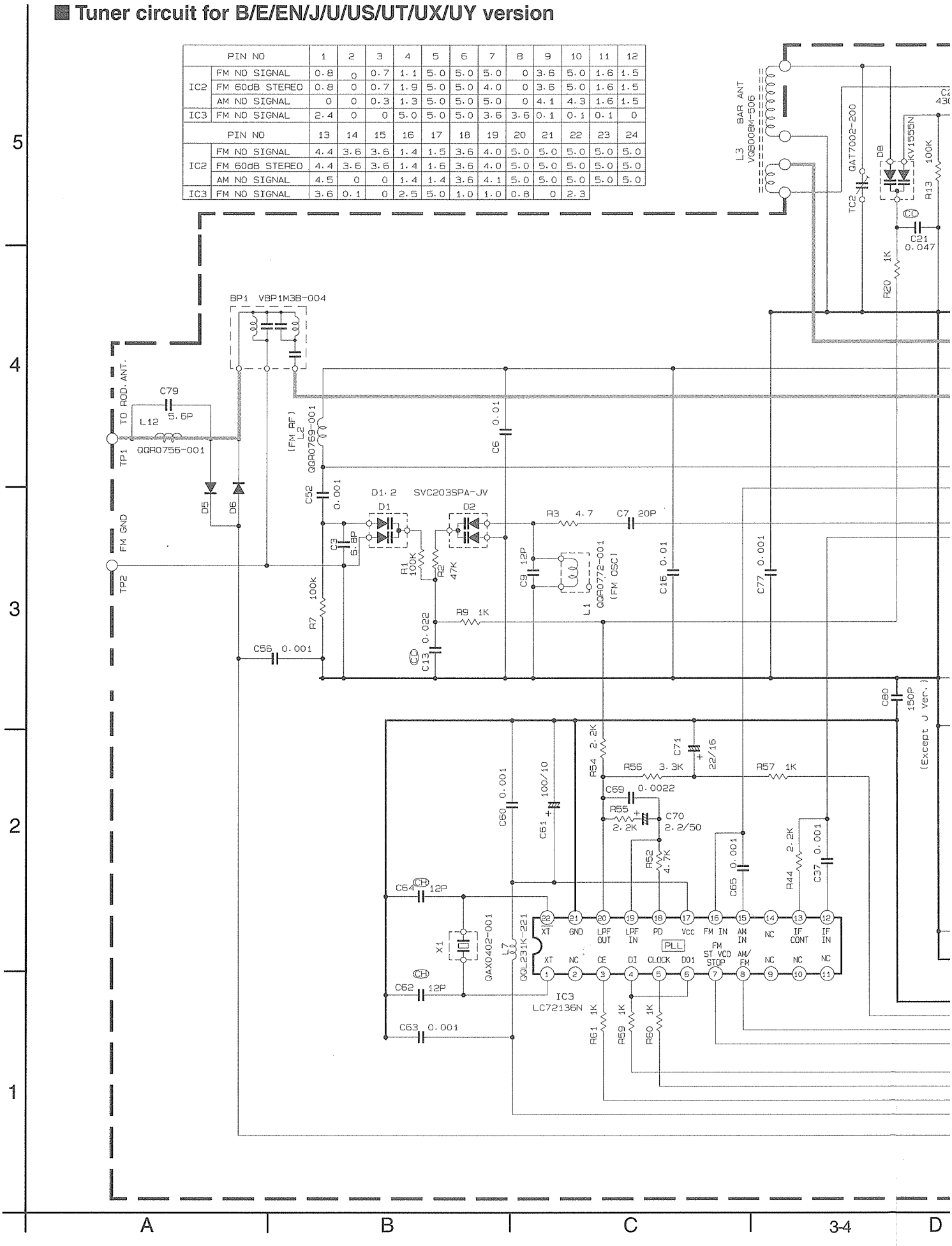

A B C 3-4 D

NOTES

1. VOLTAGES OF THE TABLE ARE DC-MEASURED WITH A DIGITAL VOLT METER.
2. ALL RESISTORS ARE 1/6W ±5% CARBON RESISTOR.
3. ALL RESISTANCE VALUES ARE IN OHM (Ω).
4. ALL CAPACITANCE VALUES ARE IN μF (P=pF).
5. ALL E.CAPACITORS ARE SHOWN IN THE FORM OF CAPACITANCE (μF)/RATED VOLTAGE (V).
6. ALL INDUCTANCE VALUES ARE IN μH(m=mH).
7. SI.DIODES(▶|) ARE ALL 1SS133T

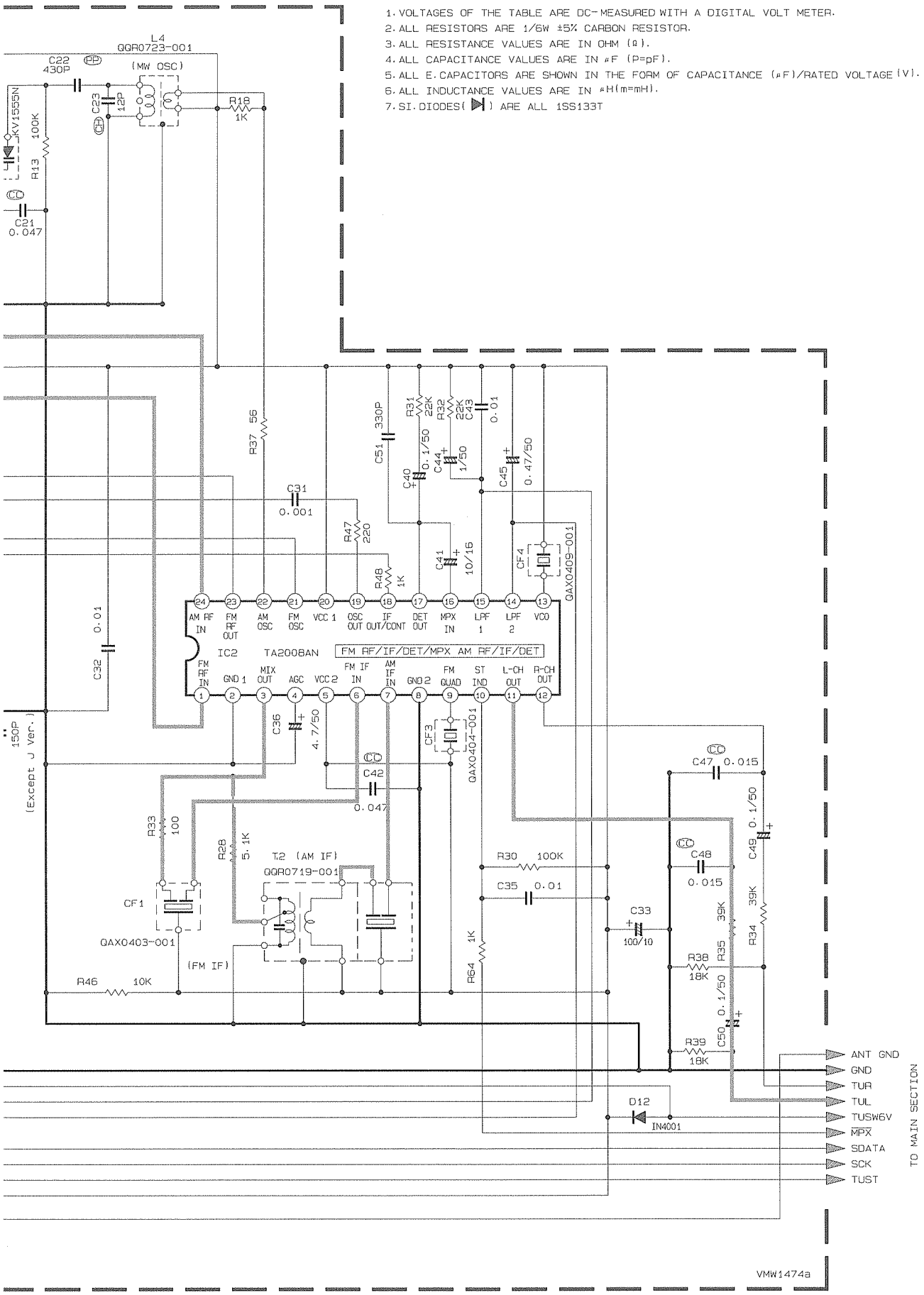

D E F G H

Tuner circuit for RC-QN1 (EE version)

	PIN NO	1	2	3	4	5	6	7	8	9	10	11	12
IC2	FM NO SIGNAL	0.8	0	0.7	1.1	5.0	5.0	5.0	0	3.6	5.0	1.6	1.5
	FM 60dB STEREO	0.8	0	0.7	1.9	5.0	5.0	4.0	0	3.6	5.0	1.6	1.5
	AM NO SIGNAL	0	0	0.3	1.3	5.0	5.0	5.0	0	4.1	4.3	1.6	1.5
IC3	FM NO SIGNAL	2.4	0	0	5.0	5.0	5.0	3.6	3.6	0.1	0.1	0.1	0

	PIN NO	13	14	15	16	17	18	19	20	21	22	23	24
IC2	FM NO SIGNAL	4.4	3.6	3.6	1.5	1.4	3.6	4.0	5.0	5.0	5.0	5.0	5.0
	FM 60dB STEREO	4.4	3.6	3.6	1.4	1.6	3.6	4.0	5.0	5.0	5.0	5.0	5.0
	AM NO SIGNAL	4.5	0	0	1.4	1.4	3.6	4.1	5.0	5.0	5.0	5.0	5.0
IC3	FM NO SIGNAL	3.6	0.1	0	2.5	5.0	1.0	1.0	0.8	0	2.3		

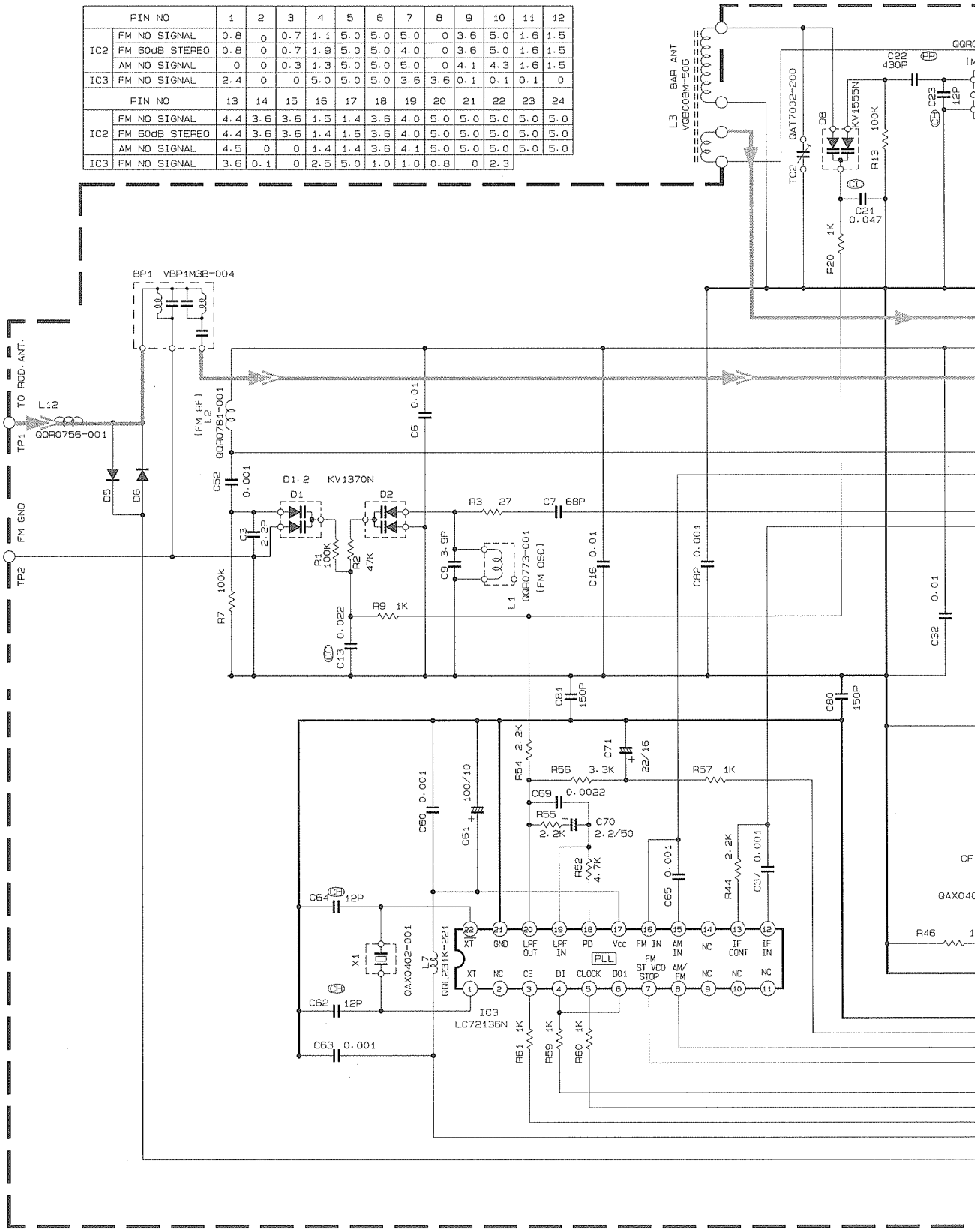

NOTES

1. VOLTAGES OF THE TABLE ARE DC-MEASURED WITH A DIGITAL VOLT METER.
2. ALL RESISTORS ARE 1/6W ±5% CARBON RESISTOR.
3. ALL RESISTANCE VALUES ARE IN OHM (Ω).
4. ALL CAPACITANCE VALUES ARE IN μF (P=pF).
5. ALL E.CAPACITORS ARE SHOWN IN THE FORM OF CAPACITANCE (μF)/RATED VOLTAGE (V).
6. ALL INDUCTANCE VALUES ARE IN μH(m=mH).
7. SI.DIODES(▶|) ARE ALL 1SS133T

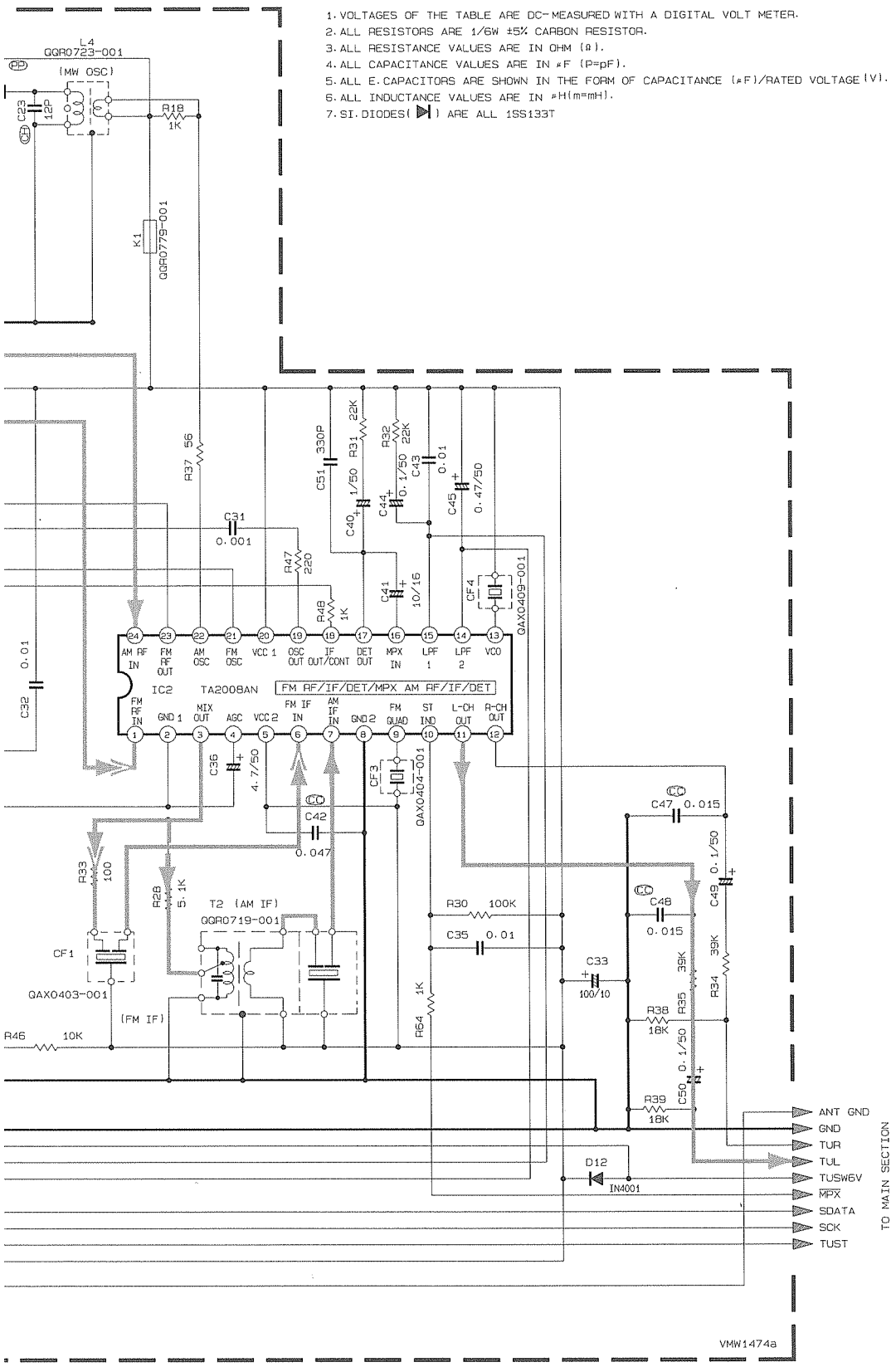

AM/RADIO SIGNAL

FM SIGNAL

■Amplifire circit for RC-QN1(B/J/E/EN/EE version)

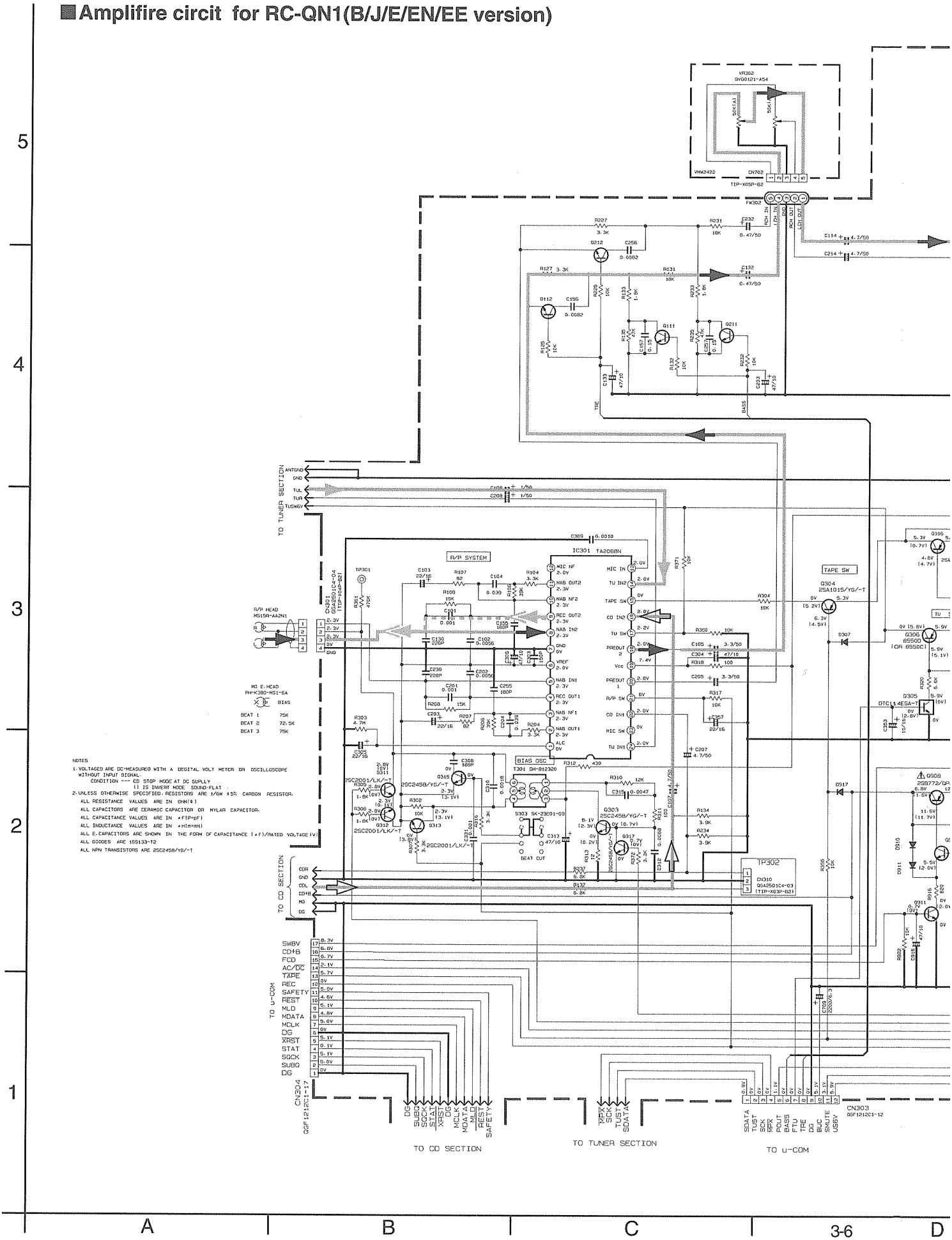

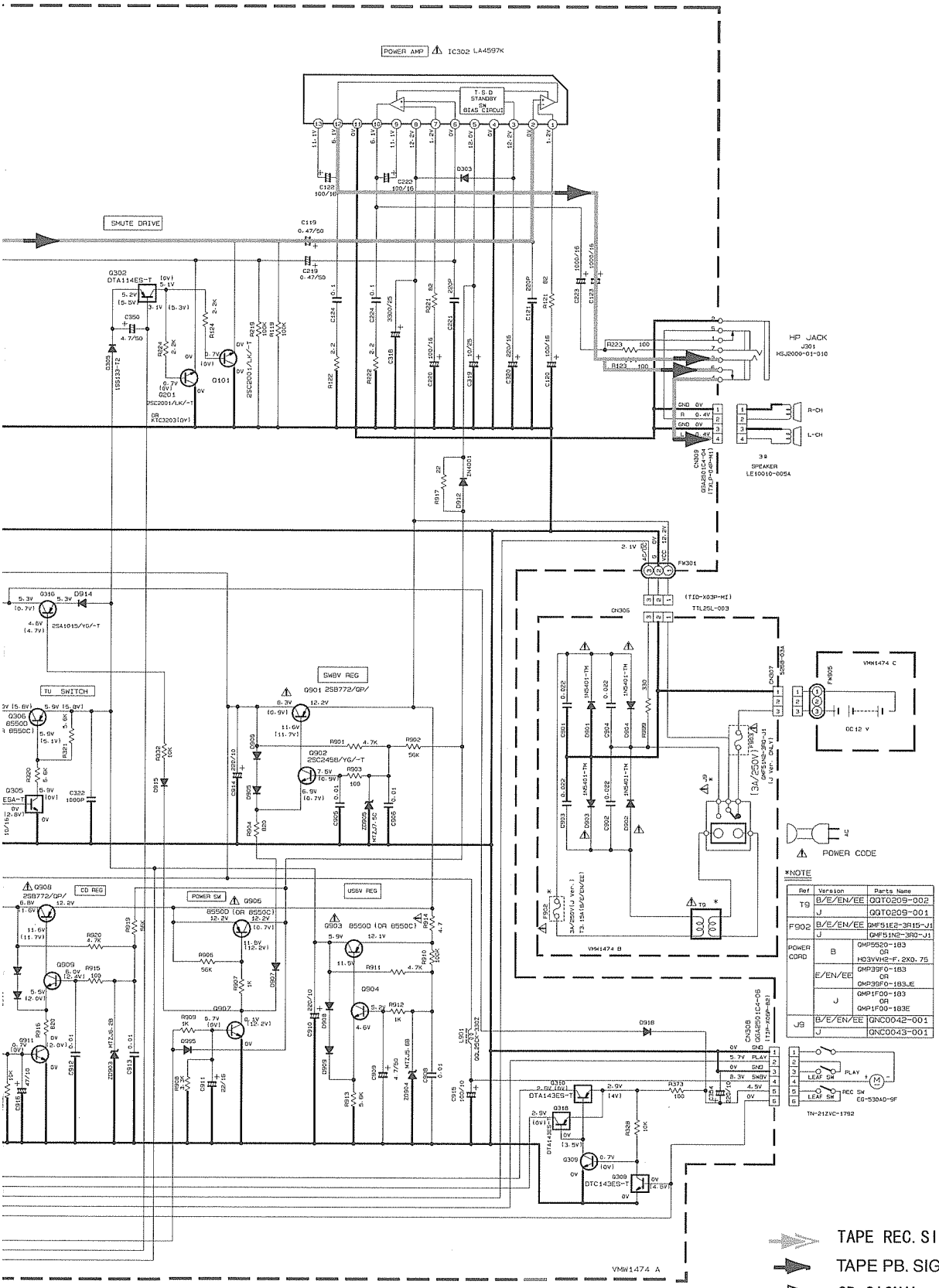

*NOTE

Ref	Version	Parts Name
T9	B/E/EN/EE	QQT0209-002
	J	QQT0209-001
F902	B/E/EN/EE	QMF51E2-3R15-J1
	J	QMF51N2-3R0-J1
POWER CORD	B	QMP5520-183 OR HO3VVH2-F.2X0.75
	E/EN/EE	QMP39F0-183 OR QMP39F0-183JE
	J	QMP1F00-183 OR QMP1F00-183E
J9	B/E/EN/EE	QNC0042-001
	J	QNC0043-001

TAPE REC. SIGNAL

TAPE PB. SIGNAL

CD SIGNAL

RAIDIO MAIN SIGNAL

⚠ Parts are safety assurance parts. When replacing those parts make sure to use the specified one.

D | E | F | G | H

Amplifire circit for RC-QN2(U/US/UX/UY version)

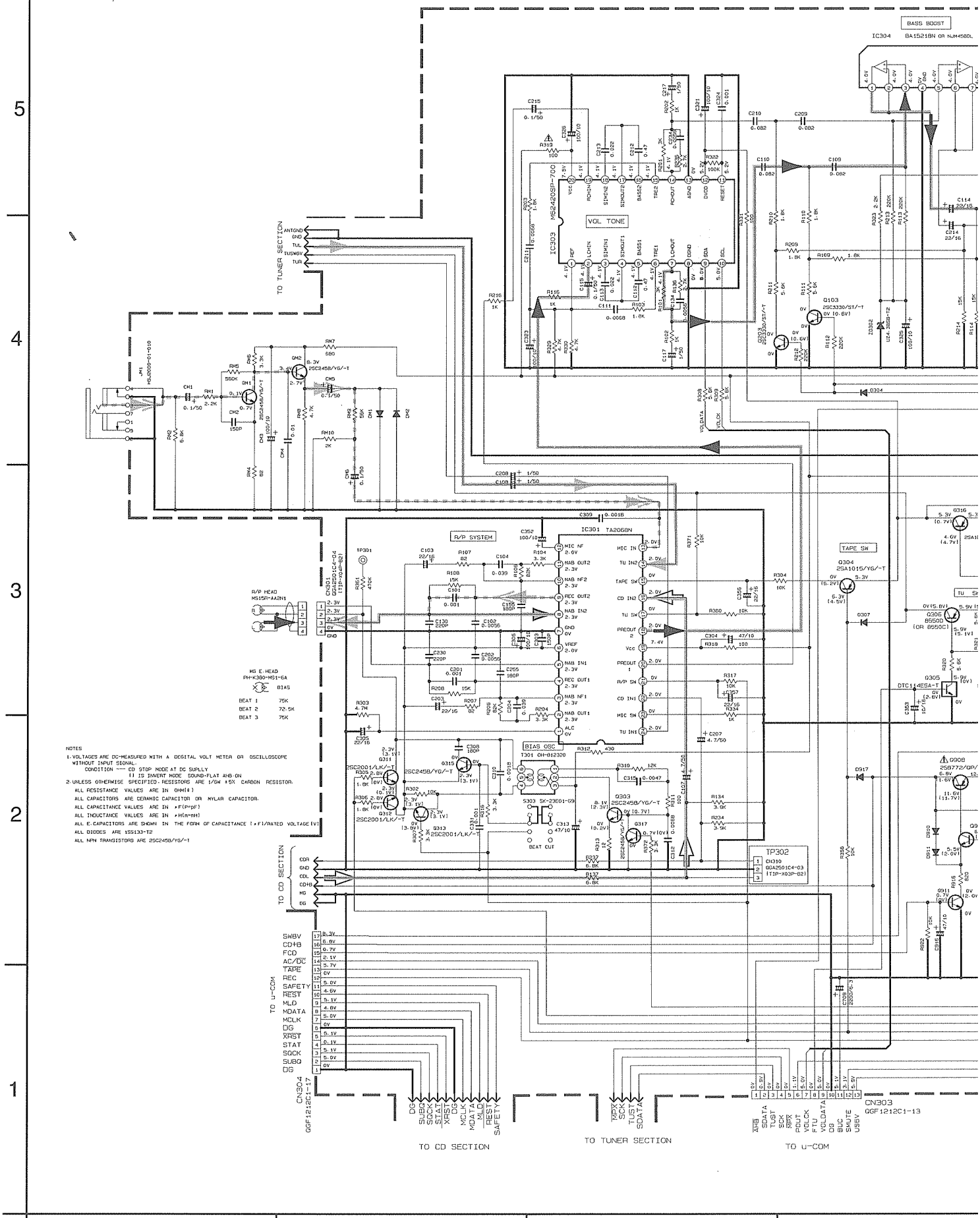

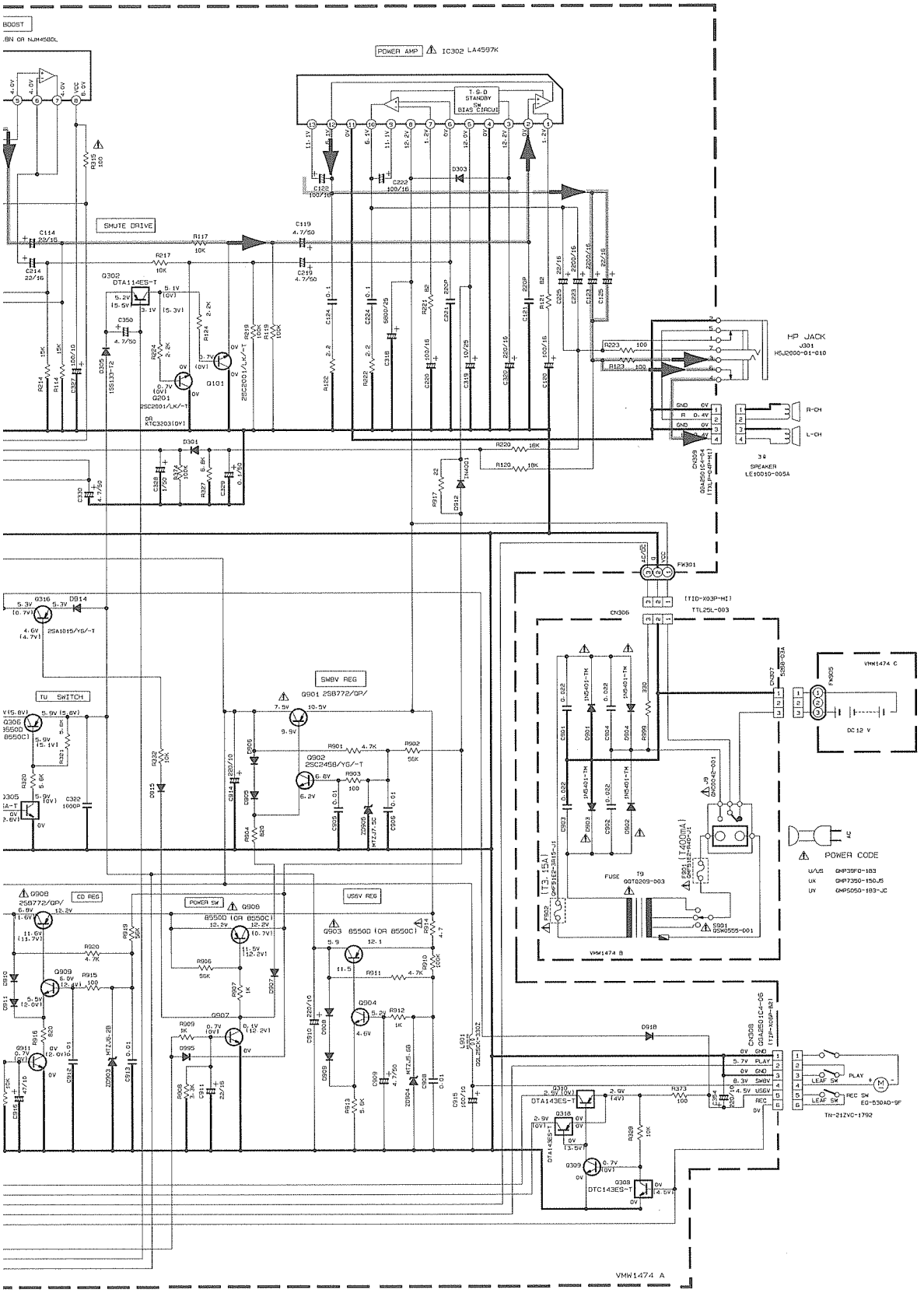

RADIO MAIN SIGNAL
TAPE REC. SIGANAL

TAPE PB SIGNAL

CD SIGNAL

System control circuit for RC-QN2/QN3

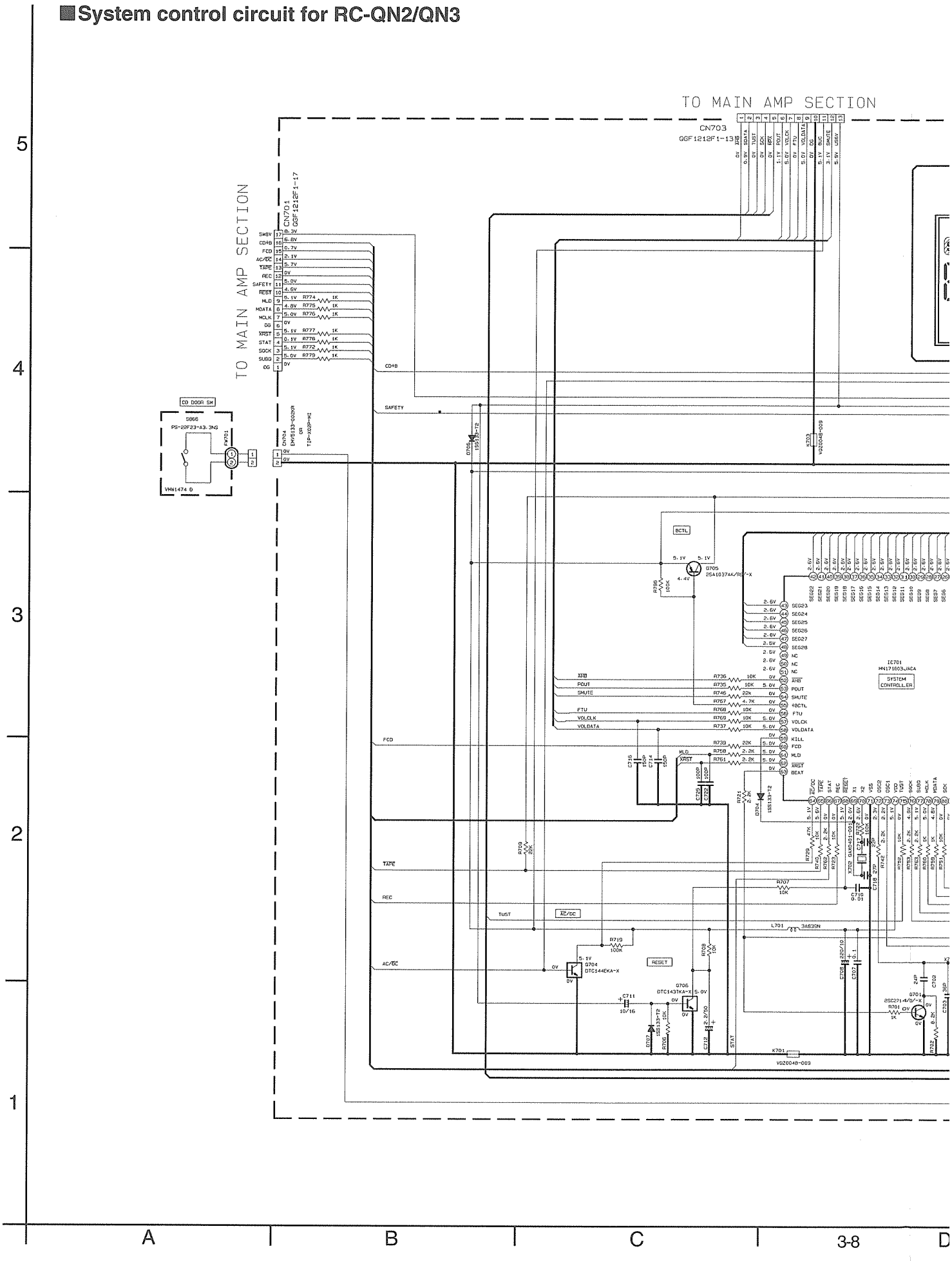

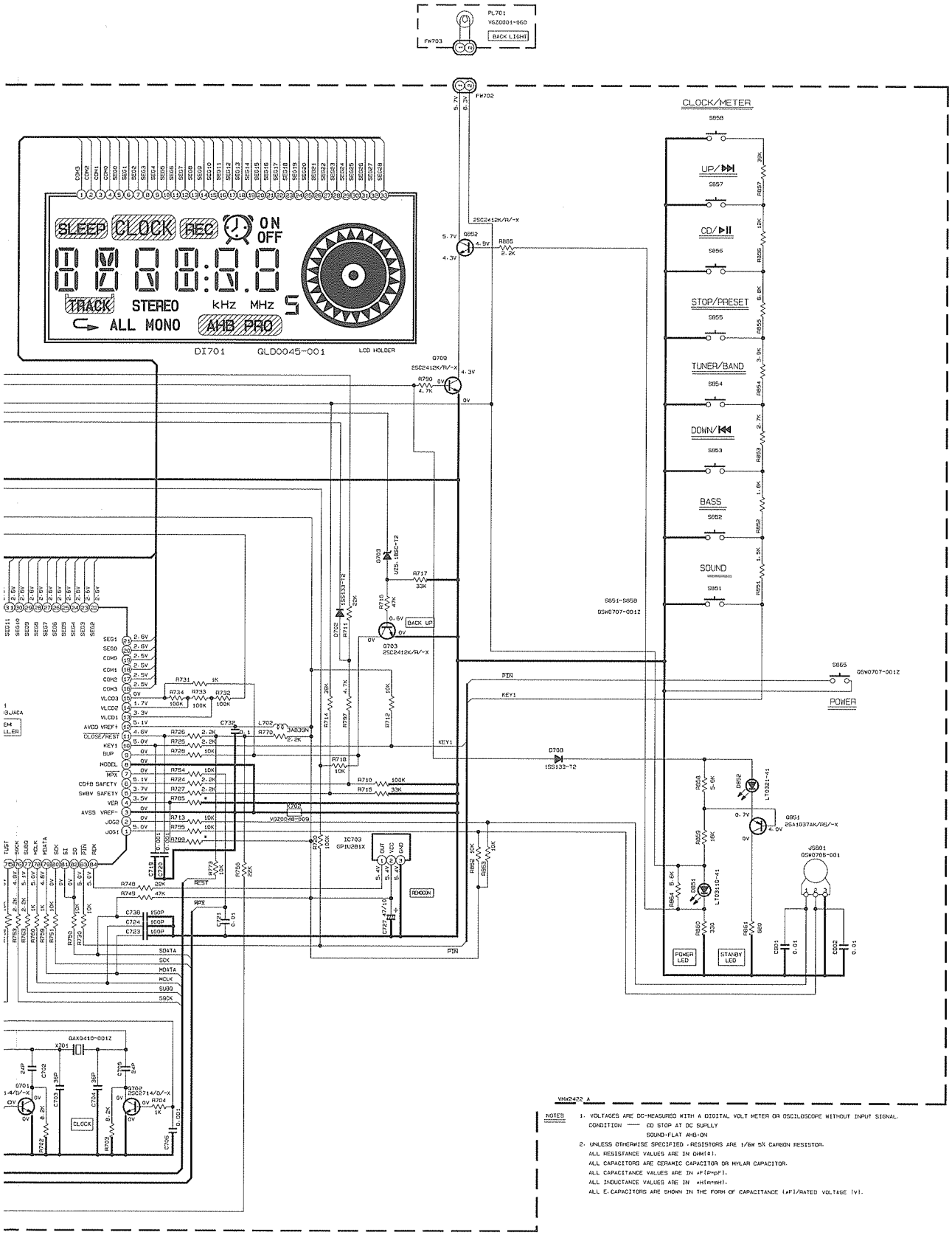

NOTES

1. VOLTAGES ARE DC-MEASURED WITH A DIGITAL VOLT METER OR OSCILOSCOPE WITHOUT INPUT SIGNAL.
   CONDITION ---- CD STOP AT DC SUPPLY
   SOUND·FLAT AHB·ON
2. UNLESS OTHERWISE SPECIFIED ·RESISTORS ARE 1/6W 5% CARBON RESISTOR.
   ALL RESISTANCE VALUES ARE IN OHM(Ω).
   ALL CAPACITORS ARE CERAMIC CAPACITOR OR MYLAR CAPACITOR.
   ALL CAPACITANCE VALUES ARE IN μF(P=pF).
   ALL INDUCTANCE VALUES ARE IN μH(m=mH).
   ALL E.CAPACITORS ARE SHOWN IN THE FORM OF CAPACITANCE (μF)/RATED VOLTAGE (V).

LIST	R789	R785
E·B·EN	10K	22K
U·US·UX·UT	10K	8.2K
UY	10K	2.2K
J	---	2.2K

PARTS NAME	CONSTRUCTION
DTC143TKA	4.7K
DTC144EKA	47K 47K

D E F G H

Amplifire circit for RC-QN3(B/E/EN version)

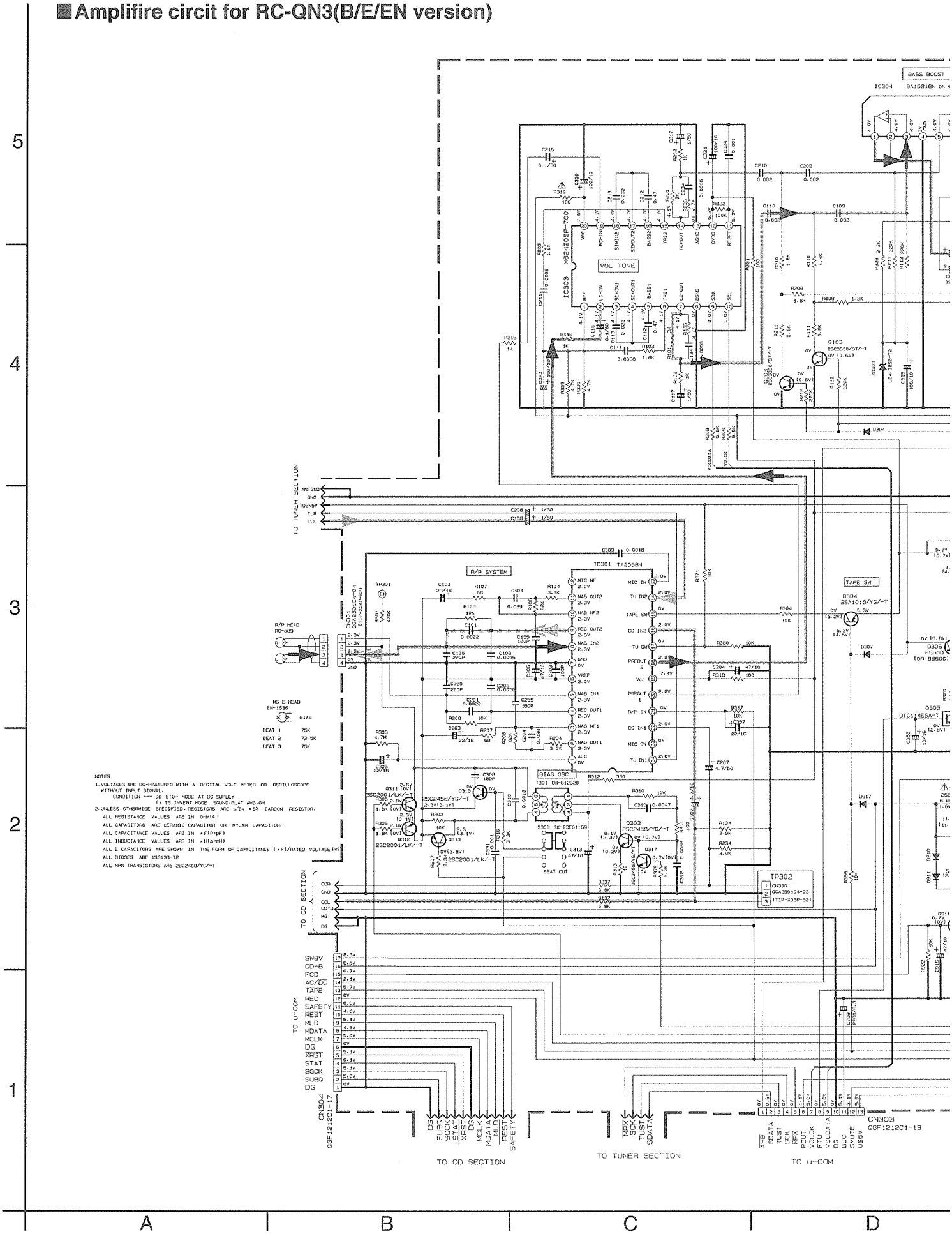

A B C D

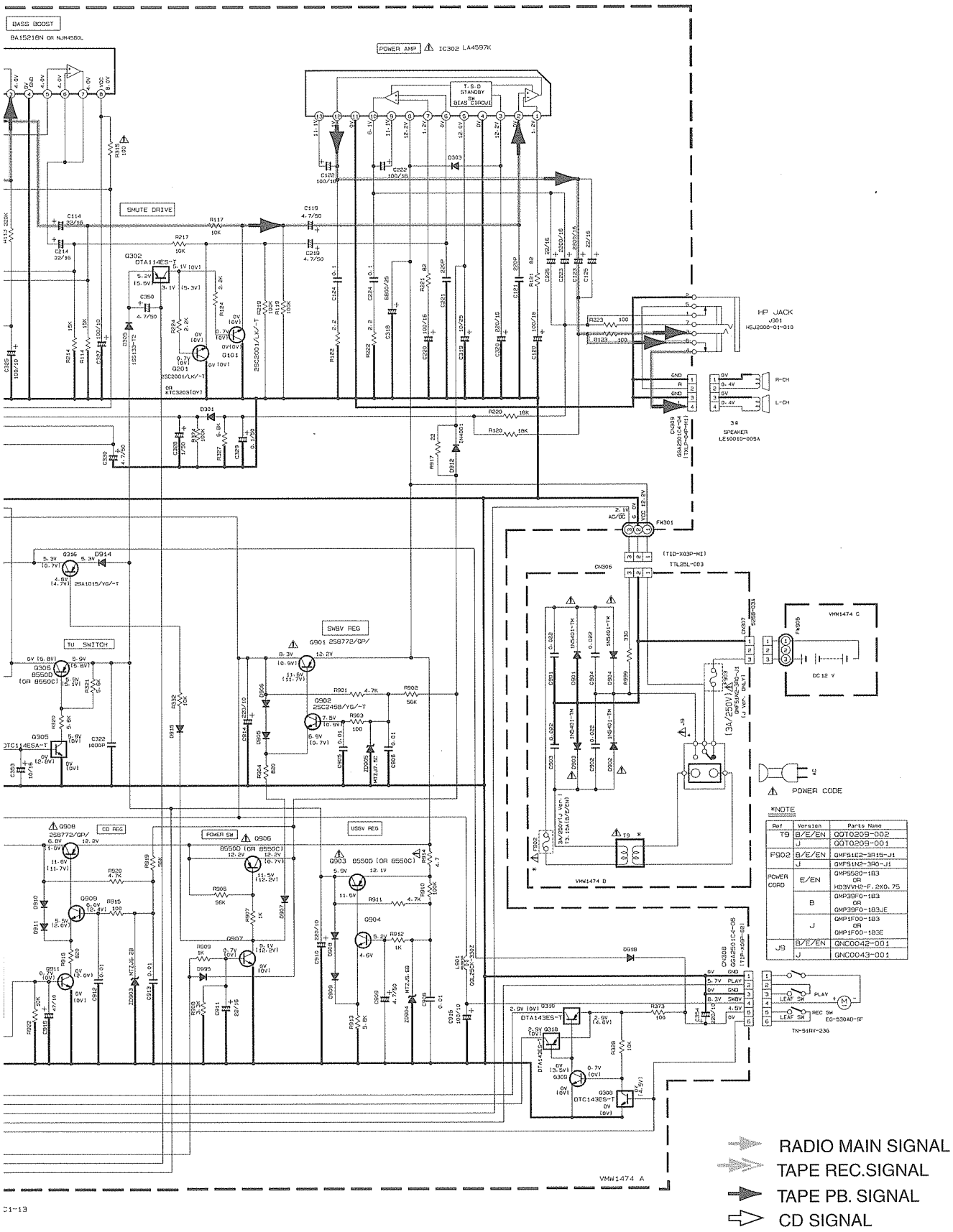

*NOTE

Ref	Version	Parts Name
T9	B/E/EN	QQT0209-002
	J	QQT0209-001
F902	B/E/EN	QMF51E2-3R15-J1
	J	QMF51N2-3R0-J1
POWER CORD	E/EN	QMP5520-183 OR H03VVH2-F.2X0.75
	B	QMP39F0-183 OR QMP39F0-183JE
	J	QMP1F00-183 OR QMP1F00-183E
J9	B/E/EN	QNC0042-001
	J	QNC0043-001

Location of P.C.Board Parts

■ Main P.C.Board (VMW1474 Back side) :Block No 0 1

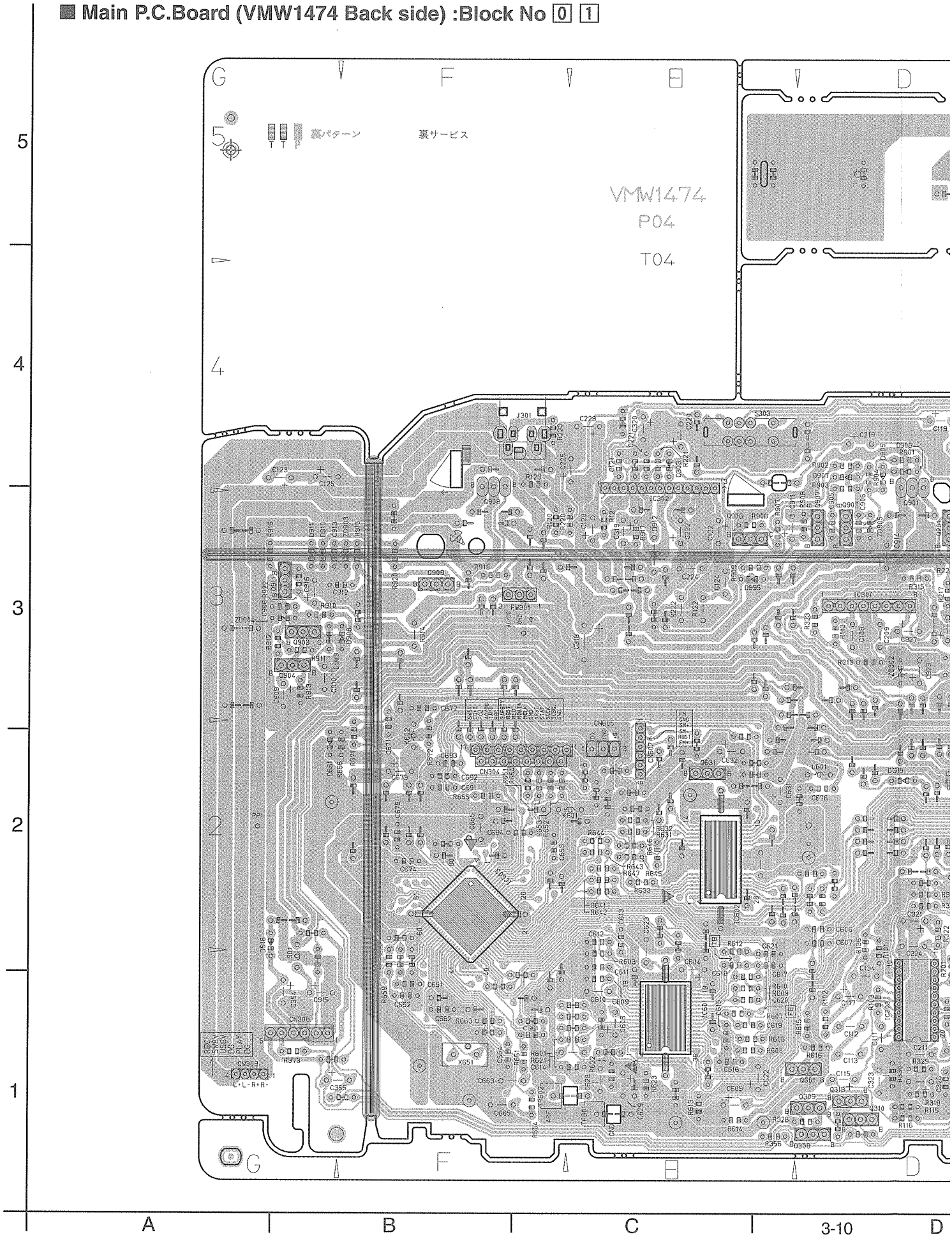

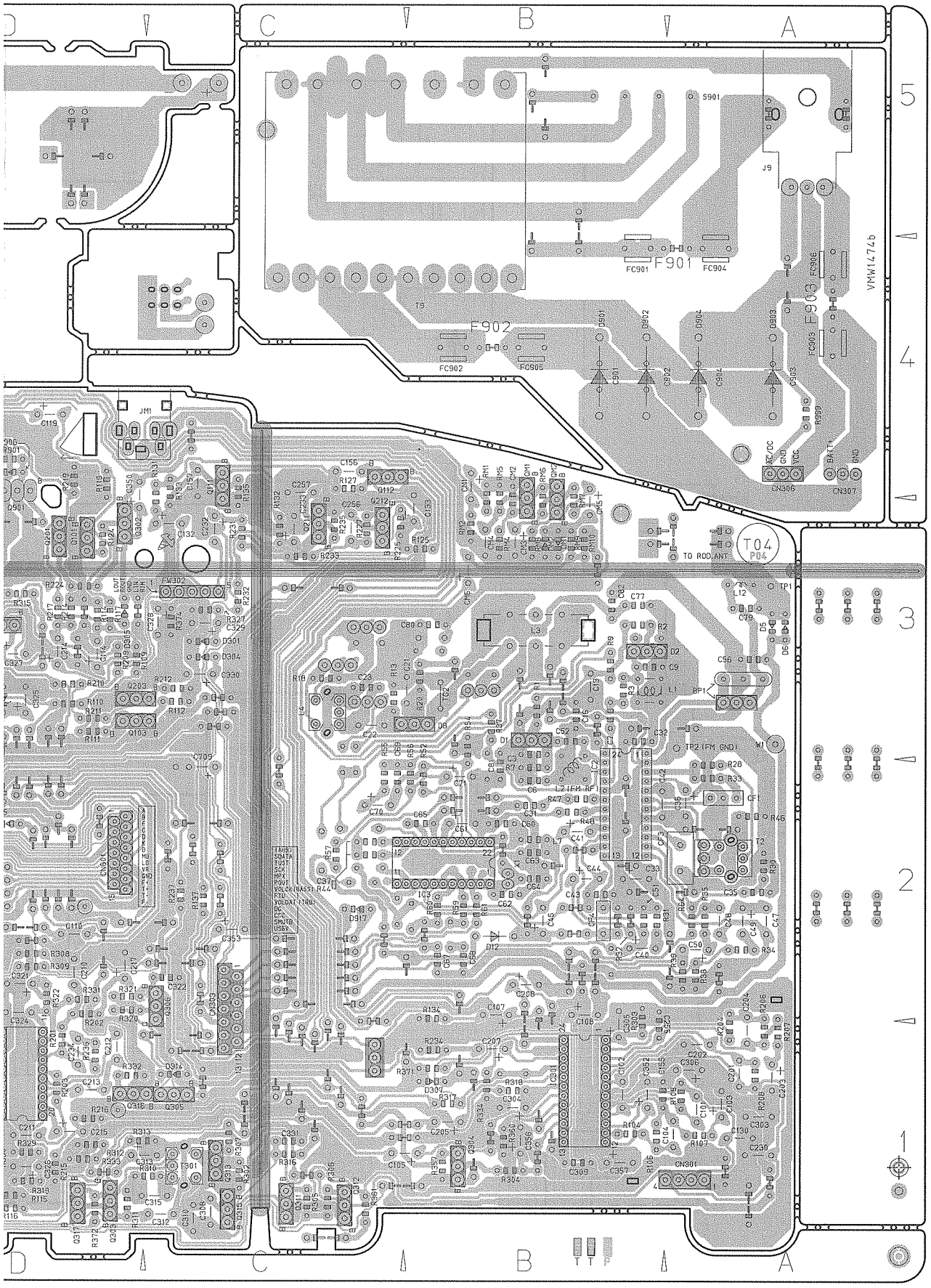
VMW1474b
F901
F902
F903
FC901
FC902
FC903
FC904
FC905
FC906
S901
J9
T9
CN306
CN307
CN301
JM1
TO ROD ANT
T04
P04
BP1
TP1
TP2 (FM GND)
M1
L2 (FM RF)
L1
L3
IC3
IC1
IC2
Q301
Q302
Q303
Q304
Q305
Q306
Q307
Q308
Q309
Q310
Q311
Q312
Q313
Q314
Q315
Q316
Q317
Q318
Q319
Q320
Q321
Q322
Q323
Q324
Q325
Q326
Q327
Q328
Q329
Q330
Q331
Q332
Q333
Q334
Q335
Q336
Q337
Q338
Q339
Q340

■ System CPU Board for RC-QN1 (VMW2422 Back side) :Block No 0 2

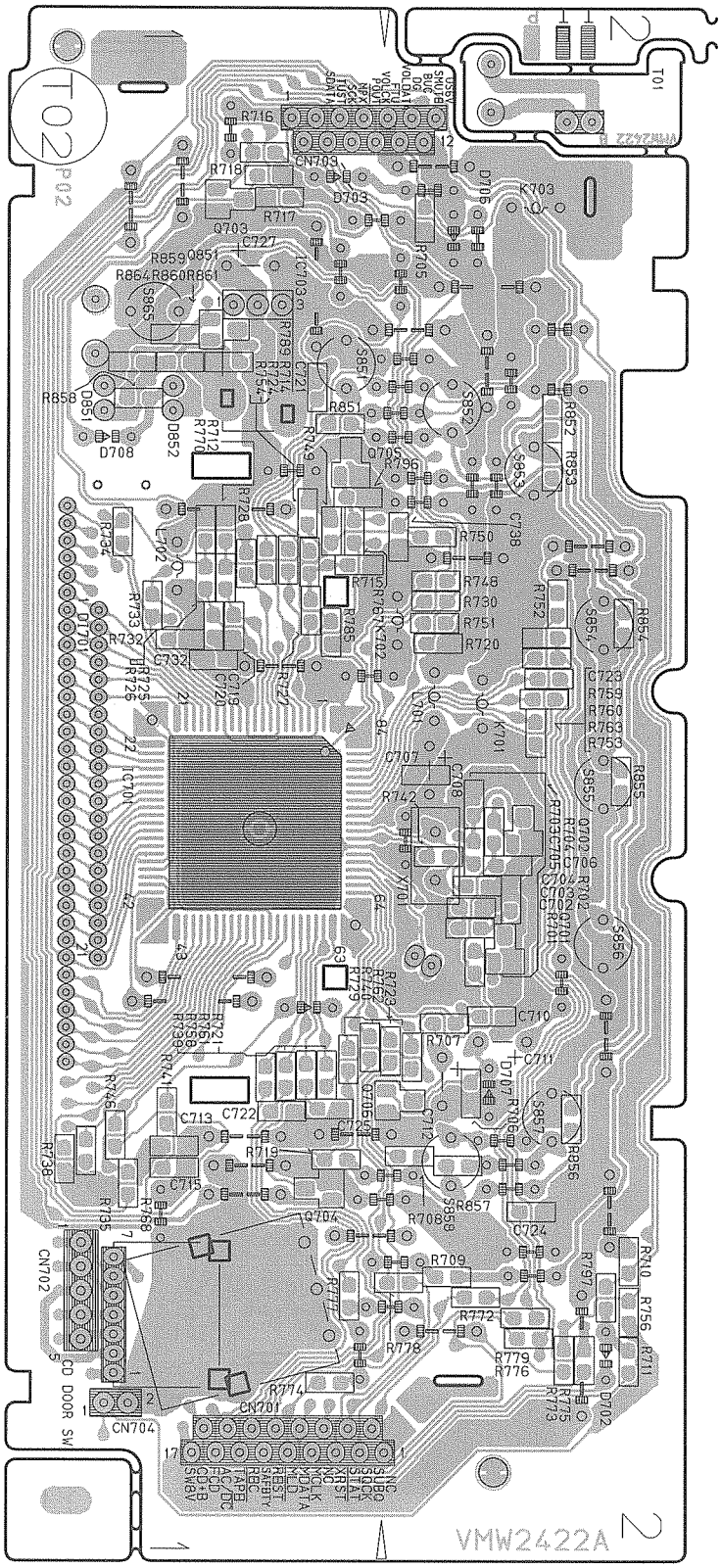

■ System CPU Board for RC-QN2/QN3 (VMW2422 Back side) :Block No 0 2

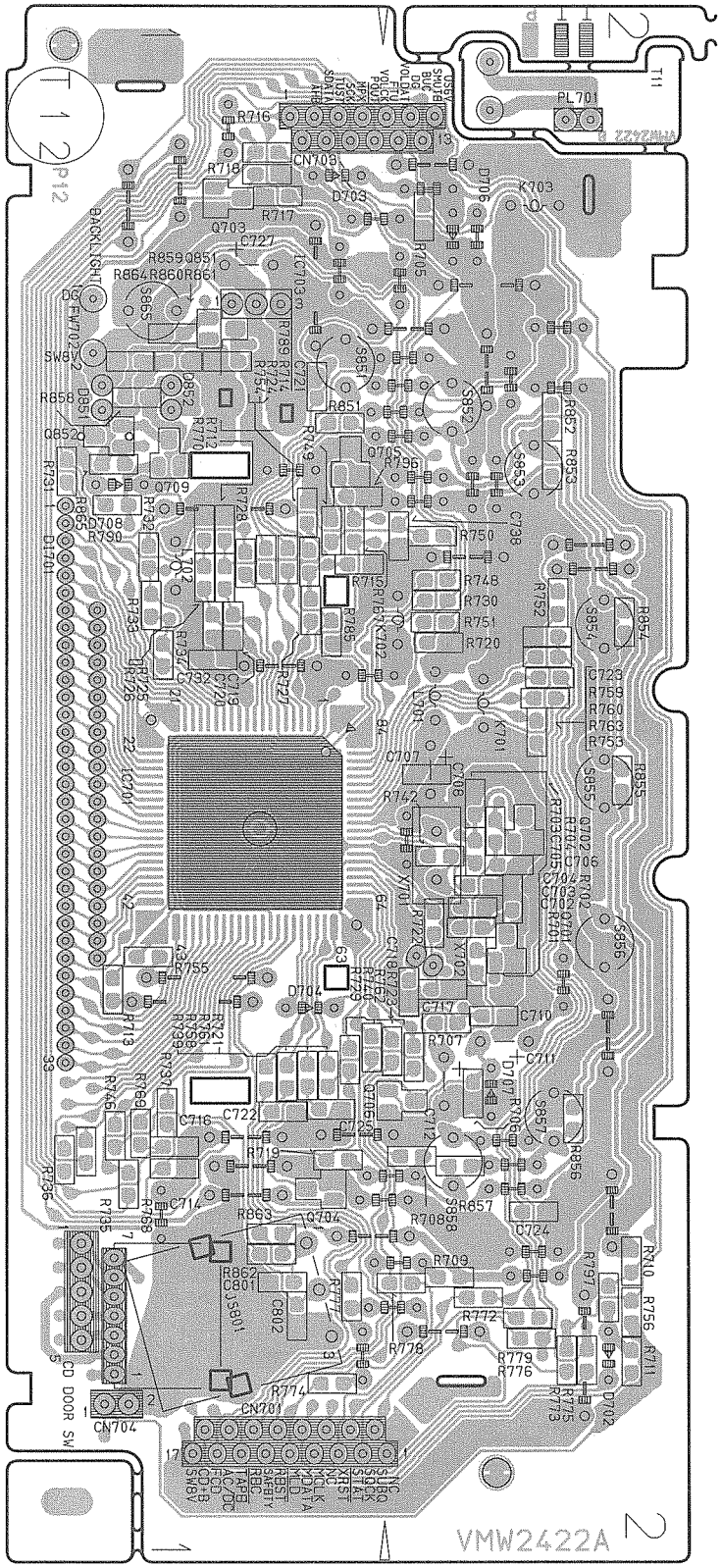

PARTS LIST

[RC-QN1BK/WT]

* All printed circuit boards and its assemblies are not available as service parts.

Area Suffix

B ..... U.K.
E ..... Continental Europe
EE ..... Eastern Europe
EN ..... Northern Europe
J ..... The U.S.A.
US ..... Singapore
UX ..... Saudi Arabia
UY ..... Argentina
U ..... Other Areas

- Contents -

General Exploded View and Parts List 4-2
Exploded View of Cassette Mechanism and Parts 4-4
Exploded View of CD Mechanism and Parts List 4-6
Electrical Parts List 4-7
Packing Materials and Accessories List 4-14

General Exploded View and Parts List

Block No. M 1 M M

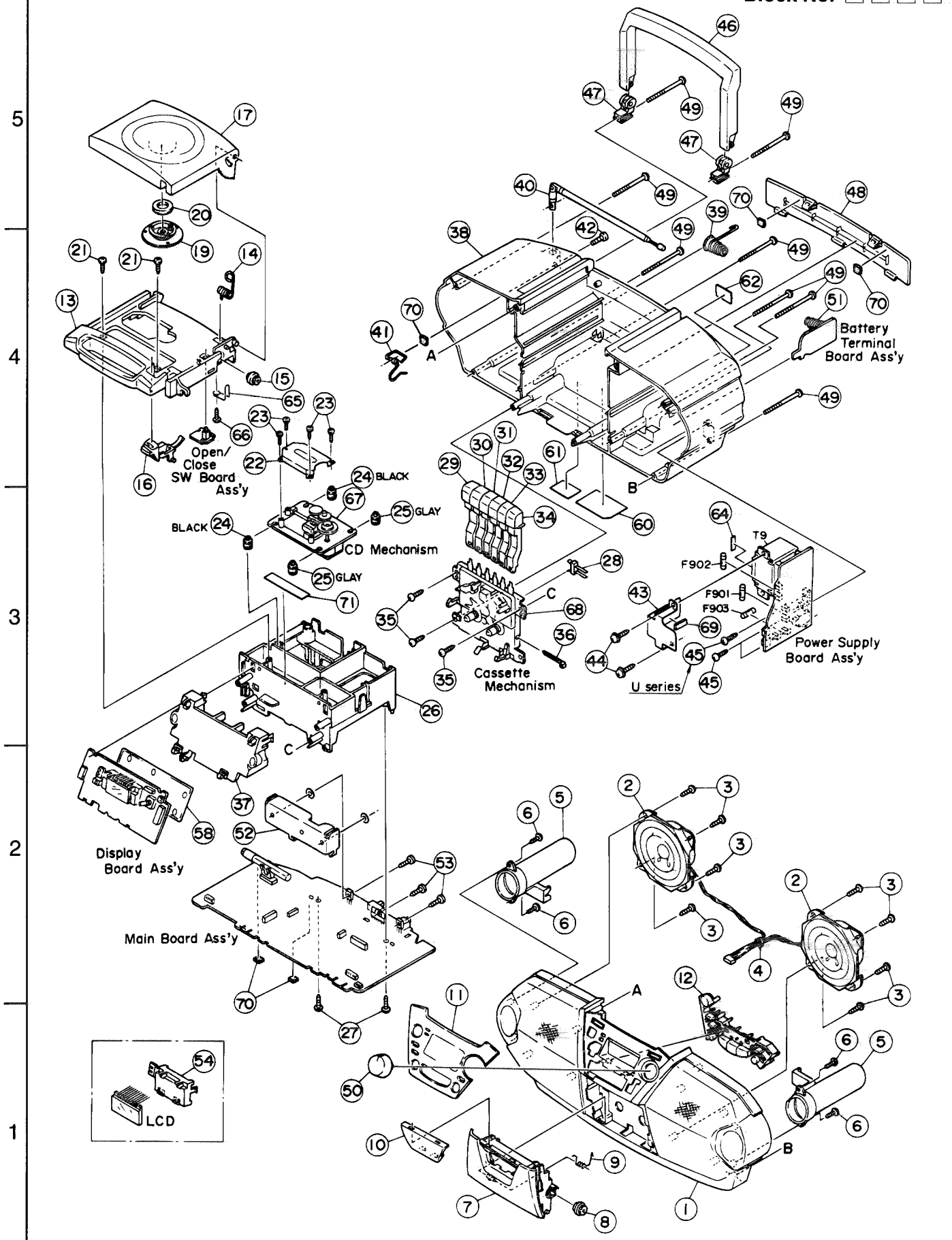

BLOCK NO. M1MM

⚠	REF.	PARTS NO.	PARTS NAME	REMARKS	QTY	SUFFIX	CLR
	1	LV10085-004A	FRONT CAB. ASSY		1	B,E,EE,EN	BK
		LV10085-003A	FRONT CAB. ASSY		1	J	BK
		LV10085-004A	FRONT CAB. ASSY		1	U,US,UX	BK
		LV10085-005A	FRONT CAB. ASSY		1	J	WT
		LV10085-006A	FRONT CAB. ASSY		1	U,US,UX,UY	WT
		LV10085-006A	FRONT CAB. ASSY		1	B,E,EN,UT	WT
	2	LE10010-005A	SPEAKER		2		
	3	SBSF3010Z	SCREW	FOR SPEAKER	8		
	4	E33754-001	TIE BAND		1		
	5	LV30169-001A	DUCT		2		
	6	SBSF3010Z	SCREW	FOR DUCT	4		
	7	LV10046-001A	CASSETTE DOOR		1		BK
		LV10046-002A	CASSETTE DOOR		1		WT
	8	VYH8007-001	DAMP GEAR	40010-604-00-01	1		
	9	LV40210-001A	DOOR SPRING		1		
	10	LV30171-002A	DOOR LENS		1		
	11	LV20078-006A	FRONT LENS		1	U,US,UX,UY	
		LV20078-005A	FRONT LENS		1	J	
		LV20078-006A	FRONT LENS		1	B,E,EE,EN,UT	
	12	LV10065-002A	PUSH BUTTON		1		
	13	LV10048-003A	CD CASE		1	J	
		LV10048-004A	CD CASE		1	U,US,UX,UY	
		LV10048-004A	CD CASE		1	B,E,EE,EN,UT	
	14	LV40211-003A	DOOR SPRING		1		
	15	VYH8007-001	DAMP GEAR	40010-604-00-01	1		
	16	LV30174-001A	OPEN BUTTON		1		
	17	LV10049-001A	CD DOOR		1		BK
		LV10049-002A	CD DOOR		1		WT
	19	LV30175-001A	CLAMPER		1		
	20	VYH7313-005	MAGNET		1		
	21	SDSF3012M	SCREW	CD CASE	2		
	22	202-300002-00	PICK-UP COVER	52120-101-00-01	1		
	23	SDSF2006M	SCREW		4		
	24	E75609-001	INSULATOR	BLACK	2		
	25	E75609-002	INSULATOR	GRAY	2		
	26	LV10047-002A	CD HOLDER		1		
	27	SBSF3010Z	SCREW	PCB	2		
	28	640101161T	LEAF SWITCH		1		
	29	LV20104-001A	MECHA.BUTTON(A)	PAUSE	1		
	30	LV20104-002A	MECHA.BUTTON(B)	STOP	1		
	31	LV20104-003A	MECHA.BUTTON(C)	FF	1		
	32	LV20104-004A	MECHA.BUTTON(D)	REW	1		
	33	LV20104-005A	MECHA.BUTTON(E)	PLAY	1		
	34	LV20104-006A	MECHA.BUTTON(F)	REC	1		
	35	SBSF3010Z	SCREW		3		
	36	E33754-001	TIE BAND		1		
	37	LV20080-001A	PCB BRACKET		1		
	38	LV10051-001A	REAR CABINET		1	J	BK
		LV10051-003A	REAR CABINET		1	U,US,UX	BK
		LV10051-005A	REAR CABINET		1	J	WT
		LV10051-002A	REAR CABINET		1	B,E,EE,EN	BK
		LV10051-007A	REAR CABINET		1	UT	WT
		LV10051-006A	REAR CABINET		1	B,E,EN	WT
		LV10051-007A	REAR CABINET		1	U,US,UX,UY	WT
	39	VYH5657-006	BATTERY SPRING		1		

BLOCK NO. M1MM

⚠	REF.	PARTS NO.	PARTS NAME	REMARKS	QTY	SUFFIX	CLR
	40	215-021704-00	ROD ANTENNA	77001-002-01-02	1		
	41	LV40212-001A	CONTACT SPRING		1		
	42	SDSP3008N	SCREW	ANT	1		
	43	LV30570-001A	SHIELD		1		
	44	GBSF3014Z	T.SCREW	TRANS	2		
	45	SBSF3010Z	SCREW	AC INLET	3	U,US,UX	
		SBSF3010Z	SCREW	AC INLET	3	UY,UT	
		SBSF3010Z	SCREW	AC INLET	2	EN,J	
		SBSF3010Z	SCREW	AC INLET	2	B,E,EE	
	46	LV20083-002A	HANDLE		1		WT
		LV20083-001A	HANDLE		1		BK
	47	VYH8008-001	HANDLE SUPPORT	40010-503-00-01	2		
	48	LV20082-002A	BATTERY COVER		1		WT
		LV20082-001A	BATTERY COVER		1		BK
	49	SBSF3045Z	SCREW	R.CABI	8		
	50	LV30172-001A	VOL.KNOB		1		
	51	VYH5483-001	BATTERY SPRING	SP901	1		
⚠	52	LV30176-001A	HEAT SINK		1		
	53	SDSF3008Z	SCREW	IC	3		
	54	LV30177-001A	LCD HOLDER		1		
	58	LV40449-001A	SHIELD		1		
	60	LV30376-002A	NAME PLATE		1	B,E,EN	BK
		LV30442-002A	NAME PLATE		1	B,E,EN	WT
		LV30442-004A	NAME PLATE		1	U,US,UY	WT
		LV30442-005A	NAME PLATE		1	UX	WT
		LV30442-007A	NAME PLATE		1	UT	WT
		LV30442-001A	NAME PLATE		1	J	WT
		LV30376-005A	NAME PLATE		1	UX	BK
		LV30376-001A	NAME PLATE		1	J	BK
		LV30376-006A	NAME PLATE		1	EE	BK
		LV30376-004A	NAME PLATE		1	U,US	BK
	61	LV30093-037A	UT LABEL		1	UT	
		77200-154-01-01	HHS LABEL		1	J	
	62	E70891-001	CLASS 1 LABEL	77200-161-01-01	1	B,E,EE,EN,US	
		VND5008-001	FCC LABEL		1	J	
		E70891-001	CLASS 1 LABEL	77200-161-01-01	1	UY,UT	
	64	VND4003-057	FUSE LABEL	F902	1	J	
	65	202-003509-00	SPRING		1		
	66	SBSF3010Z	SCREW		1		
	67	----------	C.D MECHA ASS'Y		1		
	68	----------	C.MECHA ASSY		1		
	69	VYSH102-089	SPACER	FOR T.SHIELD	1		
	70	VYSA1R4-058	SPACER	PCB,BATT.COVER	5		
	71	E406709-001	LASER CAUTION	77200-162-01-01	1	UY,UT	
		E406709-001	LASER CAUTION	77200-162-01-01	1	B,E,EE,EN,US	
⚠	F 901	QMF51E2-R40SBS	FUSE		1	U,US,UX	
⚠		QMF51E2-R40SBS	FUSE		1	UY,UT	
⚠	F 902	QMF51E2-3R15J1	FUSE		1	U,US,UX	
⚠		QMF51E2-3R15J1	FUSE		1	UY,UT	
⚠		QMF51N2-3R0-J1	FUSE		1	J	
⚠		QMF51E2-3R15J1	FUSE		1	B,E,EE,EN	
⚠	F 903	QMF51N2-3R0-J1	FUSE		1	J	
⚠	T 9	QQT0209-001	POWER TRANS		1	J	
⚠		QQT0209-003	POWER TRANS		1	U,US,UX	
⚠		QQT0209-002	POWER TRANS		1	B,E,EE,EN	
⚠		QQT0209-003	POWER TRANS		1	UY,UT	

BLOCK NO. M2MM

⚠	REF.	PARTS NO.	PARTS NAME	REMARKS	QTY	SUFFIX	CLR
	1	192114316T	BASE ASS'Y		1		
	2	19211409T	SWITCH ACTUATOR		1		
	3	19211408T	LOCK CAM		1		
	4	19211403T	REC BUTT.LEVER		1		
	5	19211419T	PLAY BUTT.LEVER		1		
	6	19211404T	REW BUTT. LEVER		1		
	7	19211405T	FF BUTTON LEVER		1		
	8	19211406T	STOP BUTT.LEVER		1		
	9	19211460T	PAUSE BUT.LEVER		1		
	10	19211413T	P CONT. SPRING		1		
	11	19211455T	PAUSE LEVER (E)		1		
	12	19211412T	SPRING		1		
	13	19211411T	PAUSE STOPPER		1		
	14	19211414T	TORSION SPRING		1		
	15	192101501ZT	CHASSIS ASS'Y		1		
	16	19211416T	TORSION SPRING		1		
	17	19211417T	TORSION SPRING		1		
	19	182101159T	E.KICK LEVER		1		
	20	19211420T	STOPPER		1		
	21	19211421T	TORSION SPRING		1		
	22	19211415T	TORSION SPRING		1		
	23	MSW-1541T	LEAF SWITCH		1		
	24	18210150T	PLAY BUTTON LEV		1		
	25	19210311T	HEAD PANEL		1		
	26	19210304AT	HEAD BASE		1		
	27	19210309T	PANEL P SPRING		1		
	28	19210305T	MAGNET HEAD ARM		1		
	29	18210307T	AZIMUTH SPRING		1		
	30	19211418AT	SPRING		1		
	31	19210310T	MG ARM SPRING		1		
	32	192104309T	P.ROLL. ARM ASY		1		
	35	19212604TT	SENSING LEVER		1		
	36	19212605T	TORSION SPRING		1		
	37	192126502ZT	GEAR PLATE ASSY		1		
	38	19212602T	CAM GEAR		1		
	40	192107304T	RF CLUTCH		1		
	41	19210703T	REW/F.F. BELT		1		
	43	192109303ZT	FLYWHEEL ASS'Y		1		
	45	18211070T	F.FORWARD GEAR		1		
	46	18211099T	BACK TENSION SP		1		
	47	192105304T	S. REEL ASS'Y		1		
	48	192105303T	T. REEL ASS'Y		1		
	49	19210506T	SENSOR		1		
	51	18211289AT	MOTOR BRACKET		1		
	53	19211202T	COLLAR SCREW		2		
	54	19211201T	MOTOR PULLEY		1		
	55	19210904T	MAIN BELT		1		
	56	19211203T	MB SCREW		1		
	58	19211301T	EJ. SLIDE LEVER		1		
	59	18211093T	PACK SORING		1		
	60	18211069T	REC.SAF.LEVER		1		
	62	MS15R-AA2N1	R/P HEAD		1		
	63	PHK-MSI-6A	E HEAD		1		
	64	60020217T	MOTOR		1		

BLOCK NO. M2MM

⚠	REF.	PARTS NO.	PARTS NAME	REMARKS	QTY	SUFFIX	CLR
	66	9P0420031T	SCREW M2X3		1		
	68	9B1020051T	SCREW M2X5		2		
	69	9C0720451T	SCREW M2X4.5		2		
	70	9B0120031T	SCREW M2X3		1		
	71	9P0120061T	SCREW M2X6		1		
	72	9F0820071T	AZIMUTH SCREW		1		
	75	9W0230010T	P WASHER		1		
	76	9W0250010T	P WASHER		1		
	77	9W0140010T	P WASHER		1		
	78	9W0113020T	P WASHER		1		
	80	19210201T	REC ARM		1		
	81	19211437T	P ARM COLLAR		2		
	82	64010138T	LEAF SWITCH		1		
	83	9P0420041T	SCREW(M2 X 4)		1		
	84	9P0420051T	SCREW(M2 X 5)		1		
	85	19211434T	P.ROLLER ARM		1		
	86	9P0820301T	SCREW M2X3		1		

Cassette Mechanism Ass'y and Parts List

Block No. M 2 M M

TN-21ZVC-1792

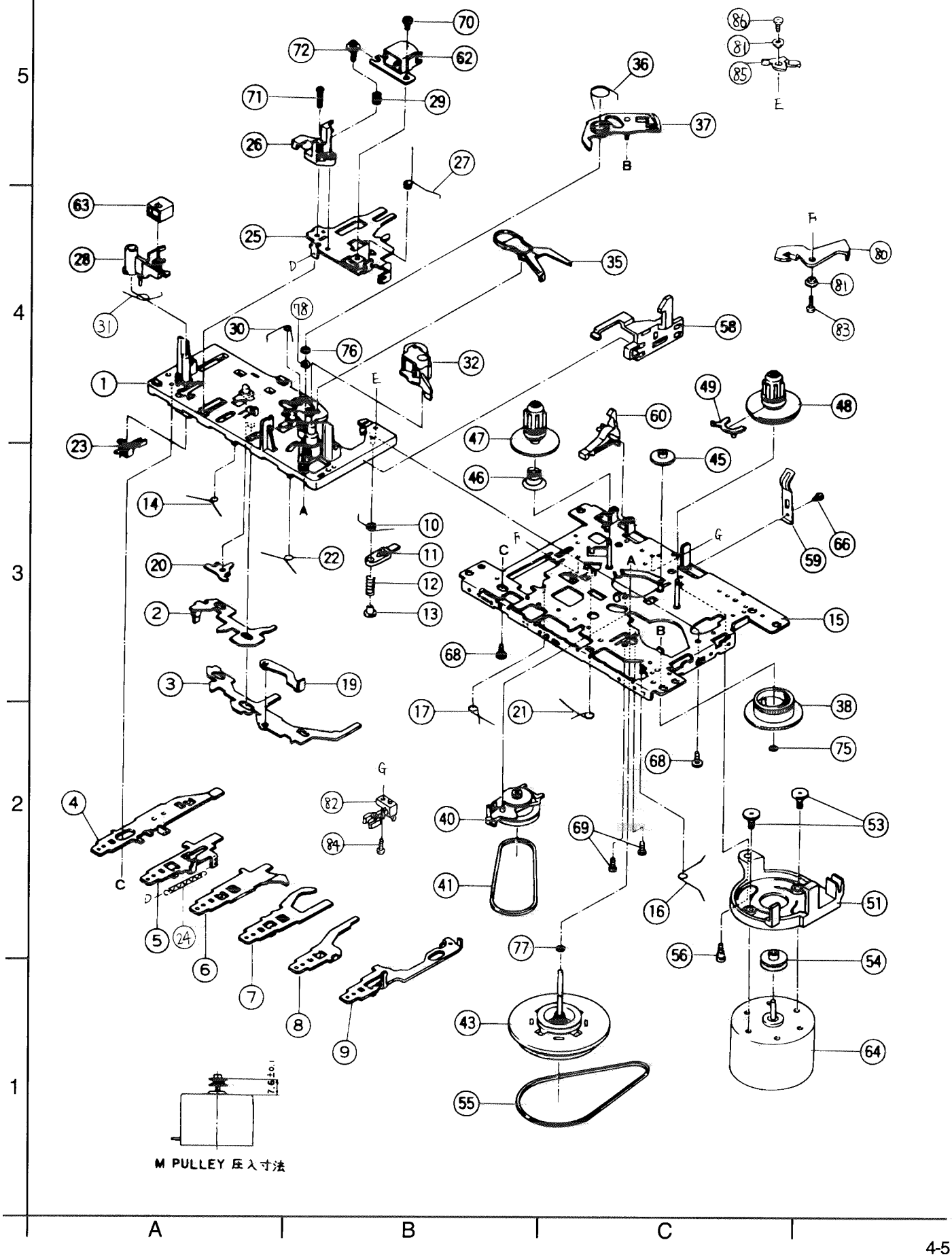

CD Mechanism Ass'y and Parts List

Block No. M 3 M M

■Grease Point

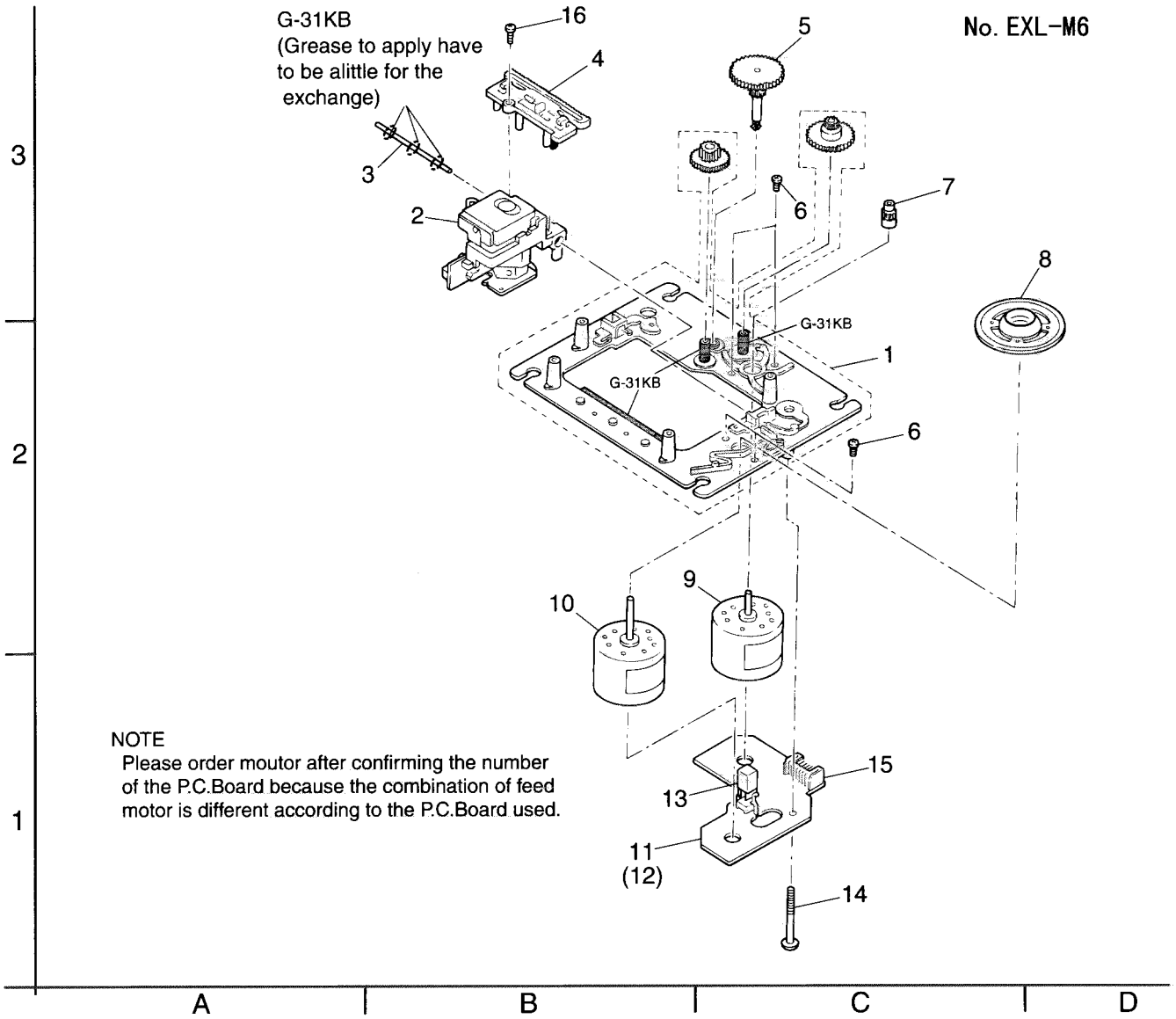

■CD Mechanism Assembly Parts List

⚠	Item	Parts Number	Parts Name	Q'ty	Description	Area
	1	EPB-002PK	MECHA. BASE ASSY	1		
	2	OPTIMA-150S	OPTICAL PICK UP	1		
	3	E407782-001	CD SHAFT	1		
	4	E307746-001	CD RACK	1		
	5	EPB-003A	MECHA GEAR	1		
	6	SDSP2003N	SCREW	4		
	7	E406750-001	PINION GEAR	1		
	8	EPB309173A	TURN TABLE	1		
	9	E406784-001	FEED MOTOR	1	Use the No.11 P.C.Board	
		MDN-4RA3ETA-1	FEED MOTOR	1	Use the No.12 P.C.Board	
	10	E406783-001	SPINDLE MOTOR	1		
	11	EMW10190-001 (S)	P. C. BOARD	1		
	12	EMW10190-221 (S)	P. C. BOARD	1		
	13	ESB1100-005	LEAF SWITCH	1		
	14	E75832-001	SCREW	1		
	15	EMV5109-006B	CONN. TERMINAL	1		
	16	SDSF2006Z	SCREW	1		

■Mein P.C. Board (VMW1474)

BLOCK NO. 01

⚠	REF.	PARTS NO.	PARTS NAME	REMARKS	SUFFIX
	BP 1	VBP1M3B-004	BP FILTER	BPF	B,E,EN,J
	BP 1	VBP1M3B-004	BP FILTER	BPF	U,US,UX,UY,UT
	BP 1	VBP4W3B-007Z	BP FILTER	BPF	EE
	C 3	QCSB1HK-6R8Y	C CAPACITOR	6.8PF 10% 50V	U,US,UX,UY,UT
	C 3	QCSB1HK-2R2Y	C CAPACITOR	2.2PF 10% 50V	EE
	C 3	QCSB1HK-6R8Y	C CAPACITOR	6.8PF 10% 50V	B,E,EN,J
	C 6	QCVB1CN-103Y	C CAPACITOR	.010MF 30% 16V	
	C 7	QCS11HJ-200	C CAPACITOR	20PF 5% 50V	B,E,EN,J
	C 7	QCSB1HJ-680	C CAPACITOR	67PF 5% 50V	EE
	C 7	QCS11HJ-200	C CAPACITOR	20PF 5% 50V	U,US,UX,UY,UT
	C 9	QCS11HJ-120	C CAPACITOR	12PF 5% 50V	U,US,UX,UY,UT
	C 9	QCSB1HJ-3R9	C CAPACITOR	3.9PF 5% 50V	EE
	C 9	QCS11HJ-120	C CAPACITOR	12PF 5% 50V	B,E,EN,J
	C 13	QCC11EM-223V	C CAPACITOR	.022MF 20% 25V	
	C 16	QCVB1CN-103Y	C CAPACITOR	.010MF 30% 16V	
	C 21	QCC11EM-473V	C CAPACITOR	.047MF 20% 25V	
	C 22	QFP41HJ-431	PP CAPACITOR	430PF 5% 50V	
	C 23	QCT30CH-120Y	C CAPACITOR	12PF 5% 50V	
	C 31	QCGB1HK-102	C CAPACITOR	1000PF 10% 50V	
	C 32	QCVB1CN-103Y	C CAPACITOR	.010MF 30% 16V	
	C 33	QET41AM-107	E CAPACITOR	100MF 20% 10V	
	C 35	QCVB1CN-103Y	C CAPACITOR	.010MF 30% 16V	
	C 36	QET41HM-475	E CAPACITOR	=R19	
	C 37	QCGB1HK-102	C CAPACITOR	1000PF 10% 50V	
	C 40	QET41HM-105	E CAPACITOR	1.0MF 20% 50V	
	C 41	QET41CM-106	E CAPACITOR	10MF 20% 16V	
	C 42	QCC11EM-473V	C CAPACITOR	.047MF 20% 25V	
	C 43	QCVB1CN-103Y	C CAPACITOR	.010MF 30% 16V	
	C 44	QETC1HM-104Z	E CAPACITOR	.10MF 20% 50V	
	C 45	QET41HM-474	E CAPACITOR	.47MF 20% 50V	
	C 47	QCC11EM-153V	C CAPACITOR	.015MF 20% 25V	
	C 48	QCC11EM-153V	C CAPACITOR	.015MF 20% 25V	
	C 49	QETC1HM-104Z	E CAPACITOR	.10MF 20% 50V	
	C 50	QETC1HM-104Z	E CAPACITOR	.10MF 20% 50V	
	C 51	QCBB1HK-331Y	C CAPACITOR	330PF 10% 50V	
	C 52	QCGB1HK-102	C CAPACITOR	1000PF 10% 50V	
	C 56	QCGB1HK-102	C CAPACITOR	1000PF 10% 50V	B,E,EN,J
	C 56	QCGB1HK-102	C CAPACITOR	1000PF 10% 50V	U,US,UX,UY,UT
	C 60	QCGB1HK-102	C CAPACITOR	1000PF 10% 50V	
	C 61	QET41AM-107	E CAPACITOR	100MF 20% 10V	
	C 62	QCT30CH-120Y	C CAPACITOR	12PF 5% 50V	
	C 63	QCGB1HK-102	C CAPACITOR	1000PF 10% 50V	
	C 64	QCT30CH-120Y	C CAPACITOR	12PF 5% 50V	
	C 65	QCGB1HK-102	C CAPACITOR	1000PF 10% 50V	
	C 69	QCXB1CM-222Y	C CAPACITOR	2200PF 20% 16V	
	C 70	QETC1HM-225Z	E CAPACITOR	2.2MF 20% 50V	
	C 71	QET41CM-226	E.CAPACITOR	22MF 20% 16V	
	C 77	QCGB1HK-102	C CAPACITOR	1000PF 10% 50V	B,E,EN,J
	C 77	QCGB1HK-102	C CAPACITOR	1000PF 10% 50V	U,US,UX,UY,UT
	C 79	QCSB1HK-5R6Y	C CAPACITOR	5.6PF 10% 50V	U,US,UX,UY,UT
	C 79	QCSB1HK-5R6Y	C CAPACITOR	5.6PF 10% 50V	B,E,EN,J
	C 80	QCBB1HK-151Y	C CAPACITOR	150PF 10% 50V	B,E,EE,EN
	C 80	QCBB1HK-151Y	C CAPACITOR	150PF 10% 50V	U,US,UX,UY,UT
	C 81	QCBB1HK-151Y	C CAPACITOR	150PF 10% 50V	EE
	C 82	QCGB1HK-102	C CAPACITOR	1000PF 10% 50V	EE

BLOCK NO. 01

⚠	REF.	PARTS NO.	PARTS NAME	REMARKS	SUFFIX
	C 101	QFN41HJ-102	M CAPACITOR	1000PF 5% 50V	
	C 102	QFN81HJ-562	M CAPACITOR	5600PF 5% 50V	
	C 103	QET41CM-226	E.CAPACITOR	22MF 20% 16V	
	C 104	QFV41HJ-393ZM	CAPACITOR	.039MF 5% 50V	
	C 105	QETC1HM-335Z	E CAPACITOR	3.3MF 20% 50V	
	C 107	QET41HM-475	E CAPACITOR	4.7MF 20% 50V	
	C 108	QET41HM-105	E CAPACITOR	1.0MF 20% 50V	
	C 114	QET41HM-475	E CAPACITOR	4.7MF 20% 50V	
	C 119	QET41HM-474	E CAPACITOR	.47MF 20% 50V	
	C 120	QET41CM-107	E CAPACITOR	100MF 20% 16V	
	C 121	QCBB1HK-221Y	C CAPACITOR	220PF 10% 50V	
	C 122	QET41CM-107	E CAPACITOR	100MF 20% 16V	
	C 123	QETB1CM-108	E CAPACITOR	1000MF 20% 16V	
	C 124	QFN41HJ-104	M CAPACITOR	.10MF 5% 50V	
	C 130	QCS11HJ-221	C CAPACITOR	220PF 5% 50V	
	C 132	QET41HM-474	E CAPACITOR	.47MF 20% 50V	
	C 133	QET41AM-476	E CAPACITOR	47MF 20% 10V	
	C 155	QCBB1HK-181Y	C CAPACITOR	180PF 10% 50V	
	C 156	QFN81HJ-822	M CAPACITOR	8200PF 5% 50V	
	C 157	QFN41HJ-154	M CAPACITOR	.15MF 5% 50V	
	C 201	QFN41HJ-102	M CAPACITOR	1000PF 5% 50V	
	C 202	QFN81HJ-562	M CAPACITOR	5600PF 5% 50V	
	C 203	QET41CM-226	E.CAPACITOR	22MF 20% 16V	
	C 204	QFV41HJ-393ZM	CAPACITOR	.039MF 5% 50V	
	C 205	QETC1HM-335Z	E CAPACITOR	3.3MF 20% 50V	
	C 207	QET41HM-475	E CAPACITOR	4.7MF 20% 50V	
	C 208	QET41HM-105	E CAPACITOR	1.0MF 20% 50V	
	C 214	QET41HM-475	E CAPACITOR	4.7MF 20% 50V	
	C 219	QET41HM-474	E CAPACITOR	.47MF 20% 50V	
	C 220	QET41CM-107	E CAPACITOR	100MF 20% 16V	
	C 221	QCBB1HK-221Y	C CAPACITOR	220PF 10% 50V	
	C 222	QET41CM-107	E CAPACITOR	100MF 20% 16V	
	C 223	QETB1CM-108	E CAPACITOR	1000MF 20% 16V	
	C 224	QFN41HJ-104	M CAPACITOR	.10MF 5% 50V	
	C 230	QCS11HJ-221	C CAPACITOR	220PF 5% 50V	
	C 232	QET41HM-474	E CAPACITOR	.47MF 20% 50V	
	C 233	QET41AM-476	E CAPACITOR	47MF 20% 10V	
	C 255	QCBB1HK-181Y	C CAPACITOR	180PF 10% 50V	
	C 256	QFN81HJ-822	M CAPACITOR	8200PF 5% 50V	
	C 257	QFN41HJ-154	M CAPACITOR	.15MF 5% 50V	
	C 303	QCS11HJ-151	C CAPACITOR	150PF 5% 50V	
	C 304	QET41AM-476	E CAPACITOR	47MF 20% 10V	
	C 305	QET41CM-226	E CAPACITOR	22MF 20% 16V	
	C 306	QET41AM-476	E CAPACITOR	47MF 20% 10V	B,E,EE,EN
	C 306	QET41AM-476	E CAPACITOR	47MF 20% 10V	J
	C 306	QETC1AM-107ZN	E CAPACITOR	100MF 20% 10V	U,US,UX,UY,UT
	C 308	QCS11HJ-181	C CAPACITOR	180PF 5% 50V	
	C 309	QCXB1CM-182Y	C CAPACITOR	1800PF 20% 16V	
	C 310	QFN41HJ-182	M CAPACITOR	1800PF 5% 50V	
	C 312	QFN41HJ-682	M CAPACITOR	6800PF 5% 50V	
	C 313	QET41AM-476	E CAPACITOR	47MF 20% 10V	
	C 315	QFN41HJ-472	M CAPACITOR	4700PF 5% 50V	
⚠	C 318	QETB1EM-338	E CAPACITOR	3300MF 20% 25V	
	C 319	QET41EM-106	E CAPACITOR	10MF 20% 25V	
	C 320	QET41CM-227	E CAPACITOR	220MF 20% 16V	

BLOCK NO. 01

⚠	REF.	PARTS NO.	PARTS NAME	REMARKS	SUFFIX
	C 322	QCGB1HK-102	C CAPACITOR	1000PF 10% 50V	
	C 331	QCGB1HK-102	C CAPACITOR	1000PF 10% 50V	
	C 350	QET41HM-475	E CAPACITOR	4.7MF 20% 50V	
	C 352	QETC1AM-107ZN	E CAPACITOR	100MF 20% 10V	U,US,UX,UY,UT
	C 353	QET41CM-106	E CAPACITOR	10MF 20% 16V	
	C 354	QET41AM-227	E CAPACITOR	220MF 20% 10V	
	C 356	QETC1CM-226Z	E CAPACITOR	22MF 20% 16V	U,US,UX,UY,UT
	C 357	QET41CM-226	E CAPACITOR	22MF 20% 16V	
	C 604	QET41AM-107	E CAPACITOR	100MF 20% 10V	
	C 605	QET41EM-106	E CAPACITOR	10MF 20% 25V	
	C 606	QCGB1HK-102	C CAPACITOR	1000PF 10% 50V	
	C 607	QCGB1HK-102	C CAPACITOR	1000PF 10% 50V	
	C 608	QET41HM-105	E CAPACITOR	1.0MF 20% 50V	
	C 609	QCBB1HK-101Y	C CAPACITOR	100PF 10% 50V	
	C 610	QFLC1HJ-273ZM	M CAPACITOR	.027MF 5% 50V	
	C 611	QCXB1CM-222Y	C CAPACITOR	2200PF 20% 16V	
	C 612	QCVB1CN-103Y	C CAPACITOR	.010MF 30% 16V	
	C 613	QCBB1HK-331Y	C CAPACITOR	330PF 10% 50V	
	C 614	QFLC1HJ-104ZM	M CAPACITOR	.10MF 5% 50V	
	C 615	QCFB1HZ-223	C CAPACITOR	.022MF +80:-20% 50V	
	C 616	QCFB1HZ-223	C CAPACITOR	.022MF +80:-20% 50V	
	C 617	QCFB1HZ-223	C CAPACITOR	.022MF +80:-20% 50V	
	C 618	QCXB1CM-222Y	C CAPACITOR	2200PF 20% 16V	
	C 619	QCBB1HK-271Y	C CAPACITOR	270PF 10% 50V	
	C 620	QCS11HJ-470	C CAPACITOR	47PF 5% 50V	
	C 621	QCBB1HK-821Y	C CAPACITOR	820PF 10% 50V	
	C 622	QET41AM-476	E CAPACITOR	47MF 20% 10V	
	C 623	QFLC1HJ-104ZM	M CAPACITOR	.10MF 5% 50V	
	C 628	QCC11EM-473V	C CAPACITOR	.047MF 20% 25V	
	C 629	QET41AM-107	E CAPACITOR	100MF 20% 10V	
	C 631	QET41AM-477	E CAPACITOR	470MF 20% 10V	
	C 632	QET41AM-107	E CAPACITOR	100MF 20% 10V	
	C 651	QCS11HJ-220	C CAPACITOR	22PF 5% 50V	
	C 652	QCS11HJ-220	C CAPACITOR	22PF 5% 50V	
	C 653	QCFB1HZ-223	C CAPACITOR	.022MF +80:-20% 50V	
	C 655	QCC11EM-473V	C CAPACITOR	.047MF 20% 25V	
	C 661	QCBB1HK-471Y	C CAPACITOR	470PF 10% 50V	
	C 662	QCFB1HZ-223	C CAPACITOR	.022MF +80:-20% 50V	
	C 663	QFLC1HJ-223ZM	M CAPACITOR	.022MF 5% 50V	
	C 664	QCFB1HZ-223	C CAPACITOR	.022MF +80:-20% 50V	
	C 665	QFV41HJ-104ZM	TF CAPACITOR	.10MF 5% 50V	
	C 671	QCXB1CM-222Y	C CAPACITOR	2200PF 20% 16V	
	C 672	QCXB1CM-222Y	C CAPACITOR	2200PF 20% 16V	
	C 673	QET41AM-227	E CAPACITOR	220MF 20% 10V	
	C 674	QCFB1HZ-223	C CAPACITOR	.022MF +80:-20% 50V	
	C 675	QCGB1HK-102	C CAPACITOR	AG-DG	
	C 691	QCBB1HK-151Y	C CAPACITOR	DENGEN NOISE	
	C 692	QCBB1HK-151Y	C CAPACITOR	DENGEN NOISE	
	C 693	QCBB1HK-151Y	C CAPACITOR	DENGEN NOISE	
	C 694	QCBB1HK-151Y	C CAPACITOR	DENGEN NOISE	
	C 698	QCGB1HK-102	C CAPACITOR	1000PF 10% 50V	
	C 901	QCF21HP-223A	C.CAPACITOR	.022MF +80:-20%	
	C 902	QCF21HP-223A	C.CAPACITOR	.022MF +80:-20%	
	C 903	QCF21HP-223A	C.CAPACITOR	.022MF +80:-20%	
	C 904	QCF21HP-223A	C.CAPACITOR	.022MF +80:-20%	

BLOCK NO. 01

⚠	REF.	PARTS NO.	PARTS NAME	REMARKS	SUFFIX
	C 905	QCVB1CN-103Y	C CAPACITOR	.010MF 30% 16V	
	C 906	QCVB1CN-103Y	C CAPACITOR	.010MF 30% 16V	
	C 908	QCVB1CN-103Y	C CAPACITOR	.010MF 30% 16V	
	C 909	QET41HM-475	E CAPACITOR	4.7MF 20% 50V	
	C 910	QET41AM-227	E CAPACITOR	220MF 20% 10V	
	C 911	QET41CM-226	E.CAPACITOR	22MF 20% 16V	
	C 912	QCVB1CN-103Y	C CAPACITOR	.010MF 30% 16V	
	C 913	QCVB1CN-103Y	C CAPACITOR	.010MF 30% 16V	
	C 914	QET41AM-227	E CAPACITOR	220MF 20% 10V	
	C 915	QET41AM-107	E CAPACITOR	100MF 20% 10V	
	C 916	QET41AM-476	E CAPACITOR	47MF 20% 10V	
	CF 1	QAX0403-001	C FILTER		
	CF 3	VCF1Z2Z-117Z	C FILTER		
	CF 4	QAX0409-001	CERA LOCK		
	CM 1	QETC1HM-104Z	E CAPACITOR	.10MF 20% 50V	U,US,UX,UY,UT
	CM 2	QCBB1HK-151Y	C CAPACITOR	150PF 10% 50V	U,US,UX,UY,UT
	CM 3	QET41AM-107	E CAPACITOR	100MF 20% 10V	U,US,UX,UY,UT
	CM 4	QCC11EM-103V	C CAPACITOR	.010MF 20% 25V	U,US,UX,UY,UT
	CM 5	QETC1HM-104Z	E CAPACITOR	.10MF 20% 50V	U,US,UX,UY,UT
	CM 6	QETC1HM-104Z	E CAPACITOR	.10MF 20% 50V	U,US,UX,UY,UT
	CN301	VMC0040-004	W TO B CONNE	MAIN(TO HEAD)	
	CN303	QGF1212C1-12	FFC/FPC CONNE	MAIN(TO CTRL)	
	CN304	QGF1212C1-17	FFC CONNE	MAIN(TO CTRL)	
	CN306	TID-X03P-MI	CONNECTOR	SAME AS VMZ0049	
	CN307	5268-03A	CONNECTOR	SAME AS VMZ0049	
	CN308	TIP-X06P-B2	W TO B CONNE	MAIN(TO MOTOR)	
	CN309	TXLL-004-M	CONNECTOR	MAIN(TO SPK)	
	CN310	VMC0040-003	W TO B CONNE	TEST POINT	
	CN601	QGF1025C1-15	21-41 CONNECTOR	TO RF	
	D 1	SVC203SPA-JV-T	VARI-CAPA DIODE		U,US,UX,UY,UT
	D 1	KV1370N-T	VARI-CAPA DIODE		EE
	D 1	SVC203SPA-JV-T	VARI CAP		B,E,EN,J
	D 2	SVC203SPA-JV-T	VARI CAP		B,E,EN,J
	D 2	KV1370N-T	VARI-CAPA DIODE		EE
	D 2	SVC203SPA-JV-T	VARI-CAPA DIODE		U,US,UX,UY,UT
	D 5	1SS133-T2	DIODE		
	D 6	1SS133-T2	DIODE		
	D 8	KV1555N-T	VARI CAP		
	D 12	1N4001	DIODE		
⚠	D 303	1SS133-T2	DIODE		
	D 305	1SS133-T2	DIODE		
	D 307	1SS133-T2	DIODE		
	D 661	1SS133-T2	DIODE		
⚠	D 901	1N5401TM	DIODE		
⚠	D 902	1N5401TM	DIODE		
⚠	D 903	1N5401TM	DIODE		
⚠	D 904	1N5401TM	DIODE		
	D 905	1SS133-T2	DIODE		
	D 906	1SS133-T2	DIODE		
	D 907	1SS133-T2	DIODE		
⚠	D 908	1SS133-T2	DIODE		
	D 909	1SS133-T2	DIODE		
	D 910	1SS133-T2	DIODE		
	D 911	1SS133-T2	DIODE		
	D 912	1N4001	DIODE		

BLOCK NO. 01

⚠	REF.	PARTS NO.	PARTS NAME	REMARKS	SUFFIX
	D 914	1SS133-T2	DIODE		
	D 915	1SS133-T2	DIODE		
	D 917	1SS133-T2	DIODE		
	D 918	1SS133-T2	DIODE		
	D 995	1SS133-T2	DIODE		
	DM 1	1SS133-T2	DIODE		U,US,UX,UY,UT
	DM 2	1SS133-T2	DIODE		U,US,UX,UY,UT
	FC901	EMG7331-003Z	FUSE CLIP	FOR F901	U,US,UX,UY,UT
	FC902	EMG7331-003Z	FUSE CLIP	FOR F902	
	FC903	EMG7331-003Z	FUSE CLIP	FOR F903	J
	FC904	EMG7331-003Z	FUSE CLIP	FOR F901	U,US,UX,UY,UT
	FC905	EMG7331-003Z	FUSE CLIP	FOR F902	
	FC906	EMG7331-003Z	FUSE CLIP	FOR F903	J
	IC 2	TA2008AN	IC		
	IC 3	LC72136N	IC		
	IC301	TA2068N	IC	PB&REC	
⚠	IC302	LA4597K	IC	POWER AMP	
⚠	IC304	LA4597K	IC	POWER AMP	
	IC601	AN8806SB	IC	RF AMP	
⚠	IC602	BA6897FP	IC	DRIVER	
	IC603	MN35510	IC	1CHIP PROCESSER	
⚠	J 9	QNC0042-001	AC SOCKET		U,US,UX,UY,UT
⚠	J 9	QNC0043-001	AC SOCKET		J
⚠	J 9	QNC0042-001	AC SOCKET		B,E,EE,EN
	J 301	HSJ2000-01-010	HEADPHONE JACK	H.HONES JACK	
	JM 1	HSJ2000-01-010	HEADPHONE JACK		U,US,UX,UY,UT
	K 1	VQZ0048-009	INDUCTOR		EE
	K 601	VQZ0048-009	INDUCTOR		
	K 602	VQZ0048-009	INDUCTOR		
	L 1	VQF1B20-019	OSC COIL	FM OSC	U,US,UX,UY,UT
	L 1	QQR0773-001	OSC COIL	FM OSC	EE
	L 1	VQF1B20-019	OSC COIL	FM OSC	B,E,EN,J
	L 2	QQR0781-001	RF COIL	FM RF	EE
	L 2	VQC1505-002T	RF COIL	FM RF	U,US,UX,UY,UT
	L 2	VQC1505-002T	RF COIL	FM RF	B,E,EN,J
	L 3	VQB008M-506	BAR ANTENA	MW RF	
	L 4	QQR0723-001	OSC COIL(MW)	MW OSC	
	L 7	VQP0018-221	INDUCTOR		
	L 12	V03047-16	INDUCTOR		
	L 601	3A839N	INDUCTOR		
	L 901	VQP0028-330Z	INDUCTOR		
	Q 101	2SC2001/LK/-T	TRANSISTOR	S MUTE	
	Q 111	2SC2458(Y,GR)	TRANSISTOR		
	Q 112	2SC2458(Y,GR)	TRANSISTOR		
	Q 201	2SC2001/LK/-T	TRANSISTOR	S MUTE	
	Q 211	2SC2458(Y,GR)	TRANSISTOR		
	Q 212	2SC2458(Y,GR)	TRANSISTOR		
	Q 302	DTA114ES	TRANSISTOR TAPE		
	Q 303	2SC2458(Y,GR)	TRANSISTOR		
	Q 304	2SA1015/YG/-T	TRANSISTOR		
	Q 305	DTC114ESA-T	D.TRANSISTOR		
	Q 306	8550C	TRANSISTOR		
	Q 308	DTC143ES	TRANSISTOR		
	Q 309	2SC2458(Y,GR)	TRANSISTOR		
	Q 310	DTA143ES	TRANSISTOR		

BLOCK NO. 01

⚠	REF.	PARTS NO.	PARTS NAME	REMARKS	SUFFIX
	Q 311	2SC2001/LK/-T	TRANSISTOR		
	Q 312	2SC2001/LK/-T	TRANSISTOR		
	Q 313	2SC2001/LK/-T	TRANSISTOR		
	Q 315	2SC2458(Y,GR)	TRANSISTOR		
	Q 316	2SA1015/YG/-T	TRANSISTOR		
	Q 317	2SC2458(Y,GR)	TRANSISTOR		
	Q 318	DTA143ES	TRANSISTOR		
	Q 601	2SA952/LK/-T	TRANSISTOR		
	Q 631	2SA952/LK/-T	TRANSISTOR		
⚠	Q 901	2SB772/QP/	T.RRANSISTOR		
⚠	Q 902	2SC2458(Y,GR)	TRANSISTOR	SW8V REG	
⚠	Q 903	8550C	TRANSISTOR		
	Q 904	2SC2458(Y,GR)	TRANSISTOR		
⚠	Q 904	2SC2458(Y,GR)	TRANSISTOR	SW8V REG	
	Q 906	8550C	TRANSISTOR		
	Q 907	2SC2458(Y,GR)	TRANSISTOR		
	Q 908	2SB772/QP/	T.RRANSISTOR		
	Q 909	2SC2458(Y,GR)	TRANSISTOR		
⚠	Q 911	2SC2458(Y,GR)	TRANSISTOR	CDB	
	QM 1	2SC2458(Y,GR)	TRANSISTOR		U,US,UX,UY,UT
	QM 2	2SC2458(Y,GR)	TRANSISTOR		U,US,UX,UY,UT
	R 1	QRD161J-104	C RESISTOR	100K 5% 1/4W	
	R 2	QRD161J-473	C RESISTOR	47K 5% 1/4W	
	R 3	QRD161J-270	C RESISTOR	270 5% 1/4W	EE
	R 3	QRD167J-4R7	C RESISTOR	4.7 5% 1/4W	U,US,UX,UY,UT
	R 3	QRD167J-4R7	C RESISTOR	4.7 5% 1/4W	B,E,EN,J
	R 7	QRD161J-104	C RESISTOR	100K 5% 1/4W	
	R 9	QRD161J-102	C RESISTOR	1.0K 5% 1/4W	
	R 13	QRD161J-104	C RESISTOR	100K 5% 1/4W	
	R 18	QRD161J-102	C RESISTOR	1.0K 5% 1/4W	
	R 20	QRD161J-102	C RESISTOR	1.0K 5% 1/4W	
	R 28	QRD161J-512	C RESISTOR	5.1K 5% 1/4W	
	R 30	QRD161J-104	C RESISTOR	100K 5% 1/4W	
	R 31	QRD161J-223	C RESISTOR	22K 5% 1/4W	
	R 32	QRD161J-223	C RESISTOR	22K 5% 1/4W	
	R 33	QRD161J-101	C RESISTOR	100 5% 1/4W	
	R 34	QRD161J-393	C RESISTOR	39K 5% 1/4W	
	R 35	QRD161J-393	C RESISTOR	39K 5% 1/4W	
	R 37	QRD161J-560	C RESISTOR	56 5% 1/4W	
	R 38	QRE141J-183Y	C RESISTOR	18K 5% 1/4W	
	R 39	QRE141J-183Y	C RESISTOR	18K 5% 1/4W	
	R 44	QRD161J-222	C RESISTOR	2.2K 5% 1/4W	
	R 46	QRE141J-103Y	C RESISTOR	10K 5% 1/4W	
	R 47	QRD161J-221	C RESISTOR	220 5% 1/4W	
	R 48	QRD161J-102	C RESISTOR	1.0K 5% 1/4W	
	R 52	QRD161J-472	C RESISTOR	4.7K 5% 1/4W	
	R 54	QRD161J-222	C RESISTOR	2.2K 5% 1/4W	
	R 55	QRD161J-222	C RESISTOR	2.2K 5% 1/4W	
	R 56	QRD167J-332	C RESISTOR	3.3K 5% 1/4W	
	R 57	QRD161J-102	C RESISTOR	1.0K 5% 1/4W	
	R 59	QRD161J-102	C RESISTOR	1.0K 5% 1/4W	
	R 60	QRD161J-102	C RESISTOR	1.0K 5% 1/4W	
	R 61	QRD161J-102	C RESISTOR	1.0K 5% 1/4W	
	R 64	QRD161J-102	C RESISTOR	1.0K 5% 1/4W	
	R 104	QRD167J-332	C RESISTOR	3.3K 5% 1/4W	

BLOCK NO. 01

⚠	REF.	PARTS NO.	PARTS NAME	REMARKS	SUFFIX
	R 106	QRD161J-393	C RESISTOR	39K 5% 1/4W	
	R 107	QRD161J-820	C RESISTOR	82 5% 1/4W	
	R 108	QRD161J-153	C RESISTOR	15K 5% 1/4W	
	R 119	QRD161J-104	C RESISTOR	100K 5% 1/4W	
⚠	R 121	QRD161J-820	C RESISTOR	82 5% 1/4W	
	R 122	QRD161J-2R2	C RESISTOR	2.2 5% 1/4W	
	R 123	QRD161J-101	C RESISTOR	100 5% 1/4W	
	R 124	QRD161J-222	C RESISTOR	2.2K 5% 1/4W	
	R 125	QRE141J-103Y	C RESISTOR	10K 5% 1/4W	
	R 127	QRD167J-332	C RESISTOR	3.3K 5% 1/4W	
	R 131	QRE141J-183Y	C RESISTOR	18K 5% 1/4W	
	R 132	QRE141J-103Y	C RESISTOR	10K 5% 1/4W	
	R 133	QRD161J-182	C RESISTOR	1.8K 5% 1/4W	
	R 134	QRD161J-392	C RESISTOR	3.9K 5% 1/4W	
	R 135	QRD161J-473	C RESISTOR	47K 5% 1/4W	
	R 137	QRD167J-682	C RESISTOR	6.8K 5% 1/4W	
	R 204	QRD167J-332	C RESISTOR	3.3K 5% 1/4W	
	R 206	QRD161J-393	C RESISTOR	39K 5% 1/4W	
	R 207	QRD161J-820	C RESISTOR	82 5% 1/4W	
	R 208	QRD161J-153	C RESISTOR	15K 5% 1/4W	
	R 219	QRD161J-104	C RESISTOR	100K 5% 1/4W	
⚠	R 221	QRD161J-820	C RESISTOR	82 5% 1/4W	
	R 222	QRD161J-2R2	C RESISTOR	2.2 5% 1/4W	
	R 223	QRD161J-101	C RESISTOR	100 5% 1/4W	
	R 224	QRD161J-222	C RESISTOR	2.2K 5% 1/4W	
	R 225	QRE141J-103Y	C RESISTOR	10K 5% 1/4W	
	R 227	QRD167J-332	C RESISTOR	3.3K 5% 1/4W	
	R 231	QRE141J-183Y	C RESISTOR	18K 5% 1/4W	
	R 232	QRE141J-103Y	C RESISTOR	10K 5% 1/4W	
	R 233	QRD161J-182	C RESISTOR	1.8K 5% 1/4W	
	R 234	QRD161J-392	C RESISTOR	3.9K 5% 1/4W	
	R 235	QRD161J-473	C RESISTOR	47K 5% 1/4W	
	R 237	QRD167J-682	C RESISTOR	6.8K 5% 1/4W	
	R 302	QRE141J-103Y	C RESISTOR	10K 5% 1/4W	
	R 303	QRD161J-475	C RESISTOR	4.7M 5% 1/4W	
	R 304	QRE141J-103Y	C RESISTOR	10K 5% 1/4W	
	R 305	QRD161J-182	C RESISTOR	1.8K 5% 1/4W	
	R 306	QRD161J-182	C RESISTOR	1.8K 5% 1/4W	
	R 307	QRD167J-332	C RESISTOR	3.3K 5% 1/4W	
	R 310	QRD161J-123	C RESISTOR	12K 5% 1/4W	
	R 311	QRD161J-101	C RESISTOR	100 5% 1/4W	
	R 312	QRD161J-431Y	C RESISTOR	430 5% 1/4W	
	R 313	QRD161J-120	C RESISTOR	12 5% 1/4W	
	R 316	QRD167J-332	C RESISTOR	3.3K 5% 1/4W	
	R 317	QRE141J-103Y	C RESISTOR	10K 5% 1/4W	
	R 318	QRD161J-101	C RESISTOR	100 5% 1/4W	
	R 320	QRD167J-562	C RESISTOR	5.6K 5% 1/4W	
	R 321	QRD167J-562	C RESISTOR	5.6K 5% 1/4W	
	R 328	QRE141J-103Y	C RESISTOR	10K 5% 1/4W	
	R 332	QRE141J-103Y	C RESISTOR	10K 5% 1/4W	
	R 334	QRD161J-102	C RESISTOR	1.0K 5% 1/4W	U,US,UX,UY,UT
	R 356	QRE141J-103Y	C RESISTOR	10K 5% 1/4W	
	R 360	QRE141J-103Y	C RESISTOR	10K 5% 1/4W	
	R 361	QRD161J-474	C RESISTOR	470K 5% 1/4W	
	R 371	QRE141J-103Y	C RESISTOR	10K 5% 1/4W	

BLOCK NO. 01

⚠	REF.	PARTS NO.	PARTS NAME	REMARKS	SUFFIX
	R 372	QRD167J-332	C RESISTOR	3.3K 5% 1/4W	
	R 373	QRD161J-101	C RESISTOR	100 5% 1/4W	
	R 601	QRD161J-123	C RESISTOR	12K 5% 1/4W	
	R 603	QRD161J-125	C RESISTOR	1.2M 5% 1/4W	
	R 605	QRD167J-134	C RESISTOR	130K 5% 1/4W	
	R 606	QRD161J-913	C RESISTOR	91K 5% 1/4W	
	R 607	QRD161J-273	C RESISTOR	27K 5% 1/4W	
	R 609	QRD161J-114	C RESISTOR	110K 5% 1/4W	
	R 610	QRD161J-154	C RESISTOR	150K 5% 1/4W	
	R 612	QRE141J-103Y	C RESISTOR	10K 5% 1/4W	
	R 613	QRD167J-121	C RESISTOR	120 5% 1/4W	
	R 614	QRD161J-100	C RESISTOR	10 5% 1/4W	
	R 615	QRD161J-120	C RESISTOR	12 5% 1/4W	
	R 616	QRD161J-910Y	C RESISTOR	91 5% 1/4W	
	R 621	QRD161J-330	C RESISTOR	33 5% 1/4W	
	R 622	QRD161J-330	C RESISTOR	33 5% 1/4W	
	R 623	QRD161J-330	C RESISTOR	33 5% 1/4W	
	R 631	QRD161J-331	C RESISTOR	330 5% 1/4W	
	R 632	QRD161J-101	C RESISTOR	100 5% 1/4W	
	R 633	QRD161J-273	C RESISTOR	27K 5% 1/4W	
	R 641	QRD161J-563	C RESISTOR	56K 5% 1/4W	
	R 642	QRD161J-123	C RESISTOR	12K 5% 1/4W	
	R 643	QRD161J-822	C RESISTOR	8.2K 5% 1/4W	
	R 644	QRD161J-223	C RESISTOR	22K 5% 1/4W	
	R 645	QRD161J-223	C RESISTOR	22K 5% 1/4W	
	R 646	QRD161J-182	C RESISTOR	1.8K 5% 1/4W	
	R 647	QRD167J-562	C RESISTOR	5.6K 5% 1/4W	
	R 651	QRD161J-102	C RESISTOR	1.0K 5% 1/4W	
	R 652	QRD161J-102	C RESISTOR	1.0K 5% 1/4W	
	R 653	QRD161J-102	C RESISTOR	1.0K 5% 1/4W	
	R 654	QRD161J-102	C RESISTOR	1.0K 5% 1/4W	
	R 659	QRD161J-271	C RESISTOR	270 5% 1/4W	
	R 661	QRD161J-104	C RESISTOR	100K 5% 1/4W	
	R 663	QRD161J-124	C RESISTOR	120K 5% 1/4W	
	R 664	QRD161J-471	C RESISTOR	470 5% 1/4W	
	R 666	QRD161J-220	C RESISTOR	22 5% 1/4W	
	R 671	QRD161J-102	C RESISTOR	1.0K 5% 1/4W	
	R 672	QRD161J-102	C RESISTOR	1.0K 5% 1/4W	
	R 901	QRD161J-472	C RESISTOR	4.7K 5% 1/4W	
	R 902	QRD161J-563	C RESISTOR	56K 5% 1/4W	
	R 903	QRD161J-101	C RESISTOR	100 5% 1/4W	
	R 904	QRD161J-821	C RESISTOR	820 5% 1/4W	
	R 906	QRD161J-563	C RESISTOR	56K 5% 1/4W	
	R 907	QRD161J-102	C RESISTOR	1.0K 5% 1/4W	
	R 908	QRD167J-332	C RESISTOR	3.3K 5% 1/4W	
	R 909	QRD161J-102	C RESISTOR	1.0K 5% 1/4W	
	R 910	QRD161J-104	C RESISTOR	100K 5% 1/4W	
	R 911	QRD161J-472	C RESISTOR	4.7K 5% 1/4W	
	R 912	QRD161J-102	C RESISTOR	1.0K 5% 1/4W	
	R 913	QRD167J-562	C RESISTOR	5.6K 5% 1/4W	
	R 914	QRZ0077-4R7X	F RESISTOR	4.7 1/0W	
	R 915	QRD161J-101	C RESISTOR	100 5% 1/4W	
	R 916	QRD161J-821	C RESISTOR	820 5% 1/4W	
	R 917	QRD161J-220	C RESISTOR	22 5% 1/4W	
	R 919	QRD161J-563	C RESISTOR	56K 5% 1/4W	

BLOCK NO. 01

⚠	REF.	PARTS NO.	PARTS NAME	REMARKS	SUFFIX
	R 920	QRD161J-472	C RESISTOR	4.7K 5% 1/4W	
	R 922	QRE141J-103Y	C RESISTOR	10K 5% 1/4W	
	R 999	QRD161J-331	C RESISTOR	330 5% 1/4W	
	RM 1	QRD161J-222	C RESISTOR	2.2K 5% 1/4W	U,US,UX,UY,UT
	RM 2	QRD167J-682	C RESISTOR	6.8K 5% 1/4W	U,US,UX,UY,UT
	RM 4	QRD161J-820	C RESISTOR	82 5% 1/4W	U,US,UX,UY,UT
	RM 5	QRD161J-564	C RESISTOR	560K 5% 1/4W	U,US,UX,UY,UT
	RM 6	QRD167J-332	C RESISTOR	3.3K 5% 1/4W	U,US,UX,UY,UT
	RM 7	QRD161J-681	C RESISTOR	680 5% 1/4W	U,US,UX,UY,UT
	RM 8	QRD161J-472	C RESISTOR	4.7K 5% 1/4W	U,US,UX,UY,UT
	RM 9	QRD161J-563	C RESISTOR	56K 5% 1/4W	U,US,UX,UY,UT
	RM 10	QRD161J-202	C RESISTOR	2.0K 5% 1/4W	U,US,UX,UY,UT
	S 303	SK-23E01-G9	SLIDE SWITCH	BEAT CUT SW(TKR	
	S 901	QSW0555-001	VOLT. SELECTOR		U,US,UX,UY,UT
	T 2	VQT7A21-112	IFT		
	T 301	OH-812320	BIAS OSC COIL		
	TC 2	QAT3114-200Z	T CAPACITOR	MW RF	
	TP 2	VMZ0015-002	PIN SOCKET	GND	
	X 1	QAX0402-001	CRYSTAL		
	X 651	CSA16.93MXZ040T	CERA LOCK	16.9344MHZ	
	ZD903	MTZ6.2JB	ZENER DIODE		
	ZD904	MTZ5.6JB	ZENER DIODE		
	ZD905	MTZJ7.5C-T2	ZENER DIODE		

System CPU Board for RC-QN1 (VMW2422)

BLOCK NO. 02

⚠	REF.	PARTS NO.	PARTS NAME	REMARKS	SUFFIX
	C 702	NCS21HJ-240	C.CAPACITOR	24PF 5% 50V	
	C 703	NCS21HJ-360AY	C CAPACITOR	36PF 5% 50V	
	C 704	NCS21HJ-360AY	C CAPACITOR	36PF 5% 50V	
	C 705	NCS21HJ-240	C.CAPACITOR	24PF 5% 50V	
	C 706	NCB21HK-102AY	C CAPACITOR	1000PF 10% 50V	
	C 707	NCF21EZ-104AYU	C CAPACITOR	.10MF +80:-20%	
	C 708	QET41AM-227	E CAPACITOR	220MF 20% 10V	
	C 709	QETBOJM-228	E CAPACITOR	2200MF 20% 6.3V	
	C 710	NCB21HK-103AY	C CAPACITOR	.010MF 10% 25V	
	C 711	QER41CM-106	E CAPACITOR	10MF 20% 16V	
	C 712	QER41HM-225	E CAPACITOR	2.2MF 20% 50V	
	C 719	NCB21HK-102AY	C CAPACITOR	1000PF 10% 50V	
	C 720	NCB21HK-102AY	C CAPACITOR	1000PF 10% 50V	
	C 721	NCB21HK-103AY	C CAPACITOR	.010MF 10% 25V	
	C 722	NCS21HJ-101AY	C CAPACITOR	100PF 5% 50V	
	C 723	NCS21HJ-101AY	C CAPACITOR	100PF 5% 50V	
	C 724	NCS21HJ-101AY	C CAPACITOR	100PF 5% 50V	
	C 725	NCS21HJ-101AY	C CAPACITOR	100PF 5% 50V	
	C 727	QET41AM-476	E CAPACITOR	REMOCON	
	C 732	NCF21EZ-104AYU	C CAPACITOR	.10MF +80:-20%	
	C 738	NCS21HJ-151X	C CAPACITOR	150PF 5% 50V	
	CN701	QGF1212F1-17	FFC/FPC CONNE	CTL(TO MAIN)	
	CN702	VMC0040-005	W TO B CONNE		
	CN703	QGF1212F1-12	FFC CONNE	CTL(TO MAIN)	
	CN704	EMV5133-002K	CONNECTOR	CTL(TO DOOR SW)	
	D 702	1SS133-T2	DIODE		
	D 703	UZ5.1BSC-T2	ZENER DIODE		
	D 706	1SS133-T2	DIODE		
	D 707	1SS133-T2	DIODE		
	D 708	1SS133-T2	DIODE		
	D 851	LT0311G-41	LED GREEN STAND	KING BRIGHT	
	D 852	LT0321-41	ON LED RTP		
	DI701	QLD0046-001	LCD MODULE	LCD DISPLAY	
	IC701	MN171603JACA	IC	KEY HAI HENKOU	
	IC703	GP1U281X	IR DETECT UNIT	REMOCON	
	K 701	VQZ0048-009	INDUCTOR		
	K 702	VQZ0048-009	INDUCTOR		
	K 703	VQZ0048-009	INDUCTOR	VMW1440-003 I/M	
	L 701	3A839N	INDUCTOR		
	L 702	3A839N	INDUCTOR		
	Q 701	2SC2714/O/-X	TRANSISTOR		
	Q 702	2SC2714/O/-X	TRANSISTOR		
	Q 703	2SC2412K/R/-X	TRANSISTOR		
	Q 704	DTC144EKA-X	TRANSISTOR		
	Q 705	2SA1037AKT146	CHIP TRANSISTOR		
	Q 706	DTC143TKA-X	DIGI TRANSISTOR		
	Q 851	2SA1037AKT146	CHIP TRANSISTOR	POWER	
	R 701	NRSA02J-102NY	MG RESISTOR	1.0K 5% 1/10W	
	R 702	NRSA02J-822NY	MG RESISTOR	8.2K 5% 1/10W	
	R 703	NRSA02J-822NY	MG RESISTOR	8.2K 5% 1/10W	
	R 704	NRSA02J-102NY	MG RESISTOR	1.0K 5% 1/10W	
	R 706	NRSA02J-103NY	MG RESISTOR	10K 5% 1/10W	
	R 707	NRSA02J-103NY	MG RESISTOR	10K 5% 1/10W	
	R 708	NRSA02J-103NY	MG RESISTOR	10K 5% 1/10W	
	R 709	NRSA02J-223NY	MG RESISTOR	22K 5% 1/10W	

BLOCK NO. 02

⚠	REF.	PARTS NO.	PARTS NAME	REMARKS	SUFFIX
	R 710	NRSA02J-104X	MG RESISTOR	100K 5% 1/10W	
	R 711	NRSA02J-223NY	MG RESISTOR	22K 5% 1/10W	
	R 712	NRSA02J-103NY	MG RESISTOR	10K 5% 1/10W	
	R 714	NRSA02J-393NY	MG RESISTOR	39K 5% 1/10W	
	R 715	NRSA02J-333NY	MG RESISTOR	33K 5% 1/10W	
	R 716	NRSA02J-473NY	MG RESISTOR	47K 5% 1/10W	
	R 717	NRSA02J-333NY	MG RESISTOR	33K 5% 1/10W	
	R 718	NRSA02J-103NY	MG RESISTOR	10K 5% 1/10W	
	R 719	NRSA02J-104X	MG RESISTOR	100K 5% 1/10W	
	R 720	NRSA02J-104X	MG RESISTOR	100K 5% 1/10W	
	R 721	NRSA02J-222NY	MG RESISTOR	2.2K 5% 1/10W	
	R 723	NRSA02J-103NY	MG RESISTOR	10K 5% 1/10W	
	R 724	NRSA02J-222NY	MG RESISTOR	10K NG	
	R 725	NRSA02J-222NY	MG RESISTOR	10K NG	
	R 726	NRSA02J-222NY	MG RESISTOR	10K NG	
	R 727	NRSA02J-222NY	MG RESISTOR	10K NG	
	R 728	NRSA02J-103NY	MG RESISTOR	10K 5% 1/10W	
	R 729	NRSA02J-473NY	MG RESISTOR	47K 5% 1/10W	
	R 730	NRSA02J-103NY	MG RESISTOR	10K 5% 1/10W	
	R 732	NRSA02J-104X	MG RESISTOR	100K 5% 1/10W	
	R 733	NRSA02J-104X	MG RESISTOR	100K 5% 1/10W	
	R 734	NRSA02J-104X	MG RESISTOR	100K 5% 1/10W	
	R 735	NRSA02J-103NY	MG RESISTOR	10K 5% 1/10W	
	R 738	NRSA02J-103NY	MG RESISTOR	10K 5% 1/10W	
	R 739	NRSA02J-223NY	MG RESISTOR	22K 5% 1/10W	
	R 740	NRSA02J-103NY	MG RESISTOR	10K 5% 1/10W	
	R 741	NRSA02J-103NY	MG RESISTOR	10K 5% 1/10W	
	R 742	NRSA02J-222NY	MG RESISTOR	2.2K 5% 1/10W	
	R 746	NRSA02J-223NY	MG RESISTOR	22K 5% 1/10W	
	R 748	NRSA02J-223NY	MG RESISTOR	REMOCON	
	R 749	NRSA02J-473NY	MG RESISTOR	47K 5% 1/10W	
	R 750	NRSA02J-103NY	MG RESISTOR	10K 5% 1/10W	
	R 751	NRSA02J-103NY	MG RESISTOR	10K 5% 1/10W	
	R 752	NRSA02J-103NY	MG RESISTOR	10K 5% 1/10W	
	R 753	NRSA02J-222NY	MG RESISTOR	2.2K 5% 1/10W	
	R 754	NRSA02J-103NY	MG RESISTOR	10K 5% 1/10W	
	R 756	NRSA02J-223NY	MG RESISTOR	22K 5% 1/10W	
	R 758	NRSA02J-222NY	MG RESISTOR	2.2K 5% 1/10W	
	R 759	NRSA02J-102NY	MG RESISTOR	1.0K 5% 1/10W	
	R 760	NRSA02J-102NY	MG RESISTOR	1.0K 5% 1/10W	
	R 761	NRSA02J-222NY	MG RESISTOR	2.2K 5% 1/10W	
	R 762	NRSA02J-222NY	MG RESISTOR	2.2K 5% 1/10W	
	R 763	NRSA02J-222NY	MG RESISTOR	2.2K 5% 1/10W	
	R 767	NRSA02J-472NY	MG RESISTOR	4.7K 5% 1/10W	
	R 768	NRSA02J-103NY	MG RESISTOR	10K 5% 1/10W	
	R 770	NRSA02J-222NY	MG RESISTOR	2.2K 5% 1/10W	
	R 772	NRSA02J-102NY	MG RESISTOR	1.0K 5% 1/10W	
	R 773	NRSA02J-103NY	MG RESISTOR	10K 5% 1/10W	
	R 774	NRSA02J-102NY	MG RESISTOR	1.0K 5% 1/10W	
	R 775	NRSA02J-102NY	MG RESISTOR	1.0K 5% 1/10W	
	R 776	NRSA02J-102NY	MG RESISTOR	1.0K 5% 1/10W	
	R 777	NRSA02J-102NY	MG RESISTOR	1.0K 5% 1/10W	
	R 778	NRSA02J-102NY	MG RESISTOR	1.0K 5% 1/10W	
	R 779	NRSA02J-102NY	MG RESISTOR	1.0K 5% 1/10W	
	R 785	NRSA02J-154NY	MG RESISTOR	1.4M 5% 1/10W	EE

BLOCK NO. 02

⚠	REF.	PARTS NO.	PARTS NAME	REMARKS	SUFFIX
	R 785	NRSA02J-222NY	MG RESISTOR	2.2K 5% 1/10M	J,UY
	R 785	NRSA02J-822NY	MG RESISTOR	8.8K 5% 1/10W	U,US,UX,UT
	R 785	NRSA02J-223NY	MG RESISTOR	22K 5% 1/10W	B,E,EN
	R 789	NRSA02J-103NY	MG RESISTOR	10K 5% 1/10W	B,E,EE,EN
	R 789	NRSA02J-103NY	MG RESISTOR	10K 5% 1/10W	U,US,UX,UY,UT
	R 796	NRSA02J-104X	MG RESISTOR	FOR Q705	
	R 797	NRSA02J-472NY	MG RESISTOR	4.7K 5% 1/10W	
	R 851	NRSA02J-152X	MG RESISTOR	1.5K 5% 1/10W	
	R 852	NRSA02J-182NY	MG RESISTOR	1.8K 5% 1/10W	
	R 853	NRSA02J-272NY	MG RESISTOR	2.7K 5% 1/10W	
	R 854	NRSA02J-392NY	MG RESISTOR	3.9K 5% 1/10W	
	R 855	NRSA02J-682X	MG RESISTOR	6.8K 5% 1/10W	
	R 856	NRSA02J-123NY	MG RESISTOR	12K 5% 1/10W	
	R 857	NRSA02J-393NY	MG RESISTOR	39K 5% 1/10W	
	R 858	NRSA02J-562NY	MG RESISTOR	5.6K 5% 1/10W	
	R 859	NRSA02J-183NY	MG RESISTOR	18K 5% 1/10W	
	R 860	NRSA02J-331NY	MG RESISTOR	330 5% 1/10W	
	R 861	NRSA02J-681NY	MG RESISTOR	680 5% 1/10W	
	R 864	NRSA02J-562NY	MG RESISTOR	5.6K 5% 1/10W	
	S 851	QSW0707-001Z	TACT SWITCH	SOUND	
	S 852	QSW0707-001Z	TACT SWITCH	PRESET	
	S 853	QSW0707-001Z	TACT SWITCH	DOWN	
	S 854	QSW0707-001Z	TACT SWITCH	TUNER/BAND	
	S 855	QSW0707-001Z	TACT SWITCH	STOP	
	S 856	QSW0707-001Z	TACT SWITCH	CD	
	S 857	QSW0707-001Z	TACT SWITCH		
	S 858	QSW0707-001Z	TACT SWITCH	REPEAT	
	S 865	QSW0707-001Z	TACT SWITCH	POWER	
	S 866	PS-22F23-A3.3NS	PUSH SWITCH	CD OPEN/CLOSE	
	VR302	QVQ0121-A54	MAIN VOL		
	X 701	QAX0410-001Z	CERA LOCK		

-MEMO-

Packing Materials and Accessories List

Block No. M 4 M M
Block No. M 5 M M

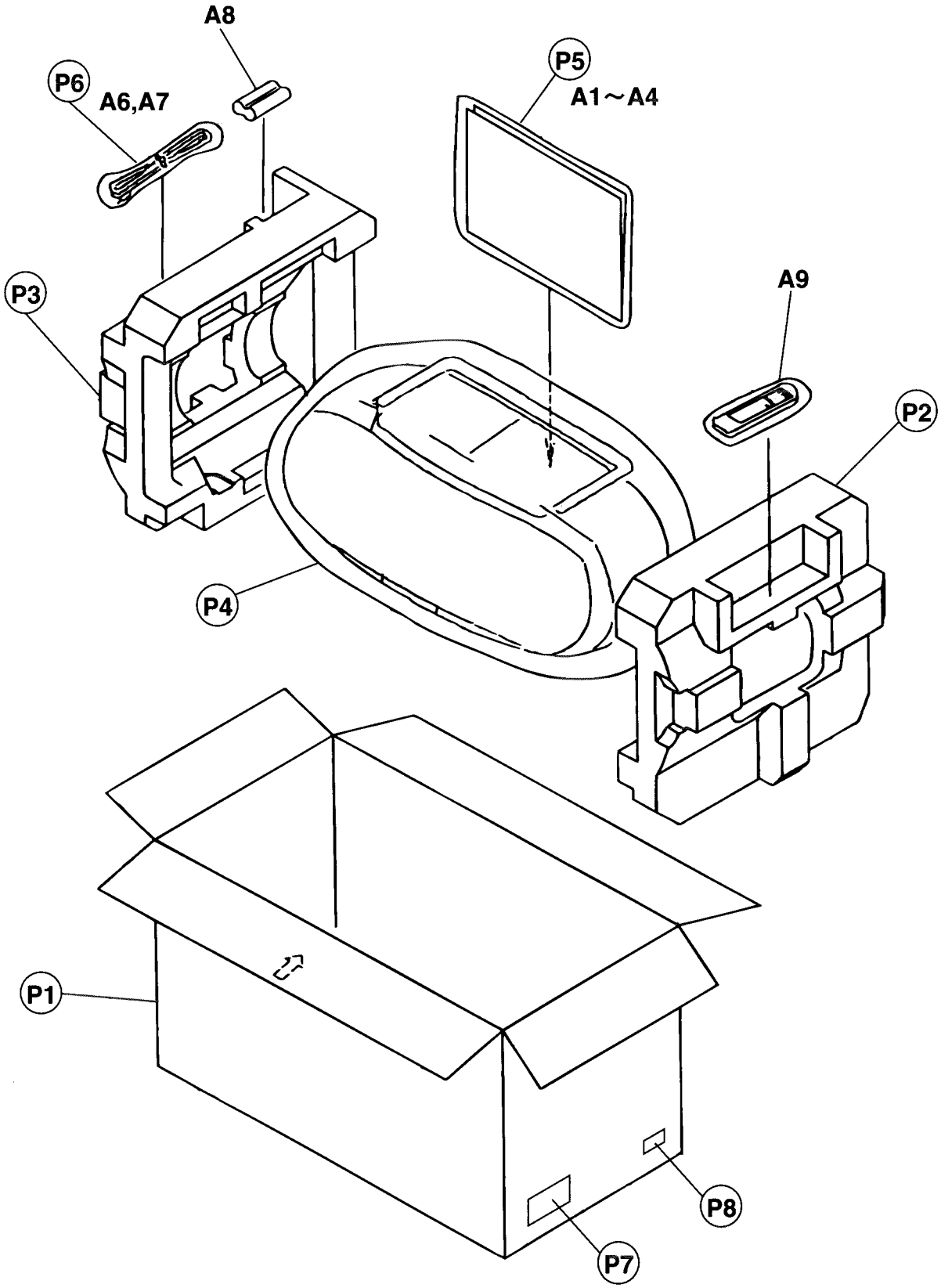

BLOCK NO. M4MM

⚠	REF.	PARTS NO.	PARTS NAME	REMARKS	QTY	SUFFIX	CLR
	P 1	LV30187-005A	CARTON		1	J	BK
		LV30187-006A	CARTON		1	U,US,UX	BK
		LV30187-007A	CARTON		1	J	WT
		LV30187-008A	CARTON		1	U,US,UX,UY	WT
		LV30187-006A	CARTON		1	B,E,EE,EN	BK
		LV30187-008A	CARTON		1	B,E,EN,UT	WT
	P 2	LV10052-001A	CUSHION(L)		1		
	P 3	LV10053-001A	CUSHION(R)		1		
	P 4	VPE3026-009	POLY BAG	SET	1		
	P 5	VPE3005-001	POLY BAG	INST	1		
	P 6	QPA01202505	POLY BAG	POWER CORD	1	UY,UT	
		QPA01202505	POLY BAG	POWER CORD	1	E,EE,EN,J	
		QPGA015-03503	POLY BAG	POWER CORD	1	B	
		QPA01202505	POLY BAG	POWER CORD	1	U,US,UX	
	P 7	----------	CARTON LABEL		1		
	P 8	----------	UY LABEL		1	UY	
		----------	UT LABEL		1	UT	

BLOCK NO. M5MM

⚠	REF.	PARTS NO.	PARTS NAME	REMARKS	QTY	SUFFIX	CLR
	A 1	LVT0048-007A	INSTRUCTIONS		1	U,US,UX	
		LVT0048-009A	INSTRUCTIONS		1	UX	
		LVT0048-006A	INSTRUCTIONS		1	EE	
		LVT0048-007A	INSTRUCTIONS		1	UY,UT	
		LVT0048-001C	INSTRUCTIONS		1	J	
		LVT0048-003A	INSTRUCTIONS		1	E	
		LVT0048-005A	INSTRUCTIONS		1	EN	
		LVT0048-002A	INSTRUCTIONS		1	B	
	A 2	E43486-340B	SAFETY INST		1	B	
		BT-20044G	SAFTY SHEET		1	J	
	A 3	BT-51009-3	WARRANTY CARD		1	J	
		BT-52001-4	WARRANTY CARD		1	J	
		BT-54008-1	WARRANTY CARD		1	B,E,EN	
	A 4	BT-20137	SERVICE NETWORK		1	J	
		BT-20071B	SERVICE NETWORK		1	J	
⚠	A 6	QMP39F0-183	POWER CORD		1	E,EE,EN,U,US	
⚠		QMP7350-150	POWER CORD		1	UX,UT	
⚠		QMP1F00-183	POWER CORD		1	J	
⚠		QMPS050-183-JC	POWER CORD		1	UY	
⚠		QMP5520-183BS	POWER CORD		1	B	
⚠	A 7	ENZ2202-001	SIEMENS PLUG		1	U,US	
⚠		ENZ2203-001	SIEMENS PLUG		1	UX,UT	
	A 8	UM-3(DV)-2PSA	BATTERY		1	U,US,UX	
		UM-3(DV)-2PSA	BATTERY		1	UY,UT	
		UM-3(DV)-2PSA	BATTERY		1	B,E,EE,EN	
	A 9	RM-RXQN1E	REMOCON UNIT		1	B,E,EE,EN	
		RM-RXQN1	REMOCON UNIT		1	J	
		RM-RXQN1E	REMOCON UNIT		1	U,US,UX	
		RM-RXQN1E	REMOCON UNIT		1	UY,UT	

-MEMO-

PARTS LIST

[RC-QN2BK]

* All printed circuit boards and its assemblies are not available as service parts.

Area Suffix

B ..... U.K.
E ..... Continental Europe
EE ..... Eastern Europe
EN ..... Northern Europe
J ..... The U.S.A.
US ..... Singapore
UX ..... Saudi Arabia
UY ..... Argentina
U ..... Other Areas

- Contents -

General Exploded View and Parts List 4-2
Exploded View of Cassette Mechanism and Parts 4-4
Exploded View of CD Mechanism and Parts List 4-6
Electrical Parts List 4-7
Packing Materials and Accessories List 4-14

General Exploded View and Parts List

Block No. M1MM

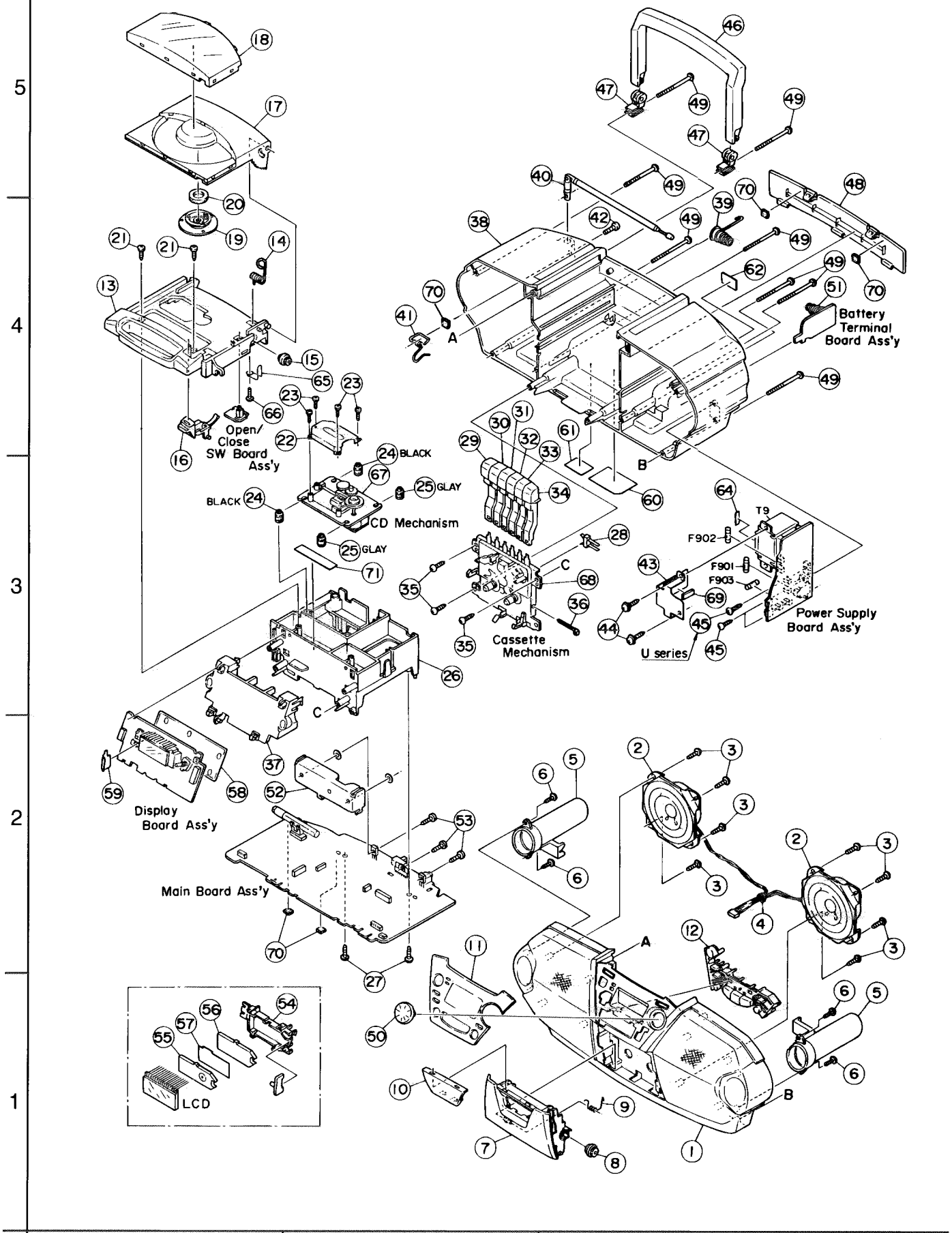

BLOCK NO. M1MM

⚠	REF.	PARTS NO.	PARTS NAME	REMARKS	QTY	SUFFIX	CLR
	1	LV10085-001A	FRONT CABI ASSY		1	J	
		LV10085-002A	FRONT CABI ASSY		1	B,E,EN	
		LV10085-002A	FRONT CABI ASSY		1	U,US,UX,UY	
	2	LE10010-006A	SPEAKER		2		
	3	SBSF3010Z	SCREW	FOR SPEAKER	8		
	4	E33754-001	TIE BAND		1		
	5	LV30169-001A	DUCT		2		
	6	SBSF3010Z	SCREW	FOR DUCT	4		
	7	LV10046-001A	CASSETTE DOOR		1		
	8	VYH8007-001	DAMP GEAR	40010-604-00-01	1		
	9	LV40210-001A	DOOR SPRING		1		
	10	LV30171-002A	DOOR LENS		1		
	11	LV20078-003A	FRONT LENS		1	J	
		LV20078-004A	FRONT LENS		1	B,E,EN	
		LV20078-004A	FRONT LENS		1	U,US,UX,UY	
	12	LV10065-001A	PUSH BUTTON		1		
	13	LV10048-004A	CD CASE		1	B,E,EN	
		LV10048-003A	CD CASE		1	J	
		LV10048-004A	CD CASE		1	U,US,UX,UY	
	14	LV40211-003A	DOOR SPRING		1		
	15	VYH8007-001	DAMP GEAR	40010-604-00-01	1		
	16	LV30174-001A	OPEN BUTTON		1		
	17	LV10050-001A	CD DOOR		1		
	18	LV20081-002A	CD DOOR LENS		1		
	19	LV30175-001A	CLAMPER		1		
	20	VYH7313-005	MAGNET		1		
	21	SDSF3012M	SCREW	CD CASE	2		
	22	202-300002-00	PICK-UP COVER	52120-101-00-01	1		
	23	SDSF2006M	SCREW		4		
	24	E75609-001	INSULATOR	BLACK	2		
	25	E75609-002	INSULATOR	GRAY	2		
	26	LV10047-002A	CD HOLDER		1		
	27	SBSF3010Z	SCREW		2		
	28	640101161T	LEAF SWITCH		1		
	29	LV20104-001A	MECHA.BUTTON(A)	PAUSE	1		
	30	LV20104-002A	MECHA.BUTTON(B)	STOP	1		
	31	LV20104-003A	MECHA.BUTTON(C)	FF	1		
	32	LV20104-004A	MECHA.BUTTON(D)	REW	1		
	33	LV20104-005A	MECHA.BUTTON(E)	PLAY	1		
	34	LV20104-006A	MECHA.BUTTON(F)	REC	1		
	35	SBSF3010Z	SCREW		3		
	36	E33754-001	TIE BAND		1		
	37	LV20080-001A	PCB BRACKET		1		
	38	LV10051-002A	REAR CABINET		1	B,E,EN	
		LV10051-001A	REAR CABINET		1	J	
		LV10051-003A	REAR CABINET		1	U,US,UX,UY	
	39	VYH5657-006	BATTERY SPRING		1		
	40	215-021704-00	ROD ANTENNA	77001-002-01-02	1		
	41	LV40212-001A	CONTACT SPRING		1		
	42	SDSP3008N	SCREW	ANT	1		
	43	LV30570-001A	SHIELD		1		
	44	GBSF3014Z	T.SCREW	TRANS	2		
	45	SBSF3010Z	SCREW	AC INLET	2	B,E,EN,J	
		SBSF3010Z	SCREW	AC INLET	3	U,US,UX,UY	
	46	LV20083-001A	HANDLE		1		

BLOCK NO. M1MM

⚠	REF.	PARTS NO.	PARTS NAME	REMARKS	QTY	SUFFIX	CLR
	47	VYH8008-001	HANDLE SUPPORT	40010-503-00-01	2		
	48	LV20082-001A	BATT.COVER		1		
	49	SBSF3045Z	SCREW	R.CABI	8		
	50	LV30173-001A	JOG KNOB		1		
	51	VYH5483-001	BATTERY SPRING	BATT.PCB	1		
⚠	52	LV30176-001A	HEAT SINK		1		
	53	SDSF3008Z	SCREW	IC	3		
	54	LV30178-001A	LCD HOLDER		1		
	55	LV40200-001A	LCD LENS		1		
	56	LV40379-001A	LCD LENS 2		1		
	57	LV40213-001A	LCD SHEET		1		
	58	LV40449-001A	SHIELD		1		
	59	LV40497-001A	BLIND		1		
	60	LV30377-002A	NAME PLATE		1	B,E,EN	
		LV30377-001A	NAME PLATE		1	J	
		LV30377-004A	NAME PLATE		1	U,US,UY	
		LV30377-005A	NAME PLATE		1	UX	
	61	77200-154-01-01	HHS LABEL		1	J	
	62	VND5008-001	FCC LABEL		1	J	
		E70891-001	CLASS 1 LABEL		1	UY	
		E70891-001	CLASS 1 LABEL		1	B,E,EN,US	
	64	VND4003-057	FUSE LABEL	F902	1	J	
	65	202-003509-00	SPRING		1		
	66	SBSF3010Z	SCREW		1		
	67	----------	C.D MECHA ASS'Y		1		
	68	----------	C.MECHA ASS'Y		1		
	69	VYSH102-089	SPACER	FOR T.SHIELD	1		
	70	VYSA1R4-058	SPACER	PWB,BATT.COVER	5		
	71	E406709-001	LASER CAUTION		1	UY	
		E406709-001	LASER CAUTION		1	B,E,EN,US	
⚠	F 901	QMF51E2-R40SBS	FUSE		1	U,US,UX,UY	
⚠	F 902	QMF51E2-3R15J1	FUSE		1	B,E,EN	
⚠		QMF51E2-3R15J1	FUSE		1	U,US,UX,UY	
⚠		QMF51N2-3R0-J1	FUSE		1	J	
⚠	F 903	QMF51N2-3R0-J1	FUSE		1	J	
⚠	T 9	QQT0209-001	POWER TRANS		1	J	
⚠		QQT0209-003	POWER TRANS		1	U,US,UX,UY	
⚠		QQT0209-002	POWER TRANS		1	B,E,EN	

BLOCK NO. M2MM

⚠	REF.	PARTS NO.	PARTS NAME	REMARKS	QTY	SUFFIX	CLR
	1	M22114316T	BASE ASS'Y		1		
	2	19211409T	SWITCH ACTUATOR		1		
	3	19211408T	LOCK CAM		1		
	4	19211403T	REC BUTT.LEVER		1		
	5	19211419T	PLAY BUTT.LEVER		1		
	6	19211404T	REW BUTT. LEVER		1		
	7	19211405T	FF BUTTON LEVER		1		
	8	19211406T	STOP BUTT.LEVER		1		
	9	19211460T	PAUSE BUT.LEVER		1		
	10	19211413T	P CONT. SPRING		1		
	11	19211455T	PAUSE LEVER (E)		1		
	12	19211412T	SPRING		1		
	13	19211411T	PAUSE STOPPER		1		
	14	19211414T	TORSION SPRING		1		
	15	192101501ZT	CHASSIS ASS'Y		1		
	16	19211416T	TORSION SPRING		1		
	17	19211417T	TORSION SPRING		1		
	19	182101159T	E.KICK LEVER		1		
	20	19211420T	STOPPER		1		
	21	19211421T	TORSION SPRING		1		
	22	19211415T	TORSION SPRING		1		
	23	MSW-1541T	LEAF SWITCH		1		
	24	18210150T	PLAY BUTTON LEV		1		
	25	19210311T	HEAD PANEL		1		
	26	19210304AT	HEAD BASE		1		
	27	19210309T	PANEL P SPRING		1		
	28	19210305T	MAGNET HEAD ARM		1		
	29	18210307T	AZIMUTH SPRING		1		
	30	19211418AT	SPRING		1		
	31	19210310T	MG ARM SPRING		1		
	32	192104309T	P.ROLL. ARM ASY		1		
	35	19212604TT	SENSING LEVER		1		
	36	19212605T	TORSION SPRING		1		
	37	192126502ZT	GEAR PLATE ASSY		1		
	38	19212602T	CAM GEAR		1		
	40	192107304T	RF CLUTCH		1		
	41	19210703T	REW/F.F. BELT		1		
	43	192109303ZT	FLYWHEEL ASS'Y		1		
	45	18211070T	F.FORWARD GEAR		1		
	46	18211099T	BACK TENSION SP		1		
	47	192105304T	S. REEL ASS'Y		1		
	48	192105303T	T. REEL ASS'Y		1		
	49	19210506T	SENSOR		1		
	51	18211289AT	MOTOR BRACKET		1		
	53	19211202T	COLLAR SCREW		2		
	54	19211201T	MOTOR PULLEY		1		
	55	19210904T	MAIN BELT		1		
	56	19211203T	MB SCREW		1		
	58	19211301T	EJ. SLIDE LEVER		1		
	59	18211093T	PACK SORING		1		
	60	18211069T	REC.SAF.LEVER		1		
	62	MS15R-AA2N1	R/P HEAD		1		
	63	PHK-MSI-6A	E HEAD		1		
	64	60020217T	MOTOR		1		

BLOCK NO. M2MM

⚠	REF.	PARTS NO.	PARTS NAME	REMARKS	QTY	SUFFIX	CLR
	66	9P0420031T	SCREW M2X3		1		
	68	9B1020051T	SCREW M2X5		2		
	69	9C0720451T	SCREW M2X4.5		2		
	70	9B0120031T	SCREW M2X3		1		
	71	9P0120061T	SCREW M2X6		1		
	72	9F0820071T	AZIMUTH SCREW		1		
	75	9W0230010T	P WASHER		1		
	76	9W0250010T	P WASHER		1		
	77	9W0140010T	P WASHER		1		
	78	9W0113020T	P WASHER		1		
	80	19210201T	REC ARM		1		
	81	19211437T	P ARM COLLAR		2		
	82	64010138T	LEAF SWITCH		1		
	83	9P0420041T	SCREW(M2 X 4)		1		
	84	9P0420051T	SCREW(M2 X 5)		1		
	85	19211434T	P.ROLLER ARM		1		
	86	9P0820301T	SCREW M2X3		1		

Cassette Mechanism Ass'y and Parts List

Block No. M 2 M M

TN-21ZVC-1792

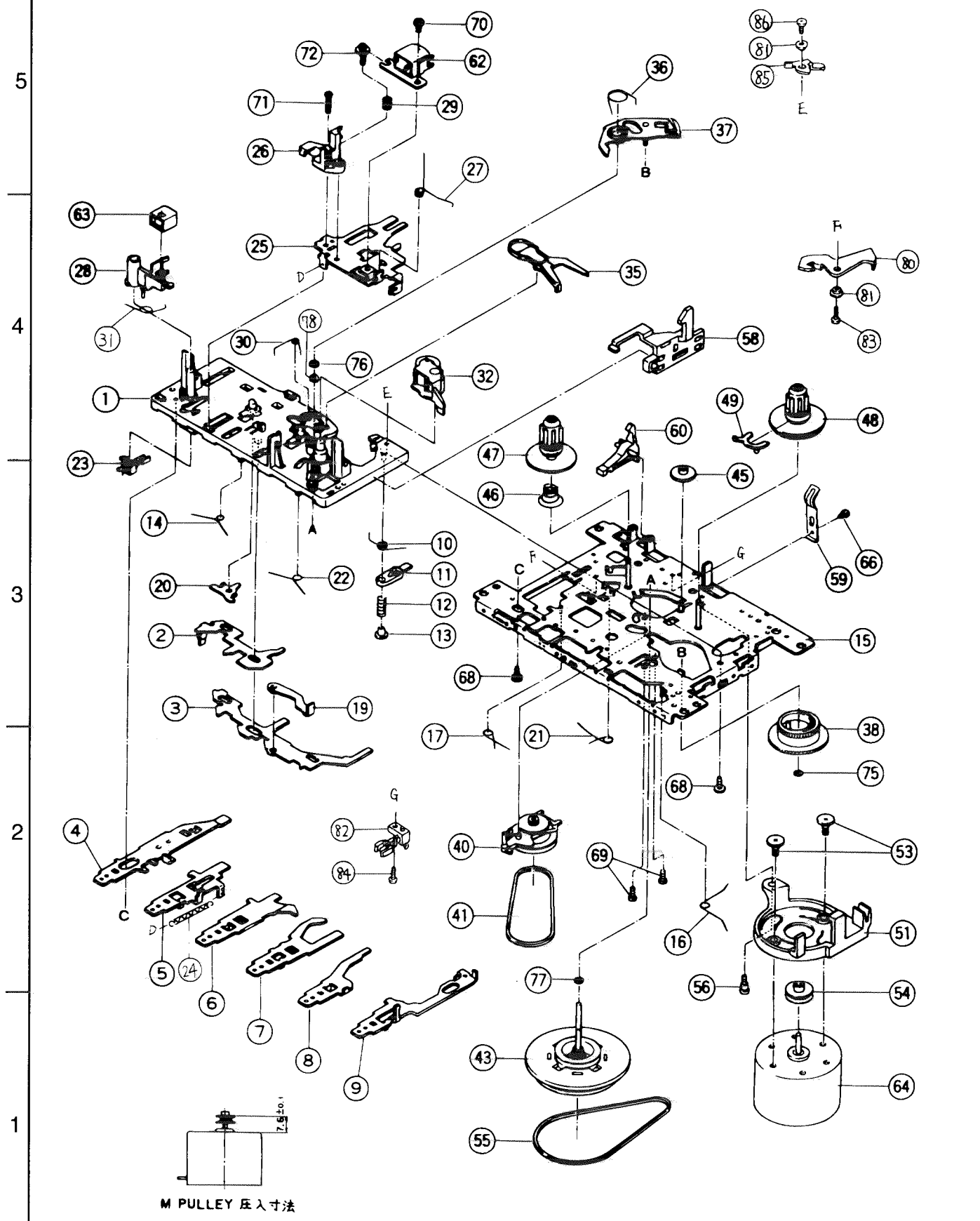

CD Mechanism Ass'y and Parts List

■Grease Point

Block No. M 3 M M

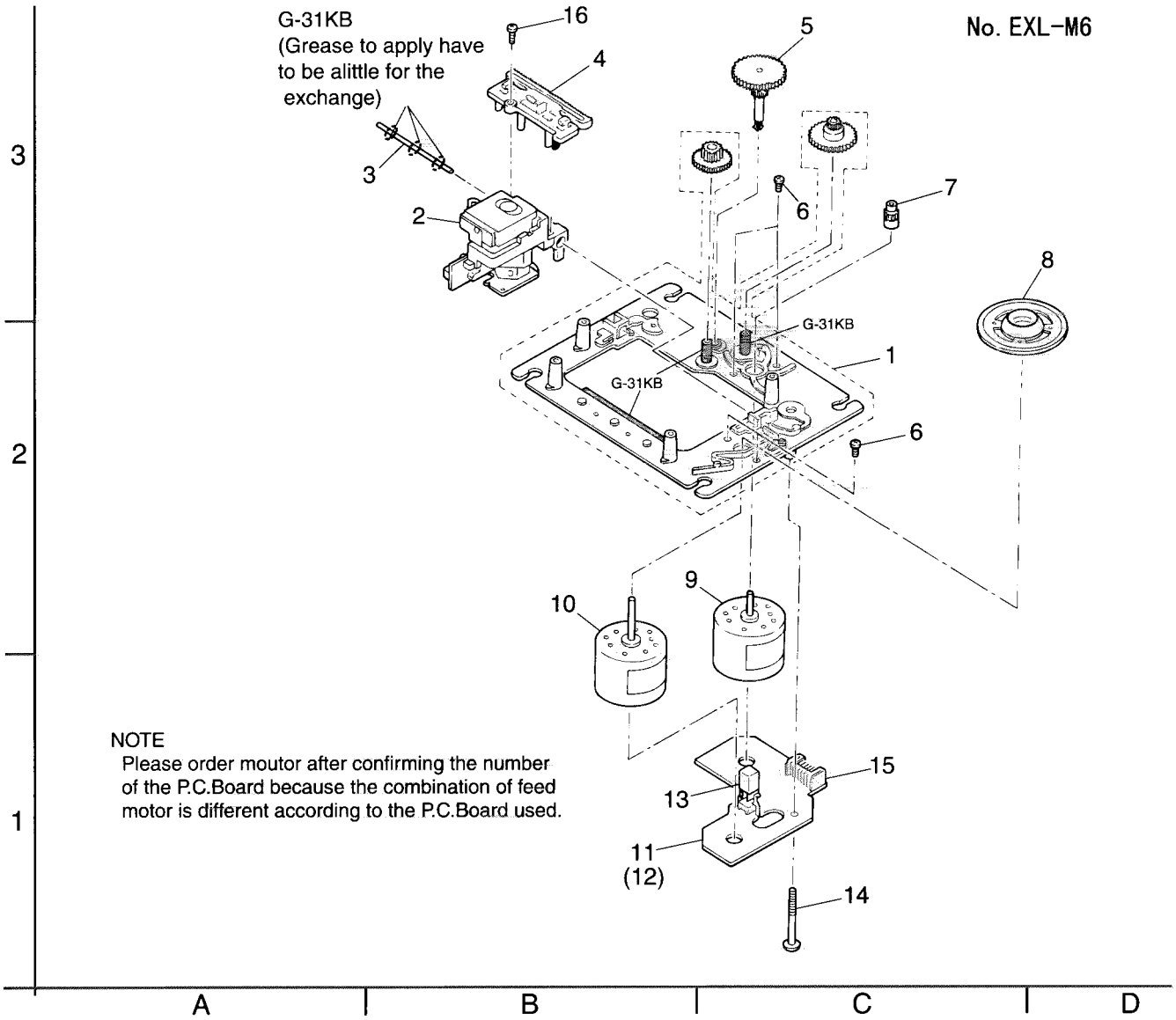

NOTE
Please order moutor after confirming the number of the P.C.Board because the combination of feed motor is different according to the P.C.Board used.

■CD Mechanism Assembly Parts List

⚠	Item	Parts Number	Parts Name	Q'ty	Description	Area
	1	EPB-002PK	MECHA. BASE ASSY	1		
	2	OPTIMA-150S	OPTICAL PICK UP	1		
	3	E407782-001	CD SHAFT	1		
	4	E307746-001	CD RACK	1		
	5	EPB-003A	MECHA GEAR	1		
	6	SDSP2003N	SCREW	4		
	7	E406750-001	PINION GEAR	1		
	8	EPB309173A	TURN TABLE	1		
	9	E406784-001	FEED MOTOR	1	Use the No.11 P.C.Board	
		MDN-4RA3ETA-1	FEED MOTOR	1	Use the No.12 P.C.Board	
	10	E406783-001	SPINDLE MOTOR	1		
	11	EMW10190-001(S)	P.C.BOARD	1		
	12	EMW10190-221(S)	P.C.BOARD	1		
	13	ESB1100-005	LEAF SWITCH	1		
	14	E75832-001	SCREW	1		
	15	EMV5109-006B	CONN. TERMINAL	1		
	16	SDSF2006Z	SCREW	1		

■Mein P.C. Board (VMW1474)

BLOCK NO. 01

⚠	REF.	PARTS NO.	PARTS NAME	REMARKS	SUFFIX
	BP 1	VBP1M3B-004	BP FILTER	BPF	
	C 3	QCSB1HK-6R8Y	C CAPACITOR	6.8PF 10% 50V	
	C 6	QCVB1CN-103Y	C CAPACITOR	.010MF 30% 16V	
	C 7	QCS11HJ-200	C CAPACITOR	20PF 5% 50V	
	C 9	QCS11HJ-120	C CAPACITOR	12PF 5% 50V	
	C 13	QCC11EM-223V	C CAPACITOR	.022MF 20% 25V	
	C 16	QCVB1CN-103Y	C CAPACITOR	.010MF 30% 16V	
	C 21	QCC11EM-473V	C CAPACITOR	.047MF 20% 25V	
	C 22	QFP41HJ-431	PP CAPACITOR	430PF 5% 50V	
	C 23	QCT30CH-120Y	C CAPACITOR	12PF 5% 50V	
	C 31	QCGB1HK-102	C CAPACITOR	1000PF 10% 50V	
	C 32	QCVB1CN-103Y	C CAPACITOR	.010MF 30% 16V	
	C 33	QET41AM-107	E CAPACITOR	100MF 20% 10V	
	C 35	QCVB1CN-103Y	C CAPACITOR	.010MF 30% 16V	
	C 36	QET41HM-475	E CAPACITOR	=R19	
	C 37	QCGB1HK-102	C CAPACITOR	1000PF 10% 50V	
	C 40	QET41HM-105	E CAPACITOR	1.0MF 20% 50V	
	C 41	QET41CM-106	E CAPACITOR	10MF 20% 16V	
	C 42	QCC11EM-473V	C CAPACITOR	.047MF 20% 25V	
	C 43	QCVB1CN-103Y	C CAPACITOR	.010MF 30% 16V	
	C 44	QETC1HM-104Z	E CAPACITOR	.10MF 20% 50V	
	C 45	QET41HM-474	E CAPACITOR	.47MF 20% 50V	
	C 47	QCC11EM-153V	C CAPACITOR	.015MF 20% 25V	
	C 48	QCC11EM-153V	C CAPACITOR	.015MF 20% 25V	
	C 49	QETC1HM-104Z	E CAPACITOR	.10MF 20% 50V	
	C 50	QETC1HM-104Z	E CAPACITOR	.10MF 20% 50V	
	C 51	QCBB1HK-331Y	C CAPACITOR	330PF 10% 50V	
	C 52	QCGB1HK-102	C CAPACITOR	1000PF 10% 50V	
	C 56	QCGB1HK-102	C CAPACITOR	1000PF 10% 50V	
	C 60	QCGB1HK-102	C CAPACITOR	1000PF 10% 50V	
	C 61	QET41AM-107	E CAPACITOR	100MF 20% 10V	
	C 62	QCT30CH-120Y	C CAPACITOR	12PF 5% 50V	
	C 63	QCGB1HK-102	C CAPACITOR	1000PF 10% 50V	
	C 64	QCT30CH-120Y	C CAPACITOR	12PF 5% 50V	
	C 65	QCGB1HK-102	C CAPACITOR	1000PF 10% 50V	
	C 69	QCXB1CM-222Y	C CAPACITOR	2200PF 20% 16V	
	C 70	QETC1HM-225Z	E CAPACITOR	2.2MF 20% 50V	
	C 71	QET41CM-226	E.CAPACITOR	22MF 20% 16V	
	C 77	QCGB1HK-102	C CAPACITOR	1000PF 10% 50V	
	C 79	QCSB1HK-5R6Y	C CAPACITOR	5.6PF 10% 50V	
	C 80	QCBB1HK-151Y	C CAPACITOR	=B136	
	C 101	QFN41HJ-102	M CAPACITOR	1000PF 5% 50V	
	C 102	QFN81HJ-562	M CAPACITOR	5600PF 5% 50V	
	C 103	QET41CM-226	E.CAPACITOR	22MF 20% 16V	
	C 104	QFV41HJ-393ZM	CAPACITOR	.039MF 5% 50V	
	C 107	QET41HM-475	E CAPACITOR	4.7MF 20% 50V	
	C 108	QET41HM-105	E CAPACITOR	1.0MF 20% 50V	
	C 109	QFN41HJ-823	M CAPACITOR	.082MF 5% 50V	
	C 110	QFN41HJ-823	M CAPACITOR	.082MF 5% 50V	
	C 111	QFN41HJ-682	M CAPACITOR	6800PF 5% 50V	
	C 112	QFV41HJ-474	TF CAPACITOR	.47MF 5% 50V	
	C 113	QFN81HJ-223	M CAPACITOR	.022MF 5% 50V	
	C 114	QTE1C06-226Z	E CAPACITOR		
	C 115	QETC1HM-104Z	E CAPACITOR	.10MF 20% 50V	
	C 117	QET41HM-105	E CAPACITOR	1.0MF 20% 50V	

BLOCK NO. 01

⚠	REF.	PARTS NO.	PARTS NAME	REMARKS	SUFFIX
	C 119	QTE1H06-475Z	E CAPACITOR		
	C 120	QET41CM-107	E CAPACITOR	100MF 20% 16V	
	C 121	QCBB1HK-221Y	C CAPACITOR	220PF 10% 50V	
	C 122	QET41CM-107	E CAPACITOR	100MF 20% 16V	
	C 123	QETB1CM-228	E CAPACITOR	2200MF 20% 16V	
	C 124	QFN41HJ-104	M CAPACITOR	.10MF 5% 50V	
	C 125	QTE1C06-226Z	E CAPACITOR	USE ONLY AZM	
	C 130	QCS11HJ-221	C CAPACITOR	220PF 5% 50V	
	C 134	QFN81HJ-562	M CAPACITOR	5600PF 5% 50V	
	C 155	QCBB1HK-181Y	C CAPACITOR	180PF 10% 50V	
	C 201	QFN41HJ-102	M CAPACITOR	1000PF 5% 50V	
	C 202	QFN81HJ-562	M CAPACITOR	5600PF 5% 50V	
	C 203	QET41CM-226	E.CAPACITOR	22MF 20% 16V	
	C 204	QFV41HJ-393ZM	CAPACITOR	.039MF 5% 50V	
	C 207	QET41HM-475	E CAPACITOR	4.7MF 20% 50V	
	C 208	QET41HM-105	E CAPACITOR	1.0MF 20% 50V	
	C 209	QFN41HJ-823	M CAPACITOR	.082MF 5% 50V	
	C 210	QFN41HJ-823	M CAPACITOR	.082MF 5% 50V	
	C 211	QFN41HJ-682	M CAPACITOR	6800PF 5% 50V	
	C 212	QFV41HJ-474	TF CAPACITOR	.47MF 5% 50V	
	C 213	QFN81HJ-223	M CAPACITOR	.022MF 5% 50V	
	C 214	QTE1C06-226Z	E CAPACITOR		
	C 215	QETC1HM-104Z	E CAPACITOR	.10MF 20% 50V	
	C 217	QET41HM-105	E CAPACITOR	1.0MF 20% 50V	
	C 219	QTE1H06-475Z	E CAPACITOR		
	C 220	QET41CM-107	E CAPACITOR	100MF 20% 16V	
	C 221	QCBB1HK-221Y	C CAPACITOR	220PF 10% 50V	
	C 222	QET41CM-107	E CAPACITOR	100MF 20% 16V	
	C 223	QETB1CM-228	E CAPACITOR	2200MF 20% 16V	
	C 224	QFN41HJ-104	M CAPACITOR	.10MF 5% 50V	
	C 225	QTE1C06-226Z	E CAPACITOR	USE ONLY AZM	
	C 230	QCS11HJ-221	C CAPACITOR	220PF 5% 50V	
	C 234	QFN81HJ-562	M CAPACITOR	5600PF 5% 50V	
	C 255	QCBB1HK-181Y	C CAPACITOR	180PF 10% 50V	
	C 303	QCS11HJ-151	C CAPACITOR	150PF 5% 50V	
	C 304	QET41AM-476	E CAPACITOR	47MF 20% 10V	
	C 305	QET41CM-226	E.CAPACITOR	22MF 20% 16V	
	C 306	QET41AM-476	E CAPACITOR	47MF 20% 10V	B,E,EN,J
	C 306	QETC1AM-107ZN	CAPACITOR	100MF 20% 10V	U,US,UX,UY
	C 308	QCS11HJ-181	C CAPACITOR	180PF 5% 50V	
	C 309	QCXB1CM-182Y	C CAPACITOR	1800PF 20% 16V	
	C 310	QFN41HJ-182	M CAPACITOR	1800PF 5% 50V	
	C 312	QFN41HJ-682	M CAPACITOR	6800PF 5% 50V	
	C 313	QET41AM-476	E CAPACITOR	47MF 20% 10V	
	C 315	QFN41HJ-472	M CAPACITOR	4700PF 5% 50V	
⚠	C 318	QETM1EM-688	E CAPACITOR	6800MF 20% 25V	
	C 319	QET41EM-106	E CAPACITOR	10MF 20% 25V	
	C 320	QET41CM-227	E CAPACITOR	220MF 20% 16V	
	C 321	QET41AM-107	E CAPACITOR	100MF 20% 10V	
	C 322	QCGB1HK-102	C CAPACITOR	1000PF 10% 50V	
	C 323	QET41AM-107	E CAPACITOR	100MF 20% 10V	
	C 324	QFN41HJ-102	M CAPACITOR	1000PF 5% 50V	
	C 325	QET41AM-107	E CAPACITOR	100MF 20% 10V	
	C 326	QET41AM-107	E CAPACITOR	100MF 20% 10V	
	C 327	QET41AM-107	E CAPACITOR	100MF 20% 10V	

BLOCK NO. 01

⚠	REF.	PARTS NO.	PARTS NAME	REMARKS	SUFFIX
	C 328	QET41HM-105	E CAPACITOR	1.0MF 20% 50V	
	C 329	QETC1HM-104Z	E CAPACITOR	.10MF 20% 50V	
	C 330	QET41HM-475	E CAPACITOR	4.7MF 20% 50V	
	C 331	QCGB1HK-102	C CAPACITOR	1000PF 10% 50V	
	C 350	QET41HM-475	E CAPACITOR	4.7MF 20% 50V	
	C 352	QETC1AM-107ZN	CAPACITOR	100MF 20% 10V	U,US,UX,UY
	C 353	QET41CM-106	E CAPACITOR	10MF 20% 16V	
	C 354	QET41AM-227	E CAPACITOR	220MF 20% 10V	
	C 356	QETC1CM-226Z	AL E.CAPACITOR	22MF 20% 16V	U,US,UX,UY
	C 357	QET41CM-226	E.CAPACITOR	22MF 20% 16V	
	C 604	QET41AM-107	E CAPACITOR	100MF 20% 10V	
	C 605	QET41EM-106	E CAPACITOR	10MF 20% 25V	
	C 606	QCGB1HK-102	C CAPACITOR	1000PF 10% 50V	
	C 607	QCGB1HK-102	C CAPACITOR	1000PF 10% 50V	
	C 608	QET41HM-105	E CAPACITOR	1.0MF 20% 50V	
	C 609	QCBB1HK-101Y	C CAPACITOR	100PF 10% 50V	
	C 610	QFLC1HJ-273ZM	M CAPACITOR	.027MF 5% 50V	
	C 611	QCXB1CM-222Y	C CAPACITOR	2200PF 20% 16V	
	C 612	QCVB1CN-103Y	C CAPACITOR	.010MF 30% 16V	
	C 613	QCBB1HK-331Y	C CAPACITOR	330PF 10% 50V	
	C 614	QFLC1HJ-104ZM	M CAPACITOR	.10MF 5% 50V	
	C 615	QCFB1HZ-223	C CAPACITOR	.022MF +80:-20% 50V	
	C 616	QCFB1HZ-223	C CAPACITOR	.022MF +80:-20% 50V	
	C 617	QCFB1HZ-223	C CAPACITOR	.022MF +80:-20% 50V	
	C 618	QCXB1CM-222Y	C CAPACITOR	2200PF 20% 16V	
	C 619	QCBB1HK-271Y	C CAPACITOR	270PF 10% 50V	
	C 620	QCS11HJ-470	C CAPACITOR	47PF 5% 50V	
	C 621	QCBB1HK-821Y	C CAPACITOR	820PF 10% 50V	
	C 622	QET41AM-476	E CAPACITOR	47MF 20% 10V	
	C 623	QFLC1HJ-104ZM	M CAPACITOR	.10MF 5% 50V	
	C 628	QCC11EM-473V	C CAPACITOR	.047MF 20% 25V	
	C 629	QET41AM-107	E CAPACITOR	100MF 20% 10V	
	C 631	QET41AM-477	E CAPACITOR	470MF 20% 10V	
	C 632	QET41AM-107	E CAPACITOR	100MF 20% 10V	
	C 651	QCS11HJ-220	C CAPACITOR	22PF 5% 50V	
	C 652	QCS11HJ-220	C CAPACITOR	22PF 5% 50V	
	C 653	QCFB1HZ-223	C CAPACITOR	.022MF +80:-20% 50V	
	C 655	QCC11EM-473V	C CAPACITOR	.047MF 20% 25V	
	C 661	QCBB1HK-471Y	C CAPACITOR	470PF 10% 50V	
	C 662	QCFB1HZ-223	C CAPACITOR	.022MF +80:-20% 50V	
	C 663	QFLC1HJ-223ZM	M CAPACITOR	.022MF 5% 50V	
	C 664	QCFB1HZ-223	C CAPACITOR	.022MF +80:-20% 50V	
	C 665	QFV41HJ-104ZM	TF CAPACITOR	.10MF 5% 50V	
	C 671	QCXB1CM-222Y	C CAPACITOR	2200PF 20% 16V	
	C 672	QCXB1CM-222Y	C CAPACITOR	2200PF 20% 16V	
	C 673	QET41AM-227	E CAPACITOR	220MF 20% 10V	
	C 674	QCFB1HZ-223	C CAPACITOR	.022MF +80:-20% 50V	
	C 675	QCGB1HK-102	C CAPACITOR	AG-DG	
	C 691	QCBB1HK-151Y	C CAPACITOR	DENGEN NOISE	
	C 692	QCBB1HK-151Y	C CAPACITOR	DENGEN NOISE	
	C 693	QCBB1HK-151Y	C CAPACITOR	DENGEN NOISE	
	C 694	QCBB1HK-151Y	C CAPACITOR	DENGEN NOISE	
	C 698	QCGB1HK-102	C CAPACITOR	1000PF 10% 50V	
	C 901	QCF21HP-223A	C.CAPACITOR	.022MF +80:-20%	
	C 902	QCF21HP-223A	C.CAPACITOR	.022MF +80:-20%	

BLOCK NO. 01

⚠	REF.	PARTS NO.	PARTS NAME	REMARKS	SUFFIX
	C 903	QCF21HP-223A	C.CAPACITOR	.022MF +80:-20%	
	C 904	QCF21HP-223A	C.CAPACITOR	.022MF +80:-20%	
	C 905	QCVB1CN-103Y	C CAPACITOR	.010MF 30% 16V	
	C 906	QCVB1CN-103Y	C CAPACITOR	.010MF 30% 16V	
	C 908	QCVB1CN-103Y	C CAPACITOR	.010MF 30% 16V	
	C 909	QET41HM-475	E CAPACITOR	4.7MF 20% 50V	
	C 910	QET41AM-227	E CAPACITOR	220MF 20% 10V	
	C 911	QET41CM-226	E.CAPACITOR	22MF 20% 16V	
	C 912	QCVB1CN-103Y	C CAPACITOR	.010MF 30% 16V	
	C 913	QCVB1CN-103Y	C CAPACITOR	.010MF 30% 16V	
	C 914	QET41AM-227	E CAPACITOR	220MF 20% 10V	
	C 915	QET41AM-107	E CAPACITOR	100MF 20% 10V	
	C 916	QET41AM-476	E CAPACITOR	47MF 20% 10V	
	CF 1	QAX0403-001	C FILTER		
	CF 3	VCF1Z2Z-117Z	C FILTER		
	CF 4	QAX0409-001	CERA LOCK		
	CM 1	QETC1HM-104Z	E CAPACITOR	.10MF 20% 50V	U,US,UX,UY
	CM 2	QCBB1HK-151Y	C CAPACITOR	150PF 10% 50V	U,US,UX,UY
	CM 3	QET41AM-107	E CAPACITOR	100MF 20% 10V	U,US,UX,UY
	CM 4	QCC11EM-103V	C CAPACITOR	.010MF 20% 25V	U,US,UX,UY
	CM 5	QETC1HM-104Z	E CAPACITOR	.10MF 20% 50V	U,US,UX,UY
	CM 6	QETC1HM-104Z	E CAPACITOR	.10MF 20% 50V	U,US,UX,UY
	CN301	VMC0040-004	CONNECTOR	MAIN(TO HEAD)	
	CN303	QGF1212C1-13	FFC CONNE	MAIN(TO CTRL)	
	CN304	QGF1212C1-17	FFC CONNE	MAIN(TO CTRL)	
	CN306	TID-X03P-MI	CONNECTOR	SAME AS VMZ0049	
	CN307	5268-03A	CONNECTOR	SAME AS VMZ0049	
	CN308	QGA2501C4-06	CONNECTOR	MAIN(TO MOTOR)	
	CN309	TXLL-004-M	CONNECTOR	MAIN(TO SPK)	
	CN310	VMC0040-003	CONNECTOR	TEST POINT	
	CN601	QGF1025C1-15	21-41 CONNECTOR	TO RF	
	D 1	SVC203SPA-JV-T	VARI CAP		
	D 2	SVC203SPA-JV-T	VARI CAP		
	D 5	1SS133-T2	DIODE		
	D 6	1SS133-T2	DIODE		
	D 8	KV1555N-T	VARI CAP		
	D 12	1N4001	DIODE		
	D 301	1SS133-T2	DIODE		
⚠	D 303	1SS133-T2	DIODE		
	D 304	1SS133-T2	DIODE		
	D 305	1SS133-T2	DIODE		
	D 307	1SS133-T2	DIODE		
	D 661	1SS133-T2	DIODE		
⚠	D 901	1N5401TM	DIODE		
⚠	D 902	1N5401TM	DIODE		
⚠	D 903	1N5401TM	DIODE		
⚠	D 904	1N5401TM	DIODE		
	D 905	1SS133-T2	DIODE		
	D 906	1SS133-T2	DIODE		
	D 907	1SS133-T2	DIODE		
⚠	D 908	1SS133-T2	DIODE		
	D 909	1SS133-T2	DIODE		
	D 910	1SS133-T2	DIODE		
	D 911	1SS133-T2	DIODE		
	D 912	1N4001	DIODE		

BLOCK NO. 01

⚠	REF.	PARTS NO.	PARTS NAME	REMARKS	SUFFIX
	D 914	1SS133-T2	DIODE		
	D 915	1SS133-T2	DIODE		
	D 917	1SS133-T2	DIODE		
	D 918	1SS133-T2	DIODE		
	D 995	1SS133-T2	DIODE		
	DM 1	1SS133-T2	DIODE		U,US,UX,UY
	DM 2	1SS133-T2	DIODE		U,US,UX,UY
	FC901	EMG7331-003Z	FUSE CLIP	FOR F901	U,US,UX,UY
	FC902	EMG7331-003Z	FUSE CLIP	FOR F902	
	FC903	EMG7331-003Z	FUSE CLIP	FOR F903	J
	FC904	EMG7331-003Z	FUSE CLIP	FOR F901	U,US,UX,UY
	FC905	EMG7331-003Z	FUSE CLIP	FOR F902	
	FC906	EMG7331-003Z	FUSE CLIP	FOR F903	J
	IC 2	TA2008AN	IC		
	IC 3	LC72136N	IC		
	IC301	TA2068N	IC	PB&REC	
⚠	IC302	LA4597K	IC	POWER AMP	
	IC303	M62420SP-700	IC	VOL&TONE	
⚠	IC304	LA4597K	IC	POWER AMP	
	IC304	BA15218N	IC	S.BASS	
	IC601	AN8806SB	IC	RF AMP	
⚠	IC602	BA6897FP	IC	DRIVER	
	IC603	MN35510	IC	1CHIP PROCESSER	
⚠	J 9	QNC0042-001	AC SOCKET		U,US,UX,UY
⚠	J 9	QNC0043-001	AC SOCKET		J
⚠	J 9	QNC0042-001	AC SOCKET		B,E,EN
	J 301	HSJ2000-01-010	HEADPHONE JACK	H.HONES JACK	
	JM 1	HSJ2000-01-010	HEADPHONE JACK		U,US,UX,UY
	K 601	VQZ0048-009	INDUCTOR		
	K 602	VQZ0048-009	INDUCTOR		
	L 1	VQF1B20-019	OSC COIL	FM OSC	
	L 2	VQC1505-002T	RF COIL	FM RF	
	L 3	VQB008M-506	BAR ANTENA	MW RF	
	L 4	QQR0723-001	OSC COIL(MW)	MW OSC	
	L 7	VQP0018-221	INDUCTOR		
	L 12	VO3047-16	INDUCTOR		
	L 601	3A839N	INDUCTOR		
	L 901	VQP0028-330Z	INDUCTOR		
	Q 101	2SC2001/LK/-T	TRANSISTOR	S MUTE	
	Q 103	2SC3330/ST/-T	TRANSISTOR		
	Q 201	2SC2001/LK/-T	TRANSISTOR	S MUTE	
	Q 203	2SC3330/ST/-T	TRANSISTOR		
	Q 302	DTA114ES	TRANSISTOR TAPE		
	Q 303	2SC2458(Y,GR)	TRANSISTOR		
	Q 304	2SA1015/YG/-T	TRANSISTOR		
	Q 305	DTC114ESA-T	D.TRANSISTOR		
	Q 306	8550D	TRANSISTOR		
	Q 308	DTC143ES	TRANSISTOR		
	Q 309	2SC2458(Y,GR)	TRANSISTOR		
	Q 310	DTA143ES	TRANSISTOR		
	Q 311	2SC2001/LK/-T	TRANSISTOR		
	Q 312	2SC2001/LK/-T	TRANSISTOR		
	Q 313	2SC2001/LK/-T	TRANSISTOR		
	Q 315	2SC2458(Y,GR)	TRANSISTOR		
	Q 316	2SA1015/YG/-T	TRANSISTOR		

BLOCK NO. 01

⚠	REF.	PARTS NO.	PARTS NAME	REMARKS	SUFFIX
	Q 317	2SC2458(Y,GR)	TRANSISTOR		
	Q 318	DTA143ES	TRANSISTOR		
	Q 601	2SA952/LK/-T	TRANSISTOR		
	Q 631	2SA952/LK/-T	TRANSISTOR		
⚠	Q 901	2SB772/QP/	T.RRANSISTOR		
⚠	Q 902	2SC2458(Y,GR)	TRANSISTOR	SW8V REG	
⚠	Q 903	8550C	TRANSISTOR		
	Q 904	2SC2458(Y,GR)	TRANSISTOR		
⚠	Q 904	2SC2458(Y,GR)	TRANSISTOR	SW8V REG	
	Q 906	8550D	TRANSISTOR		
	Q 907	2SC2458(Y,GR)	TRANSISTOR		
	Q 908	2SB772/QP/	T.RRANSISTOR		
	Q 909	2SC2458(Y,GR)	TRANSISTOR		
⚠	Q 911	2SC2458(Y,GR)	TRANSISTOR	CDB	
	QM 1	2SC2458(Y,GR)	TRANSISTOR		U,US,UX,UY
	QM 2	2SC2458(Y,GR)	TRANSISTOR		U,US,UX,UY
	R 1	QRD161J-104	C RESISTOR	100K 5% 1/4W	
	R 2	QRD161J-473	C RESISTOR	47K 5% 1/4W	
	R 3	QRD167J-4R7	C RESISTOR	4.7 5% 1/4W	
	R 7	QRD161J-104	C RESISTOR	100K 5% 1/4W	
	R 9	QRD161J-102	C RESISTOR	1.0K 5% 1/4W	
	R 13	QRD161J-104	C RESISTOR	100K 5% 1/4W	
	R 18	QRD161J-102	C RESISTOR	1.0K 5% 1/4W	
	R 20	QRD161J-102	C RESISTOR	1.0K 5% 1/4W	
	R 28	QRD161J-512	C RESISTOR	5.1K 5% 1/4W	
	R 30	QRD161J-104	C RESISTOR	100K 5% 1/4W	
	R 31	QRD161J-223	C RESISTOR	22K 5% 1/4W	
	R 32	QRD161J-223	C RESISTOR	22K 5% 1/4W	
	R 33	QRD161J-101	C RESISTOR	100 5% 1/4W	
	R 34	QRD161J-393	C RESISTOR	39K 5% 1/4W	
	R 35	QRD161J-393	C RESISTOR	39K 5% 1/4W	
	R 37	QRD161J-560	C RESISTOR	56 5% 1/4W	
	R 38	QRE141J-183Y	C RESISTOR	18K 5% 1/4W	
	R 39	QRE141J-183Y	C RESISTOR	18K 5% 1/4W	
	R 44	QRD161J-222	C RESISTOR	2.2K 5% 1/4W	
	R 46	QRE141J-103Y	C RESISTOR	10K 5% 1/4W	
	R 47	QRD161J-221	C RESISTOR	220 5% 1/4W	
	R 48	QRD161J-102	C RESISTOR	1.0K 5% 1/4W	
	R 52	QRD161J-472	C RESISTOR	4.7K 5% 1/4W	
	R 54	QRD161J-222	C RESISTOR	2.2K 5% 1/4W	
	R 55	QRD161J-222	C RESISTOR	2.2K 5% 1/4W	
	R 56	QRD167J-332	C RESISTOR	3.3K 5% 1/4W	
	R 57	QRD161J-102	C RESISTOR	1.0K 5% 1/4W	
	R 59	QRD161J-102	C RESISTOR	1.0K 5% 1/4W	
	R 60	QRD161J-102	C RESISTOR	1.0K 5% 1/4W	
	R 61	QRD161J-102	C RESISTOR	1.0K 5% 1/4W	
	R 64	QRD161J-102	C RESISTOR	1.0K 5% 1/4W	
	R 101	QRD161J-302	C RESISTOR	3.0K 5% 1/4W	
	R 102	QRD161J-102	C RESISTOR	1.0K 5% 1/4W	
	R 103	QRD161J-182	C RESISTOR	1.8K 5% 1/4W	
	R 104	QRD167J-332	C RESISTOR	3.3K 5% 1/4W	
	R 106	QRD161J-823	C RESISTOR	82K 5% 1/4W	
	R 107	QRD161J-820	C RESISTOR	82 5% 1/4W	
	R 108	QRD161J-153	C RESISTOR	15K 5% 1/4W	
	R 109	QRD161J-182	C RESISTOR	1.8K 5% 1/4W	

BLOCK NO. 01

⚠	REF.	PARTS NO.	PARTS NAME	REMARKS	SUFFIX
	R 110	QRD161J-182	C RESISTOR	1.8K 5% 1/4W	
	R 111	QRD167J-562	C RESISTOR	5.6K 5% 1/4W	
	R 112	QRD161J-224	C RESISTOR	220K 5% 1/4W	
	R 113	QRD161J-224	C RESISTOR	220K 5% 1/4W	
	R 114	QRD161J-153	C RESISTOR	15K 5% 1/4W	
	R 116	QRD161J-102	C RESISTOR	1.0K 5% 1/4W	
	R 117	QRE141J-103Y	C RESISTOR	10K 5% 1/4W	
	R 119	QRD161J-104	C RESISTOR	100K 5% 1/4W	
	R 120	QRE141J-183Y	C RESISTOR	18K 5% 1/4W	
⚠	R 121	QRD161J-820	C RESISTOR	82 5% 1/4W	
	R 122	QRD161J-2R2	C RESISTOR	2.2 5% 1/4W	
	R 123	QRD161J-101	C RESISTOR	100 5% 1/4W	
	R 124	QRD161J-222	C RESISTOR	2.2K 5% 1/4W	
	R 134	QRD161J-392	C RESISTOR	3.9K 5% 1/4W	
	R 136	QRD161J-272	C RESISTOR	2.7K 5% 1/4W	
	R 137	QRD167J-682	C RESISTOR	6.8K 5% 1/4W	
	R 201	QRD161J-302	C RESISTOR	3.0K 5% 1/4W	
	R 202	QRD161J-102	C RESISTOR	1.0K 5% 1/4W	
	R 203	QRD161J-182	C RESISTOR	1.8K 5% 1/4W	
	R 204	QRD167J-332	C RESISTOR	3.3K 5% 1/4W	
	R 206	QRD161J-823	C RESISTOR	82K 5% 1/4W	
	R 207	QRD161J-820	C RESISTOR	82 5% 1/4W	
	R 208	QRD161J-153	C RESISTOR	15K 5% 1/4W	
	R 209	QRD161J-182	C RESISTOR	1.8K 5% 1/4W	
	R 210	QRD161J-182	C RESISTOR	1.8K 5% 1/4W	
	R 211	QRD167J-562	C RESISTOR	5.6K 5% 1/4W	
	R 212	QRD161J-224	C RESISTOR	220K 5% 1/4W	
	R 213	QRD161J-224	C RESISTOR	220K 5% 1/4W	
	R 214	QRD161J-153	C RESISTOR	15K 5% 1/4W	
	R 216	QRD161J-102	C RESISTOR	1.0K 5% 1/4W	
	R 217	QRE141J-103Y	C RESISTOR	10K 5% 1/4W	
	R 219	QRD161J-104	C RESISTOR	100K 5% 1/4W	
	R 220	QRE141J-183Y	C RESISTOR	18K 5% 1/4W	
⚠	R 221	QRD161J-820	C RESISTOR	82 5% 1/4W	
	R 222	QRD161J-2R2	C RESISTOR	2.2 5% 1/4W	
	R 223	QRD161J-101	C RESISTOR	100 5% 1/4W	
	R 224	QRD161J-222	C RESISTOR	2.2K 5% 1/4W	
	R 234	QRD161J-392	C RESISTOR	3.9K 5% 1/4W	
	R 236	QRD161J-272	C RESISTOR	2.7K 5% 1/4W	
	R 237	QRD167J-682	C RESISTOR	6.8K 5% 1/4W	
	R 302	QRE141J-103Y	C RESISTOR	10K 5% 1/4W	
	R 303	QRD161J-475	C RESISTOR	4.7M 5% 1/4W	
	R 304	QRE141J-103Y	C RESISTOR	10K 5% 1/4W	
	R 305	QRD161J-182	C RESISTOR	1.8K 5% 1/4W	
	R 306	QRD161J-182	C RESISTOR	1.8K 5% 1/4W	
	R 307	QRD167J-332	C RESISTOR	3.3K 5% 1/4W	
	R 308	QRD167J-562	C RESISTOR	5.6K 5% 1/4W	
	R 309	QRD167J-562	C RESISTOR	5.6K 5% 1/4W	
	R 310	QRD161J-123	C RESISTOR	12K 5% 1/4W	
	R 311	QRD161J-101	C RESISTOR	100 5% 1/4W	
	R 312	QRD161J-431Y	C RESISTOR	430 5% 1/4W	
	R 313	QRD161J-120	C RESISTOR	12 5% 1/4W	
	R 315	QRD161J-101	C RESISTOR	100 5% 1/4W	
	R 316	QRD167J-332	C RESISTOR	3.3K 5% 1/4W	
	R 317	QRE141J-103Y	C RESISTOR	10K 5% 1/4W	

BLOCK NO. 01

⚠	REF.	PARTS NO.	PARTS NAME	REMARKS	SUFFIX
	R 318	QRD161J-101	C RESISTOR	100 5% 1/4W	
	R 319	QRD161J-101	C RESISTOR	100 5% 1/4W	
	R 320	QRD167J-562	C RESISTOR	5.6K 5% 1/4W	
	R 321	QRD167J-562	C RESISTOR	5.6K 5% 1/4W	
	R 322	QRD161J-104	C RESISTOR	100K 5% 1/4W	
	R 323	QRD161J-222	C RESISTOR	2.2K 5% 1/4W	
	R 327	QRD167J-682	C RESISTOR	6.8K 5% 1/4W	
	R 328	QRE141J-103Y	C RESISTOR	10K 5% 1/4W	
	R 329	QRD161J-472	C RESISTOR	4.7K 5% 1/4W	
	R 330	QRD161J-472	C RESISTOR	4.7K 5% 1/4W	
	R 331	QRD161J-101	C RESISTOR	100 5% 1/4W	
	R 332	QRE141J-103Y	C RESISTOR	10K 5% 1/4W	
	R 334	QRD161J-102	C RESISTOR	1K 5% 1/4W	U,US,UX,UY
	R 356	QRE141J-103Y	C RESISTOR	10K 5% 1/4W	
	R 360	QRE141J-103Y	C RESISTOR	10K 5% 1/4W	
	R 361	QRD161J-474	C RESISTOR	470K 5% 1/4W	
	R 371	QRE141J-103Y	C RESISTOR	10K 5% 1/4W	
	R 372	QRD167J-332	C RESISTOR	3.3K 5% 1/4W	
	R 373	QRD161J-101	C RESISTOR	100 5% 1/4W	
	R 374	QRD161J-104	C RESISTOR	100K 5% 1/4W	
	R 601	QRD161J-123	C RESISTOR	12K 5% 1/4W	
	R 603	QRD161J-125	C RESISTOR	1.2M 5% 1/4W	
	R 605	QRD167J-134	C RESISTOR	130K 5% 1/4W	
	R 606	QRD161J-913	C RESISTOR	91K 5% 1/4W	
	R 607	QRD161J-273	C RESISTOR	27K 5% 1/4W	
	R 609	QRD161J-114	C RESISTOR	110K 5% 1/4W	
	R 610	QRD161J-154	C RESISTOR	150K 5% 1/4W	
	R 612	QRE141J-103Y	C RESISTOR	10K 5% 1/4W	
	R 613	QRD167J-121	C RESISTOR	120 5% 1/4W	
	R 614	QRD161J-100	C RESISTOR	10 5% 1/4W	
	R 615	QRD161J-120	C RESISTOR	12 5% 1/4W	
	R 616	QRD161J-910Y	C RESISTOR	91 5% 1/4W	
	R 621	QRD161J-330	C RESISTOR	33 5% 1/4W	
	R 622	QRD161J-330	C RESISTOR	33 5% 1/4W	
	R 623	QRD161J-330	C RESISTOR	33 5% 1/4W	
	R 631	QRD161J-331	C RESISTOR	330 5% 1/4W	
	R 632	QRD161J-101	C RESISTOR	100 5% 1/4W	
	R 633	QRD161J-273	C RESISTOR	27K 5% 1/4W	
	R 641	QRD161J-563	C RESISTOR	56K 5% 1/4W	
	R 642	QRD161J-123	C RESISTOR	12K 5% 1/4W	
	R 643	QRD161J-822	C RESISTOR	8.2K 5% 1/4W	
	R 644	QRD161J-223	C RESISTOR	22K 5% 1/4W	
	R 645	QRD161J-223	C RESISTOR	22K 5% 1/4W	
	R 646	QRD161J-182	C RESISTOR	1.8K 5% 1/4W	
	R 647	QRD167J-562	C RESISTOR	5.6K 5% 1/4W	
	R 651	QRD161J-102	C RESISTOR	1.0K 5% 1/4W	
	R 652	QRD161J-102	C RESISTOR	1.0K 5% 1/4W	
	R 653	QRD161J-102	C RESISTOR	1.0K 5% 1/4W	
	R 654	QRD161J-102	C RESISTOR	1.0K 5% 1/4W	
	R 659	QRD161J-271	C RESISTOR	270 5% 1/4W	
	R 661	QRD161J-104	C RESISTOR	100K 5% 1/4W	
	R 663	QRD161J-124	C RESISTOR	120K 5% 1/4W	
	R 664	QRD161J-471	C RESISTOR	470 5% 1/4W	
	R 666	QRD161J-220	C RESISTOR	22 5% 1/4W	
	R 671	QRD161J-102	C RESISTOR	1.0K 5% 1/4W	

BLOCK NO. 01

⚠	REF.	PARTS NO.	PARTS NAME	REMARKS	SUFFIX
	R 672	QRD161J-102	C RESISTOR	1.0K 5% 1/4W	
	R 901	QRD161J-472	C RESISTOR	4.7K 5% 1/4W	
	R 902	QRD161J-563	C RESISTOR	56K 5% 1/4W	
	R 903	QRD161J-101	C RESISTOR	100 5% 1/4W	
	R 904	QRD161J-821	C RESISTOR	820 5% 1/4W	
	R 906	QRD161J-563	C RESISTOR	56K 5% 1/4W	
	R 907	QRD161J-102	C RESISTOR	1.0K 5% 1/4W	
	R 908	QRD167J-332	C RESISTOR	3.3K 5% 1/4W	
	R 909	QRD161J-102	C RESISTOR	1.0K 5% 1/4W	
	R 910	QRD161J-104	C RESISTOR	100K 5% 1/4W	
	R 911	QRD161J-472	C RESISTOR	4.7K 5% 1/4W	
	R 912	QRD161J-102	C RESISTOR	1.0K 5% 1/4W	
	R 913	QRD167J-562	C RESISTOR	5.6K 5% 1/4W	
	R 914	QRZ0077-4R7X	F RESISTOR	4.7 1/0W	
	R 915	QRD161J-101	C RESISTOR	100 5% 1/4W	
	R 916	QRD161J-821	C RESISTOR	820 5% 1/4W	
	R 917	QRD161J-220	C RESISTOR	22 5% 1/4W	
	R 919	QRD161J-563	C RESISTOR	56K 5% 1/4W	
	R 920	QRD161J-472	C RESISTOR	4.7K 5% 1/4W	
	R 922	QRE141J-103Y	C RESISTOR	10K 5% 1/4W	
	R 999	QRD161J-331	C RESISTOR	330 5% 1/4W	
	RM 1	QRD161J-222	C RESISTOR	2.2K 5% 1/4W	U,US,UX,UY
	RM 2	QRD167J-682	C RESISTOR	6.8K 5% 1/4W	U,US,UX,UY
	RM 4	QRD161J-820	C RESISTOR	82 5% 1/4W	U,US,UX,UY
	RM 5	QRD161J-564	C RESISTOR	560K 5% 1/4W	U,US,UX,UY
	RM 6	QRD167J-332	C RESISTOR	3.3K 5% 1/4W	U,US,UX,UY
	RM 7	QRD161J-681	C RESISTOR	680 5% 1/4W	U,US,UX,UY
	RM 8	QRD161J-472	C RESISTOR	4.7K 5% 1/4W	U,US,UX,UY
	RM 9	QRD161J-563	C RESISTOR	56K 5% 1/4W	U,US,UX,UY
	RM 10	QRD161J-202	C RESISTOR	2.0K 5% 1/4W	U,US,UX,UY
	S 303	SK-23E01-G9	SLIDE SWITCH	BEAT CUT SW(TKR	
	S 901	QSW0555-001	VOLT. SELECTOR		U,US,UX,UY
	T 2	VQT7A21-112	IFT		
	T 301	OH-812320	BIAS OSC COIL		
	TC 2	QAT3114-200Z	T CAPACITOR	MW RF	
	TP 2	VMZ0015-002	PIN SOCKET	GND	
	WR001	35400-402-01-05	6PINS HOUSING	TO CD MECHA	
	WR002	35400-396-01-05	3PINS HOUSING	TO BATT	
	WR003	35400-403-01-05	2PINS HOUDING	CTL TO CD DOOR	
	WR004	35100-006-26-99	UL VINYL WIRE	MAIN PCB 60MM A	
	WR005	35400-399-02-05	3PINS HOUSING	MAIN TO POWER	
	WR006	35100-014-26-99	UL VINYL WIRE	LAMP WIRE	
	X 1	QAX0402-001	CRYSTAL		
	X 651	CSA16.93MXZ040T	CERA LOCK	16.9344MHZ	
	ZD302	UZ4.3BSB-T2	ZENER DIODE		
	ZD903	MTZ6.2JB	ZENER DIODE		
	ZD904	MTZ5.6JB	ZENER DIODE		
	ZD905	MTZJ7.5C-T2	ZENER DIODE		

■System CPU Board for RC-QN1 (VMW2422)

BLOCK NO. 02

⚠	REF	PARTS NO.	PARTS NAME	REMARKS	SUFFIX
	C 702	NCS21HJ-240	C.CAPACITOR	24PF 5% 50V	
	C 703	NCS21HJ-360AY	C CAPACITOR	36PF 5% 50V	
	C 704	NCS21HJ-360AY	C CAPACITOR	36PF 5% 50V	
	C 705	NCS21HJ-240	C CAPACITOR	24PF 5% 50V	
	C 706	NCB21HK-102AY	C CAPACITOR	1000PF 10% 50V	
	C 707	NCF21EZ-104AYU	C CAPACITOR	.10MF +80:-20%	
	C 708	QET41AM-227	E CAPACITOR	220MF 20% 10V	
	C 709	QETB0JM-228	E CAPACITOR	2200MF 20% 6.3V	
	C 710	NCB21HK-103AY	C CAPACITOR	.010MF 10% 25V	
	C 711	QER41CM-106	E CAPACITOR	10MF 20% 16V	
	C 712	QER41HM-225	E CAPACITOR	2.2MF 20% 50V	
	C 714	NCS21HJ-151X	C CAPACITOR	150PF 5% 50V	
	C 716	NCS21HJ-151X	C CAPACITOR	150PF 5% 50V	
	C 717	NCS21HJ-220AY	C CAPACITOR	22PF 5% 50V	
	C 718	NCS21HJ-270AY	C CAPACITOR	27PF 5% 50V	
	C 719	NCB21HK-102AY	C CAPACITOR	1000PF 10% 50V	
	C 720	NCB21HK-102AY	C CAPACITOR	1000PF 10% 50V	
	C 721	NCB21HK-103AY	C CAPACITOR	.010MF 10% 25V	
	C 722	NCS21HJ-101AY	C CAPACITOR	100PF 5% 50V	
	C 723	NCS21HJ-101AY	C CAPACITOR	100PF 5% 50V	
	C 724	NCS21HJ-101AY	C CAPACITOR	100PF 5% 50V	
	C 725	NCS21HJ-101AY	C CAPACITOR	100PF 5% 50V	
	C 727	QET41AM-476	E CAPACITOR	REMOCON	
	C 732	NCF21EZ-104AYU	C CAPACITOR	.10MF +80:-20%	
	C 738	NCS21HJ-151X	C CAPACITOR	150PF 5% 50V	
	C 801	NCB21HK-103AY	C CAPACITOR	.010MF 10% 25V	
	C 802	NCB21HK-103AY	C CAPACITOR	.010MF 10% 25V	
	CN701	QGF1212F1-17	FFC/FPC CONNE	CTL(TO MAIN)	
	CN703	QGF1212F1-13	FFC/FPC CONNE	CTL(TO MAIN)	
	CN704	TIP-X02P-MI	CONNECTOR	CTL(TO DOOR SW)	
	D 702	1SS133-T2	DIODE		
	D 703	UZ5.1BSC-T2	ZENER DIODE		
	D 704	1SS133-T2	DIODE		
	D 706	1SS133-T2	DIODE		
	D 707	1SS133-T2	DIODE		
	D 708	1SS133-T2	DIODE		
	D 851	LT0311G-41	LED GREEN STAND	POWER LED	
	D 852	LT0321-41	ON LED RTP	STANBY LED	
	DI701	QLD0045-001	LCD	LCD DISPLAY	
	IC701	MN171603JACA	IC	KEY HAI HENKOU	
	IC703	GP1U281X	IR DETECT UNIT	REMOCON	
	JS801	QSW0706-001	ROTARY ENCODER		
	K 701	VQZ0048-009	INDUCTOR		
	K 702	VQZ0048-009	INDUCTOR		
	K 703	VQZ0048-009	INDUCTOR		
	L 701	3A839N	INDUCTOR		
	L 702	3A839N	INDUCTOR		
	PL701	QLL0051-001	LAMP	LIGHT GREEN	
	Q 701	2SC2714/O/-X	TRANSISTOR		
	Q 702	2SC2714/O/-X	TRANSISTOR		
	Q 703	2SC2412K/R/-X	TRANSISTOR		
	Q 704	DTC144EKA-X	TRANSISTOR		
	Q 705	2SA1037AKT146	CHIP TRANSISTOR		
	Q 706	DTC143TKA-X	DIGI TRANSISTOR		
	Q 709	2SC2412K/R/-X	TRANSISTOR		

BLOCK NO. 02

⚠	REF.	PARTS NO.	PARTS NAME	REMARKS	SUFFIX
	Q 851	2SA1037AKT146	CHIP TRANSISTOR	POWER	
	Q 852	2SC2412K/R/-X	TRANSISTOR		
	R 701	NRSA02J-102NY	MG RESISTOR	1.0K 5% 1/10W	
	R 702	NRSA02J-822NY	MG RESISTOR	8.2K 5% 1/10W	
	R 703	NRSA02J-822NY	MG RESISTOR	8.2K 5% 1/10W	
	R 704	NRSA02J-102NY	MG RESISTOR	1.0K 5% 1/10W	
	R 706	NRSA02J-103NY	MG RESISTOR	10K 5% 1/10W	
	R 707	NRSA02J-103NY	MG RESISTOR	10K 5% 1/10W	
	R 708	NRSA02J-103NY	MG RESISTOR	10K 5% 1/10W	
	R 709	NRSA02J-223NY	MG RESISTOR	22K 5% 1/10W	
	R 710	NRSA02J-104X	MG RESISTOR	100K 5% 1/10W	
	R 711	NRSA02J-223NY	MG RESISTOR	22K 5% 1/10W	
	R 712	NRSA02J-103NY	MG RESISTOR	10K 5% 1/10W	
	R 713	NRSA02J-103NY	MG RESISTOR	10K 5% 1/10W	
	R 714	NRSA02J-393NY	MG RESISTOR	39K 5% 1/10W	
	R 715	NRSA02J-333NY	MG RESISTOR	33K 5% 1/10W	
	R 716	NRSA02J-473NY	MG RESISTOR	47K 5% 1/10W	
	R 717	NRSA02J-333NY	MG RESISTOR	33K 5% 1/10W	
	R 718	NRSA02J-103NY	MG RESISTOR	10K 5% 1/10W	
	R 719	NRSA02J-104X	MG RESISTOR	100K 5% 1/10W	
	R 720	NRSA02J-104X	MG RESISTOR	100K 5% 1/10W	
	R 721	NRSA02J-222NY	MG RESISTOR	2.2K 5% 1/10W	
	R 722	NRSA02J-104X	MG RESISTOR	100K 5% 1/10W	
	R 723	NRSA02J-103NY	MG RESISTOR	10K 5% 1/10W	
	R 724	NRSA02J-222NY	MG RESISTOR	10K NG	
	R 725	NRSA02J-222NY	MG RESISTOR	10K NG	
	R 726	NRSA02J-222NY	MG RESISTOR	10K NG	
	R 727	NRSA02J-222NY	MG RESISTOR	10K NG	
	R 728	NRSA02J-103NY	MG RESISTOR	10K 5% 1/10W	
	R 729	NRSA02J-473NY	MG RESISTOR	47K 5% 1/10W	
	R 730	NRSA02J-103NY	MG RESISTOR	10K 5% 1/10W	
	R 731	NRSA02J-102NY	MG RESISTOR	1.0K 5% 1/10W	
	R 732	NRSA02J-104X	MG RESISTOR	100K 5% 1/10W	
	R 733	NRSA02J-104X	MG RESISTOR	100K 5% 1/10W	
	R 734	NRSA02J-104X	MG RESISTOR	100K 5% 1/10W	
	R 735	NRSA02J-103NY	MG RESISTOR	10K 5% 1/10W	
	R 736	NRSA02J-103NY	MG RESISTOR	10K 5% 1/10W	
	R 737	NRSA02J-103NY	MG RESISTOR	10K 5% 1/10W	
	R 739	NRSA02J-223NY	MG RESISTOR	22K 5% 1/10W	
	R 740	NRSA02J-103NY	MG RESISTOR	10K 5% 1/10W	
	R 742	NRSA02J-222NY	MG RESISTOR	2.2K 5% 1/10W	
	R 746	NRSA02J-223NY	MG RESISTOR	22K 5% 1/10W	
	R 748	NRSA02J-223NY	MG RESISTOR	REMOCON	
	R 749	NRSA02J-473NY	MG RESISTOR	47K 5% 1/10W	
	R 750	NRSA02J-103NY	MG RESISTOR	10K 5% 1/10W	
	R 751	NRSA02J-103NY	MG RESISTOR	10K 5% 1/10W	
	R 752	NRSA02J-103NY	MG RESISTOR	10K 5% 1/10W	
	R 753	NRSA02J-222NY	MG RESISTOR	2.2K 5% 1/10W	
	R 754	NRSA02J-103NY	MG RESISTOR	10K 5% 1/10W	
	R 755	NRSA02J-103NY	MG RESISTOR	REST	
	R 756	NRSA02J-223NY	MG RESISTOR	22K 5% 1/10W	
	R 758	NRSA02J-222NY	MG RESISTOR	2.2K 5% 1/10W	
	R 759	NRSA02J-102NY	MG RESISTOR	1.0K 5% 1/10W	
	R 760	NRSA02J-102NY	MG RESISTOR	1.0K 5% 1/10W	
	R 761	NRSA02J-222NY	MG RESISTOR	2.2K 5% 1/10W	

BLOCK NO. 02

⚠	REF.	PARTS NO.	PARTS NAME	REMARKS	SUFFIX
	R 762	NRSA02J-222NY	MG RESISTOR	2.2K 5% 1/10W	
	R 763	NRSA02J-222NY	MG RESISTOR	2.2K 5% 1/10W	
	R 767	NRSA02J-472NY	MG RESISTOR	4.7K 5% 1/10W	
	R 768	NRSA02J-103NY	MG RESISTOR	10K 5% 1/10W	
	R 769	NRSA02J-103NY	MG RESISTOR	10K 5% 1/10W	
	R 770	NRSA02J-222NY	MG RESISTOR	2.2K 5% 1/10W	
	R 772	NRSA02J-102NY	MG RESISTOR	1.0K 5% 1/10W	
	R 773	NRSA02J-103NY	MG RESISTOR	10K 5% 1/10W	
	R 774	NRSA02J-102NY	MG RESISTOR	1.0K 5% 1/10W	
	R 775	NRSA02J-102NY	MG RESISTOR	1.0K 5% 1/10W	
	R 776	NRSA02J-102NY	MG RESISTOR	1.0K 5% 1/10W	
	R 777	NRSA02J-102NY	MG RESISTOR	1.0K 5% 1/10W	
	R 778	NRSA02J-102NY	MG RESISTOR	1.0K 5% 1/10W	
	R 779	NRSA02J-102NY	MG RESISTOR	1.0K 5% 1/10W	
	R 785	NRSA02J-222NY	MG RESISTOR	2.2K 5% 1/10W	UY,J
	R 785	NRSA02J-223NY	MG RESISTOR	22K 5% 1/10W	B,E,EN
	R 785	NRSA02J-822NY	MG RESISTOR	8.2K 5% 1/10W	U,US,UX
	R 789	NRSA02J-103NY	MG RESISTOR	10K 5% 1/10W	U,US,UX,UY
	R 789	NRSA02J-103NY	MG RESISTOR	10K 5% 1/10W	B,E,EN
	R 790	NRSA02J-472NY	MG RESISTOR	4.7K 5% 1/10W	
	R 796	NRSA02J-104X	MG RESISTOR	FOR Q705	
	R 797	NRSA02J-472NY	MG RESISTOR	4.7K 5% 1/10W	
	R 851	NRSA02J-152X	MG RESISTOR	1.5K 5% 1/10W	
	R 852	NRSA02J-182NY	MG RESISTOR	1.8K 5% 1/10W	
	R 853	NRSA02J-272NY	MG RESISTOR	2.7K 5% 1/10W	
	R 854	NRSA02J-392NY	MG RESISTOR	3.9K 5% 1/10W	
	R 855	NRSA02J-682X	MG RESISTOR	6.8K 5% 1/10W	
	R 856	NRSA02J-123NY	MG RESISTOR	12K 5% 1/10W	
	R 857	NRSA02J-393NY	MG RESISTOR	39K 5% 1/10W	
	R 858	NRSA02J-562NY	MG RESISTOR	5.6K 5% 1/10W	
	R 859	NRSA02J-183NY	MG RESISTOR	18K 5% 1/10W	
	R 860	NRSA02J-331NY	MG RESISTOR	330 5% 1/10W	
	R 861	NRSA02J-681NY	MG RESISTOR	680 5% 1/10W	
	R 862	NRSA02J-103NY	MG RESISTOR	10K 5% 1/10W	
	R 863	NRSA02J-103NY	MG RESISTOR	10K 5% 1/10W	
	R 864	NRSA02J-562NY	MG RESISTOR	5.6K 5% 1/10W	
	R 865	NRSA02J-222NY	MG RESISTOR	2.2K 5% 1/10W	
	S 851	QSW0707-001Z	TACT SWITCH	SOUND	
	S 852	QSW0707-001Z	TACT SWITCH	BASS	
	S 853	QSW0707-001Z	TACT SWITCH	DOWN	
	S 854	QSW0707-001Z	TACT SWITCH	TUNER	
	S 855	QSW0707-001Z	TACT SWITCH	STOP	
	S 856	QSW0707-001Z	TACT SWITCH	CD	
	S 857	QSW0707-001Z	TACT SWITCH	UP	
	S 858	QSW0707-001Z	TACT SWITCH	CLOCK/TIMER	
	S 865	QSW0707-001Z	TACT SWITCH	POWER	
	S 866	PS-22F23-A3.3NS	PUSH SWITCH	CD OPEN/CLOSE	
	X 701	QAX0410-001Z	CERA LOCK		
	X 702	QAX0401-001	CRYSTAL		

-MEMO-

Packing Materials and Accessories List

Block No. M 4 M M
Block No. M 5 M M

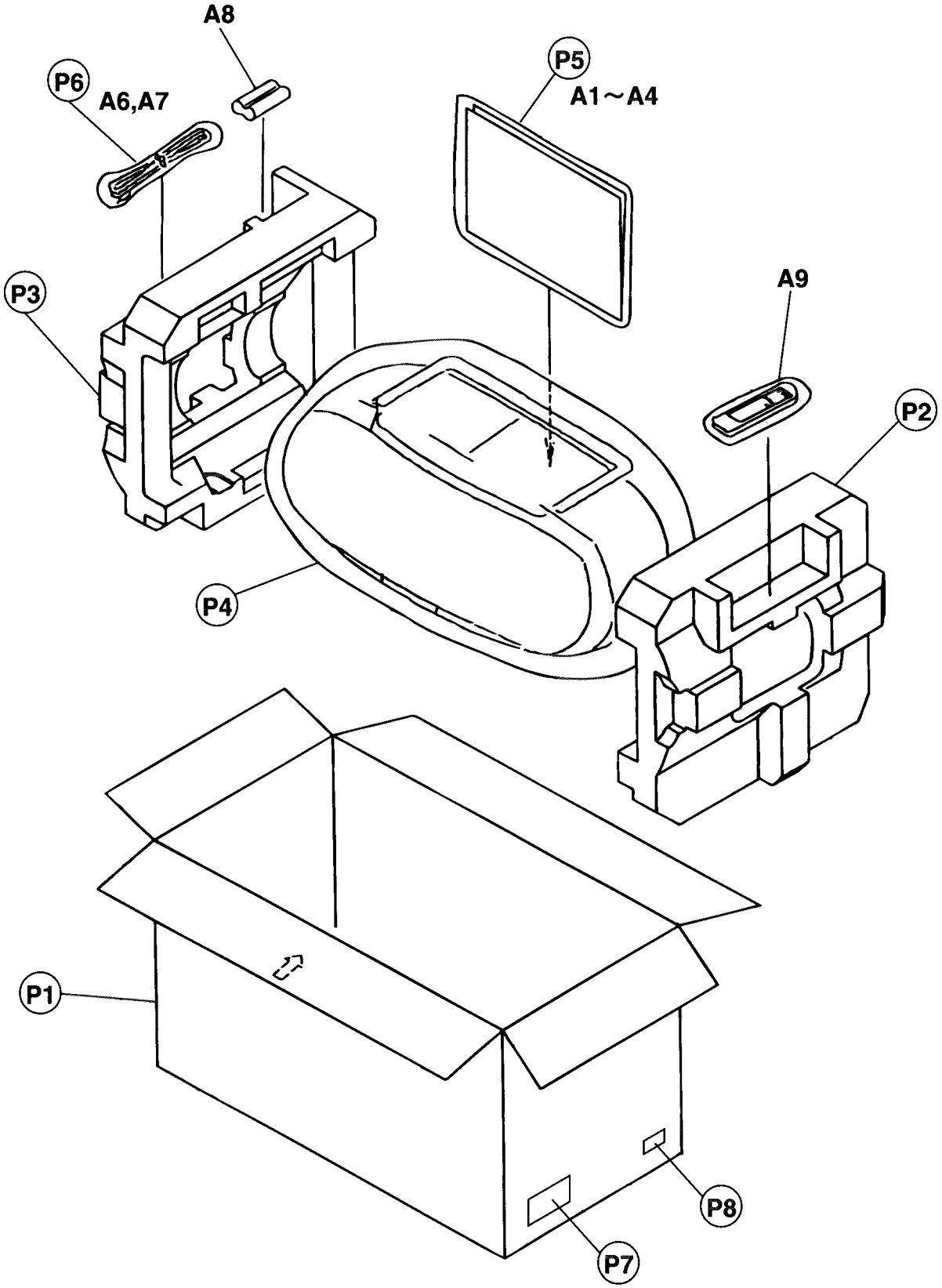

BLOCK NO. M4MM

⚠	REF.	PARTS NO.	PARTS NAME	REMARKS	QTY	SUFFIX	CLR
	P 1	LV30187-003A	CARTON		1	J	
		LV30187-004A	CARTON		1	U,US,UX,UY	
		LV30187-004A	CARTON		1	B,E,EN	
	P 2	LV10052-001A	CUSHION(L)		1		
	P 3	LV10053-001A	CUSHION(R)		1		
	P 4	VPE3026-009	POLY BAG	SET	1		
	P 5	VPE3005-001	POLY BAG	INSTRUCTIONS	1		
	P 6	QPA01202505	POLY BAG	POWER CORD	1	E,EN,J	
		QPA01202505	POLY BAG	POWER CORD	1	U,US,UX,UY	
		QPGA015-03503	POLY BAG	POWER CORD	1	B	
	P 7	----------	CARTON LABEL		1		
	P 8	----------	UY LABEL		1	UY	

BLOCK NO. M5MM

⚠	REF.	PARTS NO.	PARTS NAME	REMARKS	QTY	SUFFIX	CLR
	A 1	LVT0050-002A	INSTRUCTIONS		1	B	
		LVT0050-003A	INSTRUCTIONS		1	E	
		LVT0050-005A	INSTRUCTIONS		1	EN	
		LVT0050-007A	INSTRUCTIONS		1	U,US,UY	
		LVT0050-009A	INSTRUCTIONS		1	UX	
		LVT0050-001A	INSTRUCTIONS		1	J	
	A 2	E43486-340B	SAFETY INST		1	B	
		BT-20044G	SAFTY SHEET		1	J	
	A 3	BT-51009-3	WARRANTY CARD		1	J	
		BT-52001-1	WARRANTY CARD		1	J	
		BT-54008-1	WARRANTY CARD		1	B,E,EN	
	A 4	BT-20071B	SERVICE NETWORK		1	J	
		BT-20137	SERVICE NETWORK		1	J	
⚠	A 6	QMP7350-150	POWER CORD		1	UX	
⚠		QMP39F0-183	POWER CORD		1	E,EN,U,US	
⚠		QMP5520-183BS	POWER CORD		1	B	
⚠		QMPS050-183-JC	POWER CORD		1	UY	
⚠		QMP1F00-183	POWER CORD		1	J	
⚠	A 7	ENZ2202-001	SIEMENS PLUG		1	U,US	
⚠		ENZ2203-001	SIEMENS PLUG		1	UX	
	A 8	UM-3(DV)-2PSA	BATTERY		1	B,E,EN	
		UM-3(DV)-2PSA	BATTERY		1	U,US,UX,UY	
	A 9	RM-RXQN3E	REMOCON UNIT		1	B,E,EN	
		RM-RXQN3	REMOCON UNIT		1	J	
		RM-RXQN3E	REMOCON UNIT		1	U,US,UX,UY	

-MEMO-

PARTS LIST

[RC-QN3BK]

* All printed circuit boards and its assemblies are not available as service parts.

Area Suffix

B ..... U.K.
E ..... Continental Europe
EN ..... Northern Europe
J ..... The U.S.A.
US ..... Singapore
UX ..... Saudi Arabia
UY ..... Argentina
U ..... Other Areas

- Contents -

General Exploded View and Parts List 4-2
Exploded View of Cassette Mechanism and Parts List 4-4
Exploded View of CD Mechanism and Parts List 4-7
Electrical Parts List 4-8
Packing Materials and Accessories List 4-14

General Exploded View and Parts List

Block No. M 1 M M

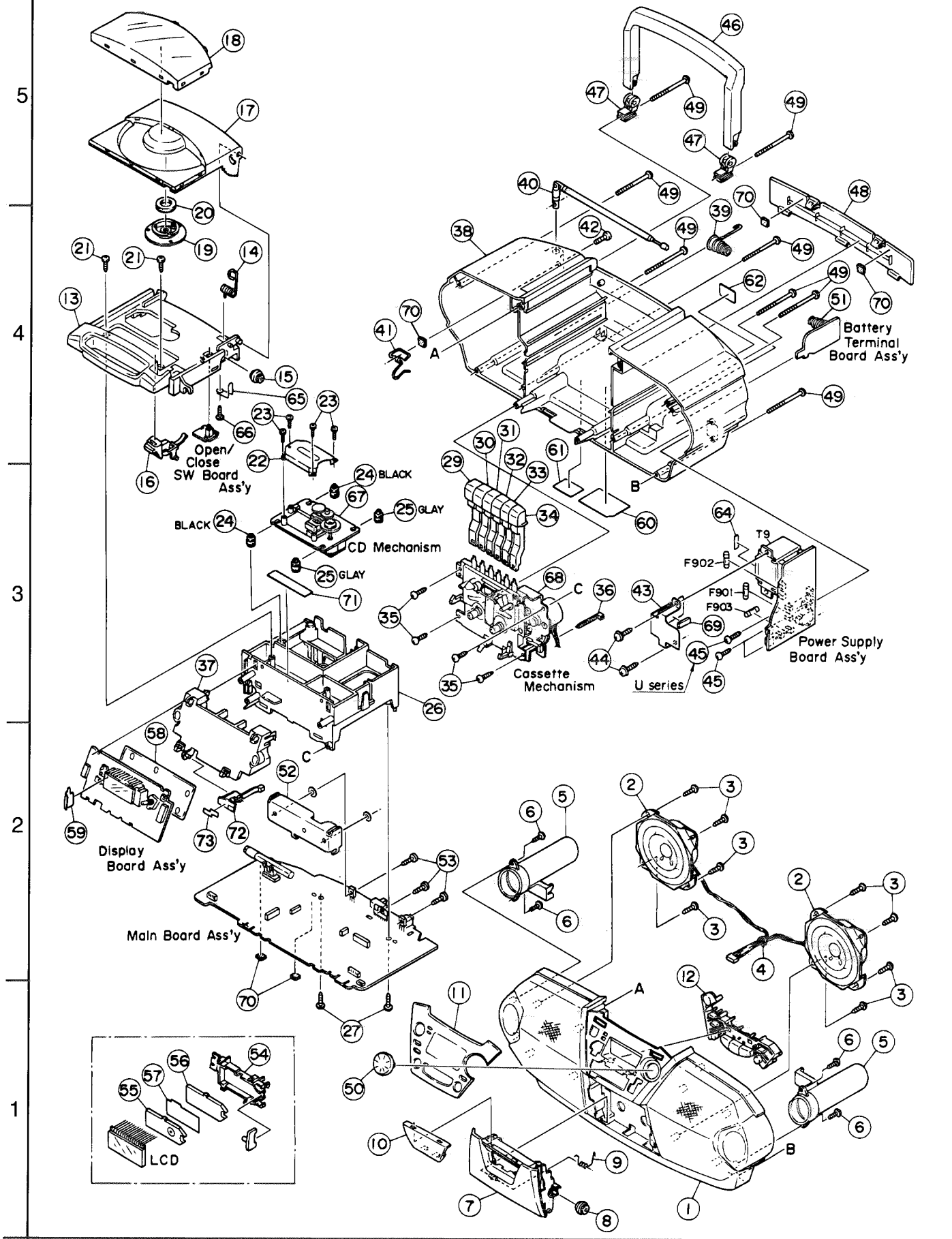

BLOCK NO. M1MM

⚠	REF.	PARTS NO.	PARTS NAME	REMARKS	QTY	SUFFIX	CLR
	1	LV10085-001A	FRONT CABI ASSY		1	J	
		LV10085-002A	FRONT CABI ASSY		1	B,E,EN	
		LV10085-002A	FRONT CABI ASSY		1	U,US,UX	
		LV10085-002A	FRONT CABI ASSY		1	UY,UT	
	2	LE10010-006A	SPEAKER		2		
	3	SBSF3010Z	SCREW		8		
	4	E33754-001	TIE BAND		1		
	5	LV30169-001A	DUCT		2		
	6	SBSF3010Z	SCREW		4		
	7	LV10046-001A	CASSETTE DOOR		1		
	8	VYH8007-001	DAMP GEAR		1		
	9	LV40210-001A	DOOR SPRING		1		
	10	LV30171-001A	DOOR LENS		1		
	11	LV20078-002A	FRONT LENS		1	U,US,UX	
		LV20078-002A	FRONT LENS		1	UY,UT	
		LV20078-001A	FRONT LENS		1	J	
		LV20078-002A	FRONT LENS		1	B,E,EN	
	12	LV10065-001A	PUSH BUTTON		1		
	13	LV10048-001A	CD CASE		1	J	
		LV10048-002A	CD CASE		1	B,E,EN	
		LV10048-002A	CD CASE		1	U,US,UT	
		LV10048-002A	CD CASE		1	UY,UX	
	14	LV40211-003A	DOOR SPRING		1		
	15	VYH8007-001	DAMP GEAR		1		
	16	LV30174-001A	OPEN BUTTON		1		
	17	LV10050-001A	CD DOOR		1		
	18	LV20081-001A	CD DOOR LENS		1		
	19	LV30175-001A	CLAMPER		1		
	20	VYH7313-005	MAGNET		1		
	21	SDSF3012M	SCREW	CD CASE	2		
	22	202-300002-00	PICK-UP COVER		1		
	23	SDSF2006M	SCREW		4		
	24	E75609-001	INSULATOR	BLACK	2		
	25	E75609-002	INSULATOR	GRAY	2		
	26	LV10047-001A	CD HOLDER		1		
	27	SBSF3010Z	SCREW	PCB	2		
	29	LV20104-001A	MECHA.BUTTON(A)	PAUSE	1		
	30	LV20104-002A	MECHA.BUTTON(B)	STOP	1		
	31	LV20104-003A	MECHA.BUTTON(C)	FF	1		
	32	LV20104-004A	MECHA.BUTTON(D)	REW	1		
	33	LV20104-005A	MECHA.BUTTON(E)	PLAY	1		
	34	LV20104-006A	MECHA.BUTTON(F)	REC	1		
	35	SBSF3010Z	SCREW		4		
	36	E33754-001	TIE BAND		1		
	37	LV20080-001A	PCB BRACKET		1		
	38	LV10051-002A	REAR CABINET		1	B,E,EN	
		LV10051-001A	REAR CABINET		1	J	
		LV10051-003A	REAR CABINET		1	U,US,UX	
		LV10051-003A	REAR CABINET		1	UY,UT	
	39	VYH5657-006	BATTERY SPRING		1		
	40	215-021704-00	ROD ANTENNA		1		
	41	LV40212-001A	CONTACT SPRING		1		
	42	SDSP3008N	SCREW	ANT	1		
	43	LV30570-001A	SHIELD		1		

BLOCK NO. M1MM

⚠	REF.	PARTS NO.	PARTS NAME	REMARKS	QTY	SUFFIX	CLR
	44	GBSF3014Z	T.SCREW	TRANS	2		
	45	SBSF3010Z	SCREW	AC INLET	2	B,E,EN,J	
		SBSF3010Z	SCREW	AC INLET	3	UY,UT	
		SBSF3010Z	SCREW	AC INLET	3	U,US,UX	
	46	LV20083-001A	HANDLE		1		
	47	VYH8008-001	HANDLE SUPPORT		2		
	48	LV20082-001A	BATT.COVER		1		
	49	SBSF3045Z	SCREW	R.CABI	8		
	50	LV30173-001A	JOG KNOB		1		
	51	VYH5483-001	BATTERY SPRING	BATT.PCB	1		
⚠	52	LV30176-001A	HEAT SINK		1		
	53	SDSF3008Z	SCREW	IC	3		
	54	LV30178-001A	LCD HOLDER		1		
	55	LV40200-001A	LCD LENS		1		
	56	LV40379-001A	LCD LENS 2		1		
	57	LV40213-001A	LCD SHEET		1		
	58	LV40449-001A	SHIELD		1		
	59	LV40497-001A	BLIND		1		
	60	LV30378-001A	NAME PLATE		1	J	
		LV30378-002A	NAME PLATE		1	B,E,EN	
		LV30378-005A	NAME PLATE		1	UX	
		LV30378-007A	NAME PLATE		1	UT	
		LV30378-004A	NAME PLATE		1	U,US,UY	
	61	LV30093-038A	UT LABEL		1	UT	
		77200-154-01-01	HHS LABEL		1	J	
	62	E70891-001	CLASS 1 LABEL	77200-161-01-01	1	B,E,EN,US	
		E70891-001	CLASS 1 LABEL	77200-161-01-01	1	UY,UT	
		VND5008-001	FCC LABEL		1	J	
	64	VND4003-057	FUSE LABEL		1	J	
	65	202-003509-00	SPRING		1		
	66	SBSF3010Z	SCREW		1		
	67	----------	C.D MECHA ASS'Y		1		
	68	----------	C.MECHA ASSY		1		
	69	VYSH102-089	SPACER		1		
	70	VYSA1R4-058	SPACER		5		
	71	E406709-001	LASER CAUTION	77200-162-01-01	1	B,E,EN,US	
		E406709-001	LASER CAUTION	77200-162-01-01	1	UY,UT	
	72	LV40201-001A	DER.INDICATOR		1		
	73	LV40378-001A	INDICATOR		1		
⚠	F 901	QMF51E2-R40SBS	FUSE		1	UY,UT	
⚠		QMF51E2-R40SBS	FUSE		1	U,US,UX	
⚠	F 902	QMF51E2-3R15J1	FUSE		1	B,E,EN	
⚠		QMF51E2-3R15J1	FUSE		1	UY,UT	
⚠		QMF51E2-3R15J1	FUSE		1	U,US,UX	
⚠		QMF51N2-3R0-J1	FUSE		1	J	
⚠	F 903	QMF51N2-3R0-J1	FUSE		1	J	
⚠	T 9	QQT0209-003	POWER TRANS		1	UY,UT	
⚠		QQT0209-001	POWER TRANS		1	J	
⚠		QQT0209-003	POWER TRANS		1	U,US,UX	
⚠		QQT0209-002	POWER TRANS		1	B,E,EN	

Cassette Mechanism Ass'y and Parts List

Block No. M 2 M M

TN-51RV-236

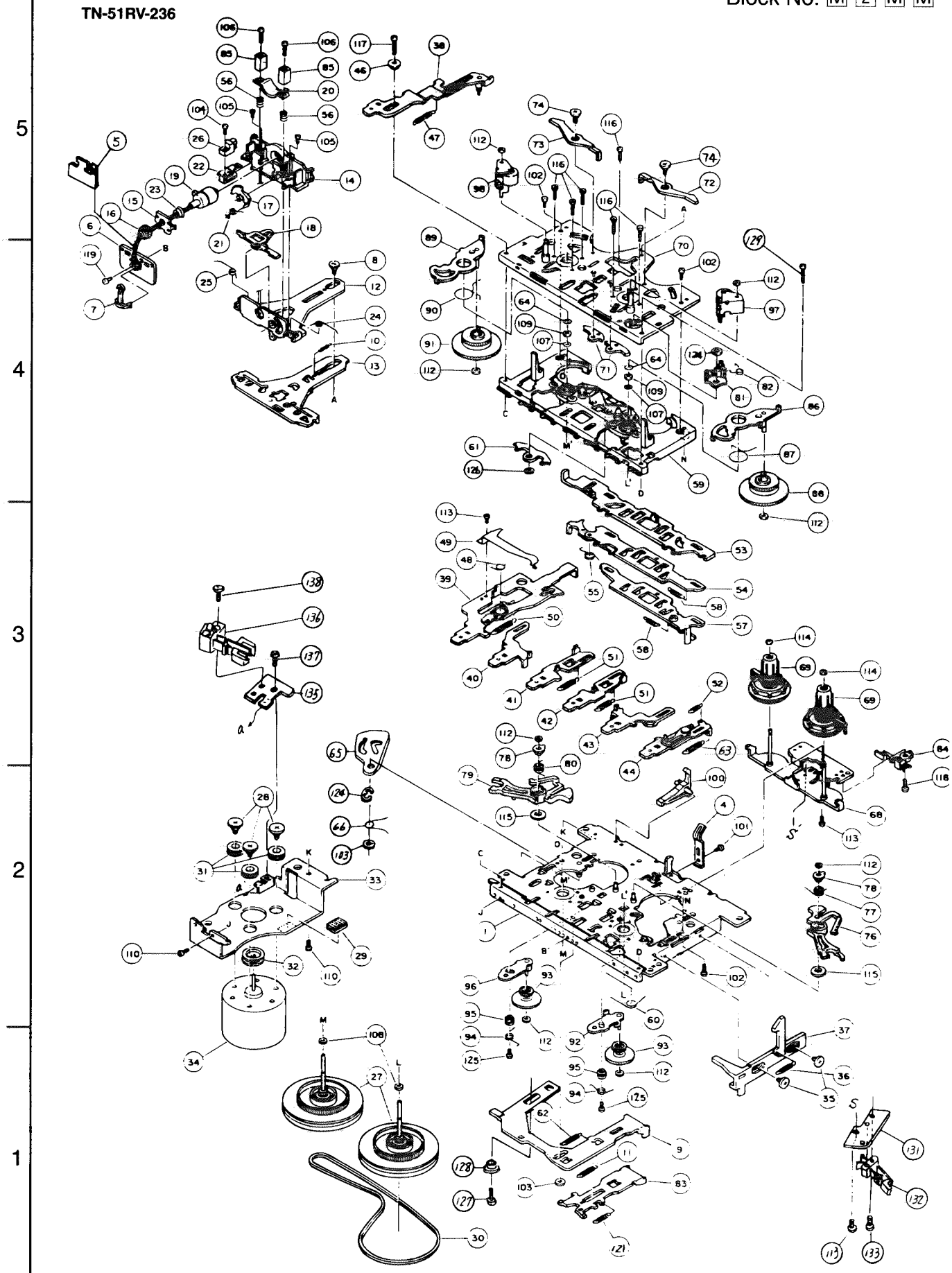

BLOCK NO. M2MM

⚠	REF.	PARTS NO.	PARTS NAME	REMARKS	QTY	SUFFIX	CLR
	1	185101309T	CHASSIS ASS'Y		1		
	4	18291001T	PACK SPRING		1		
	5	18510441T	H SHIELD PLATE		1		
	6	18510106T	H.W.TERM.BOARD		1		
	7	18650965T	CORD CLAMPER		1		
	8	18510455T	SCREW		1		
	9	18510456T	RELEASE PLATE V		1		
	10	18510409T	R.C.PLATE SP.		1		
	11	18510411T	R.C.SPRING(M)		1		
	12	18510414T	HEAD PANEL		1		
	13	18510415T	R.C.PLATE		1		
	14	18510439T	HEAD MOUNT		1		
	15	18510418T	HOLDER		1		
	16	18510444T	PINION GEAR		1		
	17	18510420T	H TUR.OVER GEAR		1		
	18	18510421T	HEAD SLIDE PLAT		1		
	19	62050601T	RP HEAD	RC-889	1		
	20	18510424T	HEAD SP PLATE		1		
	21	18510425T	SPRING		1		
	22	18510426T	E HEAD HOLDER		1		
	23	18510427T	H HOLDER SPRING		1		
	24	18510449T	P.ROLL.SP.(F)		1		
	25	18510429T	P.ROLLER SP(R)		1		
	26	62051012T	E HEAD	EM-1636	1		
	27	185112505ZT	FW.ASS'Y		2		
	28	18511418T	COLLAR SCREW		3		
	29	182112109T	MAT		1		
	30	18511417T	MAIN BELT		1		
	31	18211266T	RUBBER CUSHION		3		
	32	18511415T	MOTOR PULLEY		1		
	33	18511409T	MOTOR BRACKET		1		
	34	60020217T	MOTOR	EG-530AD-9B	1		
	35	18211223T	COLLAR SCREW		2		
	36	18511702T	SPRING		1		
	37	18511701T	EJECT S.LEV.		1		
	38	185102339T	M.BUT.LEVER.ASY		1		
	39	185102337T	REC BUT.LEVER		1		
	40	18510206TT	PLAY BUT.LEV		1		
	41	18510209T	FF BUT.LEVER(R)		1		
	42	18510208T	FF BUT.LEVER(F)		1		
	43	18510205TT	STOP BUT.LEV.		1		
	44	185102318ZT	P.BUT.LEVER ASY		1		
	46	18510260T	LEVER COLLER		1		
	47	18510268T	MODE BUT.SPRING		1		
	48	18510262T	E LOCK ARM SP.		1		
	49	18510257T	E HEAD ARM		1		
	50	18510270T	PROG BUT.LEV.SP		1		
	51	18510269T	LEVER SPRING		2		
	52	18510227T	PULL ARM SPRING		1		
	53	18510256T	SLIDE PLATE		1		
	54	185102314ZT	LOCK ACTR.ASS'Y		1		
	55	18510276T	SPRING		1		
	56	18650259T	AZIMUTH SP (D)		2		
	57	185102315ZT	SW ACTR ASS'Y		1		

BLOCK NO. M2MM

⚠	REF.	PARTS NO.	PARTS NAME	REMARKS	QTY	SUFFIX	CLR
	58	18510267T	SPRING		2		
	59	185102504T	BUT. BASE ASS'Y		1		
	60	18510221T	SPRING		1		
	61	18510241T	FF CONTROL ARM		1		
	62	185102101T	BUT.LEV.SP.(P)		1		
	63	18510286T	MP BUT.LEV.SP.		1		
	64	99990013T	P WASHER	1.75X4X0.3	2		
	65	18510122T	MODE LEVER		1		
	66	18510123T	MODE LEV.SP.		1		
	68	185111301ZT	REEL PLATE ASSY		1		
	69	185111501ZT	REEL ASS'Y		2		
	70	185118303T	SUB CHAS. ASS'Y		1		
	71	18511810T	RC ARM		2		
	72	18511805T	AUTO CONT.ARM(F		1		
	73	18511806T	AUTO CONT.ARM(R		1		
	74	18511812T	SCREW		2		
	76	18512001T	AUTO LEVER (F)		1		
	77	18512004T	A.LEV.(F)SPRING		1		
	78	18512005T	SPRING STOPPER		2		
	79	18512002T	AUTO LEVER (R)		1		
	80	18512003T	A.LEV.(R)SPRING		1		
	81	18510303T	TURN OVER ARM		1		
	82	18510304T	TURN OV. SPRING		1		
	83	18511602T	FF SW PLATE		1		
	84	640101172T	LEAF SWITCH		1		
	85	18510436T	SCREW HOLDER		2		
	86	185105302T	ARM(F) ASS'Y		1		
	87	18510504T	ARM(F) SPRING		1		
	88	18510503T	T CAM GEAR (F)		1		
	89	185106302T	ARM(R) ASS'Y		1		
	90	18510603T	ARM(R) SPRING		1		
	91	18510602T	T CAM GEAR (R)		1		
	92	185107301ZT	FF G.ARM(F)ASSY		1		
	93	18510703T	FF GEAR		2		
	94	18510704T	G.ARM SPRING(F)		2		
	95	18510705T	FF G.ARM COLLAR		2		
	96	185108301ZT	FF G.ARM(R)ASSY		1		
	97	185109502ZT	P.ROLLER(F)ASSY		1		
	98	185110502ZT	P.ROLLER(R)ASSY		1		
	100	18510109T	RECORD SAF.LEV.		1		
	101	993320032T	SCREW	M2X3(SPECIAL)	1		
	102	96740000T	TAPPING SCREW	M2X6	3		
	103	98760000T	POLY.WASHER	2.1X5X0.5	2		
	104	96960000T	SCREW	M1.7X4.5	1		
	105	96950000T	CAM.S.TAP SCREW	M1.7X4	2		
	106	99992036T	SCREW	M2X12	2		
	107	97860000T	POLY WASHER	2X3.5X0.3	2		
	108	98890000T	POLY.WASHER	2.1X3XX0.3	2		
	109	99990309T	P WASHER	1.45X4X0.5	2		
	110	91800000T	SCREW	M2X4	2		
	112	94210000T	P.WASHER	1.2X3X0.25	8		
	113	9C1917303T	TAP.SCREW	1.7X3	3		
	114	98880000T	POLY.WASHER	1.2X3X0.4	2		
	115	99990009T	P WASHER	3.1X8.5X0.13	2		

BLOCK NO. M2MM

⚠	REF.	PARTS NO.	PARTS NAME	REMARKS	QTY	SUFFIX	CLR
	116	9C2017851T	TAP SCREW	1.7X8.5	6		
	117	91850000T	SCREW	M2X10	1		
	118	91810000T	SCREW	M2X5	1		
	119	99992012T	TWO LOCK SCREW	M2X4	1		
	121	18511606T	SPRING		1		
	124	REE2000X	E.RING	2.0	2		
	125	9C1917403T	TAP SCREW	1.7X4	2		
	126	99990016T	P WASHER	2.8X6X0.5	1		
	127	96750000T	SCREW	M2X8	1		
	128	18510457T	RP COLLAR		1		
	129	91840000T	SCREW	M2X8	1		
	131	18511125T	PLAY SW BKT		1		
	132	640101142T	LEAF SWITCH	MSW-1482CV	1		
	133	9C0317503T	SCREW	M1.7X5	1		
	135	18511608T	REC SW BRACKET		1		
	136	64010138T	LEAF SWITCH	MSW-1275	1		
	137	9P0420031T	SCREW M2X3	M2X3	1		
	138	9P0420051T	SCREW(M2 X 5)	M2X5	1		

CD Mechanism Ass'y and Parts List

Block No. M 3 M M

No. EXL-M6

■Grease Point

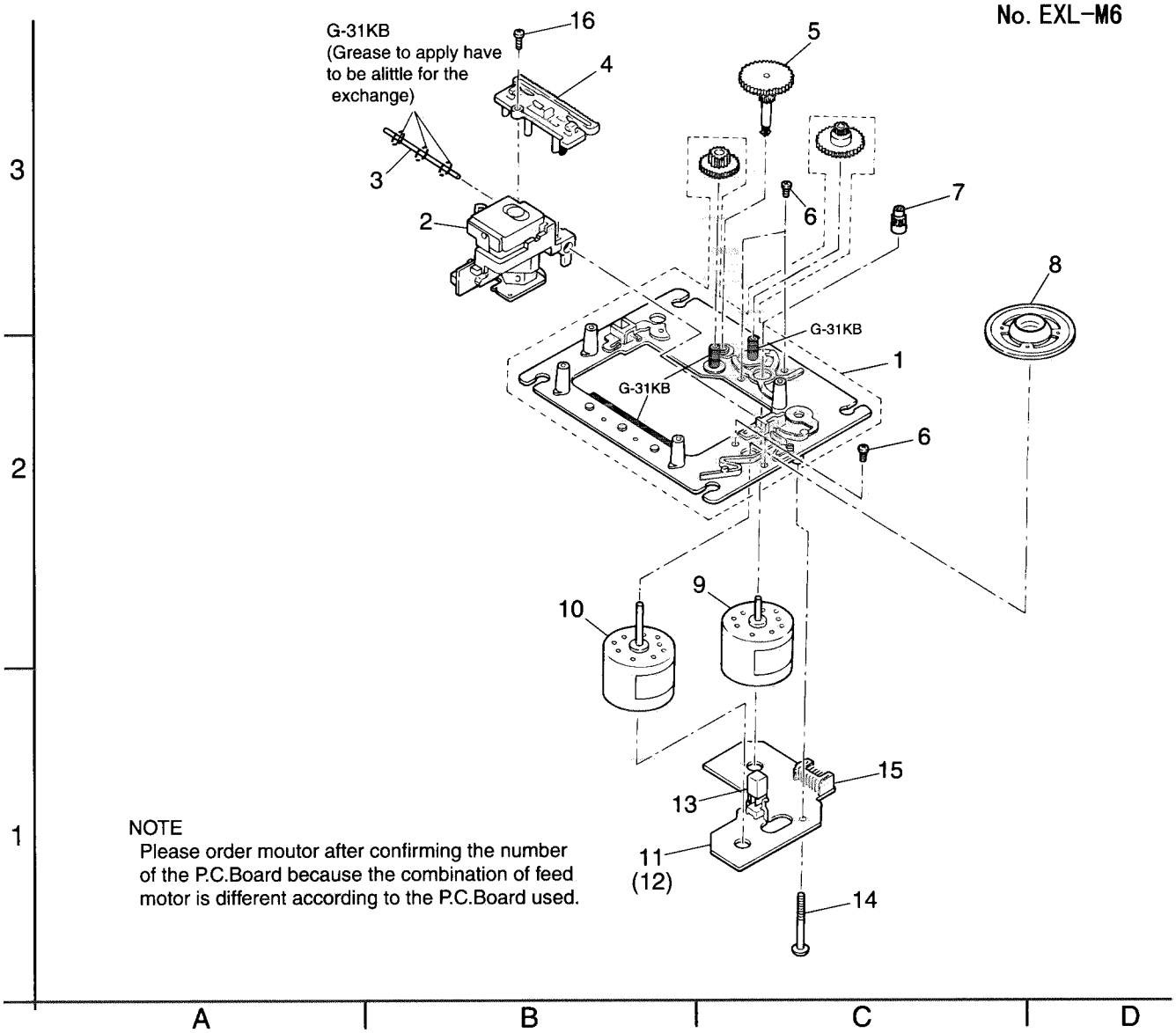

NOTE
Please order moutor after confirming the number of the P.C.Board because the combination of feed motor is different according to the P.C.Board used.

■CD Mechanism Assembly Parts List

⚠	Item	Parts Number	Parts Name	Q'ty	Description	Area
	1	EPB-002PK	MECHA. BASE ASSY	1		
	2	OPTIMA-150S	OPTICAL PICK UP	1		
	3	E407782-001	CD SHAFT	1		
	4	E307746-001	CD RACK	1		
	5	EPB-003A	MECHA GEAR	1		
	6	SDSP2003N	SCREW	4		
	7	E406750-001	PINION GEAR	1		
	8	EPB309173A	TURN TABLE	1		
	9	E406784-001	FEED MOTOR	1	Use the No.11 P.C.Board	
		MDN-4RA3ETA-1	FEED MOTOR	1	Use the No.12 P.C.Board	
	10	E406783-001	SPINDLE MOTOR	1		
	11	EMW10190-001(S)	P. C. BOARD	1		
	12	EMW10190-221(S)	P. C. BOARD	1		
	13	ESB1100-005	LEAF SWITCH	1		
	14	E75832-001	SCREW	1		
	15	EMV5109-006B	CONN. TERMINAL	1		
	16	SDSF2006Z	SCREW	1		

Electrical Parts List

■Mein P.C. Board (VMW1474)

BLOCK NO. 01

⚠	REF.	PARTS NO.	PARTS NAME	REMARKS	SUFFIX
	BP 1	VBP1M3B-004	BP FILTER	BPF	
	C 3	QCSB1HK-6R8Y	C CAPACITOR	6.8PF 10% 50V	
	C 6	QCVB1CN-103Y	C CAPACITOR	.010MF 30% 16V	
	C 7	QCS11HJ-200	C CAPACITOR	20PF 5% 50V	
	C 9	QCS11HJ-120	C CAPACITOR	12PF 5% 50V	
	C 13	QCC11EM-223V	C CAPACITOR	.022MF 20% 25V	
	C 16	QCVB1CN-103Y	C CAPACITOR	.010MF 30% 16V	
	C 21	QCC11EM-473V	C CAPACITOR	.047MF 20% 25V	
	C 22	QFP41HJ-431	PP CAPACITOR	430PF 5% 50V	
	C 23	QCT30CH-120Y	C CAPACITOR	12PF 5% 50V	
	C 31	QCGB1HK-102	C CAPACITOR	1000PF 10% 50V	
	C 32	QCVB1CN-103Y	C CAPACITOR	.010MF 30% 16V	
	C 33	QET41AM-107	E CAPACITOR	100MF 20% 10V	
	C 35	QCVB1CN-103Y	C CAPACITOR	.010MF 30% 16V	
	C 36	QET41HM-475	E CAPACITOR	=R19	
	C 37	QCGB1HK-102	C CAPACITOR	1000PF 10% 50V	
	C 40	QET41HM-105	E CAPACITOR	1.0MF 20% 50V	
	C 41	QET41CM-106	E CAPACITOR	10MF 20% 16V	
	C 42	QCC11EM-473V	C CAPACITOR	.047MF 20% 25V	
	C 43	QCVB1CN-103Y	C CAPACITOR	.010MF 30% 16V	
	C 44	QETC1HM-104Z	E CAPACITOR	.10MF 20% 50V	
	C 45	QET41HM-474	E CAPACITOR	.47MF 20% 50V	
	C 47	QCC11EM-153V	C CAPACITOR	.015MF 20% 25V	
	C 48	QCC11EM-153V	C CAPACITOR	.015MF 20% 25V	
	C 49	QETC1HM-104Z	E CAPACITOR	.10MF 20% 50V	
	C 50	QETC1HM-104Z	E CAPACITOR	.10MF 20% 50V	
	C 51	QCBB1HK-331Y	C CAPACITOR	330PF 10% 50V	
	C 52	QCGB1HK-102	C CAPACITOR	1000PF 10% 50V	
	C 56	QCGB1HK-102	C CAPACITOR	1000PF 10% 50V	
	C 60	QCGB1HK-102	C CAPACITOR	1000PF 10% 50V	
	C 61	QET41AM-107	E CAPACITOR	100MF 20% 10V	
	C 62	QCT30CH-120Y	C CAPACITOR	12PF 5% 50V	
	C 63	QCGB1HK-102	C CAPACITOR	1000PF 10% 50V	
	C 64	QCT30CH-120Y	C CAPACITOR	12PF 5% 50V	
	C 65	QCGB1HK-102	C CAPACITOR	1000PF 10% 50V	
	C 69	QCXB1CM-222Y	C CAPACITOR	2200PF 20% 16V	
	C 70	QETC1HM-225Z	E CAPACITOR	2.2MF 20% 50V	
	C 71	QET41CM-226	E.CAPACITOR	22MF 20% 16V	
	C 77	QCGB1HK-102	C CAPACITOR	1000PF 10% 50V	
	C 79	QCSB1HK-5R6Y	C CAPACITOR	5.6PF 10% 50V	
	C 80	QCBB1HK-151Y	C CAPACITOR	150PF 10% 50V	B,E,EN
	C 80	QCBB1HK-151Y	C CAPACITOR	150PF 10% 50V	U,US,UX,UY,UT
	C 101	QFN41HJ-222	M CAPACITOR	2200PF 5% 50V	
	C 102	QFN81HJ-562	M CAPACITOR	5600PF 5% 50V	
	C 103	QET41CM-226	E.CAPACITOR	22MF 20% 16V	
	C 104	QFV41HJ-393ZM	CAPACITOR	.039MF 5% 50V	
	C 107	QET41HM-475	E CAPACITOR	4.7MF 20% 50V	
	C 108	QET41HM-105	E CAPACITOR	1.0MF 20% 50V	
	C 109	QFN41HJ-823	M CAPACITOR	.082MF 5% 50V	
	C 110	QFN41HJ-823	M CAPACITOR	.082MF 5% 50V	
	C 111	QFN41HJ-682	M CAPACITOR	6800PF 5% 50V	
	C 112	QFV41HJ-474	TF CAPACITOR	.47MF 5% 50V	
	C 113	QFN81HJ-223	M CAPACITOR	.022MF 5% 50V	
	C 114	QTE1C06-226Z	E CAPACITOR		
	C 115	QETC1HM-104Z	E CAPACITOR	.10MF 20% 50V	

BLOCK NO. 01

⚠	REF.	PARTS NO.	PARTS NAME	REMARKS	SUFFIX
	C 117	QET41HM-105	E CAPACITOR	1.0MF 20% 50V	
	C 119	QTE1H06-475Z	E CAPACITOR		
	C 120	QET41CM-107	E CAPACITOR	100MF 20% 16V	
	C 121	QCBB1HK-221Y	C CAPACITOR	220PF 10% 50V	
	C 122	QET41CM-107	E CAPACITOR	100MF 20% 16V	
	C 123	QETB1CM-228	E CAPACITOR	2200MF 20% 16V	
	C 124	QFN41HJ-104	M CAPACITOR	.10MF 5% 50V	
	C 125	QTE1C06-226Z	E CAPACITOR	USE ONLY AZM	
	C 130	QCS11HJ-221	C CAPACITOR	220PF 5% 50V	
	C 134	QFN81HJ-562	M CAPACITOR	5600PF 5% 50V	
	C 155	QCBB1HK-181Y	C CAPACITOR	180PF 10% 50V	
	C 201	QFN41HJ-222	M CAPACITOR	2200PF 5% 50V	
	C 202	QFN81HJ-562	M CAPACITOR	5600PF 5% 50V	
	C 203	QET41CM-226	E.CAPACITOR	22MF 20% 16V	
	C 204	QFV41HJ-393ZM	CAPACITOR	.039MF 5% 50V	
	C 207	QET41HM-475	E CAPACITOR	4.7MF 20% 50V	
	C 208	QET41HM-105	E CAPACITOR	1.0MF 20% 50V	
	C 209	QFN41HJ-823	M CAPACITOR	.082MF 5% 50V	
	C 210	QFN41HJ-823	M CAPACITOR	.082MF 5% 50V	
	C 211	QFN41HJ-682	M CAPACITOR	6800PF 5% 50V	
	C 212	QFV41HJ-474	TF CAPACITOR	.47MF 5% 50V	
	C 213	QFN81HJ-223	M CAPACITOR	.022MF 5% 50V	
	C 214	QTE1C06-226Z	E CAPACITOR		
	C 215	QETC1HM-104Z	E CAPACITOR	.10MF 20% 50V	
	C 217	QET41HM-105	E CAPACITOR	1.0MF 20% 50V	
	C 219	QTE1H06-475Z	E CAPACITOR		
	C 220	QET41CM-107	E CAPACITOR	100MF 20% 16V	
	C 221	QCBB1HK-221Y	C CAPACITOR	220PF 10% 50V	
	C 222	QET41CM-107	E CAPACITOR	100MF 20% 16V	
	C 223	QETB1CM-228	E CAPACITOR	2200MF 20% 16V	
	C 224	QFN41HJ-104	M CAPACITOR	.10MF 5% 50V	
	C 225	QTE1C06-226Z	E CAPACITOR	USE ONLY AZM	
	C 230	QCS11HJ-221	C CAPACITOR	220PF 5% 50V	
	C 234	QFN81HJ-562	M CAPACITOR	5600PF 5% 50V	
	C 255	QCBB1HK-181Y	C CAPACITOR	180PF 10% 50V	
	C 303	QCS11HJ-151	C CAPACITOR	150PF 5% 50V	
	C 304	QET41AM-476	E CAPACITOR	47MF 20% 10V	
	C 305	QET41CM-226	E.CAPACITOR	22MF 20% 16V	
	C 306	QET41AM-476	E CAPACITOR	47MF 20% 10V	B,E,EN,J
	C 306	QETC1AM-107ZN	CAPACITOR	100MF 20% 10V	U,US,UX,UY,UT
	C 308	QCS11HJ-181	C CAPACITOR	180PF 5% 50V	
	C 309	QCXB1CM-182Y	C CAPACITOR	1800PF 20% 16V	
	C 310	QFN41HJ-182	M CAPACITOR	1800PF 5% 50V	
	C 312	QFN41HJ-682	M CAPACITOR	6800PF 5% 50V	
	C 313	QET41AM-476	E CAPACITOR	47MF 20% 10V	
	C 315	QFN41HJ-472	M CAPACITOR	4700PF 5% 50V	
⚠	C 318	QETM1EM-688	E CAPACITOR	6800MF 20% 25V	
	C 319	QET41EM-106	E CAPACITOR	10MF 20% 25V	
	C 320	QET41CM-227	E CAPACITOR	220MF 20% 16V	
	C 321	QET41AM-107	E CAPACITOR	100MF 20% 10V	
	C 322	QCGB1HK-102	C CAPACITOR	1000PF 10% 50V	
	C 323	QET41AM-107	E CAPACITOR	100MF 20% 10V	
	C 324	QFN41HJ-102	M CAPACITOR	1000PF 5% 50V	
	C 325	QET41AM-107	E CAPACITOR	100MF 20% 10V	
	C 326	QET41AM-107	E CAPACITOR	100MF 20% 10V	

BLOCK NO. 01

⚠	REF.	PARTS NO.	PARTS NAME	REMARKS	SUFFIX
	C 327	QET41AM-107	E CAPACITOR	100MF 20% 10V	
	C 328	QET41HM-105	E CAPACITOR	1.0MF 20% 50V	
	C 329	QETC1HM-104Z	E CAPACITOR	.10MF 20% 50V	
	C 330	QET41HM-475	E CAPACITOR	4.7MF 20% 50V	
	C 331	QCGB1HK-102	C CAPACITOR	1000PF 10% 50V	
	C 350	QET41HM-475	E CAPACITOR	4.7MF 20% 50V	
	C 352	QETC1AM-107ZN	CAPACITOR	100MF 20% 10V	U,US,UX,UY,UT
	C 353	QET41CM-106	E CAPACITOR	10MF 20% 16V	
	C 354	QET41AM-227	E CAPACITOR	220MF 20% 10V	
	C 356	QETC1CM-226Z	AL E.CAPACITOR	22MF 20% 16V	U,US,UX,UY,UT
	C 357	QET41CM-226	E CAPACITOR	22MF 20% 16V	
	C 604	QET41AM-107	E CAPACITOR	100MF 20% 10V	
	C 605	QET41EM-106	E CAPACITOR	10MF 20% 25V	
	C 606	QCGB1HK-102	C CAPACITOR	1000PF 10% 50V	
	C 607	QCGB1HK-102	C CAPACITOR	1000PF 10% 50V	
	C 608	QET41HM-105	E CAPACITOR	1.0MF 20% 50V	
	C 609	QCBB1HK-101Y	C CAPACITOR	100PF 10% 50V	
	C 610	QFLC1HJ-273ZM	M CAPACITOR	.027MF 5% 50V	
	C 611	QCXB1CM-222Y	C CAPACITOR	2200PF 20% 16V	
	C 612	QCVB1CN-103Y	C CAPACITOR	.010MF 30% 16V	
	C 613	QCBB1HK-331Y	C CAPACITOR	330PF 10% 50V	
	C 614	QFLC1HJ-104ZM	M CAPACITOR	.10MF 5% 50V	
	C 615	QCFB1HZ-223	C CAPACITOR	.022MF +80:-20% 50V	
	C 616	QCFB1HZ-223	C CAPACITOR	.022MF +80:-20% 50V	
	C 617	QCFB1HZ-223	C CAPACITOR	.022MF +80:-20% 50V	
	C 618	QCXB1CM-222Y	C CAPACITOR	2200PF 20% 16V	
	C 619	QCBB1HK-271Y	C CAPACITOR	270PF 10% 50V	
	C 620	QCS11HJ-470	C CAPACITOR	47PF 5% 50V	
	C 621	QCBB1HK-821Y	C CAPACITOR	820PF 10% 50V	
	C 622	QET41AM-476	E CAPACITOR	47MF 20% 10V	
	C 623	QFLC1HJ-104ZM	M CAPACITOR	.10MF 5% 50V	
	C 628	QCC11EM-473V	C CAPACITOR	.047MF 20% 25V	
	C 629	QET41AM-107	E CAPACITOR	100MF 20% 10V	
	C 631	QET41AM-477	E CAPACITOR	470MF 20% 10V	
	C 632	QET41AM-107	E CAPACITOR	100MF 20% 10V	
	C 651	QCS11HJ-220	C CAPACITOR	22PF 5% 50V	
	C 652	QCS11HJ-220	C CAPACITOR	22PF 5% 50V	
	C 653	QCFB1HZ-223	C CAPACITOR	.022MF +80:-20% 50V	
	C 655	QCC11EM-473V	C CAPACITOR	.047MF 20% 25V	
	C 661	QCBB1HK-471Y	C CAPACITOR	470PF 10% 50V	
	C 662	QCFB1HZ-223	C CAPACITOR	.022MF +80:-20% 50V	
	C 663	QFLC1HJ-223ZM	M CAPACITOR	.022MF 5% 50V	
	C 664	QCFB1HZ-223	C CAPACITOR	.022MF +80:-20% 50V	
	C 665	QFV41HJ-104ZM	TF CAPACITOR	.10MF 5% 50V	
	C 671	QCXB1CM-222Y	C CAPACITOR	2200PF 20% 16V	
	C 672	QCXB1CM-222Y	C CAPACITOR	2200PF 20% 16V	
	C 673	QET41AM-227	E CAPACITOR	220MF 20% 10V	
	C 674	QCFB1HZ-223	C CAPACITOR	.022MF +80:-20% 50V	
	C 675	QCGB1HK-102	C CAPACITOR	AG-DG	
	C 691	QCBB1HK-151Y	C CAPACITOR	DENGEN NOISE	
	C 692	QCBB1HK-151Y	C CAPACITOR	DENGEN NOISE	
	C 693	QCBB1HK-151Y	C CAPACITOR	DENGEN NOISE	
	C 694	QCBB1HK-151Y	C CAPACITOR	DENGEN NOISE	
	C 698	QCGB1HK-102	C CAPACITOR	1000PF 10% 50V	
	C 901	QCF21HP-223A	C.CAPACITOR	.022MF +80:-20%	

BLOCK NO. 01

⚠	REF.	PARTS NO.	PARTS NAME	REMARKS	SUFFIX
	C 902	QCF21HP-223A	C.CAPACITOR	.022MF +80:-20%	
	C 903	QCF21HP-223A	C.CAPACITOR	.022MF +80:-20%	
	C 904	QCF21HP-223A	C.CAPACITOR	.022MF +80:-20%	
	C 905	QCVB1CN-103Y	C CAPACITOR	.010MF 30% 16V	
	C 906	QCVB1CN-103Y	C CAPACITOR	.010MF 30% 16V	
	C 908	QCVB1CN-103Y	C CAPACITOR	.010MF 30% 16V	
	C 909	QET41HM-475	E CAPACITOR	4.7MF 20% 50V	
	C 910	QET41AM-227	E CAPACITOR	220MF 20% 10V	
	C 911	QET41CM-226	E.CAPACITOR	22MF 20% 16V	
	C 912	QCVB1CN-103Y	C CAPACITOR	.010MF 30% 16V	
	C 913	QCVB1CN-103Y	C CAPACITOR	.010MF 30% 16V	
	C 914	QET41AM-227	E CAPACITOR	220MF 20% 10V	
	C 915	QET41AM-107	E CAPACITOR	100MF 20% 10V	
	C 916	QET41AM-476	E CAPACITOR	47MF 20% 10V	
	CF 1	QAX0403-001	C FILTER		
	CF 3	VCF1Z2Z-117Z	C FILTER		
	CF 4	QAX0409-001	CERA LOCK		
	CM 1	QETC1HM-104Z	E CAPACITOR	.10MF 20% 50V	U,US,UX,UY,UT
	CM 2	QCBB1HK-151Y	C CAPACITOR	150PF 10% 50V	U,US,UX,UY,UT
	CM 3	QET41AM-107	E CAPACITOR	100MF 20% 10V	U,US,UX,UY,UT
	CM 4	QCC11EM-103V	C CAPACITOR	.010MF 20% 25V	U,US,UX,UY,UT
	CM 5	QETC1HM-104Z	E CAPACITOR	.10MF 20% 50V	U,US,UX,UY,UT
	CM 6	QETC1HM-104Z	E CAPACITOR	.10MF 20% 50V	U,US,UX,UY,UT
	CN301	VMC0040-004	CONNECTOR	MAIN(TO HEAD)	
	CN303	QGF1212C1-13	FFC CONNE	MAIN(TO CTRL)	
	CN304	QGF1212C1-17	FFC CONNE	MAIN(TO CTRL)	
	CN306	TID-X03P-MI	CONNECTOR	SAME AS VMZ0049	
	CN307	5268-03A	CONNECTOR	SAME AS VMZ0049	
	CN308	TIP-X06P-B2	CONNECTOR	MAIN(TO MOTOR)	
	CN309	TXLL-004-M	CONNECTOR	MAIN(TO SPK)	
	CN310	VMC0040-003	CONNECTOR	TEST POINT	
	CN601	QGF1025C1-15	21-41 CONNECTOR	TO RF	
	D 1	SVC203SPA-JV-T	VARI CAP		
	D 2	SVC203SPA-JV-T	VARI CAP		
	D 5	1SS133-T2	DIODE		
	D 6	1SS133-T2	DIODE		
	D 8	KV1555N-T	VARI CAP		
	D 12	1N4001	DIODE		
	D 301	1SS133-T2	DIODE		
⚠	D 303	1SS133-T2	DIODE		
	D 304	1SS133-T2	DIODE		
	D 305	1SS133-T2	DIODE		
	D 307	1SS133-T2	DIODE		
	D 661	1SS133-T2	DIODE		
⚠	D 901	1N5401TM	DIODE		
⚠	D 902	1N5401TM	DIODE		
⚠	D 903	1N5401TM	DIODE		
⚠	D 904	1N5401TM	DIODE		
	D 905	1SS133-T2	DIODE		
	D 906	1SS133-T2	DIODE		
	D 907	1SS133-T2	DIODE		
⚠	D 908	1SS133-T2	DIODE		
	D 909	1SS133-T2	DIODE		
	D 910	1SS133-T2	DIODE		
	D 911	1SS133-T2	DIODE		

BLOCK NO. 01

⚠	REF.	PARTS NO.	PARTS NAME	REMARKS	SUFFIX
	D 912	1N4001	DIODE		
	D 914	1SS133-T2	DIODE		
	D 915	1SS133-T2	DIODE		
	D 917	1SS133-T2	DIODE		
	D 918	1SS133-T2	DIODE		
	D 995	1SS133-T2	DIODE		
	DM 1	1SS133-T2	DIODE		U,US,UX,UY,UT
	DM 2	1SS133-T2	DIODE		U,US,UX,UY,UT
	FC901	EMG7331-003Z	FUSE CLIP	FOR F901	U,US,UX,UY,UT
	FC902	EMG7331-003Z	FUSE CLIP	FOR F902	
	FC903	EMG7331-003Z	FUSE CLIP	FOR F903	J
	FC904	EMG7331-003Z	FUSE CLIP	FOR F901	U,US,UX,UY,UT
	FC905	EMG7331-003Z	FUSE CLIP	FOR F902	
	FC906	EMG7331-003Z	FUSE CLIP	FOR F903	J
	IC 2	TA2008AN	IC		
	IC 3	LC72136N	IC		
	IC301	TA2068N	IC	PB&REC	
⚠	IC302	LA4597K	IC	POWER AMP	
	IC303	M62420SP-700	IC	VOL&TONE	
⚠	IC304	LA4597K	IC	POWER AMP	
	IC304	BA15218N	IC	S.BASS	
	IC601	AN8806SB	IC	RF AMP	
⚠	IC602	BA6897FP	IC	DRIVER	
	IC603	MN35510	IC	1CHIP PROCESSER	
⚠	J 9	QNC0042-001	AC SOCKET		B,E,EN
⚠	J 9	QNC0042-001	AC SOCKET		U,US,UX,UY,UT
⚠	J 9	QNC0043-001	AC SOCKET		J
	J 301	HSJ2000-01-010	HEADPHONE JACK	H.HONES JACK	
	JM 1	HSJ2000-01-010	HEADPHONE JACK		U,US,UX,UY,UT
	K 601	VQZ0048-009	INDUCTOR		
	K 602	VQZ0048-009	INDUCTOR		
	L 1	VQF1B20-019	OSC COIL	FM OSC	
	L 2	VQC1505-002T	RF COIL	FM RF	
	L 3	VQB008M-506	BAR ANTENA	MW RF	
	L 4	QQR0723-001	OSC COIL(MW)	MW OSC	
	L 7	VQP0018-221	INDUCTOR		
	L 12	V03047-16	INDUCTOR		
	L 601	3A839N	INDUCTOR		
	L 901	VQP0028-330Z	INDUCTOR		
	Q 101	2SC2001/LK/-T	TRANSISTOR	S MUTE	
	Q 103	2SC3330/ST/-T	TRANSISTOR		
	Q 201	2SC2001/LK/-T	TRANSISTOR	S MUTE	
	Q 203	2SC3330/ST/-T	TRANSISTOR		
	Q 302	DTA114ES	TRANSISTOR TAPE		
	Q 303	2SC2458(Y,GR)	TRANSISTOR		
	Q 304	2SA1015/YG/-T	TRANSISTOR		
	Q 305	DTC114ESA-T	D.TRANSISTOR		
	Q 306	8550C	TRANSISTOR		
	Q 308	DTC143ES	TRANSISTOR		
	Q 309	2SC2458(Y,GR)	TRANSISTOR		
	Q 310	DTA143ES	TRANSISTOR		
	Q 311	2SC2001/LK/-T	TRANSISTOR		
	Q 312	2SC2001/LK/-T	TRANSISTOR		
	Q 313	2SC2001/LK/-T	TRANSISTOR		
	Q 315	2SC2458(Y,GR)	TRANSISTOR		

BLOCK NO. 01

⚠	REF.	PARTS NO.	PARTS NAME	REMARKS	SUFFIX
	Q 316	2SA1015/YG/-T	TRANSISTOR		
	Q 317	2SC2458(Y,GR)	TRANSISTOR		
	Q 318	DTA143ES	TRANSISTOR		
	Q 601	2SA952/LK/-T	TRANSISTOR		
	Q 631	2SA952/LK/-T	TRANSISTOR		
⚠	Q 901	2SB772/QP/	T.RRANSISTOR		
⚠	Q 902	2SC2458(Y,GR)	TRANSISTOR	SW8V REG	
⚠	Q 903	8550C	TRANSISTOR		
	Q 904	2SC2458(Y,GR)	TRANSISTOR		
⚠	Q 904	2SC2458(Y,GR)	TRANSISTOR	SW8V REG	
	Q 906	8550C	TRANSISTOR		
	Q 907	2SC2458(Y,GR)	TRANSISTOR		
	Q 908	2SB772/QP/	T.RRANSISTOR		
	Q 909	2SC2458(Y,GR)	TRANSISTOR		
⚠	Q 911	2SC2458(Y,GR)	TRANSISTOR	CDB	
	QM 1	2SC2458(Y,GR)	TRANSISTOR		U,US,UX,UY,UT
	QM 2	2SC2458(Y,GR)	TRANSISTOR		U,US,UX,UY,UT
	R 1	QRD161J-104	C RESISTOR	100K 5% 1/4W	
	R 2	QRD161J-473	C RESISTOR	47K 5% 1/4W	
	R 3	QRD167J-4R7	C RESISTOR	4.7 5% 1/4W	
	R 7	QRD161J-104	C RESISTOR	100K 5% 1/4W	
	R 9	QRD161J-102	C RESISTOR	1.0K 5% 1/4W	
	R 13	QRD161J-104	C RESISTOR	100K 5% 1/4W	
	R 18	QRD161J-102	C RESISTOR	1.0K 5% 1/4W	
	R 20	QRD161J-102	C RESISTOR	1.0K 5% 1/4W	
	R 28	QRD161J-512	C RESISTOR	5.1K 5% 1/4W	
	R 30	QRD161J-104	C RESISTOR	100K 5% 1/4W	
	R 31	QRD161J-223	C RESISTOR	22K 5% 1/4W	
	R 32	QRD161J-223	C RESISTOR	22K 5% 1/4W	
	R 33	QRD161J-101	C RESISTOR	100 5% 1/4W	
	R 34	QRD161J-393	C RESISTOR	39K 5% 1/4W	
	R 35	QRD161J-393	C RESISTOR	39K 5% 1/4W	
	R 37	QRD161J-560	C RESISTOR	56 5% 1/4W	
	R 38	QRE141J-183Y	C RESISTOR	18K 5% 1/4W	
	R 39	QRE141J-183Y	C RESISTOR	18K 5% 1/4W	
	R 44	QRD161J-222	C RESISTOR	2.2K 5% 1/4W	
	R 46	QRE141J-103Y	C RESISTOR	10K 5% 1/4W	
	R 47	QRD161J-221	C RESISTOR	220 5% 1/4W	
	R 48	QRD161J-102	C RESISTOR	1.0K 5% 1/4W	
	R 52	QRD161J-472	C RESISTOR	4.7K 5% 1/4W	
	R 54	QRD161J-222	C RESISTOR	2.2K 5% 1/4W	
	R 55	QRD161J-222	C RESISTOR	2.2K 5% 1/4W	
	R 56	QRD167J-332	C RESISTOR	3.3K 5% 1/4W	
	R 57	QRD161J-102	C RESISTOR	1.0K 5% 1/4W	
	R 59	QRD161J-102	C RESISTOR	1.0K 5% 1/4W	
	R 60	QRD161J-102	C RESISTOR	1.0K 5% 1/4W	
	R 61	QRD161J-102	C RESISTOR	1.0K 5% 1/4W	
	R 64	QRD161J-102	C RESISTOR	1.0K 5% 1/4W	
	R 101	QRD161J-302	C RESISTOR	3.0K 5% 1/4W	
	R 102	QRD161J-102	C RESISTOR	1.0K 5% 1/4W	
	R 103	QRD161J-182	C RESISTOR	1.8K 5% 1/4W	
	R 104	QRD167J-332	C RESISTOR	3.3K 5% 1/4W	
	R 106	QRD161J-823	C RESISTOR	82K 5% 1/4W	
	R 107	QRD161J-680	C RESISTOR	68 5% 1/4W	
	R 108	QRE141J-103Y	C RESISTOR	10K 5% 1/4W	

BLOCK NO. 01

⚠	REF.	PARTS NO.	PARTS NAME	REMARKS	SUFFIX
	R 109	QRD161J-182	C RESISTOR	1.8K 5% 1/4W	
	R 110	QRD161J-182	C RESISTOR	1.8K 5% 1/4W	
	R 111	QRD167J-562	C RESISTOR	5.6K 5% 1/4W	
	R 112	QRD161J-224	C RESISTOR	220K 5% 1/4W	
	R 113	QRD161J-224	C RESISTOR	220K 5% 1/4W	
	R 114	QRD161J-153	C RESISTOR	15K 5% 1/4W	
	R 116	QRD161J-102	C RESISTOR	1.0K 5% 1/4W	
	R 117	QRE141J-103Y	C RESISTOR	10K 5% 1/4W	
	R 120	QRE141J-183Y	C RESISTOR	18K 5% 1/4W	
⚠	R 121	QRD161J-820	C RESISTOR	82 5% 1/4W	
	R 122	QRD161J-2R2	C RESISTOR	2.2 5% 1/4W	
	R 123	QRD161J-101	C RESISTOR	100 5% 1/4W	
	R 124	QRD161J-222	C RESISTOR	2.2K 5% 1/4W	
	R 134	QRD161J-392	C RESISTOR	3.9K 5% 1/4W	
	R 136	QRD161J-272	C RESISTOR	2.7K 5% 1/4W	
	R 137	QRD167J-682	C RESISTOR	6.8K 5% 1/4W	
	R 201	QRD161J-302	C RESISTOR	3.0K 5% 1/4W	
	R 202	QRD161J-102	C RESISTOR	1.0K 5% 1/4W	
	R 203	QRD161J-182	C RESISTOR	1.8K 5% 1/4W	
	R 204	QRD167J-332	C RESISTOR	3.3K 5% 1/4W	
	R 206	QRD161J-823	C RESISTOR	82K 5% 1/4W	
	R 207	QRD161J-680	C RESISTOR	68 5% 1/4W	
	R 208	QRE141J-103Y	C RESISTOR	10K 5% 1/4W	
	R 209	QRD161J-182	C RESISTOR	1.8K 5% 1/4W	
	R 210	QRD161J-182	C RESISTOR	1.8K 5% 1/4W	
	R 211	QRD167J-562	C RESISTOR	5.6K 5% 1/4W	
	R 212	QRD161J-224	C RESISTOR	220K 5% 1/4W	
	R 213	QRD161J-224	C RESISTOR	220K 5% 1/4W	
	R 214	QRD161J-153	C RESISTOR	15K 5% 1/4W	
	R 216	QRD161J-102	C RESISTOR	1.0K 5% 1/4W	
	R 217	QRE141J-103Y	C RESISTOR	10K 5% 1/4W	
	R 220	QRE141J-183Y	C RESISTOR	18K 5% 1/4W	
⚠	R 221	QRD161J-820	C RESISTOR	82 5% 1/4W	
	R 222	QRD161J-2R2	C RESISTOR	2.2 5% 1/4W	
	R 223	QRD161J-101	C RESISTOR	100 5% 1/4W	
	R 224	QRD161J-222	C RESISTOR	2.2K 5% 1/4W	
	R 234	QRD161J-392	C RESISTOR	3.9K 5% 1/4W	
	R 236	QRD161J-272	C RESISTOR	2.7K 5% 1/4W	
	R 237	QRD167J-682	C RESISTOR	6.8K 5% 1/4W	
	R 302	QRE141J-103Y	C RESISTOR	10K 5% 1/4W	
	R 303	QRD161J-475	C RESISTOR	4.7M 5% 1/4W	
	R 304	QRE141J-103Y	C RESISTOR	10K 5% 1/4W	
	R 305	QRD161J-182	C RESISTOR	1.8K 5% 1/4W	
	R 306	QRD161J-182	C RESISTOR	1.8K 5% 1/4W	
	R 307	QRD167J-332	C RESISTOR	3.3K 5% 1/4W	
	R 308	QRD167J-562	C RESISTOR	5.6K 5% 1/4W	
	R 309	QRD167J-562	C RESISTOR	5.6K 5% 1/4W	
	R 310	QRD161J-123	C RESISTOR	12K 5% 1/4W	
	R 311	QRD161J-101	C RESISTOR	100 5% 1/4W	
	R 312	QRD161J-331	C RESISTOR	330 5% 1/4W	
	R 313	QRD161J-120	C RESISTOR	12 5% 1/4W	
	R 315	QRD161J-101	C RESISTOR	100 5% 1/4W	
	R 316	QRD167J-332	C RESISTOR	3.3K 5% 1/4W	
	R 317	QRE141J-103Y	C RESISTOR	10K 5% 1/4W	
	R 318	QRD161J-101	C RESISTOR	100 5% 1/4W	

BLOCK NO. 01

⚠	REF.	PARTS NO.	PARTS NAME	REMARKS	SUFFIX
	R 319	QRD161J-101	C RESISTOR	100 5% 1/4W	
	R 320	QRD167J-562	C RESISTOR	5.6K 5% 1/4W	
	R 321	QRD167J-562	C RESISTOR	5.6K 5% 1/4W	
	R 322	QRD161J-104	C RESISTOR	100K 5% 1/4W	
	R 323	QRD161J-222	C RESISTOR	2.2K 5% 1/4W	
	R 327	QRD167J-682	C RESISTOR	6.8K 5% 1/4W	
	R 328	QRE141J-103Y	C RESISTOR	10K 5% 1/4W	
	R 329	QRD161J-472	C RESISTOR	4.7K 5% 1/4W	
	R 330	QRD161J-472	C RESISTOR	4.7K 5% 1/4W	
	R 331	QRD161J-101	C RESISTOR	100 5% 1/4W	
	R 332	QRE141J-103Y	C RESISTOR	10K 5% 1/4W	
	R 334	QRD161J-102	C RESISTOR	1.0K 5% 1/4W	U,US,UX,UY,UT
	R 356	QRE141J-103Y	C RESISTOR	10K 5% 1/4W	
	R 360	QRE141J-103Y	C RESISTOR	10K 5% 1/4W	
	R 361	QRD161J-474	C RESISTOR	470K 5% 1/4W	
	R 371	QRE141J-103Y	C RESISTOR	10K 5% 1/4W	
	R 372	QRD167J-332	C RESISTOR	3.3K 5% 1/4W	
	R 373	QRD161J-101	C RESISTOR	100 5% 1/4W	
	R 374	QRD161J-104	C RESISTOR	100K 5% 1/4W	
	R 601	QRD161J-123	C RESISTOR	12K 5% 1/4W	
	R 603	QRD161J-125	C RESISTOR	1.2M 5% 1/4W	
	R 605	QRD167J-134	C RESISTOR	130K 5% 1/4W	
	R 606	QRD161J-913	C RESISTOR	91K 5% 1/4W	
	R 607	QRD161J-273	C RESISTOR	27K 5% 1/4W	
	R 609	QRD161J-114	C RESISTOR	110K 5% 1/4W	
	R 610	QRD161J-154	C RESISTOR	150K 5% 1/4W	
	R 612	QRE141J-103Y	C RESISTOR	10K 5% 1/4W	
	R 613	QRD167J-121	C RESISTOR	120 5% 1/4W	
	R 614	QRD161J-100	C RESISTOR	10 5% 1/4W	
	R 615	QRD161J-120	C RESISTOR	12 5% 1/4W	
	R 616	QRD161J-910Y	C RESISTOR	91 5% 1/4W	
	R 621	QRD161J-330	C RESISTOR	33 5% 1/4W	
	R 622	QRD161J-330	C RESISTOR	33 5% 1/4W	
	R 623	QRD161J-330	C RESISTOR	33 5% 1/4W	
	R 631	QRD161J-331	C RESISTOR	330 5% 1/4W	
	R 632	QRD161J-101	C RESISTOR	100 5% 1/4W	
	R 633	QRD161J-273	C RESISTOR	27K 5% 1/4W	
	R 641	QRD161J-563	C RESISTOR	56K 5% 1/4W	
	R 642	QRD161J-123	C RESISTOR	12K 5% 1/4W	
	R 643	QRD161J-822	C RESISTOR	8.2K 5% 1/4W	
	R 644	QRD161J-223	C RESISTOR	22K 5% 1/4W	
	R 645	QRD161J-223	C RESISTOR	22K 5% 1/4W	
	R 646	QRD161J-182	C RESISTOR	1.8K 5% 1/4W	
	R 647	QRD167J-562	C RESISTOR	5.6K 5% 1/4W	
	R 651	QRD161J-102	C RESISTOR	1.0K 5% 1/4W	
	R 652	QRD161J-102	C RESISTOR	1.0K 5% 1/4W	
	R 653	QRD161J-102	C RESISTOR	1.0K 5% 1/4W	
	R 654	QRD161J-102	C RESISTOR	1.0K 5% 1/4W	
	R 659	QRD161J-271	C RESISTOR	270 5% 1/4W	
	R 661	QRD161J-104	C RESISTOR	100K 5% 1/4W	
	R 663	QRD161J-124	C RESISTOR	120K 5% 1/4W	
	R 664	QRD161J-471	C RESISTOR	470 5% 1/4W	
	R 666	QRD161J-220	C RESISTOR	22 5% 1/4W	
	R 671	QRD161J-102	C RESISTOR	1.0K 5% 1/4W	
	R 672	QRD161J-102	C RESISTOR	1.0K 5% 1/4W	

BLOCK NO. 01

⚠	REF.	PARTS NO.	PARTS NAME	REMARKS	SUFFIX
	R 901	QRD161J-472	C RESISTOR	4.7K 5% 1/4W	
	R 902	QRD161J-563	C RESISTOR	56K 5% 1/4W	
	R 903	QRD161J-101	C RESISTOR	100 5% 1/4W	
	R 904	QRD161J-821	C RESISTOR	820 5% 1/4W	
	R 906	QRD161J-563	C RESISTOR	56K 5% 1/4W	
	R 907	QRD161J-102	C RESISTOR	1.0K 5% 1/4W	
	R 908	QRD167J-332	C RESISTOR	3.3K 5% 1/4W	
	R 909	QRD161J-102	C RESISTOR	1.0K 5% 1/4W	
	R 910	QRD161J-104	C RESISTOR	100K 5% 1/4W	
	R 911	QRD161J-472	C RESISTOR	4.7K 5% 1/4W	
	R 912	QRD161J-102	C RESISTOR	1.0K 5% 1/4W	
	R 913	QRD167J-562	C RESISTOR	5.6K 5% 1/4W	
	R 914	QRZ0077-4R7X	F RESISTOR	4.7 1/0W	
	R 915	QRD161J-101	C RESISTOR	100 5% 1/4W	
	R 916	QRD161J-821	C RESISTOR	820 5% 1/4W	
	R 917	QRD161J-220	C RESISTOR	22 5% 1/4W	
	R 919	QRD161J-563	C RESISTOR	56K 5% 1/4W	
	R 920	QRD161J-472	C RESISTOR	4.7K 5% 1/4W	
	R 922	QRE141J-103Y	C RESISTOR	10K 5% 1/4W	
	R 999	QRD161J-331	C RESISTOR	330 5% 1/4W	
	RM 1	QRD161J-222	C RESISTOR	2.2K 5% 1/4W	U,US,UX,UY,UT
	RM 2	QRD167J-682	C RESISTOR	6.8K 5% 1/4W	U,US,UX,UY,UT
	RM 4	QRD161J-820	C RESISTOR	82 5% 1/4W	U,US,UX,UY,UT
	RM 5	QRD161J-564	C RESISTOR	560K 5% 1/4W	U,US,UX,UY,UT
	RM 6	QRD167J-332	C RESISTOR	3.3K 5% 1/4W	U,US,UX,UY,UT
	RM 7	QRD161J-681	C RESISTOR	680 5% 1/4W	U,US,UX,UY,UT
	RM 8	QRD161J-472	C RESISTOR	4.7K 5% 1/4W	U,US,UX,UY,UT
	RM 9	QRD161J-563	C RESISTOR	56K 5% 1/4W	U,US,UX,UY,UT
	RM 10	QRD161J-202	C RESISTOR	2.0K 5% 1/4W	U,US,UX,UY,UT
	S 303	SK-23E01-G9	SLIDE SWITCH	BEAT CUT SW(TKR	
⚠	S 901	QSW0555-001	SLIDE SWITCH		U,US,UX,UY,UT
	T 2	VQT7A21-112	IFT		
	T 301	OH-812320	BIAS OSC COIL		
	TC 2	QAT3114-200Z	T CAPACITOR	MW RF	
	TP 2	VMZ0015-002	PIN SOCKET	GND	
	X 1	QAX0402-001	CRYSTAL		
	X 651	CSA16.93MXZ040T	CERA LOCK	16.9344MHZ	
	ZD302	UZ4.3BSB-T2	ZENER DIODE		
	ZD903	MTZ6.2JB	ZENER DIODE		
	ZD904	MTZ5.6JB	ZENER DIODE		
	ZD905	MTZJ7.5C-T2	ZENER DIODE		

System CPU Board for RC-QN3

BLOCK NO. 02

⚠	REF.	PARTS NO.	PARTS NAME	REMARKS	SUFFIX
	C 702	NCS21HJ-240	C CAPACITOR	24PF 5% 50V	
	C 703	NCS21HJ-360AY	C CAPACITOR	36PF 5% 50V	
	C 704	NCS21HJ-360AY	C CAPACITOR	36PF 5% 50V	
	C 705	NCS21HJ-240	C CAPACITOR	24PF 5% 50V	
	C 706	NCB21HK-102AY	C CAPACITOR	1000PF 10% 50V	
	C 707	NCF21EZ-104AYU	C CAPACITOR	.10MF +80:-20%	
	C 708	QET41AM-227	E CAPACITOR	220MF 20% 10V	
	C 709	QETBOJM-228	E CAPACITOR	2200MF 20% 6.3V	
	C 710	NCB21HK-103AY	C CAPACITOR	.010MF 10% 25V	
	C 711	QER41CM-106	E CAPACITOR	10MF 20% 16V	
	C 712	QER41HM-225	E CAPACITOR	2.2MF 20% 50V	
	C 714	NCS21HJ-151X	C CAPACITOR	150PF 5% 50V	
	C 716	NCS21HJ-151X	C CAPACITOR	150PF 5% 50V	
	C 717	NCS21HJ-220AY	C CAPACITOR	22PF 5% 50V	
	C 718	NCS21HJ-270AY	C.CAPACITOR	27PF 5% 50V	
	C 719	NCB21HK-102AY	C CAPACITOR	1000PF 10% 50V	
	C 720	NCB21HK-102AY	C CAPACITOR	1000PF 10% 50V	
	C 721	NCB21HK-103AY	C CAPACITOR	.010MF 10% 25V	
	C 722	NCS21HJ-101AY	C CAPACITOR	100PF 5% 50V	
	C 723	NCS21HJ-101AY	C CAPACITOR	100PF 5% 50V	
	C 724	NCS21HJ-101AY	C CAPACITOR	100PF 5% 50V	
	C 725	NCS21HJ-101AY	C CAPACITOR	100PF 5% 50V	
	C 727	QET41AM-476	E CAPACITOR	REMOCON	
	C 732	NCF21EZ-104AYU	C CAPACITOR	.10MF +80:-20%	
	C 738	NCS21HJ-151X	C CAPACITOR	150PF 5% 50V	
	C 801	NCB21HK-103AY	C CAPACITOR	.010MF 10% 25V	
	C 802	NCB21HK-103AY	C CAPACITOR	.010MF 10% 25V	
	CN701	QGF1212F1-17	FFC/FPC CONNE	CTL(TO MAIN)	
	CN703	QGF1212F1-13	FFC/FPC CONNE	CTL(TO MAIN)	
	CN704	EMV5133-002K	CONNECTOR	CTL(TO DOOR SW)	
	D 702	1SS133-T2	DIODE		
	D 703	UZ5.1BSC-T2	ZENER DIODE		
	D 704	1SS133-T2	DIODE		
	D 706	1SS133-T2	DIODE		
	D 707	1SS133-T2	DIODE		
	D 708	1SS133-T2	DIODE		
	D 851	LT0311G-41	LED GREEN STAND	POWER LED	
	D 852	LT0321-41	ON LED RTP	STANBY LED	
	DI701	QLD0045-001	LCD	LCD DISPLAY	
	IC701	MN171603JACA	IC	KEY HAI HENKOU	
	IC703	GP1U281X	IR DETECT UNIT	REMOCO	
	JS801	QSW0706-001	ROTARY ENCODER		
	K 701	VQZ0048-009	INDUCTOR		
	K 702	VQZ0048-009	INDUCTOR		
	K 703	VQZ0048-009	INDUCTOR		
	L 701	3A839N	INDUCTOR		
	L 702	3A839N	INDUCTOR		
	PL701	QLL0051-001	LAMP	LIGHT GREEN	
	Q 701	2SC2714/O/-X	TRANSISTOR		
	Q 702	2SC2714/O/-X	TRANSISTOR		
	Q 703	2SC2412K/R/-X	TRANSISTOR		
	Q 704	DTC144EKA-X	TRANSISTOR		
	Q 705	2SA1037AKT146	CHIP TRANSISTOR		
	Q 706	DTC143TKA-X	DIGI TRANSISTOR		
	Q 709	2SC2412K/R/-X	TRANSISTOR		

BLOCK NO. 02

⚠	REF.	PARTS NO.	PARTS NAME	REMARKS	SUFFIX
	Q 851	2SA1037AKT146	CHIP TRANSISTOR	POWER	
	Q 852	2SC2412K/R/-X	TRANSISTOR		
	R 701	NRSA02J-102NY	MG RESISTOR	1.0K 5% 1/10W	
	R 702	NRSA02J-822NY	MG RESISTOR	8.2K 5% 1/10W	
	R 703	NRSA02J-822NY	MG RESISTOR	8.2K 5% 1/10W	
	R 704	NRSA02J-102NY	MG RESISTOR	1.0K 5% 1/10W	
	R 706	NRSA02J-103NY	MG RESISTOR	10K 5% 1/10W	
	R 707	NRSA02J-103NY	MG RESISTOR	10K 5% 1/10W	
	R 708	NRSA02J-103NY	MG RESISTOR	10K 5% 1/10W	
	R 709	NRSA02J-223NY	MG RESISTOR	22K 5% 1/10W	
	R 710	NRSA02J-104X	MG RESISTOR	100K 5% 1/10W	
	R 711	NRSA02J-223NY	MG RESISTOR	22K 5% 1/10W	
	R 712	NRSA02J-103NY	MG RESISTOR	10K 5% 1/10W	
	R 713	NRSA02J-103NY	MG RESISTOR	10K 5% 1/10W	
	R 714	NRSA02J-393NY	MG RESISTOR	39K 5% 1/10W	
	R 715	NRSA02J-333NY	MG RESISTOR	33K 5% 1/10W	
	R 716	NRSA02J-473NY	MG RESISTOR	47K 5% 1/10W	
	R 717	NRSA02J-333NY	MG RESISTOR	33K 5% 1/10W	
	R 718	NRSA02J-103NY	MG RESISTOR	10K 5% 1/10W	
	R 719	NRSA02J-104X	MG RESISTOR	100K 5% 1/10W	
	R 720	NRSA02J-104X	MG RESISTOR	100K 5% 1/10W	
	R 721	NRSA02J-222NY	MG RESISTOR	2.2K 5% 1/10W	
	R 722	NRSA02J-104X	MG RESISTOR	100K 5% 1/10W	
	R 723	NRSA02J-103NY	MG RESISTOR	10K 5% 1/10W	
	R 724	NRSA02J-222NY	MG RESISTOR	10K NG	
	R 725	NRSA02J-222NY	MG RESISTOR	10K NG	
	R 726	NRSA02J-222NY	MG RESISTOR	10K NG	
	R 727	NRSA02J-222NY	MG RESISTOR	10K NG	
	R 728	NRSA02J-103NY	MG RESISTOR	10K 5% 1/10W	
	R 729	NRSA02J-473NY	MG RESISTOR	47K 5% 1/10W	
	R 730	NRSA02J-103NY	MG RESISTOR	10K 5% 1/10W	
	R 731	NRSA02J-102NY	MG RESISTOR	1.0K 5% 1/10W	
	R 732	NRSA02J-104X	MG RESISTOR	100K 5% 1/10W	
	R 733	NRSA02J-104X	MG RESISTOR	100K 5% 1/10W	
	R 734	NRSA02J-104X	MG RESISTOR	100K 5% 1/10W	
	R 735	NRSA02J-103NY	MG RESISTOR	10K 5% 1/10W	
	R 736	NRSA02J-103NY	MG RESISTOR	10K 5% 1/10W	
	R 737	NRSA02J-103NY	MG RESISTOR	10K 5% 1/10W	
	R 739	NRSA02J-223NY	MG RESISTOR	22K 5% 1/10W	
	R 740	NRSA02J-103NY	MG RESISTOR	10K 5% 1/10W	
	R 742	NRSA02J-222NY	MG RESISTOR	2.2K 5% 1/10W	
	R 746	NRSA02J-223NY	MG RESISTOR	22K 5% 1/10W	
	R 748	NRSA02J-223NY	MG RESISTOR	REMOCON	
	R 749	NRSA02J-473NY	MG RESISTOR	47K 5% 1/10W	
	R 750	NRSA02J-103NY	MG RESISTOR	10K 5% 1/10W	
	R 751	NRSA02J-103NY	MG RESISTOR	10K 5% 1/10W	
	R 752	NRSA02J-103NY	MG RESISTOR	10K 5% 1/10W	
	R 753	NRSA02J-222NY	MG RESISTOR	2.2K 5% 1/10W	
	R 754	NRSA02J-103NY	MG RESISTOR	10K 5% 1/10W	
	R 755	NRSA02J-103NY	MG RESISTOR	REST	
	R 756	NRSA02J-223NY	MG RESISTOR	22K 5% 1/10W	
	R 758	NRSA02J-222NY	MG RESISTOR	2.2K 5% 1/10W	
	R 759	NRSA02J-102NY	MG RESISTOR	1.0K 5% 1/10W	
	R 760	NRSA02J-102NY	MG RESISTOR	1.0K 5% 1/10W	
	R 761	NRSA02J-222NY	MG RESISTOR	2.2K 5% 1/10W	

BLOCK NO. 02

⚠	REF.	PARTS NO.	PARTS NAME	REMARKS	SUFFIX
	R 762	NRSA02J-222NY	MG RESISTOR	2.2K 5% 1/10W	
	R 763	NRSA02J-222NY	MG RESISTOR	2.2K 5% 1/10W	
	R 767	NRSA02J-472NY	MG RESISTOR	4.7K 5% 1/10W	
	R 768	NRSA02J-103NY	MG RESISTOR	10K 5% 1/10W	
	R 769	NRSA02J-103NY	MG RESISTOR	10K 5% 1/10W	
	R 770	NRSA02J-222NY	MG RESISTOR	2.2K 5% 1/10W	
	R 772	NRSA02J-102NY	MG RESISTOR	1.0K 5% 1/10W	
	R 773	NRSA02J-103NY	MG RESISTOR	10K 5% 1/10W	
	R 774	NRSA02J-102NY	MG RESISTOR	1.0K 5% 1/10W	
	R 775	NRSA02J-102NY	MG RESISTOR	1.0K 5% 1/10W	
	R 776	NRSA02J-102NY	MG RESISTOR	1.0K 5% 1/10W	
	R 777	NRSA02J-102NY	MG RESISTOR	1.0K 5% 1/10W	
	R 778	NRSA02J-102NY	MG RESISTOR	1.0K 5% 1/10W	
	R 779	NRSA02J-102NY	MG RESISTOR	1.0K 5% 1/10W	
	R 785	NRSA02J-222NY	MG RESISTOR	2.2K 5% 1/10W	J,UY
	R 785	NRSA02J-822NY	MG RESISTOR	8.2K 5% 1/10W	U,US,UX,UT
	R 785	NRSA02J-223NY	MG RESISTOR	22K 5% 1/10W	B,E,EN
	R 789	NRSA02J-103NY	MG RESISTOR	10K 5% 1/10W	U,US,UX,UY,UT
	R 789	NRSA02J-103NY	MG RESISTOR	10K 5% 1/10W	B,E,EN
	R 790	NRSA02J-472NY	MG RESISTOR	4.7K 5% 1/10W	
	R 796	NRSA02J-104X	MG RESISTOR	FOR Q705	
	R 797	NRSA02J-472NY	MG RESISTOR	4.7K 5% 1/10W	
	R 851	NRSA02J-152X	MG RESISTOR	1.5K 5% 1/10W	
	R 852	NRSA02J-182NY	MG RESISTOR	1.8K 5% 1/10W	
	R 853	NRSA02J-272NY	MG RESISTOR	2.7K 5% 1/10W	
	R 854	NRSA02J-392NY	MG RESISTOR	3.9K 5% 1/10W	
	R 855	NRSA02J-682X	MG RESISTOR	6.8K 5% 1/10W	
	R 856	NRSA02J-123NY	MG RESISTOR	12K 5% 1/10W	
	R 857	NRSA02J-393NY	MG RESISTOR	39K 5% 1/10W	
	R 858	NRSA02J-562NY	MG RESISTOR	5.6K 5% 1/10W	
	R 859	NRSA02J-183NY	MG RESISTOR	18K 5% 1/10W	
	R 860	NRSA02J-331NY	MG RESISTOR	330 5% 1/10W	
	R 861	NRSA02J-681NY	MG RESISTOR	680 5% 1/10W	
	R 862	NRSA02J-103NY	MG RESISTOR	10K 5% 1/10W	
	R 863	NRSA02J-103NY	MG RESISTOR	10K 5% 1/10W	
	R 864	NRSA02J-562NY	MG RESISTOR	5.6K 5% 1/10W	
	R 865	NRSA02J-222NY	MG RESISTOR	2.2K 5% 1/10W	
	S 851	QSW0707-001Z	TACT SWITCH	SOUND	
	S 852	QSW0707-001Z	TACT SWITCH	BASS	
	S 853	QSW0707-001Z	TACT SWITCH	DOWN	
	S 854	QSW0707-001Z	TACT SWITCH	TUNER	
	S 855	QSW0707-001Z	TACT SWITCH	STOP	
	S 856	QSW0707-001Z	TACT SWITCH	CD	
	S 857	QSW0707-001Z	TACT SWITCH	UP	
	S 858	QSW0707-001Z	TACT SWITCH	CLOCK/TIMER	
	S 865	QSW0707-001Z	TACT SWITCH	POWER	
	S 866	PS-22F23-A3.3NS	PUSH SWITCH	CD OPEN/CLOSE	
	X 701	QAX0410-001Z	CERA LOCK		
	X 702	QAX0401-001	CRYSTAL		

Packing Materials and Accessories List

Block No. M 4 M M
Block No. M 5 M M

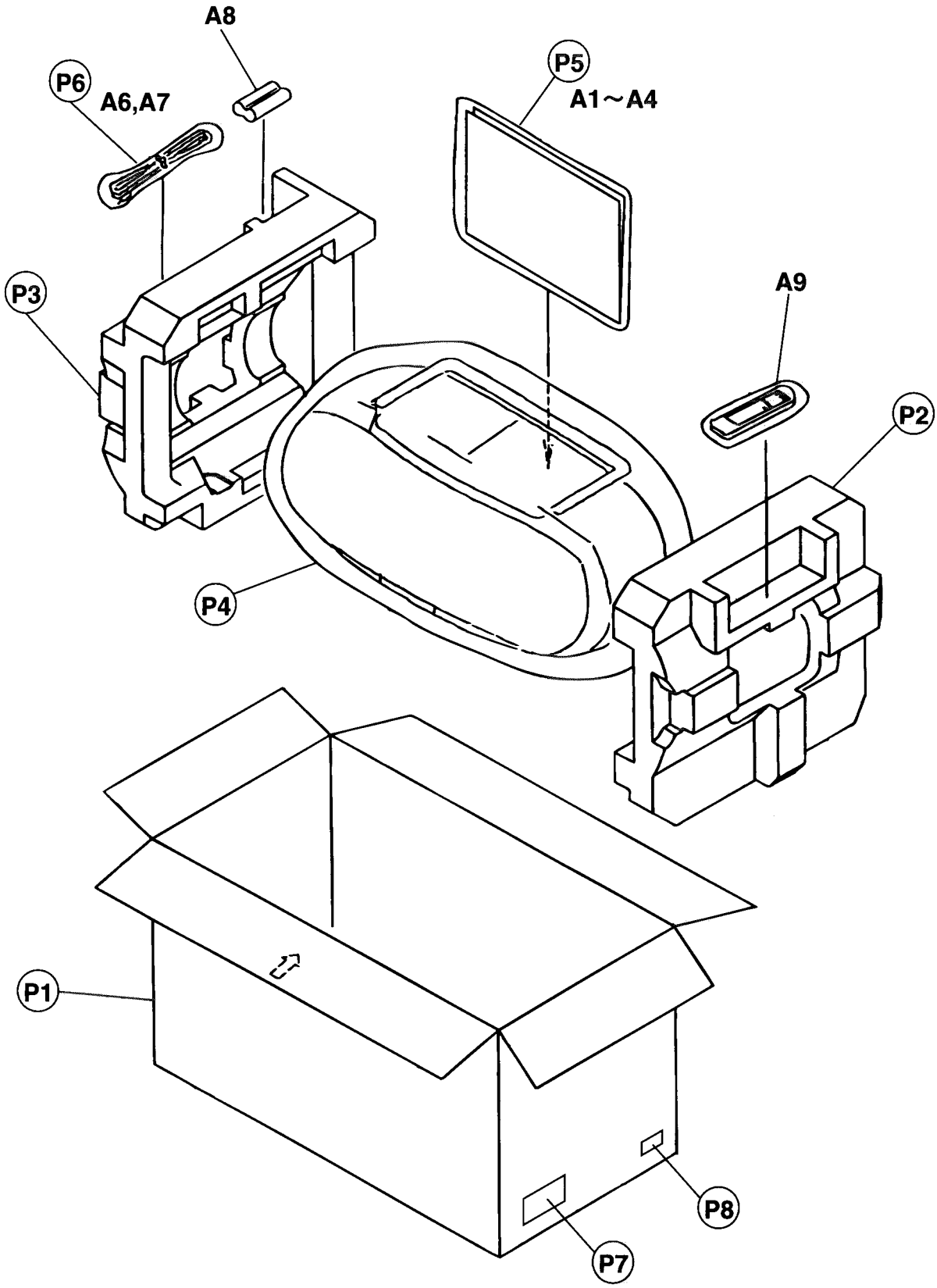

BLOCK NO. M4MM

⚠	REF.	PARTS NO.	PARTS NAME	REMARKS	QTY	SUFFIX	CLR
	P 1	LV30187-002A	CARTON		1	B,E,EN	
		LV30187-001A	CARTON		1	J	
		LV30187-002A	CARTON		1	UY,UT	
		LV30187-002A	CARTON		1	U,US,UX	
	P 2	LV10052-001A	CUSHION(L)		1		
	P 3	LV10053-001A	CUSHION(R)		1		
	P 4	VPE3026-009	POLY BAG	SET	1		
	P 5	VPE3005-001	POLY BAG	INSTRUCTIONS	1		
	P 6	QPA01202505	POLY BAG	POWER CORD	1	E,EN,J	
		QPA01202505	POLY BAG	POWER CORD	1	U,US,UX	
		QPA01202505	POLY BAG	POWER CORD	1	UY,UT	
		QPGA015-03503	POLY BAG	POWER CORD	1	B	
	P 7	----------	CARTON LABEL		1		
	P 8	----------	UY LABEL		1	UY	
		----------	UT LABEL		1	UT	

BLOCK NO. M5MM

⚠	REF.	PARTS NO.	PARTS NAME	REMARKS	QTY	SUFFIX	CLR
	A 1	LVT0050-003A	INSTRUCTIONS		1	E	
		LVT0050-005A	INSTRUCTIONS		1	EN	
		LVT0050-007A	INSTRUCTIONS		1	U,US,UX	
		LVT0050-007A	INSTRUCTIONS		1	UY,UT	
		LVT0050-009A	INSTRUCTIONS		1	UX	
		LVT0050-002A	INSTRUCTIONS		1	B	
		LVT0050-001A	INSTRUCTIONS		1	J	
	A 2	BT-20044G	SAFETY INST		1	J	
		E43486-340B	SAFETY INST		1	B	
	A 3	BT-51009-3	WARRANTY CARD		1	J	
		BT-52001-4	WARRANTY CARD		1	J	
		BT-54008-1	WARRANTY CARD		1	B,E,EN	
	A 4	BT-20071B	SVC CENTER LIST		1	J	
		BT-20137	SVC CENTER LIST		1	J	
⚠	A 6	QMP1F00-183	POWER CORD		1	J	
⚠		QMP7350-150	POWER CORD		1	UX,UT	
⚠		QMPS050-183-JC	POWER CORD		1	UY	
⚠		QMP39F0-183	POWER CORD		1	E,EN,U,US	
⚠		QMP5520-183BS	POWER CORD		1	B	
⚠	A 7	ENZ2202-001	SIEMENG PLUG		1	U,US	
⚠		ENZ2203-001	SIEMENG PLUG		1	UX,UT	
	A 8	UM-3(DV)-2PSA	BATTERY		1	B,E,EN	
		UM-3(DV)-2PSA	BATTERY		1	U,US,UX	
	A 9	UM-3(DV)-2PSA	BATTERY		1	UY,UT	
		RM-RXQN3	REMOCON UNIT		1	J	
		RM-RXQN3E	REMOCON UNIT		1	B,E,EN	
		RM-RXQN3E	REMOCON UNIT		1	U,US,UX	
		RM-RXQN3E	REMOCON UNIT		1	UY,UT	

JVC
VICTOR COMPANY OF JAPAN, LIMITED
AUDIO DIVISION,10-1,1-Chome,Ohwatari-machi,Maebashi-city, 371-8543,Japan

(No.20697)

Printed in Japan
9809(V)