JVC

SERVICE MANUAL

DOUBLE CASSETTE DECK

TD-W717TN C/J
TD-W718BK A/B/E/EN/G/U/UT

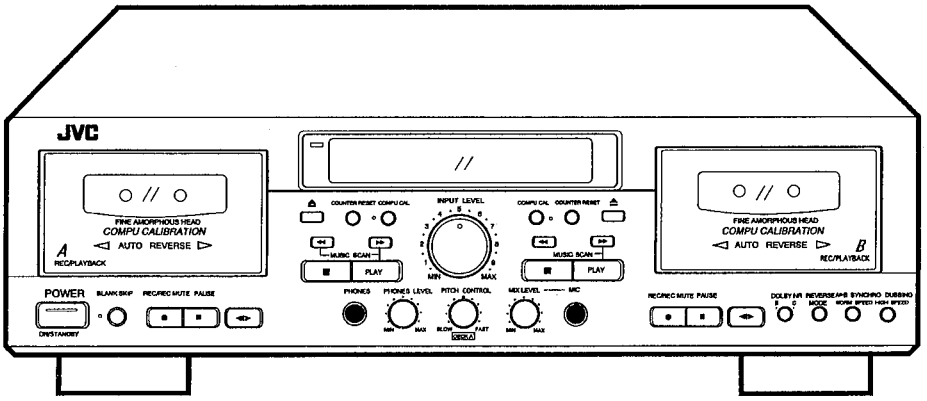

COMPU LINK
Component

Area Suffix	
A	Australia
B	U.K.
C	Canada
E	Continental europe
EN	North Europe
G	Germany
J	U.S.A.
U	Other Areas
UT	Taiwan

Contents

■ .Safety Precautions ····· Page2
■ .Features/Specifications ····· 4
■ .Instructions ····· 5
1.Location of Main Parts ····· 12
2.Removal of Main Parts ····· 13
3.Main Adjustment ····· 18
4.Wiring Connections ····· 23
5.Block Diagram ····· 24
6.Standard Schematic Diagrams ····· 25
7.Location of P.C.Board parts and Parts List ····· 30
8.Exploded View of Enclosure Component Parts and Parts List ····· 40
9.Exploded View of Mechanism Component Parts and Parts List ····· 42
10.Packing Illusration and Parts List ····· 43

No. 4358
June 1995

Safety Precautios

1. The design this product contains special hardware and many circuits and components specially for safety purposes. For continued protection, no changes should be made to the original design unless authorized in writing by the manufacturer. Replacement parts must be identical to those used in the original circuits. Service should be performed by qualified personnel only.
2. Alterations of the design or circuitry of the product should not be made. Any design alterations of the product should not be made. Any design alterations or additions will void the manufacture's warranty and will further relieve the manufacture of responsibility for personal injury or property damage resulting therefrom.
3. Many electrical and mechanical parts in the product have special safety — related characteristics. These characteristics are often not evident from visual inspection nor can the protection afforded by them necessarily be obtained by using replacement components rated for higher voltage, wattage, etc. Replacement parts which have these special safety characteristics are identified in the parts list of service manual. Electrical components having such features are identified by shading and(⚠)on the schematic diagram and by (⚠) on the parts list in the service manual. The use of a substitute replacement which does not have the same safety characteristics as the recommended replacement part shown in the parts list of service manual may create shock, fire, or other hazards.
4. The leads in the products are routed and dressed with ties, clamps , tubings, barriers and the like to be separated from live parts, high temperature parts, moving parts and or sharp edges for the prevention of electric shock and fire hazard. When service is required, the original lead routing and dress should be observed, and it should be confirmed that they have been returned to normal, after reassembling.
5. Leakage current check (Electrical shock hazard testing)

   After re — assembling the product, always perform an isolation check on the exposed metal parts of the product (antenna terminals, knobs, metal cabinet, screw heads, headphone jack, control shafts, etc.) to be sure the product is safe to operate without danger of electrical shock. Do not use a line isolation transformer during this check.

   - Plug the AC line cord directly into the AC outlet. using a"Leakage current tester", measure the leakage current from each exposed metal part of the cabinet, particulary any exposed metal part having a return path to the chassis, to a known good earth ground. Any leakage current must not exposeed 0.5mA AC(r.m.s.)
   - Alternate check method

     Plug the AC line cord directly into the AC outlet. Use an AC voltmeter having 1,000 ohms per volt or more sensitivity in the following manner. Connect a 1,500 ohms 10W resistor paralleled by a 0.15 μ F AC type capacitor between an exposed metal part and a known good earth ground. Measure the AC voltage across the resistor with the AC voltmeter. Move the resistor connection to each exposed metal part, particularly any exposed metal part having a return path to the chassis, and measure the AC voltage across the resistor. Now, reverse the plug in the AC outlet and repeat each measurement. Any voltage measured must not exceed 0.75V AC(r.m.s.).This corresponds to 0.5mA AC(r.m.s.).

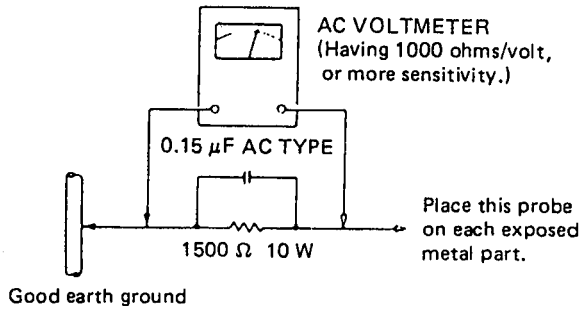

◆ Warning (UK only)

1. This equipment has been designed and manufactured to meet international safety standards.
2. It is the legal responsibility of the repairer to ensure that these safety standards are maintaintained.
3. Repairs must be made in accordance with the relevant safety standards.
4. It is essential that safety critical components are replaced by approved parts.
5. If mains voltage selector is provided, check setting for local voltage.

◆ Important Management Points Regading Safety
(Items Demanding Special Safety Precautions)

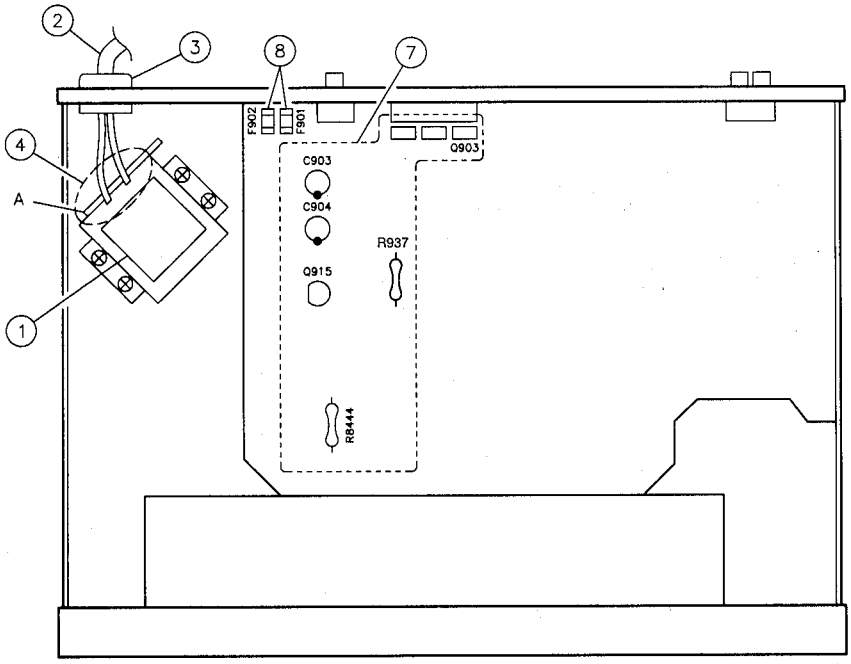

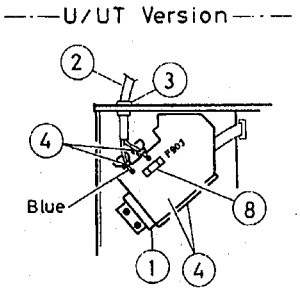

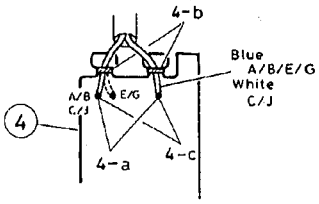

1.Securely fix the power transformer while confirming its marking specified in the following.

Suffix	Marking	Description	Model
J	5216508	UL approved No.	TD-W717
C	VTP52A5-021F		TD-W717
A/B/E/EN/G	VTP52Z5-021F		TD-W718
U/UT	VTP52G5-021F		TD-W718

2.Power cord : Make sure of the following markings and inspect exterior scratch anddamage.

	Power cord	Attachment plug
J	SPT-1	KP-10W or SU-1P
C	SPT-1	KP-10W or SU-1P
E/EN/G	◁VDE▷	KP-419C or SE-1
B	BASEC BS6500	KP-610 3A
U/UT	◁VDE▷	KP-8H
A	LTSA-2F	KP-560

3. Install the cord bushing by the specified tool while confirming the marking. Bushing : NIFCO 2271

4. Wiring terminal

a)When installing the power cord,wind it around the terminal by the end before soldering.

b)Arrange the wires while binding them nearby the terminal.

c)The end of respective power cords is solderedin the air and the space from others must be3.2 mm or more in the distance.

7. Since the following parts are hear generation ones, they must no contact with electolytic capacitors, wires, etc.

● Following parts are inflammables,Make sure of their lift – up condition for the purpose.

● Parts in box ☐ must be controlled.

R901, R902, R921, R923, R937, R938, R940, R941, R755, R1403, R2403, R1453, R2453, R8432, R8482, R8441, R8444, R8491, R8494, Q901, Q903, Q905, Q909, Q912, Q915, Q8431, Q8481, D901, D902, D903, D904, D909, D910, C914, R945

Other parts

C903 C904 3300μF/25V C/J virsion (VENT TYPE)

8. All fuses must securely be connected.In A/B/E/EN/G/U/UT version, F901 and F902 must be specified by the rating of 800 mA shown on the surface as well as by themarking of Ⓢ or in U/UT version, F903 must be specified by the rating of 315 mA shown on the surface well as by the marking Ⓢ or ♡.

JVC

INSTRUCTIONS

TD-W7SD/W717/W718 A/B/J

DOUBLE CASSETTE DECK

COMPU LINK Component

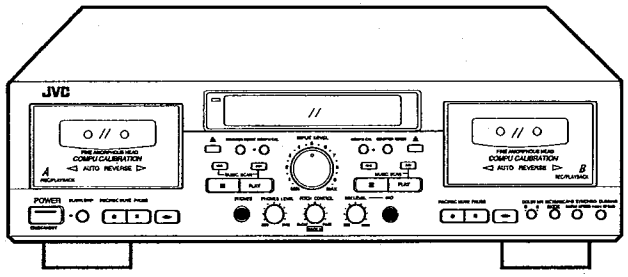

TD-W7SD

For Customer Use:
Enter below the Model No. and Serial No. which are located on the rear of the cabinet. Retain this information for future reference.

Model No. _____

Serial No. _____

TROUBLESHOOTING

What appears to be trouble is not always real trouble. Make sure first....

1. **Cassette cannot be loaded.**
   - Is the cassette positioned correctly?
2. **When PLAY button is pressed, tape does not move.**
   - Is the tape too loosely wound?
3. **Tape runs, but no sound is heard.**
   - Are all connections properly and securely made?
   - Is the MONITOR switch of the stereo amplifier set to the TAPE position?
   - Is the VOLUME control of the stereo amplifier set to MIN?
4. **Sound quality is poor.**
   - Is the DOLBY NR switch set to the right position?
   - Is the head section dirty?
   - Is the record/playback head magnetized?
   - Is the tape worn out?
5. **Recording cannot be performed.**
   - Are the safety tabs of cassette tape broken?
   - Are all connections properly and securely made?
   - Is the head section dirty?
6. **Previous recording is not completely erased.**
   - Is the erase head dirty?
7. **Since tape speed is irregular, wow and flutter occur.**
   - Is the pinch roller or capstan dirty?
   - Is the tape rewound too tight?
8. **MUSIC SCAN operation does not function properly.**
   - Are the non-recorded sections too short (3 sec. or less), or do they contain high level noise or hum?
9. **The BLANK SKIP indicator is lit yet the BLANK SKIP operation does not function properly.**
   - Is the other deck operating MUSIC SCAN? BLANK SKIP operation begins after MUSIC SCAN has finished.

SPECIFICATIONS

Type	: Double cassette deck
Track system	: 4-track, 2-channel
Tape speed	: 4.8 cm/sec (1-7/8 inch/sec) (Normal) 9.5 cm/sec (3-3/4 inch/sec) (High)
Frequency response	: (-20 dB recording)
(TD-W7SD)	: Type IV tape ; 10 - 20,000 Hz 20 - 19,000 Hz (±3dB) Type II tape ; 10 - 19,000 Hz 20 - 17,000 Hz (±3dB) Type I tape ; 10 - 19,000 Hz 20 - 17,000 Hz (±3dB)
(TD-W717/718)	: Type IV tape ; 20 - 17,000 Hz 30 - 16,000 Hz (±3dB) Type II tape ; 20 - 16,000 Hz 30 - 15,000 Hz (±3dB) Type I tape ; 20 - 16,000 Hz 30 - 15,000 Hz (±3dB)
S/N ratio	: 58 dB (S = 315 Hz, k3 = 3%, N = A-weighted, Type IV tape) The S/N is improved by about 15 dB at 500 Hz and by max. 20 dB at 1 kHz - 10 kHz with Dolby C NR on and improved by 5 dB at 1 kHz and by 10 dB at above 5 kHz with DOLBY B NR on.
Improvement of MOL	: 4 dB at 10 kHz with Dolby C NR on.
Wow and flutter	: 0.08% (WRMS), ±0.2% (DIN/IEC)
Channel separation	: 40 dB (1 kHz)
Crosstalk	: 60 dB (1 kHz)
Harmonic distortion	
(TD-W7SD)	: k3; 0.5% (Type IV tape, 315 Hz, 0 VU)
(TD-W717/718)	: k3; 0.8% (Type IV tape, 315 Hz, 0 VU)
Heads	
(TD-W7SD)	: AMORPHOUS head for record/playback, 2-gap ferrite head for erasure; combination head x 1 (For both decks A and B)
(TD-W717/718)	: METAPERM head for record/playback, 2-gap ferrite head for erasure; combination head x 1 (For both decks A and B)
Motors	: Electric governed DC motor for capstan x 1 DC motor for reel x 1 DC motor for mechanism drive x 1 (For both decks A and B)
Fast forward/rewind time	: Approx. 110 sec. with C-60 cassette
Input terminals	
LINE IN (x1 circuit)	: Input sensitivity; 80 mV (0 VU) Input impedance; 50 kΩ
MIC x 1 (Monaural)	: Input sensitivity; 0.4m V (-68dBV) Matching impedance; 600 - 10 kΩ
Output terminals	
LINE OUT (x 1 circuit)	: Output level; 300 mV (0 VU) Output impedance; 5 kΩ
PHONES x 1	: Output level; 0 - 1 mW/8 Ω (0 VU) Matching impedance 8 Ω - 1 kΩ
Other terminals	: COMPU LINK-3/SYNCHRO x 2
Power requirement	: AC 240 V, 50 Hz (Australia) AC 230 V, 50 Hz (U.K.) AC 120 V, 60 Hz (U.S.A.)
Power consumption	: With power switch on 23 W With power switch standby 4.0 W
Dimensions (W x H x D)	: 435 x 134 x 331 mm (17-3/16" x 5-5/16" x 13-1/16")
Weight	: 4.9 kg (10.9 lbs.)
Accessories	: Pin plug cord ..... 2 Remote cable 1

Design and specifications are subject to change without notice.

CAUTION
RISK OF ELECTRIC SHOCK
DO NOT OPEN

CAUTION "TO REDUCE THE RISK OF ELECTRIC SHOCK
DO NOT REMOVE COVER (OR BACK)
NO USER SERVICEABLE PARTS INSIDE
REFER SERVICING TO QUALIFIED SERVICE PERSONNEL."

The lightning flash with arrowhead symbol, within an equilateral triangle, is intended to alert the user to the presence of uninsulated "dangerous voltage" within the product's enclosure that may be of sufficient magnitude to constitute a risk of electric shock to persons.

The exclamation point within an equilateral triangle is intended to alert the user to the presence of important operating and maintenance (servicing) instructions in the literature accompanying the appliance.

WARNING:

TO REDUCE THE RISK OF FIRE OR ELECTRIC SHOCK, DO NOT EXPOSE THIS APPLIANCE TO RAIN OR MOISTURE.

IMPORTANT (In the United Kingdom)
Mains Supply (AC 230 V ~, 50 Hz only)

DO NOT cut off the mains plug from this equipment. If the plug fitted is not suitable for the power points in your home or the cable is too short to reach a power point, then obtain an appropriate safety approved extension lead or consult your dealer.

BE SURE to replace the fuse only with an identical approved type, as originally fitted and to replace the fuse cover.

If nonetheless the mains plug is cut off ensure to remove the fuse and dispose of the plug immediately, to avoid a possible shock hazard by inadvertent connection to the mains supply.

DO NOT make any connection to the terminal which is marked with the letter E or by the safety earth symbol or coloured green or green-and-yellow.

The wires in the mains lead on this product are coloured in accordance with the following code:

Blue to N
(Neutral) or Black
Brown to L
(Live) or Red

As these colours may not correspond with the coloured markings identifying the terminals in your plug proceed as follows:

The wire which is coloured blue must be connected to the terminal which is marked with the letter N or coloured black.

The wire which is coloured brown must be connected to the terminal which is marked with the letter L or coloured red.

IF IN DOUBT-CONSULT A COMPETENT ELECTRICIAN.

Please study this instruction manual carefully before starting to operate the unit, in order to use the unit correctly. We take no responsibility for any problems resulting from misuse of this unit by operating this equipment other than instructed in this manual.

WARNING (In the United Kingdom)
Pre-recorded tapes, records or discs should not be re-recorded without the consent of the owners of copyright in the sound recording and in any copyright musical or literary work embodied in that recording as this constitutes an infringement of copyright.

INFORMATION (FOR U.S.A.)

This equipment has been tested and found to comply with the limits for a Class B digital device, pursuant to Part 15 of the FCC Rules. These limits are designed to provide reasonable protection against harmful interference in a residential installation. This equipment generates, uses, and can radiate radio frequency energy and, if not installed and used in accordance with the instructions, may cause harmful interference to radio communications. However, there is no guarantee that interference will not occur in a particular installation. If this equipment does cause harmful interference to radio or television reception, which can be determined by turning the equipment off and on, the user is encouraged to try to correct the interference by one or more of the following measures:

- Reorient or relocate the receiving antenna.
- Increase the separation between the equipment and receiver.
- Connect the equipment into an outlet on a circuit different from that to which the receiver is connected.
- Consult the dealer or an experienced radio/TV technician for help.

INTRODUCTION

Thank you for purchasing a JVC product. Read this instruction book carefully before operating to be sure of getting optimum performance and longer service life from the unit.

CONTENTS

Features 2
Auto reverse operation 2
Cautions 2
Connections 4
Cassette loading 4
Names of parts and their functions 5
Playback 6
Recording 7
Compu link control system 11
Dubbing 12
Maintenance 13
Troubleshooting 14
Specifications 14

FEATURES

1. **Fine amorphous recording/playback heads (TD-W7SD)**
2. **Double auto-reverse mechanism for recording/playback in deck A and deck B**
3. **COMPU CAL function which automatically sets the flat characteristics and brings out maximum tape performance on both decks.**
4. **Full logic mechanism**
5. **Dolby* HX PRO headroom extension**
6. **Dolby B & C noise reduction system**
   - Built-in MPX filter
   - MPX filter linked with the Dolby NR ON/OFF function (TD-W7SD)
7. **DDRP (Dynamics Detection Recording Processor) compatibility**
   The DDRP function is possible only when used with a suitable JVC CD player.
8. **2-color FL peak level indicator**
9. **4-digit linear tape counter respectively for deck A and deck B**
10. **Synchro start (normal-/high-speed) dubbing**
11. **Auto tape select mechanism (decks A and B)**
12. **Multi music scan mechanism for either direction**
13. **Blank skip function**
14. **PITCH control (deck A)**
15. **Microphone mixing is possible**
16. **COMPU LINK-3 compatible**

The only difference between models TD-W717 and TD-W718 is cosmetic one.

* Dolby noise reduction and HX Pro headroom extension manufactured under license from Dolby Laboratories Licensing Corporation. HX Pro originated by Bang & Olufsen.
* "Dolby", the double-D symbol DD and "HX PRO" are trademarks of Dolby Laboratories Licensing Corporation.

COMPU LINK
Control System

COMPU LINK control system is the convenient system using COMPU LINK-3/SYNCHRO terminals on the rear panel. (See page 4 and 11.)

D·D·R·P
DYNAMICS DETECTION
RECORDING PROCESSOR

This product can be combinated with a DDRP (DYNAMICS DETECTION RECORDING PROCESSOR) system (compact disc player + cassette deck, etc.) to enable setting the optimum recording level automatically. Refer to these instructions for details.

AUTO REVERSE OPERATION

The auto reverse operation of this unit turns the tape transport over to the reverse of forward direction automatically when the tape reaches its end during recording or playback.

- Because of cassette shell construction, a tape recorded in the forward direction should be played back in the same direction to obtain stable sound reproduction.
- During recording, auto reverse can be activated only from the forward to the reverse direction. For good sound quality and to avoid accidental erasure of previously recorded material, always start recording with the side A of the tape facing out.

CAUTIONS

1. Prevention of Electric Shocks, Fire Hazards and Damage

1) Even when the POWER switch is set to STANDBY, a very small current will flow. To save power and for safety when not using the unit for an extended period of time, disconnect the power cord from the household AC outlet.
2) Do not handle the power cord with wet hands.
3) When unplugging from the wall outlet, always grasp and pull the plug, not the power cord.
4) Consult your nearest dealer when damage, disconnection, or contact failure is found with the cord.
5) Do not bend the cord sharply, or pull or twist it.
6) Do not modify the power cord in any manner.
7) Do not remove screws to disassemble the unit and do not touch anything inside the unit.
8) AC power cord **(For U.S.A. version only)**
   The AC power cord of this unit has certain one-way direction connections to prevent electric shock. Refer to the illustration for correct connection. (Fig. 1)

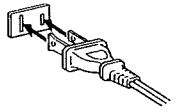

Fig. 1

9) Do not insert any metallic objects into the unit.
10) Unplug the power cord when there is a possibility of lightning.

TD-W717TN C/J
TD-W718BK A/B/E/EN/G/U/UT

(No. 4358) 5

11) If water gets inside the unit, unplug the power cord from the outlet and consult your dealer.
12) Do not block the ventilation holes of the unit so that heat can escape. Do not install the unit in a badly ventilated place.
13) Be sure to unplug the power cord from the outlet when going out or when the unit is not in use for an extended period of time.

2. Installation

1) Avoid placing the unit on or adjacent to an amplifier, to prevent hum from being produced by some types of amplifiers. Move the unit to a place not affected by the amplifier. Keep the unit as far as possible from a TV set.
2) Avoid installing the unit in a location subject to ambient temperatures exceeding 40 °C (104 °F) (e.g. direct sunlight, near heaters, etc.) or less than 0 °C (32 °F), excessive humidity, dust or vibrations.
3) If this set is moved suddenly from a cold place (0 °C) to a warm place, it may not function properly because of moisture generated inside the unit. The unit will function properly 30 minutes after being moved.

3. Cleaning the cabinet

Never use benzine or thinner for cabinet cleaning as they may damage the surface finish.

4. Cassette tape

1) Loose tape may become tangled in the tape transport mechanism. Remove slack by winding the tape with a pencil. (Fig. 2)

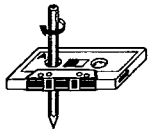

Fig. 2

Turn the pencil to tighten the tape.

2) The use of C-120 (120 minutes turn around) or thinner tape is not recommended, since characteristic deterioration may occur.
3) To prevent recordings from being erased accidentally, remove the tab(s) with a screwdriver. Reseal the slots with adhesive tape to erase and re-record after the tabs have been broken off.

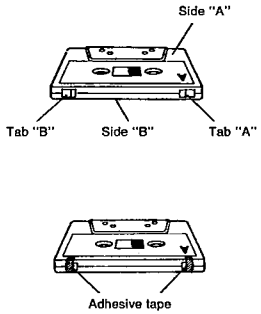

Fig. 3

4) Do not store cassette tapes where there is a magnetic field (e.g. near a TV, etc.) or in a place subject to high temperatures or humidity.

5. Auto tape select mechanism (decks A and B)

This deck has an Auto Tape Select mechanism which distinguishes between different types of tape from holes in the cassette. After the type of tape has been detected, bias and equalization are set to be suitable for the tape.

- Cassettes with the detection holes:

  Metal tape (EQ: 70μs) ..... Type IV
  CrO_2 (chrome) tape (EQ: 70μs) ..... Type II

- Cassettes without the detection holes:

  Normal tape (EQ: 120μs) ..... Type I

Some earlier types of metal and CrO_2 (chrome) tapes may not be provided with the detection holes. Avoid using such tapes, since correct equalization characteristics cannot be obtained. Also do not use ferrichrome tapes whose characteristics do not match this unit.

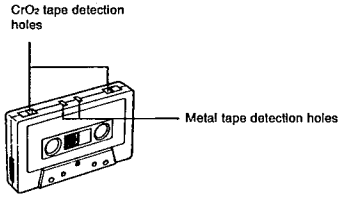

6. Operations

1) When the POWER switch is turned ON or off (STANDBY) with the deck set to the playback or recording mode, noise may be generated. Before turning the POWER switch ON or off (STANDBY), confirm that the ■ (stop) button has been pressed.
2) Many operations of this unit are performed under the control of a microcomputer. Use the unit only after carefully studying the descriptions and cautions in each item. If operations are done incorrectly, the unit may stop functioning correctly. If this happens, turn off the power once, and then turn it on again, so that the unit can function correctly.

CONNECTIONS

- Do not switch the power on until all the connections are completed.
- Insert the plugs firmly, or poor contact will result, causing noise.
- When the pin-plug cords are employed, always connect the white plug to the left channel terminal. This helps to avoid reversed connections.
- When using the Compu Link Control System version 3, do not connect the power cord to the SWITCHED AC OUTLET of an amplifier or receiver. Otherwise, the automatic power on/off (STANDBY) function cannot be carried out.

1. Connection to a stereo amplifier

Note:

When installing the deck, be sure to install at a distance from your amplifier. If they are stacked, noise (hum) may occur.

2. Remote cable connection for COMPU LINK

- By connecting a remote cable, COMPU LINK functions (automatic power on/off (STANDBY), automatic source selection, synchronized recording and DDRP recording) can be performed. In this time the provided pin-plug cords must be also connected.
- When making synchronized recording with a CD player, connect the remote cable to the COMPU LINK-3/SYNCHRO jacks.

Notes:

1. When making synchronized recordings, only a single deck should be connected to the amplifier.
2. If a component is not a JVC COMPU LINK component, bypass it when making the remote cable connections.
3. This deck can be connected with an amplifier and a CD player which have the COMPU LINK-1/SYNCHRO jacks for COMPU LINK performance. (See page 11 for details.)

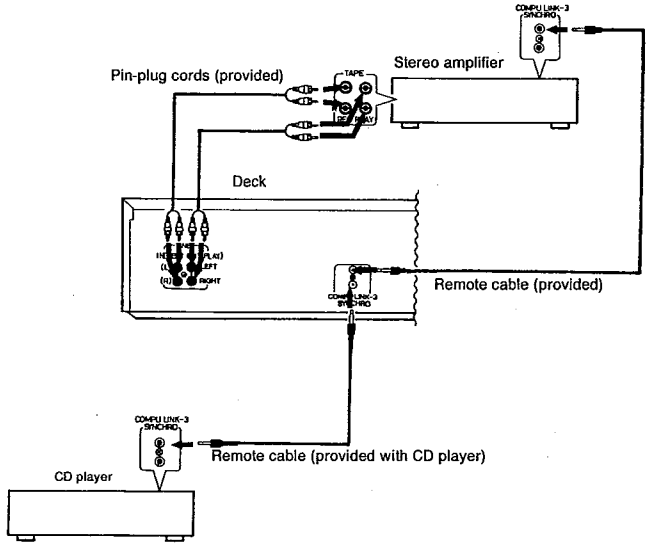

CASSETTE LOADING

1. Press the ⏏ (eject) button to open the cassette holder.
2. Load a cassette as shown.
3. Press the cassette holder to close it. Be sure to obtain the click sound to close the holder securely.

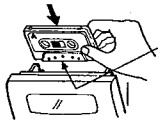

Load the cassette with the tape-exposed edge down.

NAMES OF PARTS AND THEIR FUNCTIONS

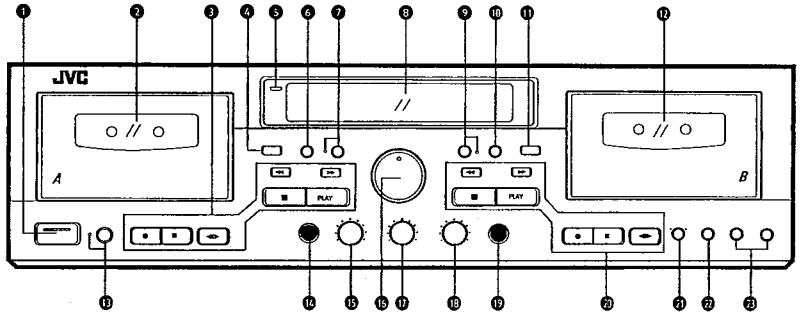

❶ **POWER switch (ON/STANDBY)**
❷ **Cassette holder (deck A)**
❸ **Cassette operation buttons (deck A)**

◀◀	: Press to wind the tape quickly from right to left. Press this button during playback to operate MUSIC SCAN.
▶▶	: Press to wind the tape quickly from left to right. Press this button during playback to operate MUSIC SCAN.
■ (stop)	: Press to stop the tape.
PLAY	: Press to start playback/recording.
● REC/REC MUTE	: Press the PLAY button while pressing this button to start recording, and press to leave an appropriate non-recorded section. (See page 10.)
❚❚ PAUSE	: Press to stop the tape temporarily during recording and playback. Press the PLAY button to release the pause mode.
◀❚▶ (direction)	: Press to change the direction of tape travel.

❹ **≜ (eject) button (deck A)**
❺ **Power STANDBY indicator**
Lights when in the power standby mode.
❻ **COUNTER RESET button (deck A)**
Press this button to set the digital counter to "0.00". Even if the POWER switch is set to STANDBY, the counter value at that time is stored in memory.
❼ **COMPU CAL button and indicator (deck A)**
Press this button to automatically set the recording characteristics with the COMPU CAL function. (See page 8.)
❽ **Indicators**
① DDRP indicator
② HX PRO indicator
③ Peak level indicator
These indicators light according to the level of the signal being recorded or the level of the signal recorded on the tape.
Note:
0 dB : IEC (DIN) STANDARD LEVEL (250 nWb/m)
0 VU : Signal level at 160 nWb/m
DX : DOLBY NR STANDARD LEVEL

④ Digital counter
Normally operates as a 4-digit linear tape counter. During the Music Scan mode, the number of tunes which will be skipped is displayed.
⑤ Mechanism mode indicators (deck A)

▶▶	: This lights when winding the tape from left to right.
◀◀	: This lights when winding the tape from right to left.
REC	: Lights when the unit is in the record and record-pause modes; blinks during record muting.
❚❚	: Lights in the pause mode.
PLAY.	: This lights when in the playback.
◀ , ▶	: Indicates the direction of tape travel.
⑥ DUBBING >>	: ">" lights when in the normal-speed dubbing mode. ">>" lights when in the high-speed dubbing mode.
⑦ CONT	: Lights when the unit is in the continuous play mode or in the alternate continuous recording mode.
⑧ Mechanism mode indicators (deck B)	: Refer to ⑤.
⑨ ⇄	: Indicates reverse mode.

❾ **COMPU CAL button and indicator (deck B)**
Refer to ❼.
❿ **COUNTER RESET button (deck B)**
⓫ **≜ (eject) button (deck B)**
⓬ **Cassette holder (deck B)**
⓭ **BLANK SKIP button and indicator**
When this button is turned ON during playback, if a blank (a non-recorded section) of over 15 seconds is detected, the deck automatically skips to the beginning of the next tune and resume playback.
⓮ **PHONES jack**
Connects headphones (with an impedance of 8 Ω to 1 kΩ).
⓯ **PHONES LEVEL control**
Controls headphones volume.
⓰ **INPUT LEVEL control**
See page 9.

❽

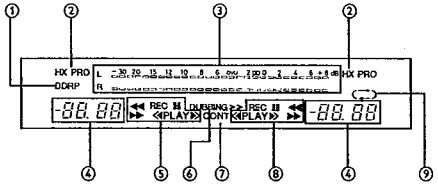

⓱ **PITCH control (deck A)**
Varies the tape speed in deck A in the range of about ±10%. However, it cannot change the tape speed in the high-speed dubbing.
Turning it counterclockwise toward "SLOW" causes the tape speed to decrease while turning clockwise toward "FAST" causes it to increase. The center click position is for the standard speed. (See page 7.)
⓲ **Mixing microphone level control**
Adjusts the microphone input level.
⓳ **MIX MIC jack**
Connects a microphone (with an impedance of 600 Ω to 10 kΩ) to this jack.
Sounds from the microphone are monaural.
⓴ **Cassette operation buttons (deck B)**
Refer to ❸.
㉑ **DOLBY NR button and indicators**
Set to B or C for recording using the Dolby NR system or for playing back a tape that was recorded using the Dolby NR system. Each time the button is pressed the NR mode changes and the indicator lights. (Dolby B NR -> Dolby C NR -> NR OFF -> Dolby B NR ...)
The MPX filter turns ON/OFF depending on whether Dolby B NR or Dolby C NR is ON/OFF (TD-W7SD only).
Set to OFF when the Dolby NR system is not used.
㉒ **REVERSE MODE switch**
Select the single side or full record/playback mode, or the continuous play mode. Each time the button is pressed the mode changes. (⇄ -> ⇄ -> ⇄ -> ⇄ ...) The current mode can be checked with the mechanism mode indicator.

⇄	: For single-side recording or playback.
⇄	: To play or record both sides A and B.
⇄	: To play sides A and B continuously.

㉓ **A ▶ B SYNCHRO DUBBING buttons**
Press to dub from deck A to deck B.
- NORM SPEED : Press to perform normal-speed dubbing.
- HIGH SPEED : Press to perform high-speed dubbing.

PLAYBACK

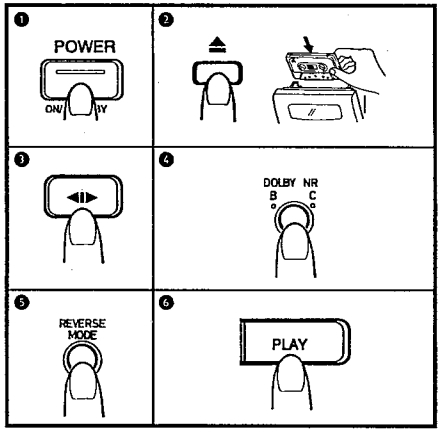

Playback of deck A
Operate in the order of the numbers in the illustration.
❶ Press the POWER switch to set to ON.
❷ Load a prerecorded cassette with side A facing out.
❸ Select the side to be played back.
Side A... Forward direction (PLAY ▶)
Side B... Reverse direction (◀ PLAY)
❹ Set the DOLBY NR switch to the same setting as when the tape was recorded.
❺ Select the REVERSE MODE.
❻ Press the PLAY button of deck A to start playback.
- When the deck contains a tape, the deck is turned on automatically and the tape is played back by only pressing the PLAY button.

Playback of deck B
Perform steps ❷ to ❻ of the above procedure for deck B.

Microphone mixing during playback
By connecting a microphone, microphone mixing with playback sound from deck A or deck B is possible.

Continuous play
First set the REVERSE MODE switch to ⇄.
Load cassette tapes in both decks and press the PLAY button of the deck to be played first for continuous play of both decks.
- At this time, the CONT indicator lights in the multimode display. When the tape in the deck which plays first reaches the end of side B (in the reverse direction), it automatically switches to the forward direction and enters the standby mode. At the same time, the other deck starts playback. These operations continue between decks A and B.
- While one deck is playing back, the cassette in the other one can be replaced. This is convenient for long-time playback of background music.

Note:
- Use tapes recorded using the same NR mode in decks A and B.

PITCH control (deck A)
It is possible to vary the tape speed in deck A in the range of about ±10% in the playback mode. The center click position is for the standard tape speed.

MULTI MUSIC SCAN

- The multi music scan mechanism of this unit allows you to quickly locate the beginning of a specific tune (up to 99 tunes before or after the current tune).
- The multi music scan mechanism functions by detecting non-recorded sections between tunes (of more than 4-5 sec.).
- The illustration shows the forward direction.

Example of fast forward scan.

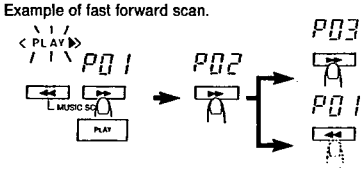

Procedure
1. Press the ▶▶ button during playback.
2. When more than 2 tunes are to be skipped, after procedure 1 press the ▶▶ (or ◀◀) button the number of times you want to skip tunes. The number of tunes to be skipped is displayed in the counter.

- Music Scan Operation can be performed on both decks A and B, but not simultaneously.
- Relation between Multi Music Scan and REVERSE MODE.

⇄ : The multi music scan mechanism operates on one side of the tape only. If the number set is too high (more than there are tunes remaining on that side), the tape stops when the end of the tape is reached.

⇄ : It operates continuously through one cycle of the A and B sides of the tape. If the number set has not been reached, the tape stops at the end of the B side. When the head rotates to play side A from B or B from A, this rotation is counted as one non-recorded section. When a recorded tune continues from side A to B, this tune is recorded as two tunes. In such a case, press the ◀◀ (or ▶▶) button one extra time.

Notes:
In the following cases, the mechanism may not operate correctly. This is not a malfunction; use the mechanism according to the type of program.
- Tapes with tunes having long planissimo passages (very quiet parts) or non-recorded portions during tunes.
- Tapes with short non-recorded sections.

BLANK SKIP

- Press the BLANK SKIP button to turn it ON (the indicator lights) before playback. When a blank (a non-recorded section) of over 15 seconds is detected during playback, the deck automatically goes into fast-forward scan mode and resumes playback from the beginning of the next tune.

Notes:
1. If the other deck is in Music Scan mode, the BLANK SKIP operation stops momentarily and restarts when the other deck has finished.
2. The BLANK SKIP indicator lights even when the BLANK SKIP operation is canceled momentarily, as described in 1.
3. Depending on the PITCH control setting, the BLANK SKIP operation may not be performed in deck A even if a tape with a non-recorded portion of over 15 seconds is being played. Reset PITCH control to the center click position and repeat the BLANK SKIP operation.

- Relation between REVERSE MODE and BLANK SKIP Functions
  ⇄ : Operates on one side of the tape only.
  ⇄ : Operates continuously from side A to side B.
  ⇄ : Operates on both sides of the tape.

RECORDING

Example: Deck B
Operate in the order of the numbers in the illustration.
- Make sure the safety tab of the cassette has not been broken off.

> It should be noted that it may be unlawful to re-record pre-recorded tapes, records, or discs without the consent of the owner of copyright in the sound or video recording, broadcast or cable programme and in any literary, dramatic, musical, or artistic work embodied therein.

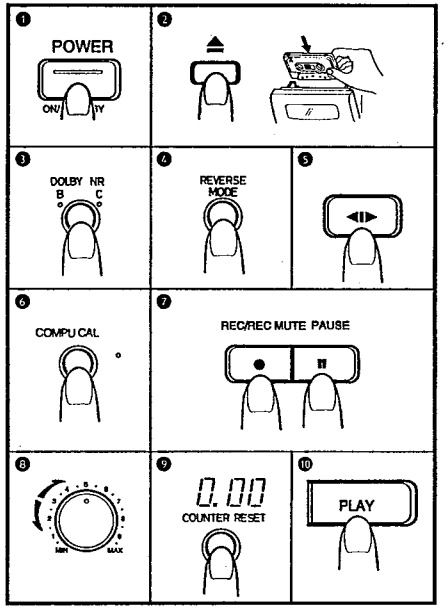

1. Press the POWER switch to set to ON.
2. Load a cassette for recording.
3. Set the DOLBY NR switch as required.
4. Set the REVERSE MODE switch as desired.
5. Select the side to be recorded.
6. Press the COMPU CAL button, if required. (See below.)
7. Press the ❚❚ PAUSE button and ● REC/REC MUTE button (record-pause mode).
   REC and ❚❚ indicators light.
8. Adjust the recording level. (See page 9.)
9. Press to "0.00".
10. Press the PLAY button to start recording.

Notes:
- When the safety tabs are removed from a cassette tape, the tape cannot be recorded even if you try. Make sure that both tabs are still in place when performing full recording.
- When the tape is recorded in the reverse direction (side B), only side B is recorded and then the tape stops automatically.

DDRP (Dynamics Detection Recording Processor) recording

DDRP recording is performed with suitable JVC CD players and the recording level adjustment is performed automatically.
Since recording level adjustment is performed automatically for different types of tape (Type I, II or IV), the adjustment of INPUT LEVEL control is not required.
Read the instruction book of your CD player carefully.

COMPU CALIBRATION (COMPU CAL) FUNCTION

- This unit is equipped with a COMPU CAL function which can automatically set the flat frequency characteristics and optimal tape sensitivity for each tape in approximately 30 seconds. Calibration data is retained for each tape type (Type I, II or IV).
- Calibration data set with COMPU CAL is retained even if the power is turned off (or the power cord is unplugged), and the previous calibration data for the same type of tape as the new tape is recalled each time tapes are changed.
- Performing COMPU CAL operations again replaces existing data with the new data.

COMPU CAL operation

- Insert the tape to be recorded and press the COMPU CAL button. During the operation, "C" -> "CA" -> "CAL" is displayed in the tape counter. When the operation finishes, the tape returns to its starting position, and the COMPU CAL indicator lights. COMPU CALIBRATION is now finished.
- Pressing the ■ (stop) button part-way will interrupt the operations.
- To recalibrate the unit, press the COMPU CAL button and wait for the COMPU CAL indicator to go out. Then, press the COMPU CAL button again.

Note:
If the tape is near its end, it will automatically stop and an error will be generated during operation. Therefore, be sure to check the time remaining on the tape (more than 2 minutes in the play mode) before starting the operations.

COMPU CAL Errors

- When the COMPU CAL indicator flashes, this indicates a COMPU CAL error.
- Press the ■ (stop) button to stop the error indication.

Care should be taken for the following items as they are the cause of errors.

1) Dirty heads -Clean the heads.
2) Scratches on the tape surface -Replace with an undamaged tape.
3) When the tape ends part-way through the operations -Change the tape position.
4) In rare cases, tapes may have characteristics which fall outside the COMPU CAL setting range.

- When an error occurs or when COMPU CAL operations are interrupted, calibration data cannot be stored in the memory. If settings were previously performed, the previous setting values are retained.
- After confirming items 1) to 3) above and stopping the error indication if there are no problems, even tapes which experience errors can be recorded on using either ① the unit's preset values or ② previous setting values. (These are the values obtained by opening and closing the cassette holder one time.)
  * Preset value: a standard value corresponding to each type of tape, which allows normal recording. (The preset value condition is in effect when the COMPU CAL indicator is unlit.)

Notes:
1. Since COMPU CAL operations record a test tone on tapes, previously recorded contents will be erased.
2. Using new tapes and cleaning the heads beforehand are recommended for optimal COMPU CAL operations.
3. Some variance in characteristics exists even with the same type of tape made by the same manufacturer. Therefore, when precise settings are desired, performing COMPU CAL operations for each recording is recommended.
4. To delete contents set with COMPU CAL, simultaneously press the ● REC/REC MUTE and B deck COUNTER RESET buttons. This deletes the calibration data for the type of tape currently inserted in the unit. Calibration data for other tape types is not deleted.

ALTERNATE CONTINUOUS RECORDING BETWEEN DECK A AND DECK B WITH AUTOMATIC SELECTION

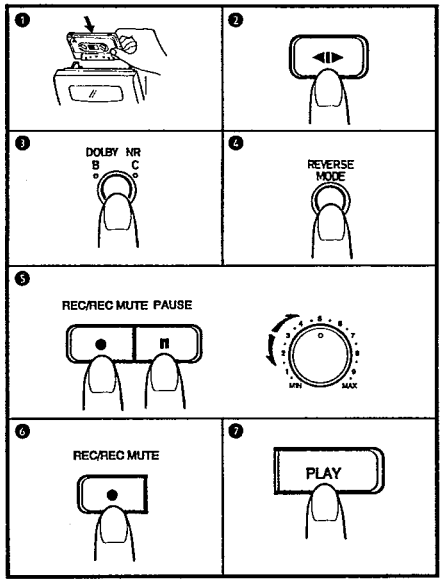

❶ Load the tapes to be recorded in decks A and B with sides A facing out. (Be sure to wind past the leader tapes.)
❷ Press the ◀▶ (direction) buttons to select the tape transport directions of decks A and B.
❸ Set the DOLBY NR switch as required.
❹ Set the REVERSE MODE switch to ⇄.
❺ Set deck A to the record-pause mode and adjust the recording level.
❻ Set deck B to the record-standby mode. (press only the ● REC/REC MUTE button.)
In this time, the REC and CONT indicators light, and the ◀ or ▶ indicator flashes, showing the direction of the next tape that will be recorded.
❼ Press the PLAY button of deck A; continuous recording starts.

- When recording finishes in one deck and continues in the other, the CONT indicator goes off and the ◀ or ▶ indicator stops flashing.
- When side B of deck A finishes recording, deck B starts recording automatically. If both decks start recording from the beginning of side A, the continuous recording will be done for about 3 hours with two C-90 tapes. When starting recording from deck B, set deck B to the record (or record-pause) mode first and set deck A to the record-standby mode.

To cancel the record-standby mode.
Press the ■ (stop) button on the deck during record-standby.

MICROPHONE MIXING DURING RECORDING

By connecting a microphone, microphone mixing during recording is possible by following the recording procedure. Adjust the microphone input level by setting the record-pause mode and observing the peak level indicators.

- When the record-pause mode is set and the INPUT LEVEL control is set to MIN, sounds are output only from the microphone, and it can be used as a public address system.

RECORDING LEVEL ADJUSTMENT

Adjust the recording level while observing the peak level indicator indication. For example:

With Type IV (metal) tape

(TD-W7SD)

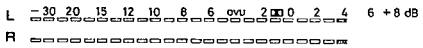

(TD-W717/718)

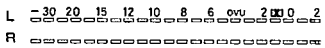

Because of metal tape's higher saturation level, it is OK that occasionally, "+4" lights on the TD-W7SD, and "+2" lights on the TD-W717/718.

With Type I (normal) or Type II (chrome) tape

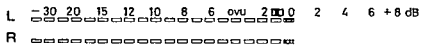

It is OK that "+ 0" lights occasionally.

- When the recording level is too low, the hiss noise inherent in the tape will be conspicuous.
- When the recording level is too high, exceeding the saturation level, the recording will contain cracking noise and will be distorted.
- If "+ 4" lights too often because the recording level is too high, the recorded sound may be distorted and seem to be breaking up. If only "0" lights infrequently, the level is too low and the recording may contain tape hiss.

It is best to adjust so that the maximum sound level of the source to be recorded reaches the very limit of the saturation level of the tape to be used.
The best level varies depending on the type of music and type of tape so it is better to make a test recording, using FM music, records, etc.

AUTOMATIC RECORD MUTING

This facility is used to eliminate undesired sections and leave an appropriate non-recorded section.

A. To leave non-recorded sections of about 4-5 seconds automatically
1. When the undesired section comes during recording, press the ● REC/REC MUTE button and release it.
2. The REC indicator flashes and a non-recorded section is made during record muting operation. About 4-5 seconds later, the tape automatically stops, and the unit enters the record-pause mode.
3. Press the PLAY button to start recording again.

B. To leave non-recorded sections of more than 4-5 seconds
1. Keep the ● REC/REC MUTE button pressed continuously as long as you want to make a non-recorded section. By releasing the finger from the button after the above operation, the unit enters the record-pause mode.
2. Press the PLAY button to start recording again.

C. To leave non-recorded section of less than 4-seconds
When the undesired section comes during recording....
After the ● REC/REC MUTE button is pressed, press the PLAY button before the unit enters the pause mode to start recording again, or press the ❚❚ PAUSE button to enter the record-pause mode.

- The peak level indicator lights even during record muting according to the input level which can be heard from the speakers or headphones so that recording can be resumed at the exact point on the tape.

ERASING
When recording on a prerecorded tape, the previous recording is automatically erased and only the new program is recorded on the tape.
To erase a tape without making a new recording...
Follow the section "RECORDING" but in step ❻, set the INPUT LEVEL control to MIN.

LINEAR TAPE COUNTER OPERATION
When the power is connected, "0.00" appears in the display. During tape playback, the digital counter operates as a 4-digit linear tape counter which displays the approximate playback time in minutes and seconds for C-46L, C-60, and C-90 tapes. There is a one-minute error differential between the actual playback time and the playback time displayed. With C-30, C-46, C-80, and other tapes, this differential is even greater. A different time may also appear for tapes of the same length but with a different thickness.

DOLBY NR and DOLBY HX PRO
Dolby NR System
To reduce the hiss inherent in tape recording, use the Dolby NR System when making recordings. When listening to a tape recorded with the Dolby NR System, set the DOLBY NR switch to B or C according to the system selected in the recording mode.

Note:
The sound quality will change if the positions of the DOLBY NR switch are different in recording and playback.

Dolby HX PRO headroom extension
When a source which contains many high-frequency components is recorded, these high-frequency signals have the same function as bias and therefore, the effective bias current changes.
This will result in phenomena such as changes in the level of low-frequency signal and subsequent distortion and reduction of the high-frequency saturation level.
Dolby HX PRO headroom extension system controls the bias current so that the effective bias is constant even when there are fluctuations in the high-frequency components of the input signal.
This greatly improves the high-frequency saturation level while reducing the low-frequency signal level variations and distortion.

- The dynamic sound recorded with this system sounds the same even when the tape is played back in a deck that does not have Dolby HX PRO.
- This system automatically works when in recording; however, Dolby HX PRO is not a noise reduction system.

COMPU LINK CONTROL SYSTEM

COMPU LINK
Control System

The Compu Link Control System controls relative operations between components automatically and facilitates various operations.
This is a system originated and developed by JVC for facilitating various system operations. There are two versions of this system; version 1 and 3. (For version 1 components, "COMPU LINK-1/SYNCHRO" is marked on the rear panel. For version 3 components, "COMPU LINK-3/SYNCHRO" is marked on the rear panel. This unit belongs to version 3.)
The version 3 system controls relative functions between this unit and an amplifier or receiver, in addition to all of the functions of version 1.

Automatic Power On/Off (STANDBY) Function (COMPU LINK-3)
This function is available when an amplifier or receiver having a COMPU LINK-3/SYNCHRO terminal is connected. For example, if a deck contains a tape, the deck is turned on automatically and the tape is played back by only pressing the PLAY button. When the amplifier or receiver is switched to STANDBY, the source unit is automatically switched to STANDBY.

Automatic Source Selection (COMPU LINK-1, 3)
When the provided remote cables are used for connecting this unit to other components which have COMPU LINK-1 or 3/SYNCHRO terminals, the switch-over of all system components is possible with simple one-touch of the source selector button of JVC's amplifier or receiver.
By doing this, the corresponding component will start playing automatically.
The source selector button of the remote control unit or the activation button of the desired component can be also used for this purpose. When the components have been switched over, the previous component will stop playing within five seconds.

Synchronized Recording (COMPU LINK-1, 3)
Synchronized recording refers to the process in which the deck starts recording in synchronism with the CD player. Perform the synchronized recording as follows:
1. Set the cassette deck to the record-pause mode in accordance with the recording procedures on page 8.
2. If you want the programmed recording, program the desired tunes in any order you wish to hear.
3. Press the PLAY/PAUSE button of the CD player. By so doing, the cassette deck is placed in the record mode and synchronized with the CD player for recording. Synchronized recording thus can be made possible.

DDRP (Dynamics Detection Recording Processor) recording
The DDRP function makes possible fully automatic recording when used with a suitable JVC CD player. When the DDRP button of a suitable JVC CD player is pressed, the recording level is first adjusted automatically, then recording starts; it is not necessary to start recording by the normal procedure.

Notes:
- Synchronized recording or DDRP recording stops automatically when the CD player stops playing.
- Synchronized recording does not start except when the record-pause mode is set by simultaneously pressing the ● REC/REC MUTE and ❚❚ PAUSE buttons in the stop mode.
- To cancel synchronized recording or DDRP recording, press the STOP button of the CD player or cassette deck.
- The source is locked to the CD position during synchronized recording or DDRP recording to avoid accidental stops or switch-over to another component. To switch over the components, cancel synchronized recording or DDRP recording first.
- The INPUT LEVEL control does not function during DDRP recording.

DUBBING

- **Synchro dubbing**
  Operate in the order of the numbers in the illustration.

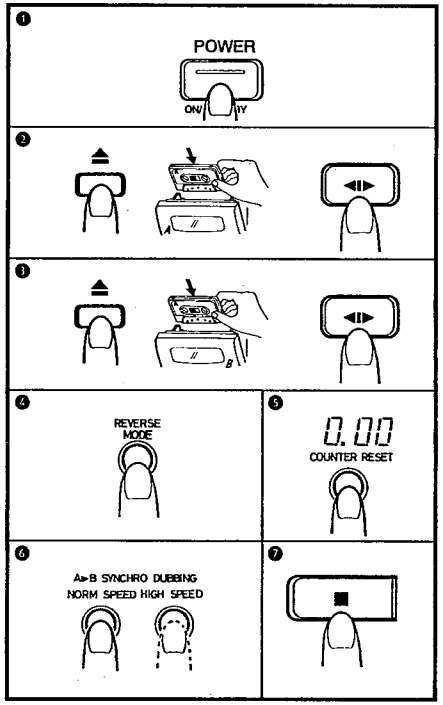

❶ Press the POWER switch to set to ON.
❷ Insert a prerecorded tape with side A facing out into deck A, and press the ◀❚▶ (direction) button to select the travel direction.
❸ Insert the blank tape with side A facing out into deck B, and press the ◀❚▶ (direction) button to select the side to be recorded.
❹ Select the REVERSE MODE.
❺ Press to "0.00".
❻ Press the SYNCHRO DUBBING (NORM or HIGH SPEED) button to start dubbing.
❼ Press the ■ (stop) button of deck B to stop dubbing.

When deck B stops, the dubbing mode is automatically released.
- **Synchro record muting**
  When deck A stops or enters any mode other than the playback mode during dubbing, deck B enters the record mute operation automatically and then enters the record-pause mode.

- **Before pressing the SYNCHRO DUBBING button**
  Confirm that both decks are in the stop mode before starting dubbing.

Dubbing and DOLBY NR switch
During dubbing, the same NR mode selected for the playback cassette is applied to the recording cassette, regardless of the position of the NR switch.

Dubbing and BLANK SKIP
When the BLANK SKIP button is ON during normal-speed dubbing, the BLANK SKIP function operates in deck A.
When deck A enters in the BLANK SKIP mode, deck B enters standby status for the record-pause mode after automatic record muting operation.
When deck A resumes playback, dubbing commences.

Input level
Recording is performed at the same level as the playback tape during dubbing regardless of the position of the INPUT LEVEL control.

Microphone mixing during dubbing
By connecting a microphone, microphone mixing during dubbing is possible with the playback sounds from deck A. Be sure to perform dubbing at normal speed. When performing microphone mixing during dubbing, use cassettes recorded with NR OFF mode for the deck A.

Tape editing
1. Press the ● REC/REC MUTE button when finished dubbing a tune. Deck B automatically enters the record muting mode and leaves a non-recorded section of about 4-seconds then enters the record-paused mode.
2. Press the ■ (stop) button of deck A and search for the next tune you want by using the ▶▶, ◀◀ or PLAY button. Then stop the cassette just before the beginning of the tune.
3. Press the same SYNCHRO DUBBING button pressed before the pause again, and dubbing will start.

Notes at dubbing
1. Normal-speed dubbing is recommended to obtain good sound quality.
2. Television receivers placed close to the deck may cause interference on the recorded signal when the deck is used in the high-speed dubbing mode. If this happens, either turn off the television receiver or use the normal-speed dubbing mode.

MAINTENANCE

The importance of cleaning
When the tape is moving, magnetic powder and dust naturally accumulate on the heads, capstan and pinch roller. When they become too dirty:
- tone quality deteriorates.
- the output sound level drops.
- the previous sound is not erased satisfactorily.
- recordings are not satisfactory.

Because of this, clean the heads, etc. every 10 hours of use so that optimum recordings will be made.

Cleaning the heads, pinch roller and capstan
Wipe the heads, the capstan, etc. with a cotton swab with its tip dipped in alcohol. For effective cleaning, use a cleaning kit available from your audio store. After cleaning, be sure that the cleaning fluid has completely dried before loading a cassette.

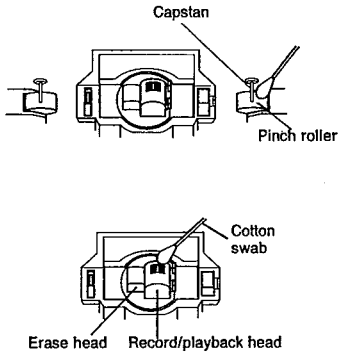

Demagnetizing the heads
Magnetic objects brought close to the head or using the deck for a long period of time results in magnetization of the head, thus noise occurs. When the noise is excessive, high frequencies on the recorded tape may be erased.
Demagnetize the heads and other metal parts that come into contact with the tape every 20-30 hours of use with a head demagnetizer (available from your audio store).

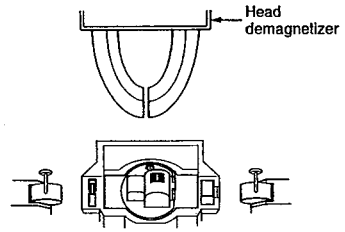

JVC
VICTOR COMPANY OF JAPAN, LIMITED

Printed in Malaysia
VNN2348-671M

TD-W717TN C/J
TD-W718BK A/B/E/EN/G/U/UT

(No. 4358) 11

1 Location of Main Parts

■ Top view

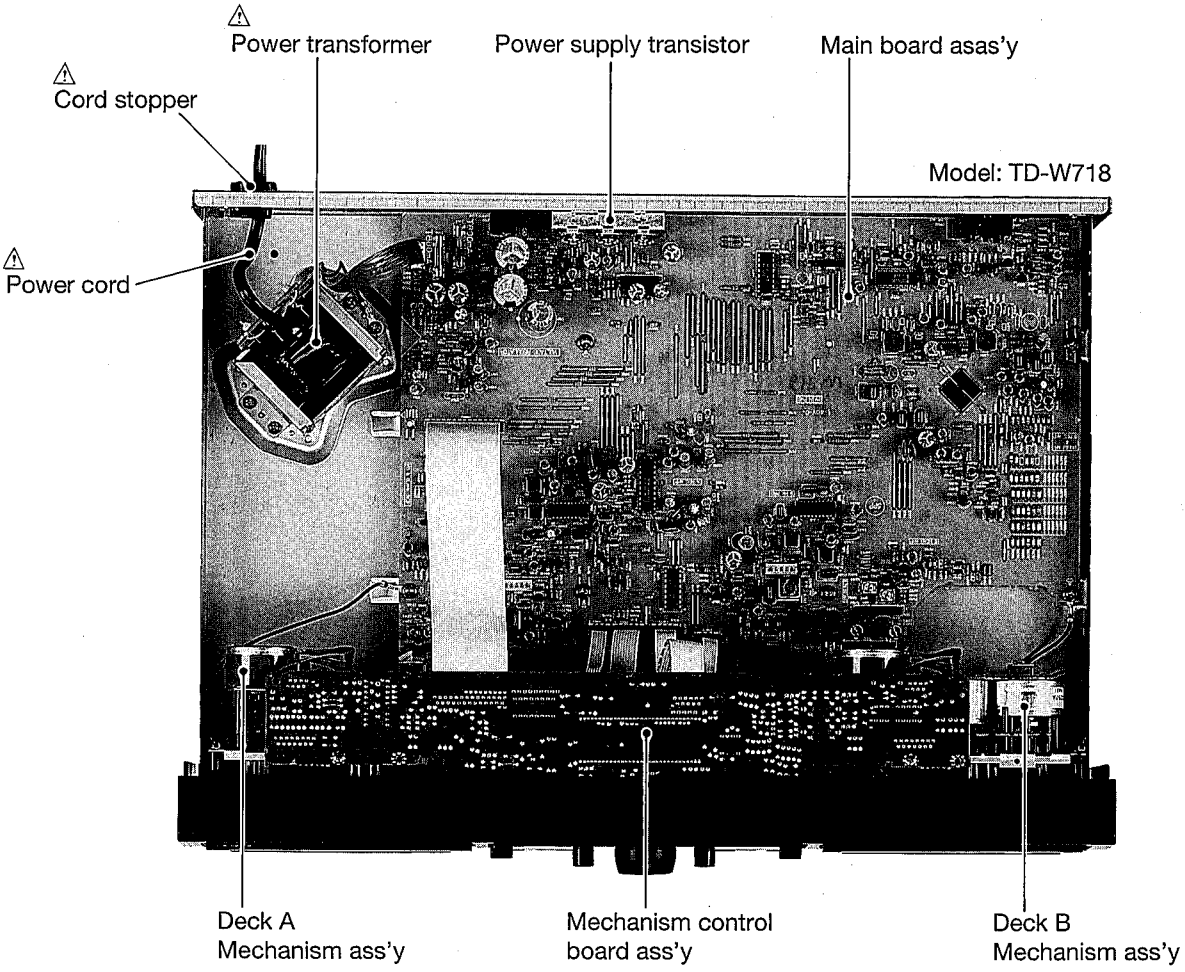

Fig. 1 – 1

■ Mechanism

◆ Top view (Deck B)

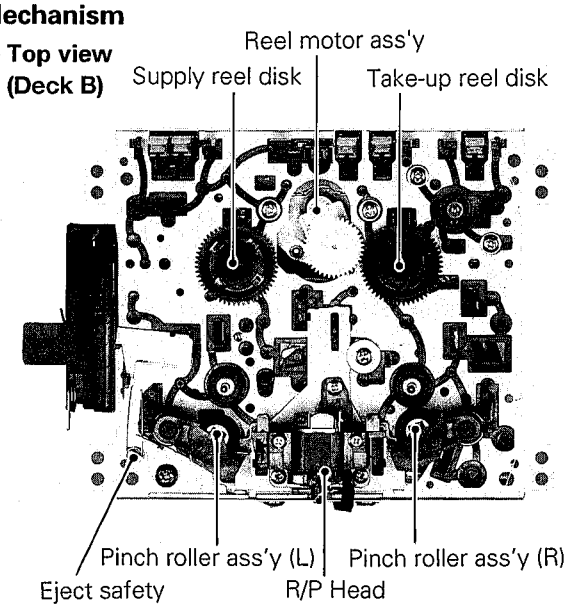

Fig. 1 – 2

◆ Bottom view

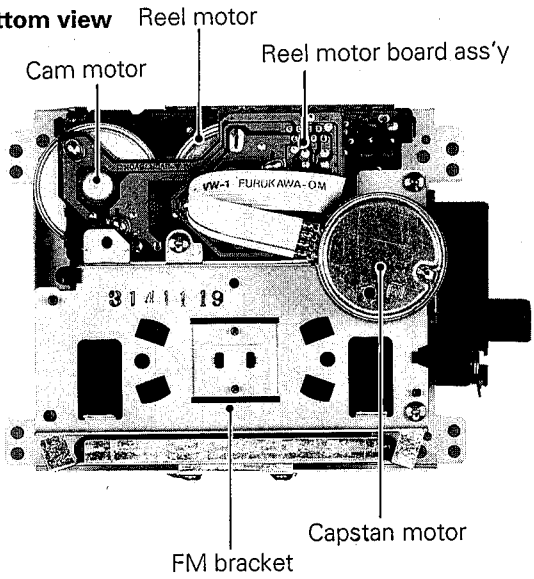

Fig. 1 – 3

2 Removal of main parts

■ Enclosure Section

◆ Top cover (Fig. 2 – 1)

1. Remove four screws ① retaining the top cover from both side.
2. Remove two screws ② retaining the top cover from the back side.
3. To remove the top cover ,slide in direction of allow and lift away (refer to Fig. 2 – 1).

◆ Front panel assembly (Fig. 2 – 2)

1. Remove the top cover as described in above.
2. Remove three screws ③ retaining the front panel ass'y from bottom side.
3. Release the front panel ass'y from two pawls in the front and bottom sides and draw it to the front side.
4. Disconnect all connectors between the mechanism ass'y, front panel ass'y and the main board ass'y.

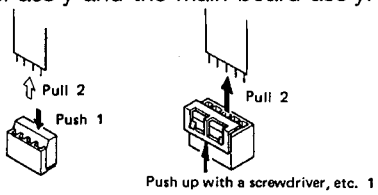

◆ Mechanism assembly

★ Although the mechanism assembly can be removed without detaching the front panel ass'y, it is recommended to detach the front panel ass'y to do the work with ease.

1. Remove two screws ④ or two screws ⑤ from the corners of the mechanism. (Fig. 2 – 5)
2. After disconnecting the mechanism control board from the connector of the mechanism board, remove two screws ⑪ to remove the mechanism control board. (Fig. 2-3, 2-4)
3. Open the door and remove the mechanism ass'y.
   (At this time, door lock arm spring and door lock arm are removed together with.)
4. For moving the mechanism ass'y only, disconnect the following wirings.
   a) Mechanism ass'y side (Fig. 2 – 4)
      Top side connector of the cam switch board (CN2).
      Connector of the motor board (CN1). (Board to Board connector)
   b) Main board ass'y side (Fig. 2 – 3)
      Disconnect CN802 from Mecha control board, CN801 and CN803 from Switch & Volume board ass'y, CN871 from Mic board ass'y and CN861 from H. Phone jack board ass'y.
      Disconnect wire coming from the head mount ass'y CN811 at deck A and CN815 at deck B.
      Remove two screws ⑥ and remove the two GND wires from Deck A and Deck B.

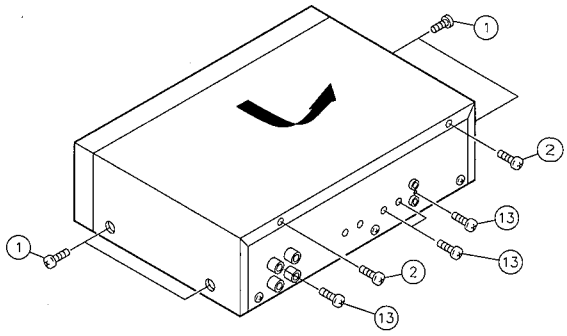

Fig. 2 – 1

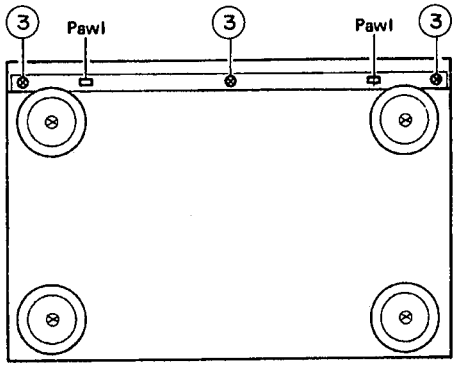

Fig. 2 – 2

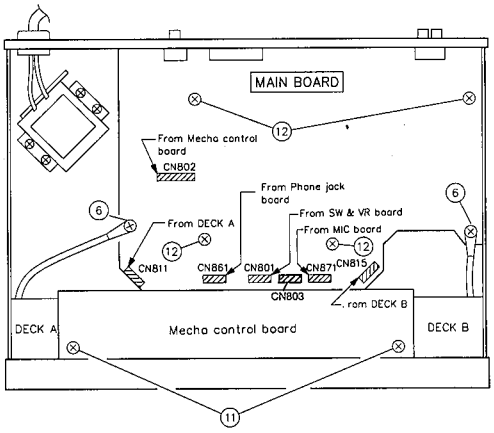

Fig. 2 – 3

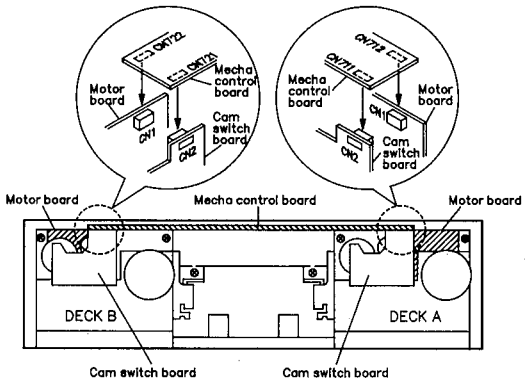

Fig. 2 – 4

◆ **Eject arm ass'y** (Fig. 2 – 5)

1. Remove two screws ⑦ retaining the eject arm ass'y and pull it out.

◆ **Mechanism holder and door ass'y** (Fig.2-6 – Fig.2-8)

1. Remove four screws ⑧ retaining the mechanism holder. (see Fig.2-8)
2. Remove the damper ass'y(for easy reassembling work). Insert an originary(–)screwdriver or the like in to the gap between the damper and the front panel to disengage the pawl , and draw the damper ass'y outwards.(see Fig 2 – 6)
3. Remove the arm shaft of the cassette holder (door ass'y)from the mechanism holder.(The door spring is engaged with the door side by the longer side.) (see Fig. 2 - 7)
4. Remove the eject spring from lock lever and mechanism ass'y. (see Fig. 2 - 7)

◆ **Switch & Volume board ass'y and Mechanism Control board ass'y** (Fig. 2 – 8)

1. After removing the mechanism holder, proceed to the following steps.
2. Pull out the INPUT volume knob.
3. Remove five screws ⑨ retaining the Switch & Volume P.C. board.
4. Remove one screw ⑭ and remove the cap.
5. Lift the board right upwards to remove it since it is connected to the mechanism control key board with connector pins (CN603/CN604).
6. Disconnect CN602 coming from Mechanism control board ass'y (CN702).

◆ **Headphone jack board ass'y and Mic jack board ass'y** (Fig. 2 – 8)

1. After removing the Switch & Volume board ass'y, pull the H. Phone jack board ass'y and Mic jack board ass'y outwards while pushing it down toward the bottom side to remove it.

◆ **Key switch board ass'y** (Fig. 2 – 8)

1. Remove one screw ⑩ (DeckA or B) retaining the board ass'y.
2. Do the same for the other side.

◆ **Main board ass'y** (see Fig2 – 3,Fig 2 – 1)

1. Remove four screws ⑫ retaining the board.
2. Remove four screws ⑬ retaining the board to the rear panel.

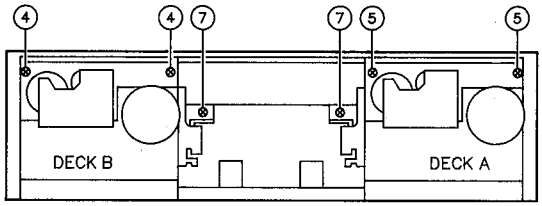

Fig. 2 – 5

How to remove damper

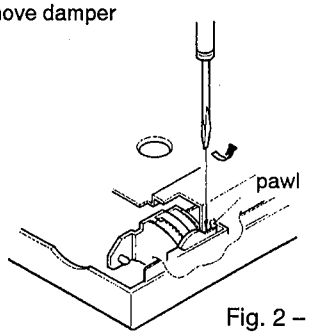

Fig. 2 – 6

How to engage the door and eject spring

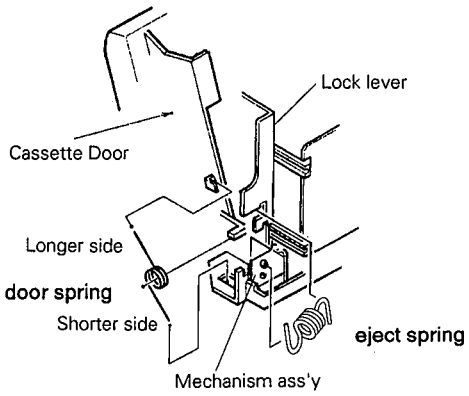

Fig. 2 – 7

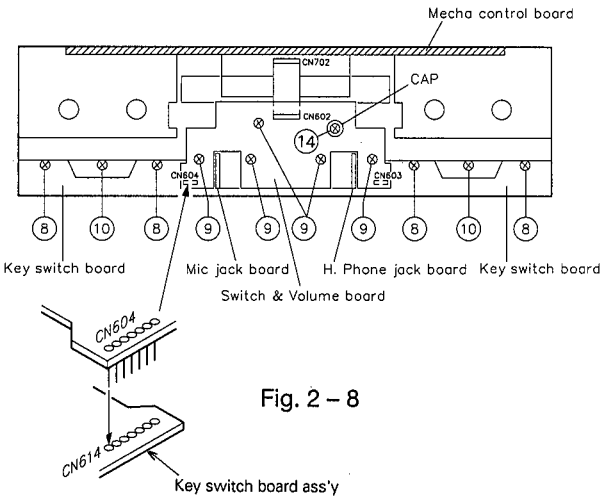

Fig. 2 – 8

● Reassembling procedure of the front panel ass'y

1. Attach the Key switch board ass'y to the panel with two screws.
2. Put the door ass'y and the mechanism holder together with on the front panel.
3. Attach the mechanism holder to the front panel ass'y with two screws.
4. Engage the door spring properly.
5. Install the damper. (Push the pawl side last to engage it.)
6. Install the eject arm ass'y.
7. Attach the Switch & Volume board ass'y to the panel with five screws.
8. Install the mechanism ass'y.
9. HooK the eject spring between lock lever and mechanism ass'y.
10. Attach the Mecha control board ass'y to the panel with two screws.

■ Cassette mechanism section

◆ Head mount assembly (Fig2-9,Fig2-10)

1. Remove three screws ① retaining the head mount ass'y.

◆ Pinch roller assembly (Fig. 2 – 9, Fig. 2 – 11)

1. Remove the pinch roller and pinch roller spring by disengaging the pawl hooking it.
2. For reengaging the pinch roller and pinch roller spring, refer to Fig. 2 – 11.

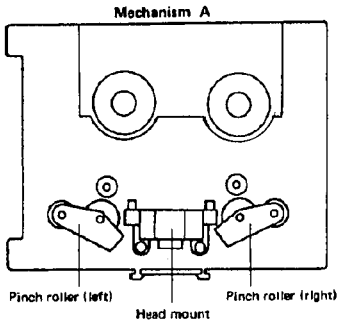

Fig. 2 – 9

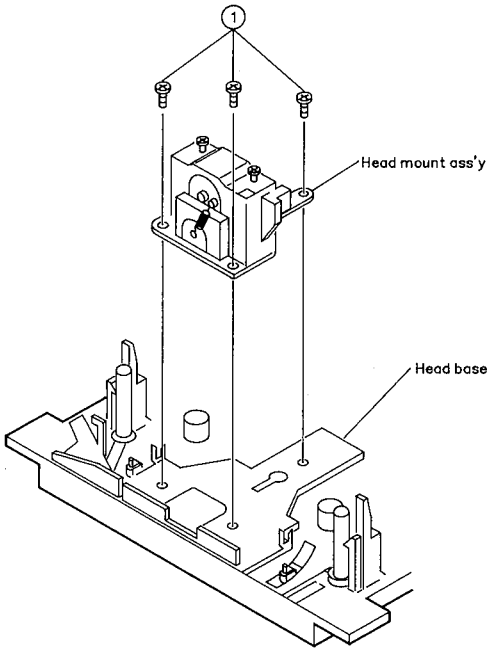

Fig. 2 – 10

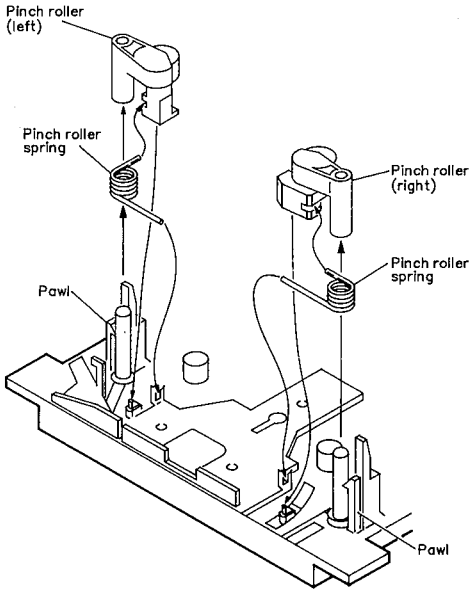

Fig. 2 – 11

◆FM bracket/Capstan motor assembly (Mechanism A and B)

1. Remove soldering of connector FM on Reel motor board. (Fig. 2 – 12)
2. Remove three screws ② and disengage two pawls, and then the FM bracket and the capstan belt can be removed. (Fig. 2 – 12, 2 – 13)
3. Remove two screws ③ retaining the capstan motor from the FM bracket. (Fig. 2 – 12)
4. For reengaging the capstan belt, refer to Fig. 2 – 13.

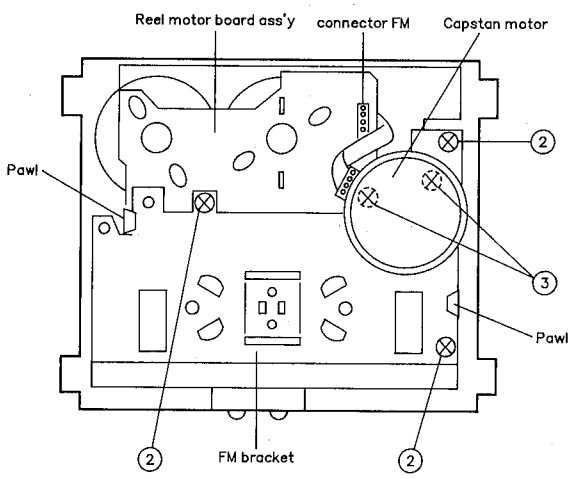

Fig. 2 – 12

◆Flywheel ass'y (Fig. 2 – 14)

1. Remove two screws ④ and remove the shield plate.
2. Pull up the Flywheel (L) and (R) and remove them.

◆Reel motor board (Fig. 2 – 14)

1. Remove four soldering of the Reel motor and Actuator motor and remove the Reel motor board.

◆Reel motor board (Fig. 2 – 15)

1. Remove two screws ⑤ from rear of chassis and remove the Reel motor ass'y toward upward.

◆Actuator motor ass'y (Fig. 2 – 15)

1. Remove two screws ⑥ from rear of chassis and remove the Actuator motor ass'y toward upward.

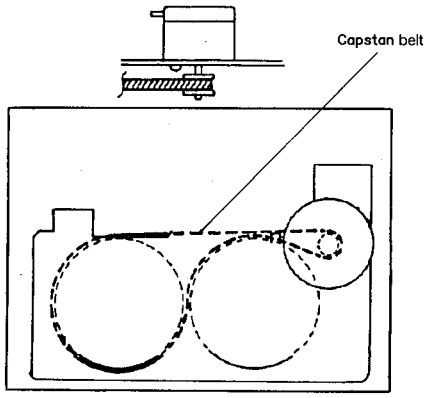

Fig. 2 – 13

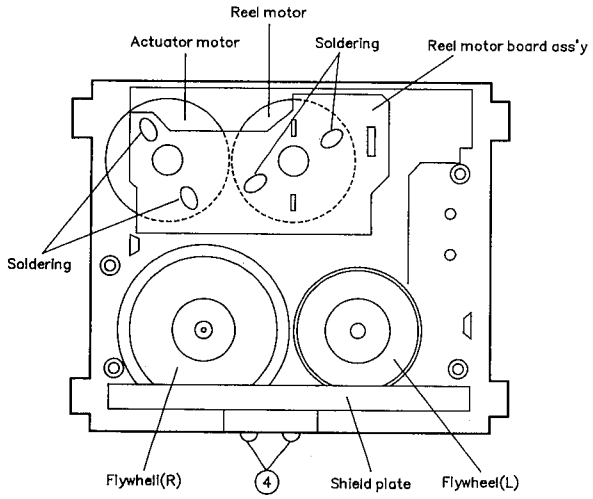

Fig. 2 – 14

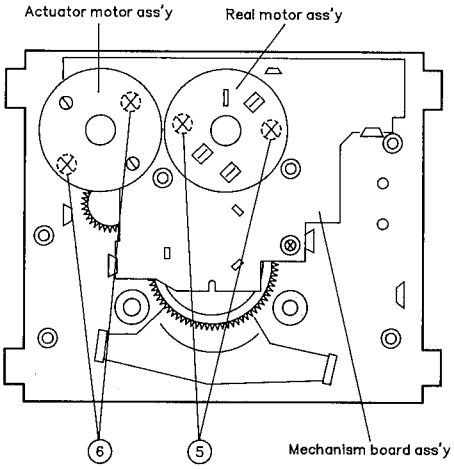

Fig. 2 – 15

◆**Mechanism board ass'y** (Fig. 2 – 16)

1. Remove one screw ⑦ retaining the board.
2. Release the Mechanism board from five pawls.
3. For gearing between the Mechanism board and Control cam, see the magnified illustration in a circle.

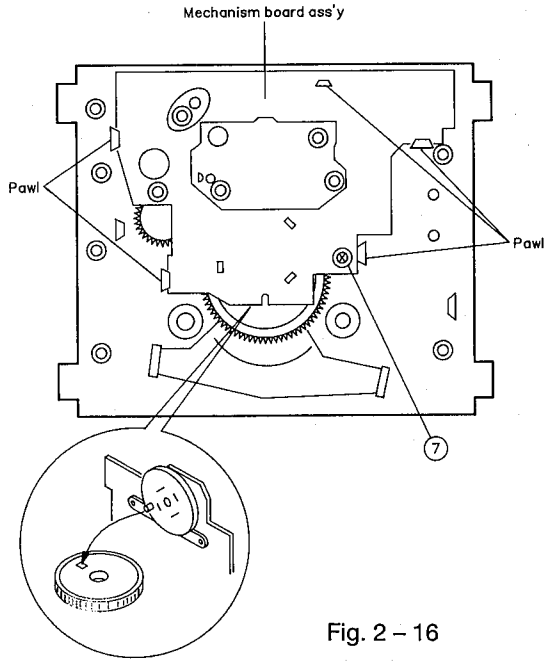

Fig. 2 – 16

◆**Control cam** (Fig. 2 – 17, 2 – 18)

1. Release the control cam from two pawls. (Fig. 2 – 17)
2. For assembling the control cam, fits ⓐ zone (groove) of control cam to ⓐ position of Pinch lever and ⓑ zone (groove) to ⓑ position of Head base shaft. (Fig. 2 – 17, 2 – 18)

◆**Actuator gear A and B (small)** (Fig. 2 – 17)

1. Release the actuator gear A (small) from one pawl and remove it toward upward.
2. Release the actuator gear B (small) from one pawl and remove it toward upward.

◆**Actuator gear (large)** (Fig. 2 – 17)

1. After removing the Control cam, actuator gear A (small) and actuator gear B (small), remove the Actuator gear (large).

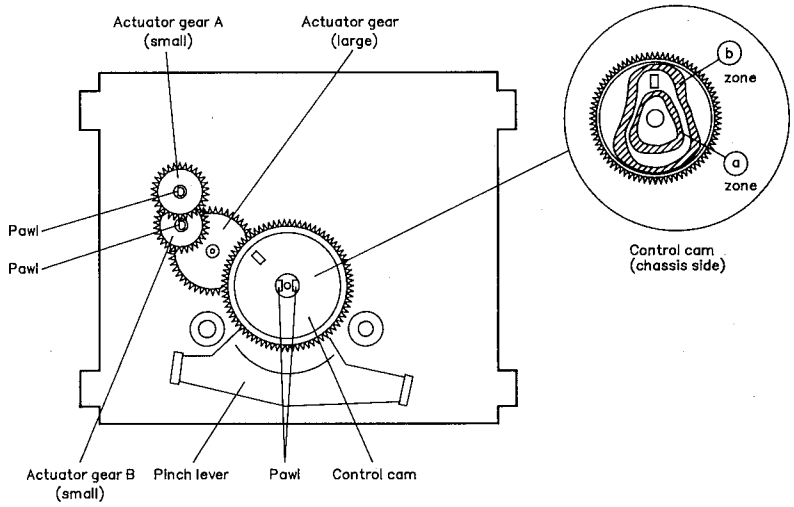

Fig. 2 – 17

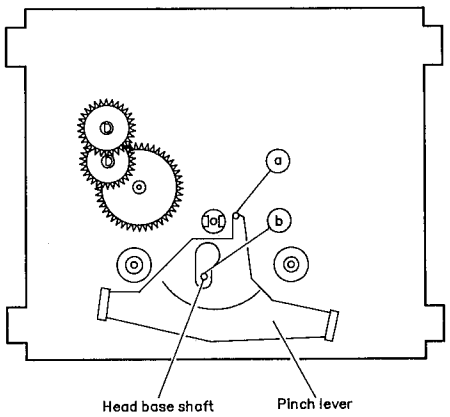

Fig. 2 – 18

3 Main Adjustment

◆Measuring instruments required for adjustment

(1) Low – frequency oscillator(oscillation frequency 50Hz – 20kHz, 0dB output with 600 Ω impedance)
(2) Attenutor(600 Ω impedance)
(3) Electronic voltmeter
(4) Standard tapes
VTT712 (3kHz tape speed, wow and flutter measurement)
VTT727 (400 Hz) (DOLBY standard level)
TMT735 (1 k, 12.5 k), VTT739 (63, 1 k, 10 k) (playback frequency)
VTT703 or VTT703L (10 kHz), VTT704 (12.5 kHz) (azimuth)
TMT6447, TM6448 (music scan)
(5) Recording reference tapes
AC-224 (Normal), AC-513 (TDK SA) (CrO_2)
AC-712 (TDK MA) (Metal)
(6) 600 Ω resistors(for attenuator matching)
(7) Distortion meter(bandpass filter)
(8) Torque gauge (cassette) for CTG-N, TW2111, TW2121, TW2231 and TW2241, mechanism adjustments
(9) Wow & flutter gauge
(10) Freequency counter gauge
(11) M300 gauge
(12) Band pass filter

◆Power supply voltage
Set the line voltage selector switch to 240V/ 230V/ 220V/ 127V/ 120V/ 110V according to ⇄ your local voltage.
AC240V, 50/60Hz :A version
AC230V, 50/60Hz :B/E/EN/G version
AC120V, 60Hz :C/J version
AC230/127/110V, 50/60Hz:U/UT version

(13) Standard position of the switch and volume knob

Switches and volume knobs		Setting position
INPUT LEVEL	:	MAXIMUM
DOLBY NR	:	OFF
REVERSE MODE	:	⇄
PITCH CONTROL	:	CENTOR
MIC MIXING LEVEL	:	MAXIMUM
COMPU CAL LED	:	OFF
PHONES LEVEL	:	MAXIMUM
BLANK SKIP	:	OFF

◆Location of Adjustment

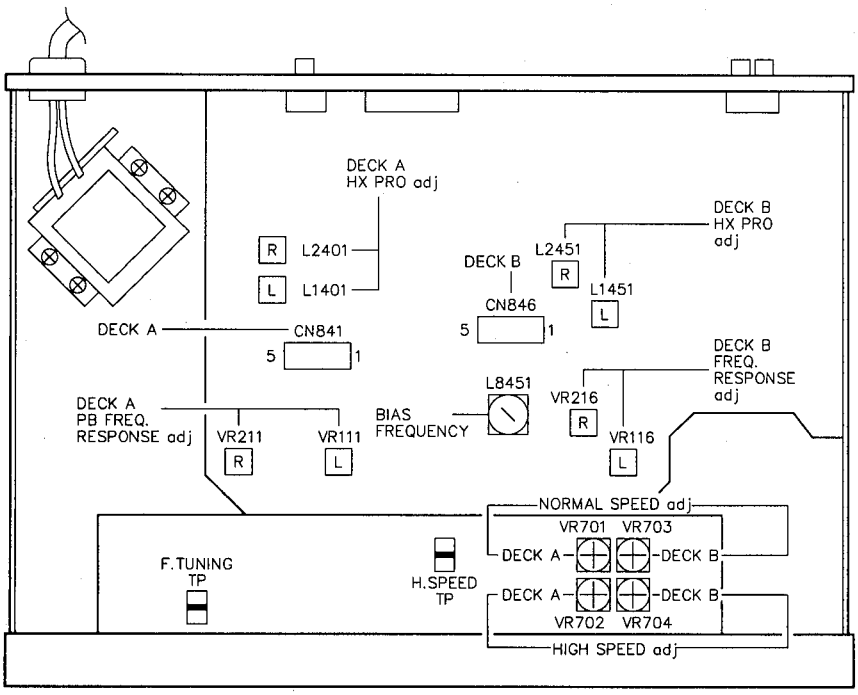

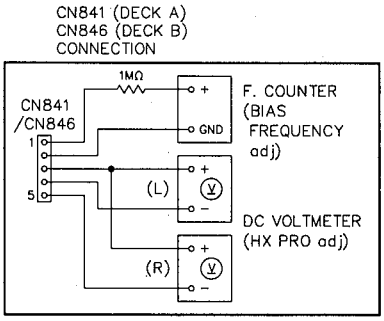

◆ Compu-Calibration for F.CAL mode(automatically adjustment)

◆ F.CAL mode setting procedure

1. Short the F.TUNING TP and GND on mecha control board ass'y.
2. Before set the F. CAL mode, press the Counter Reset key while pressing the STOP key of deck B by reason of cancellation the factory setting level.
3. Press the POWER key while pressing the FF [▶▶] key of deck A under the power standby mode.
   At the same time, [F.CAL] mode is displayed on the deck B counter of FL indicator.

NOTE: When Compu-Calibration is finished normally, [COMPU-CAL] LED light up and result number of calibration is displayed on the counter of FL indicator.
If Compu-Calibration is finished abnormally, [COMPU-CAL] LED blinks and error number of calibration is displayed on the counter of FL indicator.
Then correct the error message and readjust the Compu-Calibration.

Item	Condition	Adjustment
Level meter sensitivity adjustment	Mode:REC/PAUSE at deck B Test siganl level: 400Hz or 1kHz,-4dBs Input:LINE IN(L and R)	1. Supply a 400Hz or 1kHz signal to both L and R of LINE IN terminals at –4dBs. 2. Press the [COMPU-CAL] key of deck B,adjust the level meter sensitivity automatically. 3. Confirm that difference level between left and righkt within 0.3dB.
Playback level adjustment at decks A and B	Direction:FWD(decks A and B) NR:OFF Test tape:VTT-727	1. Load the VTT-727 test tapes to both decks A and B. 2. Press the [PLAY] key of deck A and playing back the tape. 3. Press the [COMPU-CAL] key of deck A and adjust the playback levels of both decks A and B automatically.
Recording charactor adjustment (Bias and REC/PB sensitivity) at decks A and B	Direction:FWD(decks A and B) Recrding tape: AC-224(normal) AC-513(CrO2) AC-712(metal) NR: OFF	1. Load the AC-224 tapes to both decks A and B. 2. Press the [COMPU-CAL] key of deck A,start the recording charactor adjustment of deck A and then deck B automatically. After while about 50 seconds, adjustment is completed automatically. While adjusting, confirm that all segment is displayed on FL indicator. 3. Load the AC-513 tapes to both decks A and B and adjusting as the same manner above step 2. Afer while about 40 seconds,adjustment is completed automatically. 4. Load the AC-712 tapes to both decks A and B and adjusting as the same manner above step 2. After while about 40 seconds,adjusting is completed automatically. NOTE; When recording the each tapes, do not use while about 3 minutes range of tape start and end winding positions.

If following error messages are indicated on the FL indicator when adjusting the Conpu-Calibration,correct these abnormal conditions and readjust the Compu-Calibration.

1. In case the Level meter sensitivity adjustment.

(Error No.)	(Contents of the message)
ER01	No signal
ER02	Over the adjustment range,too much large the input signal level
ER03	Over the adjustment range,too much small the input signal level

2. In case the Playback level adjustment/

ER04	No playback signal
ER05	Over the adjustment range,too much large the playback signal
ER06	Over the adjustment range,too much small the playback signal

3. In case the Recording signal adjustment.

(1) For Lch

ER12	No 400Hz test signal for recording
ER13	No 12.5kHz test signal for recording
ER14	No playback signal (Do not recrded)
ER15	Can not find the recording start position
ER16	Over the adjustment range of 400Hz playback signal level,too much large 400Hz playback signal
ER17	Over the adjustment range of 400Hz playback signal level,too much small 400Hz playback signal
ER18	Too much large 12.5kHz playback signal level compare with 400Hz signal
ER19	Too much small 12.5kHz playback signal level compare with 400Hz signal

(2) For Rch

ER22	No 400Hz test signal for recording
ER23	No 12.5kHz test signal for recording
ER24	No playback signal (Do not recorded)
ER25	Can not find the recording start position
ER26	Over the adjustment range of 400Hz playback signal level,too much large 400Hz playback signal
ER27	Over the adjustment range of 400Hz playback signal level,too much small 400Hz playback signal
ER28	Too much large 12.5kHz playback signal level compare with 400Hz signal
ER29	Too much small 12.5kHz playback signal level compare with 400Hz signal

(3) For Lch and Rch

ER30	Compu-Calibration of AC-513 adjustment is started before adjustment of AC-224 is not complete finished
ER31	Compu-Calibration of AC-712 adjustment is started before adjustment of AC-224 is not complete finished

◆ Mechanism Adjstment

0dBs = 0.775V

Item	Conditions	Adjustment and Confirmation	Standad value	Adjust point
Adjusting Head azimuth	Test tape :VTT704 (12.5kHz)	1. Connect an electronic voltmeter to the LINE OUT terminals. 2. Play back the VTT704 (12.5kHz) test tape. 3. Adjust the head angle with the screw (FWD and REV) until the reading of the electronic voltmeter becomes maximum for both channels (phase difference must be "0".) 4. Repeat the adjustment in FWD and REV modes as well as for the decks A and B. 5. Confirm that difference level between deck A and deck B within 2dB.	Maximum Deck A, B 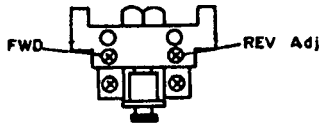 	Screws (FWD, REV)
Adjusting Tape speed (motor speed)	1. After adjustment of normal speed, then adjust high speed. 2. For high speed adjustment, set the deck for play mode and shortcircuit between H. SPEED TP and GND. 3. Do not do anything while H. SPEED and TP GND are shortcircuited. Test tape: VTT-712 (3kHz)	1. Connect a frequency counter to the LINEOUT terminals. 2. Perform normal speed adjustment first, and then do high speed adjustment. 3. Play back the VTT712 test tape. 4. Adjust for normal speed Adjust VR701(deck A) and VR703 (deck B) for normal speed at 3000Hz. 5. Adjust for high speed After adjustment of normal speed, adjust VR702 (deck A) and VR704 (deck B) for high speed at 6000Hz. 6. Difference in FWD and REV frequencies must be less than 48Hz.	Normal speed: Deck A,B;3000 ± 15Hz High speed : Deck A,B;6000 ± 30Hz	Deck A : Normal;VR701 High ; VR702 Deck B; Normal;VR703 High; VR704
Checking wow and flutter	Test tape: VTT-712 (3kHz)	Connect a wow and flutter meter to LINE OUT terminals. Play back the VTT712 test tape. Check to see if the reading of the meter is less than 0.17% (WRMS).	less than 0.17% (WRMS)	
Checking play back torque	Torque gauge TW2111(FWD) TW2121(REV)	Employ a torque testing cassette tape (TW2111[FWD] / TW2121[REV] for the checking, or remove the cassette cover and use a torque gauge.	27 – 70 g·cm	
Checking fast forward/ rewind torque	Torque gauge TW2231(FWD) TW2241(REV)	Measure the torque in the fast forward mode in the same manner as in the above. Test cassette : TW2231 (FWD), TW2241 (REV)	90 – 200 g·cm	

◆ Electrical Adjustment Procedure

Item	Check and Adjustment			
1 Cheking DOLBY circuit (Rec.mode) (BIAS-CUT)			Input signal (Frequency, level)	Output raise value,deviation value
	Signal input: LINE IN Cal.level: 400Hz, – 8dBs Output terminal TP : NR IC831 (53) &(8) pin.	DOLBY B (Rec)	1kHz, cal. – 40dB	+5.7 dB ± 2 dB
			5kHz, Cal. – 20dB	+3.5dB ± 1.5 dB
			1kHz, Cal.	0 dB $\pm^{0.5}_{1.0}$ dB
		DOLBY C (Rec)	1kHz, Cal. – 40	+16.2 dB $\pm^{3}_{2}$ dB
			5kHz, Cal. – 20	+2.9 dB ± 2.5 dB
			1kHz, Cal.	0 dB ± 1 dB

Item	Conditions	Adjustment and Confirmation	Standard	Adjusting
*2 Play back level check	Test tape VTT727 : 400Hz	Play back VTT727. Check that the level at LINE OUT is –4.5 dBs ± 1dB. Difference between Lch and Rch must be less than 1 dB at LINE OUT.	LINE OUT –4.5 dBs ± 1dB Phone Out –14.5 dBs ± 2 dB	
*3 Playback frequency response adjustment	Test tape TMT735:1kHz/12.5kHz VTT739: 1kHz/63Hz	Play back TMT735 test tape, and adjust VR116, VR216 (deck [B]) and VR111, VR211 (deck [A]) so that deviation of 12.5 kHz to that of 1 kHz is 0 ± 0.5 dB (deck A) and 0 ± 0.5 dB (deck B). Then, play back VTT739 test tape to confirm that deviation of 63 Hz to 1kHz is +2 ± 3 dB.	with 12.5kHz as reference, 0 ± 0.5 dB (deck [A]) and 0 ± 0.5 dB (deck [B]) at 1 kHz 63 Hz (check): +2 ± 3 dB	Deck [B] L: VR116 R: VR216 Deck [A] L: VR111 R: VR211
*4 Bias frequency adjustment	Tape : Metal Mode: REC Frequency counter Input impedance : more than 1MΩ (See page18) Deck [B] TP: CN846 pin 1 Deck [A] TP: CN841 pin 1	Connect frequency counter to the CN846 (deck [B]) and CN841 (deck [A]) and adjust L8451 (deck [B]) and L8401 (deck [A]) so that the counter reads 95 kHz.	95 kHz ± 0.5 kHz	Deck [B] L8451 Deck [A] L8401
*5 Slave oscillation (HX PRO) adjustment	DC. Voltmeter Deck [A] TP: CN841 Deck [B] TP: CN846	This step must be performed after the bias frequency adjustment. Load a metal tape and set the deck to the recording mode. 1. Adjust for deck [A] Adjust L1401 and L2401 to minimize respective voltages of CN841 (PIN 3 – 4) at Lch and (PIN 3 – 5) at Rch. 2. Adjust for deck [B] Adjust L1451 and L2451 to minimize respective voltages of CN846 (PIN 3 – 4) at Lch and (PIN 3 – 5) at Rch.	Minimum	Deck [A] L: L1401 R: L2401 Deck[B] L: L1451 R: L2451

Item	Conditions	Adjustment and Confirmation	Standard	Adjusting
6 Input sensitivity level check		1. Supply a 1kHz signal to the LINE IN terminals at –20dBs, confirm that LINE OUT level is –8dBs. 2. Supply a 1kHz signal to the MIC input terminals at –66dBs, confirm that LINE OUT level is –8dBs. 3. Confirm that difference level between left and right within 2dB at LINE IN terminals and within 3dB at MIC terminals.	LINE IN : –20dBs ± 2 dB MIC: –66 dBs ±3 dB	
*7 REC/PB frequency response check	LINE INPUT LEVEL : Ref. – 20dB(– 40dBs ± 2dB) MIC INPUT level : Ref. –20dB (–86dBs ± 3dB) NR SWITCH : OFF	This step must be performed after the slave oscillation adjustment. Record the 1 kHz and 12.5 kHz signals at the level of –20 dB (20 dB lower than the reference level). Playing back the recorded signals, check that the level of the 12.5 kHz signal is 0 ± 2 dB to the level of the 1 kHz signal. 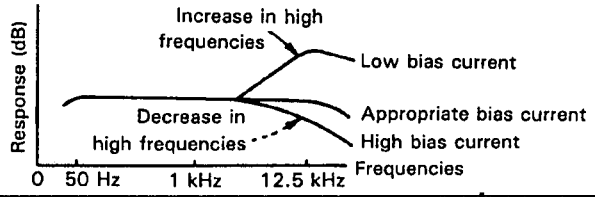	12.5 kHz level: 0 ± 2 dB higher than the 1kHz level.	
8 Recording/ playback sensitivity check		1. Supply a 400Hz signal to the LINE IN terminals record a 400Hz signal at reference level of –20dB. 2. Confirm that REC indicator should turn on when LINE OUT level is –28dBs during recording.	Normal, Chrome, Metal: –28dBs ±1 dB	
9 Maximum out put check		Suply 1 kHz signal to the LINE IN terminal in the Rec. monitoring mode, and read non-clipped signal level at the LINE IN terminal.	LINE OUT: more than 5 dBs PHONES OUT: more than – 16dBs	
10 Checking record/ playback distortion		1) Record a 1 kHz, –20 dBs signal to LINE IN terminals. 2)Play back the recorded part, Check the output with a distortion meter to see if the value conforms to the standard value.	Nornal: Less than 2% CrO2/Metal: Less than 3%	
11 Checking signal to noise ratio recording playback		1) Record at 1 kHz, –20 dBs signal, Stop the input by disconnecting from the terminal to perform non-signal recording. 2)Play back the recorded part.Measure the – 8 dBs recording output and the non-signal recording output for comparison using an electronic voltmeter. Check to see if the value conforms to the standard value.	Normal, More than 40 dB Metal, chrome; More than 41 dB	

Item	Conditions	Adjustment and Confirmation	Standard	Adjusting
12 Checking erasing coefficient		1) Apply a 400 Hz, +20 dBs signal to the LINE IN terminals. 2)Perform recording with the signal enhaned by 20 dB 3)Erase a part of the recording. 4)Measure the output difference between the erased part and non- erased part to compare with an electronic voltmeter. For the measurement using a metal tape, connect a band pass filter between the deck and the electronic voltmeter. 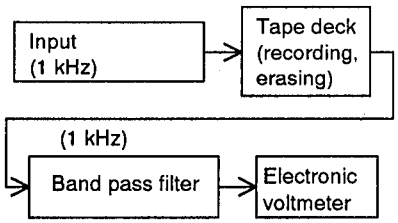 	More than 55 dB	

4 Wiring Connections

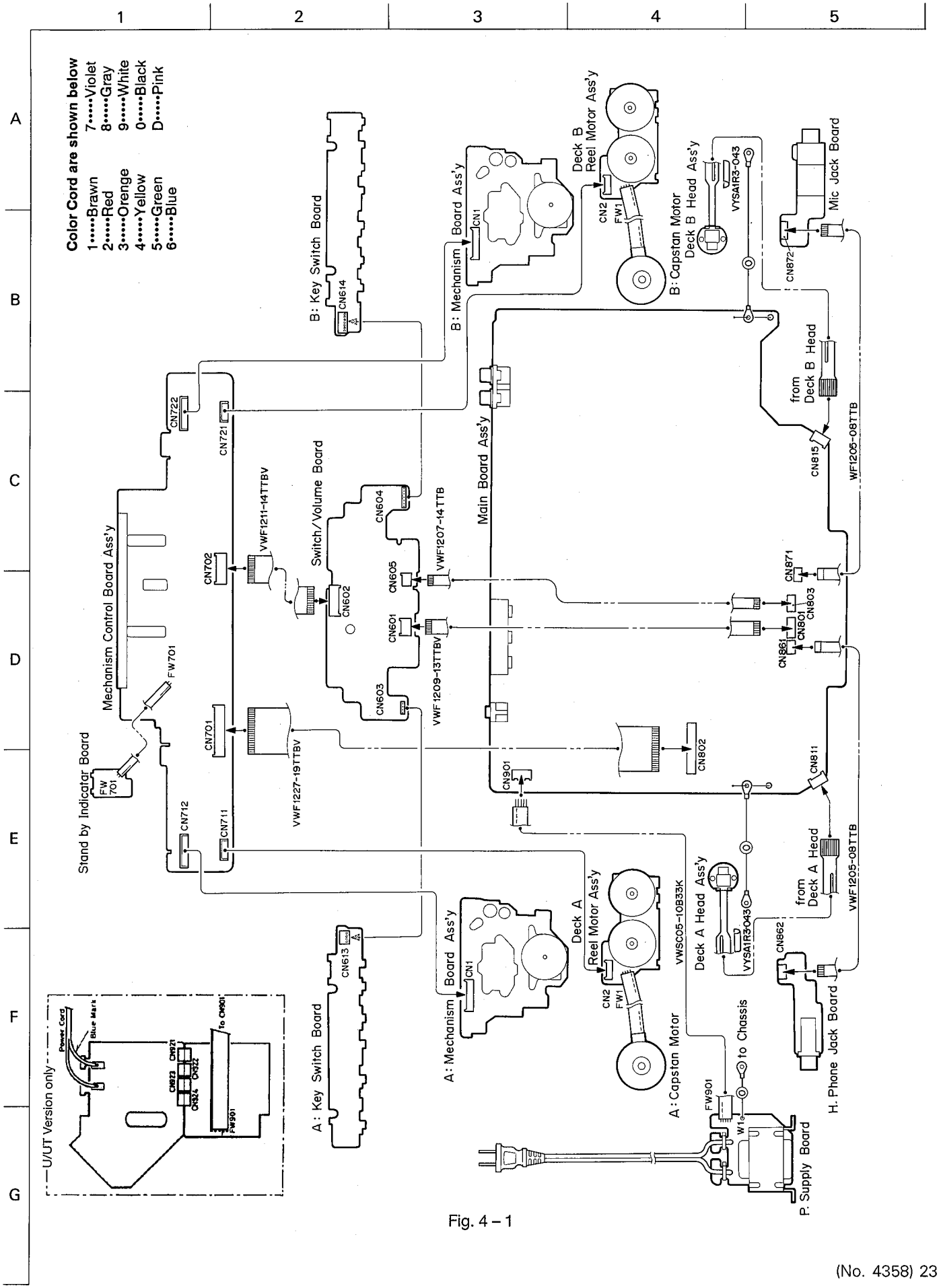

Fig. 4 – 1

5 Block Diagram

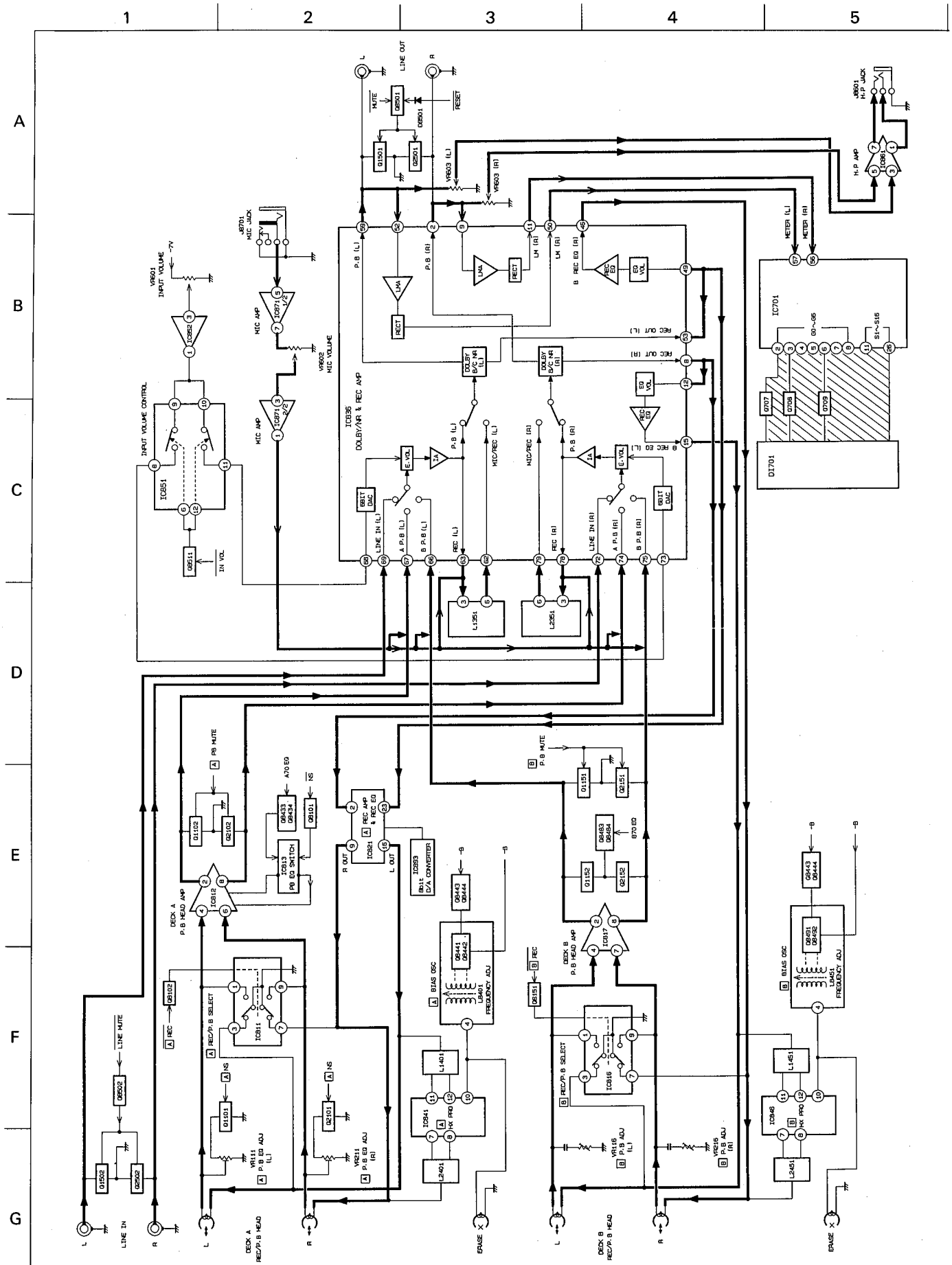

Fig. 5 – 1

6 Standard Schematic Diagrams

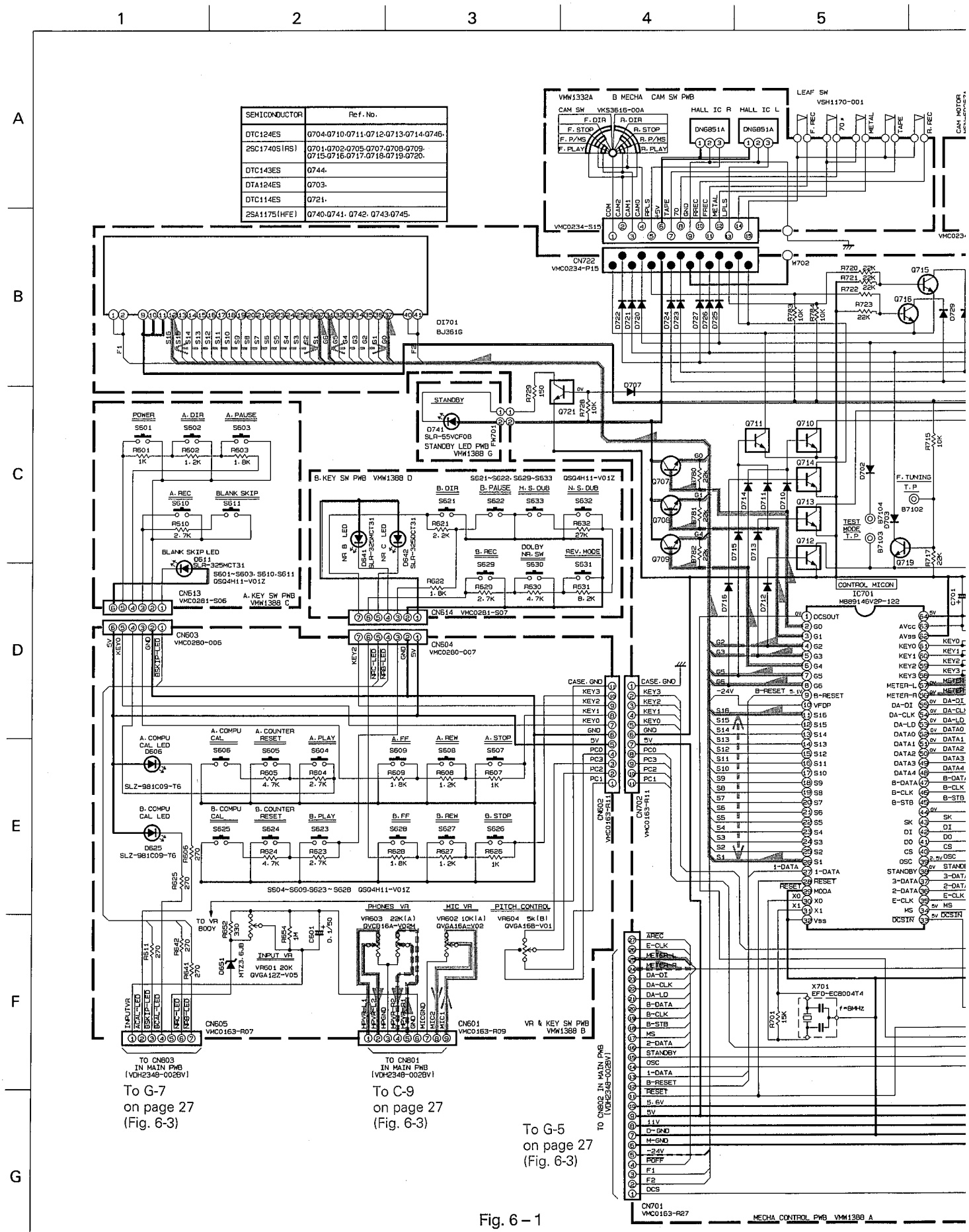

SEMICONDUCTOR	Ref. No.
DTC124ES	Q704, Q710, Q711, Q712, Q713, Q714, Q746,
2SC1740S(RS)	Q701, Q702, Q705, Q707, Q708, Q709, Q715, Q716, Q717, Q718, Q719, Q720,
DTC143ES	Q744,
DTA124ES	Q703,
DTC114ES	Q721,
2SA1175(HFE)	Q740, Q741, Q742, Q743, Q745,

To G-7 on page 27 (Fig. 6-3)
To C-9 on page 27 (Fig. 6-3)
To G-5 on page 27 (Fig. 6-3)

Fig. 6 – 1

Note : VDH2348002DV

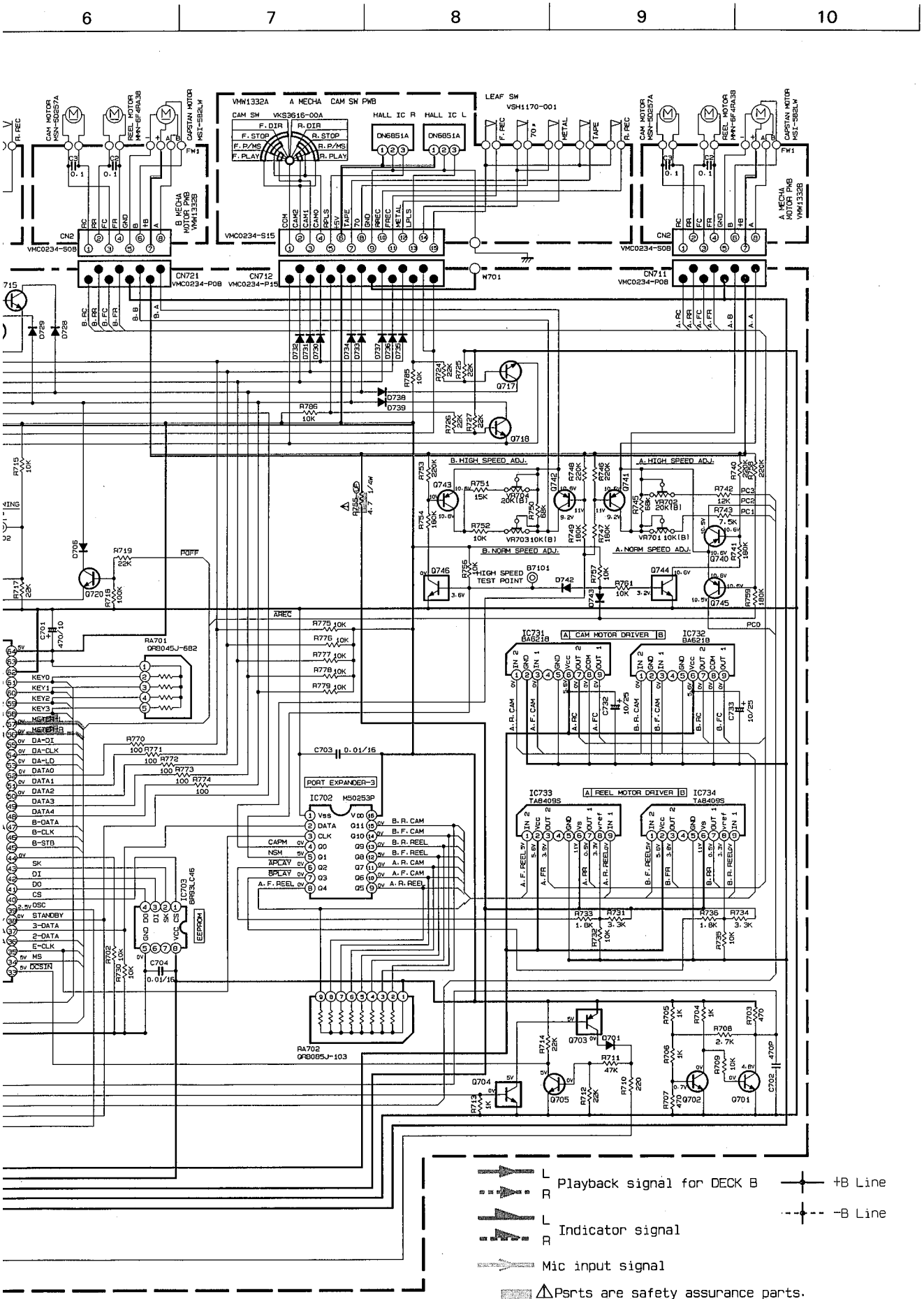
6
7
8
9
10
VWM1332A A MECHA CAM SW PWB
CAM SW VKS3616-00A
F.DIR
R.DIR
F.STOP
R.STOP
F.P/MS
R.P/MS
F.PLAY
R.PLAY
HALL IC R
HALL IC L
DN6851A
LEAF SW
VSH1170-001
CAM MOTOR MSN-50257A
REEL MOTOR MAN-6F4RA38
CAPSTAN MOTOR MSI-582LW
B MECHA MOTOR PWB VWM1328
A MECHA MOTOR PWB VWM1328
VMC0234-S08
VMC0234-S15
VMC0234-P08
VMC0234-P15
CN721
CN712
CN711
W701
B.HIGH SPEED ADJ.
A.HIGH SPEED ADJ.
B.NORM SPEED ADJ.
A.NORM SPEED ADJ.
HIGH SPEED TEST POINT
P101
A CAM MOTOR DRIVER B
IC731 BA6218
IC732 BA6218
A REEL MOTOR DRIVER B
IC733 TA8409S
IC734 TA8409S
PORT EXPANDER-3
IC702 M50253P
IC703 BR93LC46
EEPROM
RA701 QR8045J-682
RA702 QR8085J-103
KEY0
KEY1
KEY2
KEY3
DA-DI
DA-CLK
DA-LD
DATA0
DATA1
DATA2
DATA3
DATA4
B-DATA
B-CLK
B-STB
SK
DI
DO
CS
STANDBY
3-DATA
2-DATA
E-CLK
MS
DCSIN
B.R.CAM
B.F.CAM
B.R.REEL
B.F.REEL
A.R.CAM
A.F.CAM
A.R.REEL
A.F.REEL
Playback signal for DECK B
Indicator signal
Mic input signal
+B Line
-B Line
⚠Psrts are safety assurance parts.
When replacing those parts make
sure to use the specified one.

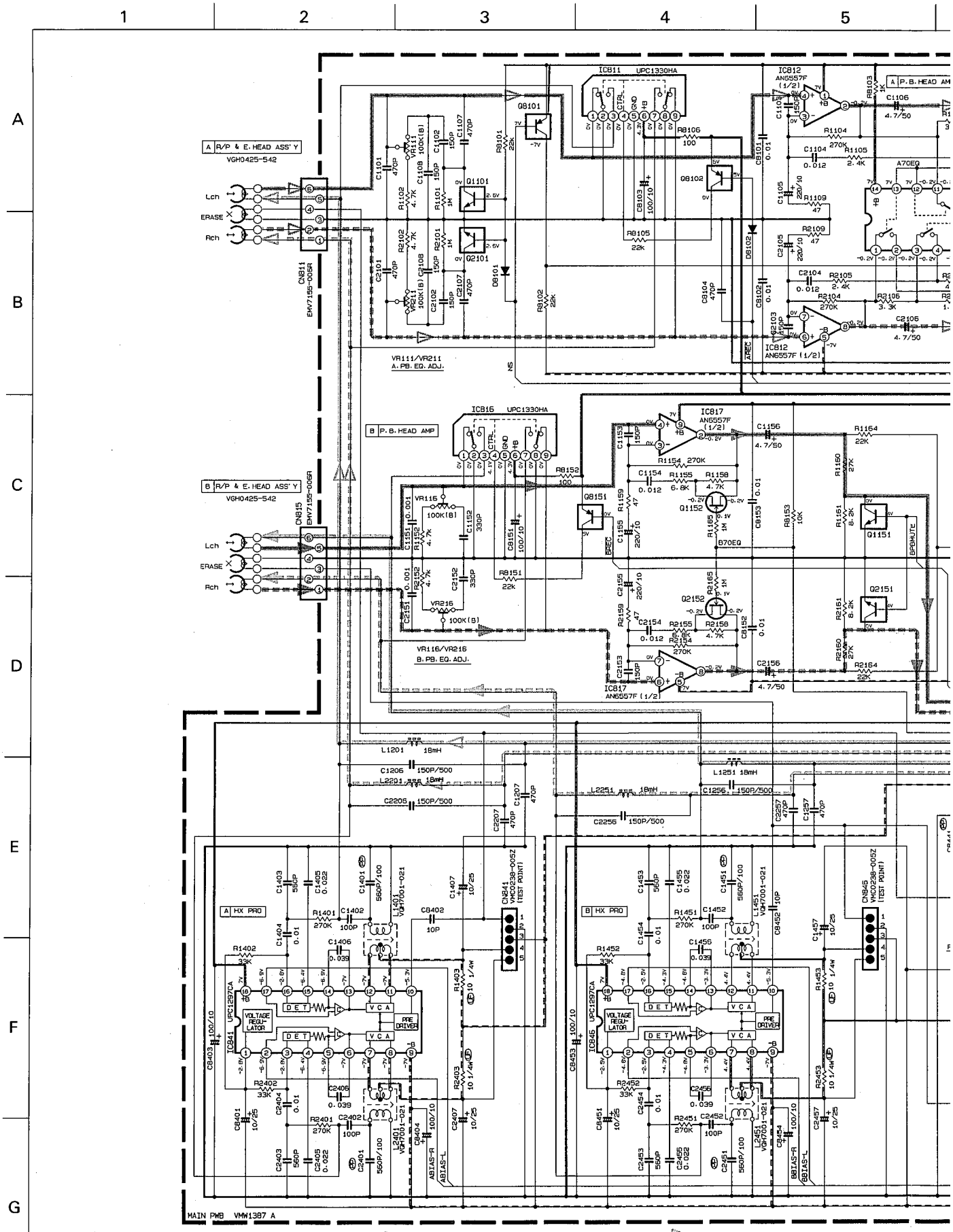

Note : VDH2348002AV

Fig. 6 – 2

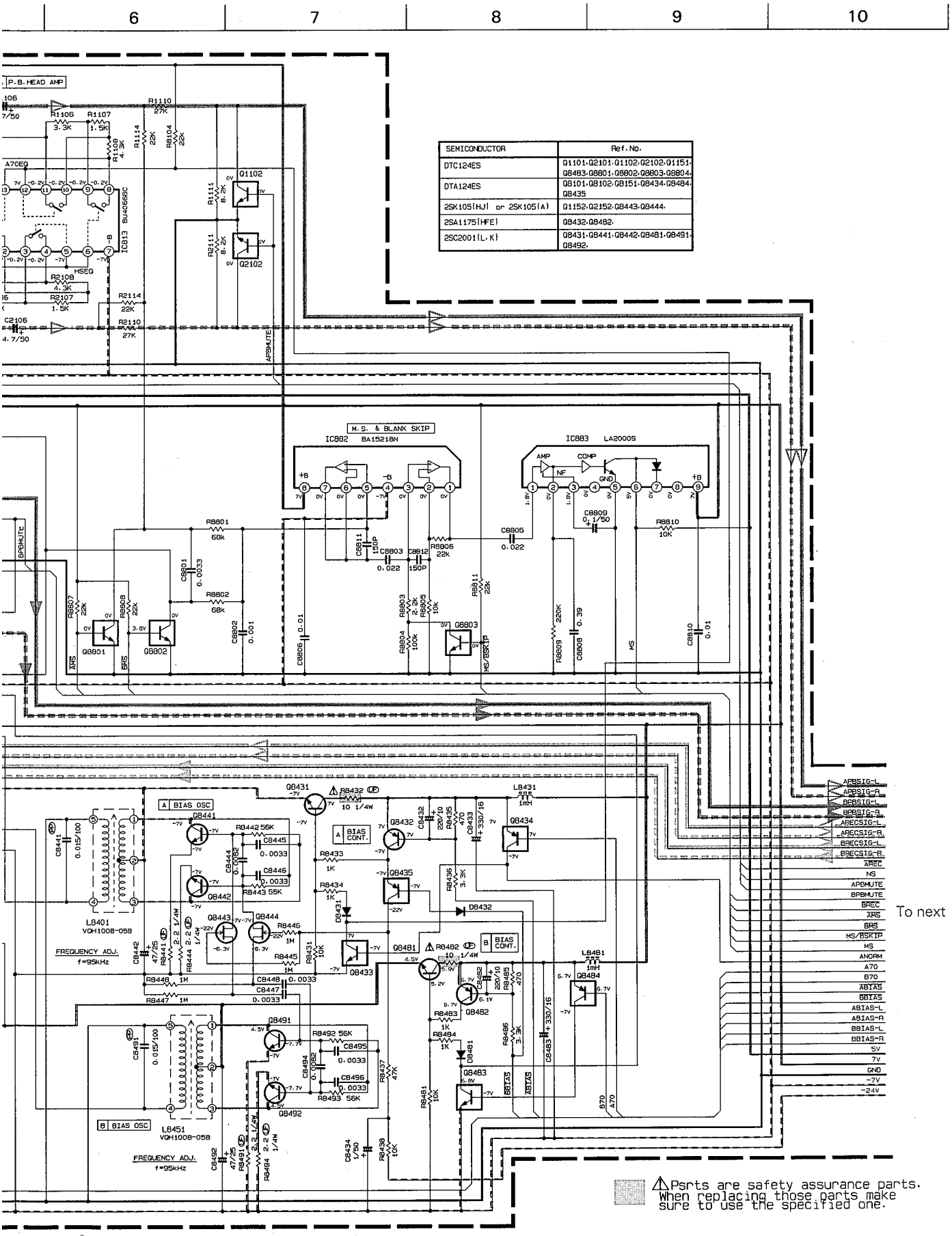

SEMICONDUCTOR	Ref.No.
DTC124ES	Q1101,Q2101,Q1102,Q2102,Q1151,Q8483,Q8801,Q8802,Q8803,Q8804,
DTA124ES	Q8101,Q8102,Q8151,Q8434,Q8484,Q8435
2SK105(HJ) or 2SK105(A)	Q1152,Q2152,Q8443,Q8444,
2SA1175(HFE)	Q8432,Q8482,
2SC2001(L,K)	Q8431,Q8441,Q8442,Q8481,Q8491,Q8492,

⚠Psrts are safety assurance parts. When replacing those parts make sure to use the specified one.

DECK B L R Recording signal for DECK A +B Line -B Line

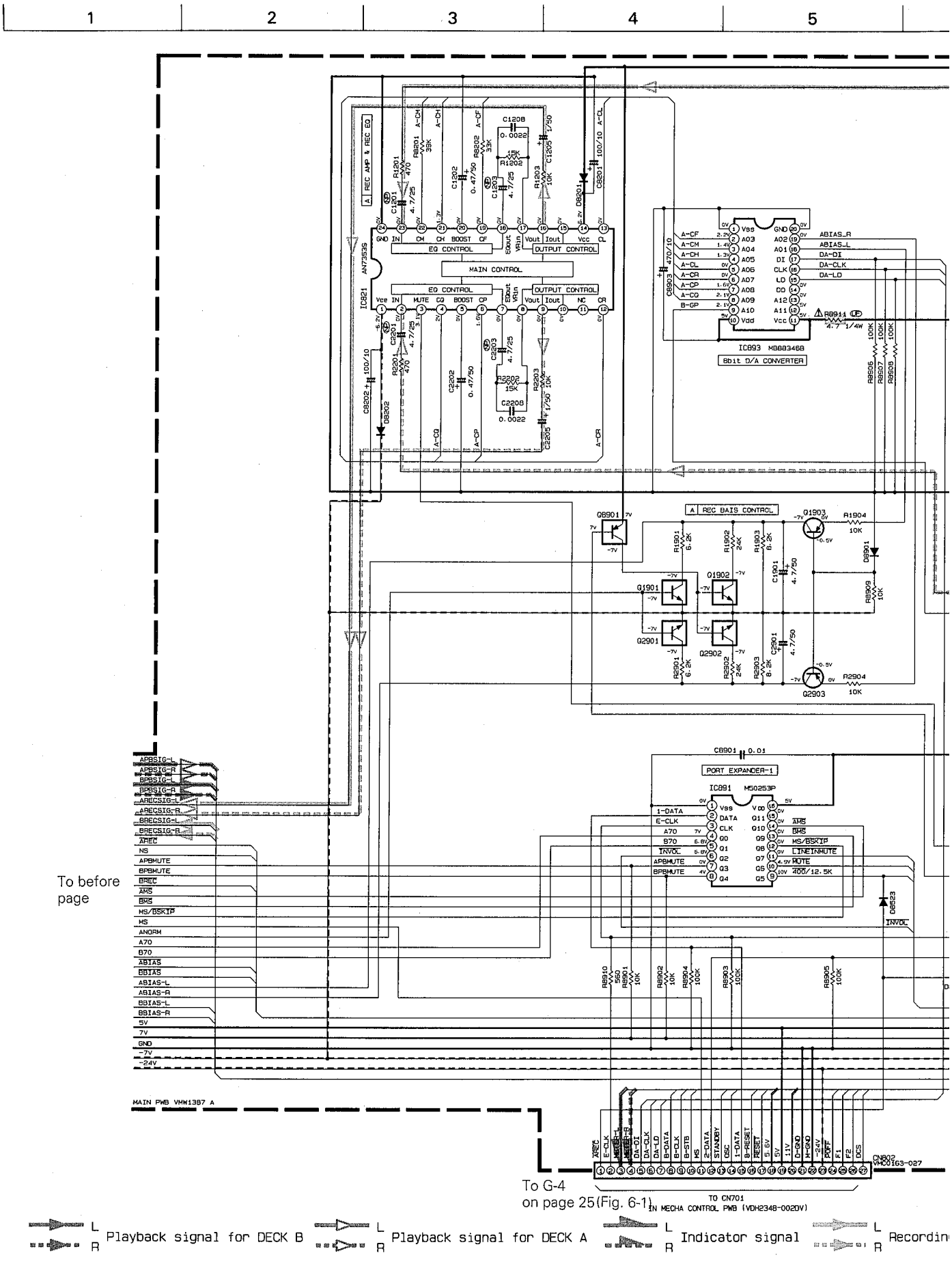

Note : VDH2348002BV

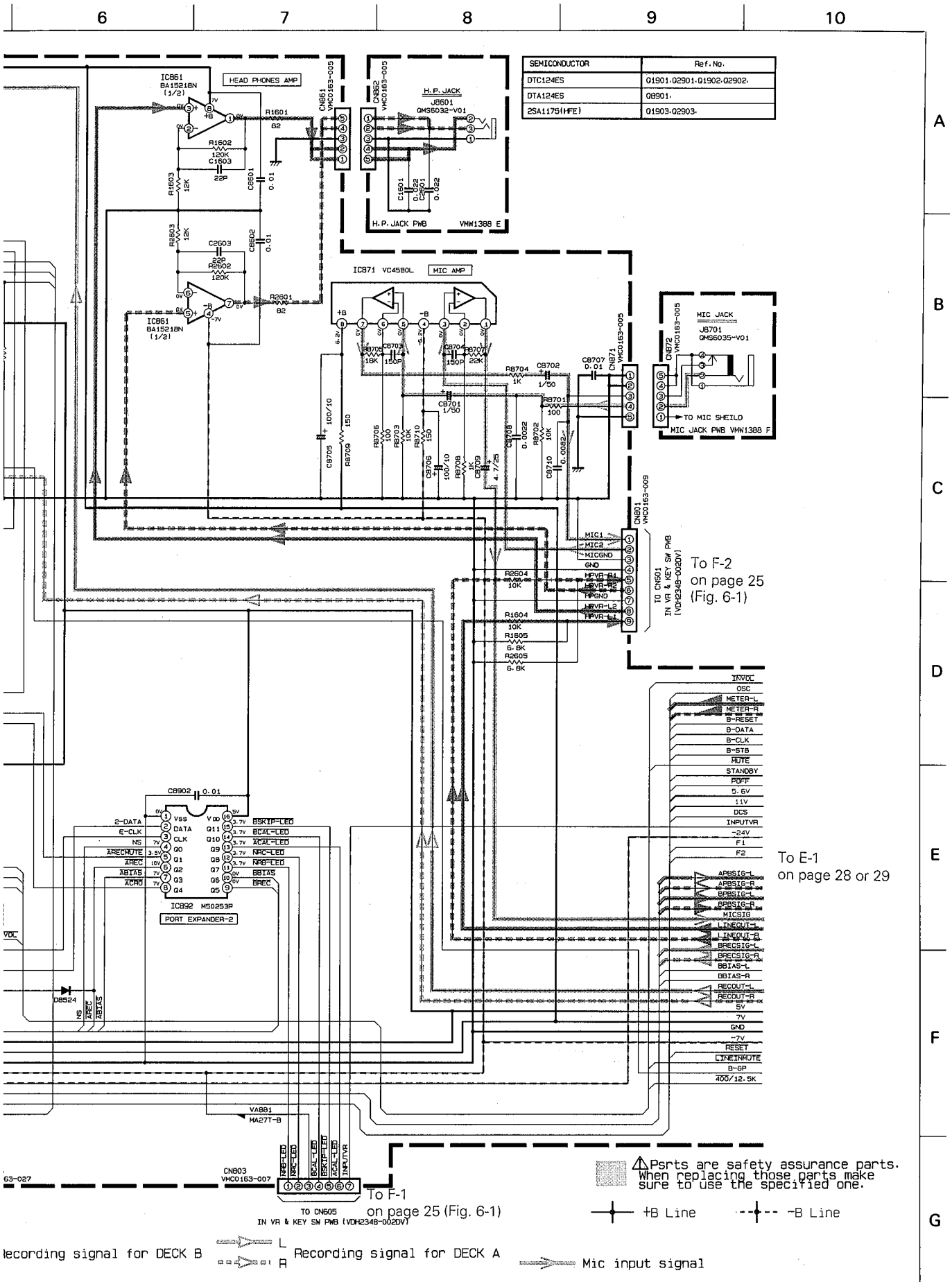

SEMICONDUCTOR	Ref. No.
DTC124ES	Q1901,Q2901,Q1902,Q2902,
DTA124ES	Q8901,
2SA1175(HFE)	Q1903,Q2903,

Fig. 6 – 3

■ C / J Version

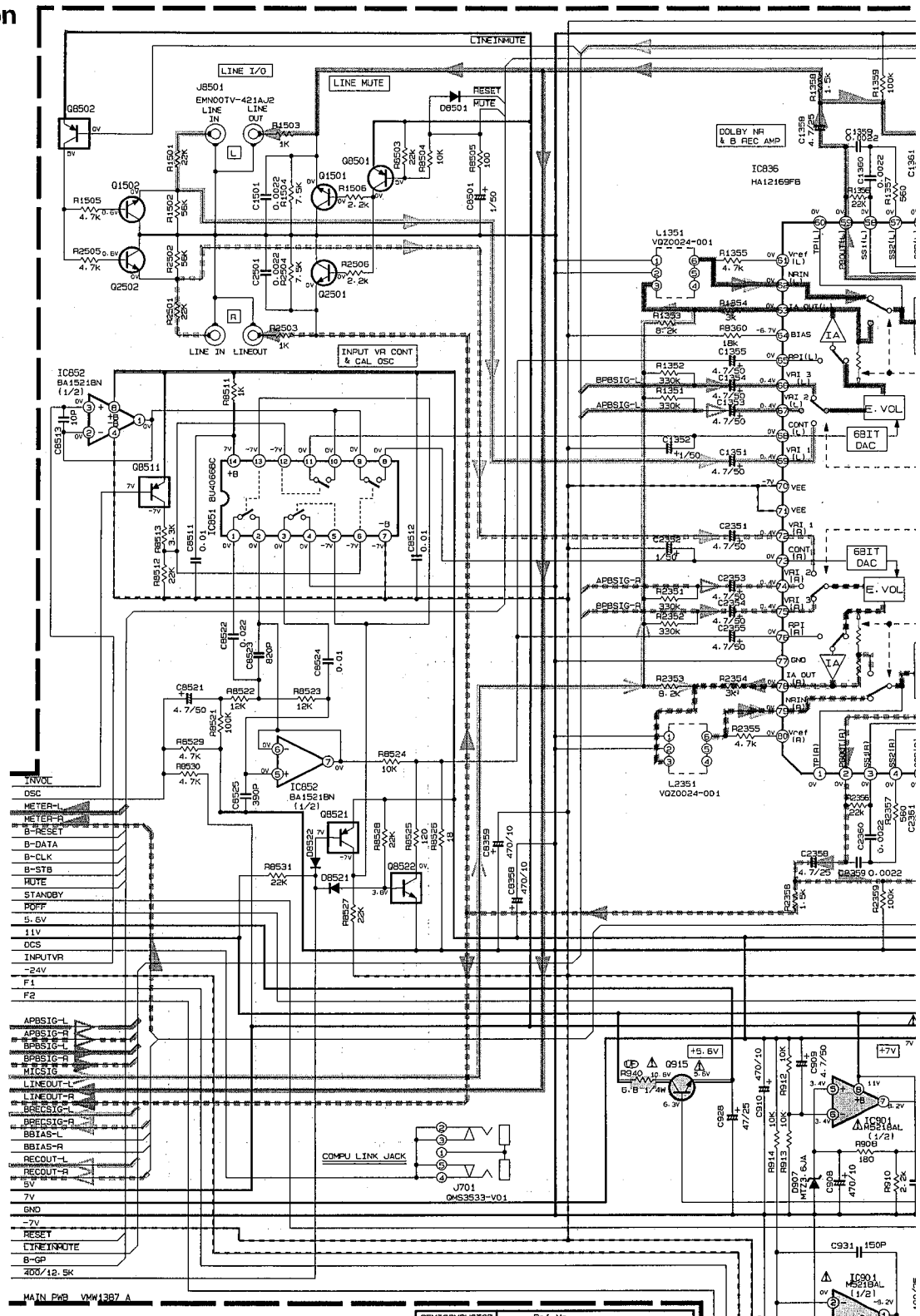

To E-10 on page 27

NOTES

1. VOLTAGES ARE DC-MEASURED WITH A DIGITAL VOLT METER WITHOUT INPUT SIGNAL.
   CONDITION: MODE : NORMAL SPEED DUBBING
   NR SW : OFF
   TAPE : A-B METAL
   REV. MODE SW :
2. UNLESS OTHERWISE SPECIFIED.
   ALL RESISTORS ARE 1/6W ±5% CARBON RESISTOR.
   ALL CAPACITORS ARE 50V CERAMIC CAPACITOR OR 50V MYLAR CAPACITOR.
   ALL RESISTANCE VALUES ARE IN OHM(Ω).
   ALL CAPACITANCE VALUES ARE IN μF(P=pF).
   ALL E.CAPACITORS ARE SHOWN IN THE FORM OF CAPACITANCE(μF)/RATED VOLTAGE (V).
   ALL DIODES ARE 1SS133 OR HSS104 OR MA165.

FUSIBLE RESISTOR
UNFLAMMABLE CARBON RESISTOR
NON-POLARISED ELECTROLYTIC CAPACITOR
POLYPROPYLENE CAPACITOR

SEMICONDUCTOR	Ref.No.
DTA124ES	Q8502,Q8511,Q8521.
DTC124ES	Q8522.
DTA143ES	Q913.
2SC1740S(RS)	Q1502,Q2502,Q8252,Q8253,Q910.
2SC2001(L,K)	Q1501,Q2501.
2SA1175(HFE)	Q8251,Q8254,Q8501.
2SB772(Q,P)	Q903,Q909.
2SD882(Q,P)	Q901.
2SD468(B,C)	Q915,Q912.
2SB647(CD)	Q905.
2SD2144S(VW)	Q907,Q908.

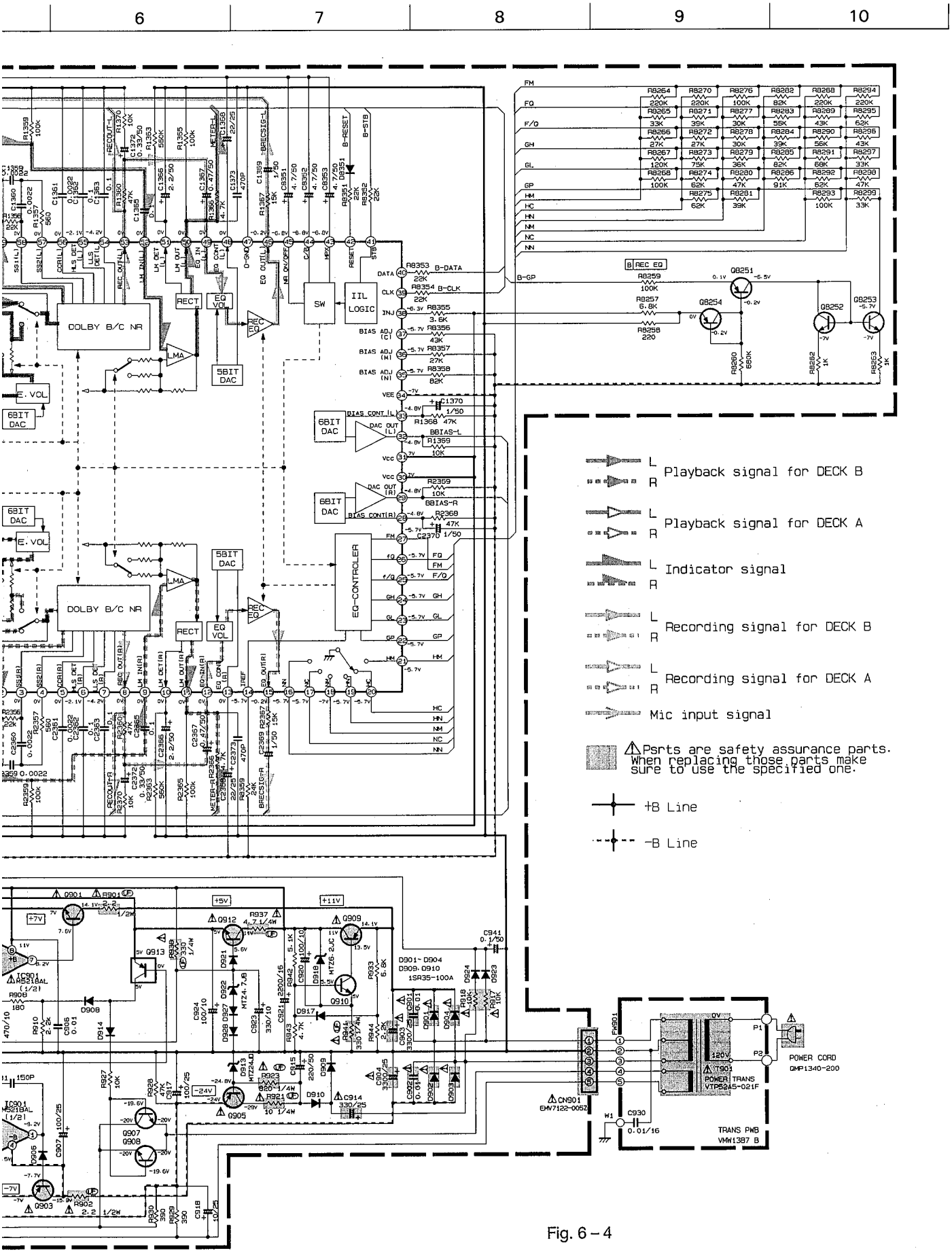
6
7
8
9
10
DOLBY B/C NR
RECT
EQ VOL
REC EQ
SW
IIL LOGIC
5BIT DAC
6BIT DAC
E. VOL
LMA
EQ-CONTROLER
B REC EQ
Playback signal for DECK B
Playback signal for DECK A
Indicator signal
Recording signal for DECK B
Recording signal for DECK A
Mic input signal
Psrts are safety assurance parts. When replacing those parts make sure to use the specified one.
+B Line
-B Line
POWER CORD
DMP1340-200
TRANS PWB
VMW1387 B

Fig. 6 – 4

■A / B / E / EN / G / U / UT Version

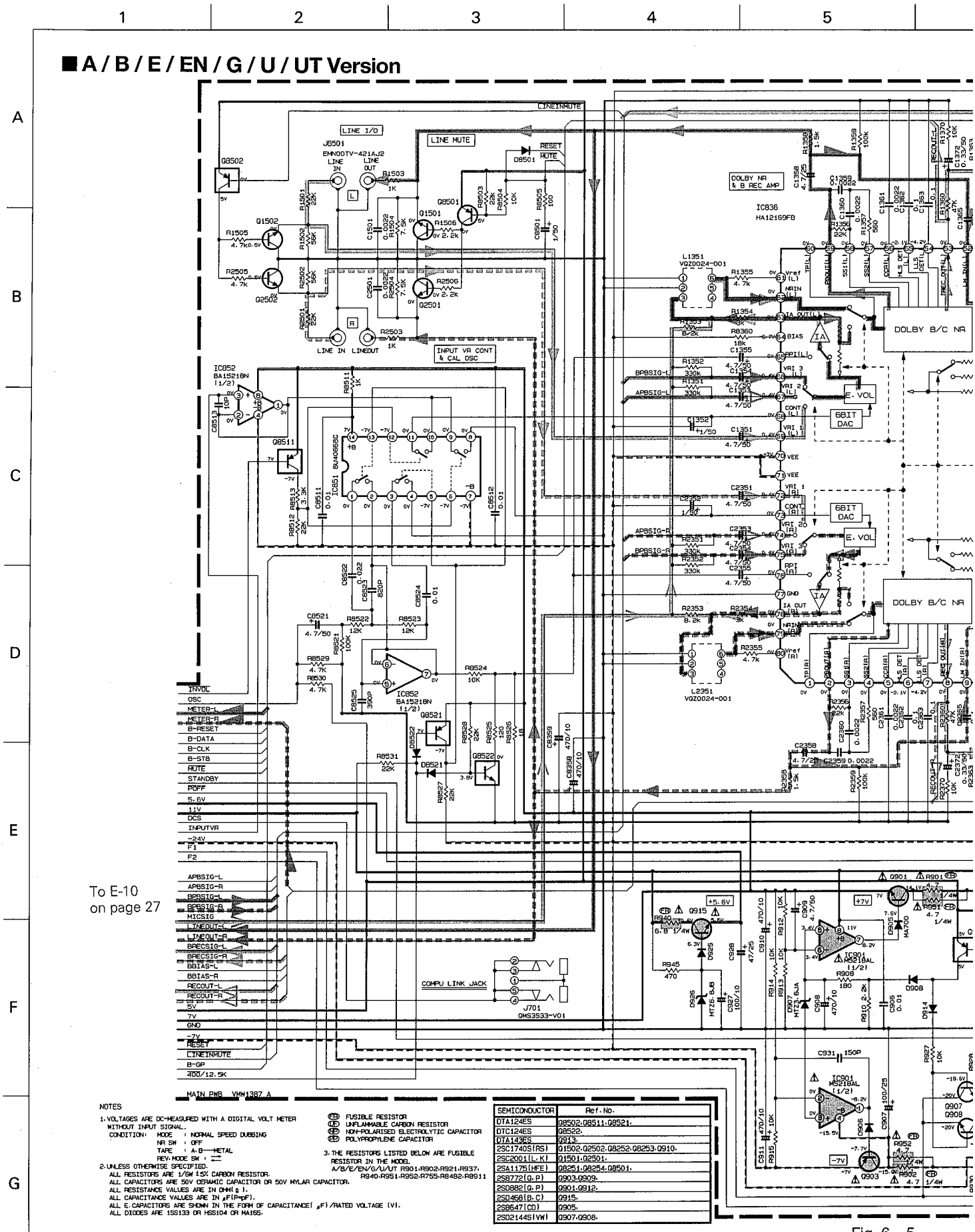

To E-10 on page 27

NOTES

1. VOLTAGES ARE DC-MEASURED WITH A DIGITAL VOLT METER WITHOUT INPUT SIGNAL.
   CONDITION: MODE : NORMAL SPEED DUBBING
   NR SW : OFF
   TAPE : A·B—METAL
   REV·MODE SW :
2. UNLESS OTHERWISE SPECIFIED.
   ALL RESISTORS ARE 1/6W ±5% CARBON RESISTOR.
   ALL CAPACITORS ARE 50V CERAMIC CAPACITOR OR 50V MYLAR CAPACITOR.
   ALL RESISTANCE VALUES ARE IN OHM(Ω).
   ALL CAPACITANCE VALUES ARE IN μF(P=pF).
   ALL E.CAPACITORS ARE SHOWN IN THE FORM OF CAPACITANCE(μF)/RATED VOLTAGE (V).
   ALL DIODES ARE 1SS133 OR HSS104 OR MA165.

FUSIBLE RESISTOR
UNFLAMMABLE CARBON RESISTOR
NON-POLARISED ELECTROLYTIC CAPACITOR
POLYPROPYLENE CAPACITOR

3. THE RESISTORS LISTED BELOW ARE FUSIBLE RESISTOR IN THE MODEL A/B/E/EN/G/U/UT R901·R902·R921·R937·R940·R951·R952·R755·R8482·R8911

SEMICONDUCTOR	Ref.No.
DTA124ES	Q8502·Q8511·Q8521·
DTC124ES	Q8522·
DTA143ES	Q913·
2SC1740S(RS)	Q1502·Q2502·Q8252·Q8253·Q910·
2SC2001(L,K)	Q1501·Q2501·
2SA1175(HFE)	Q8251·Q8254·Q8501·
2SB772(Q,P)	Q903·Q909·
2SD882(Q,P)	Q901·Q912·
2SD468(B,C)	Q915·
2SB647(CD)	Q905·
2SD2144S(VW)	Q907·Q908·

Fig. 6 – 5

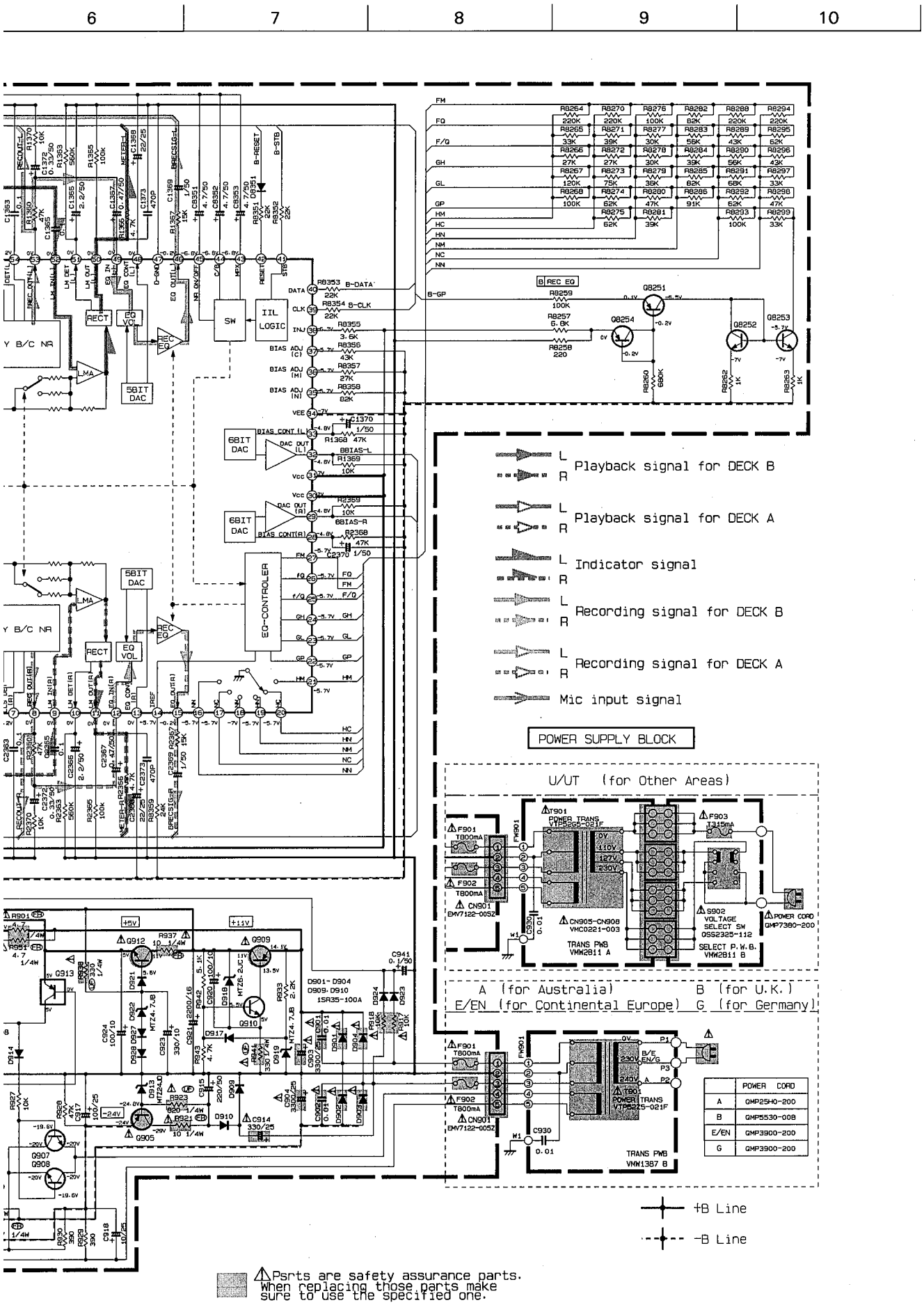
6
7
8
9
10
Playback signal for DECK B
Playback signal for DECK A
Indicator signal
Recording signal for DECK B
Recording signal for DECK A
Mic input signal
POWER SUPPLY BLOCK
U/UT (for Other Areas)
A (for Australia)
B (for U.K.)
E/EN (for Continental Europe)
G (for Germany)
POWER CORD
A QMP25H0-200
B QMP5530-008
E/EN QMP3900-200
G QMP3900-200
+B Line
-B Line
Psrts are safety assurance parts.
When replacing those parts make
sure to use the specified one.

7 Location of P.C. Board Parts and Parts List

■ Main Board Parts List

Main board

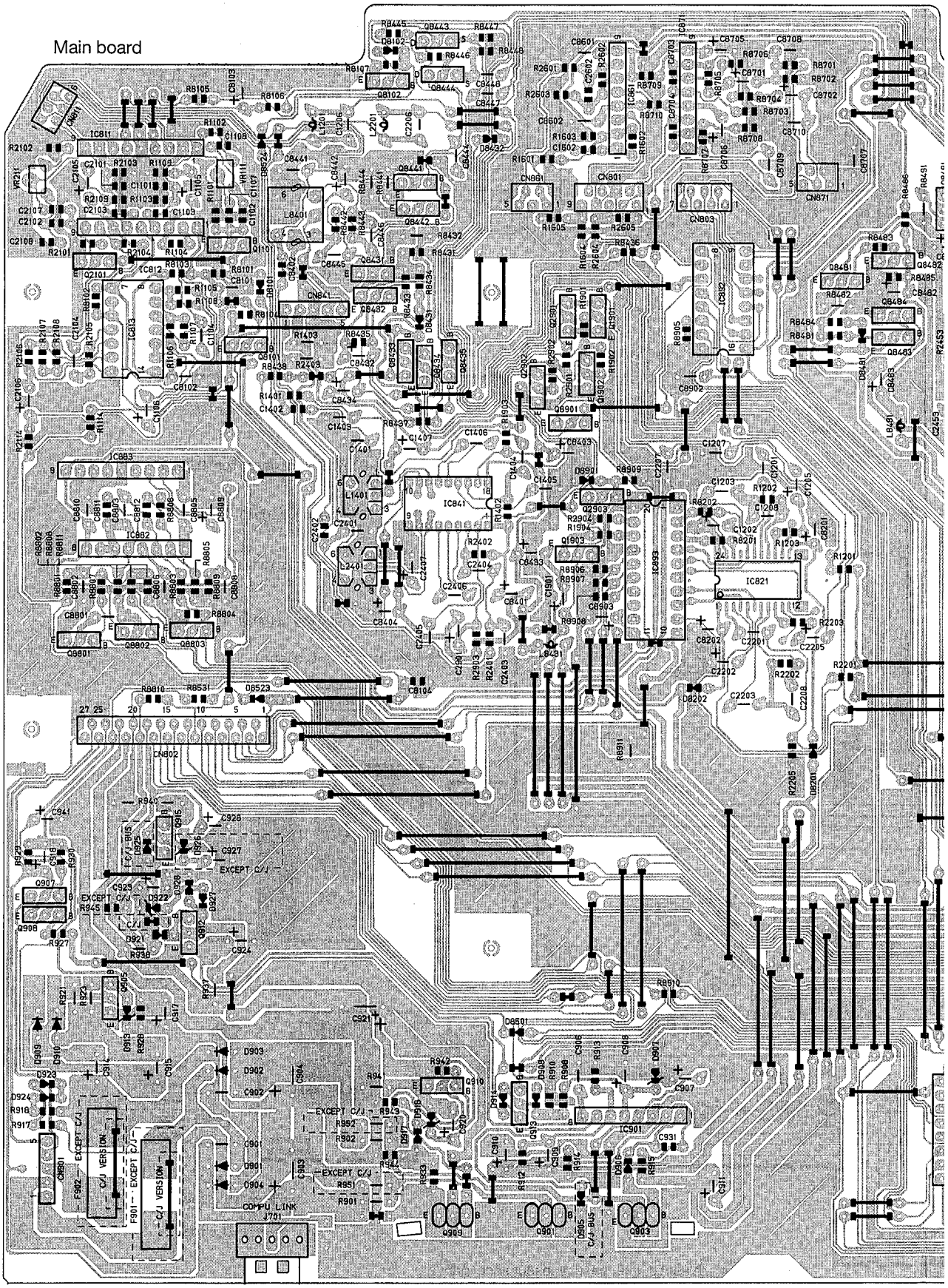

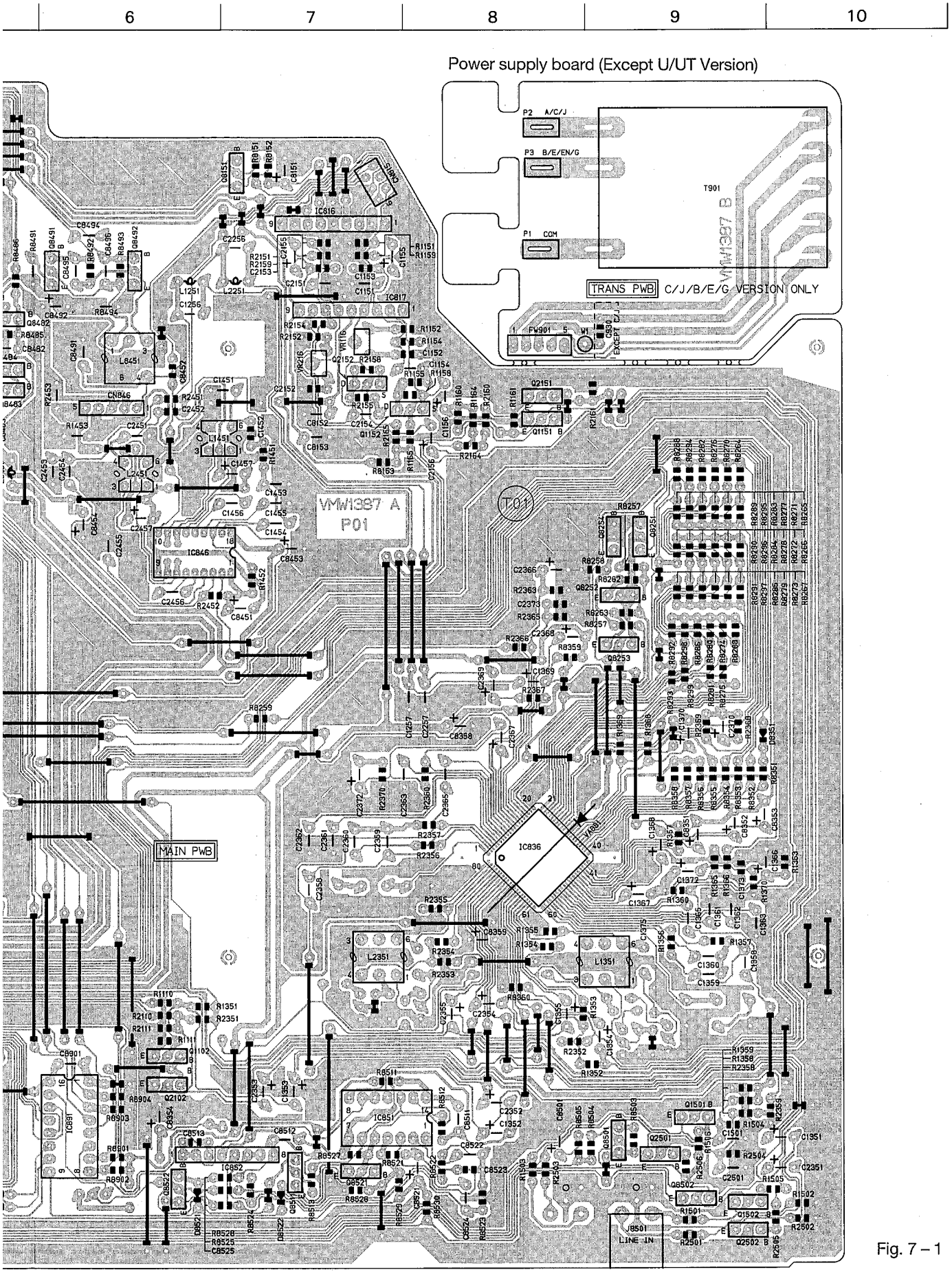
6
7
8
9
10
Power supply board (Except U/UT Version)
P2 A/C/J
P3 B/E/EN/G
P1 COM
T901
VMW1397 B
TRANS PWB
C/J/B/E/G VERSION ONLY
FW901
EXCEPT C/J
VMW1397 A
P01
T01
MAIN PWB
IC836
IC816
IC817
IC846
IC851
IC852
IC891
CN846
L8451
L2351
L1351
Q2151
Q1151
Q2102
Q1102
Q2501
Q1501
Q8502
Q1502
Q2502
J8501
LINE IN

Fig. 7 – 1

● Main Board Parts List

BLOCK NO. 01

⚠	REF.	PARTS NO.	PARTS NAME	REMARKS	SUFFIX
	C 901	QCF11HP-103	C.CAPACITOR	.010MF +100:-0%	
	C 902	QCF11HP-103	C.CAPACITOR	.010MF +100:-0%	
⚠	C 903	QETB1EM-338N	E.CAPACITOR	3300MF 20% 25V	
⚠	C 904	QETB1EM-338N	E.CAPACITOR	3300MF 20% 25V	
	C 906	QCF11HP-103	C.CAPACITOR	.010MF +100:-0%	
	C 907	QET41EM-107	E.CAPACITOR	100MF 20% 25V	
	C 908	QET41AM-477	E.CAPACITOR	470MF 20% 10V	
	C 909	QET41HM-475	E.CAPACITOR	4.7MF 20% 50V	
	C 910	QET41AM-477	E.CAPACITOR	470MF 20% 10V	
	C 911	QET41AM-477	E.CAPACITOR	470MF 20% 10V	
⚠	C 914	QETC1EM-337ZN	E.CAPACITOR	330MF 20% 25V	
	C 915	QETC1HM-227ZN	E.CAPACITOR	220MF 20% 50V	
	C 917	QET41EM-107	E.CAPACITOR	100MF 20% 25V	
	C 918	QET41EM-106	E.CAPACITOR	10MF 20% 25V	
	C 920	QET41AM-107	E.CAPACITOR	100MF 20% 10V	
	C 921	QETB1CM-228N	E.CAPACITOR	2200MF 20% 16V	
	C 923	QETC1AM-337ZN	E.CAPACITOR	330MF 20% 10V	
	C 924	QET41AM-107	E.CAPACITOR	100MF 20% 10V	
	C 927	QET41AM-107	E.CAPACITOR	100MF 20% 10V	A,B,E,EN
	C 927	QET41AM-107	E.CAPACITOR	100MF 20% 10V	G,U,UT
	C 928	QET41EM-476	E.CAPACITOR	47MF 20% 25V	
	C 930	QCVB1CM-103Y	C.CAPACITOR	.010MF 20% 16V	A,B,C,E
	C 930	QCVB1CM-103Y	CER.CAPACITOR	.010MF 20% 16V	EN,G,J
	C 931	QCBB1HK-151Y	C.CAPACITOR	150PF 10% 50V	
	C 941	QETC1HM-104ZN	E.CAPACITOR	.10MF 20% 50V	
	CN801	VMC0163-009	CONNECTOR		
	CN802	VMC0163-027	CONNECTOR		
	CN803	VMC0163-007	CONNECTOR		
	CN811	EMV7155-006R	CONNECTOR		
	CN815	EMV7155-006R	CONNECTOR		
	CN841	VMC0238-005Z	CONNECTOR		
	CN846	VMC0238-005Z	CONNECTOR		
	CN861	VMC0163-005	CONNECTOR		
	CN862	VMC0163-005	CONNECTOR		
	CN871	VMC0163-005	CONNECTOR		
	CN872	VMC0163-005	CONNECTOR		
	CN901	EMV7122-005Z	SOCKET		
	C1101	QCBB1HK-471Y	C.CAPACITOR	470PF 10% 50V	
	C1102	QCBB1HK-151Y	C.CAPACITOR	150PF 10% 50V	
	C1103	QCBB1HK-151Y	C.CAPACITOR	150PF 10% 50V	
	C1104	QFN41HJ-123	M.CAPACITOR	.012MF 5% 50V	
	C1105	QET41AM-227	E.CAPACITOR	220MF 20% 10V	
	C1106	QET41HM-475	E.CAPACITOR	4.7MF 20% 50V	
	C1107	QCBB1HK-471Y	C.CAPACITOR	470PF 10% 50V	
	C1108	QCBB1HK-151Y	C.CAPACITOR	150PF 10% 50V	
	C1151	QFN41HJ-102	M.CAPACITOR	1000PF 5% 50V	
	C1152	QCBB1HK-331Y	C.CAPACITOR	330PF 10% 50V	
	C1153	QCBB1HK-151Y	C.CAPACITOR	150PF 10% 50V	
	C1154	QFN41HJ-123	M.CAPACITOR	.012MF 5% 50V	
	C1155	QET41AM-227	E.CAPACITOR	220MF 20% 10V	
	C1156	QET41HM-475	E.CAPACITOR	4.7MF 20% 50V	
	C1201	QEN41EM-475	NP.E.CAPACITOR	4.7MF 20% 25V	
	C1202	QET41HM-474	E.CAPACITOR	.47MF 20% 50V	
	C1203	QEN41EM-475	NP.E.CAPACITOR	4.7MF 20% 25V	
	C1205	QET41HM-105	E.CAPACITOR	1.0MF 20% 50V	

BLOCK NO. 01

⚠	REF.	PARTS NO.	PARTS NAME	REMARKS	SUFFIX
	C1206	QCS32HJ-151ZV	C.CAPACITOR	150PF 5% 500V	
	C1207	QCS11HJ-471	C.CAPACITOR	470PF 5% 50V	
	C1208	QFN41HJ-222	M.CAPACITOR	2200PF 5% 50V	
	C1256	QCS32HJ-151ZV	C.CAPACITOR	150PF 5% 500V	
	C1257	QCS11HJ-471	C.CAPACITOR	470PF 5% 50V	
	C1351	QET41HM-475	E.CAPACITOR	4.7MF 20% 50V	
	C1352	QET41HM-105	E.CAPACITOR	1.0MF 20% 50V	
	C1353	QET41HM-475	E.CAPACITOR	4.7MF 20% 50V	
	C1354	QET41HM-475	E.CAPACITOR	4.7MF 20% 50V	
	C1355	QET41HM-475	E.CAPACITOR	4.7MF 20% 50V	
	C1358	QEN41EM-475	NP.E.CAPACITOR	4.7MF 20% 25V	
	C1359	QFN41HJ-222	M.CAPACITOR	2200PF 5% 50V	
	C1360	QFN41HJ-222	M.CAPACITOR	2200PF 5% 50V	
	C1361	QFN41HJ-222	M.CAPACITOR	2200PF 5% 50V	
	C1362	QFLC1HJ-104ZM	M.CAPACITOR	.10MF 5% 50V	
	C1363	QFLC1HJ-104ZM	M.CAPACITOR	.10MF 5% 50V	
	C1365	QFLC1HJ-104ZM	M.CAPACITOR	.10MF 5% 50V	
	C1366	QETC1HM-225ZN	E.CAPACITOR	2.2MF 20% 50V	
	C1367	QET41HM-474	E.CAPACITOR	.47MF 20% 50V	
	C1368	QETC1EM-226ZN	E.CAPACITOR	22MF 20% 25V	
	C1369	QET41HM-105	E.CAPACITOR	1.0MF 20% 50V	
	C1370	QET41HM-105	E.CAPACITOR	1.0MF 20% 50V	
	C1372	QETC1HM-334ZM	E CAPACITOR	.33MF 20% 50V	
	C1373	QCBB1HK-471Y	C.CAPACITOR	470PF 10% 50V	
	C1401	QFP32AJ-561ZM	PP.CAPACITOR	560PF 5% 100V	
	C1402	QCBB1HK-101Y	C.CAPACITOR	100PF 10% 50V	
	C1403	QCS11HJ-561	C.CAPACITOR	560PF 5% 50V	
	C1404	C1-PARTS838594	M.CAPACITOR	.010MF 5% 50V	
	C1405	QFLC1HJ-223ZM	M.CAPACITOR	.022MF 5% 50V	
	C1406	QFLC1HJ-393ZM	M.CAPACITOR	.039MF 5% 50V	
	C1407	QET41EM-106	E.CAPACITOR	10MF 20% 25V	
	C1451	QFP32AJ-561ZM	PP.CAPACITOR	560PF 5% 100V	
	C1452	QCBB1HK-101Y	C.CAPACITOR	100PF 10% 50V	
	C1453	QCS11HJ-561	C.CAPACITOR	560PF 5% 50V	
	C1454	C1-PARTS838594	M.CAPACITOR	.010MF 5% 50V	
	C1455	QFLC1HJ-223ZM	M.CAPACITOR	.022MF 5% 50V	
	C1456	QFLC1HJ-393ZM	M.CAPACITOR	.039MF 5% 50V	
	C1457	QET41EM-106	E.CAPACITOR	10MF 20% 25V	
	C1501	QCY31HK-222Z	C.CAPACITOR	2200PF 10% 50V	
	C1601	QCF11HP-223	C.CAPACITOR	.022MF +100:-0%	
	C1603	QCS11HJ-220	C.CAPACITOR	22PF 5% 50V	
	C1901	QET41HM-475	E.CAPACITOR	4.7MF 20% 50V	
	C2101	QCBB1HK-471Y	C.CAPACITOR	470PF 10% 50V	
	C2102	QCBB1HK-151Y	C.CAPACITOR	150PF 10% 50V	
	C2103	QCBB1HK-151Y	C.CAPACITOR	150PF 10% 50V	
	C2104	QFN41HJ-123	M.CAPACITOR	.012MF 5% 50V	
	C2105	QET41AM-227	E.CAPACITOR	220MF 20% 10V	
	C2106	QET41HM-475	E.CAPACITOR	4.7MF 20% 50V	
	C2107	QCBB1HK-471Y	C.CAPACITOR	470PF 10% 50V	
	C2108	QCBB1HK-151Y	C.CAPACITOR	150PF 10% 50V	
	C2151	QFN41HJ-102	M.CAPACITOR	1000PF 5% 50V	
	C2152	QCBB1HK-331Y	C.CAPACITOR	330PF 10% 50V	
	C2153	QCBB1HK-151Y	C.CAPACITOR	150PF 10% 50V	
	C2154	QFN41HJ-123	M.CAPACITOR	.012MF 5% 50V	
	C2155	QET41AM-227	E.CAPACITOR	220MF 20% 10V	

BLOCK NO. 01

⚠	REF.	PARTS NO.	PARTS NAME	REMARKS	SUFFIX
	C2156	QET41HM-475	E.CAPACITOR	4.7MF 20% 50V	
	C2201	QEN41EM-475	NP.E.CAPACITOR	4.7MF 20% 25V	
	C2202	QET41HM-474	E.CAPACITOR	.47MF 20% 50V	
	C2203	QEN41EM-475	NP.E.CAPACITOR	4.7MF 20% 25V	
	C2205	QET41HM-105	E.CAPACITOR	1.0MF 20% 50V	
	C2206	QCS32HJ-151ZV	C.CAPACITOR	150PF 5% 500V	
	C2207	QCS11HJ-471	C.CAPACITOR	470PF 5% 50V	
	C2208	QFN41HJ-222	M.CAPACITOR	2200PF 5% 50V	
	C2256	QCS32HJ-151ZV	C.CAPACITOR	150PF 5% 500V	
	C2257	QCS11HJ-471	C.CAPACITOR	470PF 5% 50V	
	C2351	QET41HM-475	E.CAPACITOR	4.7MF 20% 50V	
	C2352	QET41HM-105	E.CAPACITOR	1.0MF 20% 50V	
	C2353	QET41HM-475	E.CAPACITOR	4.7MF 20% 50V	
	C2354	QET41HM-475	E.CAPACITOR	4.7MF 20% 50V	
	C2355	QET41HM-475	E.CAPACITOR	4.7MF 20% 50V	
	C2358	QEN41EM-475	NP.E.CAPACITOR	4.7MF 20% 25V	
	C2359	QFN41HJ-222	M.CAPACITOR	2200PF 5% 50V	
	C2360	QFN41HJ-222	M.CAPACITOR	2200PF 5% 50V	
	C2361	QFN41HJ-222	M.CAPACITOR	2200PF 5% 50V	
	C2362	QFLC1HJ-104ZM	M.CAPACITOR	.10MF 5% 50V	
	C2363	QFLC1HJ-104ZM	M.CAPACITOR	.10MF 5% 50V	
	C2365	QFLC1HJ-104ZM	M.CAPACITOR	.10MF 5% 50V	
	C2366	QETC1HM-225ZN	E.CAPACITOR	2.2MF 20% 50V	
	C2367	QET41HM-474	E.CAPACITOR	.47MF 20% 50V	
	C2368	QETC1EM-226ZN	E.CAPACITOR	22MF 20% 25V	
	C2369	QET41HM-105	E.CAPACITOR	1.0MF 20% 50V	
	C2370	QET41HM-105	E.CAPACITOR	1.0MF 20% 50V	
	C2372	QETC1HM-334ZM	E CAPACITOR	.33MF 20% 50V	
	C2373	QCBB1HK-471Y	C.CAPACITOR	470PF 10% 50V	
	C2401	QFP32AJ-561ZM	PP.CAPACITOR	560PF 5% 100V	
	C2402	QCBB1HK-101Y	C.CAPACITOR	100PF 10% 50V	
	C2403	QCS11HJ-561	C.CAPACITOR	560PF 5% 50V	
	C2404	C1-PARTS838594	M.CAPACITOR	.010MF 5% 50V	
	C2405	QFLC1HJ-223ZM	M.CAPACITOR	.022MF 5% 50V	
	C2406	QFLC1HJ-393ZM	M.CAPACITOR	.039MF 5% 50V	
	C2407	QET41EM-106	E.CAPACITOR	10MF 20% 25V	
	C2451	QFP32AJ-561ZM	PP.CAPACITOR	560PF 5% 100V	
	C2452	QCBB1HK-101Y	C.CAPACITOR	100PF 10% 50V	
	C2453	QCS11HJ-561	C.CAPACITOR	560PF 5% 50V	
	C2454	C1-PARTS838594	M.CAPACITOR	.010MF 5% 50V	
	C2455	QFLC1HJ-223ZM	M.CAPACITOR	.022MF 5% 50V	
	C2456	QFLC1HJ-393ZM	M.CAPACITOR	.039MF 5% 50V	
	C2457	QET41EM-106	E.CAPACITOR	10MF 20% 25V	
	C2501	QCY31HK-222Z	C.CAPACITOR	2200PF 10% 50V	
	C2601	QCF11HP-223	C.CAPACITOR	.022MF +100:-0%	
	C2603	QCS11HJ-220	C.CAPACITOR	22PF 5% 50V	
	C2901	QET41HM-475	E.CAPACITOR	4.7MF 20% 50V	
	C8101	QCF11HP-103	C.CAPACITOR	.010MF +100:-0%	
	C8102	QCF11HP-103	C.CAPACITOR	.010MF +100:-0%	
	C8103	QET41AM-107	E.CAPACITOR	100MF 20% 10V	
	C8104	QCBB1HK-471Y	C.CAPACITOR	470PF 10% 50V	
	C8151	QET41AM-107	E.CAPACITOR	100MF 20% 10V	
	C8152	QCF11HP-103	C.CAPACITOR	.010MF +100:-0%	
	C8153	QCF11HP-103	C.CAPACITOR	.010MF +100:-0%	
	C8201	QET41AM-107	E.CAPACITOR	100MF 20% 10V	

BLOCK NO. 01

⚠	REF.	PARTS NO.	PARTS NAME	REMARKS	SUFFIX
	C8202	QET41AM-107	E.CAPACITOR	100MF 20% 10V	
	C8351	QET41HM-475	E.CAPACITOR	4.7MF 20% 50V	
	C8352	QET41HM-475	E.CAPACITOR	4.7MF 20% 50V	
	C8353	QET41HM-475	E.CAPACITOR	4.7MF 20% 50V	
	C8358	QET41AM-477	E.CAPACITOR	470MF 20% 10V	
	C8359	QET41AM-477	E.CAPACITOR	470MF 20% 10V	
	C8401	QET41EM-106	E.CAPACITOR	10MF 20% 25V	
	C8402	QCS11HJ-100	C.CAPACITOR	10PF 5% 50V	
	C8403	QET41AM-107	E.CAPACITOR	100MF 20% 10V	
	C8404	QET41AM-107	E.CAPACITOR	100MF 20% 10V	
	C8432	QET41AM-227	E.CAPACITOR	220MF 20% 10V	
	C8433	QETC1CM-337ZN	E.CAPACITOR	330MF 20% 16V	
	C8434	QET41HM-105	E.CAPACITOR	1.0MF 20% 50V	
	C8441	QFP32AJ-153ZM	PP.CAPACITOR	.015MF 5% 100V	
	C8442	QET41EM-476	E.CAPACITOR	47MF 20% 25V	
	C8444	QFN81HJ-822	M CAPACITOR	8200PF 5% 50V	
	C8445	QFN41HJ-332	M CAPACITOR	3300PF 5% 50V	
	C8446	QFN41HJ-332	M CAPACITOR	3300PF 5% 50V	
	C8447	QFN41HJ-332	M CAPACITOR	3300PF 5% 50V	
	C8448	QFN41HJ-332	M CAPACITOR	3300PF 5% 50V	
	C8451	QET41EM-106	E.CAPACITOR	10MF 20% 25V	
	C8452	QCS11HJ-100	C.CAPACITOR	10PF 5% 50V	
	C8453	QET41AM-107	E.CAPACITOR	100MF 20% 10V	
	C8454	QET41AM-107	E.CAPACITOR	100MF 20% 10V	
	C8482	QET41AM-227	E.CAPACITOR	220MF 20% 10V	
	C8483	QETC1CM-337ZN	E.CAPACITOR	330MF 20% 16V	
	C8491	QFP32AJ-153ZM	PP.CAPACITOR	.015MF 5% 100V	
	C8492	QET41EM-476	E.CAPACITOR	47MF 20% 25V	
	C8494	QFN81HJ-822	M CAPACITOR	8200PF 5% 50V	
	C8495	QFN41HJ-332	M CAPACITOR	3300PF 5% 50V	
	C8496	QFN41HJ-332	M CAPACITOR	3300PF 5% 50V	
	C8501	QET41HM-105	E.CAPACITOR	1.0MF 20% 50V	
	C8511	QCF11HP-103	C.CAPACITOR	.010MF +100:-0%	
	C8512	QCF11HP-103	C.CAPACITOR	.010MF +100:-0%	
	C8513	QCS11HJ-100	C.CAPACITOR	10PF 5% 50V	
	C8521	QET41HM-475	E.CAPACITOR	4.7MF 20% 50V	
	C8522	QFLC1HJ-223ZM	M.CAPACITOR	.022MF 5% 50V	
	C8523	QCBB1HK-821Y	C.CAPACITOR	820PF 10% 50V	
	C8524	C1-PARTS838594	M.CAPACITOR	.010MF 5% 50V	
	C8525	QCBB1HK-391Y	C.CAPACITOR	390PF 10% 50V	
	C8601	QCF11HP-103	C.CAPACITOR	.010MF +100:-0%	
	C8602	QCF11HP-103	C.CAPACITOR	.010MF +100:-0%	
	C8701	QET41HM-105	E.CAPACITOR	1.0MF 20% 50V	
	C8702	QET41HM-105	E.CAPACITOR	1.0MF 20% 50V	
	C8703	QCBB1HK-151Y	C.CAPACITOR	150PF 10% 50V	
	C8704	QCBB1HK-151Y	C.CAPACITOR	150PF 10% 50V	
	C8705	QET41AM-107	E.CAPACITOR	100MF 20% 10V	
	C8706	QET41AM-107	E.CAPACITOR	100MF 20% 10V	
	C8707	QCF11HP-103	C.CAPACITOR	.010MF +100:-0%	
	C8708	QFN41HJ-222	M.CAPACITOR	2200PF 5% 50V	
	C8709	QEN41EM-475	NP.E.CAPACITOR	4.7MF 20% 25V	
	C8710	QFLC1HJ-822ZM	M.CAPACITOR	8200PF 5% 50V	
	C8801	QFN41HJ-332	M CAPACITOR	3300PF 5% 50V	
	C8802	QFN41HJ-102	M.CAPACITOR	1000PF 5% 50V	
	C8803	QFLC1HJ-223ZM	M.CAPACITOR	.022MF 5% 50V	

BLOCK NO. 01

⚠	REF.	PARTS NO.	PARTS NAME	REMARKS	SUFFIX
	C8805	QFLC1HJ-223ZM	M.CAPACITOR	.022MF 5% 50V	
	C8806	QCF11HP-103	C.CAPACITOR	.010MF +100:-0%	
	C8808	QFV71HJ-394ZM	FILM CAPACITOR	.39MF 5% 50V	
	C8809	QETC1HM-104ZN	E.CAPACITOR	.10MF 20% 50V	
	C8810	QCF11HP-103	C.CAPACITOR	.010MF +100:-0%	
	C8811	QCBB1HK-151Y	C.CAPACITOR	150PF 10% 50V	
	C8812	QCBB1HK-151Y	C.CAPACITOR	150PF 10% 50V	
	C8901	QCF11HP-103	C.CAPACITOR	.010MF +100:-0%	
	C8902	QCF11HP-103	C.CAPACITOR	.010MF +100:-0%	
	C8903	QET41AM-477	E.CAPACITOR	470MF 20% 10V	
⚠	D 901	1SR35-100	SI DIODE		
⚠	D 902	1SR35-100	SI DIODE		
⚠	D 903	1SR35-100	SI DIODE		
⚠	D 904	1SR35-100	SI DIODE		
	D 905	MA700	ZENER DIODE		A,B,E,EN
	D 905	MA700	ZENER DIODE		G,U,UT
	D 906	1SS133	SI DIODE		
⚠	D 907	MTZ3.6JA	ZENER DIODE		
	D 908	1SS133	SI DIODE		
⚠	D 909	1SR35-100	SI DIODE		
⚠	D 910	1SR35-100	SI DIODE		
⚠	D 913	MTZ24JD	ZENER DIODE		
	D 914	1SS133	SI DIODE		
	D 917	1SS133	SI DIODE		
	D 918	MTZ6.2JC	ZENER DIODE		
	D 919	MTZ4.7JB	ZENER DIODE		A,B,E,EN
	D 919	MTZ4.7JB	ZENER DIODE		G,U,UT
	D 921	1SS133	SI DIODE		
⚠	D 922	MTZ4.7JB	ZENER DIODE		
	D 923	1SS133	SI DIODE		
	D 924	1SS133	SI DIODE		
	D 925	1SS133	SI DIODE		A,B,E,EN
	D 925	1SS133	SI DIODE		G,U,UT
	D 926	MTZ6.8JB	ZENER DIODE		G,U,UT
	D 926	MTZ6.8JB	ZENER DIODE		A,B,E,EN
	D 927	1SS133	SI DIODE		
	D 928	1SS133	SI DIODE		
	D8101	1SS133	SI DIODE		
	D8102	1SS133	SI DIODE		
	D8201	1SS133	SI DIODE		
	D8202	1SS133	SI DIODE		
	D8351	1SS133	SI DIODE		
	D8431	1SS133	SI DIODE		
	D8432	1SS133	SI DIODE		
	D8481	1SS133	SI DIODE		
	D8501	1SS133	SI DIODE		
	D8521	1SS133	SI DIODE		
	D8522	1SS133	SI DIODE		
	D8523	1SS133	SI DIODE		
	D8524	1SS133	SI DIODE		
	D8901	1SS133	SI DIODE		
⚠	HS901	VMH4011-201	HEAT SINK		
	IC811	UPC1330HA	IC	R/P SWITCH	
	IC812	AN6557F	IC	PB HEAD AMP.	
	IC813	BU4066B	IC	EQ SWITCH	

BLOCK NO. 01

⚠	REF.	PARTS NO.	PARTS NAME	REMARKS	SUFFIX
	IC816	UPC1330HA	IC	B PB/REC SWITCH	
	IC817	AN6557F	IC	B PB HEAD AMP.	
	IC821	AN7353S	IC	REC AMP AND EQ	
	IC836	HA12169FB	IC	DOLBY NR	
	IC841	UPC1297CA	IC	HX PRO A	
	IC846	UPC1297CA	IC	HX PRO B	
	IC851	BU4066B	IC	INPUT VOLUME CO	
	IC852	BA15218N	IC	BUFFER	
	IC861	BA15218N	IC	HEAD PHONE AMP	
	IC871	VC4580L	IC	MIC AMP.	
	IC882	BA15218N	IC		
	IC883	LA2000S	IC		
	IC891	M50253P	IC	PORT EXPANDER 1	
	IC892	M50253P	IC	PORT EXPANDER 2	
	IC893	MB88346B	IC	8BIT D/A COMBER	
⚠	IC901	M5218AL	IC	7V REGULATER	
	J 701	QMS3533-V01	JACK	COMPULINC	
	J8501	EMN00TV-421AJ2	PIN JACK		
	J8601	QMS6032-V01	JACK		
	J8701	QMS6035-V01	JACK		
	L1201	VQP0001-183	INDUCTOR		
	L1251	VQP0001-183	INDUCTOR		
	L1351	VQZ0024-001	FILTER		
	L1401	VQH7001-021	OSC COIL(BIAS)		
	L1451	VQH7001-021	OSC COIL(BIAS)		
	L2201	VQP0001-183	INDUCTOR		
	L2251	VQP0001-183	INDUCTOR		
	L2351	VQZ0024-001	FILTER		
	L2401	VQH7001-021	OSC COIL(BIAS)		
	L2451	VQH7001-021	OSC COIL(BIAS)		
	L8401	VQH1008-058	OSC COIL(BIAS)		
	L8431	VQP0001-102S	INDUCTOR		
	L8451	VQH1008-058	OSC COIL(BIAS)		
	L8481	VQP0001-102S	INDUCTOR		
⚠	P 1	VMZ0034-001	TAB	FOR POWER CORD	
⚠	P 2	VMZ0034-001	TAB	FOR POWER CORD	
⚠	P 3	VMZ0034-001	TAB	FOR POWER CORD	
⚠	Q 901	2SD882(P,Q)	TRANSISTOR		
⚠	Q 903	2SB772(Q,P)	TRANSISTOR		
⚠	Q 905	2SB647(CD)	TRANSISTOR		
	Q 907	2SD2144S(VW)	TRANSISTOR		
	Q 908	2SD2144S(VW)	TRANSISTOR		
⚠	Q 909	2SB772(Q,P)	TRANSISTOR		
	Q 910	2SC1740S(R,S)	TRANSISTOR		
⚠	Q 912	2SD468(C)	TRANSISTOR		C,J
⚠	Q 912	2SD882(P,Q)	TRANSISTOR		G,U,UT
⚠	Q 912	2SD882(P,Q)	TRANSISTOR		A,B,E,EN
	Q 913	DTA143ES	TRANSISTOR		
⚠	Q 915	2SD468(C)	TRANSISTOR		
	Q1101	DTC124ES	TRANSISTOR		
	Q1102	DTC124ES	TRANSISTOR		
	Q1151	DTC124ES	TRANSISTOR		
	Q1152	2SK105(E,F,H)	TRANSISTOR(FET)		
	Q1501	2SC2001(L,K)	TRANSISTOR		
	Q1502	2SC1740S(R,S)	TRANSISTOR		

BLOCK NO. 01

⚠	REF.	PARTS NO.	PARTS NAME	REMARKS	SUFFIX
	Q1901	DTC124ES	TRANSISTOR		
	Q1902	DTC124ES	TRANSISTOR		
	Q1903	2SA1175	TRANSISTOR		
	Q2101	DTC124ES	TRANSISTOR		
	Q2102	DTC124ES	TRANSISTOR		
	Q2151	DTC124ES	TRANSISTOR		
	Q2152	2SK105(E,F,H)	TRANSISTOR(FET)		
	Q2501	2SC2001(L,K)	TRANSISTOR		
	Q2502	2SC1740S(R,S)	TRANSISTOR		
	Q2901	DTC124ES	TRANSISTOR		
	Q2902	DTC124ES	TRANSISTOR		
	Q2903	2SA1175	TRANSISTOR		
	Q8101	DTA124ES	TRANSISTOR		
	Q8102	DTA124ES	TRANSISTOR		
	Q8151	DTA124ES	TRANSISTOR		
	Q8251	2SA1175	TRANSISTOR		
	Q8252	2SC1740S(R,S)	TRANSISTOR		
	Q8253	2SC1740S(R,S)	TRANSISTOR		
	Q8254	2SA1175	TRANSISTOR		
	Q8431	2SC2001(L,K)	TRANSISTOR		
	Q8432	2SA1175	TRANSISTOR		
	Q8433	DTC124ES	TRANSISTOR		
	Q8434	DTA124ES	TRANSISTOR		
	Q8435	DTA124ES	TRANSISTOR		
	Q8441	2SC2001(L,K)	TRANSISTOR		
	Q8442	2SC2001(L,K)	TRANSISTOR		
	Q8443	2SK105(E,F,H)	TRANSISTOR(FET)		
	Q8444	2SK105(E,F,H)	TRANSISTOR(FET)		
	Q8481	2SC2001(L,K)	TRANSISTOR		
	Q8482	2SA1175	TRANSISTOR		
	Q8483	DTC124ES	TRANSISTOR		
	Q8484	DTA124ES	TRANSISTOR		
	Q8491	2SC2001(L,K)	TRANSISTOR		
	Q8492	2SC2001(L,K)	TRANSISTOR		
	Q8501	2SA1175	TRANSISTOR		
	Q8502	DTA124ES	TRANSISTOR		
	Q8511	DTA124ES	TRANSISTOR		
	Q8521	DTA124ES	TRANSISTOR		
	Q8522	DTC124ES	TRANSISTOR		
	Q8801	DTC124ES	TRANSISTOR		
	Q8802	DTC124ES	TRANSISTOR		
	Q8803	DTC124ES	TRANSISTOR		
	Q8901	DTA124ES	TRANSISTOR		
⚠	R 901	QRZ0077-4R7X	FUSE RESISTOR	4.7	G,U,UT
⚠	R 901	QRZ0077-4R7X	FUSE RESISTOR	4.7	A,B,E,EN
⚠	R 901	QRD12CJ-2R2SX	CARBON RESISTOR	2.2 5% 1/2W	C,J
⚠	R 902	QRD12CJ-2R2SX	CARBON RESISTOR	2.2 5% 1/2W	C,J
⚠	R 902	QRZ0077-4R7X	FUSE RESISTOR	4.7	G,U,UT
⚠	R 902	QRZ0077-4R7X	FUSE RESISTOR	4.7 1/0W	A,B,E,EN
	R 908	QRD161J-181	CARBON RESISTOR	180 5% 1/6W	
	R 910	QRD161J-222	CARBON RESISTOR	2.2K 5% 1/6W	
	R 912	QRD161J-103	CARBON RESISTOR	10K 5% 1/6W	
	R 913	QRD161J-103	CARBON RESISTOR	10K 5% 1/6W	
	R 914	QRD161J-103	CARBON RESISTOR	10K 5% 1/6W	
	R 915	QRD161J-103	CARBON RESISTOR	10K 5% 1/6W	

BLOCK NO. 01

⚠	REF.	PARTS NO.	PARTS NAME	REMARKS	SUFFIX
	R 917	QRD161J-103	CARBON RESISTOR	10K 5% 1/6W	
	R 918	QRD161J-103	CARBON RESISTOR	10K 5% 1/6W	
⚠	R 921	QRD14CJ-100SX	CARBON RESISTOR	10 5% 1/4W	C,J
⚠	R 921	QRZ0077-100X	FUSI.RESISTOR	10	G,U,UT
⚠	R 921	QRZ0077-100X	FUSI.RESISTOR	10	A,B,E,EN
	R 923	QRD14CJ-821SX	CARBON RESISTOR	820 5% 1/4W	G,U,UT
	R 923	QRD14CJ-821SX	CARBON RESISTOR	820 5% 1/4W	A,B,E,EN
	R 923	QRD161J-821	CARBON RESISTOR	820 5% 1/6W	C,J
	R 927	QRD161J-103	CARBON RESISTOR	10K 5% 1/6W	
	R 928	QRD161J-473	CARBON RESISTOR	47K 5% 1/6W	
	R 929	QRD161J-391	CARBON RESISTOR	390 5% 1/6W	
	R 930	QRD161J-391	CARBON RESISTOR	390 5% 1/6W	
	R 933	QRD161J-222	CARBON RESISTOR	2.2K 5% 1/6W	A,B,E,EN
	R 933	QRD161J-222	CARBON RESISTOR	2.2K 5% 1/6W	G,U,UT
	R 933	QRD167J-682	CRABON RESISTOR	6.8K 5% 1/6W	C,J
⚠	R 937	QRZ0077-100X	FUSI.RESISTOR	10	G,U,UT
⚠	R 937	QRD14CJ-4R7SX	UNF.C.RESISTOR	4.7 5% 1/4W	C,J
⚠	R 937	QRZ0077-100X	FUSE RESISTOR	10 1/0W	A,B,E,EN
	R 938	QRD14CJ-331SX	CARBON RESISTOR	330 5% 1/4W	
⚠	R 940	QRD14CJ-6R8SX	CARBON RESISTOR	6.8 5% 1/4W	C,J
⚠	R 940	QRH144J-6R8	FUSI.RESISTOR	6.8 5% 1/4W	G,U,UT
⚠	R 940	QRH144J-6R8	FUSI.RESISTOR	6.8 5% 1/4W	A,B,E,EN
⚠	R 941	QRD14CJ-331SX	CARBON RESISTOR	330 5% 1/4W	
	R 942	QRD161J-512	CARBON RESISTOR	5.1K 5% 1/6W	
	R 943	QRD161J-472	CARBON RESISTOR	4.7K 5% 1/6W	
	R 944	QRD161J-222	CARBON RESISTOR	2.2K 5% 1/6W	
	R 944	QRD161J-222	CARBON RESISTOR	2.2K 5% 1/6W	C,J
	R 945	QRD161J-471	CARBON RESISTOR	470 5% 1/6W	
	R 945	QRD161J-471	CARBON RESISTOR	470 5% 1/6W	
⚠	R 951	QRZ0077-4R7X	FUSE RESISTOR	4.7 1/0W	A,B,E,EN
⚠	R 951	QRZ0077-4R7X	CARBON RESISTOR	4.7	G,U,UT
⚠	R 952	QRZ0077-4R7X	CARBON RESISTOR	4.7	G,U,UT
⚠	R 952	QRZ0077-4R7X	FUSE RESISTOR	4.7 1/0W	A,B,E,EN
	R1101	QRD161J-105	CARBON RESISTOR	1.0M 5% 1/6W	
	R1102	QRD161J-472	CARBON RESISTOR	4.7K 5% 1/6W	
	R1104	QRD161J-274	CARBON RESISTOR	270K 5% 1/6W	
	R1105	QRD161J-242	CARBON RESISTOR	2.4K 5% 1/6W	
	R1106	QRD167J-332	CARBON RESISTOR	3.3K 5% 1/6W	
	R1107	QRD161J-152	CARBON RESISTOR	1.5K 5% 1/6W	
	R1108	QRD161J-432	CARBON RESISTOR	4.3K 5% 1/6W	
	R1109	QRD161J-470	CARBON RESISTOR	47 5% 1/6W	
	R1110	QRD161J-273	CARBON RESISTOR	27K 5% 1/6W	
	R1111	QRD161J-822	CARBON RESISTOR	8.2K 5% 1/6W	
	R1114	QRD161J-223	CARBON RESISTOR	22K 5% 1/6W	
	R1152	QRD161J-472	CARBON RESISTOR	4.7K 5% 1/6W	
	R1154	QRD161J-274	CARBON RESISTOR	270K 5% 1/6W	
	R1155	QRD167J-682	CARBON RESISTOR	6.8K 5% 1/6W	
	R1158	QRD161J-472	CARBON RESISTOR	4.7K 5% 1/6W	
	R1159	QRD161J-470	CARBON RESISTOR	47 5% 1/6W	
	R1160	QRD161J-273	CARBON RESISTOR	27K 5% 1/6W	
	R1161	QRD161J-822	CARBON RESISTOR	8.2K 5% 1/6W	
	R1164	QRD161J-223	CARBON RESISTOR	22K 5% 1/6W	
	R1165	QRD161J-105	CARBON RESISTOR	1.0M 5% 1/6W	
	R1201	QRD161J-471	CARBON RESISTOR	470 5% 1/6W	
	R1202	QRD161J-153	CARBON RESISTOR	15K 5% 1/6W	

BLOCK NO. 01

⚠	REF.	PARTS NO.	PARTS NAME	REMARKS	SUFFIX
	R1203	QRD161J-103	CARBON RESISTOR	10K 5% 1/6W	
	R1351	QRD161J-334	CARBON RESISTOR	330K 5% 1/6W	
	R1352	QRD161J-334	CARBON RESISTOR	330K 5% 1/6W	
	R1353	QRD161J-822	CARBON RESISTOR	8.2K 5% 1/6W	
	R1354	QRD161J-302	CARBON RESISTOR	3.0K 5% 1/6W	
	R1355	QRD161J-472	CARBON RESISTOR	4.7K 5% 1/6W	
	R1356	QRD161J-223	CARBON RESISTOR	22K 5% 1/6W	
	R1357	QRD161J-561	CARBON RESISTOR	560 5% 1/6W	
	R1358	QRD161J-152	CARBON RESISTOR	1.5K 5% 1/6W	
	R1359	QRD161J-104	CARBON RESISTOR	100K 5% 1/6W	
	R1360	QRD161J-473	CARBON RESISTOR	47K 5% 1/6W	
	R1363	QRD161J-564	CARBON RESISTOR	560K 5% 1/6W	
	R1365	QRD161J-104	CARBON RESISTOR	100K 5% 1/6W	
	R1366	QRD161J-472	CARBON RESISTOR	4.7K 5% 1/6W	
	R1367	QRD161J-153	CARBON RESISTOR	15K 5% 1/6W	
	R1368	QRD161J-473	CARBON RESISTOR	47K 5% 1/6W	
	R1369	QRD161J-103	CARBON RESISTOR	10K 5% 1/6W	
	R1370	QRD161J-103	CARBON RESISTOR	10K 5% 1/6W	
	R1401	QRD161J-274	CARBON RESISTOR	270K 5% 1/6W	
	R1402	QRD161J-333	CARBON RESISTOR	33K 5% 1/6W	
⚠	R1403	QRD14CJ-100SX	CARBON RESISTOR	10 5% 1/4W	
	R1451	QRD161J-274	CARBON RESISTOR	270K 5% 1/6W	
	R1452	QRD161J-333	CARBON RESISTOR	33K 5% 1/6W	
⚠	R1453	QRD14CJ-100SX	CARBON RESISTOR	10 5% 1/4W	
	R1501	QRD161J-223	CARBON RESISTOR	22K 5% 1/6W	
	R1502	QRD161J-563	CARBON RESISTOR	56K 5% 1/6W	
	R1503	QRD161J-102	CARBON RESISTOR	1.0K 5% 1/6W	
	R1504	QRD161J-752	CARBON RESISTOR	7.5K 5% 1/6W	
	R1505	QRD161J-472	CARBON RESISTOR	4.7K 5% 1/6W	
	R1506	QRD161J-222	CARBON RESISTOR	2.2K 5% 1/6W	
	R1601	QRD161J-820	CARBON RESISTOR	82 5% 1/6W	
	R1602	QRD161J-124	CARBON RESISTOR	120K 5% 1/6W	
	R1603	QRD161J-123	CARBON RESISTOR	12K 5% 1/6W	
	R1604	QRD161J-103	CARBON RESISTOR	10K 5% 1/6W	
	R1605	QRD167J-682	CARBON RESISTOR	6.8K 5% 1/6W	
	R1901	QRD161J-622	CARBON RESISTOR	6.2K 5% 1/6W	
	R1902	QRD161J-243	CARBON RESISTOR	24K 5% 1/6W	
	R1903	QRD161J-822	CARBON RESISTOR	8.2K 5% 1/6W	
	R1904	QRD161J-103	CARBON RESISTOR	10K 5% 1/6W	
	R2101	QRD161J-105	CARBON RESISTOR	1.0M 5% 1/6W	
	R2102	QRD161J-472	CARBON RESISTOR	4.7K 5% 1/6W	
	R2104	QRD161J-274	CARBON RESISTOR	270K 5% 1/6W	
	R2105	QRD161J-242	CARBON RESISTOR	2.4K 5% 1/6W	
	R2106	QRD167J-332	CARBON RESISTOR	3.3K 5% 1/6W	
	R2107	QRD161J-152	CARBON RESISTOR	1.5K 5% 1/6W	
	R2108	QRD161J-432	CARBON RESISTOR	4.3K 5% 1/6W	
	R2109	QRD161J-470	CARBON RESISTOR	47 5% 1/6W	
	R2110	QRD161J-273	CARBON RESISTOR	27K 5% 1/6W	
	R2111	QRD161J-822	CARBON RESISTOR	8.2K 5% 1/6W	
	R2114	QRD161J-223	CARBON RESISTOR	22K 5% 1/6W	
	R2152	QRD161J-472	CARBON RESISTOR	4.7K 5% 1/6W	
	R2154	QRD161J-274	CARBON RESISTOR	270K 5% 1/6W	
	R2155	QRD167J-682	CARBON RESISTOR	6.8K 5% 1/6W	
	R2158	QRD161J-472	CARBON RESISTOR	4.7K 5% 1/6W	
	R2159	QRD161J-470	CARBON RESISTOR	47 5% 1/6W	

BLOCK NO. 01

⚠	REF.	PARTS NO.	PARTS NAME	REMARKS	SUFFIX
	R2160	QRD161J-273	CARBON RESISTOR	27K 5% 1/6W	
	R2161	QRD161J-822	CARBON RESISTOR	8.2K 5% 1/6W	
	R2164	QRD161J-223	CARBON RESISTOR	22K 5% 1/6W	
	R2165	QRD161J-105	CARBON RESISTOR	1.0M 5% 1/6W	
	R2201	QRD161J-471	CARBON RESISTOR	470 5% 1/6W	
	R2202	QRD161J-153	CARBON RESISTOR	15K 5% 1/6W	
	R2203	QRD161J-103	CARBON RESISTOR	10K 5% 1/6W	
	R2351	QRD161J-334	CARBON RESISTOR	330K 5% 1/6W	
	R2352	QRD161J-334	CARBON RESISTOR	330K 5% 1/6W	
	R2353	QRD161J-822	CARBON RESISTOR	8.2K 5% 1/6W	
	R2354	QRD161J-302	CARBON RESISTOR	3.0K 5% 1/6W	
	R2355	QRD161J-472	CARBON RESISTOR	4.7K 5% 1/6W	
	R2356	QRD161J-223	CARBON RESISTOR	22K 5% 1/6W	
	R2357	QRD161J-561	CARBON RESISTOR	560 5% 1/6W	
	R2358	QRD161J-152	CARBON RESISTOR	1.5K 5% 1/6W	
	R2359	QRD161J-104	CARBON RESISTOR	100K 5% 1/6W	
	R2360	QRD161J-473	CARBON RESISTOR	47K 5% 1/6W	
	R2363	QRD161J-564	CARBON RESISTOR	560K 5% 1/6W	
	R2365	QRD161J-104	CARBON RESISTOR	100K 5% 1/6W	
	R2366	QRD161J-472	CARBON RESISTOR	4.7K 5% 1/6W	
	R2367	QRD161J-153	CARBON RESISTOR	15K 5% 1/6W	
	R2368	QRD161J-473	CARBON RESISTOR	47K 5% 1/6W	
	R2369	QRD161J-103	CARBON RESISTOR	10K 5% 1/6W	
	R2370	QRD161J-103	CARBON RESISTOR	10K 5% 1/6W	
	R2401	QRD161J-274	CARBON RESISTOR	270K 5% 1/6W	
	R2402	QRD161J-333	CARBON RESISTOR	33K 5% 1/6W	
⚠	R2403	QRD14CJ-100SX	CARBON RESISTOR	10 5% 1/4W	
	R2451	QRD161J-274	CARBON RESISTOR	270K 5% 1/6W	
	R2452	QRD161J-333	CARBON RESISTOR	33K 5% 1/6W	
⚠	R2453	QRD14CJ-100SX	CARBON RESISTOR	10 5% 1/4W	
	R2501	QRD161J-223	CARBON RESISTOR	22K 5% 1/6W	
	R2502	QRD161J-563	CARBON RESISTOR	56K 5% 1/6W	
	R2503	QRD161J-102	CARBON RESISTOR	1.0K 5% 1/6W	
	R2504	QRD161J-752	CARBON RESISTOR	7.5K 5% 1/6W	
	R2505	QRD161J-472	CARBON RESISTOR	4.7K 5% 1/6W	
	R2506	QRD161J-222	CARBON RESISTOR	2.2K 5% 1/6W	
	R2601	QRD161J-820	CARBON RESISTOR	82 5% 1/6W	
	R2602	QRD161J-124	CARBON RESISTOR	120K 5% 1/6W	
	R2603	QRD161J-123	CARBON RESISTOR	12K 5% 1/6W	
	R2604	QRD161J-103	CARBON RESISTOR	10K 5% 1/6W	
	R2605	QRD167J-682	CARBON RESISTOR	6.8K 5% 1/6W	
	R2901	QRD161J-622	CARBON RESISTOR	6.2K 5% 1/6W	
	R2902	QRD161J-243	CARBON RESISTOR	24K 5% 1/6W	
	R2903	QRD161J-822	CARBON RESISTOR	8.2K 5% 1/6W	
	R2904	QRD161J-103	CARBON RESISTOR	10K 5% 1/6W	
	R8101	QRD161J-223	CARBON RESISTOR	22K 5% 1/6W	
	R8102	QRD161J-223	CARBON RESISTOR	22K 5% 1/6W	
	R8103	QRD161J-102	CARBON RESISTOR	1.0K 5% 1/6W	
	R8104	QRD161J-223	CARBON RESISTOR	22K 5% 1/6W	
	R8105	QRD161J-223	CARBON RESISTOR	22K 5% 1/6W	
	R8106	QRD161J-101	CARBON RESISTOR	100 5% 1/6W	
	R8151	QRD161J-223	CARBON RESISTOR	22K 5% 1/6W	
	R8152	QRD161J-101	CARBON RESISTOR	100 5% 1/6W	
	R8153	QRD161J-103	CARBON RESISTOR	10K 5% 1/6W	
	R8201	QRD161J-393	CARBON RESISTOR	39K 5% 1/6W	

BLOCK NO. 01

⚠	REF.	PARTS NO.	PARTS NAME	REMARKS	SUFFIX
	R8202	QRD161J-333	CARBON RESISTOR	33K 5% 1/6W	
	R8257	QRD167J-682	CARBON RESISTOR	6.8K 5% 1/6W	
	R8258	QRD161J-221	CARBON RESISTOR	220 5% 1/6W	
	R8259	QRD161J-104	CARBON RESISTOR	100K 5% 1/6W	
	R8260	QRD161J-684	CARBON RESISTOR	680K 5% 1/6W	
	R8262	QRD161J-102	CARBON RESISTOR	1.0K 5% 1/6W	
	R8263	QRD161J-102	CARBON RESISTOR	1.0K 5% 1/6W	
	R8264	QRD161J-224	CARBON RESISTOR	220K 5% 1/6W	
	R8265	QRD161J-333	CARBON RESISTOR	33K 5% 1/6W	
	R8266	QRD161J-273	CARBON RESISTOR	27K 5% 1/6W	
	R8267	QRD161J-124	CARBON RESISTOR	120K 5% 1/6W	
	R8268	QRD161J-104	CARBON RESISTOR	100K 5% 1/6W	
	R8270	QRD161J-224	CARBON RESISTOR	220K 5% 1/6W	
	R8271	QRD161J-393	CARBON RESISTOR	39K 5% 1/6W	
	R8272	QRD161J-273	CARBON RESISTOR	27K 5% 1/6W	
	R8273	QRD161J-753	CARBON RESISTOR	75K 5% 1/6W	
	R8274	QRD161J-623	CARBON RESISTOR	62K 5% 1/6W	
	R8275	QRD161J-623	CARBON RESISTOR	62K 5% 1/6W	
	R8276	QRD161J-104	CARBON RESISTOR	100K 5% 1/6W	
	R8277	QRD161J-303Y	CARBON RESISTOR	30K 5% 1/6W	
	R8278	QRD161J-303Y	CARBON RESISTOR	30K 5% 1/6W	
	R8279	QRD161J-363	CARBON RESISTOR	36K 5% 1/6W	
	R8280	QRD161J-473	CARBON RESISTOR	47K 5% 1/6W	
	R8281	QRD161J-393	CARBON RESISTOR	39K 5% 1/6W	
	R8282	QRD161J-823	CARBON RESISTOR	82K 5% 1/6W	
	R8283	QRD161J-563	CARBON RESISTOR	56K 5% 1/6W	
	R8284	QRD161J-393	CARBON RESISTOR	39K 5% 1/6W	
	R8285	QRD161J-823	CARBON RESISTOR	82K 5% 1/6W	
	R8286	QRD161J-913	CARBON RESISTOR	91K 5% 1/6W	
	R8288	QRD161J-224	CARBON RESISTOR	220K 5% 1/6W	
	R8289	QRD161J-433	CARBON RESISTOR	43K 5% 1/6W	
	R8290	QRD161J-563	CARBON RESISTOR	56K 5% 1/6W	
	R8291	QRD161J-683	CARBON RESISTOR	68K 5% 1/6W	
	R8292	QRD161J-623	CARBON RESISTOR	62K 5% 1/6W	
	R8293	QRD161J-104	CARBON RESISTOR	100K 5% 1/6W	
	R8294	QRD161J-224	CARBON RESISTOR	220K 5% 1/6W	
	R8295	QRD161J-623	CARBON RESISTOR	62K 5% 1/6W	
	R8296	QRD161J-433	CARBON RESISTOR	43K 5% 1/6W	
	R8297	QRD161J-333	CARBON RESISTOR	33K 5% 1/6W	
	R8298	QRD161J-473	CARBON RESISTOR	47K 5% 1/6W	
	R8299	QRD161J-333	CARBON RESISTOR	33K 5% 1/6W	
	R8351	QRD161J-223	CARBON RESISTOR	22K 5% 1/6W	
	R8352	QRD161J-223	CARBON RESISTOR	22K 5% 1/6W	
	R8353	QRD161J-223	CARBON RESISTOR	22K 5% 1/6W	
	R8354	QRD161J-223	CARBON RESISTOR	22K 5% 1/6W	
	R8355	QRD161J-362	CARBON RESISTOR	3.6K 5% 1/6W	
	R8356	QRD161J-433	CARBON RESISTOR	43K 5% 1/6W	
	R8357	QRD161J-273	CARBON RESISTOR	27K 5% 1/6W	
	R8358	QRD161J-823	CARBON RESISTOR	82K 5% 1/6W	
	R8359	QRD161J-243	CARBON RESISTOR	24K 5% 1/6W	
	R8360	QRD161J-183	CARBON RESISTOR	18K 5% 1/6W	
	R8431	QRD161J-103	CARBON RESISTOR	10K 5% 1/6W	
⚠	R8432	QRD14CJ-100SX	CARBON RESISTOR	10 5% 1/4W	C,J
⚠	R8432	QRZ0077-100X	FUSI.RESISTOR	10 5% 1/4W	G,U,UT
⚠	R8432	QRZ0077-100X	FUSI.RESISTOR	10 5% 1/4W	A,B,E,EN

BLOCK NO. 01

⚠	REF.	PARTS NO.	PARTS NAME	REMARKS	SUFFIX
	R8433	QRD161J-102	CARBON RESISTOR	1.0K 5% 1/6W	
	R8434	QRD161J-102	CARBON RESISTOR	1.0K 5% 1/6W	
	R8435	QRD161J-471	CARBON RESISTOR	470 5% 1/6W	
	R8436	QRD167J-332	CARBON RESISTOR	3.3K 5% 1/6W	
	R8437	QRD161J-473	CARBON RESISTOR	47K 5% 1/6W	
	R8438	QRD161J-103	CARBON RESISTOR	10K 5% 1/6W	
	R8441	QRD14CJ-2R2SX	CARBON RESISTOR	2.2 5% 1/4W	
	R8442	QRD161J-563	CARBON RESISTOR	56K 5% 1/6W	
	R8443	QRD161J-563	CARBON RESISTOR	56K 5% 1/6W	
	R8444	QRD14CJ-2R2SX	CARBON RESISTOR	2.2 5% 1/4W	
	R8445	QRD161J-105	CARBON RESISTOR	1.0M 5% 1/6W	
	R8446	QRD161J-105	CARBON RESISTOR	1.0M 5% 1/6W	
	R8447	QRD161J-105	CARBON RESISTOR	1.0M 5% 1/6W	
	R8448	QRD161J-105	CARBON RESISTOR	1.0M 5% 1/6W	
	R8481	QRD161J-103	CARBON RESISTOR	10K 5% 1/6W	
⚠	R8482	QRD14CJ-100SX	CARBON RESISTOR	10 5% 1/4W	C,J
⚠	R8482	QRZ0077-100X	FUSI.RESISTOR	10 5% 1/4W	G,U,UT
⚠	R8482	QRZ0077-100X	FUSI.RESISTOR	10 5% 1/4W	A,B,E,EN
	R8483	QRD161J-102	CARBON RESISTOR	1.0K 5% 1/6W	
	R8484	QRD161J-102	CARBON RESISTOR	1.0K 5% 1/6W	
	R8485	QRD161J-471	CARBON RESISTOR	470 5% 1/6W	
	R8486	QRD167J-332	CARBON RESISTOR	3.3K 5% 1/6W	
	R8491	QRD14CJ-2R2SX	CARBON RESISTOR	2.2 5% 1/4W	
	R8492	QRD161J-563	CARBON RESISTOR	56K 5% 1/6W	
	R8493	QRD161J-563	CARBON RESISTOR	56K 5% 1/6W	
	R8494	QRD14CJ-2R2SX	CARBON RESISTOR	2.2 5% 1/4W	
	R8503	QRD161J-223	CARBON RESISTOR	22K 5% 1/6W	
	R8504	QRD161J-103	CARBON RESISTOR	10K 5% 1/6W	
	R8505	QRD161J-101	CARBON RESISTOR	100 5% 1/6W	
	R8511	QRD161J-102	CARBON RESISTOR	1.0K 5% 1/6W	
	R8512	QRD161J-223	CARBON RESISTOR	22K 5% 1/6W	
	R8513	QRD167J-332	CARBON RESISTOR	3.3K 5% 1/6W	
	R8521	QRD161J-104	CARBON RESISTOR	100K 5% 1/6W	
	R8522	QRD161J-123	CARBON RESISTOR	12K 5% 1/6W	
	R8523	QRD161J-123	CARBON RESISTOR	12K 5% 1/6W	
	R8524	QRD161J-103	CARBON RESISTOR	10K 5% 1/6W	
	R8525	QRD161J-121	CARBON RESISTOR	120 5% 1/6W	
	R8526	QRD161J-180	CARBON RESISTOR	18 5% 1/6W	
	R8527	QRD161J-223	CARBON RESISTOR	22K 5% 1/6W	
	R8528	QRD161J-223	CARBON RESISTOR	22K 5% 1/6W	
	R8529	QRD161J-472	CARBON RESISTOR	4.7K 5% 1/6W	
	R8530	QRD161J-472	CARBON RESISTOR	4.7K 5% 1/6W	
	R8531	QRD161J-223	CARBON RESISTOR	22K 5% 1/6W	
	R8701	QRD161J-101	CARBON RESISTOR	100 5% 1/6W	
	R8702	QRD161J-103	CARBON RESISTOR	10K 5% 1/6W	
	R8703	QRD161J-103	CARBON RESISTOR	10K 5% 1/6W	
	R8704	QRD161J-102	CARBON RESISTOR	1.0K 5% 1/6W	
	R8705	QRD161J-183	CARBON RESISTOR	18K 5% 1/6W	
	R8706	QRD161J-101	CARBON RESISTOR	100 5% 1/6W	
	R8707	QRD161J-223	CARBON RESISTOR	22K 5% 1/6W	
	R8708	QRD161J-102	CARBON RESISTOR	1.0K 5% 1/6W	
	R8709	QRD161J-151	CARBON RESISTOR	150 5% 1/6W	
	R8710	QRD161J-151	CARBON RESISTOR	150 5% 1/6W	
	R8801	QRD161J-683	CARBON RESISTOR	68K 5% 1/6W	
	R8802	QRD161J-683	CARBON RESISTOR	68K 5% 1/6W	

BLOCK NO. 01

⚠	REF.	PARTS NO.	PARTS NAME	REMARKS	SUFFIX
	R8803	QRD161J-222	CARBON RESISTOR	2.2K 5% 1/6W	
	R8804	QRD161J-104	CARBON RESISTOR	100K 5% 1/6W	
	R8805	QRD161J-103	CARBON RESISTOR	10K 5% 1/6W	
	R8806	QRD161J-223	CARBON RESISTOR	22K 5% 1/6W	
	R8807	QRD161J-223	CARBON RESISTOR	22K 5% 1/6W	
	R8808	QRD161J-223	CARBON RESISTOR	22K 5% 1/6W	
	R8809	QRD161J-224	CARBON RESISTOR	220K 5% 1/6W	
	R8810	QRD161J-103	CARBON RESISTOR	10K 5% 1/6W	
	R8811	QRD161J-223	CARBON RESISTOR	22K 5% 1/6W	
	R8901	QRD161J-103	CARBON RESISTOR	10K 5% 1/6W	
	R8902	QRD161J-103	CARBON RESISTOR	10K 5% 1/6W	
	R8903	QRD161J-104	CARBON RESISTOR	100K 5% 1/6W	
	R8904	QRD161J-104	CARBON RESISTOR	100K 5% 1/6W	
	R8905	QRD161J-104	CARBON RESISTOR	100K 5% 1/6W	
	R8906	QRD161J-104	CARBON RESISTOR	100K 5% 1/6W	
	R8907	QRD161J-104	CARBON RESISTOR	100K 5% 1/6W	
	R8908	QRD161J-104	CARBON RESISTOR	100K 5% 1/6W	
	R8909	QRD161J-103	CARBON RESISTOR	10K 5% 1/6W	
	R8910	QRD161J-561	CARBON RESISTOR	560 5% 1/6W	
	R8911	QRD14CJ-4R7SX	UNF.C.RESISTOR	4.7 5% 1/4W	C,J
	R8911	QRZ0077-4R7X	FUSE RESISTOR	4.7 1/4W	G,U,UT
	R8911	QRZ0077-4R7X	FUSE RESISTOR	4.7 1/0W	A,B,E,EN
	TUB	QXTG109-010	GLASS TUBE	FOR Q912	G,U,UT
	TUB	QXTG109-010	GLASS TUBE	FOR Q912	A,B,E,EN
	VA881	MA27T-B	DIODE		
	VR111	QVPA601-104A	V.RESISTOR	PB LEVEL ADJ.	
	VR116	QVPA601-104A	V.RESISTOR	PB LEVEL ADJ. B	
	VR211	QVPA601-104A	V.RESISTOR	PB LEVEL ADJ.	
	VR216	QVPA601-104A	V.RESISTOR	PB LEVEL ADJ. B	
	Z 702	VMA4633-001	SHIELD		
⚠	Z 901	VMZ0087-001Z	FUSE CLIP	FOR F901,F902	A,B,E,EN
⚠	Z 901	VMZ0087-001Z	FUSE HOLDER	FOR F901,F902	G,U,UT
⚠	Z 902	VMZ0087-001Z	FUSE HOLDER	FOR F901,F902	G,U,UT
⚠	Z 902	VMZ0087-001Z	FUSE CLIP	FOR F901,F902	A,B,E,EN
⚠	Z 903	VMZ0087-001Z	FUSE CLIP	FOR F901,F902	A,B,E,EN
⚠	Z 903	VMZ0087-001Z	FUSE HOLDER	FOR F901,F902	G,U,UT
⚠	Z 904	VMZ0087-001Z	FUSE HOLDER	FOR F901,F902	G,U,UT
⚠	Z 904	VMZ0087-001Z	FUSE CLIP	FOR F901,F902	A,B,E,EN

■ Power Supply Board (U/UT only)

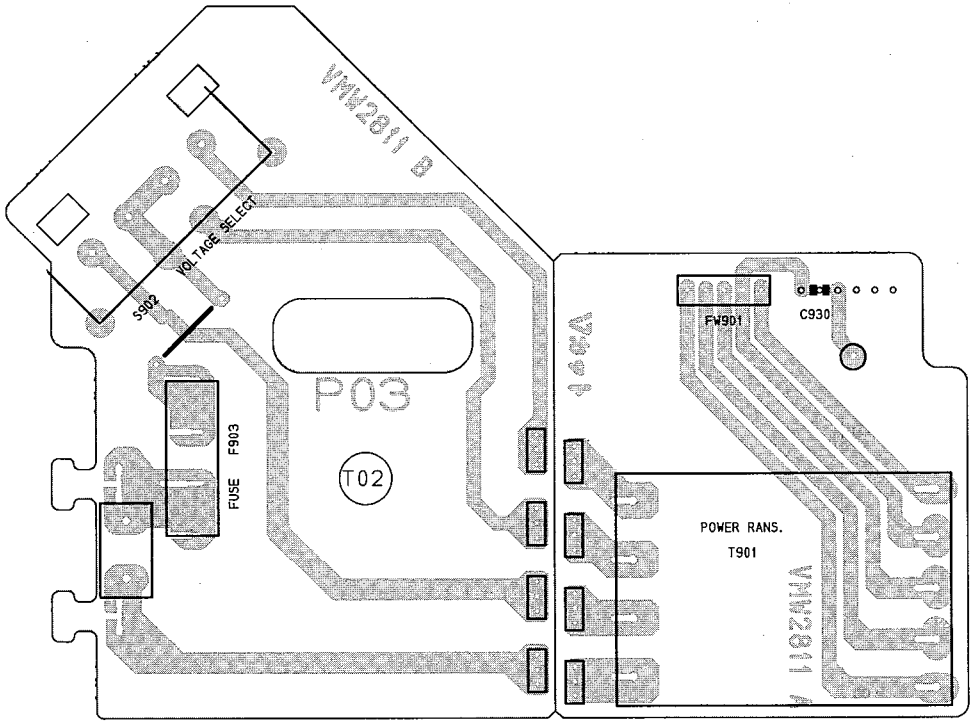

Fig. 7 – 2

● Power Supply Board Parts List

BLOCK NO. 03

⚠	REF.	PARTS NO.	PARTS NAME	REMARKS	SUFFIX
	C 930	QCF11HP-103	C.CAPACITOR	.010MF +100:-0%	U,UT
⚠	CN905	VMC0221-003	CONNECTOR		U,UT
⚠	CN906	VMC0221-003	CONNECTOR		U,UT
⚠	CN907	VMC0221-003	CONNECTOR		U,UT
⚠	CN908	VMC0221-003	CONNECTOR		U,UT
⚠	S 902	QSS2325-112	SLIDE SWITCH		U,UT
⚠	TAB	VMZ0034-002	TAB	FOR POWER CORD	U,UT
⚠	TAB	VMZ0034-002	TAB	FOR POWER CORD	U,UT
⚠	Z 905	VMZ0043-001S	FUSE CLAMP	FOR F903	U,UT
⚠	Z 905	VMZ0043-001S	FUSE CLAMP	FOR F903	U,UT
⚠	Z 906	VMZ0043-001S	FUSE CLAMP	FOR F903	U,UT
⚠	Z 906	VMZ0043-001S	FUSE CLAMP	FOR F903	U,UT

■ Mecha Board

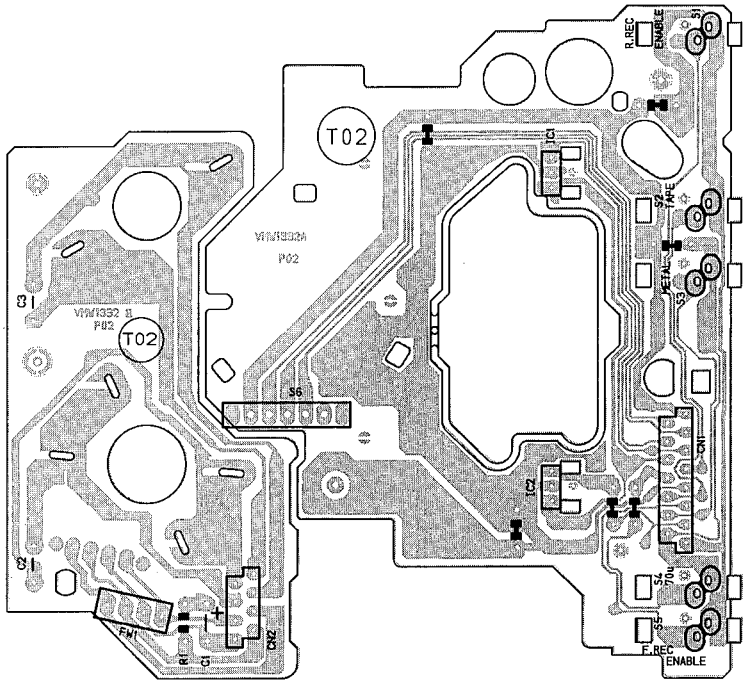

Fig. 7 – 3

● Mecha Board Parts List

BLOCK NO. 04

⚠	REF.	PARTS NO.	PARTS NAME	REMARKS	SUFFIX
	C 2	QFV41HJ-104ZM	TF CAPACITOR	.10MF 5% 50V	
	C 3	QFV41HJ-104ZM	TF CAPACITOR	.10MF 5% 50V	
	CAMSW	VKS3616-00A	CAM SW UNIT	S6	
	CN 1	VMC0234-R15	CONNECTOR	CN1	
	CN 2	VMC0234-R08	CONNECTOR	CN2	
	HOLDE	VKS3630-001MM	IC HOLDER	FOR IC 2	
	HOLDE	VKS3630-001MM	IC HOLDER	FOR IC 1	
	IC 1	DN6851-HI	HALL IC		
	IC 2	DN6851-HI	HALL IC		
	S 1	MXS00220MVL0	CASSETTE SWITCH		
	S 2	MXS00220MVL0	CASSETTE SWITCH		
	S 3	MXS00220MVL0	CASSETTE SWITCH		
	S 4	MXS00220MVL0	CASSETTE SWITCH		
	S 5	MXS00220MVL0	CASSETTE SWITCH		

■ Sub Board

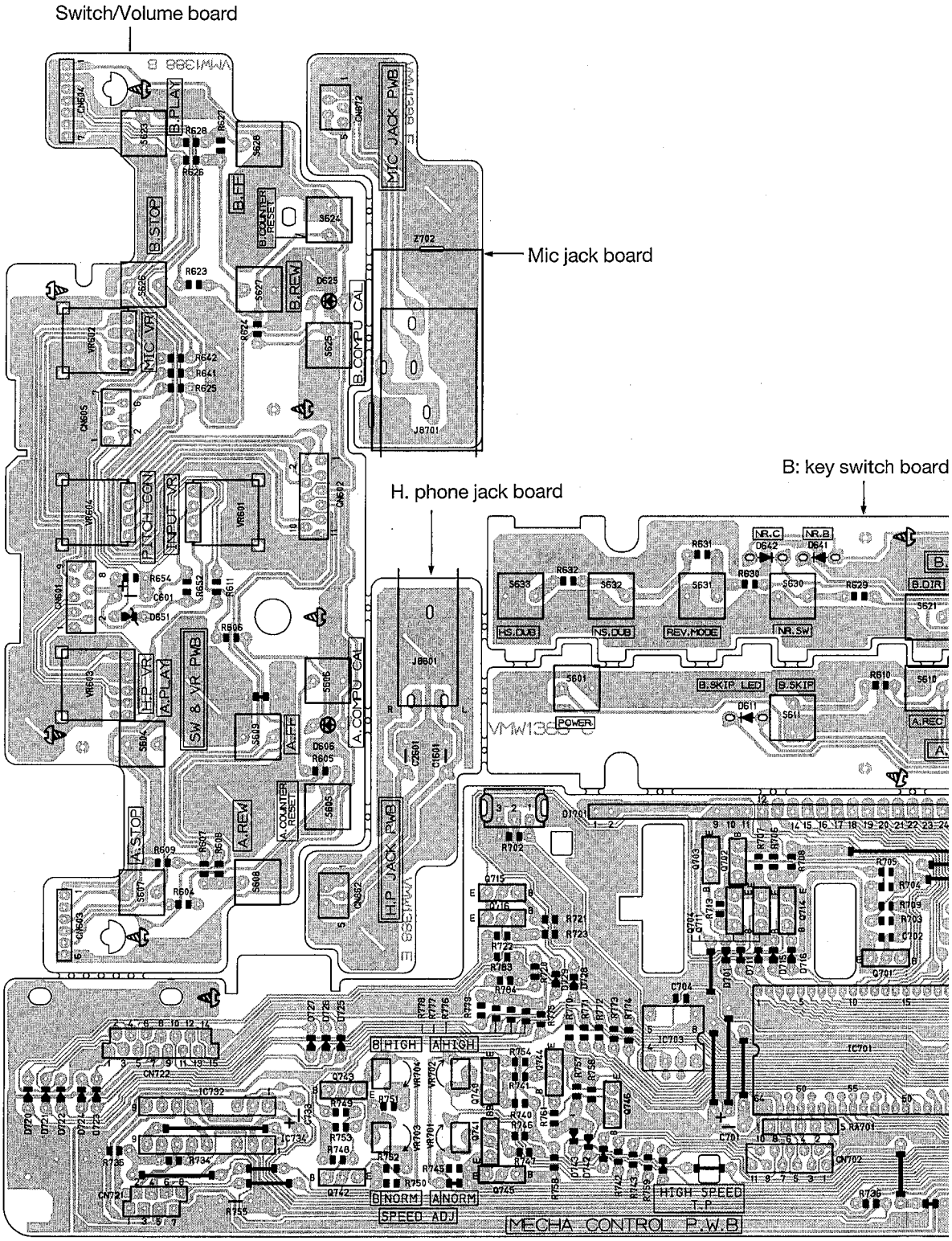
Switch/Volume board
Mic jack board
H. phone jack board
B: key switch board
MECHA CONTROL P.W.B

	6	7	8	9	10

h board

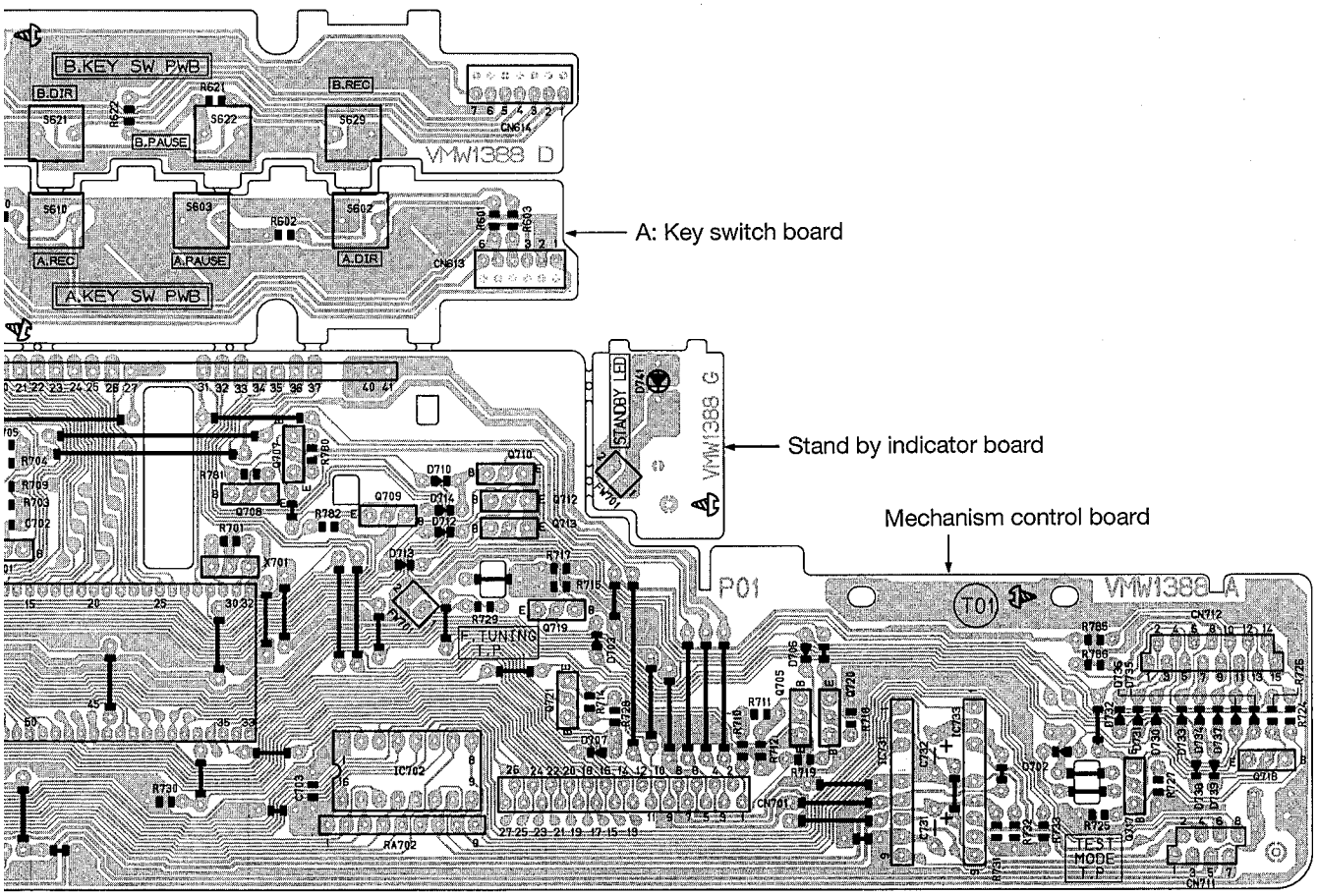

Fig. 7 – 4

● Sub Board Parts List

BLOCK NO. 02

⚠	REF.	PARTS NO.	PARTS NAME	REMARKS	SUFFIX
	C 601	QETC1HM-104ZN	E.CAPACITOR	.10MF 20% 50V	
	C 701	QET41AM-477	E.CAPACITOR	470MF 20% 10V	
	C 702	QCBB1HK-471Y	C.CAPACITOR	470PF 10% 50V	
	C 703	QCVB1CM-103Y	C.CAPACITOR	.010MF 20% 16V	
	C 704	QCVB1CM-103Y	C.CAPACITOR	.010MF 20% 16V	
	C 732	QEK41EM-106	E.CAPACITOR	10MF 20% 25V	
	C 733	QET41EM-106	E.CAPACITOR	10MF 20% 25V	
	CN601	VMC0163-R09	CONNECTOR		
	CN602	VMC0163-R11	CONNECTOR		
	CN603	VMC0280-006	CONNECTOR		
	CN604	VMC0280-007	CONNECTOR		
	CN605	VMC0163-R07	CONNECTOR		
	CN613	VMC0281-S06	CONNECTOR		
	CN614	VMC0281-S07	CONNECTOR		
	CN701	VMC0163-R27	CONNECTOR		
	CN702	VMC0163-R11	CONNECTOR		
	CN711	VMC0234-P08	CONNECTOR		
	CN712	VMC0234-P15	CONNECTOR		
	CN721	VMC0234-P08	CONNECTOR		
	CN722	VMC0234-P15	CONNECTOR		
	D 606	SLZ-981C09-T6	LED		
	D 611	SLR-325MCT31	LED		
	D 625	SLZ-981C09-T6	LED		
	D 641	SLR-325MCT31	LED		
	D 642	SLR-325DCT31	LED		
	D 651	MTZ3.6JB	ZENER DIODE		
	D 701	1SS133	SI DIODE		
	D 702	1SS133	SI DIODE		
	D 703	1SS133	SI DIODE		
	D 706	1SS133	SI DIODE		
	D 707	1SS133	SI DIODE		
	D 710	1SS133	SI DIODE		
	D 711	1SS133	SI DIODE		
	D 712	1SS133	SI DIODE		
	D 713	1SS133	SI DIODE		
	D 714	1SS133	SI DIODE		
	D 715	1SS133	SI DIODE		
	D 716	1SS133	SI DIODE		
	D 720	1SS133	SI DIODE		
	D 721	1SS133	SI DIODE		
	D 722	1SS133	SI DIODE		
	D 723	1SS133	SI DIODE		
	D 724	1SS133	SI DIODE		
	D 725	1SS133	SI DIODE		
	D 726	1SS133	SI DIODE		
	D 727	1SS133	SI DIODE		
	D 728	1SS133	SI DIODE		
	D 729	1SS133	SI DIODE		
	D 730	1SS133	SI DIODE		
	D 731	1SS133	SI DIODE		
	D 732	1SS133	SI DIODE		
	D 733	1SS133	SI DIODE		
	D 734	1SS133	SI DIODE		
	D 735	1SS133	SI DIODE		
	D 736	1SS133	SI DIODE		
	D 737	1SS133	SI DIODE		
	D 738	1SS133	SI DIODE		
	D 739	1SS133	SI DIODE		
	D 741	SLR-55VCF08	LED		
	D 742	1SS133	SI DIODE		

BLOCK NO. 02

⚠	REF.	PARTS NO.	PARTS NAME	REMARKS	SUFFIX
	D 743	1SS133	SI DIODE		
	DI701	BJ361G	FL TUBE		
	IC701	MB89146V2P-122	IC	SYSTEM CPU	
	IC702	M50253P	IC	PORT EXPANDER	
	IC703	BR93LC46	IC		
	IC731	BA6218	IC	A CAM MOTER DRI	
	IC732	BA6218	IC	B CAM MOTOR DRI	
	IC733	TA8409S	IC	A REEL MOTOR DR	
	IC734	TA8409S	IC	B REEL MOTOR DR	
	Q 701	2SC1740S(R/S)	TRANSISTOR		
	Q 702	2SC1740S(R/S)	TRANSISTOR		
	Q 703	DTA124ES	TRANSISTOR		
	Q 704	DTC124ES	TRANSISTOR		
	Q 705	2SC1740S(R/S)	TRANSISTOR		
	Q 707	2SC1740S(R/S)	TRANSISTOR		
	Q 708	2SC1740S(R/S)	TRANSISTOR		
	Q 709	2SC1740S(R/S)	TRANSISTOR		
	Q 710	DTC124ES	TRANSISTOR		
	Q 711	DTC124ES	TRANSISTOR		
	Q 712	DTC124ES	TRANSISTOR		
	Q 713	DTC124ES	TRANSISTOR		
	Q 714	DTC124ES	TRANSISTOR		
	Q 715	2SC1740S(R/S)	TRANSISTOR		
	Q 716	2SC1740S(R/S)	TRANSISTOR		
	Q 717	2SC1740S(R/S)	TRANSISTOR		
	Q 718	2SC1740S(R/S)	TRANSISTOR		
	Q 719	2SC1740S(R/S)	TRANSISTOR		
	Q 720	2SC1740S(R/S)	TRANSISTOR		
	Q 721	DTC114ESTP	TRANSISTOR		
	Q 740	2SA1175	TRANSISTOR		
	Q 741	2SA1175	TRANSISTOR		
	Q 742	2SA1175	TRANSISTOR		
	Q 743	2SA1175	TRANSISTOR		
	Q 744	DTC143ES	TRANSISTOR		
	Q 745	2SA1175	TRANSISTOR		
	Q 746	DTC124ES	TRANSISTOR		
	R 601	QRD161J-102	CARBON RESISTOR	1.0K 5% 1/6W	
	R 602	QRD161J-122	CARBON RESISTOR	1.2K 5% 1/6W	
	R 603	QRD161J-182	CARBON RESISTOR	1.8K 5% 1/6W	
	R 604	QRD161J-272	CARBON RESISTOR	2.7K 5% 1/6W	
	R 605	QRD161J-472	CARBON RESISTOR	4.7K 5% 1/6W	
	R 606	QRD161J-271	CARBON RESISTOR	270 5% 1/6W	
	R 607	QRD161J-102	CARBON RESISTOR	1.0K 5% 1/6W	
	R 608	QRD161J-122	CARBON RESISTOR	1.2K 5% 1/6W	
	R 609	QRD161J-182	CARBON RESISTOR	1.8K 5% 1/6W	
	R 610	QRD161J-272	CARBON RESISTOR	2.7K 5% 1/6W	
	R 611	QRD161J-271	CARBON RESISTOR	270 5% 1/6W	
	R 621	QRD161J-222	CARBON RESISTOR	2.2K 5% 1/6W	
	R 622	QRD161J-182	CARBON RESISTOR	1.8K 5% 1/6W	
	R 623	QRD161J-272	CARBON RESISTOR	2.7K 5% 1/6W	
	R 624	QRD161J-472	CARBON RESISTOR	4.7K 5% 1/6W	
	R 625	QRD161J-271	CARBON RESISTOR	270 5% 1/6W	
	R 626	QRD161J-102	CARBON RESISTOR	1.0K 5% 1/6W	
	R 627	QRD161J-122	CARBON RESISTOR	1.2K 5% 1/6W	
	R 628	QRD161J-182	CARBON RESISTOR	1.8K 5% 1/6W	
	R 629	QRD161J-272	CARBON RESISTOR	2.7K 5% 1/6W	
	R 630	QRD161J-472	CARBON RESISTOR	4.7K 5% 1/6W	
	R 631	QRD161J-822	CARBON RESISTOR	8.2K 5% 1/6W	
	R 632	QRD161J-273	CARBON RESISTOR	27K 5% 1/6W	
	R 641	QRD161J-271	CARBON RESISTOR	270 5% 1/6W	

BLOCK NO. 02

⚠	REF.	PARTS NO.	PARTS NAME	REMARKS	SUFFIX
	R 642	QRD161J-271	CARBON RESISTOR	270 5% 1/6W	
	R 652	QRD161J-331	CARBON RESISTOE	330 5% 1/6W	
	R 654	QRD161J-105	CARBON RESISTOR	1.0M 5% 1/6W	
	R 701	QRD161J-153	CARBON RESISTOR	15K 5% 1/6W	
	R 702	QRD161J-103	CARBON RESISTOR	10K 5% 1/6W	
	R 703	QRD161J-471	CARBON RESISTOR	470 5% 1/6W	
	R 704	QRD161J-102	CARBON RESISTOR	1.0K 5% 1/6W	
	R 705	QRD161J-102	CARBON RESISTOR	1.0K 5% 1/6W	
	R 706	QRD161J-102	CARBON RESISTOR	1.0K 5% 1/6W	
	R 707	QRD161J-471	CARBON RESISTOR	470 5% 1/6W	
	R 708	QRD161J-272	CARBON RESISTOR	2.7K 5% 1/6W	
	R 709	QRD161J-103	CARBON RESISTOR	10K 5% 1/6W	
	R 710	QRD161J-221	CARBON RESISTOR	220 5% 1/6W	
	R 711	QRD161J-473	CARBON RESISTOR	47K 5% 1/6W	
	R 712	QRD161J-223	CARBON RESISTOR	22K 5% 1/6W	
	R 713	QRD161J-102	CARBON RESISTOR	1.0K 5% 1/6W	
	R 714	QRD161J-223	CARBON RESISTOR	22K 5% 1/6W	
	R 715	QRD161J-103	CARBON RESISTOR	10K 5% 1/6W	
	R 717	QRD161J-223	CARBON RESISTOR	22K 5% 1/6W	
	R 718	QRD161J-104	CARBON RESISTOR	100K 5% 1/6W	
	R 719	QRD161J-223	CARBON RESISTOR	22K 5% 1/6W	
	R 720	QRD161J-223	CARBON RESISTOR	22K 5% 1/6W	
	R 721	QRD161J-223	CARBON RESISTOR	22K 5% 1/6W	
	R 722	QRD161J-223	CARBON RESISTOR	22K 5% 1/6W	
	R 723	QRD161J-223	CARBON RESISTOR	22K 5% 1/6W	
	R 724	QRD161J-223	CARBON RESISTOR	22K 5% 1/6W	
	R 725	QRD161J-223	CARBON RESISTOR	22K 5% 1/6W	
	R 726	QRD161J-223	CARBON RESISTOR	22K 5% 1/6W	
	R 727	QRD161J-223	CARBON RESISTOR	22K 5% 1/6W	
	R 728	QRD161J-103	CARBON RESISTOR	10K 5% 1/6W	
	R 729	QRD161J-151	CARBON RESISTOR	150 5% 1/6W	
	R 730	QRD161J-103	CARBON RESISTOR	10K 5% 1/6W	
	R 731	QRD167J-332	CARBON RESISTOR	3.3K 5% 1/6W	
	R 732	QRD161J-103	CARBON RESISTOR	10K 5% 1/6W	
	R 733	QRD161J-182	CARBON RESISTOR	1.8K 5% 1/6W	
	R 734	QRD167J-332	CARBON RESISTOR	3.3K 5% 1/6W	
	R 735	QRD161J-103	CARBON RESISTOR	10K 5% 1/6W	
	R 736	QRD161J-182	CARBON RESISTOR	1.8K 5% 1/6W	
	R 740	QRD161J-224	CARBON RESISTOR	220K 5% 1/6W	
	R 741	QRD161J-184	CARBON RESISTOR	180K 5% 1/6W	
	R 742	QRD161J-123	CARBON RESISTOR	12K 5% 1/6W	
	R 743	QRD161J-752	CARBON RESISTOR	7.5K 5% 1/6W	
	R 745	QRD161J-683	CARBON RESISTOR	68K 5% 1/6W	
	R 746	QRD161J-224	CARBON RESISTOR	220K 5% 1/6W	
	R 747	QRD161J-184	CARBON RESISTOR	180K 5% 1/6W	
	R 748	QRD161J-224	CARBON RESISTOR	220K 5% 1/6W	
	R 749	QRD161J-184	CARBON RESISTOR	180K 5% 1/6W	
	R 750	QRD161J-683	CARBON RESISTOR	68K 5% 1/6W	
	R 751	QRD161J-153	CARBON RESISTOR	15K 5% 1/6W	
	R 752	QRD161J-103	CARBON RESISTOR	10K 5% 1/6W	
	R 753	QRD161J-224	CARBON RESISTOR	220K 5% 1/6W	
	R 754	QRD161J-184	CARBON RESISTOR	180K 5% 1/6W	
⚠	R 755	QRD14CJ-4R7SX	UNF.C.RESISTOR	4.7 5% 1/4W	C,J
⚠	R 755	QRH144J-4R7	FUSI.RESISTOR	4.7 5% 1/6W	G,U,UT
⚠	R 755	QRH144J-4R7	FUSI.RESISTOR	4.7 5% 1/4W	A,B,E,EN
	R 756	QRD161J-103	CARBON RESISTOR	10K 5% 1/6W	
	R 757	QRD161J-103	CARBON RESISTOR	10K 5% 1/6W	
	R 758	QRD161J-224	CARBON RESISTOR	220K 5% 1/6W	
	R 759	QRD161J-184	CARBON RESISTOR	180K 5% 1/6W	
	R 761	QRD161J-103	CARBON RESISTOR	10K 5% 1/6W	

BLOCK NO. 02

⚠	REF.	PARTS NO.	PARTS NAME	REMARKS	SUFFIX
	R 770	QRD161J-101	CARBON RESISTOR	100 5% 1/6W	
	R 771	QRD161J-101	CARBON RESISTOR	100 5% 1/6W	
	R 772	QRD161J-101	CARBON RESISTOR	100 5% 1/6W	
	R 773	QRD161J-101	CARBON RESISTOR	100 5% 1/6W	
	R 774	QRD161J-101	CARBON RESISTOR	100 5% 1/6W	
	R 775	QRD161J-103	CARBON RESISTOR	10K 5% 1/6W	
	R 776	QRD161J-103	CARBON RESISTOR	10K 5% 1/6W	
	R 777	QRD161J-103	CARBON RESISTOR	10K 5% 1/6W	
	R 778	QRD161J-103	CARBON RESISTOR	10K 5% 1/6W	
	R 779	QRD161J-103	CARBON RESISTOR	10K 5% 1/6W	
	R 780	QRD161J-223	CARBON RESISTOR	22K 5% 1/6W	
	R 781	QRD161J-223	CARBON RESISTOR	22K 5% 1/6W	
	R 782	QRD161J-223	CARBON RESISTOR	22K 5% 1/6W	
	R 783	QRD161J-103	CARBON RESISTOR	10K 5% 1/6W	
	R 784	QRD161J-103	CARBON RESISTOR	10K 5% 1/6W	
	R 785	QRD161J-103	CARBON RESISTOR	10K 5% 1/6W	
	R 786	QRD161J-103	CARBON RESISTOR	10K 5% 1/6W	
	RA701	QRB045J-682	R.NETWORK	6.8K 5% 1/4W	
	RA702	QRB085J-103	R.NETWORK	10K 5% 1/8W	
	S 601	QSQ4H11-V01Z	TACT SWITCH	POWER	
	S 602	QSQ4H11-V01Z	TACT SWITCH	A DIRECTION	
	S 603	QSQ4H11-V01Z	TACT SWITCH	A PAUSE	
	S 604	QSQ4H11-V01Z	TACT SWITCH	A PLAY	
	S 605	QSQ4H11-V01Z	TACT SWITCH	A COUNTER RESET	
	S 606	QSQ4H11-V01Z	TACT SWITCH	A CONPU.CALIBRA	
	S 607	QSQ4H11-V01Z	TACT SWITCH	A STOP	
	S 608	QSQ4H11-V01Z	TACT SWITCH	A REW	
	S 609	QSQ4H11-V01Z	TACT SWITCH	A FF	
	S 610	QSQ4H11-V01Z	TACT SWITCH	A REC	
	S 611	QSQ4H11-V01Z	TACT SWITCH	BLANK SKIP	
	S 621	QSQ4H11-V01Z	TACT SWITCH	B DIRECTION	
	S 622	QSQ4H11-V01Z	TACT SWITCH	B PAUSE	
	S 623	QSQ4H11-V01Z	TACT SWITCH	B PLAY	
	S 624	QSQ4H11-V01Z	TACT SWITCH	B COUNTER RESET	
	S 625	QSQ4H11-V01Z	TACT SWITCH	B CONPU. CALIBR	
	S 626	QSQ4H11-V01Z	TACT SWITCH	B STOP	
	S 627	QSQ4H11-V01Z	TACT SWITCH	B REW	
	S 628	QSQ4H11-V01Z	TACT SWITCH	B FF	
	S 629	QSQ4H11-V01Z	TACT SWITCH	B REC	
	S 630	QSQ4H11-V01Z	TACT SWITCH	DOLBY NR	
	S 631	QSQ4H11-V01Z	TACT SWITCH	REV,MODE	
	S 632	QSQ4H11-V01Z	TACT SWITCH	N.SPEED DUBBING	
	S 633	QSQ4H11-V01Z	TACT SWITCH	H.SPEED DUBBING	
	VR601	QVGA12Z-V05	V RESISTOR		
	VR602	QVGA16A-V02	V.RESISTOR		
	VR603	QVCB16A-V02M	V.RESISTOR		
	VR604	QVGA16B-V01	V.RESISTOR		
	VR701	QVPE612-103ZM	SEMI.V.RESISTOR		
	VR702	QVPE612-203ZM	SEMI.V.RESISTOR		
	VR703	QVPE612-103ZM	SEMI.V.RESISTOR		
	VR704	QVPE612-203ZM	SEMI.V.RESISTOR		
	X 701	EFO-EC8004T4	CERAMIC RESONAT		
	Z 701	VYH3844-003	FL HOLDER		

8 Exploded View of Enclosure Component Parts

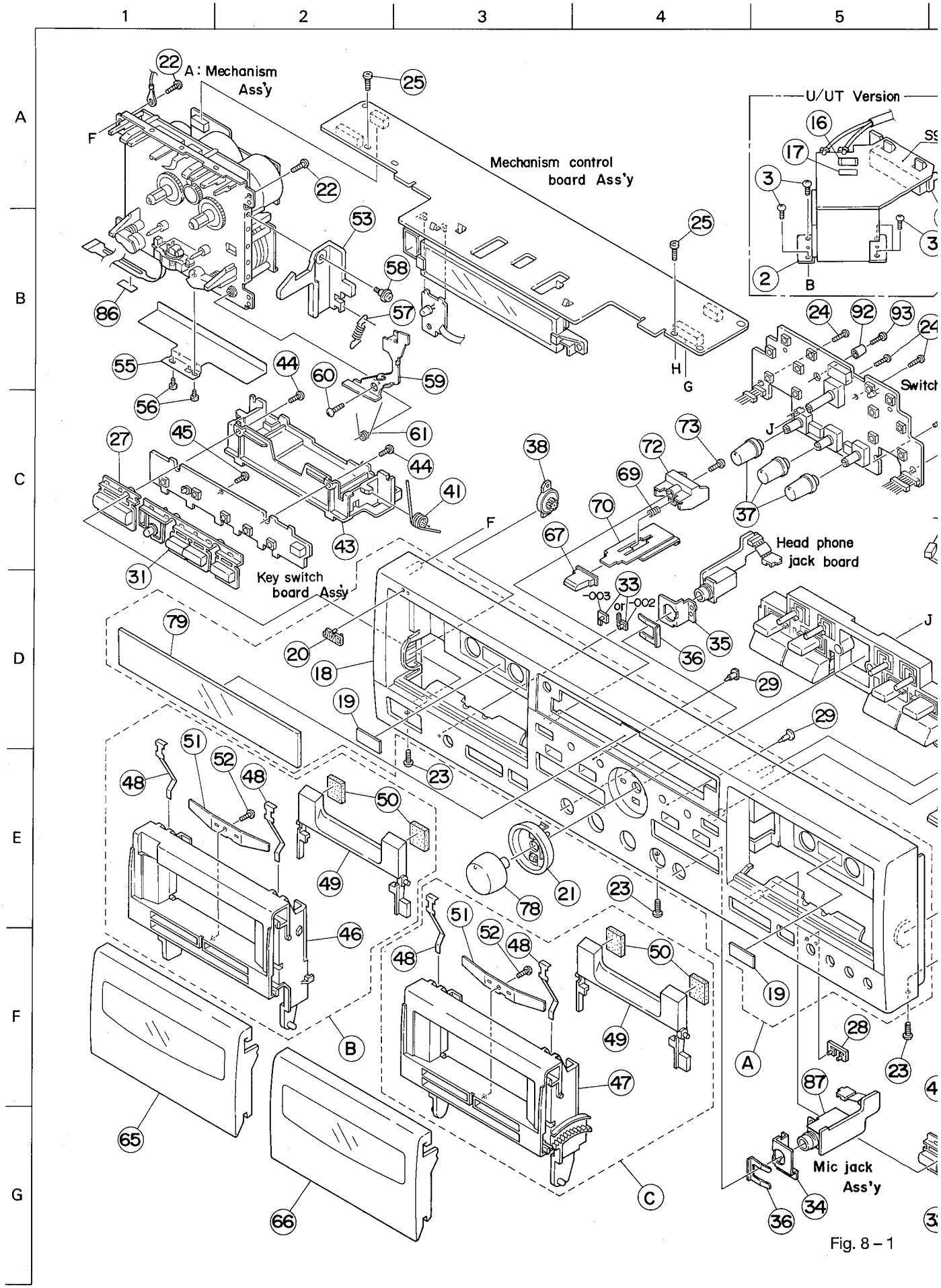

Fig. 8 – 1

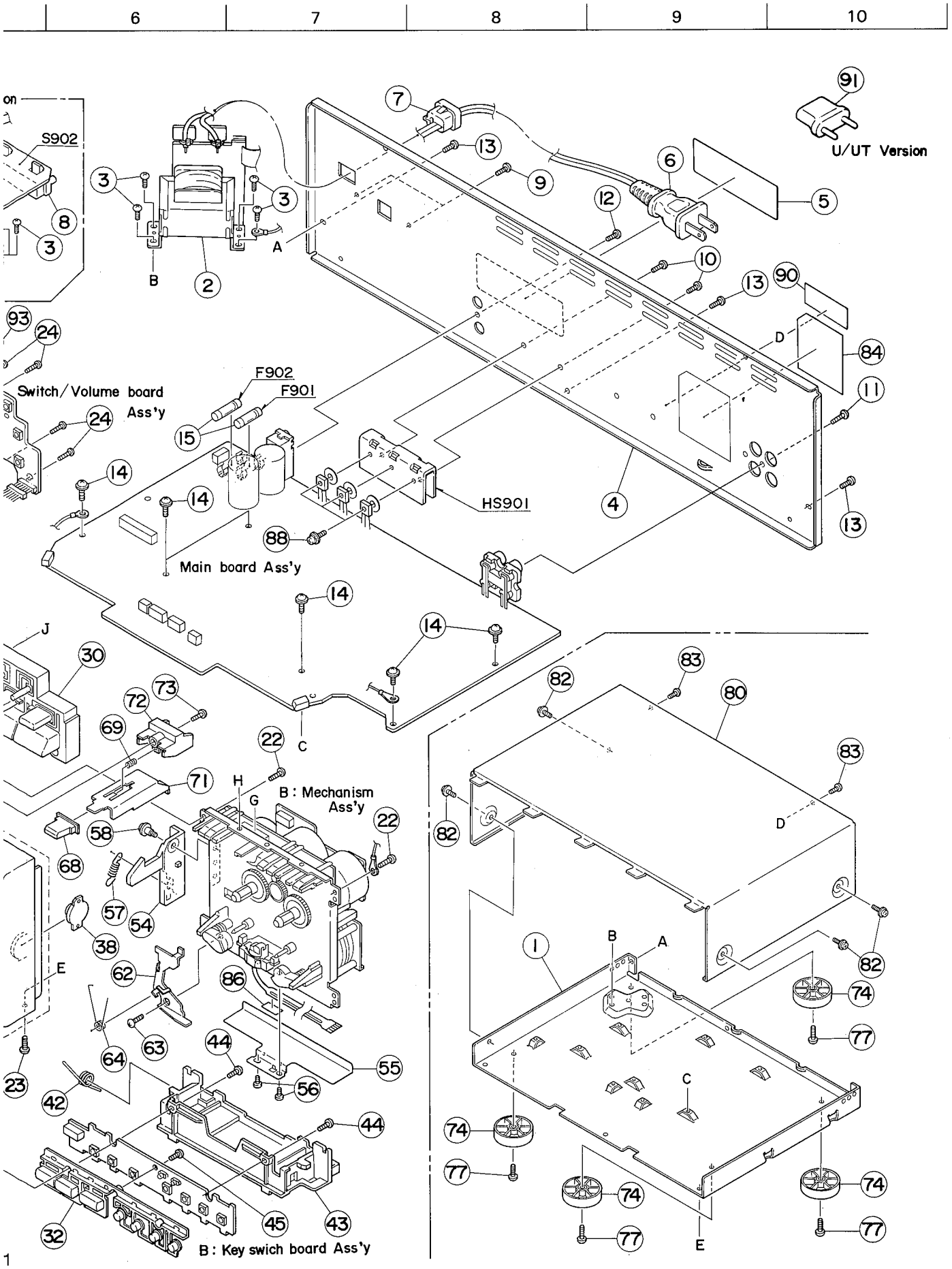
6
7
8
9
10
S902
U/UT Version
Switch/Volume board Ass'y
F902
F901
HS901
Main board Ass'y
B : Mechanism Ass'y
B : Key swich board Ass'y

● Enclosure Component Parts List

BLOCK NO. M1MM

⚠	REF.	PARTS NO.	PARTS NAME	REMARKS	QTY	SUFFIX	CLR
	A	ZCTDW717J-FTN	FRONT PANEL	NO.18-20,79	1		TN
		ZCTDW718K-FB	FRONT PANEL ASS	NO.18-20,79	1		BK
	B	ZCTDW317K-CH-A	CASSETTE HOLDER	NO.46,48-52	1		
	C	ZCTDW317K-CH-B	CASSETTE HOLDER	NO.47-52 DECK B	1		
	1	VKL1333-009	CHASSIS BASE		1		
⚠	2	VTP52Z5-021FBS	POWER TRANS		1	A,B,E,EN,G	
⚠		VTP52A5-021F	POWER TRANS		1	C,J	
⚠		VTP52G5-021F	POWER TRANS		1	U,UT	
	3	SBST3006Z	SCREW	FOR POWER TRANS	4		
	4	VJC2410-038	REAR PANEL	A/B/E/EN/G	1	A,B,E,EN,G	BK
		VJC2410-036	REAR PANEL		1	C,J	TN
		VJC2410-039	REAR PANEL		1	U,UT	BK
	5	VND4999-001	FCC LABEL (3)		1	J	
⚠	6	QMP2560-244	POWER CORD		1	A	
⚠		QMP5530-008BS	POWER CORD		1	B	
⚠		QMP1340-200	POWER CORD		1	C,J	
⚠		QMP7380-200	POWER CORD		1	U,UT	
⚠		QMP3900-200	POWER CORD		1	E,EN,G	
	7	QHS3771-108	CORD STOPPER		1		
	8	VKS5011-001	VOLTAGE CONTACT		1	U,UT	
	9	SBSF3008M	SCREW	FOR V.SELECTOR	2	U,UT	
	10	SBSF3008M	SCREW	FOR HEAT SINK	2		
	11	SBSF3008M	SCREW	FOR PIN JACK	1		
	12	SBSF3008M	SCREW	FOR DCS JACK	1		
	13	SBST3006M	SCREW	FOR REAR+CHASSI	3		
	14	GBST3006Z	SCREW	FOR MAIN P.C.BO	6		
⚠	15	QMF51E2-R80SBS	FUSE	FOR F901,F902	2	G,U,UT	
⚠		QMF51E2-R80SBS	FUSE	FOR F901,F902	2	B	
⚠		QMF51E2-R80SBS	FUSE	FOR F901,F902	2	A,E,EN	
⚠	16	QMF51A2-R315	FUSE	FOR F903	1	U,UT	
	17	VND4003-074	FUSE LABEL	FOR F903	1	U,UT	
	18	VJG1320-020UL	FRONT PANEL		1	C,J	TN
		VJG1320-021	FRONT PANEL		1	A,B,E,EN	BK
		VJG1320-021	FRONT PANEL		1	G,U,UT	BK
	19	VJD4024-002	REFLECTION PLAT		2		
	20	VJD5429-001SS	JVC MARK		1		
	21	VYH7943-001	RING		1		TN
		VYH7943-002	RING		1		BK
	22	SBSF3010Z	SCREW	FOR MECHANISM	4		
	23	SBST3006M	SCREW	FOR F.P.+CHASSI	3		
	24	SBSF2610Z	SCREW	FOR FRONT PWB	5		
	25	SDST2604Z	SCREW	FOR FL.PWB+MECH	2		
	27	VXP5288-002	PUSH BUTTON	FOR POWER	1		BK
		VXP5288-001	PUSH BUTTON	FOR POWER	1		TN
	28	VJK4436-001	LENS		1		
	29	VJK4437-001	LENS		2		
	30	VXP2098-007	MECHA BUTTON	AB PLAY/STOP	1		TN
		VXP2098-008	MECHA BUTTON	AB PLAY/STOP	1		BK
	31	VXP3688-002	MECHA BUTTON	A REC/PAUSE	1		BK
		VXP3688-001	MECHA BUTTON	A REC/PAUSE	1		TN
	32	VXP3689-002	MECHA BUTTON	B REC/PAUSE/DOL	1		BK
		VXP3689-001	MECHA BUTTON	B REC/PAUSE/DOL	1		TN
	33	VJK4436-003	LENS	-002 OR -003	1		
		VJK4436-002	LENS	-002 OR -003	1		
	34	VKL7265-004	JACK BRACKET	FOR MIC JACK	1		
	35	VKL7264-003	JACK BRACKET	FPR P.H. JACK	1		
	36	VKL6752-001	SNAP PLATE		2		
	37	VXL4424-002	KNOB	PHONE/PITCH/MIX	3		BK
		VXL4424-001	KNOB	PHONE/PITCH/MIX	3		TN
	38	VYH7779-00B	DUMPER ASS'Y		2		
	41	VKW3006-236	TORSION SPRING	FOR A-HOLDER	1		
	42	VKW3006-237	TORSION SPRING	FOR B-HOLDER	1		
	43	VYH2300-002	MECHA HOLDER	FOR A B MECHA	2		
	44	SBSF2610Z	SCREW	FOR MECHANISM B	4		
	45	SBSF2610Z	SCREW	FOR A B PWB	2		

BLOCK NO. M1MM

⚠	REF.	PARTS NO.	PARTS NAME	REMARKS	QTY	SUFFIX	CLR
	46	VJT2317-007	CASSETTE HOLDER	FOR A-MECHA	1		
	47	VJT2317-008	CASSETTE HOLDER	FOR B-MECHA	1		
	48	VKY4180-001	CASSETTE SPRING		4		
	49	VJD3867-002	C. STABILIZER		2		
	50	VYTS491-001	PAD		4		
	51	VKY4635-002	SPRING PLATE		2		
	52	SBSF2608Z	SCREW	FOR S.PLATE	2		
	53	VYH7941-005	LOCK LEVER(L)	FOR A MECHA	1		
	54	VYH7941-006	LOCK LEVER(R)	FOR B MECHA	1		
	55	VMA4643-001	SHIELD	FOR MECHA	2		
	56	SDST2603Z	SCREW	FOR MECHA+SHIEL	4		
	57	VKW5199-001	TENSION SPRING		2		
	58	VKZ4749-001	SPECIAL SCREW	FOR LOCK L+MECH	2		
	59	VKL7293-001	EJECT SAFTY(R)	EGC	1		
	60	SBSF3010Z	SCREW	FOR E.SAFTY(R)	1		
	61	VKW5069-002	TORSION SPRING	FOR E.SAFTY(R)	1		
	62	VKL7663-001	EJECT SAFTY(L)	EGC	1		
	63	SBSF3010Z	SCREW	FOR E.SAFTY(L)	1		
	64	VKW5104-003	TORSION SPRING	FOR E.SAFTY(L)	1		
	65	VJT2349-001	CASSETTE LID	FOR A MECHA	1		TN
		VJT2349-003	CASSETTE LID	FOR A MECHA	1		BK
	66	VJT2349-002	CASSETTE LID	FOR B MECHA	1		TN
		VJT2349-004	CASSETTE LID	FOR B MECHA	1		BK
	67	VXP5289-001	PUSH BUTTON	FOR EJECT	1		TN
		VXP5289-003	PUSH BUTTON	FOR EJECT	1		BK
	68	VXP5289-002	OPERAT.BUTTON	FOR EJECT	1		TN
		VXP5289-004	PUSH BUTTON	FOR EJECT	1		BK
	69	VKW3001-077	C.SPRING		2		
	70	VKL7262-002	REMOTE ARM	FOR A-MECHA	1		
	71	VKL7263-002	REMOTE ARM	FOR B-MECHA	1		
	72	VYH7773-001	BUTTON HOLDER		2		
	73	SBSF2610Z	SCREW	FOR B.H.+F.P.	2		
	74	VJF4039-00E	FOOT ASS'Y		4	C,J	TN
		E406379-008SS	FOOT ASS'Y		4	A,B,E,EN,G	BK
		VJF4039-00F	FOOT ASS'Y		4	U,UT	BK
	77	SBST3008Z	SCREW	FOR FOOT	4		
	78	VXL3025-001	KNOB	INPUT VOLUME	1		TN
		VXL3025-002	KNOB	INPUT VOLUME	1		BK
	79	VJK3652-001	FINDER LENS		1		TN
		VJK3652-003	FINDER LENS		1		BK
	80	VJC1964-202	TOP COVER		1		BK
		VJC1964-201	TOP COVER		1		TN
	82	VKZ4614-001	SPECIAL SCREW		4		
	83	SBST3006M	SCREW	FOR TOP COVER	2		
	84	VYN2349-M003PA	NAME PLATE		1	A	
		VYN2348-M104PA	NAME PLATE		1	C	
		VYN2349-M002PA	NAME PLATE		1	B	
		VYN2349-M007PA	NAME PLATE	FOR U VERSION	1	U,UT	
		VYN2349-M005PA	NAME PLATE		1	E,EN	
		VYN2348-M006PA	NAME PLATE	FOR J VERSION	1	J	
		VYN2349-M108PA	NAME PLATE	FOR G VERSION	1	G	
	86	VYSA1R3-043	SPACER	FOR HEAD WIRE	2		
	87	VMA4633-001	SHIELD PLATE	FOR Z702	1		
	88	DPSP3008Z	SCREW	Q901,Q903,Q909	3		
	90	E407097-001	HYATT L.LABEL		1	J	
	91	V04062-001	CONTI.PLUG		1	U,UT	
	92	VYH7979-001	CAP		1		
	93	SBSF2610Z	SCREW	FOR CAP	1		
	HS901	VMH4011-201	HEAT SINK		1		

9 Exploded View of Mechanism Component Parts

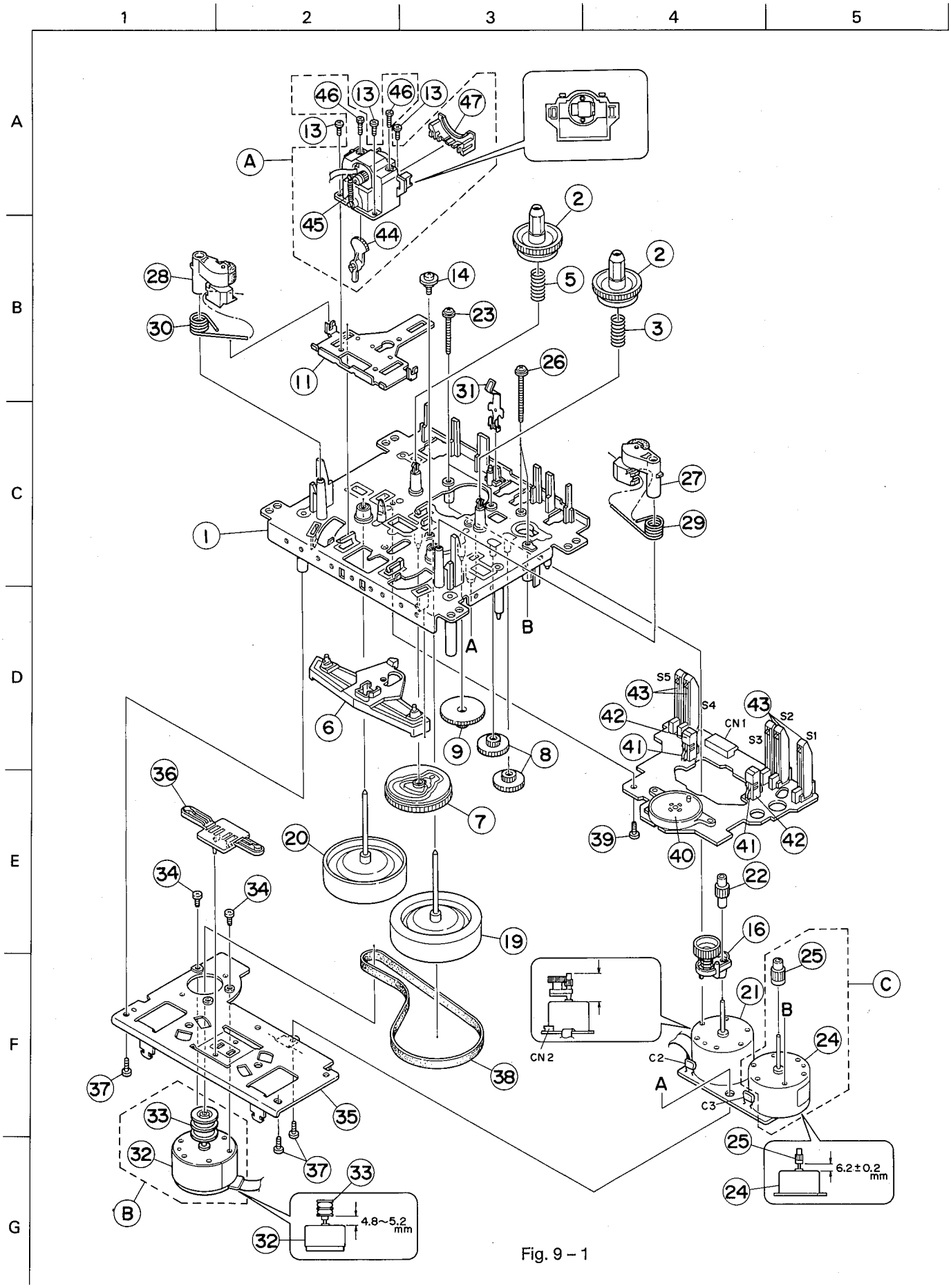

Fig. 9 – 1

● Mechanism Component Parts List

BLOCK NO. M2MM

⚠	REF.	PARTS NO.	PARTS NAME	REMARKS	QTY	SUFFIX	CLR
	A	VKS3629-00E	H.MOUNT ASS'Y	NO.44-47	1		
	B	BSI5B2LW-SA2	DC MOTOR ASS'Y	NO.32-33	1		
	C	MSN5D257A-SA1	DC MOTOR ASS'Y	NO.24-25	1		
	1	VKS1126-00B	CHASSIS B ASS'Y		1		
	2	VKS5428-00C	T-UP REEL ASSY		2		
	3	VKW5043-001	B.T. SPRING		1		
	5	VKW5043-001	B.T. SPRING		1		
	6	VKS3627-002	PINCH LEVER		1		
	7	VKS2224-002	CONTROL CAM		1		
	8	VKS5454-001	ACT GEAR(2)		2		
	9	VKS5455-001	ACT GEAR(3)		1		
	11	VKM3632-001	HEAD BASE	PRESS KIT S	1		
	13	SDST2004Z	SCREW		3		
	14	VKZ4708-001	SPECIAL SCREW		1		
	16	VKS5430-00CMM	FR ARM ASS'Y		1		
	19	VKF3195-00A	FLYWHEEL(R)ASS'		1		
	20	VKF3197-00A	FLYWHEEL(L)ASS'		1		
	21	MMN-6F4RA38	D.C.MOTOR	FOR REEL,MOTOR	1		
	22	VKS5432-001	REEL MOT. GEAR	GEAR KIT S	1		
	23	VKZ4705-001	SPECIAL SCREW		2		
	24	MSN-5D257A	D.C.MOTOR	FOR ACT,MOTOR K	1		
	25	VKS5433-001	ACT.MOTOR GEAR	GEAR KIT S	1		
	26	VKZ4705-002	SPECIAL SCREW		2		
	27	VKP4227-00B	PINCH R.(R) ASY		1		
	28	VKP4229-00B	PINCH R.(L) ASY		1		
	29	VKW5045-003	P.R. SP.(R)	FOR PINCH (R)	1		
	30	VKW5046-003	P.R. SP.(L)	FOR PINCH (L)	1		
	31	VKY4670-001	CASSETTE SPRING	PRESS KIT S	1		
	32	MSI-5B2LW	D.C.MOTOR	FOR CAP,MOTOR K	1		
	33	VKR4632-003MM	MOTOR PULLEY		1		
	34	SPSP2603Z	SCREW		2		
	35	VKM3636-002	FM. BRACKET	PRESS KIT S	1		
	36	VKS5327-005MM	THRUST PLATE		1		
	37	SBSF2608Z	SCREW		3		
	38	VKB3001-067	BELT		1		
	39	SDST2612Z	SCREW		1		
	40	VKS3616-00A	CAM SW UNIT	S6	1		
	41	DN6851-HI	HALL IC		2		
	42	VKS3630-001MM	IC HOLDER	IC1,IC2	2		
	43	MXS00220MVL0	CASSETTE SWITCH	S1,S2,S3,S4,S5	5		
	44	VKS3614-001	TURN OVER GEAR		1		
	45	VKW5063-003	HEAD SPRING		1		
	46	VKZ4629-003	SPECIAL SCREW		2		
	47	VKS3654-001	HEAD MT. COVER		1		
	C 2	QFV41HJ-104ZM	TF CAPACITOR	C2,C3	2		
	CN 1	VMC0234-R15	CONNECTOR	CN1	1		
	CN 2	VMC0234-R08	CONNECTOR	CN2	1		

10 Packing Illustration and packing parts list

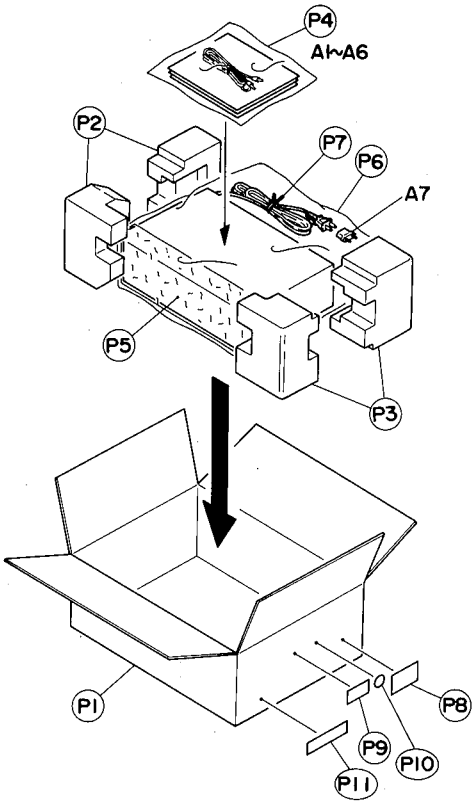

Fig. 10 – 1

● Packing Parts List

BLOCK NO. M3MM

⚠	REF.	PARTS NO.	PARTS NAME	REMARKS	QTY	SUFFIX	CLR
	P 1	VPC2348-M002	PACKING CASE		1		TN
		VPC2349-M002	CARTON		1		BK
	P 2	VPH2472-001	CUSHION (L)		1		
	P 3	VPH2472-002	CUSHION (R)		1		
	P 4	VPE3005-007	POLY BAG	FOR INSTRUCTION	1		
	P 5	VPK3001-012	SHEET		1		
	P. 6	E300196-031B	ENVELOPE	FOR SET UNIT	1		
	P 7	Q04141H	WIRE CLAMP	FOR POWER CORD	1		
	P 8	----------	SIRIAL TICKET		1		
	P 9	----------	EAN/UPC LABEL		1		
	P 10	QZLA001-011	MARK		1	E,EN,G	
	P 11	VND4247-005	VOLTAGE LABEL		1	U,UT	

● Accessories

BLOCK NO. M3MM

⚠	REF.	PARTS NO.	PARTS NAME	REMARKS	QTY	SUFFIX	CLR
	A 1	VMP0039-00D	PIN CORD		1		
	A 2	VNN2348-271M	INSTRUCTIONS		1	EN	
		VNN2348-661M	INSTRUCTIONS		1	C,E,EN,G,U,J	
		VNN2348-671M	INSTRUCTIONS		1	A,B,J	
	A 3	BT-56001-1	WARRANTY CARD		1	A	
		BT-20134	WARRANTY CARD		1	G	
		BT-20047F	WARRANTY CARD		1	J	
		BT20060	WARRANTY CARD		1	B	
		BT-52002-1	WARRANTY CARD		1	C	
		BT-20066A	WARRANTY CARD		1	B	
	A 4	BT-20137	SERVICE NETWORK		1	J	
		BT-20071B	SVC CENTER LIST		1	C	
		BT-56002-1	SERVIS CENTER L		1	A	
	A 5	E43486-340A	SAFETY I.SHEET		1	B	
		BT-20044G	SAFETY INST		1	J	
	A 6	EWP805-012	1P PLUG CORD(JE	FOR REMOTE	1		
	A 7	V04062-001	CONTI.PLUG		1	U,UT	

JVC
VICTOR COMPANY OF JAPAN, LIMITED
AUDIO PRODUCTS DIVISION, MAEBASHI PLANT 10-1, 1-chome, Ohwatari-machi, Maebashi-city, 371, Japan

Printed in Japan
-H0706-S-