JVC

SERVICE MANUAL

DVD DIGITAL THEATER SYSTEM

TH-M303, TH-M301

TH-M303
Area suffix
J ---------- U.S.A.
C ---------- Canada

TH-M301
Area suffix
J ---------- U.S.A.

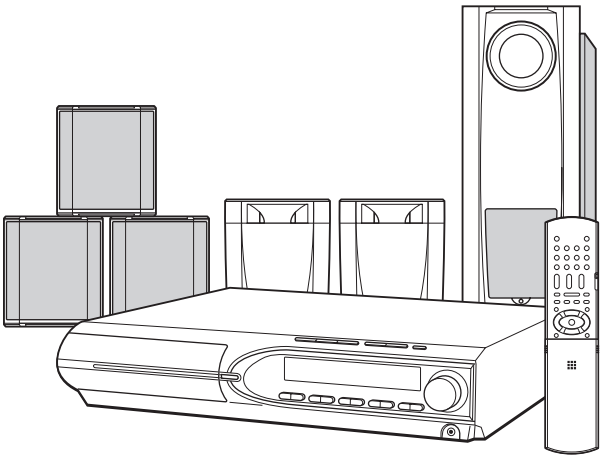

AV COMPU LINK
Digital Direct Progressive Scan

TABLE OF CONTENTS

1 PRECAUTION. 1-3
2 SPECIFIC SERVICE INSTRUCTIONS 1-6
3 DISASSEMBLY 1-7
4 ADJUSTMENT 1-31
5 TROUBLESHOOTING 1-33

No.MB184
2004/3

SPECIFICATION

Center unit (XV-THM606/XV-THM603/XV-THM505/XV-THM501/ XV-THM303/XV-THM301)

Audio section	Total Harmonic Distortion	0.02%
	NOTE	This value is measured at System cord CONNECTOR for reference.
	Digital input *1	DIGITAL IN (DBS) (OPTICAL): -21 dBm to -15 dBm (660 nm E30 nm)
Video section	Video System	NTSC
	Horizontal Resolution	500 lines
	Signal-to-Noise Ratio	64 dB
	Video output level	Composite:1.0 V(p-p)/75Ω
		S-video-Y:1.0 V(p-p)/75Ω
		S-video-C:0.286 V(p-p)/75Ω
		Component-Y:1.0 V(p-p)/75Ω
		Component-PB/PR:0.7 V(p-p)/75Ω
	Video input sensitivity/Impedance (VCR IN)	Composite:1.0 V(p-p)/75Ω
		S-video-Y:1.0 V(p-p)/75Ω
		S-video-C:0.286 V(p-p)/75Ω
Tuner section	Tuning Range	FM:87.5 MHz to 108.0 MHz
		AM:530 kHz to 1 710 kHz
	Power Requirements	AC 120 V, 60 Hz
General	Power Consumption	18 W (at operation) 2.0 W (in standby mode)
	Dimensions (W × H × D)	400 mm × 85 mm × 380 mm (15-3/4 inches × 3-3/8 inches × 15 inches)
	Mass	4.3 kg (9.5 lbs)

*1: Corresponding to Linear PCM, Dolby Digital, and DTS Digital Surround (with sampling frequency - 32 kHz, 44.1 kHz, 48 kHz)

Subwoofer (SP-PWM603/SP-PWM303/SP-PWM301)

Amplifier section	Front/Center/Surround	115 W (100 W *3) per channel, RMS at 4 Ω (Center/Surround)/ 125 W (115 W *3) per channel, RMS at 4 Ω (Front) at 1 kHz, with 10 % total harmonic distortion.
	Subwoofer	125 W (120 W *3), RMS at 4 Ω at 100 Hz, with 10 % total harmonic distortion.
Speaker section	Speaker unit	16 cm (6-5/16 inches) Bass-reflex, Magnetically Shielded
	Frequency Range	30 Hz to 200 Hz
General	Power Requirements	AC 120 V, 60 Hz
	Power Consumption	125 W (at operation) 0 W (in standby mode)
	Dimensions (W × H × D)	168.5 mm × 412 mm × 444 mm (6-11/16 inches × 16-1/4 inches × 17-1/2 inches)
	Mass	12.0 kg (26.5 lbs)

*3: For SP-PWM301

Front speakers (SP-THM303F)

Speakers	8.0 cm (3-3/16 inches) Bass-reflex, Magnetically Shielded
Power Handling Capacity	140 W
Impedance	4Ω
Frequency Range	90 Hz to 20 kHz
Dimensions (W × H × D)	106 mm × 119.5 mm × 102 mm (4-3/16 inches × 4-3/4 inches × 4-1/16 inches)
Mass	0.69 kg (1.6 lbs)

Surround speakers (SP-THM303S)

Speakers	8.0 cm (3-3/16 inches) Bass-reflex, Magnetically Shielded
Power Handling Capacity	140 W
Impedance	4Ω
Frequency Range	80 Hz to 20 kHz
Dimensions (W × H × D)	111.5 mm × 139 mm × 106.5 mm (4-7/16 inches × 5-1/2 inches × 4-1/4 inches)
Mass	0.63 kg (1.4 lbs)

Center Speaker (SP-THM303C)

Speakers	8.0 cm (3-3/16 inches) Bass-reflex, Magnetically Shielded
Power Handling Capacity	140 W
Impedance	4Ω
Frequency Range	90 Hz to 20 kHz
Dimensions (W × H × D)	106 mm × 119.5 mm × 102 mm (4-3/16 inches × 4-3/4 inches × 4-1/16 inches)
Mass	0.69 kg (1.6 lbs)

Designs & specifications are subject to change without notice.

SECTION 1
PRECAUTION

1.1 Safety Precautions

(1) This design of this product contains special hardware and many circuits and components specially for safety purposes. For continued protection, no changes should be made to the original design unless authorized in writing by the manufacturer. Replacement parts must be identical to those used in the original circuits. Services should be performed by qualified personnel only.

(2) Alterations of the design or circuitry of the product should not be made. Any design alterations of the product should not be made. Any design alterations or additions will void the manufacturers warranty and will further relieve the manufacture of responsibility for personal injury or property damage resulting therefrom.

(3) Many electrical and mechanical parts in the products have special safety-related characteristics. These characteristics are often not evident from visual inspection nor can the protection afforded by them necessarily be obtained by using replacement components rated for higher voltage, wattage, etc. Replacement parts which have these special safety characteristics are identified in the Parts List of Service Manual. Electrical components having such features are identified by shading on the schematics and by (⚠) on the Parts List in the Service Manual. The use of a substitute replacement which does not have the same safety characteristics as the recommended replacement parts shown in the Parts List of Service Manual may create shock, fire, or other hazards.

(4) The leads in the products are routed and dressed with ties, clamps, tubings, barriers and the like to be separated from live parts, high temperature parts, moving parts and/or sharp edges for the prevention of electric shock and fire hazard. When service is required, the original lead routing and dress should be observed, and it should be confirmed that they have been returned to normal, after reassembling.

(5) Leakage shock hazard testing
After reassembling the product, always perform an isolation check on the exposed metal parts of the product (antenna terminals, knobs, metal cabinet, screw heads, headphone jack, control shafts, etc.) to be sure the product is safe to operate without danger of electrical shock.Do not use a line isolation transformer during this check.

- Plug the AC line cord directly into the AC outlet. Using a "Leakage Current Tester", measure the leakage current from each exposed metal parts of the cabinet, particularly any exposed metal part having a return path to the chassis, to a known good earth ground. Any leakage current must not exceed 0.5mA AC (r.m.s.).
- Alternate check method
  Plug the AC line cord directly into the AC outlet. Use an AC voltmeter having, 1,000Ω per volt or more sensitivity in the following manner. Connect a 1,500Ω 10W resistor paralleled by a 0.15μF AC-type capacitor between an exposed metal part and a known good earth ground.
  Measure the AC voltage across the resistor with the AC voltmeter.
  Move the resistor connection to each exposed metal part, particularly any exposed metal part having a return path to the chassis, and measure the AC voltage across the resistor. Now, reverse the plug in the AC outlet and repeat each measurement. Voltage measured any must not exceed 0.75 V AC (r.m.s.). This corresponds to 0.5 mA AC (r.m.s.).

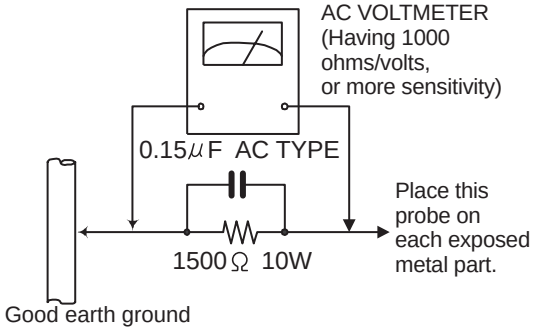

1.2 Warning

(1) This equipment has been designed and manufactured to meet international safety standards.
(2) It is the legal responsibility of the repairer to ensure that these safety standards are maintained.
(3) Repairs must be made in accordance with the relevant safety standards.
(4) It is essential that safety critical components are replaced by approved parts.
(5) If mains voltage selector is provided, check setting for local voltage.

1.3 Caution

Burrs formed during molding may be left over on some parts of the chassis.
Therefore, pay attention to such burrs in the case of preforming repair of this system.

1.4 Critical parts for safety

In regard with component parts appearing on the silk-screen printed side (parts side) of the PWB diagrams, the parts that are printed over with black such as the resistor (▬), diode (▮) and ICP (●) or identified by the " ⚠ " mark nearby are critical for safety. When replacing them, be sure to use the parts of the same type and rating as specified by the manufacturer.
(This regulation dose not Except the J and C version)

1.5 Preventing static electricity

Electrostatic discharge (ESD), which occurs when static electricity stored in the body, fabric, etc. is discharged, can destroy the laser diode in the traverse unit (optical pickup). Take care to prevent this when performing repairs.

1.5.1 Grounding to prevent damage by static electricity

Static electricity in the work area can destroy the optical pickup (laser diode) in devices such as laser products.
Be careful to use proper grounding in the area where repairs are being performed.

(1) Ground the workbench
Ground the workbench by laying conductive material (such as a conductive sheet) or an iron plate over it before placing the traverse unit (optical pickup) on it.

(2) Ground yourself
Use an anti-static wrist strap to release any static electricity built up in your body.

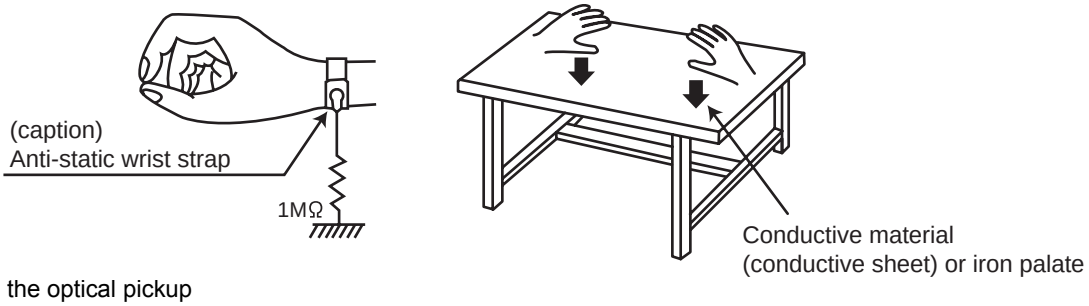

(3) Handling the optical pickup
- In order to maintain quality during transport and before installation, both sides of the laser diode on the replacement optical pickup are shorted. After replacement, return the shorted parts to their original condition.
(Refer to the text.)
- Do not use a tester to check the condition of the laser diode in the optical pickup. The tester's internal power source can easily destroy the laser diode.

1.6 Handling the traverse unit (optical pickup)

(1) Do not subject the traverse unit (optical pickup) to strong shocks, as it is a sensitive, complex unit.
(2) Cut off the shorted part of the flexible cable using nippers, etc. after replacing the optical pickup. For specific details, refer to the replacement procedure in the text. Remove the anti-static pin when replacing the traverse unit. Be careful not to take too long a time when attaching it to the connector.
(3) Handle the flexible cable carefully as it may break when subjected to strong force.
(4) I t is not possible to adjust the semi-fixed resistor that adjusts the laser power. Do not turn it.

1.7 Attention when traverse unit is decomposed

***Please refer to "Disassembly method" in the text for the pickup unit.**

- Apply solder to the short land sections before the flexible wire is disconnected from the connecto on the servo board. (If the flexible wire is disconnected without applying solder, the pickup may be destroyed by static electricity.)
- In the assembly, be sure to remove solder from the short land sections after connecting the flexible wire.

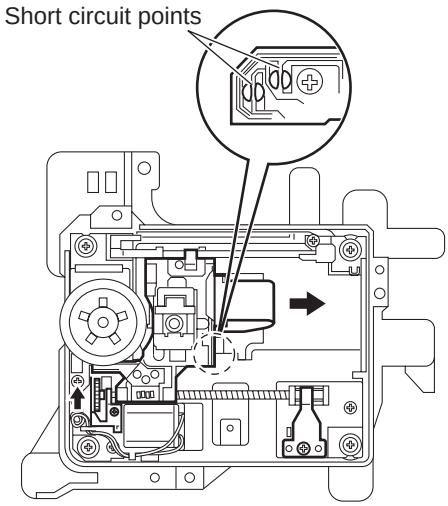

1.8 Importance administering point on the safety

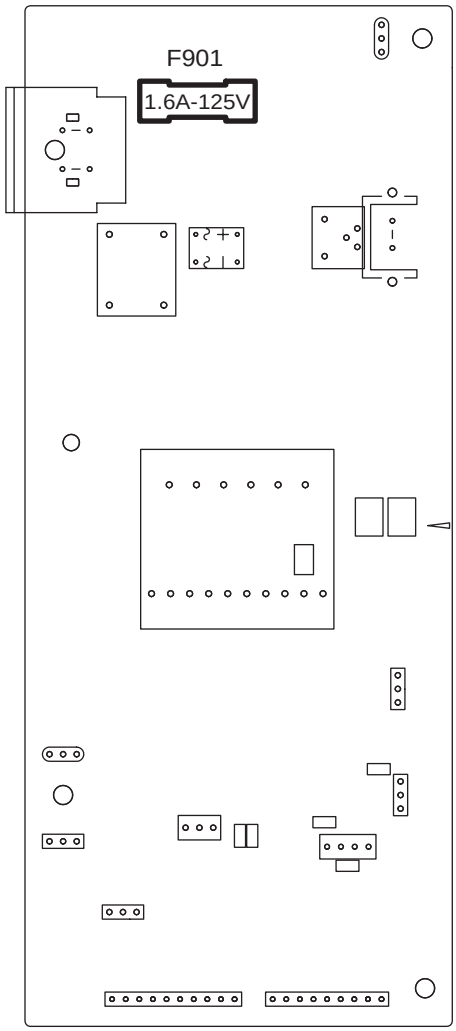

XV-THM303/XV-THM301

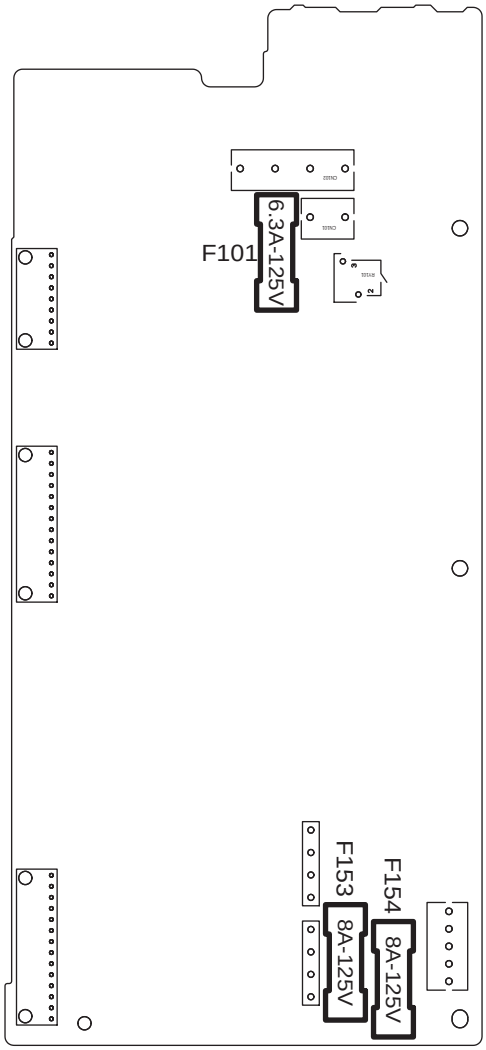

SP-PWM303/SP-PWM301

For USA and Canada / pour États - Unis d' Amérique et Canada

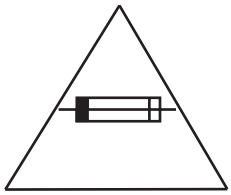

Caution: For continued protection against risk of fire, replace only with same type 1.6A/125V for F901, 6.3A/125V for F101, 8A/125V for F153 and F154. This symbol specifies type of fast operating fuse.

Précaution: Pour eviter risques de feux, remplacez le fusible de sureté de F901 comme le meme type que 1.6A/125V, et 6.3A/125 pour F101, et 8A/125V pour F153 et F154.
Ce sont des fusibles sûretes qui functionnes rapide.

SECTION 2
SPECIFIC SERVICE INSTRUCTIONS

This service manual does not describe SPECIFIC SERVICE INSTRUCTIONS.

SECTION 3
DISASSEMBLY

3.1 Main body section

3.1.1 Removing the metal cover (See Figs.1 to 4)

(1) From the both sides of the main body, remove the four screws **A** attaching the metal cover. (See Figs.1 and 2)
(2) From the back side of the main body, remove the three screws **B** attaching the metal cover. (See Fig.3)
(3) Lift the rear section of the metal cover in the direction of the arrow while extending the lower sections of the metal cover, release the five claws **a** using a longer screwdriver from the inside as required. (See Fig.4)

Note:
Do not damage any parts and boards inside the main body when releasing the claws **a** using a longer screwdriver.

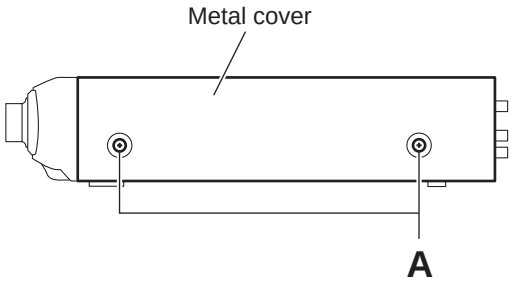

Fig.1

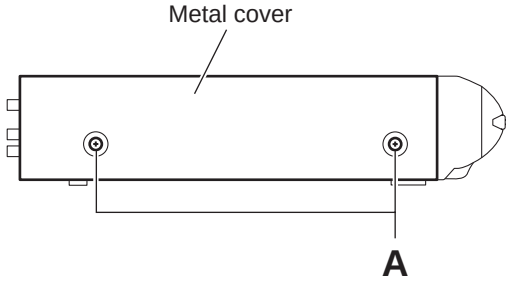

Fig.2

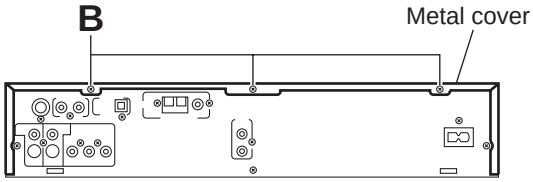

Fig.3

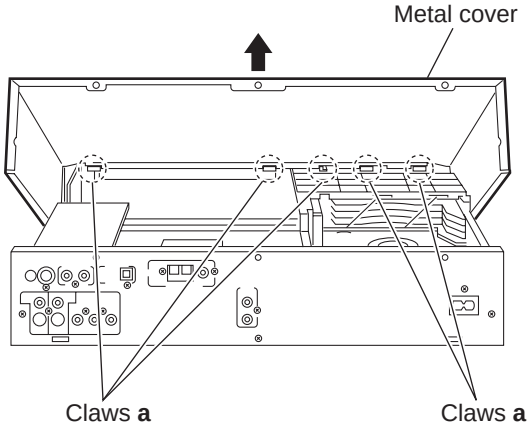

Fig.4

3.1.2 Removing the front panel assembly (See Figs.5 and 6)

- Prior to performing the following procedures, remove the metal cover.
  (1) From the top side of the main body, disconnect the parallel wires from the con nectors (CN456, CN457) on the main board. (See Fig.5)
  (2) Disconnect the ca rd wires from the con nectors (CN450, CN460) on the main board. (See Fig.5)
  (3) Remove the screw **C** attaching the earth wire to the main board. (See Fig.5)

  Reference:
  When attaching the screw **C**, attach the earth wire with it. (See Fig.5)
  (4) From the bottom side of the main body, remove the three screws **D** attaching the front panel assembly. (See Fig.6)
  (5) From the both and bottom sides of the main body, remove the front panel assembly in the direction of the arrow while releasing the joints **b** and **c**. (See Fig.6)

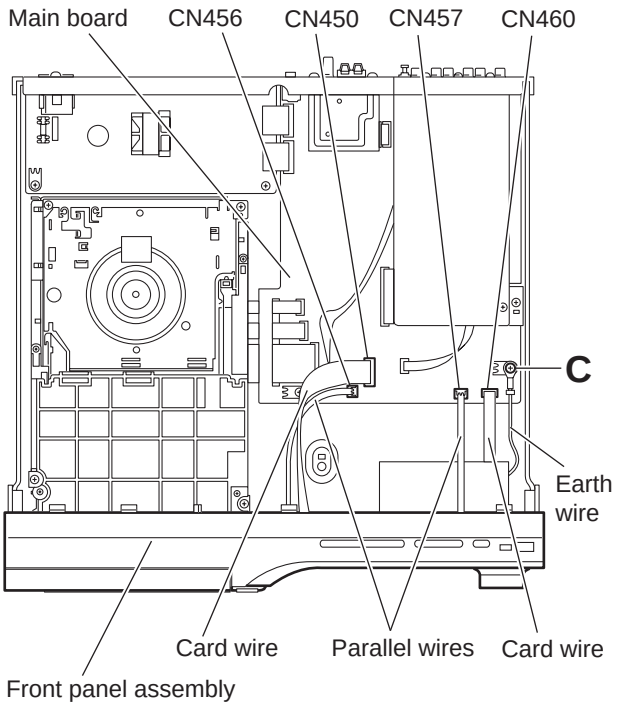

Fig.5

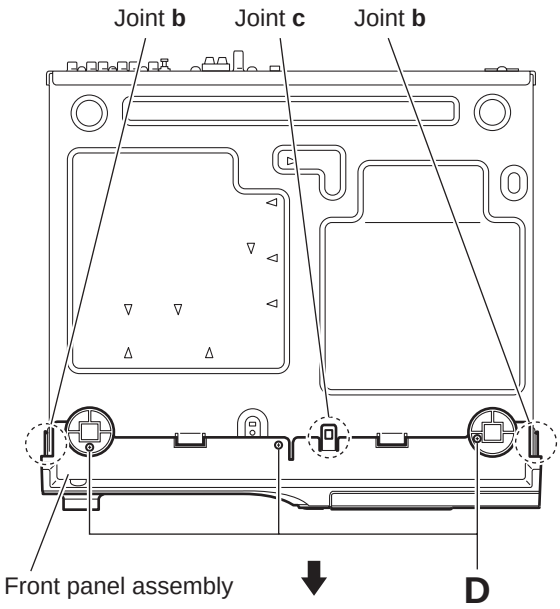

Fig.6

3.1.3 Removing the DVD changer mechanism assembly (See Fig.7)

- Prior to performing the following procedures, remove metal cover and front panel assembly.
  (1) From the top side of the main body, disconnect the card wires from the connectors (CN401 to CN403) on the main board.

  Reference:
  When connecting the card wires, connect them to the connectors (CN401 to CN403) on the main board after passing the card wires through the hole d on the main board.

  (2) Remove the four screws **E** attaching the DVD changer mechanism assembly on the bottom chassis.
  (3) Take out the DVD changer mechanism assembly in the upward direction.

Reference:
When attaching the DVD changer mechanism assembly, align the holes of the DVD changer mechanism assembly to the projections **e** on the bottom chassis.

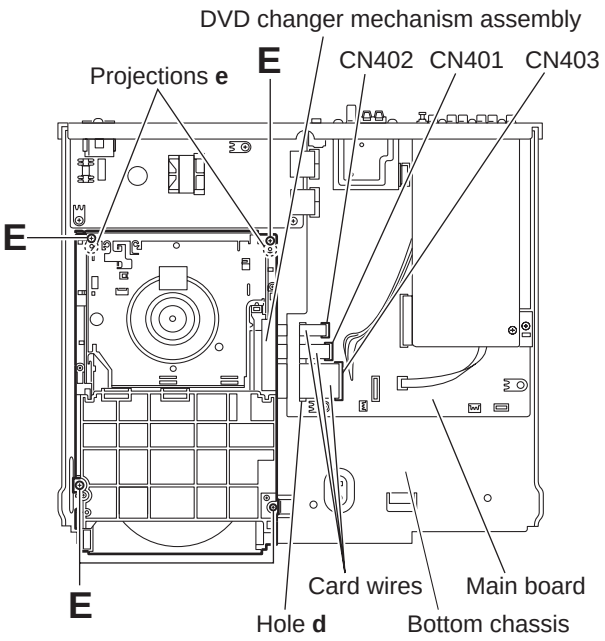

Fig.7

3.1.4 Removing the rear panel (See Fig.8)

- Prior to performing the following procedures, remove the metal cover.
  (1) From the back side of the main body, remove the screw **F** and twelve screws **G** attaching the rear panel.

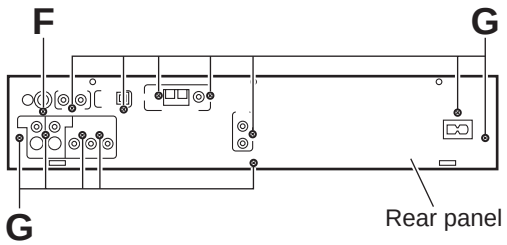

Fig.8

3.1.5 Removing the audio & digital input board (See Figs.9 and 10)

- Prior to performing the following procedures, remove the metal cover.
  (1) From the top side of the main body, disconnect the card wires from the con nectors (CN411, CN412) on the main board. (See Fig.9)
  (2) Remove the screw **H** attaching the audio & digital input board to the bracket(DSP). (See Fig.9)
  (3) From the back side of the main body, remove the screw **J** and two screws **K** attaching the audio & digital input board to the rear panel. (See Fig.10)
  (4) Take out the audio & digital input board from the main body.

3.1.6 Removing the tuner (See Figs.9 and 10)

- Prior to performing the following procedures, remove the metal cover.
  (1) From the top side of the main body, disconnect the card wire from the connector CN1 on the tuner. (See Fig.9)
  (2) From the back side of the main body, remove the two screws **L** attaching the tuner to the rear panel. (See Fig.10)
  (3) Take out the tuner from the main body.

3.1.7 Removing the power supply board (See Figs.9 and 10)

- Prior to performing the following procedures, remove the metal cover.
  (1) From the top side of the main body, disconnect the parallel wires from the connectors (CN404 to CN407) on the main board. (See Fig.9)
  (2) Remove the three screws **M** attaching the power supply board. (See Fig.9)
  (3) From the back side of the main body, remove the screw **N** attaching the power supply board to the rear panel. (See Fig.10)
  (4) Take out the power supply board from the main body.

Reference:

Remove the rear panel as required. (See removing the rear panel)

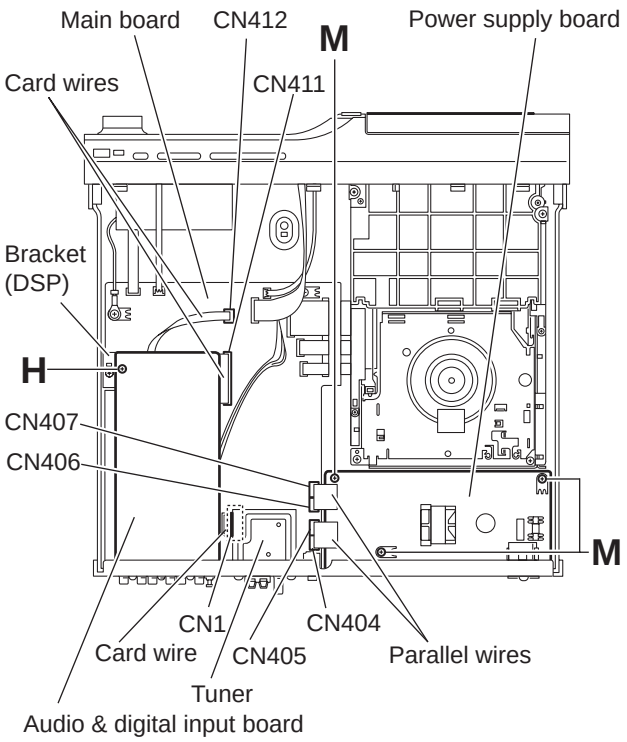

Fig.9

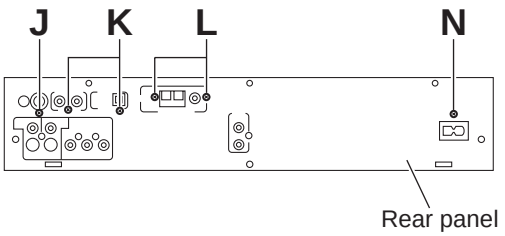

Fig.10

3.1.8 Removing the main board (See Fig.11)

- Prior to performing the following procedures, remove the metal cover, rear panel, audio & digital input board and tuner.
  (1) From the top side of the main body, disconnect the card wires from the connectors (CN401 to CN403, CN450 and CN460) on the main board.

  Reference:
  When reassembling, connect the card wires to the connectors (CN401 to CN403) on the main board after passing the card wires through the hole f on the main board.

  (2) Disconnect the parallel wires from the connectors (CN404 to CN407, CN456 and CN457) on the main board.
  (3) From the top side of the main body, remove the two screws **P** and screw **P'** attaching the main board on the bottom chassis.

  Reference:
  When attaching the screw **P'**, attach the earth wire with it. (See Fig.11)

  (4) Take out the main board from the main body.

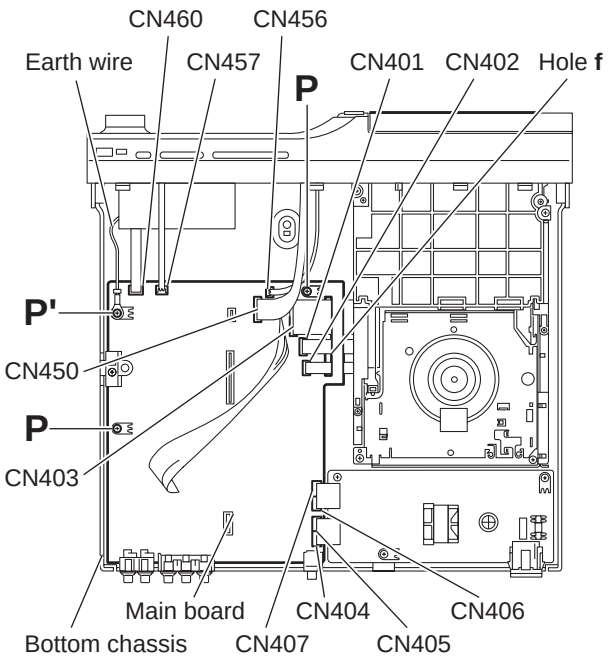

Fig.11

3.2 Front panel assembly section

- Prior to performing the following procedures, remove the metal cover and front panel assembly.

3.2.1 Removing the phone jack board (See Fig.1)

(1) From the inside of the front panel assembly, remove the screw **A** and screw **A'** attaching the phone jack board.

Reference:

- When attaching the phone jack board, align the projections **a** of the front panel assembly to the holes of the phone jack board.
- When attaching the screw **A'**, attach the earth wi re with it.

(2) Take out the phone jack board from the front panel assembly.

3.2.2 Removing the connect board (See Fig.1)

(1) From the inside of the front panel assembly, disconnect the card wire from the connector CN561 on the connect board.

(2) Remove the two screws **B** attaching the connect board.

Reference:

When attaching the connect board, align the projections **b** of the front panel assembly to the holes of the connect board.

(3) Take out the connect board from the front panel assembly.

3.2.3 Removing the operation board (See Fig.1)

(1) From the inside of the front panel assembly, remove the three screws **C** attaching the operation board.

Reference:

When attaching the o peration board, align the projections **c** of the front panel assembly to the holes of the operation board.

(2) Take out the operation board with the button(top).

3.2.4 Removing the front board (See Figs.2 and 3)

- Prior to performing the following procedures, remove the operation board.

(1) From the front side of the front panel assembly, pull out the volume knob in the direction of the arrow. (See Fig.2)

(2) From the inside of the front panel assembly, remove the seven screws **D** attaching the front board. (See Fig.3)

Reference:

When attaching the front board, align the projections **d** of the front panel assembly to the holes of the front board. (See Fig.3)

(3) Take out the front board and remove the solder from the soldered point **e** to remove the parallel wire. (See Fig.3)

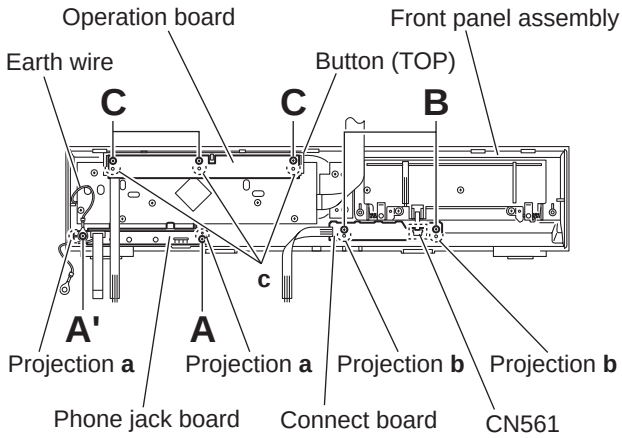

Fig.1

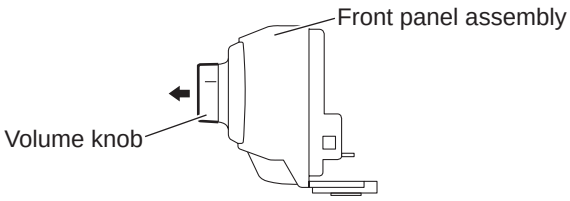

Fig.2

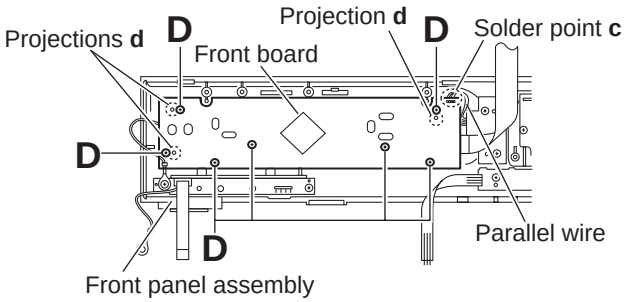

Fig.3

3.2.5 Removing the power key board (See Fig.4)

(1) From the inside of the front panel assembly, remove the two screws **E** attaching the power key board.

Reference:

When attaching the power key board, align the projections **f** of the front panel assembly to the holes of the power key board.

(2) Take out the power key board and remove the solder from the soldered point **g** to remove the parallel wire.

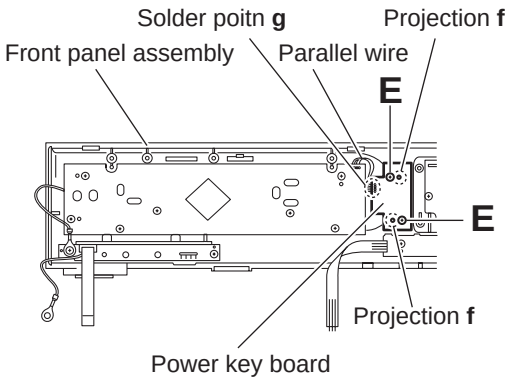

Fig.4

3.2.6 Removing the illumination board (See Figs.5 and 6)

(1) Open the DVD door of the front panel assembly and remove the three screws **F** attaching the door holder to the DVD door. (See Fig.5)

(2) Remove the DVD door from the door holder. (See Fig.5)

(3) From the inside of the DVD door, disconnect the card wire from the connector CN551 on the illumination board. (See Fig.6)

(4) Take out the illumination board from the DVD door.

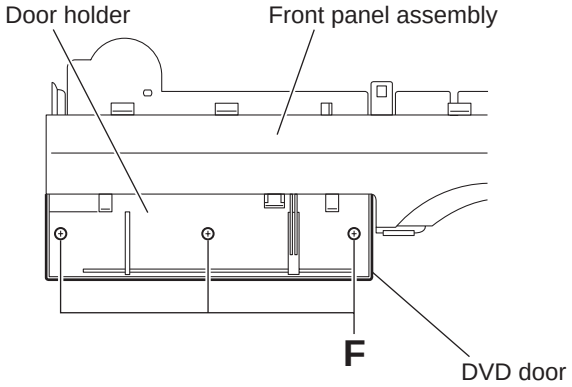

Fig.5

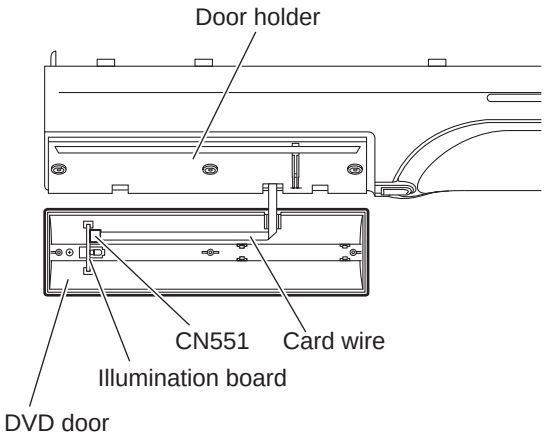

Fig.6

3.3 DVD changer mechanism assembly section

- Prior to performing the following procedures, remove the metal cover, front panel assembly and the DVD changer mechanism assembly.

3.3.1 Removing the tray assemblies (See Figs.1 to 5)

(1) Remove the two screws **A** from the top cover and release the two joints **a** on the both sides of the DVD changer mechanism assembly. (See Figs.1 and 2)

(2) Remove the two rods from the top cover and remove the top cover from the lifter assembly. (See Figs.1 and 2)

(3) Remove the open det lever on the left side of the DVD changer mechanism assembly. (See Fig.3)

(4) From the right side of the DVD changer mechanism assembly, draw out the tray assemblies toward the front while pushing the part **b** of the side (R) assembly. (See Fig.4)

Attention:

The tray can be locked if all tray assemblies are attached.

(5) From the top side of the DVD changer mechanism assembly, move the stopper tabs **c** in the direction of the arrow and release them. Pull out the tray assemblies from the DVD changer mechanism assembly. (See Figs.4 and 5)

Caution:

Remove the tray assembly from top tray 5 in order.

Attention:

When reattaching the tray assembly, or when removing the disc remaining inside, refer to another section "3.3.15 Taking out the disc in the play mode".

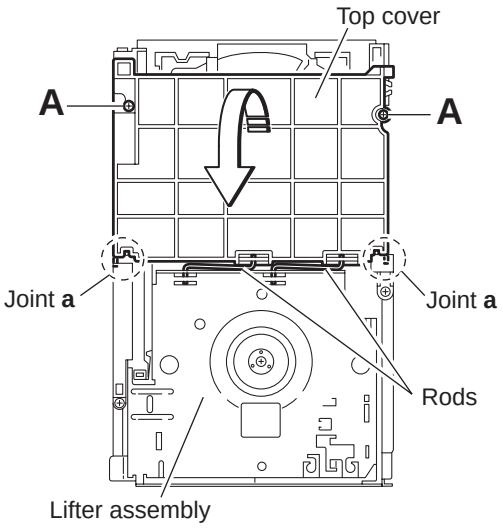

Fig.1

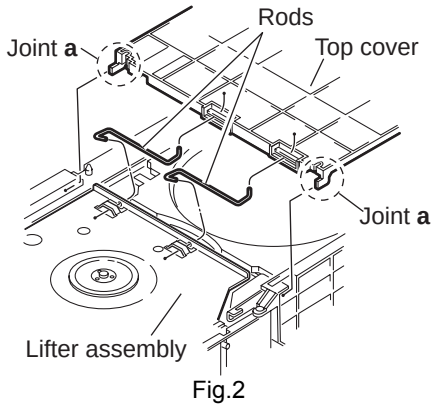

Fig.2

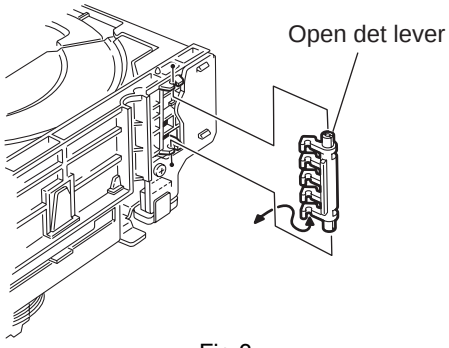

Fig.3

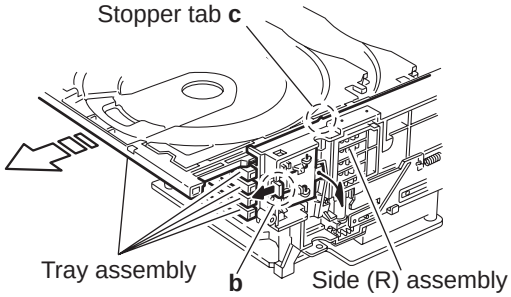

Fig.4

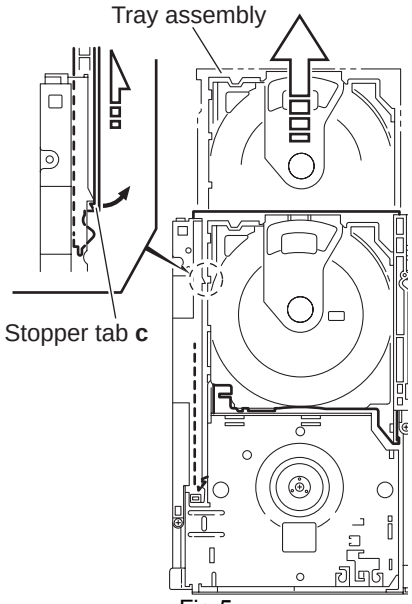

Fig.5

3.3.2 Removing the DVD servo board (See Figs.6 to 8)

- Prior to performing the following procedures, remove the tray assemblies.
  (1) From the topside of the DVD changer mechanism assembly, solder the short-circuit points **d** on the DVD pick up. (See Fig.6)

  Caution:
  Solder the short-circuit points **d** on the DVD pickup before disconnecting the flexible wire extending from the DVD pickup. If you do not follow this instruction, the DVD pickup may be damaged.

  (2) From the bottom side of the DVD changer mechanism assembly, disconnect the card wires from the connectors CN201 and CN451 and the wires from the connectors CN452 and CN453 on the DVD servo board. (See Fig.7)
  (3) Remove the two screws **B** attaching the bracket to the DVD changer mechanism assembly, and reverse the DVD servo board. (See Fig.7)
  (4) From the reverse side of the DVD servo board, disconnect the card wire from the connector CN101 in the direction of the arrow 1 on the DVD servo board. (See Fig.8)
  (5) Take out the DVD servo board.

Caution:
Unsolder the solders from the short-circuit points **d** after reassembling.

Reference:
When connecting the card wire to the connector CN201, let the wire through the slots **e**.

3.3.3 Removing the switch board (See Fig.7)

(1) From the bottom side of the DVD changer mechanism assembly, disconnect the wires from connectors CN452 and CN453 on the DVD servo board.
(2) Remove the screw **C** attaching the switch board to the DVD changer mechanism assembly.
(3) Release the wires from the slots **f** of the switch board.

Caution:
When reassembling, let the wires through the slots **f** of the switch board.

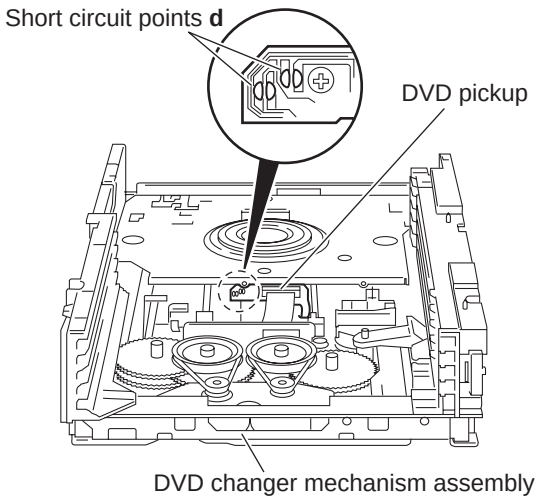

Fig.6

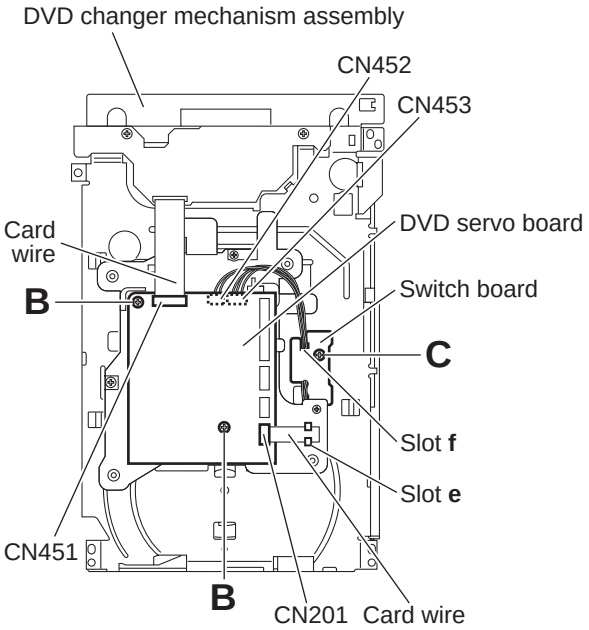

Fig.7

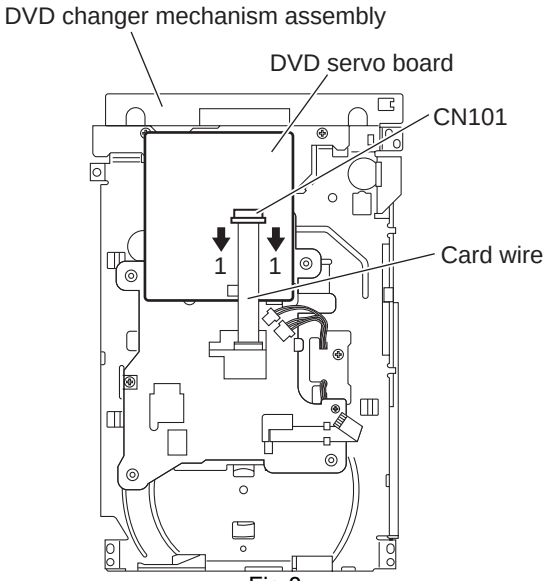

Fig.8

3.3.4 Removing the motor board (See Figs.9 and 10)

(1) From the top side of the DVD chnager mechanism assembly, remove the two bel ts from the motor pul leys. (See Fig.9)

Caution:

Take care not to attach grease on the belt.

(2) Remove the four screws **D** attaching the motors to the chassis assembly. (See Fig.9)

(3) From the bottom side of the DVD changer mechanism assembly, remove the two screws **E**. (See Fig.10)

(4) Disconnect the connector CN2 on the motor board from the tray switch bo ard and remove the motor board. (See Fig.10)

(5) Disconnect the ca rd wire from the co nnector CN1 on the motor board. (See Fig.10)

Caution:

- When connecting the card wire, let the card wire through the slots **g** of the motor board. (See Fig.10)
- When reattaching the motor, turn the side where the label should be put to the front side. (See Fig.10)

Reference:

You need not to remove the tray assemblies, and in such case, move it.

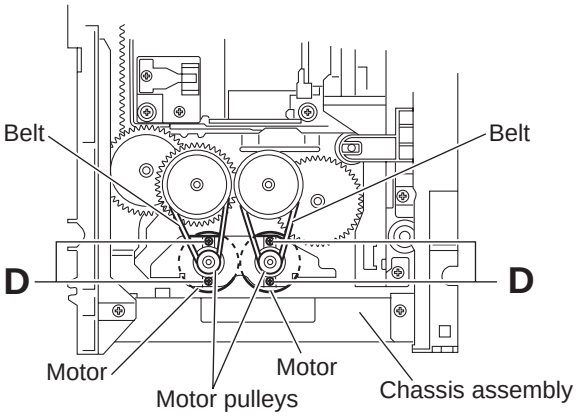

Fig.9

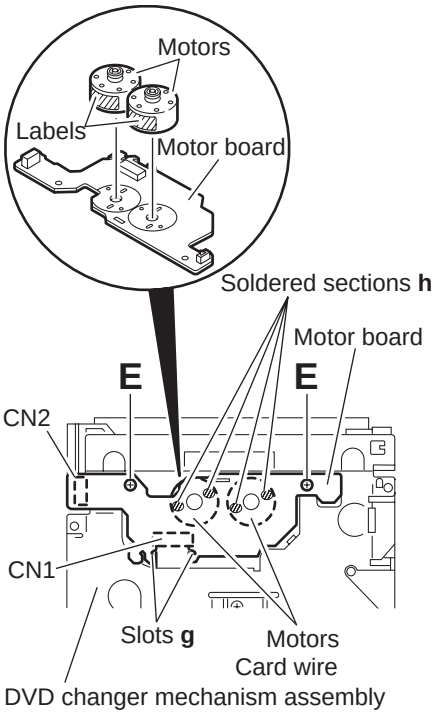

Fig.10

3.3.5 Removing the motor (See Fig. 10)

- Prior to performing the following procedures, remove the motor board.

(1) From the reverse side of the motor board, unsolder the four soldered sections **h** on the motor board.

(2) From the forward side of the motor board, remove the motors.

3.3.6 Removing the DVD traverse mechanism assembly (See Fig.11)

- Prior to performing the following procedures, remove the tray assemblies.

(1) From the top side of the DVD changer mechanism assembly, disconnect the card wire from the connector CN451 on the DVD servo board.

(2) Disconnect the w ires from the connectors CN452 and CN453 on the DVD servo board.

(3) Remove the three screws **F** attaching the D VD traverse mechanism assembly.

(4) Take out the DVD traverse mechanism assembly with DVD servo board from the DVD changer mechanism assembly.

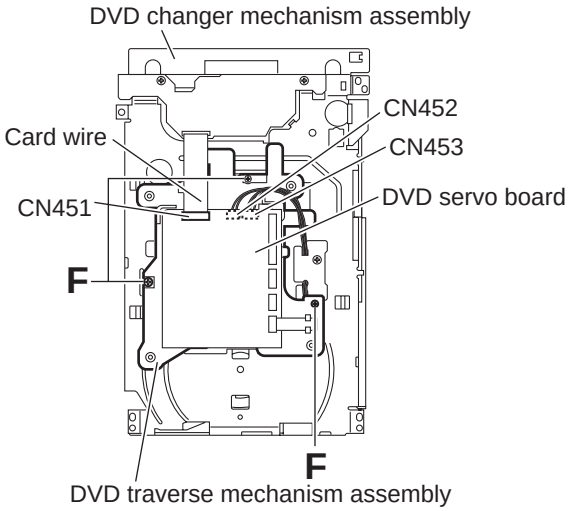

Fig.11

3.3.7 Removing the DVD pickup (See Figs.12 to 14)

- Prior to performing the following procedures, remove the tray assemblies and DVD traverse mechanism assembly.
  (1) From the topside of the DVD traverse mechanism assembly, solder the short-circuit points **i** on the DVD pick up. (See Fig.12)

  Caution:
  Solder the short-circuit points **i** on the DVD pickup before disconnecting the flexible wire extending from the DVD pickup. If you do not follow this instruction, the DVD pickup may be damaged.

  (2) Disconnect the flexible wire from the connector on the DVD pickup. (See Fig.12)
  (3) Turn the screw shaft gear in the direction of the arrow 1 to move the DVD pickup in the direction of the arrow 2. (See Fig.12)
  (4) Remove the screw **G** attaching the gear holder. (See Fig.12)
  (5) Remove the screw **H** attaching the SS adj. spring. (See Fig.12)
  (6) Move the DVD pickup in the direction of the arrow and remove the screw shaft from the section **j** on the screw shaft holder. (See Fig.13)
  (7) Remove the section **k** of the DVD pickup from the guide shaft. (See Fig.13)
  (8) Remove the two screws **J** attaching the rack arm to the DVD pickup. (See Fig.14)
  (9) Pull the screw shaft from the DVD pickup in the direction of the arrow. (See Fig.14)

3.3.8 Attaching the DVD pickup (See Figs.12 to 14)

(1) Attach the screw shaft to the DVD pickup and attach the rack arm with the screws **J**. (See Fig.14)

Reference:
After attaching the screw shaft to the DVD pickup, attach the screw shaft collar to the screw shaft. (See Fig.14)

(2) Attach the section **k** of the DVD pickup to the guide shaft first and attach the screw shaft to the section **j** on the screw shaft holder. (See Fig.14)
(3) Attach the SS adj. spring and gear holder with the screws **G** and **H**. (See Fig.12)
(4) Turn the screw shaft gear to move the DVD pickup toward the left. (See Fig.12)
(5) Connect the flexible wire to the connector on the DVD pickup. (See Fig.12)

Caution:
Unsolder the solders from the short-circuit points **i** after connecting the flexible wire.

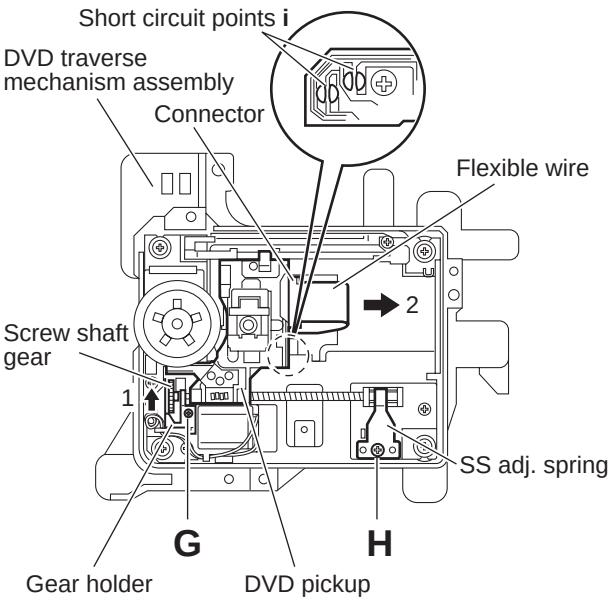

Fig.12

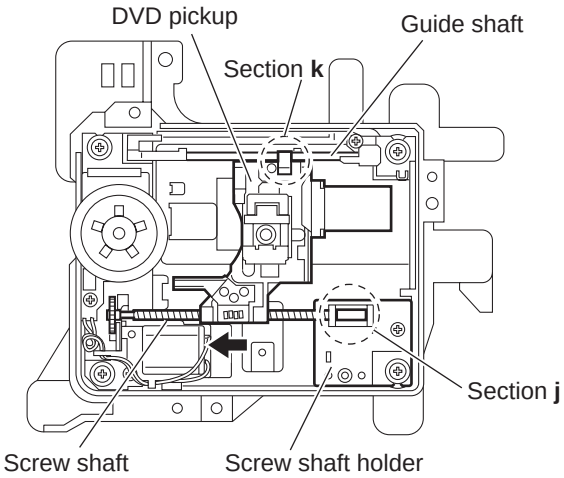

Fig.13

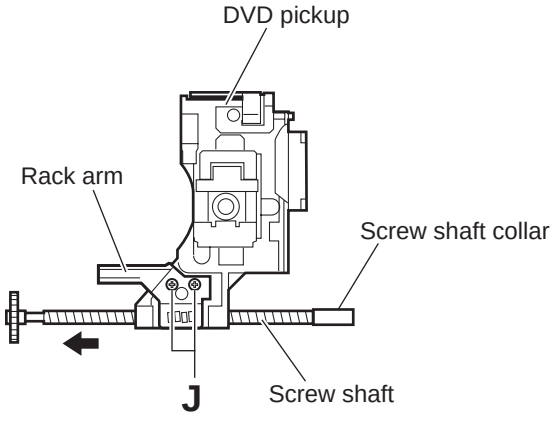

Fig.14

3.3.9 Removing the spindle motor board (See Figs.15 and 16)

- Prior to performing the following procedures, remove the tray assemblies and DVD traverse mechanism assembly.
  (1) From the topside of the DVD traverse mechanism assembly, remove the four screws **K** attaching the DVD traverse mechanism assembly to the DVD traverse mechanism base. (See Fig.15)
  (2) Remove the wires from the soldered section **m** on the spindle motor board. (See Fig.15)
  (3) Remove the screw **L** attaching the spindle motor board. (See Fig.15)
  (4) From the bottom side of the DVD traverse mechanism assembly, remove the three screws **M** attaching the spindle motor board. (See Fig.16)

Reference:

When attaching the spindle motor board, let the card wire through the hole **n** on the motor base. (See Fig.15)

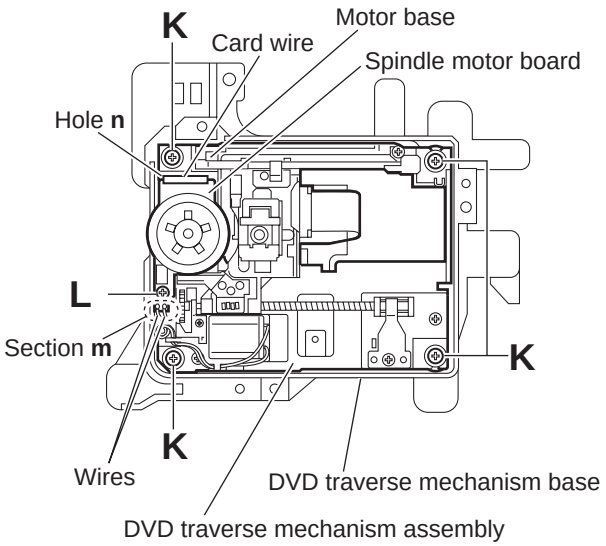

Fig.15

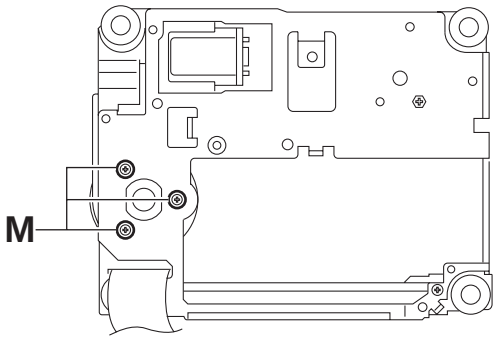

Fig.16

3.3.10 Removing the feed motor (See Figs.17 and 18)

- Prior to performing the following procedures, remove the tray assemblies, DVD traverse mechanism assembly, DVD pickup and spindle motor board.
- Remove the wires of the feed motor as required.
  (1) Remove the middle gear in the direction of the arrow. (See Fig.17)
  (2) Remove the screw **N** and screw **P** attaching the motor base.
  (3) Remove the screw **Q** attaching the feed motor to the motor base. (See Fig.18)
  (4) Take out the feed motor from the motor base.

Reference:

After attaching the feed motor, let the wires through the sections **p** and **q** on the motor base. (See Fig.17)

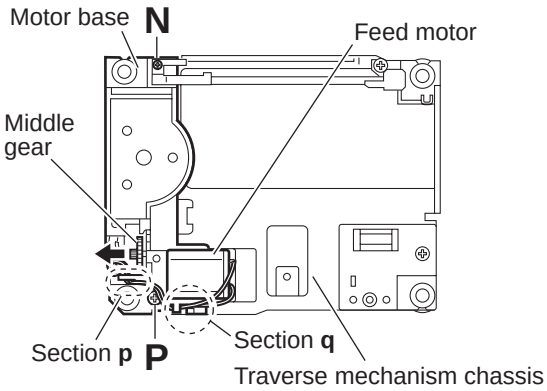

Fig.17

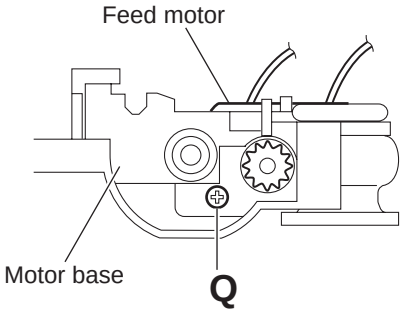

Fig.18

3.3.11 Removing the side (L) assembly and tray switch board (See Figs.19 to 23)

- Prior to performing the following procedures, remove the tray assemblies.
  (1) From the topside of the DVD changer mechanism assembly, remove the two screws **R** attaching the side (L) assembly. (See Fig.19)
  (2) From the left side of the DVD changer mechanism assembly, removing the spacer fixing the tray switch board and motor board. (See Fig.20)
  (3) Disconnect the connector CN3 on the tray switch board from the motor board and detach the side (L) assembly in an upward direction. (See Fig.20)
  (4) Remove the screw **S** attaching the tray switch board to the side (L) assembly. (See Fig.21)
  (5) Release the joint tab **r** of the side (L) assembly in the direction of the arrow 1 and release the joint tab **s** while removing the tray switch board in the direction of the arrow 2. (See Fig.21)

Reference:

After attaching the tray switch board to the motor board, fix them with spacers.

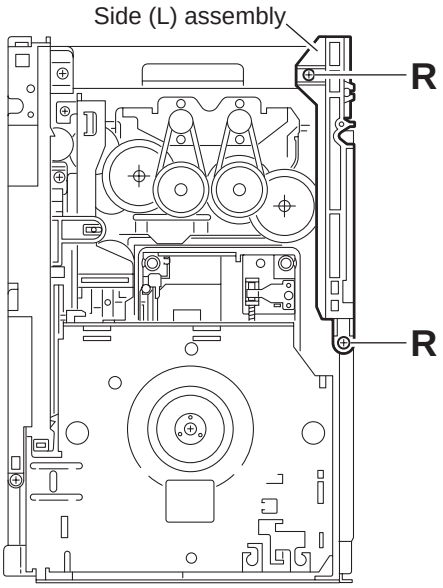

Fig.19

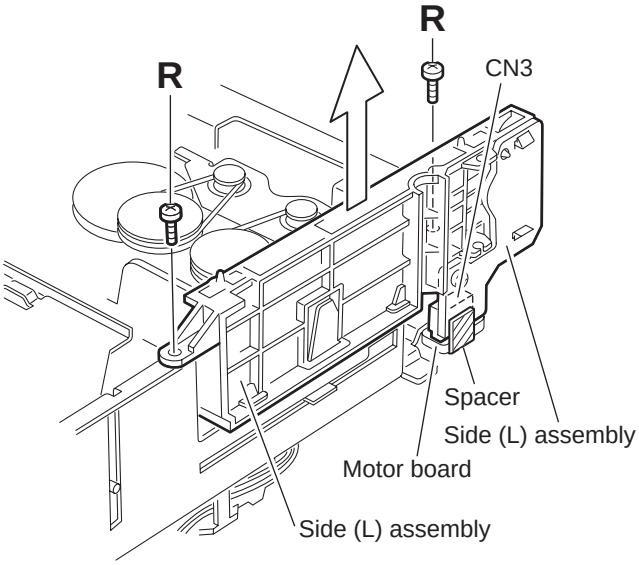

Fig.20

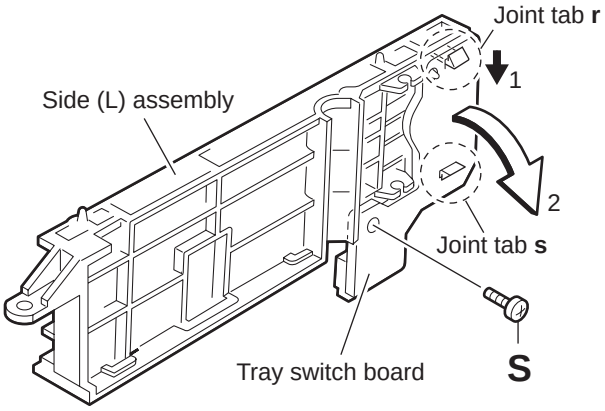

Fig.21

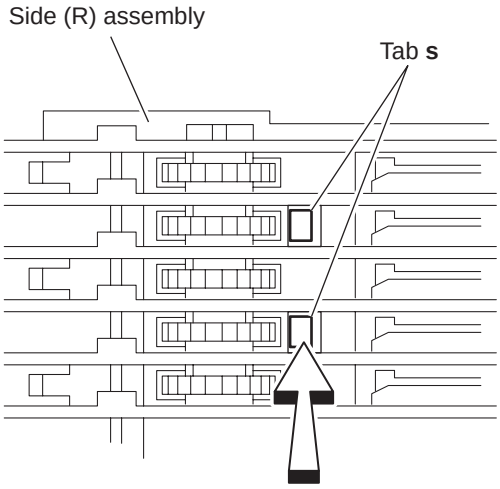

Fig.22

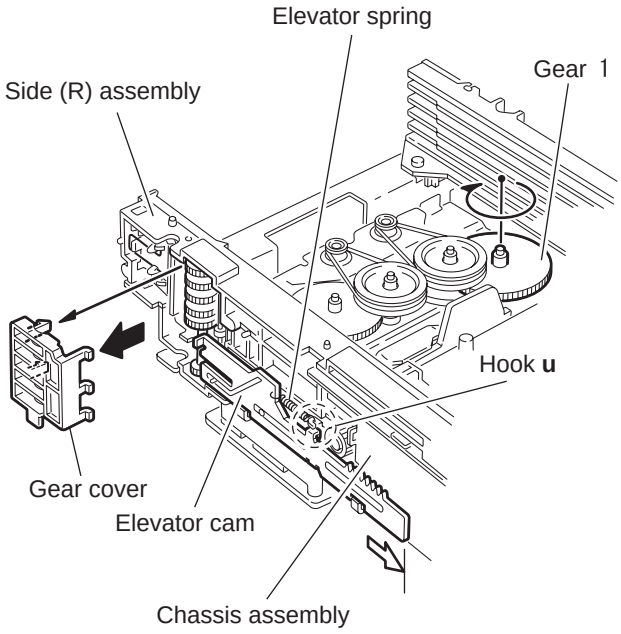

Fig.23

3.3.12 Removing the side (R) assembly (See Fig.22 to 26)

- Prior to performing the following procedures, remove the tray assemblies and DVD servo board.
- When removing the DVD servo board, it is not necessary to remove the DVD servo board from the bracket.

(1) From the inside of the side (R) assembly, release the two tabs **t** of the gear cover and remove the gear cover outward. (See Figs.22 and 23)

(2) From the right side of the DVD changer mechanism assembly, remove the elevator spring attached to the hook **u** of the chassis assembly. (See Figs.23 and 24)

(3) From the topside of the DVD changer mechanism assembly, turn the gear 1 clockwise to move the elevator cam rearward. (See Fig.24)

(4) Move the two slots **v** and joint **w** of the elevator cam and remove the elevator cam outward. (See Fig.24)

(5) Remove the three screws **T** and detach the side (R) assembly upward. (See Figs.25 and 26)

Caution:

When reattaching the side (R) assembly, make sure to fit the shaft section **x** into the slot of the select lever. (See Fig.25)

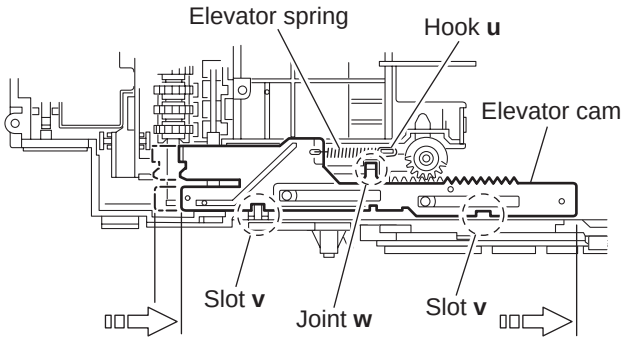

Fig.24

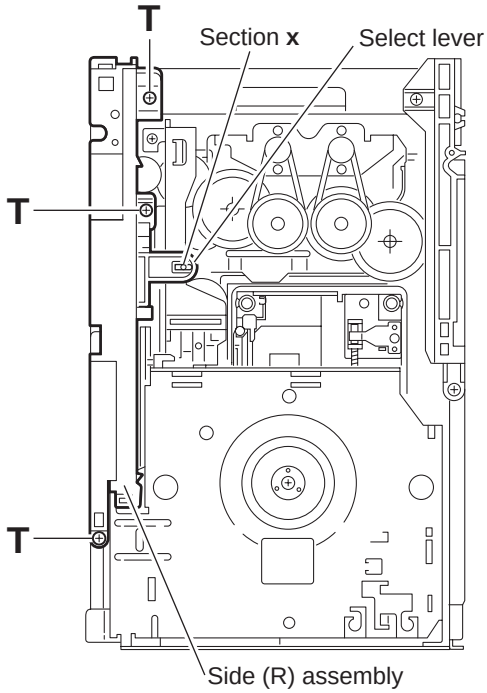

Fig.25

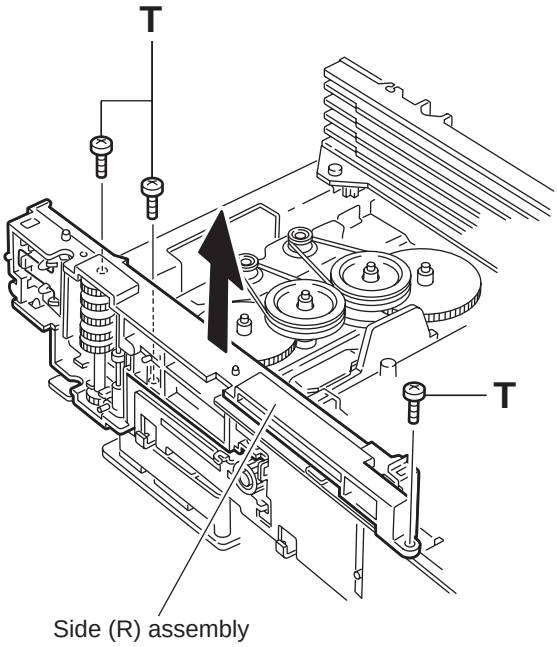

Fig.26

3.3.13 Removing the lifter assembly (See Figs.27 to 31)

- Prior to performing the following procedures, remove the tray assembies, DVD servo board, side (L) assembly and side (R) assembly.
- When removing the DVD servo board, it is not necessary to remove the DVD servo board from the bracket.
  (1) From the topside of the DVD changer mechanism assembly, turn the gear 1 clockwise to move the lifter assembly upward. (See Figs.27 and 28)
  (2) Turn the gear 2 clo ckwise to move the ho ok toward the front until it stops. (See Figs.27 and 28)
  (3) Move the hook stopper in the direction of the arrow 2 while pushing the tab **y** of the hook stopper to unlock it in the direction of the arrow 1 and release four joints **z** to detach from the rack holder. (See Fig.29)
  (4) Release the rod from part **aa**. (See Fig.29)
  (5) Turn the gear 1 clockwise again to move the lifter assembly upward. (See Fig.30)
  (6) Remove the lifter assembly from the DVD changer mechanism assembly upward at the positions **ab** where the four pins on the both sides of the lifter assembly fit to the notches of the chassis assembly. (See Fig.30)
  (7) Move the lifter assembly in the direction of the arrow and release it from the hook. (See Fig.31)

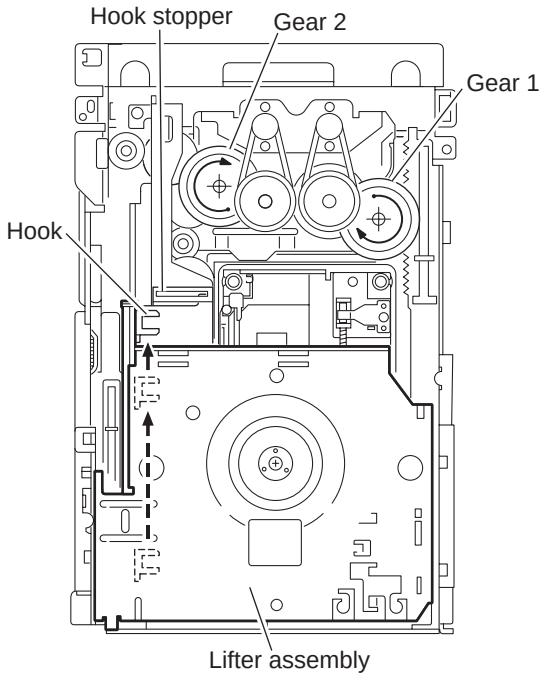

Fig.27

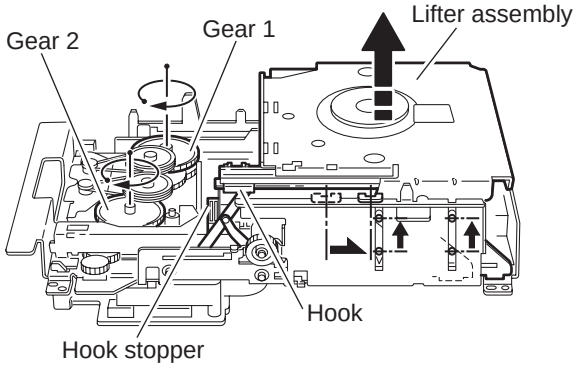

Fig.28

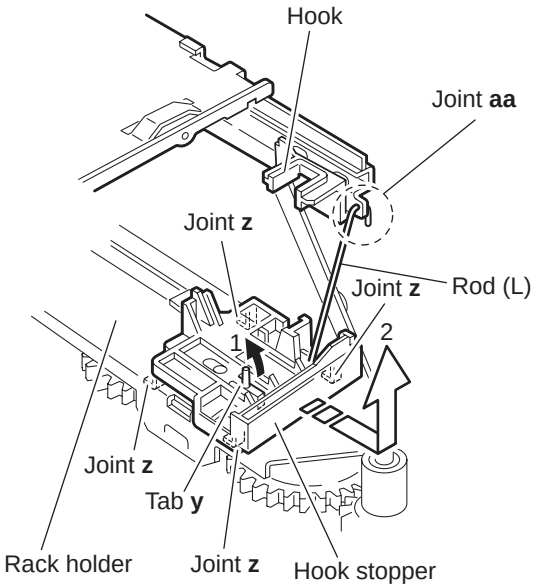

Fig.29

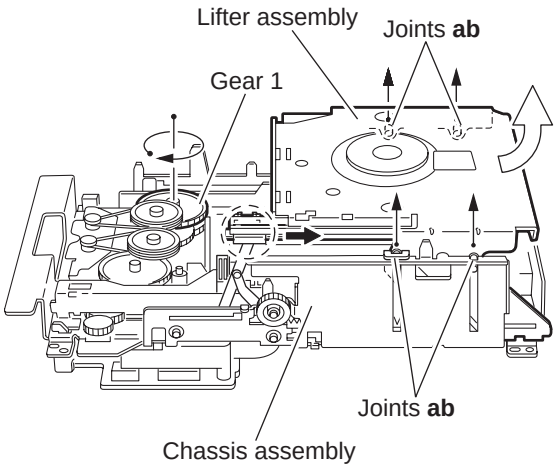

Fig.30

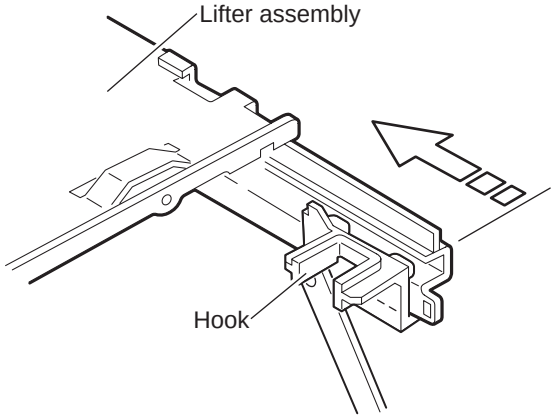

Fig.31

3.3.14 Removing the rack holder assembly and sensor assembly (See Figs.32 to 38)

- Prior to performing the following procedures, remove the tray assemblies, side (L) assembly, side (R) assembly and lifter assembly.

Reference:

If the slide gear of the DVD changer mechanism assembly places at joint **ac** of the rack holder assembly, turn the gear 1 counterclockwise to move the slide gear in the direction of the arrow. Then Remove the rack holder assembly. (See Figs.32 and 33)

(1) Remove the three screws **U** attaching the rack holder assembly and release joint **ac** from the notch **ad**. (See Figs.32 and 34)

Caution:

When reattaching the rack holder assembly, do not nip the wires extending from the sensor assembly. (See Fig.32)

(2) Remove the two screws **V** attaching the sensor assembly. (See Figs.35 and 38)

(3) Move the sensor assembly in the direction of the arrow to release from the joint section **ae**. (See Figs.35 and 38)

(4) Remove the sensor spring attached to the bottom of the sensor assembly from the boss **af** on the sensor slider. (See Figs.35 and 36)

(5) Remove the screw **W** and **X** attaching the sensor board and SV. resister respectively. (See Fig.37)

Reference:

Remove the solder from the solder point **ai** on the sensor board as required. (See Fig.37)

Caution:

- When reattaching the SV. resister, attach the sensor slider to the sensor bracket and fit the lever on the bottom of the SV. resister into slot aj of the sensor slider. (See Figs.36 and 37)
- When reattaching the rack holder assembly, turn the gear 1 clockwise to move the slide gear and slide lever inside the body in the direction of the arrow. (See Figs.32 and 38)
- Let the wire extending from the sensor assembly through notch **ag** to the bottom of the DVD changer mechanism assembly. (See Figs.35 and 38)
- Fit pin **ak** of the slide lever into hole **ah** of the sensor slider on the bottom of the sensor assembly while attaching the sensor spring to the boss **af** of the sensor slider. (See Figs.36 and 38)
- Joint section **ae** of the sensor assembly to the notch **am** of the DVD changer mechanism assembly. (See Figs.35 and 38)

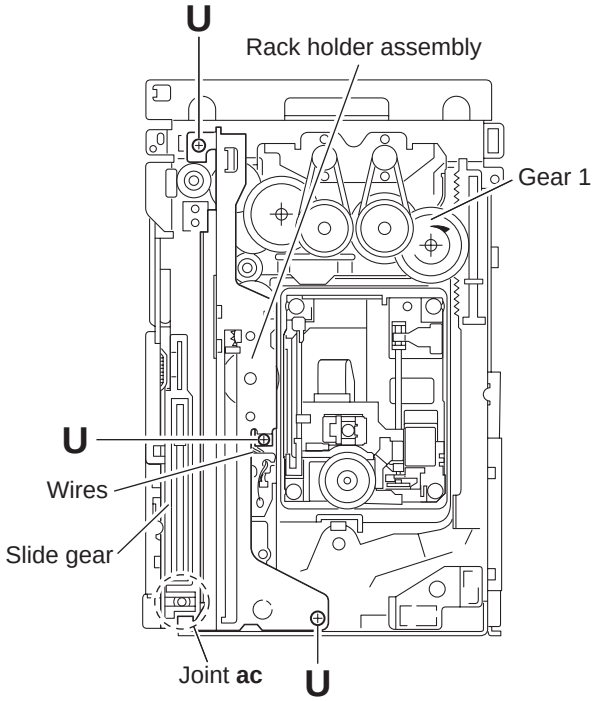

Fig.32

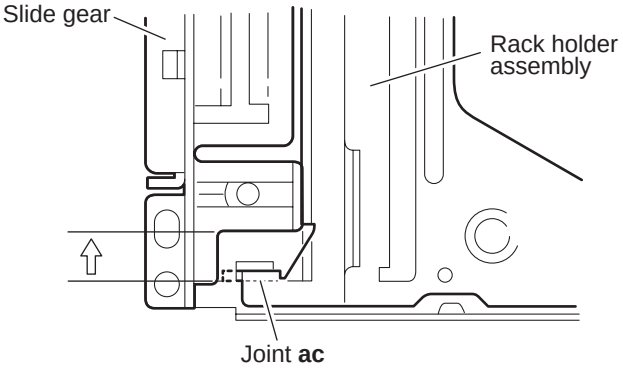

Fig.33

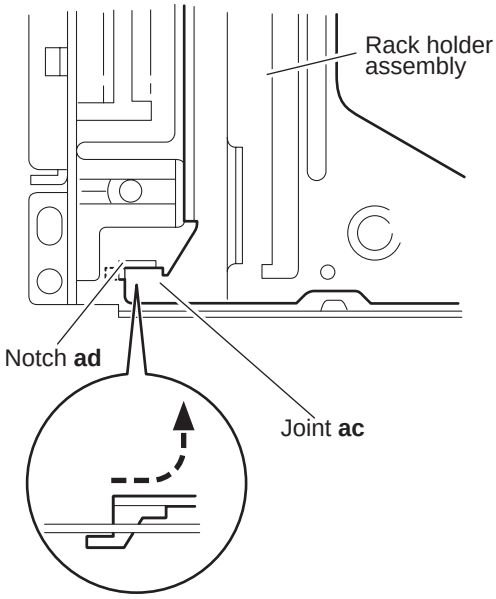

Fig.34

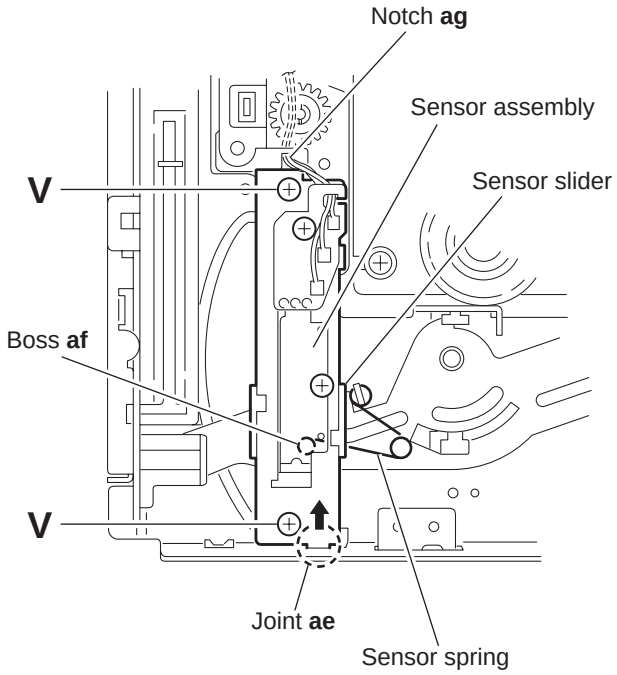

Fig.35

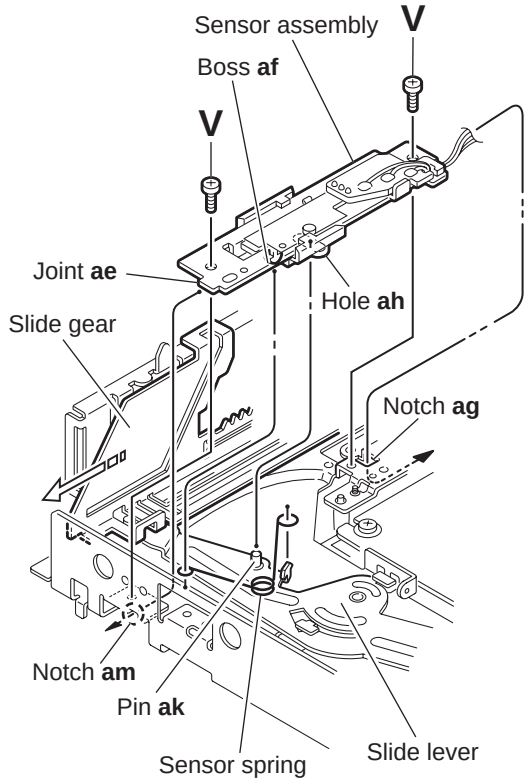

Fig.38

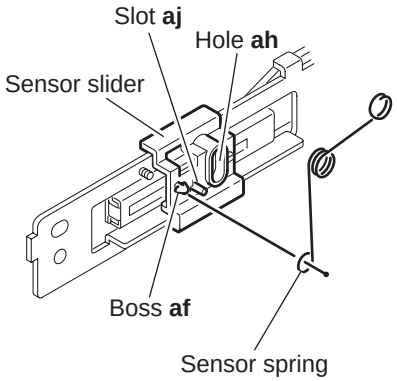

Fig.36

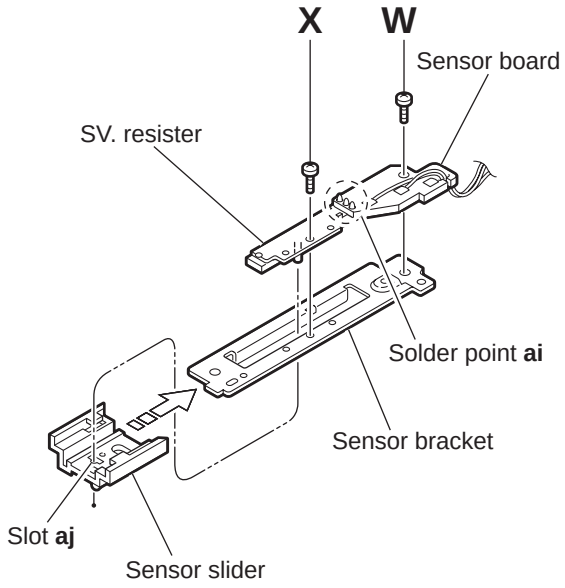

Fig.37

3.3.15 Taking out the disc in the play mode (See Fig.39 to 42)

Reference:

Refer to "Removing the tray assemblies".

(1) From the topside of the DVD changer mechanism assembly, remove the top cover.
(2) Unlock the tray assemblies and draw out the tray assemblies toward the front.
(3) From the top side of the DVD changer mechanism assembly, turn the gear 1 clockwise to move the lifter assembly upward. (See Fig.39)
(4) Turn the gear 2 clockwise to move the sub tray remaining inside the lifter assembly toward the front, then pull out. (See Fig.39)
(5) Take out the disc on the sub tray. (See Fig.40)
(6) After clearing away the disc, insert the sub tray into the main tray. (See Fig.41)

Caution:

When reattaching the sub tray, move the tray stopper on the bottom of the main tray in the direction of the arrow to lock the sub tray certainly. (See Figs.41 and 42)

(7) Push the tray assembly toward the body and reattach.

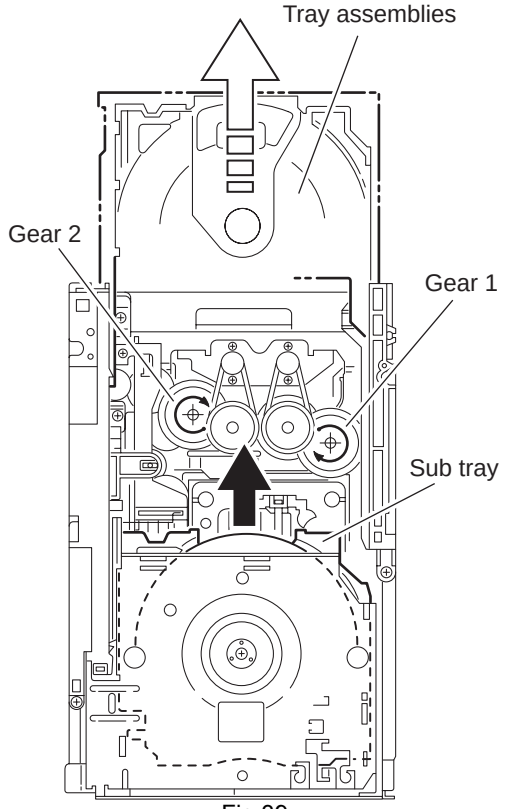

Fig.39

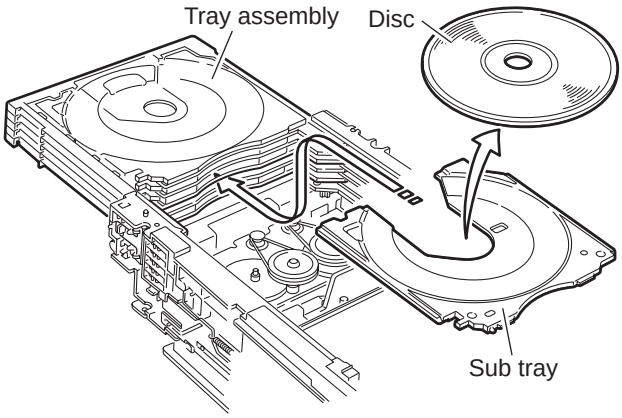

Fig.40

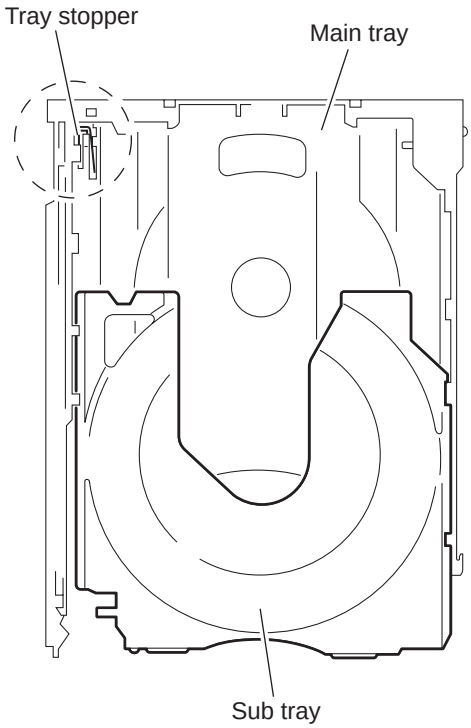

Fig.41

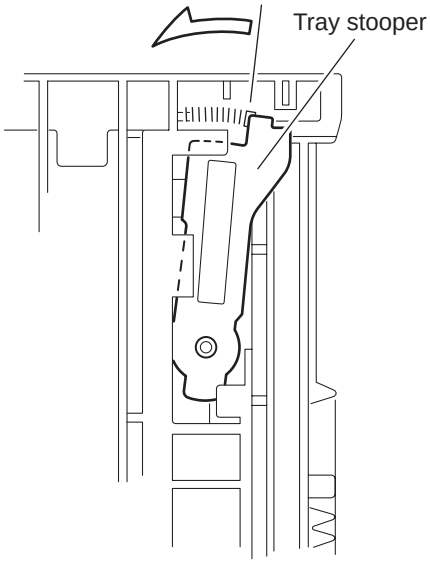

Fig.42

3.4 Speaker section

3.4.1 Removing the amplifier assembly (See Figs.1 to 3)

(1) From the back side of the speaker main body, remove two screws **A** attaching the amplifier assembly. (See Fig.1)

(2) From the bottom side of the speaker main body, remove the eight screws **B** attaching amplifier assembly. (See Fig.2)

(3) From the left side of the speaker main body, move the amplifier assembly backward and disconnect the wire from the connector CN274 on the mother board. (See Fig.3)

Reference:

After connecting the wire to the connector CN274 on the mother board, bundle the wire by the wire clamp. (See Fig.3)

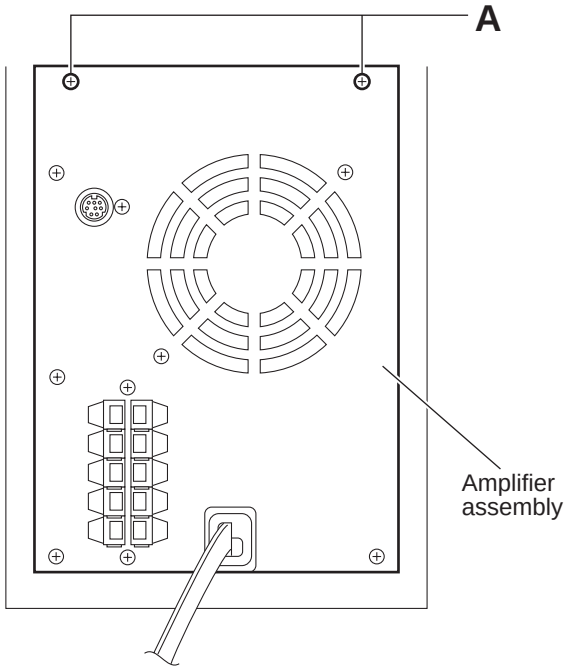

Fig.1

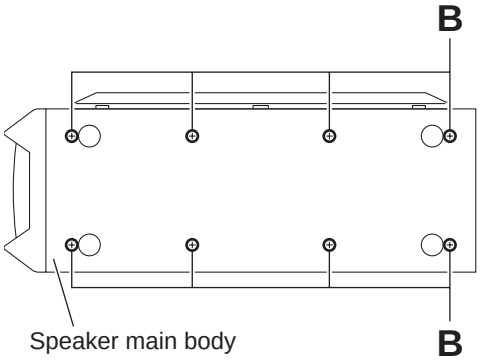

Fig.2

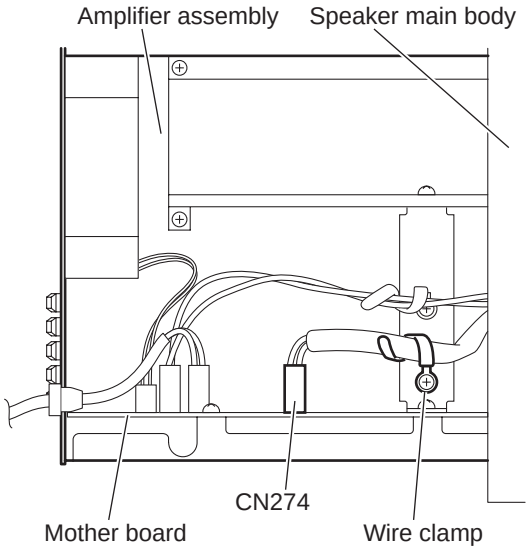

Fig.3

3.4.2 Removing the rear panel (See Figs.4 and 5)

- Prior to performing the following procedures, remove the amplifier assembly.
  (1) From the back side of the amplifier assembly, remove the four screws **C**, two screws **D** and screw **E** attaching the rear panel. (See Fig.4)
  (2) From the top side of the amplifier assembly, take out the rear panel with fan motor, and disconnect the wire from the connector CN371 on the mother board. (See Fig.5)

3.4.3 Removing the fan motor (See Figs.4 and 5)

- Prior to performing the following procedures, remove the amplifier assembly.
  (1) From the back side of the rear panel, remove the two screws **F** attaching the fan motor. (See Fig.4)
  (2) From the top side of the amplifier assembly, take out the fan motor and disconnect the wire from the connector CN371 on the mother board. (See Fig.5)

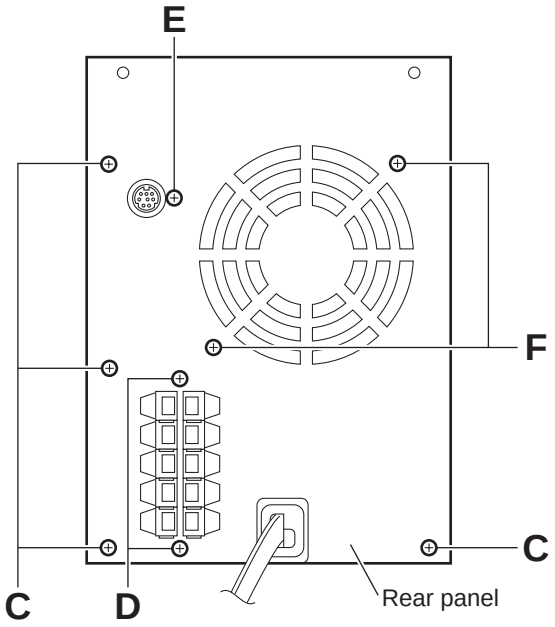

Fig.4

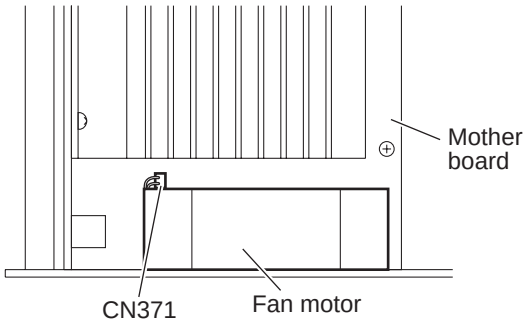

Fig.5

3.4.4 Removing the heat sink BKT (See Figs.6 and 7)

- Prior to performing the following procedures, remove the amplifier assembly and rear panel.
  (1) From the left side of the amplifier assembly, remove the wires from the wire clamp on the heat sink BKT. (See Fig.6)
  (2) From the left side of the amplifier assembly, remove the four screws **G** attaching the heat sink BKT. (See Fig.7)
  (3) Take out the two heat sink BKT.

Reference:

After attaching the heat sink BKT, bundle the wire by the wire clamp. (See Fig.6)

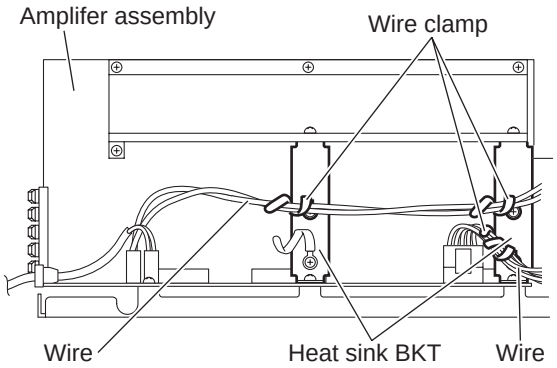

Fig.6

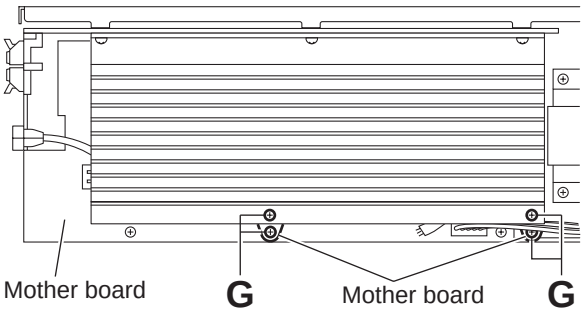

Fig.7

3.4.5 Removing the mother board (See Figs.8 and 9)

- Prior to performing the following procedures, remove the amplifier assembly, rear panel and heat sink BKT.
  (1) From the top side of the amplifier assembly, remove the two screws **H** attaching the mother board. (See Fig.8)
  (2) From the left side of the amplifier assembly, disconnect the wires from the connectors CN102 and CN151 on the mother board. (See Fig.9)
  (3) Disconnect the power cord from the connector CN101 on the mother board, and take out the power cord. (See Fig.9)
  (4) Disconnect the mother board from the connector CN271, CN272 and CN273 on the amp. board , and take out the mother board assembly from the amplifier assembly. (See Fig.9)

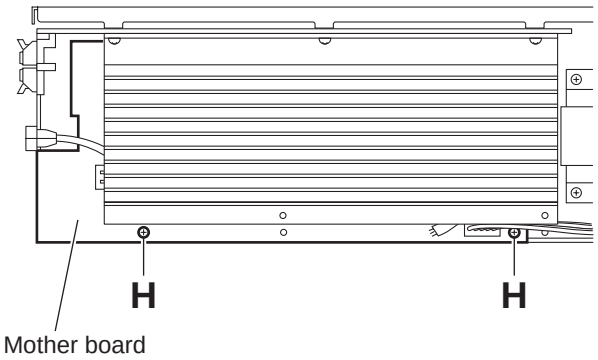

Fig.8

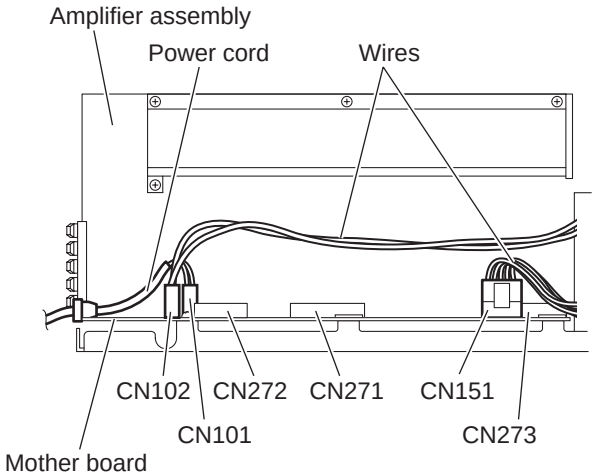

Fig.9

3.4.6 Removing the amp. board (See Fig.10)

- Prior to performing the following procedures, remove the amplifier assembly, rear panel, heat sink BKT and mother board.
  (1) From the left side of the amplifier assembly, remove the nine screws **J** attaching the amp. board.
  (2) Take out the amp. board with the heat sink.

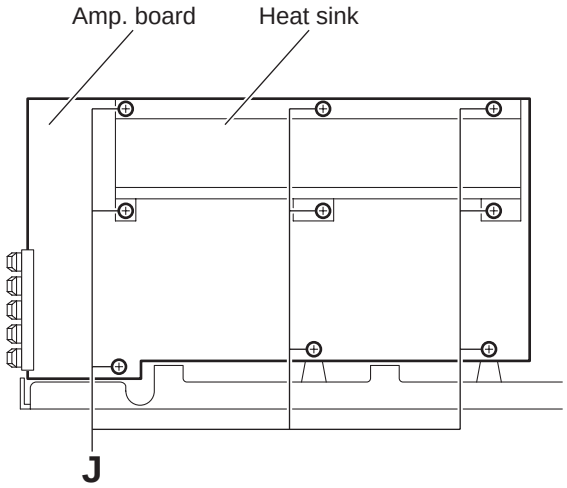

Fig.10

3.4.7 Removing the heat sink (See Figs.11 and 12)

- Prior to performing the following procedures, remove the amplifier assembly, rear panel, heat sink BKT, mother board and amp. board.
  (1) From left side of the amp. board, remove the screw **K** attaching the hold spring to the heat sink. (See Fig.11)
  (2) Remove the four screws **L** attaching the power IC to the heat sink. (See Fig.11)
  (3) From the reverse side of the amp. board, remove the three screws **M** attaching the heat sink to the amp. board. (See Fig.12)
  (4) Take out the heat sink.

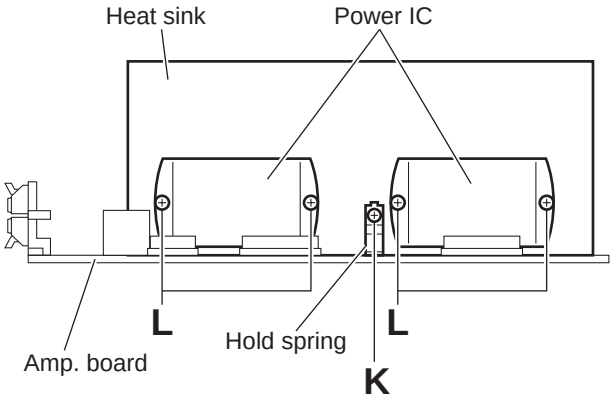

Fig.11

3.4.8 Removing the power IC (See Fig. 12)

- Prior to performing the following procedures, remove the amplifier assembly, rear pan el, heat sink BKT, mother bo ard, amp. board and heat sink.
  (1) From the reverse side of the amp. board, remove the solders from the solder points **a** on the amp. board.
  (2) Take out the power IC.

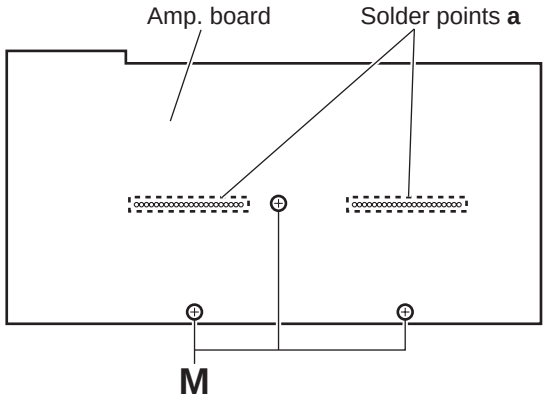

Fig.12

3.4.9 Removing the LED board (See Fig.13)

- Prior to performing the following procedures, remove the amplifier assembly and rear panel.
  (1) From the front side of the amplifier assembly, cut off the tie bands.
  (2) Remove the screw **N** attaching the LED board.
  (3) From the reverse side of the LED board, remove the solder from the solder point **b** on the LED board.

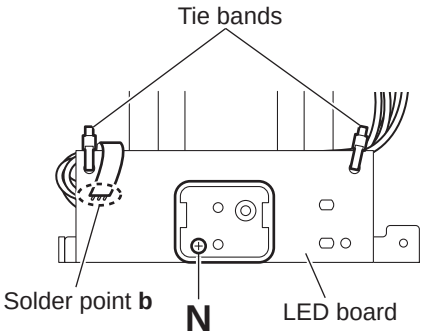

Fig.13

3.4.10 Removing the power transformer (See Figs.14 and 15)

- Prior to performing the following procedures, remove the amplifier assembly and rear panel.
  (1) From the top side of the amplifier assembly, disconnect the wires from the connectors CN102 and CN151 on the mother board. (See fig.14)
  (2) Remove the four screws **P** attaching the power transformer, and take out the power transformer from the amplifier assembly. (See fig.15)

Reference:

- When attaching the power transformer, attach the screws **P** with the barrier. (See fig.15)
- After connect the wires from the connectors CN102 and CN151, bundle the wire by the wire clamp. (See Fig.14)

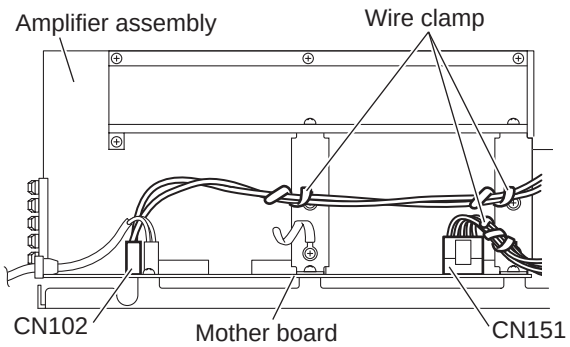

Fig.14

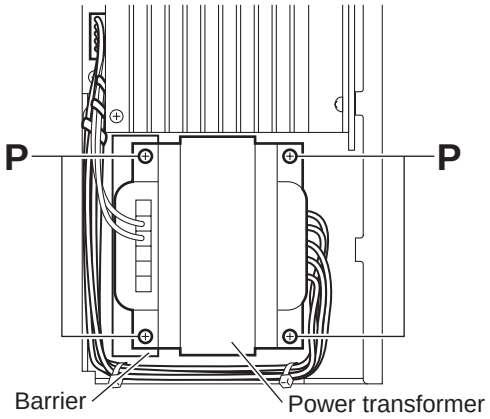

Fig.15

3.4.11 Removing the speaker net (See Figs.16 and 17)

(1) From side of the speaker main body, insert the tip of the flat-bladed screwdriver or similar tool into the space between the speaker main body and speaker net, and lift the speaker net little by little to remove. (See Fig.16)

Note:
To prevent damaging the speaker net and speaker main body, insert cushioning plates etc. to the section **c** and below the tip of the flat-bladed screwdriver or similar tool.

(2) From right side of the speaker main body, release the eight joint **d**, and take out the speaker net from the speaker main body. (See Fig.17)

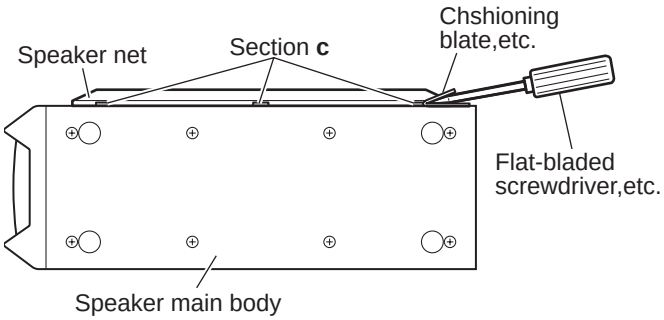

Fig.16

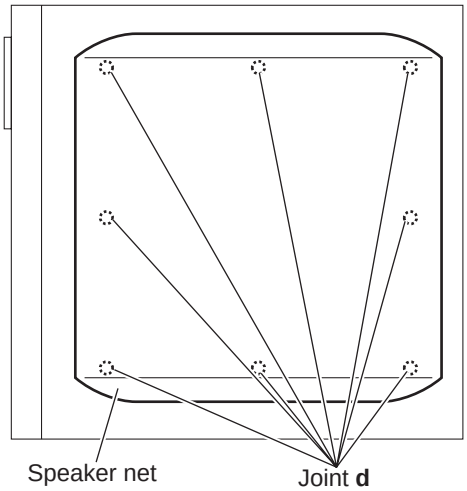

Fig.17

3.4.12 Removing the speaker (See Figs.18 and 19)

- Prior to performing the following procedures, remove the speaker net.
  (1) From right side of the speaker main body, remove the four screws **R** attaching the speaker. (See Fig.18)
  (2) Take out the speaker from the speaker main body. (See Fig.19)
  (3) Disconnect the wires from the terminal of the speaker. (See Fig.19)

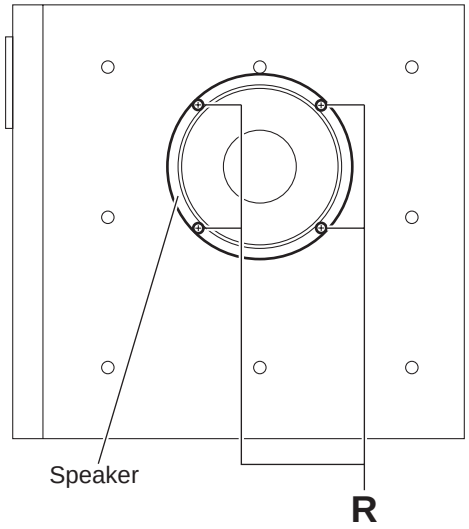

Fig.18

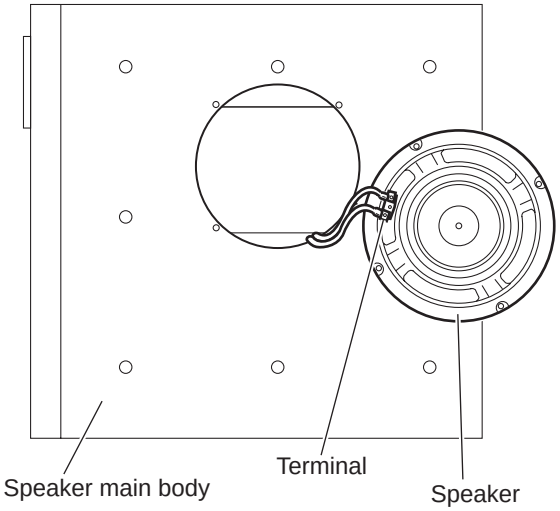

Fig.19

SECTION 4
ADJUSTMENT

4.1 Test mode setting method

(1) Unplug the power plug.
(2) Insert power plug into outlet while pressing both "PLAY" key and "STANDBY/ON" key of the main body.
"Area code" is indicated at the upper left of display,
(3) To release test mode, press "STANDBY/ON" key of the main body.

NOTE:
Each pressing of "MENU" key of the remote controller in test mode changes the mode as follows.

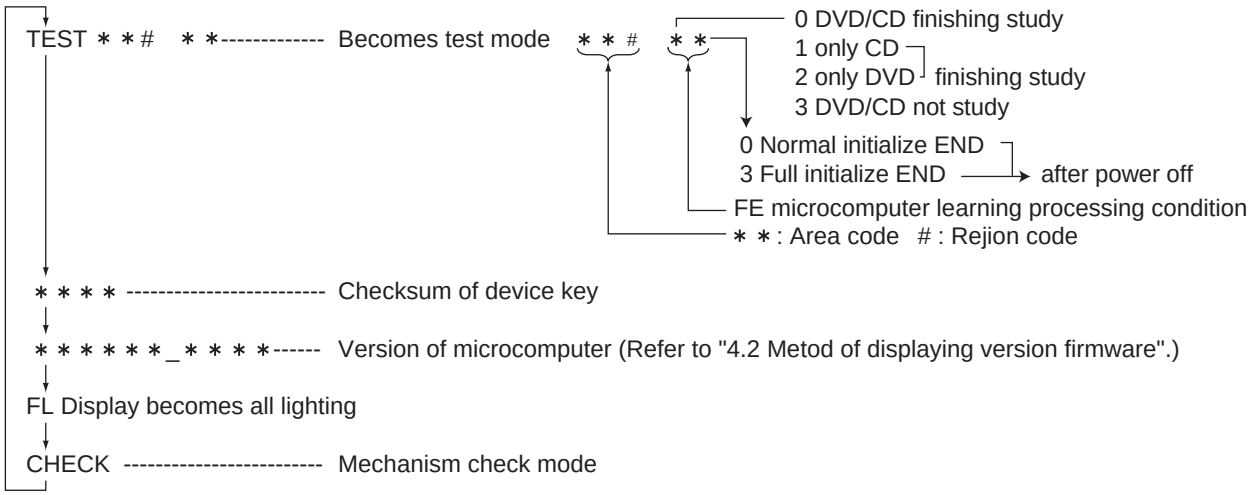

4.2 Method of displaying version of firmware

(1) Set the main body at test mode.
(2) Press "MENU" key of the remote controller twice. Then, version number and alphabetical letter of the system controller and the back end are displayed in the FL display as follows.

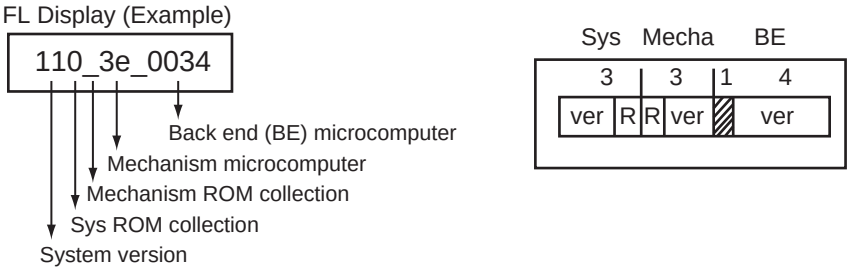

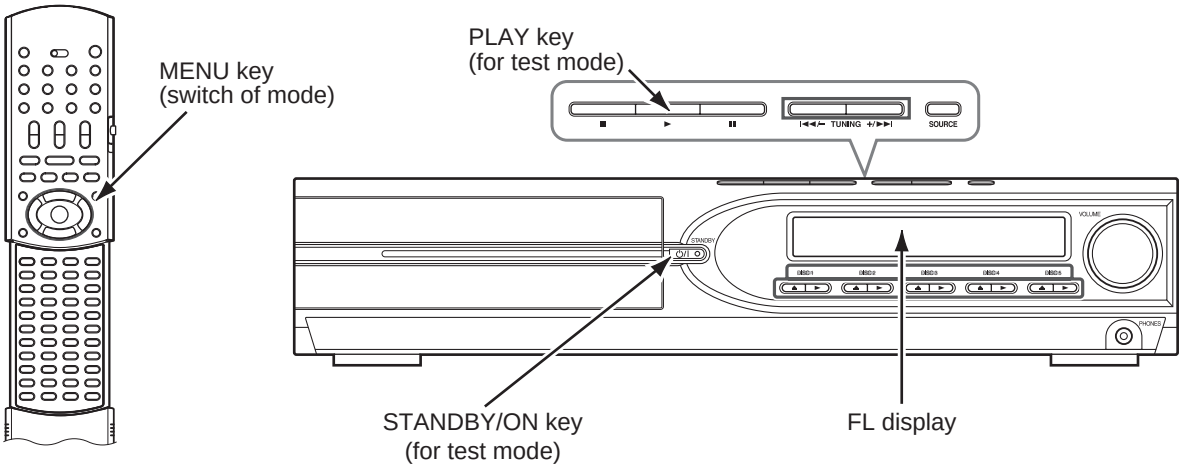

4.3 Normal initialization method

Please initialize according to the following procedures in the following case:

- Just after you upgrade the firmware.
- After you confirm the symptoms that a customer points out. First Initialize, and then confirm whether the symptoms are improved or not.
- After servicing, before returning the main body to a customer. (Initialized main body should be returned to a customer.)
  (1) Set the main body at test mode.
  (2) Press "PAUSE" key of the main body.
  (3) When initialization is completed, "00" and "RDS" is displayed in the FL display.
  (4) After this, power switch to off and wait untill "See You" to off.

4.4 Full-initialization method

Please perform all-initialization according to the following procedures in the following case:

- Just after you exchange the pick-up.
- Just after you exchange the spindle motor.
- Just after you exchange the traverse mechanism base.

NOTE:
Please perform all-initialization when you exchange the parts above and also when you remove the parts above.

- Just after the flap adjustment of the pick-up guide shaft.
  (1) Set the main body at test mode.
  (2) Press and hold "F.SKIP" key of the main body for more than 1.5 seconds.
  (3) When all-initialization is completed, "33" and "RDS" is displayed in the FL display.
  (4) After this, power switch to off and wait untill "See You" to off.

NOTE:
After all-initialization, be sure to perform Device Key Writing.

SECTION 5
TROUBLESHOOTING

This service manual does not describe SPECIFIC SERVICE INSTRUCTIONS.

JVC
VICTOR COMPANY OF JAPAN, LIMITED
AV & MULTIMEDIA COMPANY AUDIO/VIDEO SYSTEMS CATEGORY 10-1,1chome,Ohwatari-machi,Maebashi-city,371-8543,Japan

(No.MB184)

Printed in Japan
WPC

JVC

SCHEMATIC DIAGRAMS

DVD DIGITAL THEATER SYSTEM

TH-M303,TH-M301

CD-ROM No.SML200403

TH-M303
Area suffix
J ---------- U.S.A.
C ---------- Canada

TH-M301
Area suffix
J ---------- U.S.A.

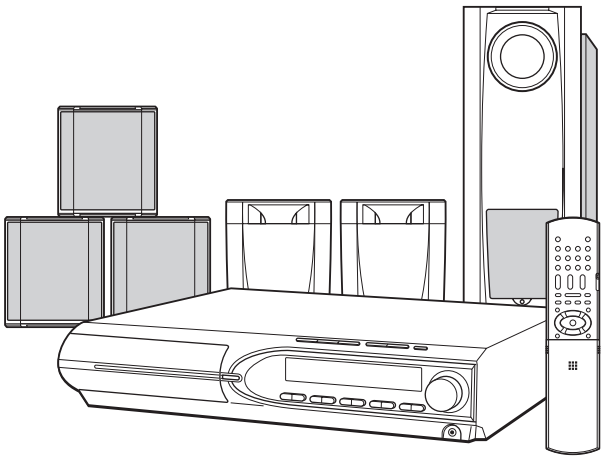

AV COMPU LINK
Digital Direct Progressive Scan

Contents

Block diagrams ---------- 2-1
Standard schematic diagrams ---------- 2-3
Printed circuit boards ---------- 2-29 to 36

COPYRIGHT © 2004 VICTOR COMPANY OF JAPAN, LTD.

No.MB184SCH
2004/3

In regard with component parts appearing on the silk-screen printed side (parts side) of the PWB diagrams, the parts that are printed over with black such as the resistor (▬), diode (▮) and ICP (●) or identified by the "⚠" mark nearby are critical for safety.
(This regulation does not correspond to J and C version.)

< MEMO >

Block diagram

<Main body section>

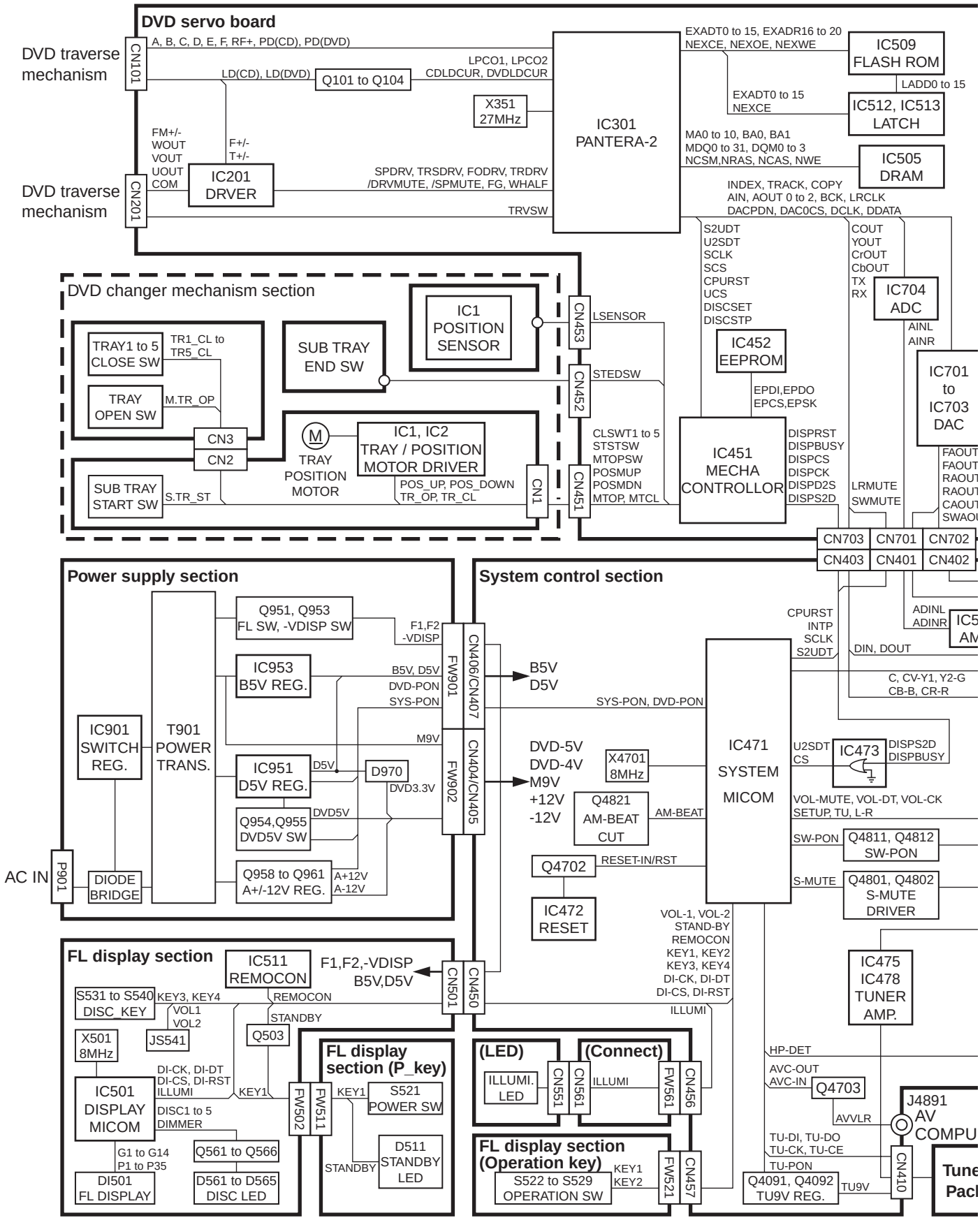

<Subwoofer section>

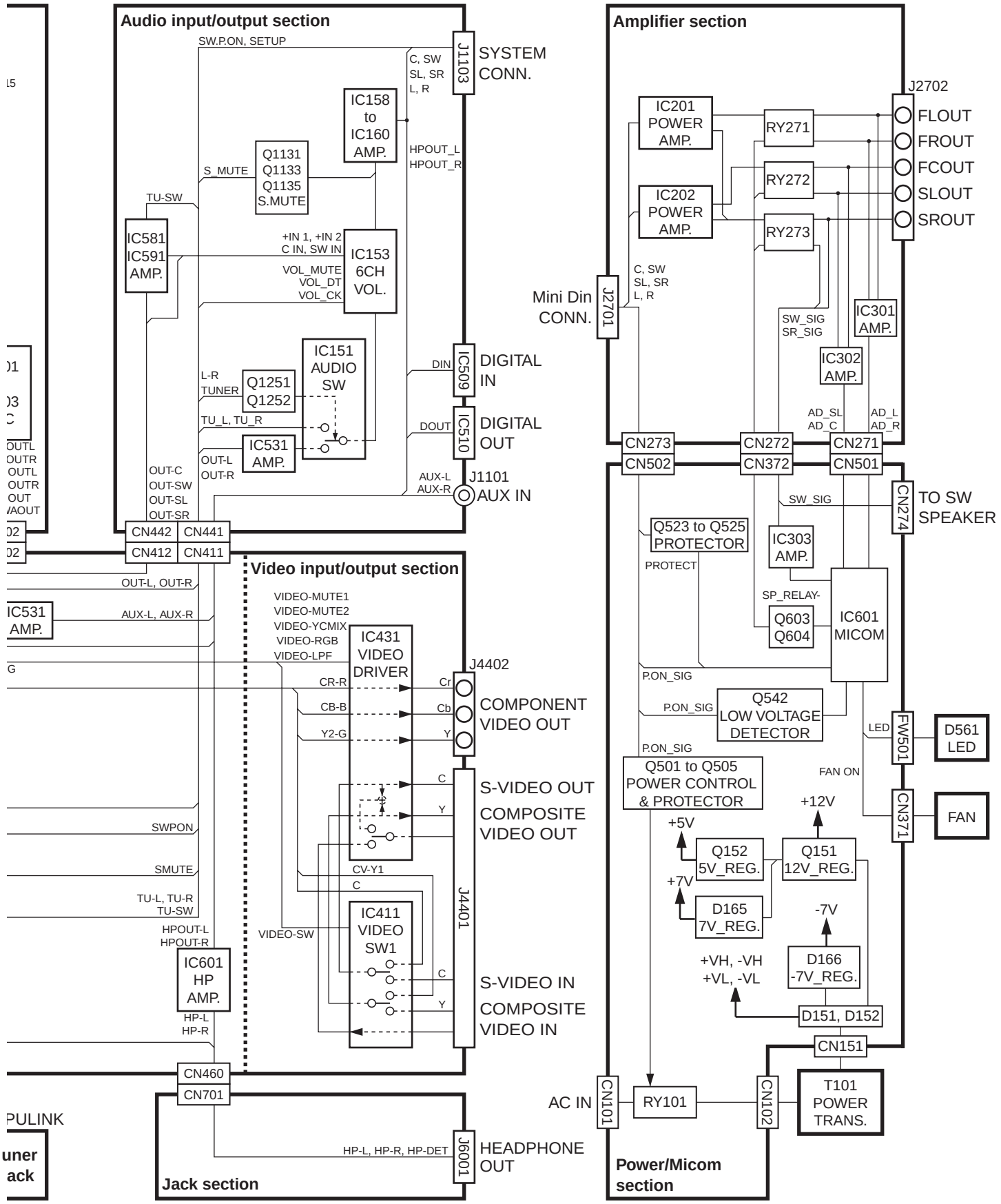

Standard schematic diagrams

<Main body section>

■ Power supply section

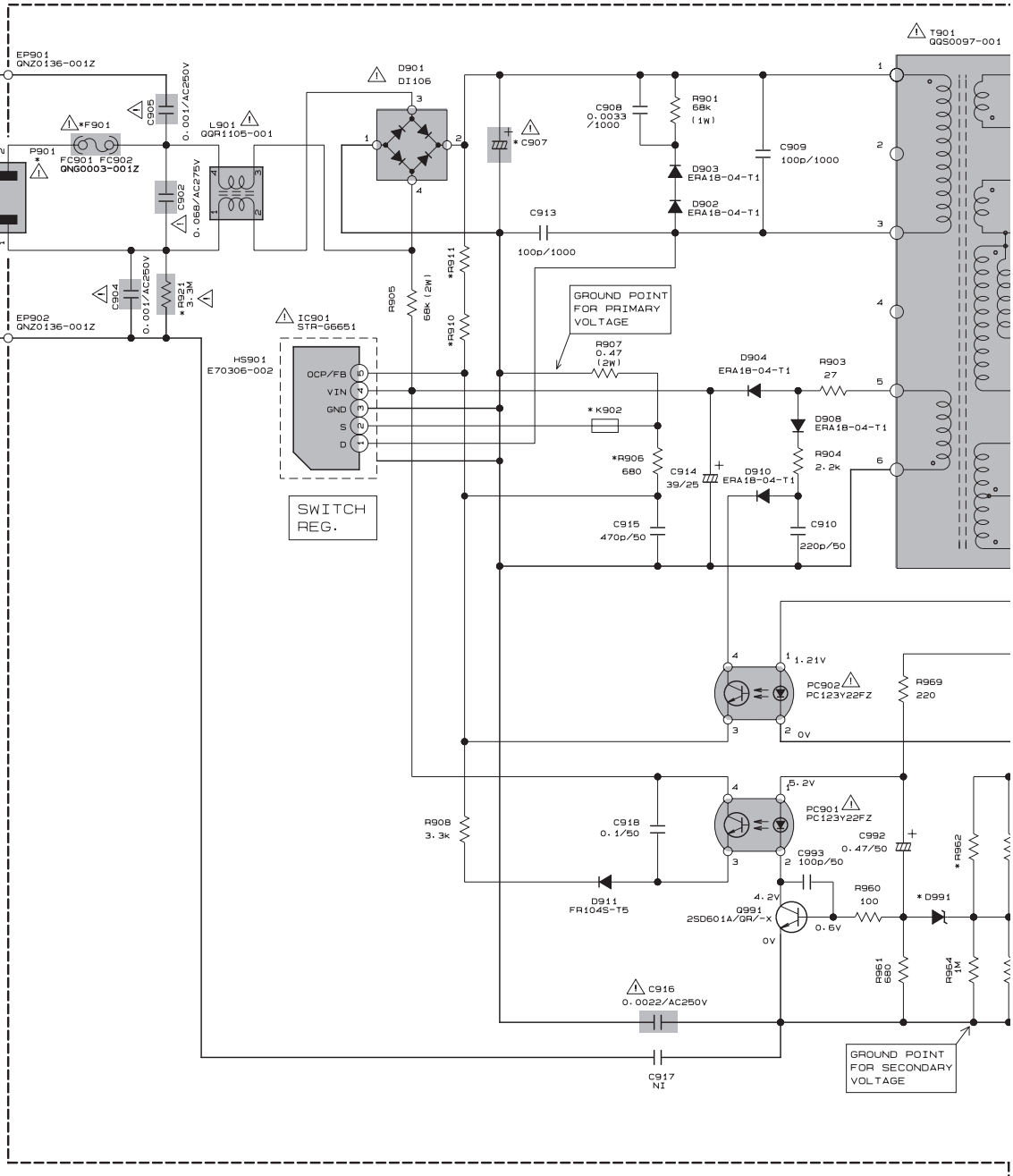

REF No. \ Ver.	ADDRESS	D	J/C	B/E/EN/EE/EV	UG/US/UW/UJ /A/UX/UT
*F901	(A-3)	QMF51U1-1R6-JB (1.6A/125V)	QMF51U1-1R6-JB (1.6A/125V)	QMF51W2-1R6-JB (T1.6AL)	QMF51W2-1R6-JB (T1.6AL)
*R962	(E-7)	1M	1M	NONE	NONE
*R963	(E-8)	100	100	180	180
*D991	(F-7)	MTZJ5.1C-T2	MTZJ5.1C-T2	MTZJ5.1B-T2	MTZJ5.1B-T2
*K902	(C-5)	QQR0779-001Z	QQR0779-001Z	0 (B3199)	0 (B3199)
*R921	(B-3)	NONE	3.3M	NONE	NONE
*P901	(B-2)	QNC0081-001	QNC0082-001	QNC0081-001	QNC0081-001
*R910 *R911	(B-5)	750k	750k	470k	470k
*CP952	(F-10)	0 (B3198)	ICP-N5-T	ICP-N5-T	ICP-N5-T

REF No. \ Ver.	ADDRESS	D	J/C	B/E/EN/EE/EV /A	US/UW/UJ/UG /UX/UT
*C907	(B-5)	QETM2DM-157 (150/200)	QETM2DM-157 (150/200)	QETM2GM-686 (68/400)	QETM2GM-107 (100/400)
*D954	(F-9)	FR104S-T5	ERA18-04-T1	FR104S-T5	FR104S-T5

VERSION CODES

J :U.S.A.
C :CANADA
E :GERMANY/FRANCE/HOLLAND
B :GREAT BRITAIN
EE:RUSSIA
EN:SWEDEN/NORWAY/FINLAND/DENMARK
EV:EAST EUROPE
A :AUSTRALIA
UW:BRAZIL/MEXICO/PERU
US:SINGAPOLE
UJ:USA MILITALY BASE
UG:TURKEY/EGYPT/SOUTHAFRICA

⚠ Parts are safety assurance parts. When replacing those parts make sure to use the specified one.

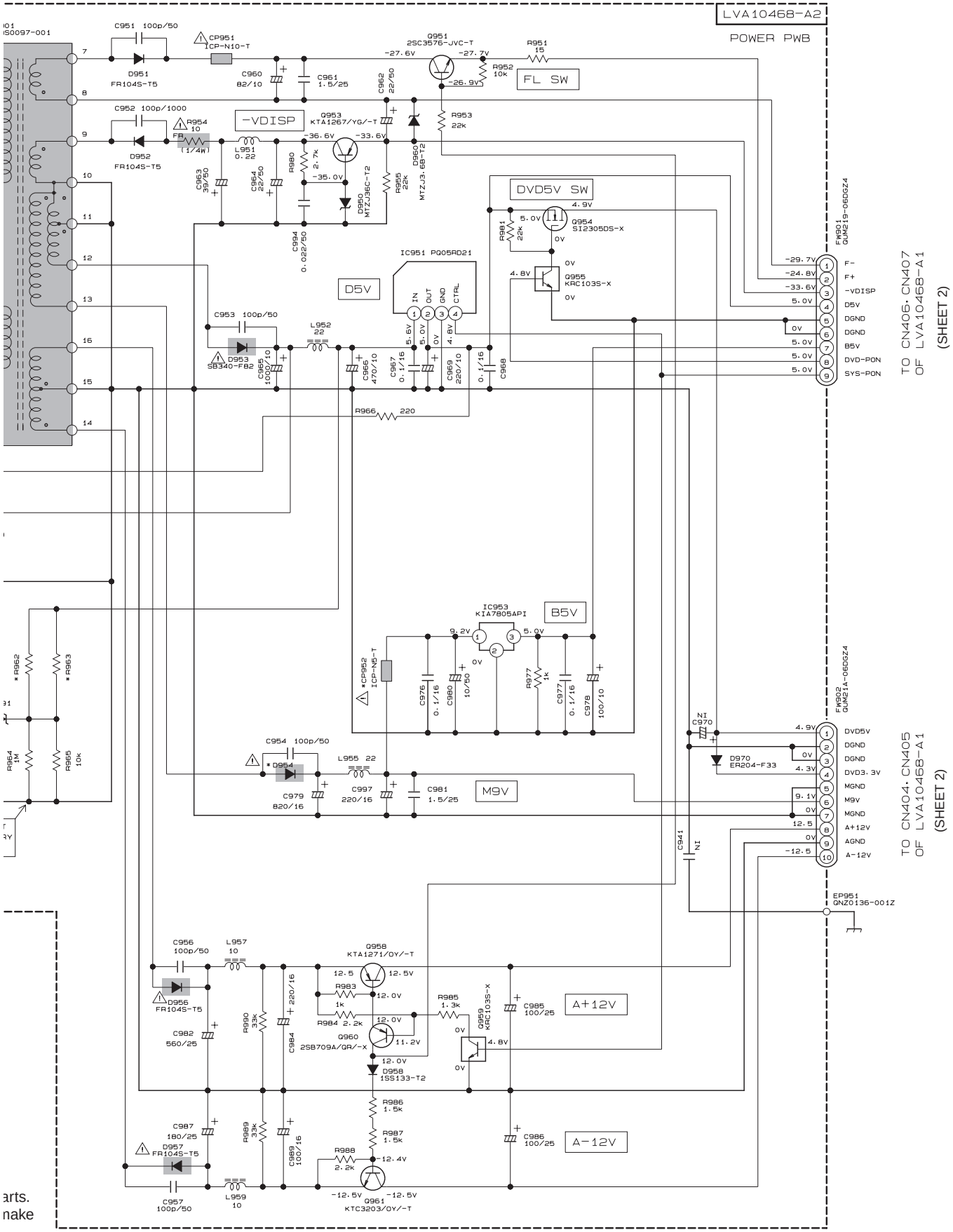
LVA10468-A2
POWER PWB
FL SW
-VDISP
DVD5V SW
D5V
B5V
M9V
A+12V
A-12V
TO CN406, CN407 OF LVA10468-A1 (SHEET 2)
TO CN404, CN405 OF LVA10468-A1 (SHEET 2)

SHEET 1

■ System control section

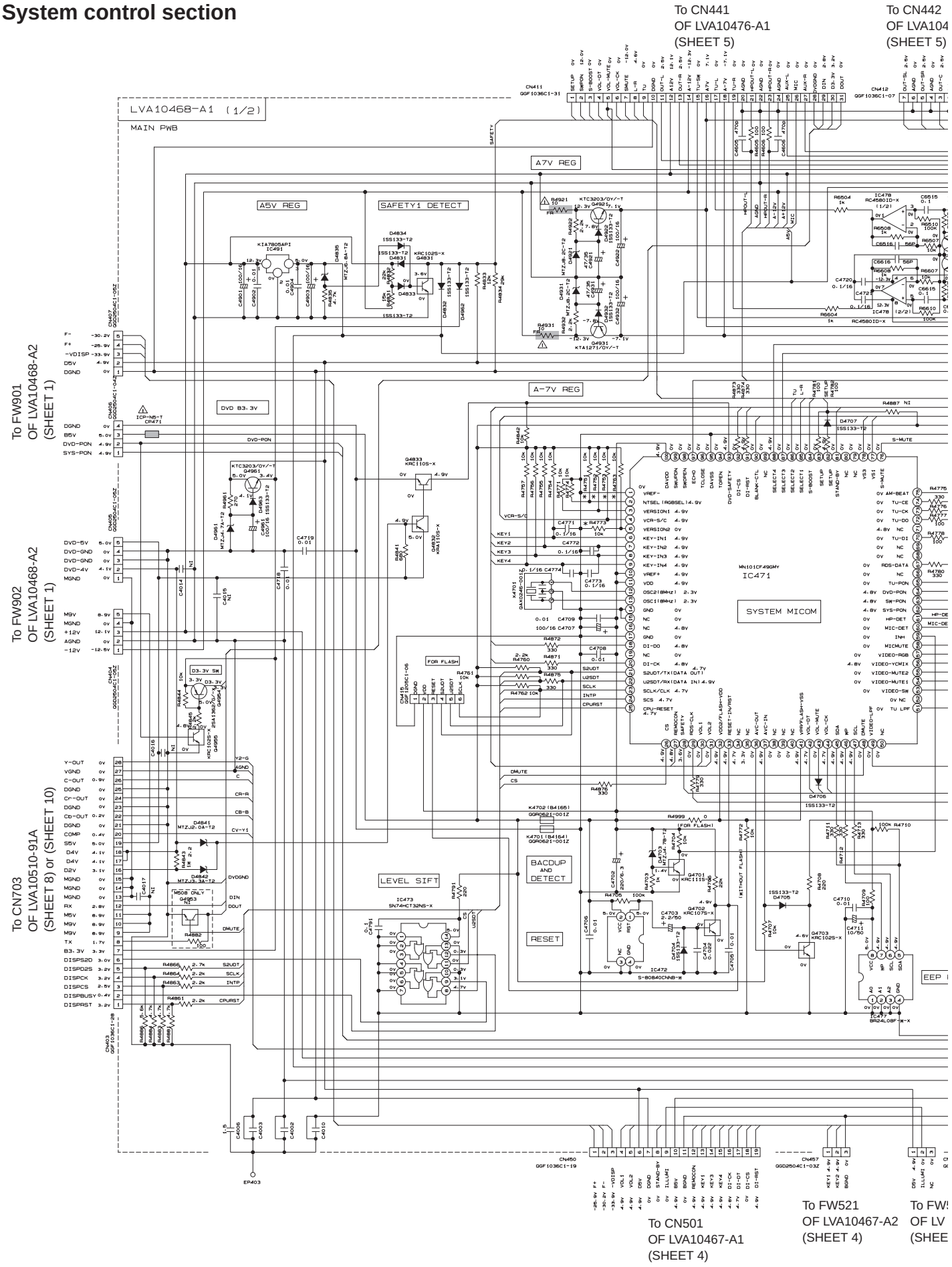

o CN442
)F LVA10476-A1
SHEET 5)

To CN702
OF LVA10510-91A
(SHEET 8) or (SHEET 10)

To CN701
OF LVA10510-91A
(SHEET 8) or (SHEET 10)

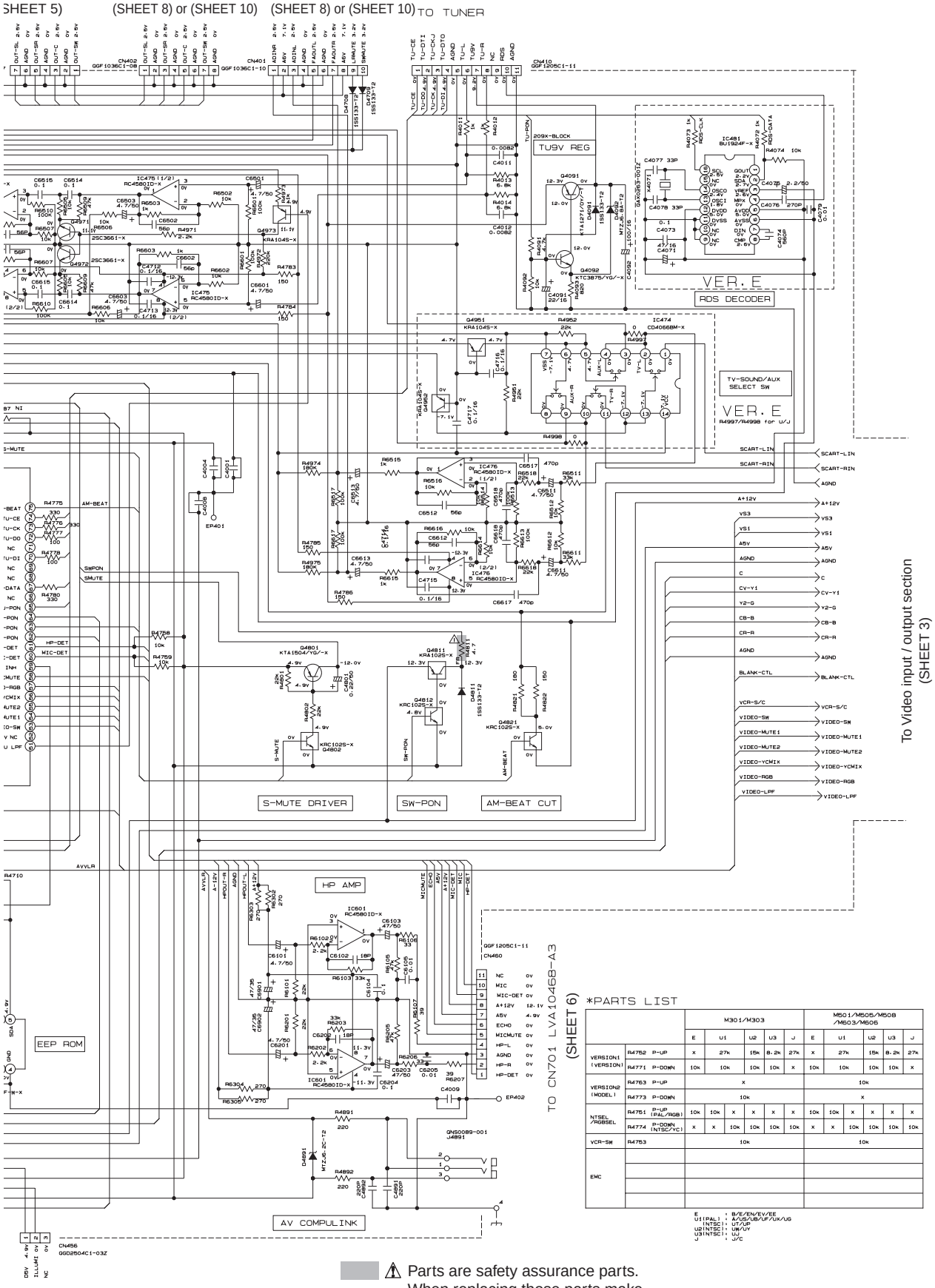

*PARTS LIST

			M301/M303					M501/M505/M508 /M603/M606				
			E	U1	U2	U3	J	E	U1	U2	U3	J
VERSION1 (VERSION1)	R4752	P-UP	x	27k	15k	8.2k	27k	x	27k	15k	8.2k	27k
	R4771	P-DOWN	10k	10k	10k	10k	x	10k	10k	10k	10k	x
VERSION2 (MODEL)	R4763	P-UP	x					10k				
	R4773	P-DOWN	10k					x				
NTSEL /RGBSEL	R4751	P-UP (PAL/RGB)	10k	10k	x	x	x	x	10k	x	x	x
	R4774	P-DOWN (NTSC/YC)	x	x	10k	10k	10k	10k	x	10k	10k	10k
VCR-SW	R4753		10k					10k				
EMC												

E : B/E/EN/EV/EE
U1(PAL) : A/US/UB/UP/UX/UG
U1(NTSC) : UT/UP
U2(NTSC) : UW/UY
U3(NTSC) : UJ
J : J/C

To FW561
2 OF LVA10467-A5
(SHEET 4)

⚠ Parts are safety assurance parts.
When replacing those parts make sure to use the specified one.

SHEET 2

■ Video input / output section

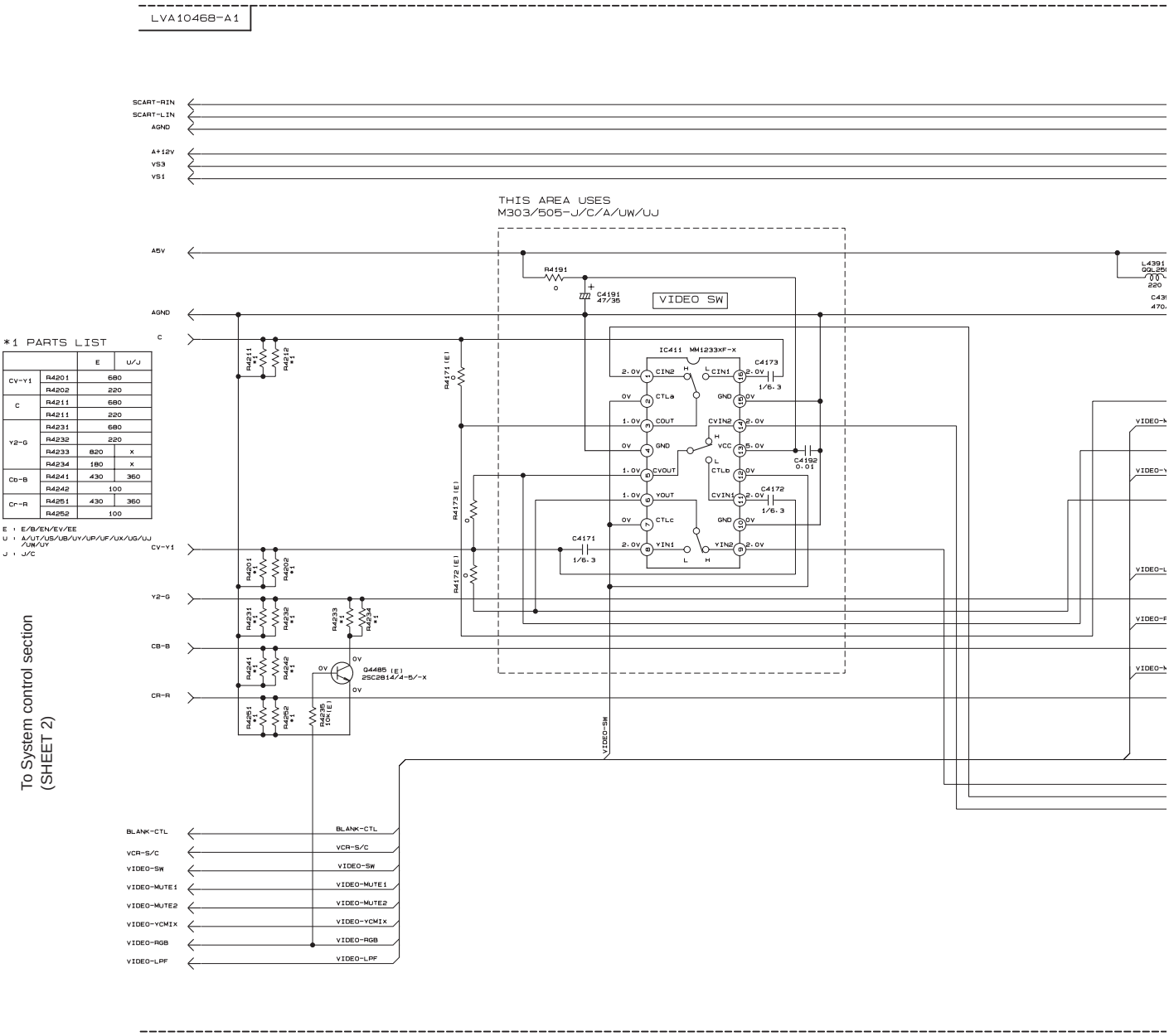

*1 PARTS LIST

		E	U/J
CV-Y1	R4201	680	
	R4202	220	
C	R4211	680	
	R4212	220	
Y2-G	R4231	680	
	R4232	220	
	R4233	820	x
	R4234	180	x
Cb-B	R4241	430	360
	R4242	100	
Cr-R	R4251	430	360
	R4252	100	

E : E/B/EN/EV/EE
U : A/UT/US/UB/UY/UP/UF/UX/UG/UJ /UW/UY
J : J/C

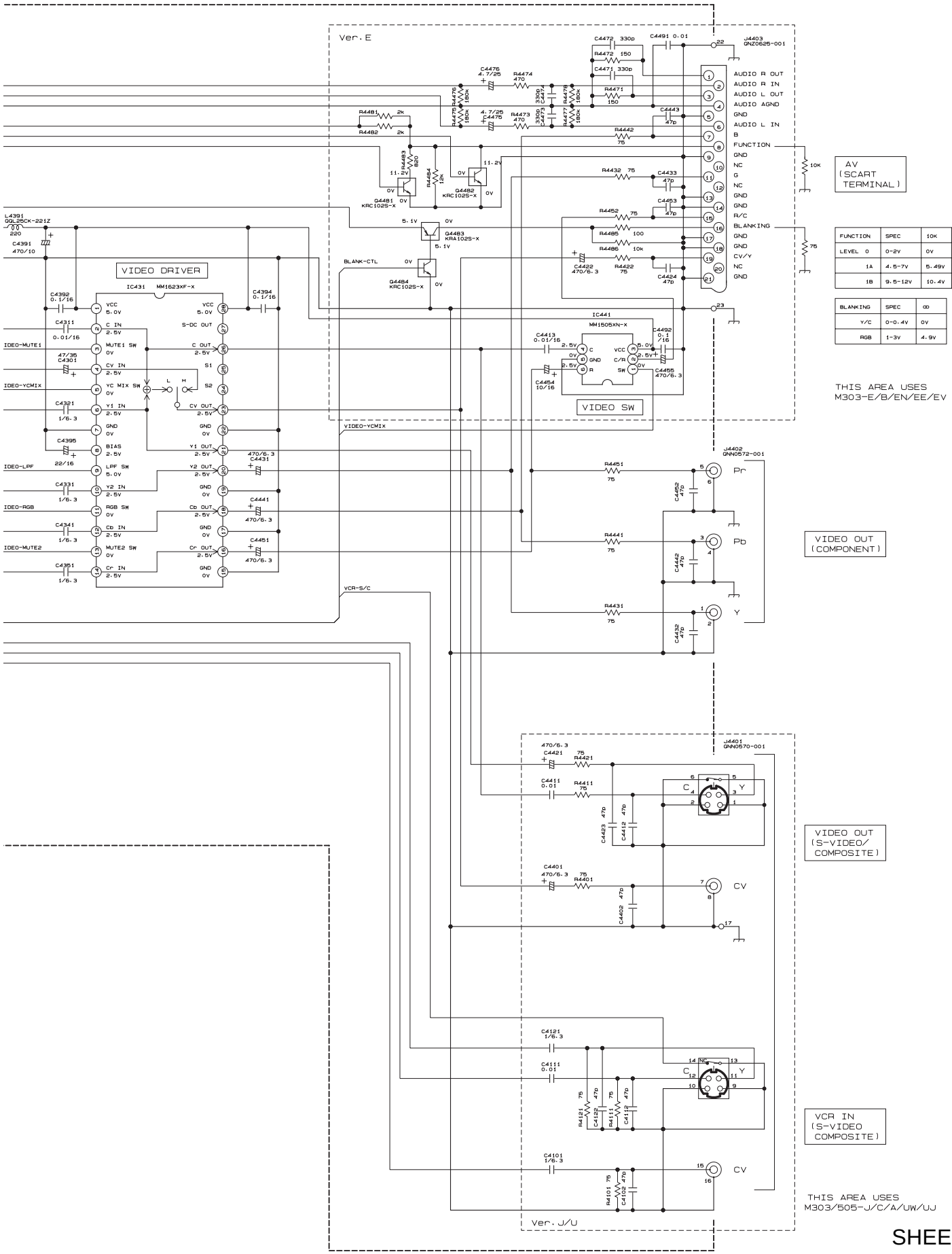

FUNCTION	SPEC	10K	∞
LEVEL 0	0-2V	0V	0V
1A	4.5-7V	5.49V	5.91V
1B	9.5-12V	10.4V	12.08V

BLANKING	SPEC	∞
Y/C	0-0.4V	0V
RGB	1-3V	4.9V

■ FL display section

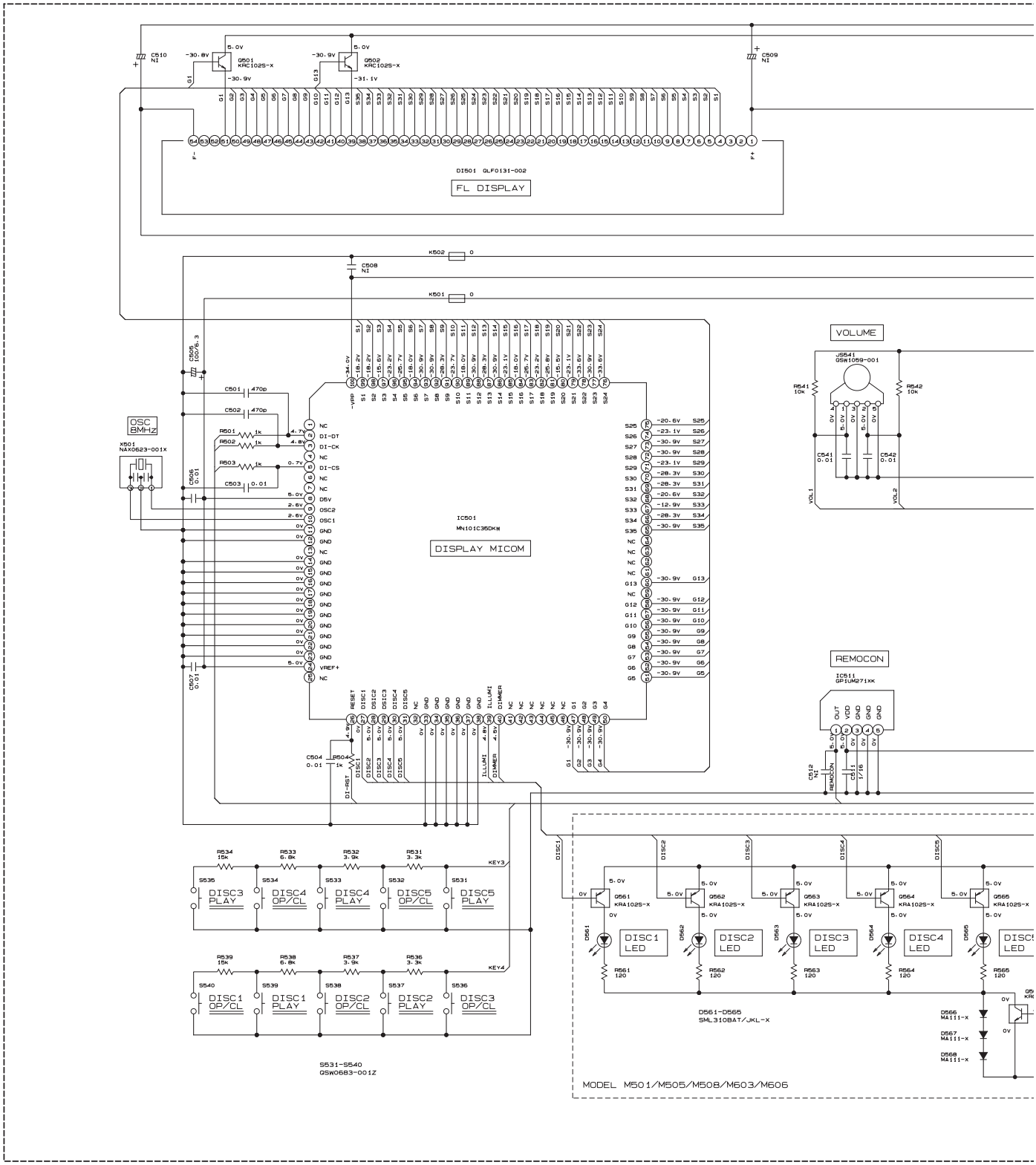

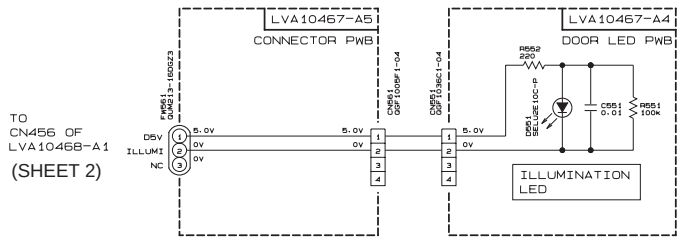

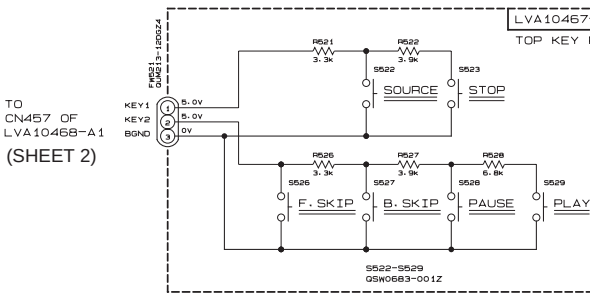

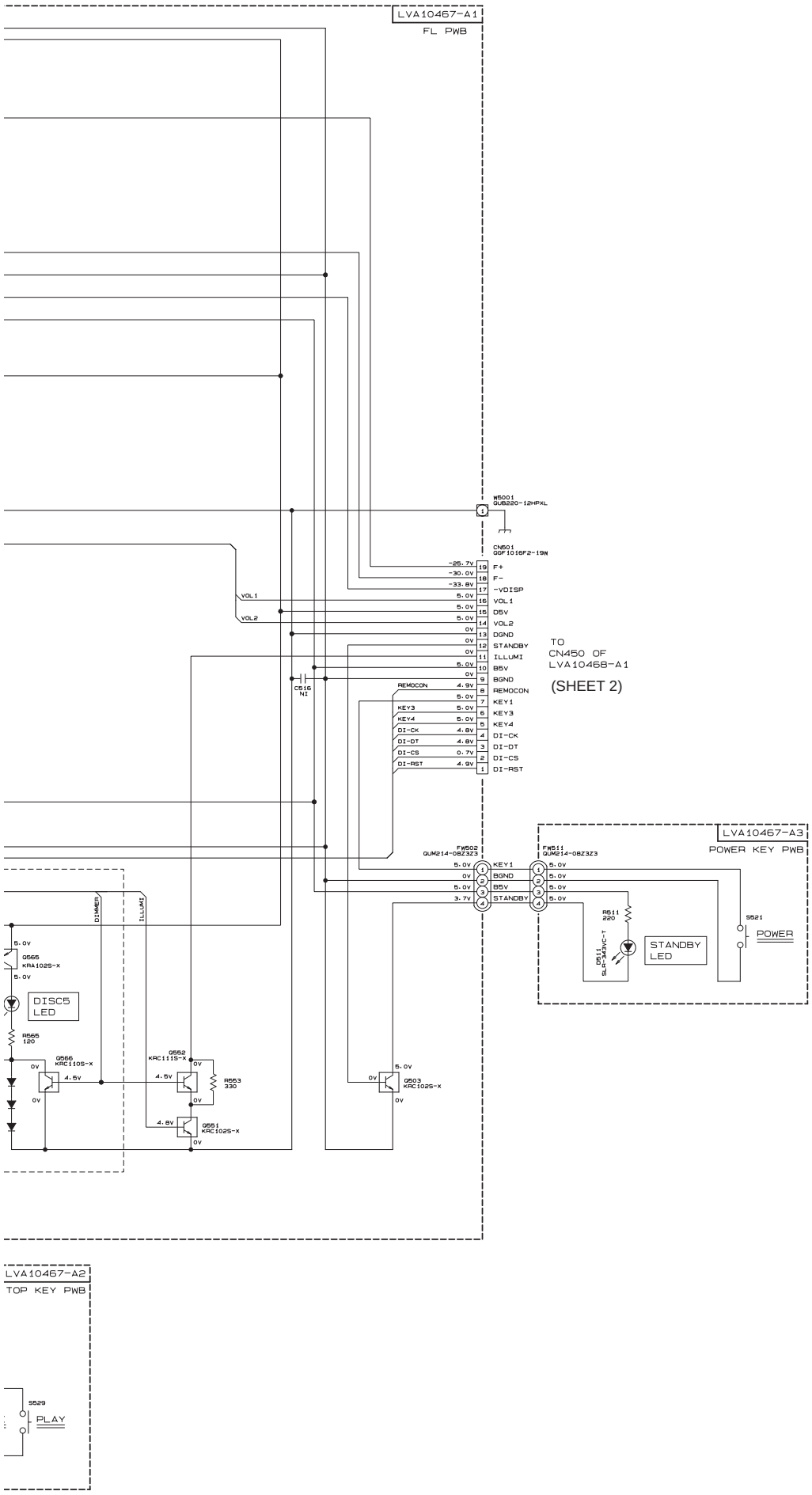
LVA10467-A1
FL PWB
W5001
QUB220-12HPXL
CN501
QGF1016F2-19W
-25.7V 19 F+
-30.0V 18 F-
-33.8V 17 -VDISP
5.0V 16 VOL1
5.0V 15 D5V
5.0V 14 VOL2
0V 13 DGND
0V 12 STANDBY
0V 11 ILLUMI
5.0V 10 B5V
0V 9 BGND
REMOCON 4.9V 8 REMOCON
5.0V 7 KEY1
KEY3 5.0V 6 KEY3
KEY4 5.0V 5 KEY4
DI-CK 4.8V 4 DI-CK
DI-DT 4.8V 3 DI-DT
DI-CS 0.7V 2 DI-CS
DI-RST 4.9V 1 DI-RST
VOL1
VOL2
C516
NI
TO
CN450 OF
LVA10468-A1
(SHEET 2)
LVA10467-A3
POWER KEY PWB
FW502
QUM214-08Z3Z3
5.0V KEY1
0V BGND
5.0V B5V
3.7V STANDBY
FW511
QUM214-08Z3Z3
5.0V
5.0V
5.0V
5.0V
R511
220
D511
SLR-343VC-T
STANDBY
LED
S521
POWER
DIMMER
ILLUMI
5.0V
Q565
KRA102S-X
5.0V
DISC5
LED
R565
120
Q566
KRC110S-X
0V
4.5V
0V
Q552
KRC111S-X
0V
4.5V
R563
330
0V
4.8V
Q551
KRC102S-X
0V
5.0V
0V
Q503
KRC102S-X
0V
LVA10467-A2
TOP KEY PWB
S529
PLAY

SHEET 4

■ Audio input / output section

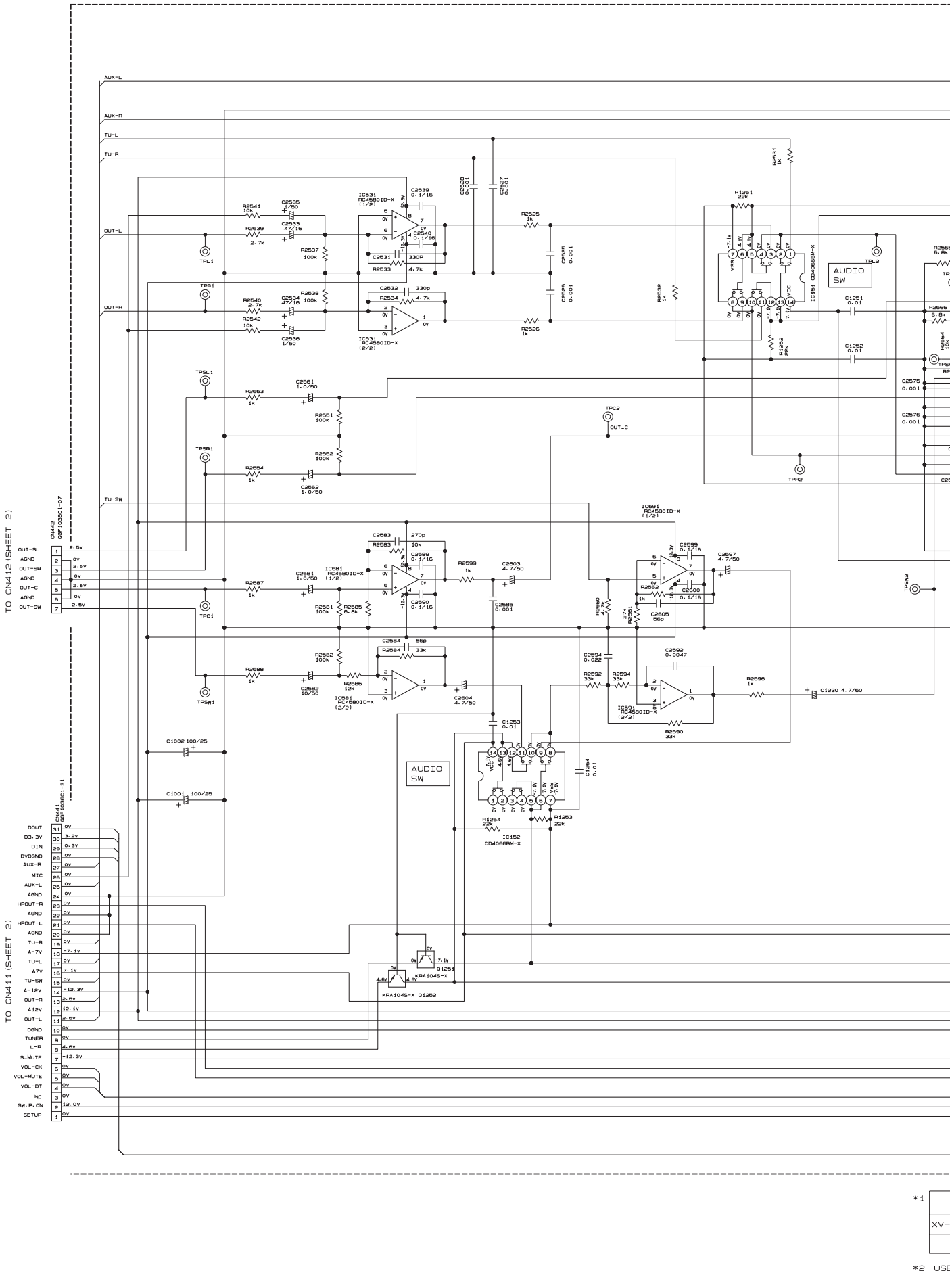

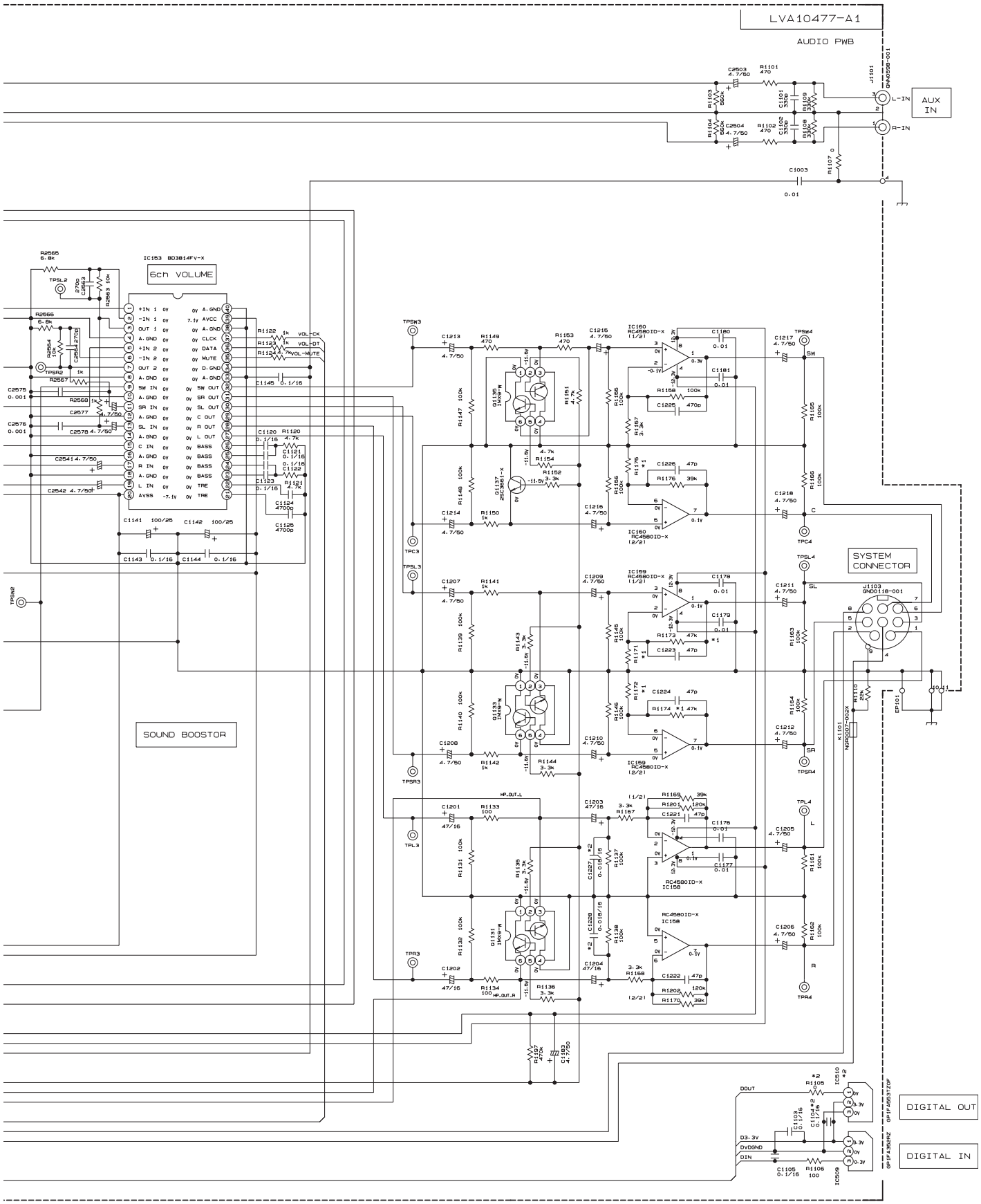

*1

	R1175	R1173 R1174
XV-THM505/M501/M508/M603/M606	4.3k	5.1k
XV-THM303/M301	4.3k	3.3k

*2 USE M508

SHEET 5

■ Jack section

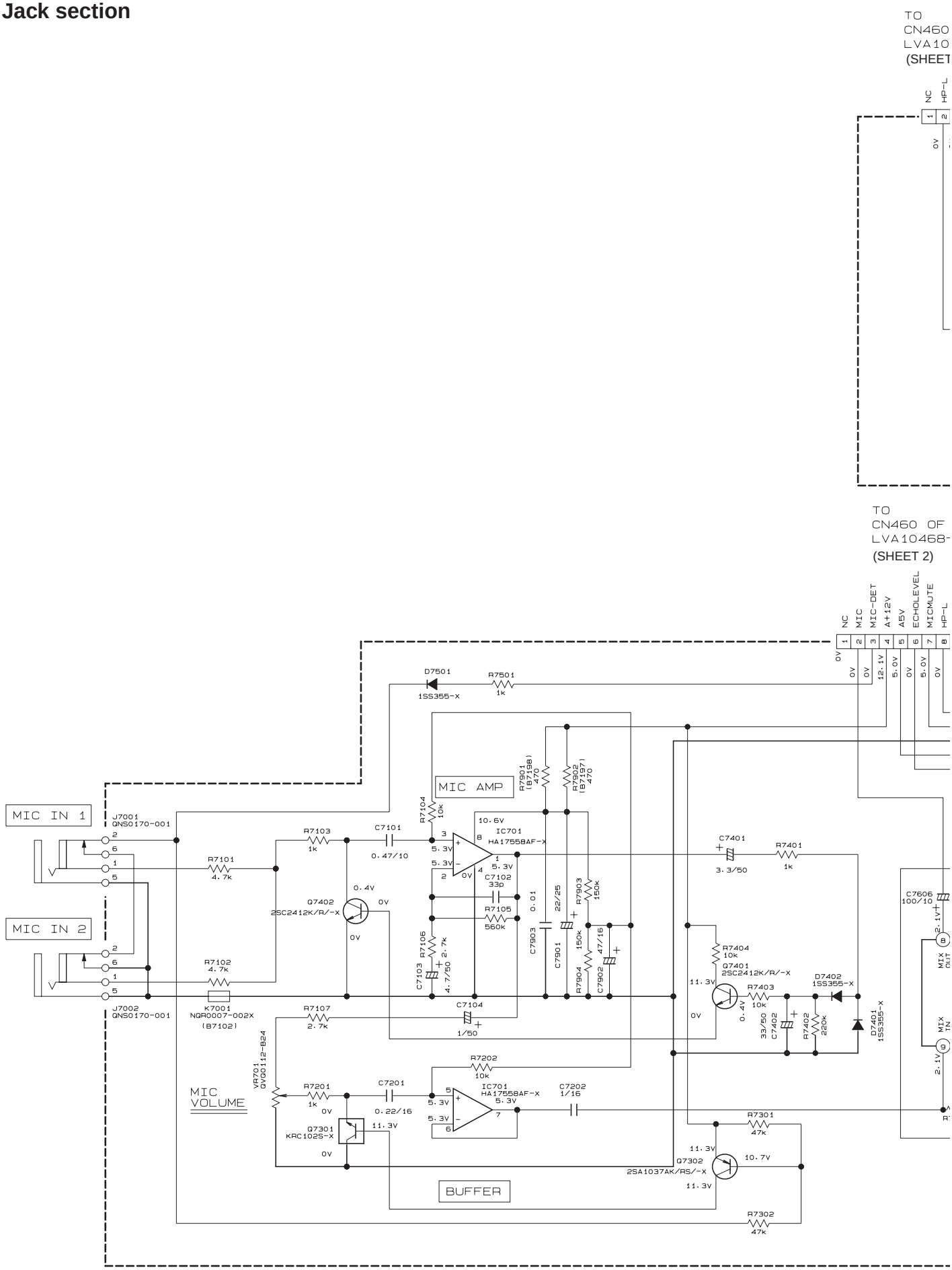

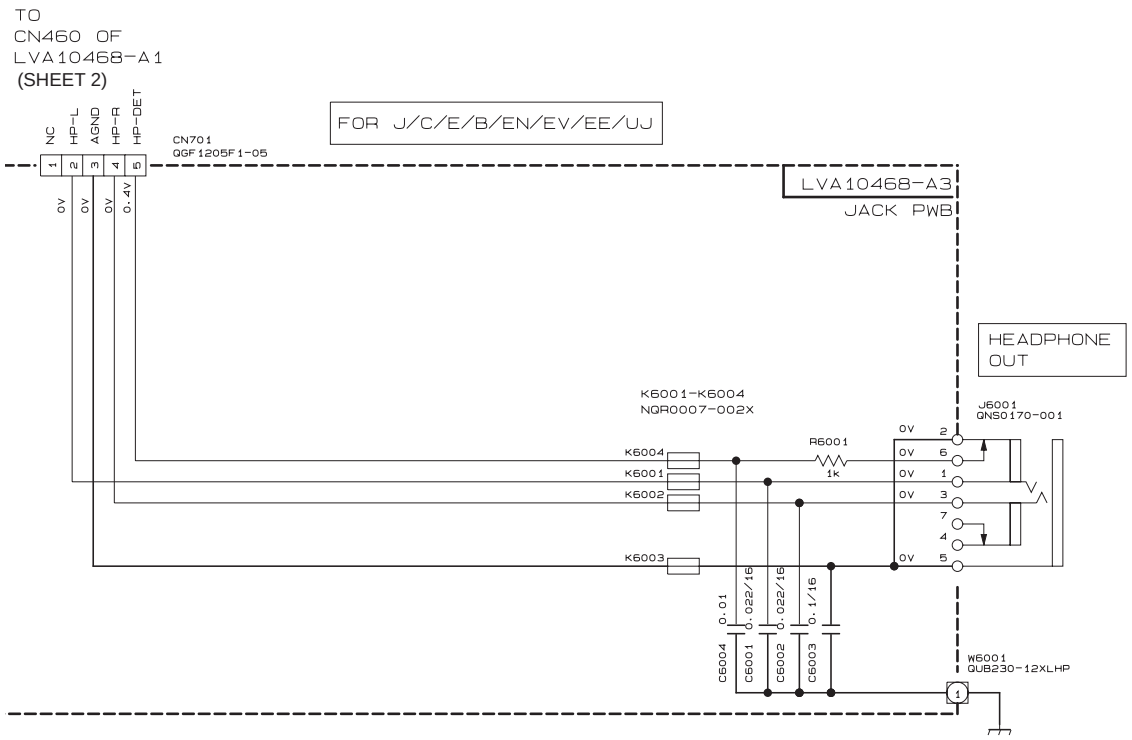
TO
CN460 OF
LVA10468-A1
(SHEET 2)
FOR J/C/E/B/EN/EV/EE/UJ
NC
HP-L
AGND
HP-R
HP-DET
CN701
QGF1205F1-05
LVA10468-A3
JACK PWB
HEADPHONE
OUT
K6001-K6004
NQR0007-002X
J6001
QNS0170-001
R6001
1k
K6004
K6001
K6002
K6003
C6004
C6001
C6002
C6003
W6001
QUB230-12XLHP

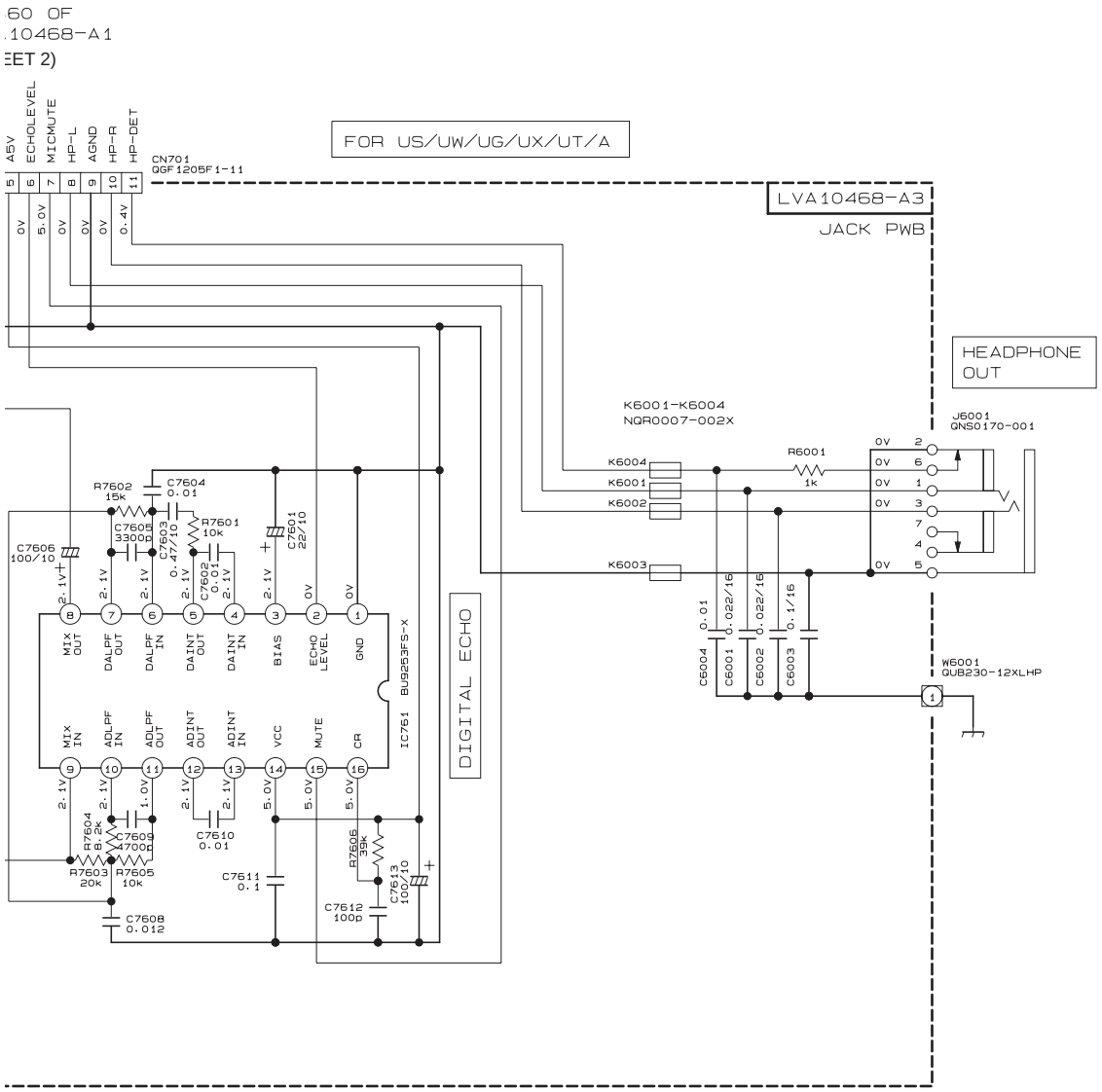
60 OF
.10468-A1
EET 2)
FOR US/UW/UG/UX/UT/A
A5V
ECHOLEVEL
MICMUTE
HP-L
AGND
HP-R
HP-DET
CN701
QGF1205F1-11
LVA10468-A3
JACK PWB
HEADPHONE
OUT
K6001-K6004
NQR0007-002X
J6001
QNS0170-001
R6001
1k
K6004
K6001
K6002
K6003
C6004
C6001
C6002
C6003
W6001
QUB230-12XLHP
R7602
15k
C7604
0.01
C7605
3300p
C7603
0.47/10
R7601
10k
C7606
100/10
C7601
22/10
C7602
0.01
MIX OUT
DALPF OUT
DALPF IN
DAINT OUT
DAINT IN
BIAS
ECHO LEVEL
GND
IC761
BU9253FS-X
DIGITAL ECHO
MIX IN
ADLPF IN
ADLPF OUT
ADINT OUT
ADINT IN
VCC
MUTE
CR
R7604
8.2k
C7609
4700p
R7603
20k
R7605
10k
C7608
0.012
C7610
0.01
C7611
0.1
R7606
39k
C7612
100p
C7613
100/10

SHEET 6

■ DVD servo section (1/2) FMU-SD9-1M

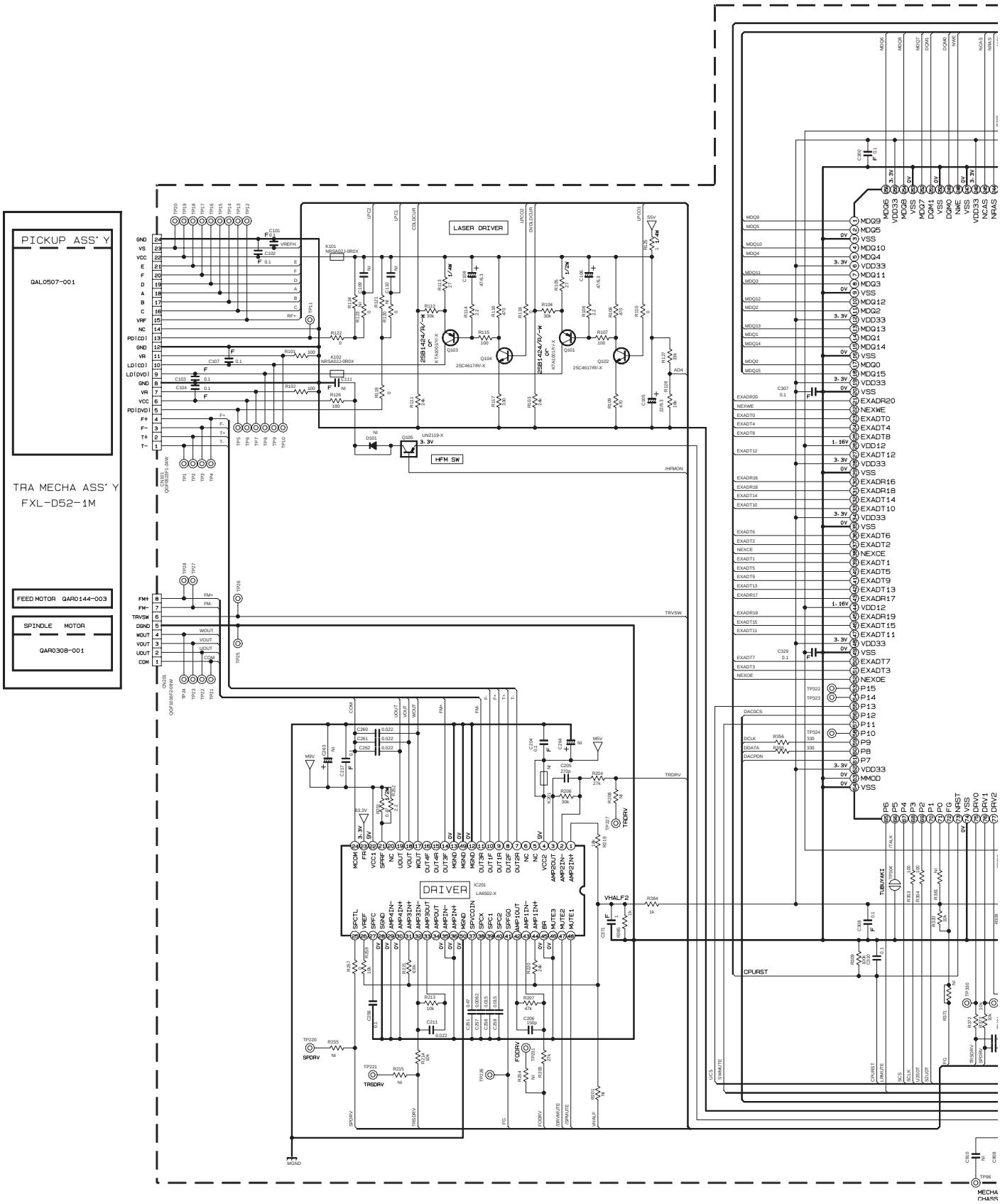

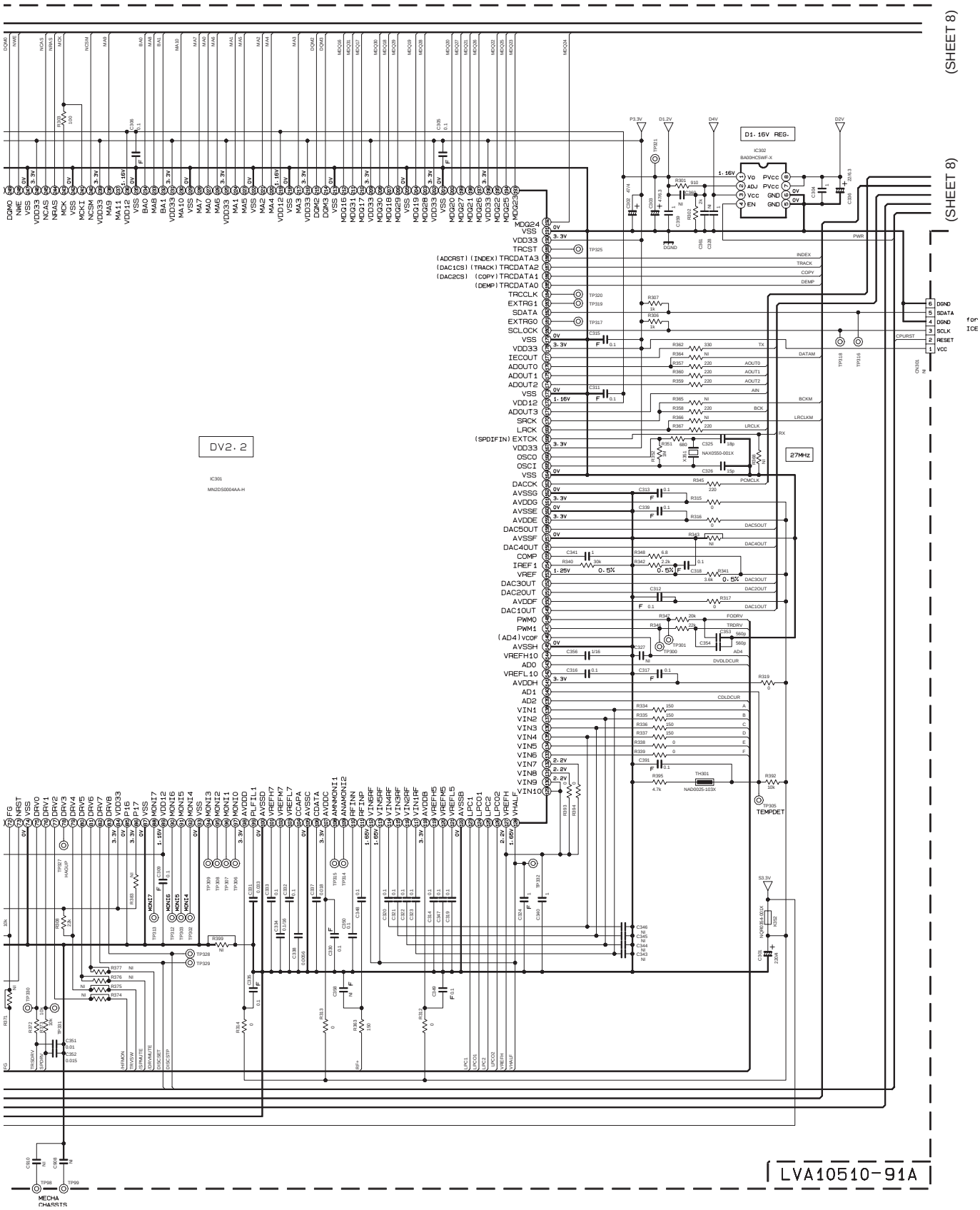
(SHEET 8)
(SHEET 8)
D1.16V REG.
IC302
BA00HC5WF-X
DV2.2
IC301
MN2DS0004AA-H
27MHz
NAX0550-001X
CN101
for ICE
DGND
SDATA
DGND
SCLK
RESET
VCC
TEMPDET
NAD0025-103X
TH301
NORM254-001X
LVA10510-91A
MECHA CHASSIS

SHEET 7

■ DVD servo section (2/2) FMU-SD9-1M

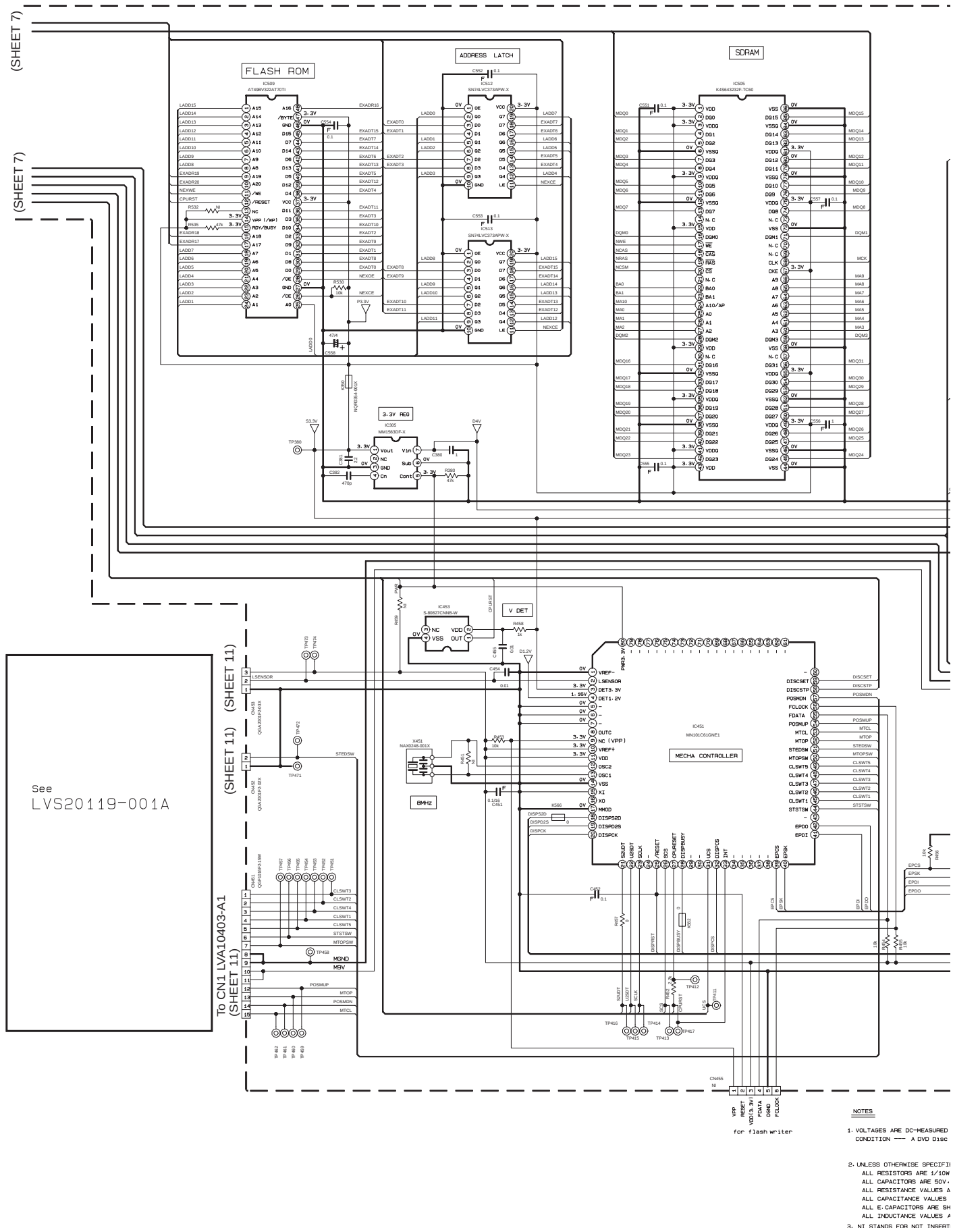

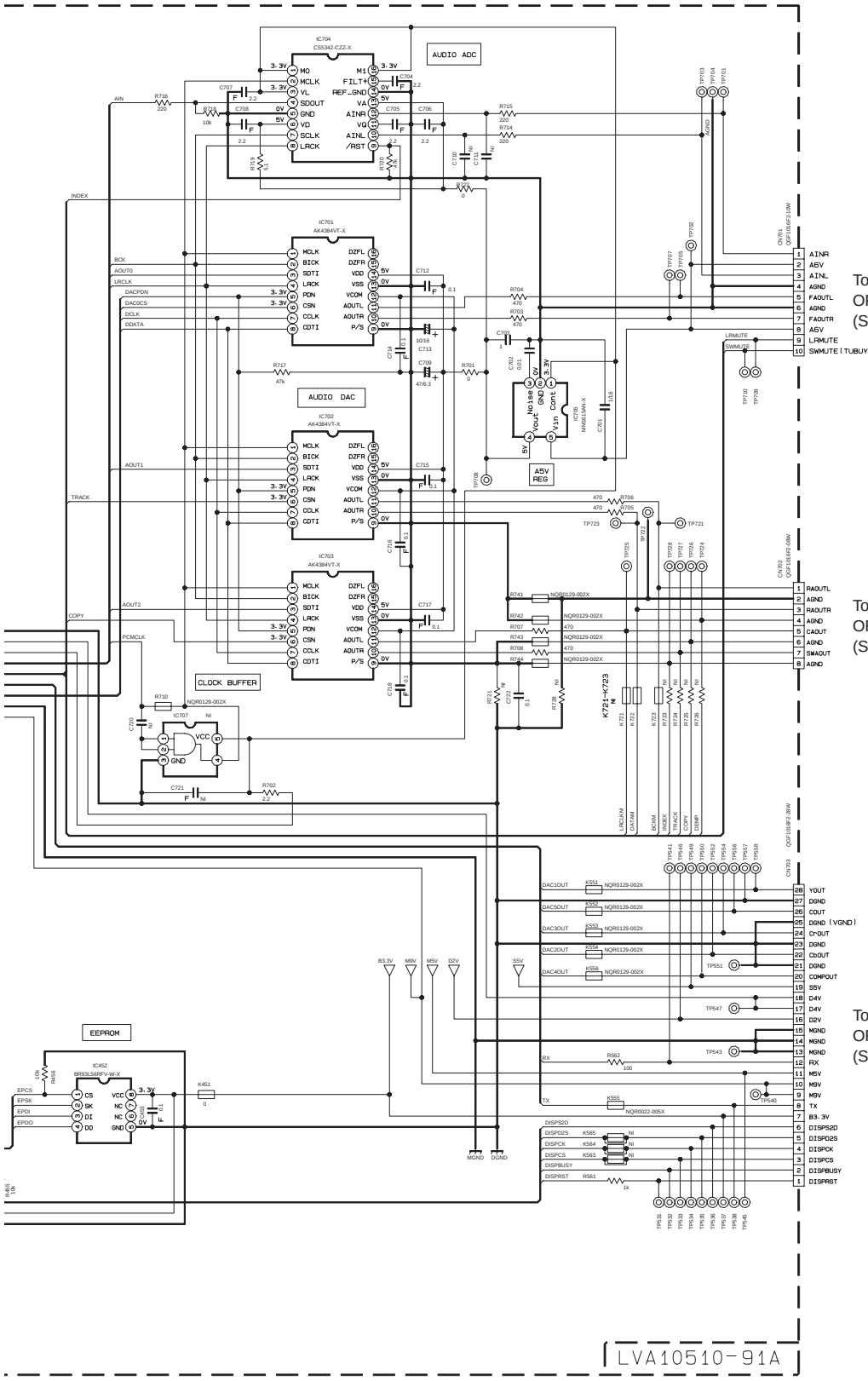

E DC-MEASURED WITH A DIGITAL VOLT METER WITHOUT INPUT SIGNAL.
-- A DVD Disc in the Tray 1. and STOP mode.

:RWISE SPECIFIED.
TORS ARE 1/10W ±5% METAL GLAZE RESISTOR. OR 0.5% METAL GLAZE RESISTOR.
ITORS ARE 50V. 25V. 16V. 10V or 6.3V CERAMIC CAPACITOR.
TANCE VALUES ARE IN OHM(Ω).
ITANCE VALUES ARE IN μF(p=pF).
ACITORS ARE SHOWN IN THE FORM OF CAPACITANCE(μF)/RATED VOLTAGE (V).
TANCE VALUES ARE IN μH(m=mH).
TOR NOT INSERTED PARTS.

4. DIGITAL TRANSISTOR

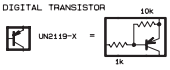

SHEET 8

■ DVD servo section (1/2) FMU-SD9-5M

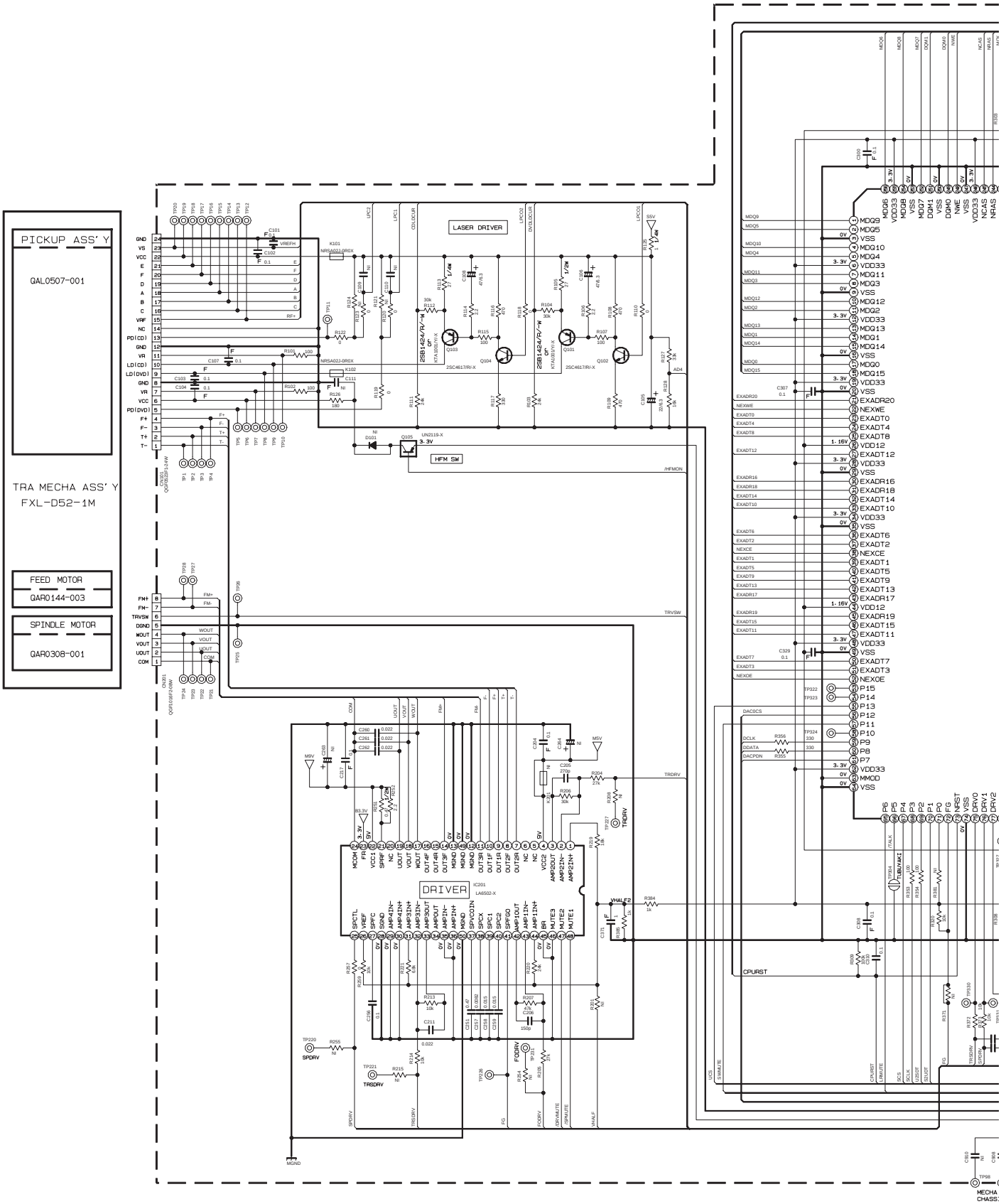

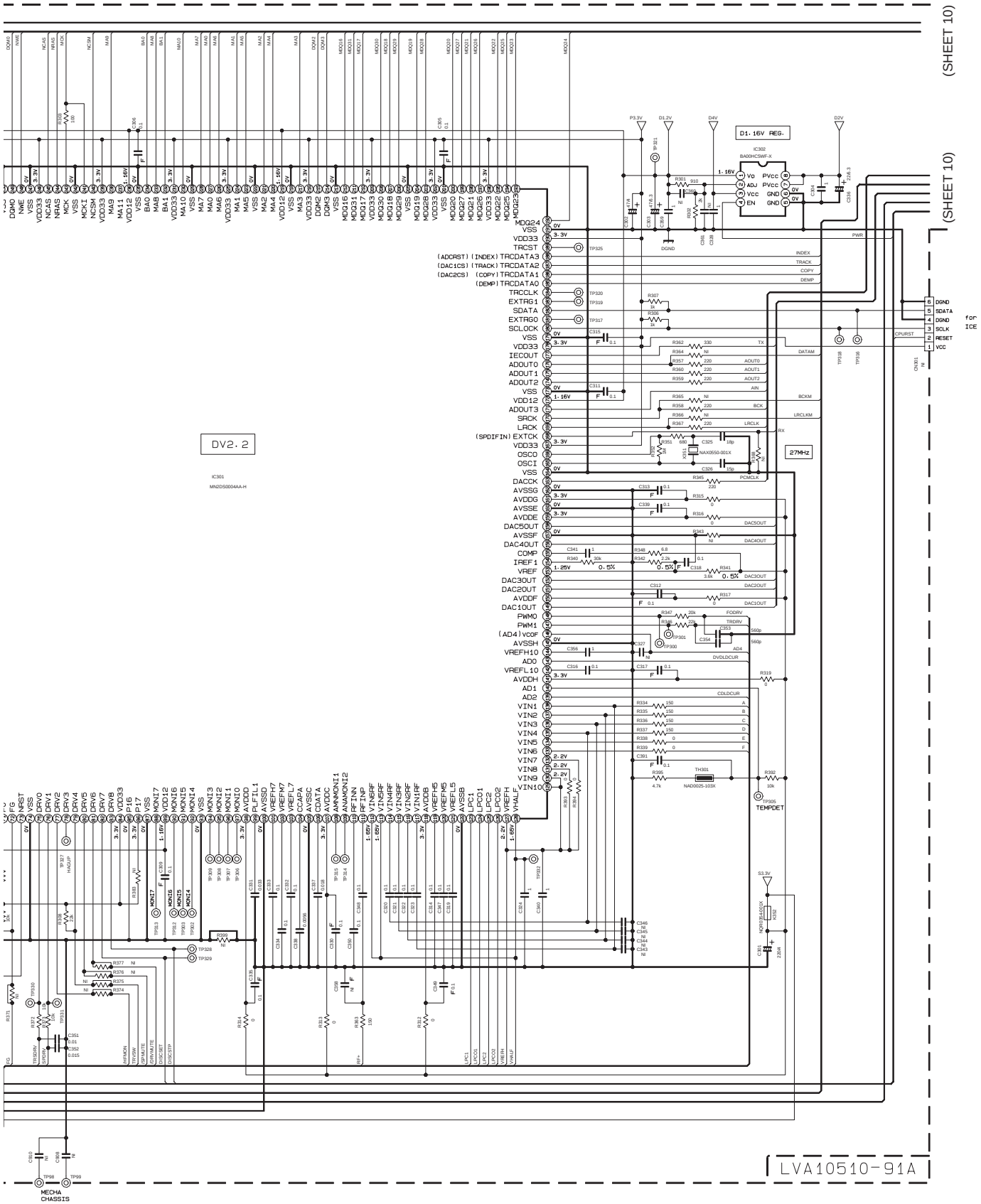
(SHEET 10)
(SHEET 10)
D1.16V REG.
IC302
BA00HCSWF-X
DV2.2
IC301
MN2DS0004AA-H
27MHz
NAX0550-001X
TEMPDET
NAD0025-103X
TH301
CN301
for ICE
DGND
SDATA
DGND
SCLK
RESET
VCC
CPURST
MECHA CHASSIS
LVA10510-91A

SHEET 9

■ DVD servo section (2/2) FMU-SD9-5M

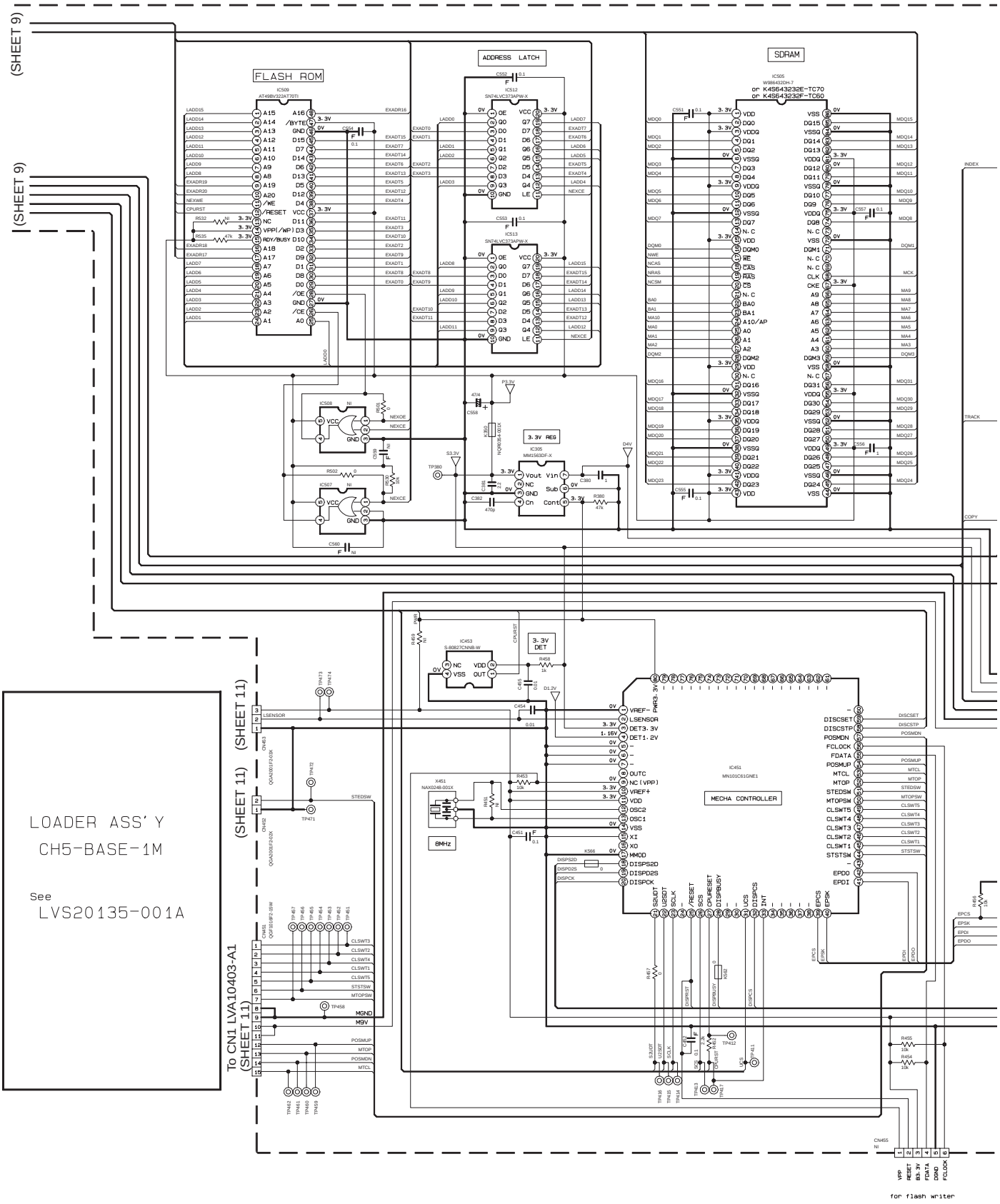

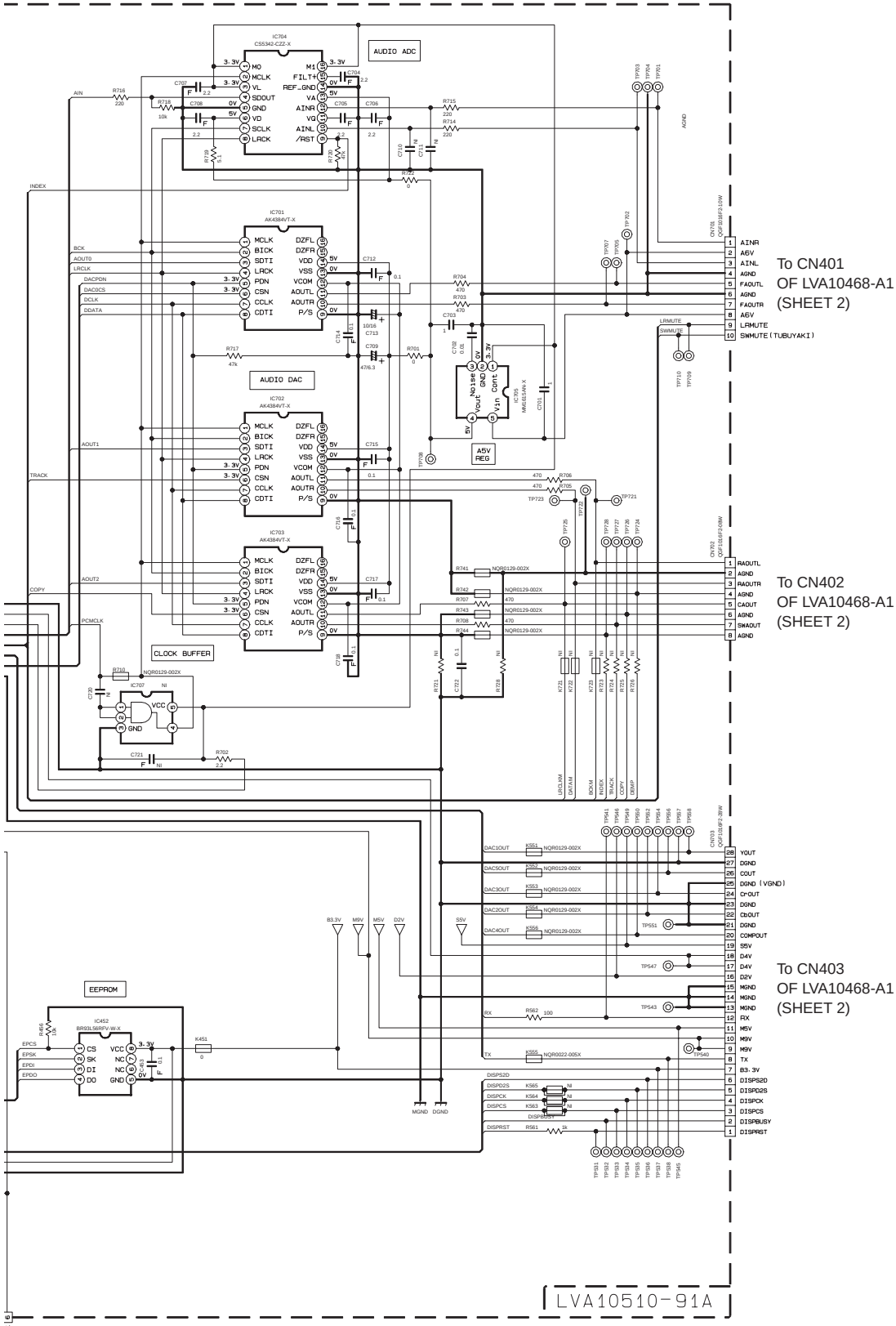

NOTES

1. VOLTAGES ARE DC-MEASURED WITH A DIGITAL VOLT METER WITHOUT INPUT SIGNAL.
   CONDITION ---- A DVD disc in the Tray 1. and STOP mode.

2. UNLESS OTHERWISE SPECIFIED.
   ALL RESISTORS ARE 1/10W ±5% METAL GLAZE RESISTOR. OR 0.5% METAL GLAZE RESISTOR.
   ALL CAPACITORS ARE 50V. 25V. 16V. 10V or 6.3V CERAMIC CAPACITOR.
   ALL RESISTANCE VALUES ARE IN OHM(Ω).
   ALL CAPACITANCE VALUES ARE IN μF(p=pF).
   ALL E.CAPACITORS ARE SHOWN IN THE FORM OF CAPACITANCE(μF)/RATED VOLTAGE (V).
   ALL INDUCTANCE VALUES ARE IN μH(m=mH).

3. NI STANDS FOR NOT INSERTED PARTS.

4. DIGITAL TRANSISTOR

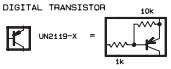

SHEET 10

■ DVD changer mechanism section

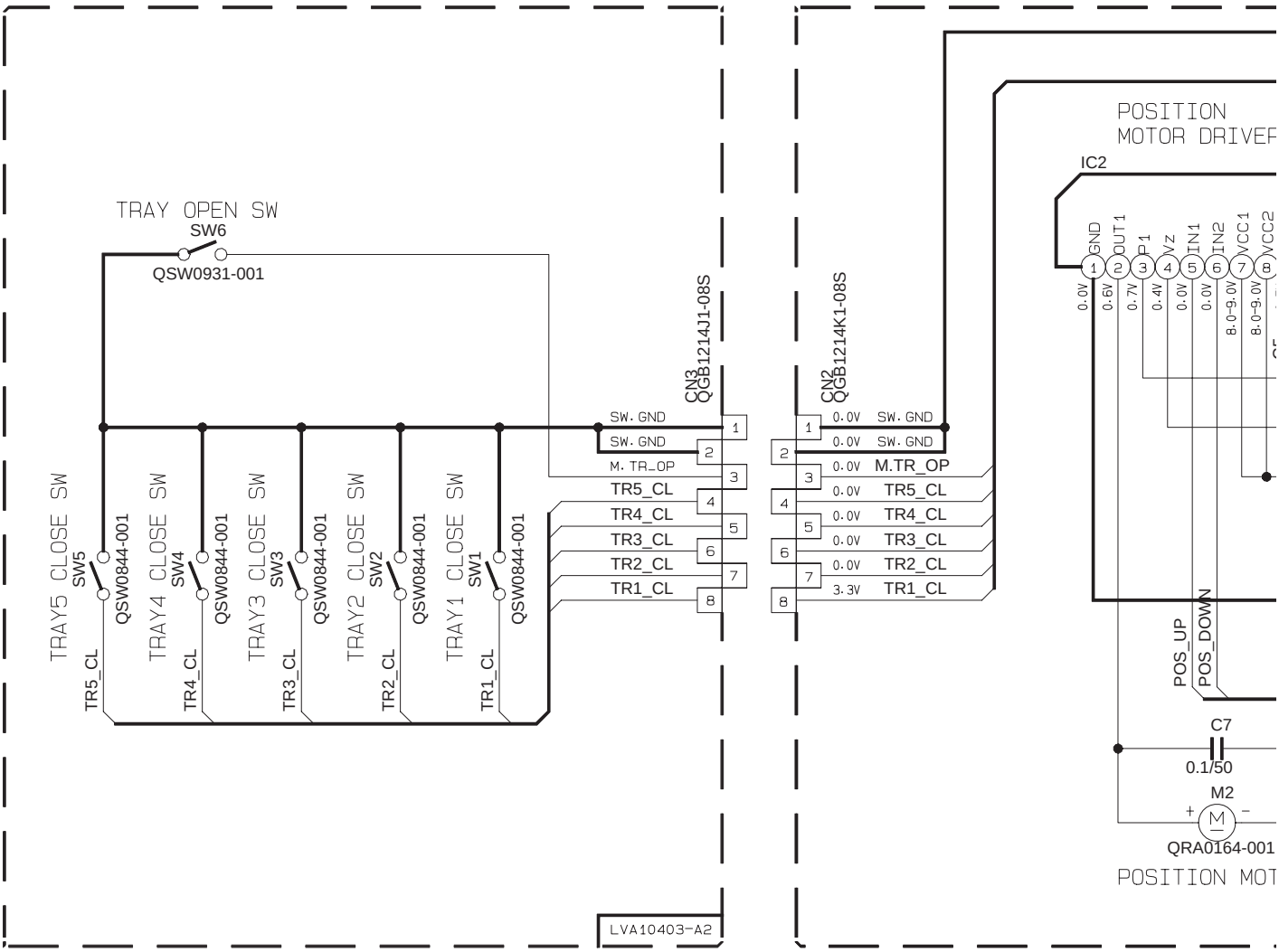

NOTES

1. VOLTAGES ARE DC-MEASURED WITH A DIGITAL VOLT METER.
   CONDITION:DISC1 STOP

2. UNLESS OTHERWISE SPECIFIED.
   ALL CAPACITORS ARE SHOWN IN THE FORM OF CAPACITANCE(μF)/RATED VOLTAGE(V).

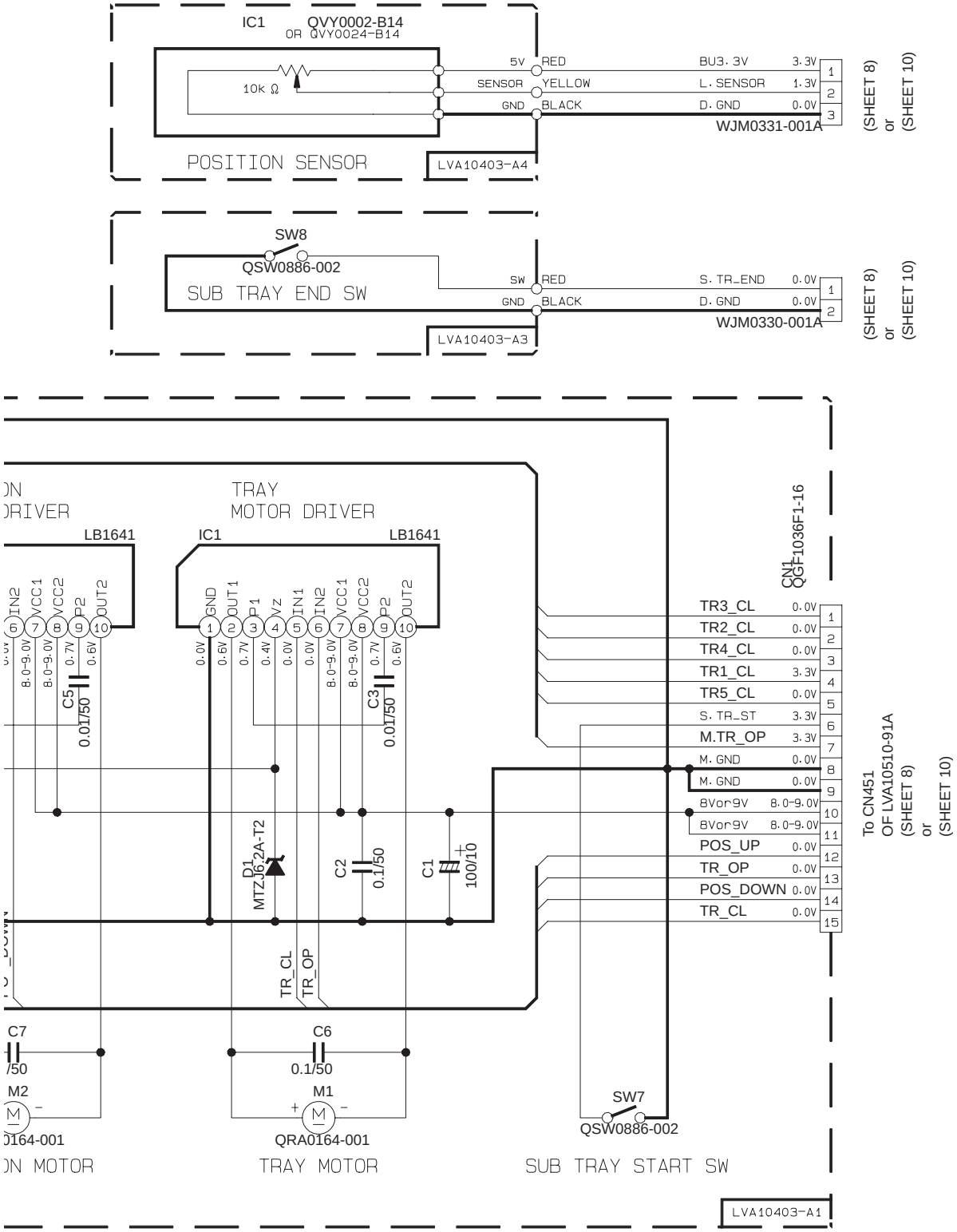
IC1
QVY0002-B14
OR QVY0024-B14
10k Ω
5V
SENSOR
GND
RED
YELLOW
BLACK
BU3.3V 3.3V
L.SENSOR 1.3V
D.GND 0.0V
WJM0331-001A
(SHEET 8)
or
(SHEET 10)
POSITION SENSOR
LVA10403-A4
SW8
QSW0886-002
SUB TRAY END SW
SW
GND
RED
BLACK
S.TR_END 0.0V
D.GND 0.0V
WJM0330-001A
(SHEET 8)
or
(SHEET 10)
LVA10403-A3
TRAY
MOTOR DRIVER
LB1641
IC1
LB1641
IN2
VCC1
VCC2
P2
OUT2
GND
OUT1
P1
Vz
IN1
IN2
VCC1
VCC2
P2
OUT2
C5
0.01/50
C3
0.01/50
D1
MTZJ6.2A-T2
C2
0.1/50
C1
100/10
TR_CL
TR_OP
C7
/50
C6
0.1/50
M2
M1
0164-001
QRA0164-001
ON MOTOR
TRAY MOTOR
SW7
QSW0886-002
SUB TRAY START SW
CN1
QGF1036F1-16
TR3_CL 0.0V
TR2_CL 0.0V
TR4_CL 0.0V
TR1_CL 3.3V
TR5_CL 0.0V
S.TR_ST 3.3V
M.TR_OP 3.3V
M.GND 0.0V
M.GND 0.0V
8Vor9V 8.0-9.0V
8Vor9V 8.0-9.0V
POS_UP 0.0V
TR_OP 0.0V
POS_DOWN 0.0V
TR_CL 0.0V
To CN451
OF LVA10510-91A
(SHEET 8)
or
(SHEET 10)
LVA10403-A1

SHEET 11

<Subwoofer section>

■ Amplifier section

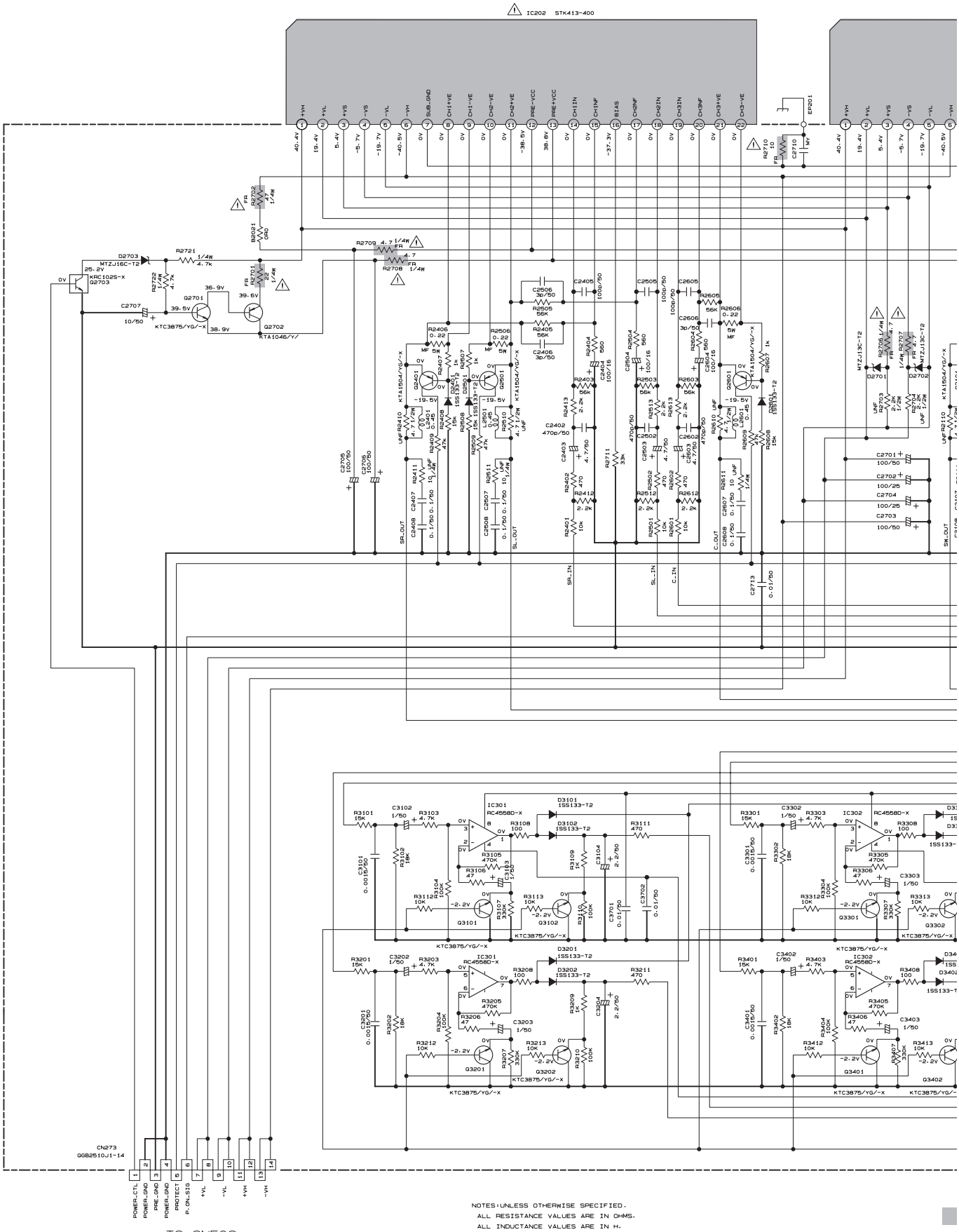

NOTES:UNLESS OTHERWISE SPECIFIED.
ALL RESISTANCE VALUES ARE IN OHMS.
ALL INDUCTANCE VALUES ARE IN H.
ALL CAPACITANCE VALUES ARE IN μF. (p=pF)
ALL CAPACITORS ARE SHOWN IN THE FORM OF CAPACITANCE(uF)/RATED VOLTAGE(V).
VOLTAGES ARE DC-MEASURED WITH A DIGITAL VOLT METER WITHOUT INPUT SIGNAL.

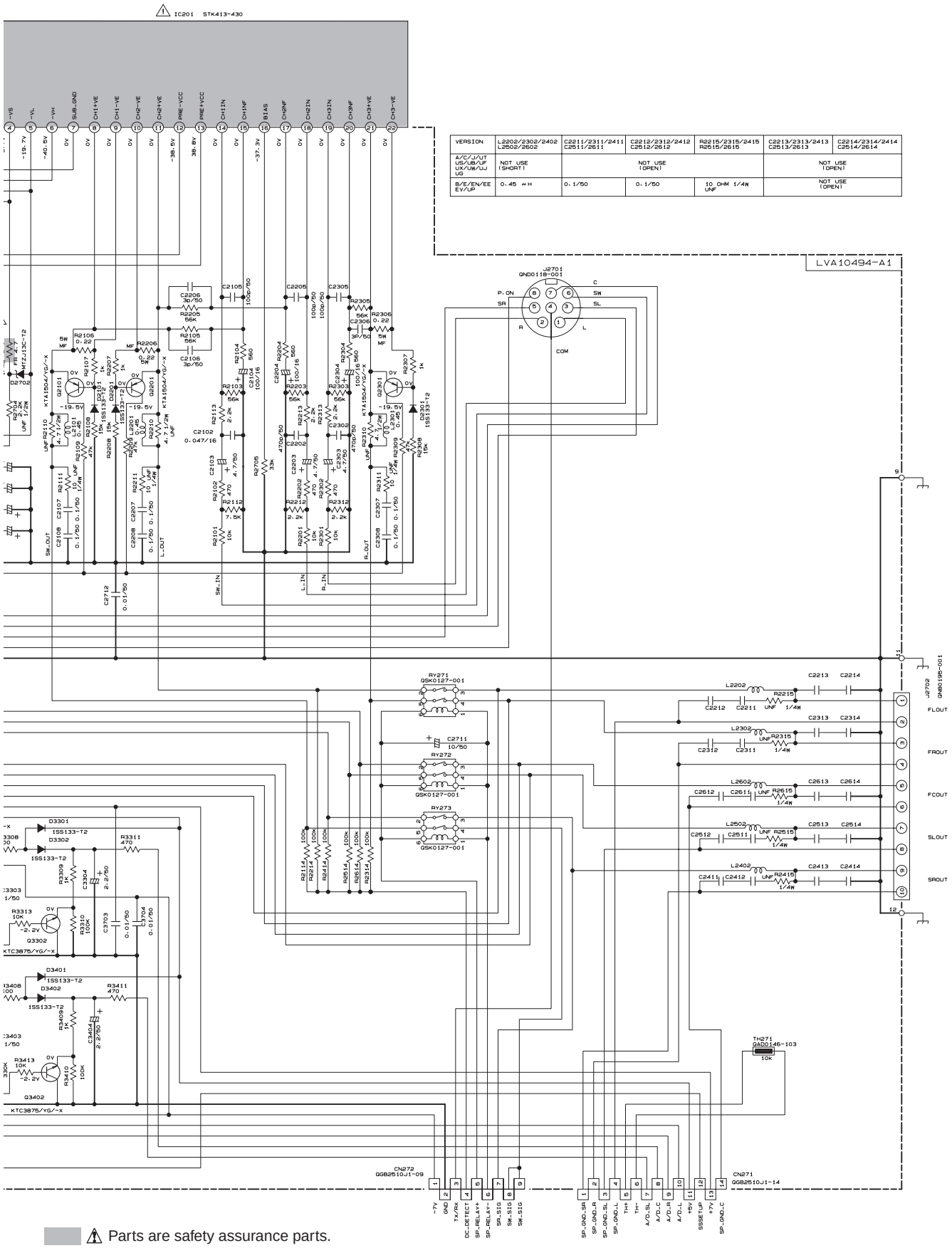

VERSION	L2202/2302/2402 L2502/2602	C2211/2311/2411 C2511/2611	C2212/2312/2412 C2512/2612	R2215/2315/2415 R2515/2615	C2213/2313/2413 C2513/2613	C2214/2314/2414 C2514/2614
A/C/J/UT US/UB/UF UX/UW/UJ UG	NOT USE (SHORT)	NOT USE (OPEN)			NOT USE (OPEN)	
B/E/EN/EE EV/UP	0.45 μH	0.1/50	0.1/50	10 OHM 1/4W UNF	NOT USE (OPEN)	

⚠ Parts are safety assurance parts. When replacing those parts make sure to use the specified one.

SHEET 12

■ Mother section

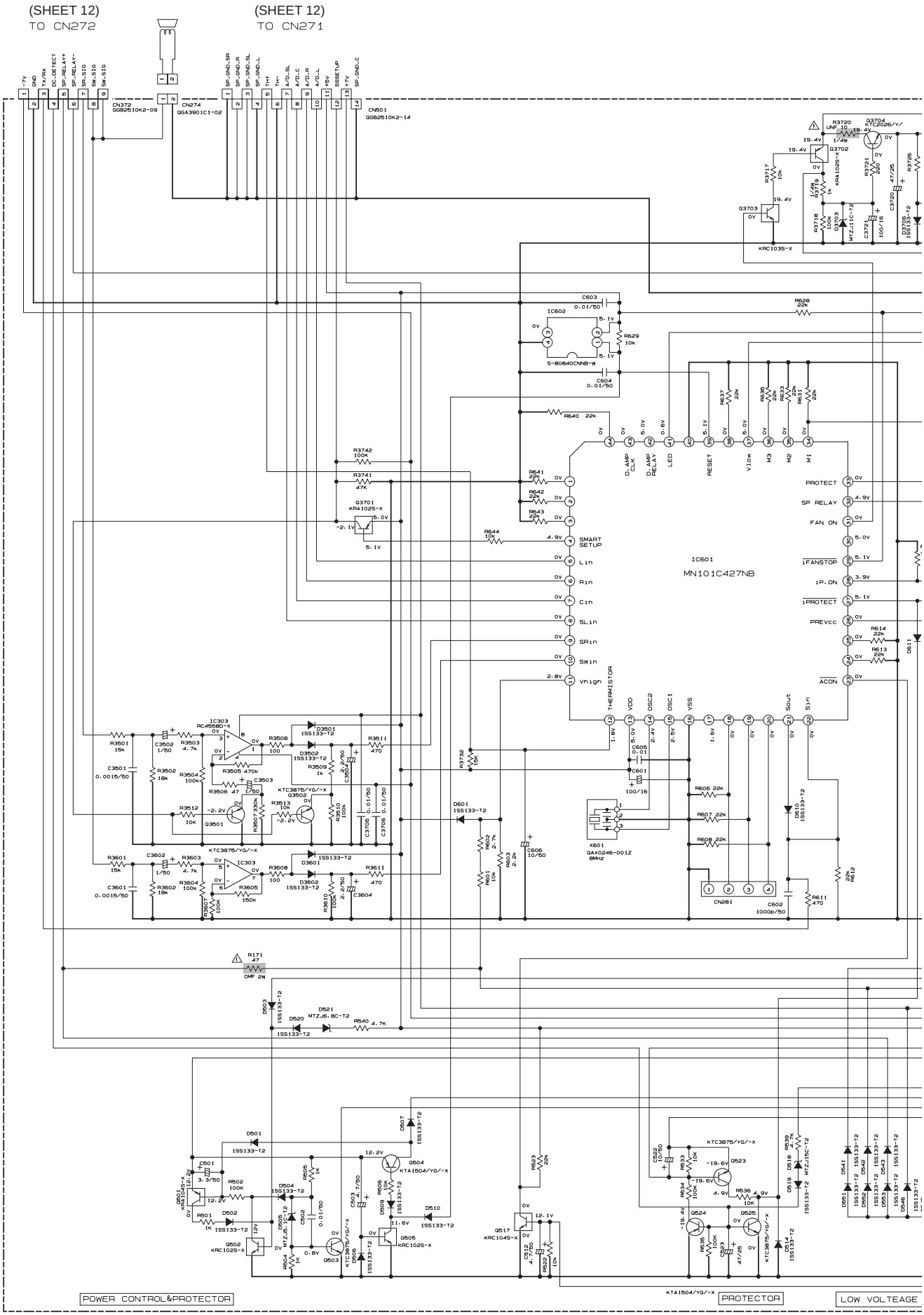

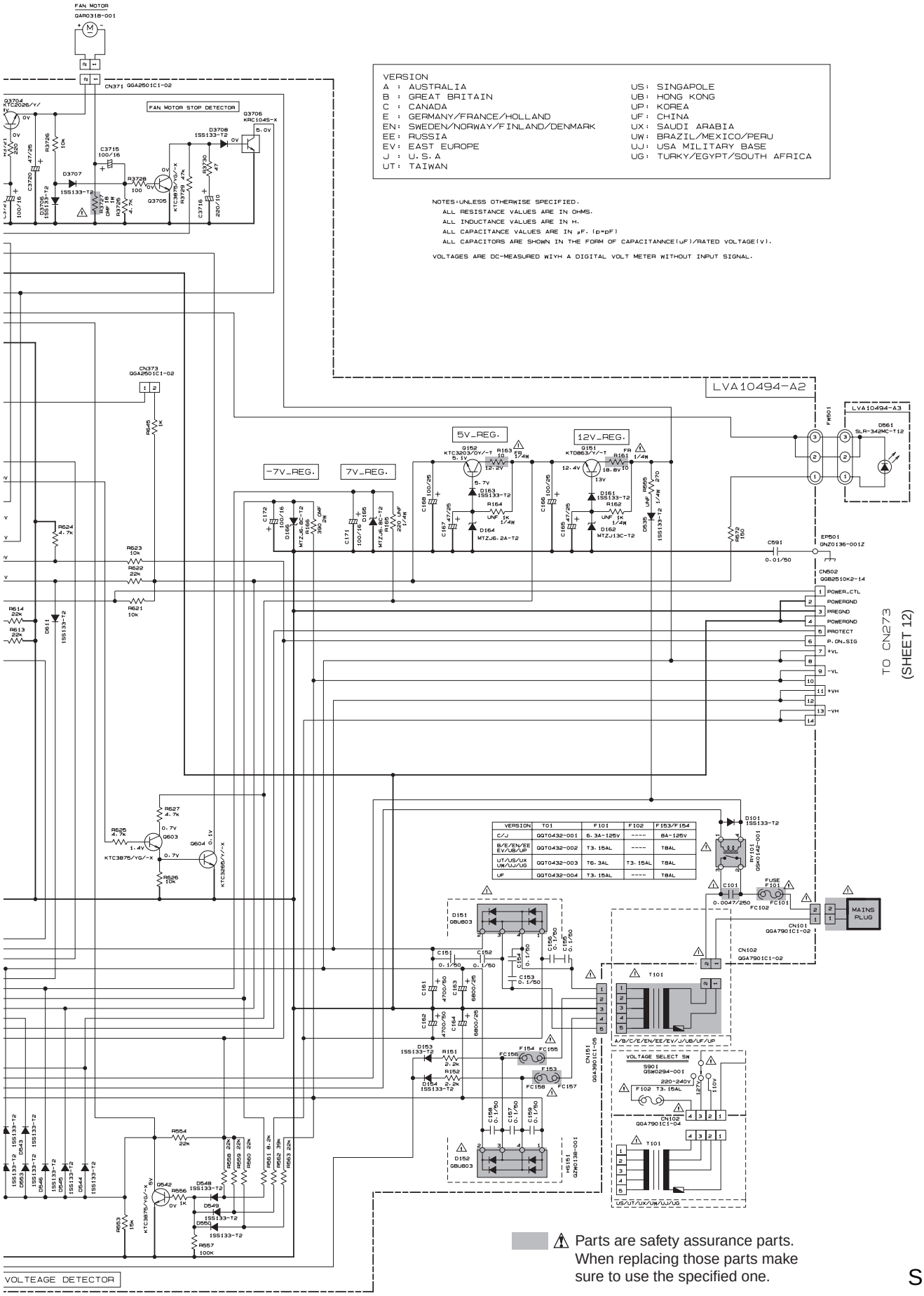

Parts are safety assurance parts. When replacing those parts make sure to use the specified one.

SHEET 13

Printed circuit boards

<Main body section>

■ Main board

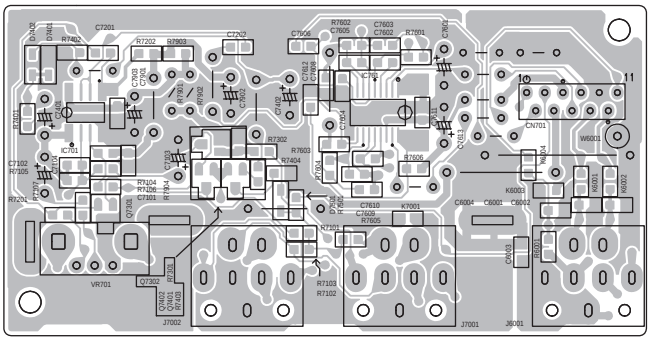

(Phone jack board)

(Main board)

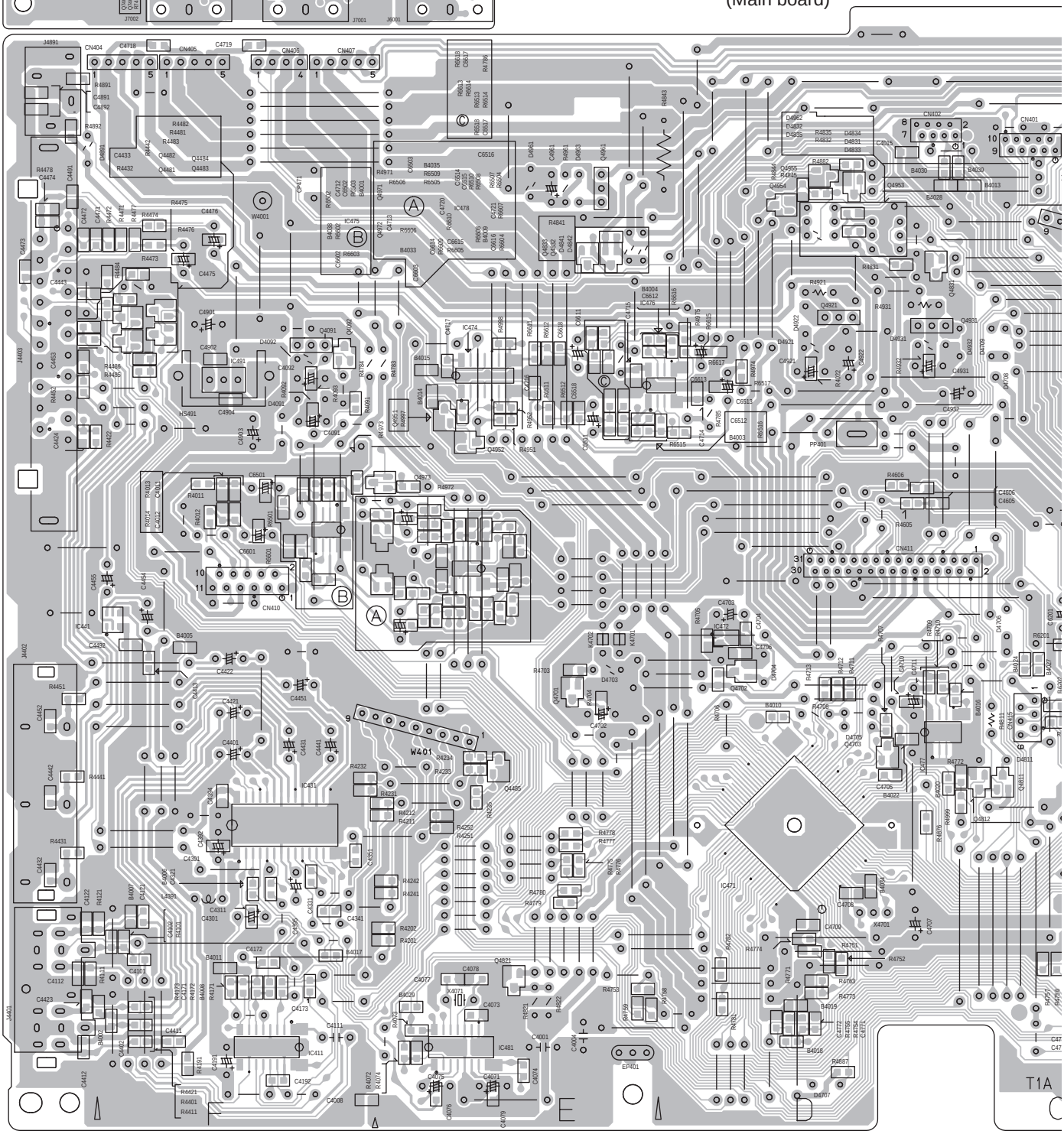

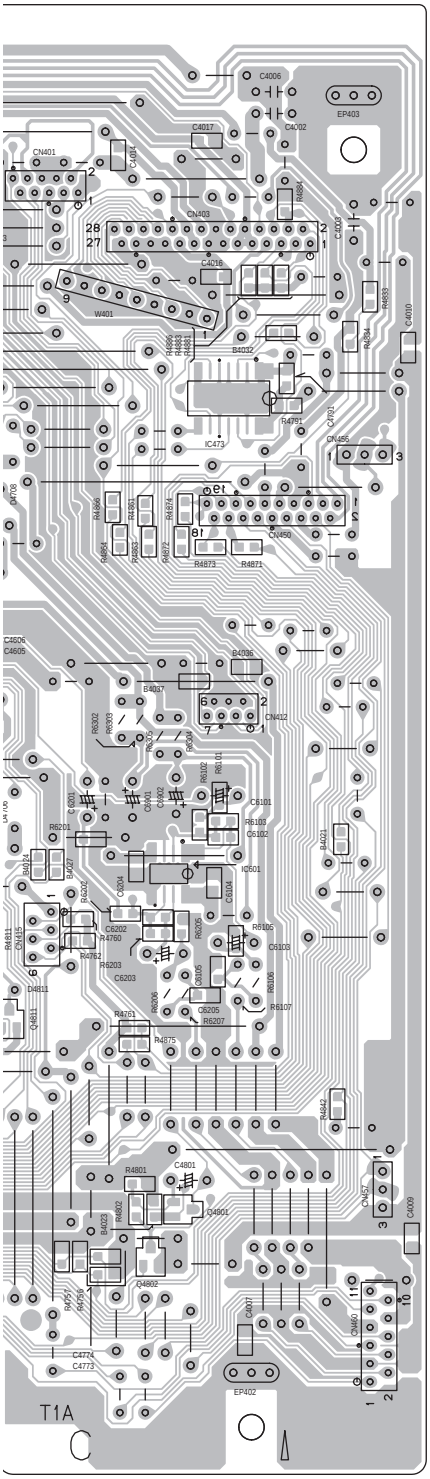

(Power supply board)

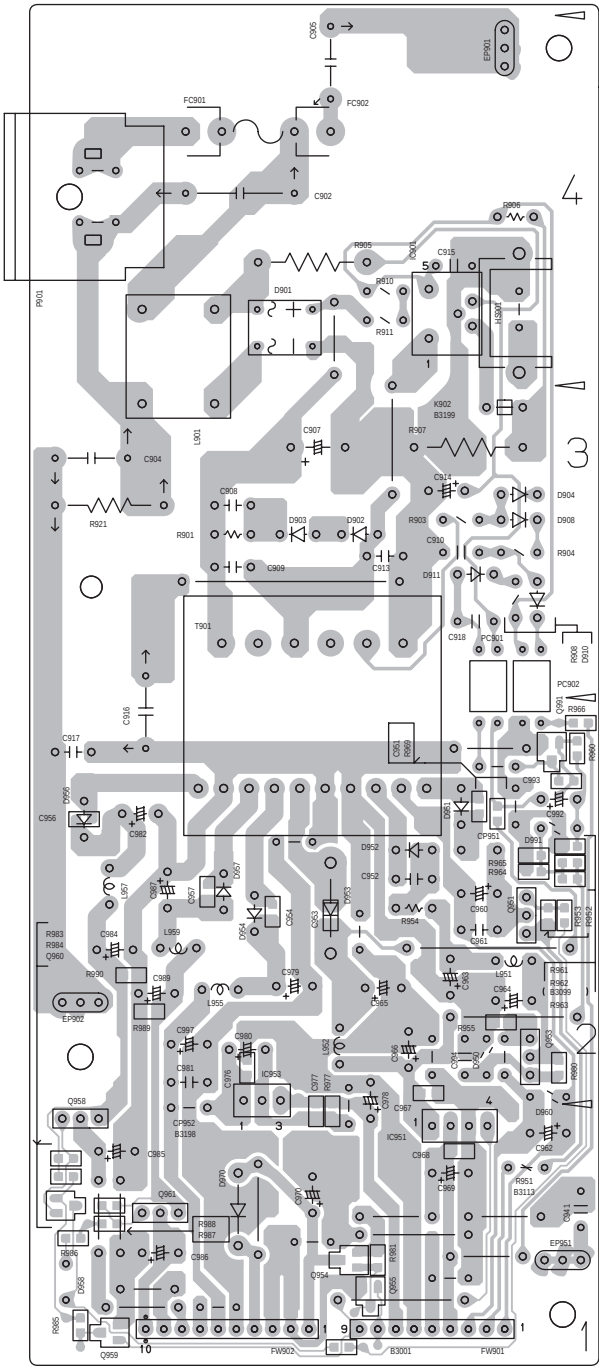

■ Front board

Forward side

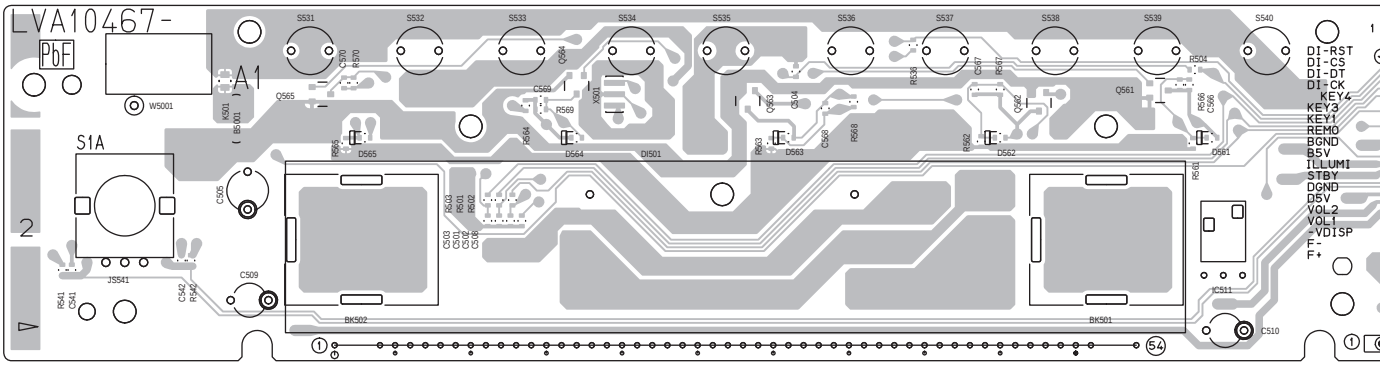

(Front b

(Operation board)

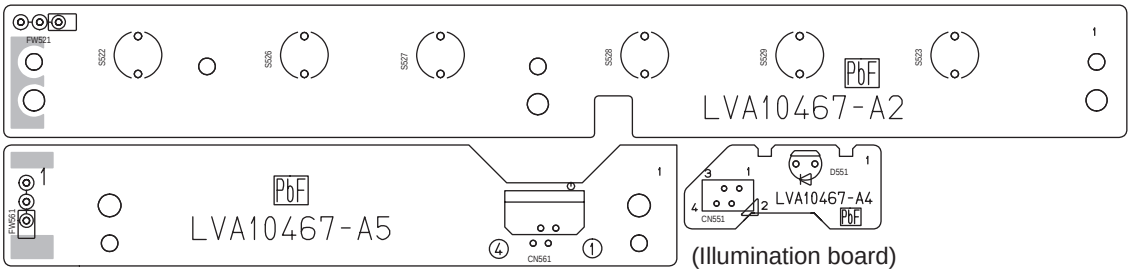

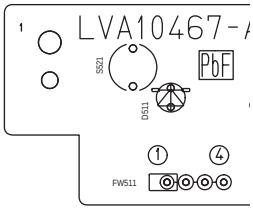

(Connect board)

(Illumination board)

(Power key boar

Reverse side

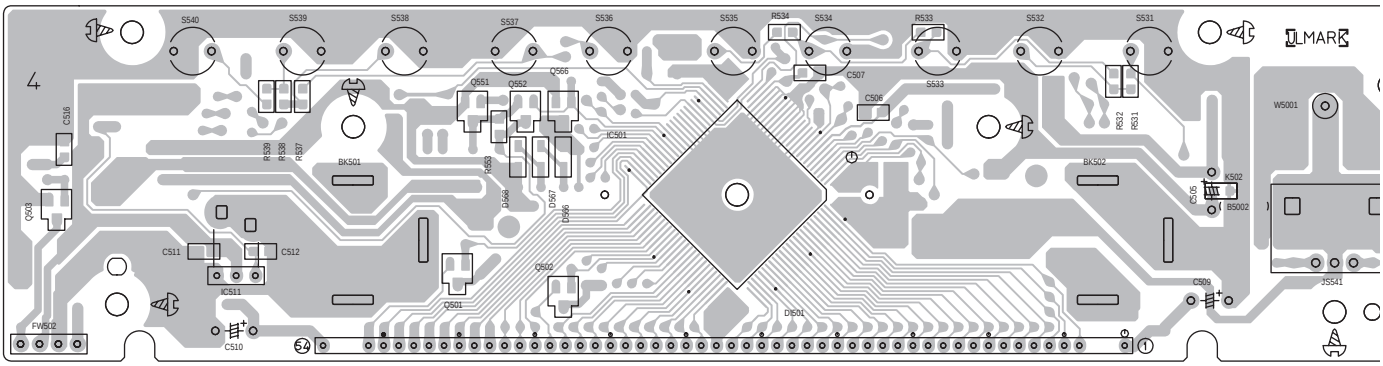

(Front board)

(Operation b

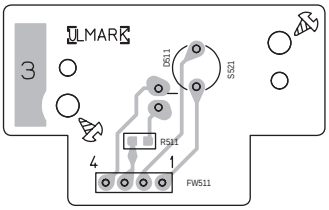

(Power key board)

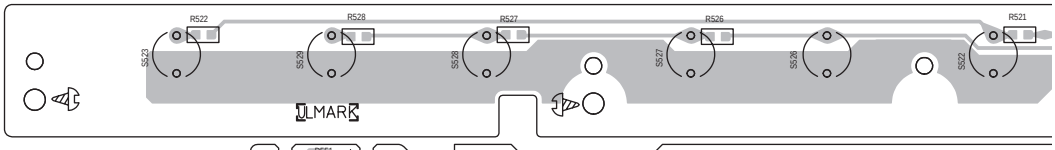

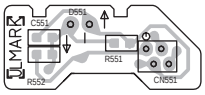

(Illumination board)

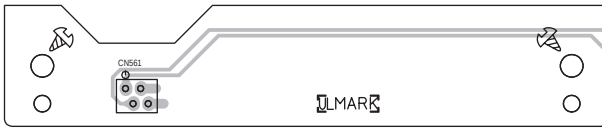

(Connect b

■ Audio board

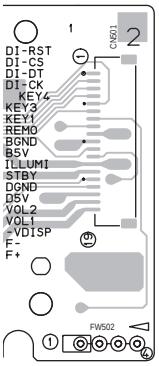

(Front board)

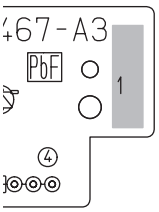

ey board)

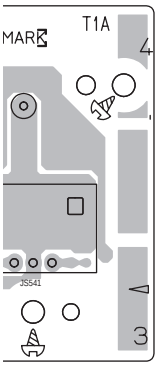

ration board)

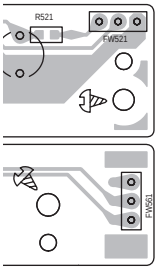

nnect board)

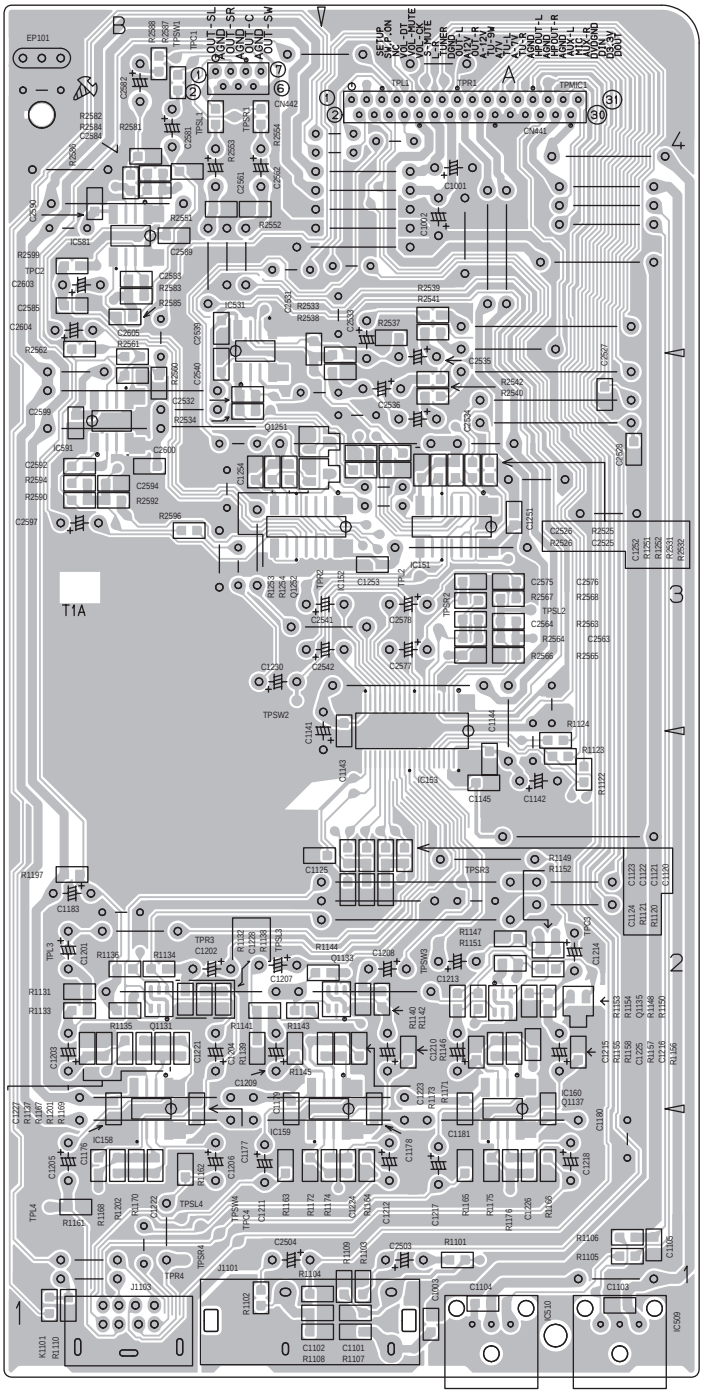

(Audio & Digital input board)

■ DVD servo board

Forward side

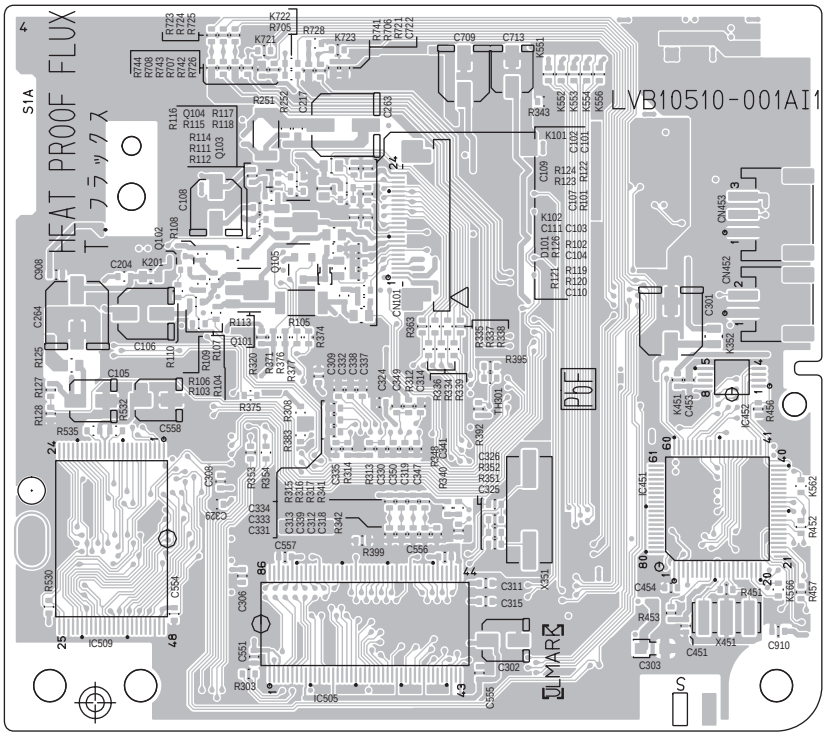

Reverse side

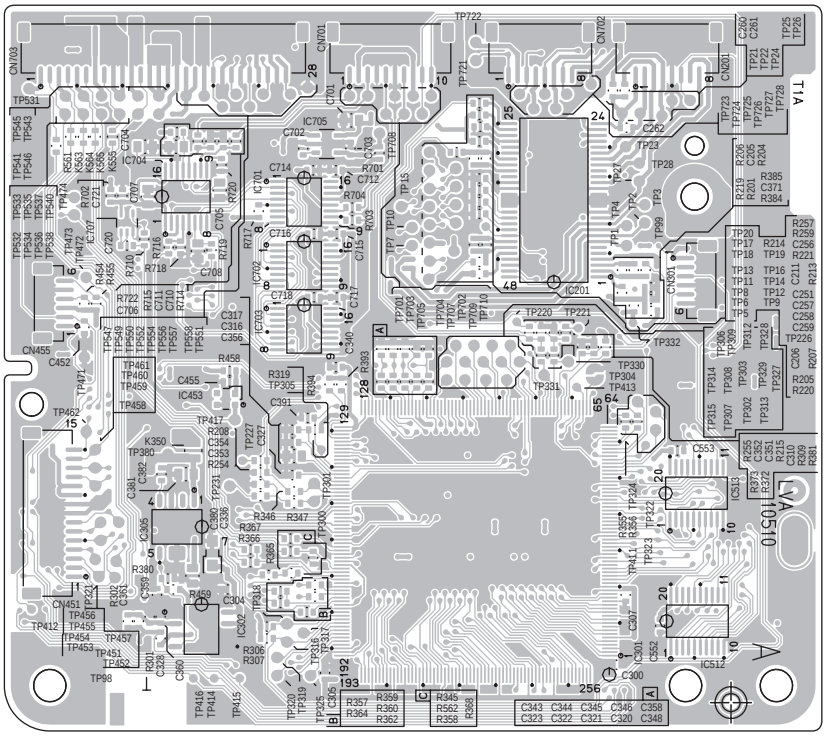

■ DVD loading board

(Motor board)

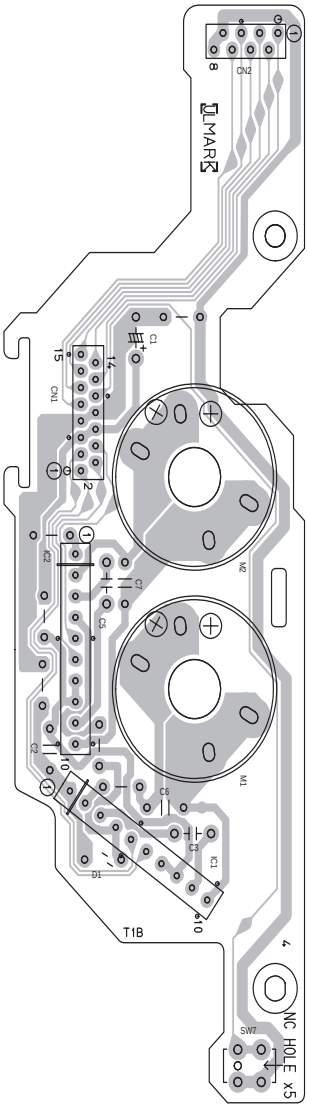

(Sensor board)

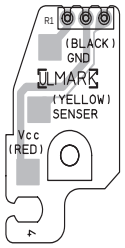

(Switch board)

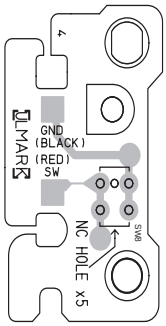

(Tray switch board)

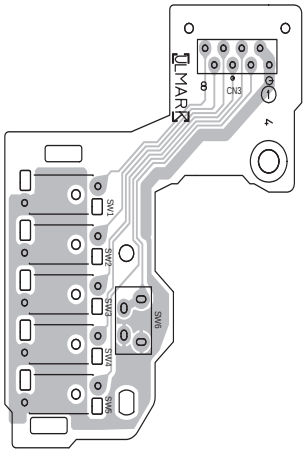

<Subwoofer section>

■ Amp board

(Amp board)

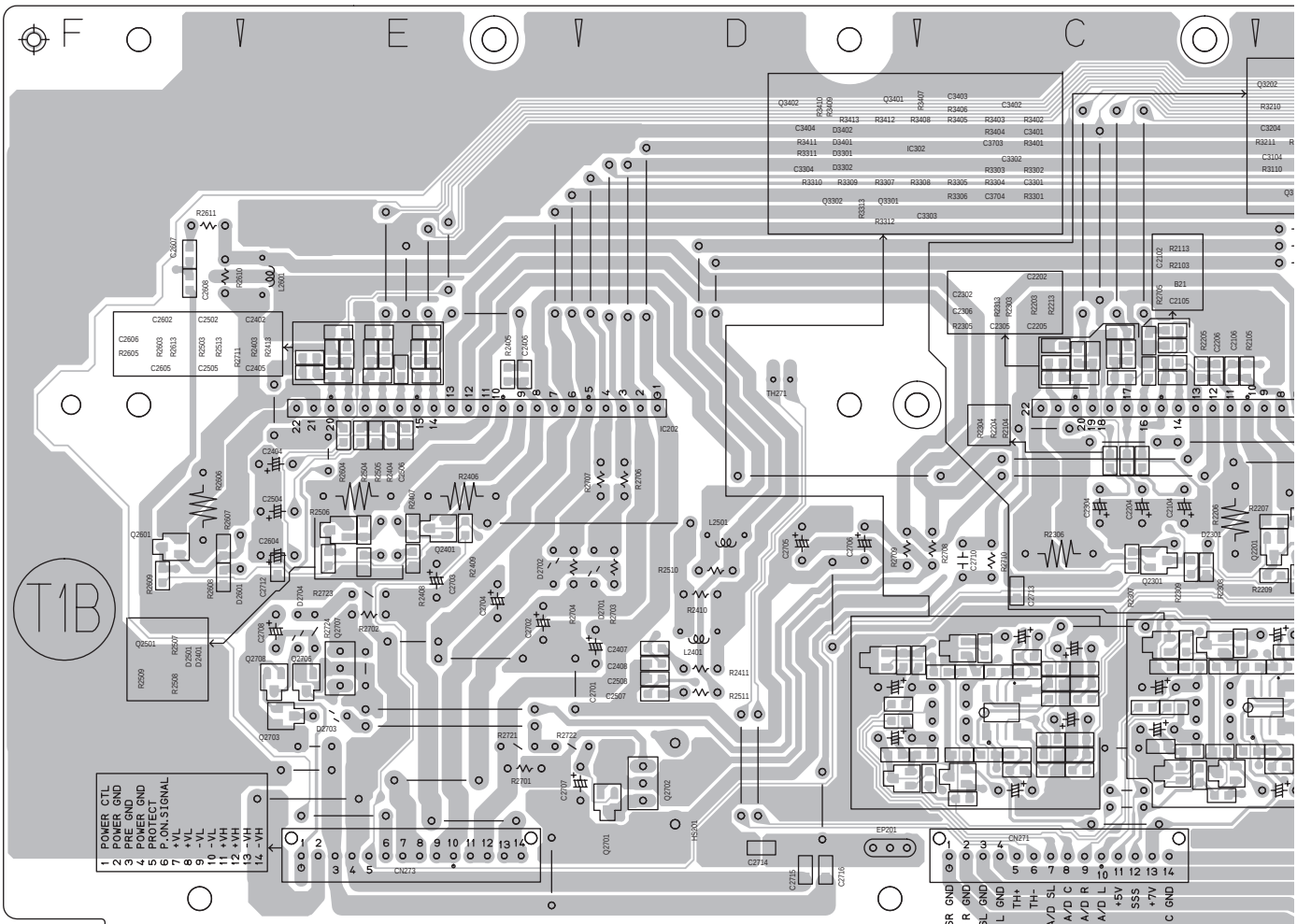

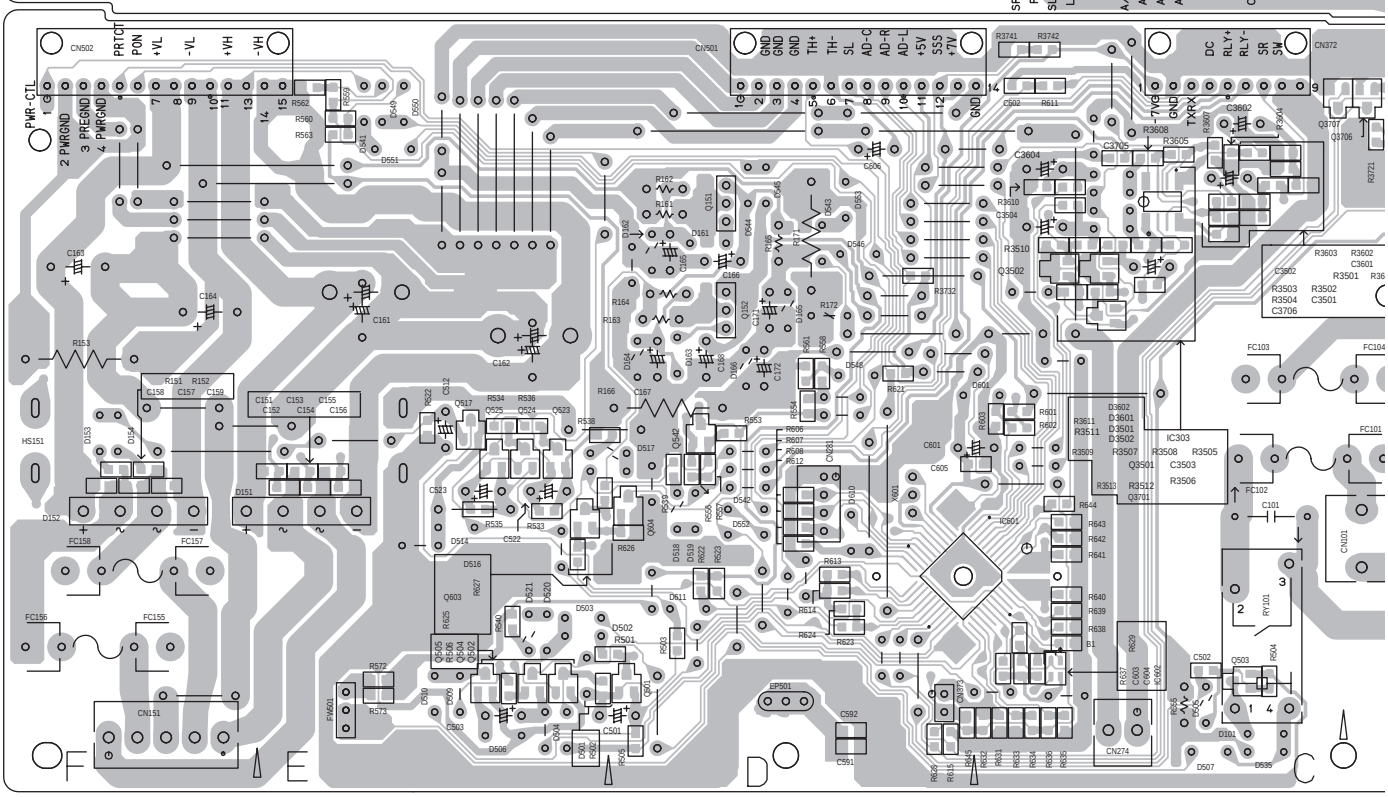

(Mother board)

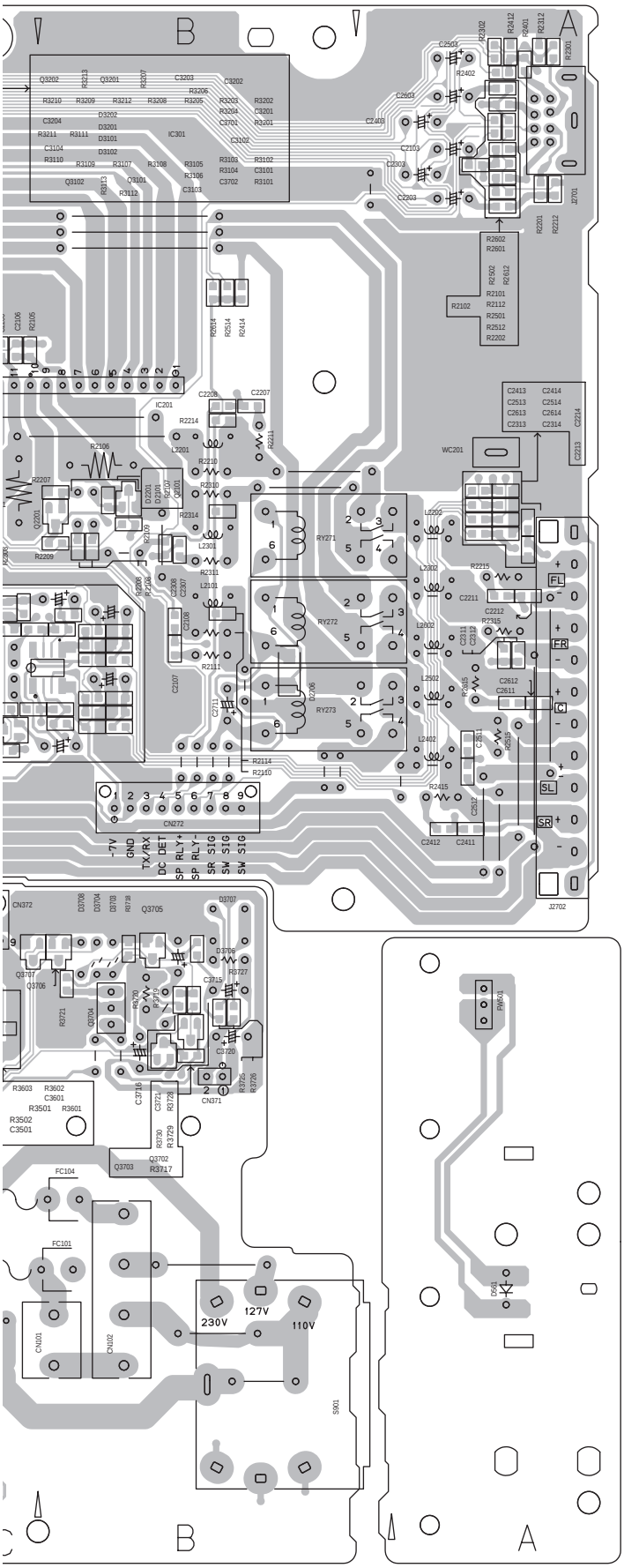
B
A
-7V
GND
TX/RX
DC DET
SP RLY+
SP RLY-
SR SIG
SW SIG
SW SIG
FL
FR
C
SL
SR
230V
127V
110V

(LED board)

JVC

VICTOR COMPANY OF JAPAN, LIMITED

AV & MULTIMEDIA COMPANY AUDIO/VIDEO SYSTEMS CATEGORY 10-1,1chome,Ohwatari-machi,Maebashi-city,371-8543,Japan

(No.MB184SCH)

Printed in Japan
WPC

PARTS LIST

[TH-M303]
[TH-M301]

* All printed circuit boards and its assemblies are not available as service parts.

TH-M303

Area suffix

J ---------- U.S.A.
C ---------- Canada

TH-M301

Area suffix

J ---------- U.S.A.

- Contents -

Exploded view of general assembly and parts list (Block No.M1) ---------- 3- 2
Speaker assembly and parts list (Subwoofer) (Block No.M2) ---------- 3- 5
DVD mechanism assembly and parts list (Block No.MJ) ---------- 3- 7
DVD changer mechanism assembly and parts list (FMU-SD9-1M)(Block No.MK) 3- 9
DVD changer mechanism assembly and parts list (FMU-SD9-5M)(Block No.MT) 3-11
Electrical parts list (Block No.01~08) ---------- 3-13
Packing materials and accessories parts list (Block No.M3) ---------- 3-26

Exploded view of general assembly and parts list

Block No. M 1 M M

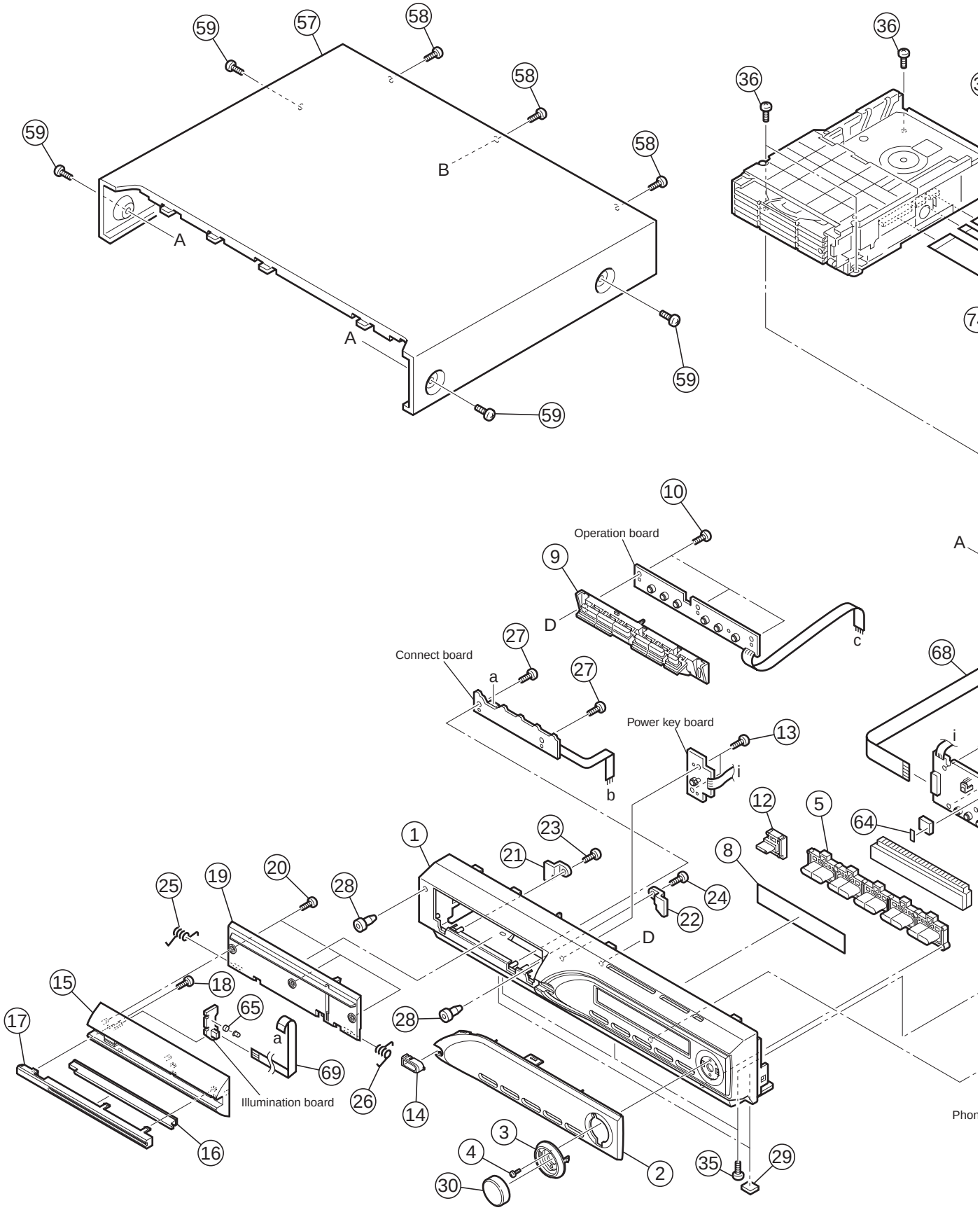

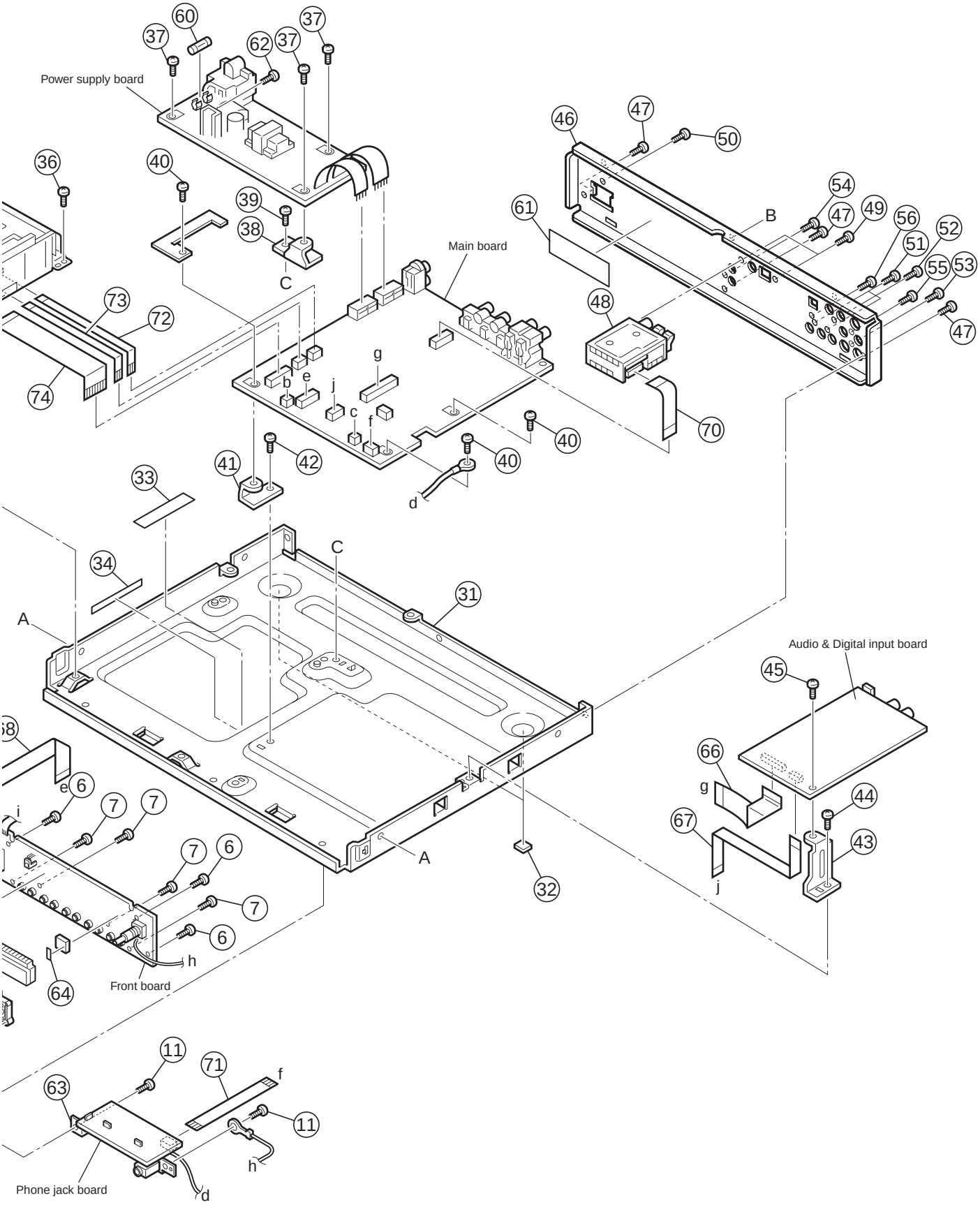
Power supply board
Main board
Audio & Digital input board
Front board
Phone jack board
A
B
C
d
e
f
g
h
i
j
31
32
33
34
36
37
38
39
40
41
42
43
44
45
46
47
48
49
50
51
52
53
54
55
56
60
61
62
63
64
66
67
70
71
72
73
74
6
7
11

General assembly

Block No. [M][1][M][M]

⚠ Symbol No.	Part No.	Part Name	Description	Local
1	LV10858-001A	FRONT PANEL		
2	LV21605-001A	FL LENS		
3	LV34588-001A	VOL RING		
4	QYSDSF2608Z	SCREW	2.6mm x 8mm	
5	LV21606-001A	BUTTON(DISC)		
6	QYSDSF2608Z	SCREW	2.6mm x 8mm(x3)	
7	QYSDSF2608Z	SCREW	2.6mm x 8mm(x4)	
8	LV42851-006A	FL SCREEN		
9	LV21607-001A	BUTTON(TOP)		
10	QYSDSF2612Z	TAP SCREW	M2.6 x 12mm(x3)	
11	QYSDSF2608Z	SCREW	2.6mm x 8mm(x2)	
12	LV34590-001A	BTN(POWER) ASSY		
13	QYSDSF2608Z	SCREW	2.6mm x 8mm(x2)	
14	LV43663-001A	ORNAMENT(POWER)		
15	LV21608-001A	DVD DOOR		M303C, M303J
15	LV21608-007A	DVD DOOR		M301J
16	LV34592-002A	DOOR LENS		
17	LV34593-001A	ORNAMENT(DOOR)		
18	QYSDSF2608Z	SCREW	2.6mm x 8mm	
19	LV21609-002A	DOOR HOLDER		
20	QYSDSF2608Z	SCREW	2.6mm x 8mm(x3)	
21	LV41694-001A	DOOR BKT(L)		
22	LV41695-001A	DOOR BKT(R)		
23	QYSDSF2608Z	SCREW	2.6mm x 8mm	
24	QYSDSF2608Z	SCREW	2.6mm x 8mm	
25	LV43806-001A	DOOR SPRING(L)		
26	LV43665-001A	DOOR SPRING		
27	QYSDSF2608Z	SCREW	2.6mm x 8mm(x2)	
28	E69897-002	CUSHION	(x2)	
29	LV40301-001A	FELT SPACER	(x2)	
30	LV34594-001A	VOLUME KNOB		
31	LV10770-004A	BOTTOM CHASSIS		
32	LV40301-002A	FELT SPACER	(x2)	
33	LV30225-0T7A	SPACER		
34	LV30225-0T8A	SPACER		
35	QYSDST3006Z	TAP SCREW	3mm x 6mm(x3)	
36	QYSDST3006Z	TAP SCREW	3mm x 6mm(x4)	
37	QYSDST3006Z	TAP SCREW	3mm x 6mm(x3)	
38	LV41548-001A-NK	C.B BKT		
39	QYSDST3006Z	TAP SCREW	3mm x 6mm	
40	QYSBST3008Z	TH TAP SCREW	3mm x 8mm(x3)	
41	LV41548-001A-NK	C.B BKT		
42	QYSDST3006Z	TAP SCREW	3mm x 6mm	
43	LV43333-001A	BKT(DSP)		
44	QYSDST3006Z	TAP SCREW	3mm x 6mm	
45	QYSDST3006Z	TAP SCREW	3mm x 6mm	
46	LV21450-043A	REAR PANEL		M303C, M303J
46	LV21450-052A	REAR PANEL		M301J
47	QYSBSGY3008M	SPECIAL SCREW	3mm x 8mm(x3)	
48	QAU0346-001	TUNER		
49	QYSBSGY3008M	SPECIAL SCREW	3mm x 8mm(x2)	
50	QYSBSGY3008M	SPECIAL SCREW	3mm x 8mm	
51	QYSBSGY3008M	SPECIAL SCREW	3mm x 8mm(x2)	
52	QYSBSGY3008M	SPECIAL SCREW	3mm x 8mm	
53	QYSBSGY3008M	SPECIAL SCREW	3mm x 8mm	
54	QYSBSGY3008M	SPECIAL SCREW	3mm x 8mm	
55	QYSBST3006M	TAPPING SCREW	3mm x 6mm	
56	QYSBSGY3008M	SPECIAL SCREW	3mm x 8mm	
57	LV21610-001A/S/	METAL COVER		
58	QYSBSGY3008M	SPECIAL SCREW	3mm x 8mm(x3)	
59	QYSDSG3006N	TAP SCREW	M3 x 6mm(x4)	
⚠ 60	QMF51U1-1R6-J8	FUSE	F 901 1.6A AC125V	
61	LV41843-002A	LASER CAUTION		
62	QYSBSE3008Z	SCREW	3mm x 8mm	
63	LV43661-001A	BKT		
64	LV30225-0M9A	SPACER	(x2)	
65	LV42683-001A	SPACER		
66	QUQH10-3112AJ	FFC WIRE		
67	QUQH10-0714AJ	FFC WIRE		
68	QUQH10-1920AJ	FFC WIRE		
69	QUQ110-0418AJ	FFC WIRE		
70	QUQH12-1107AJ	FFC WIRE		
71	QUQH12-0510AJ	FFC WIRE		
72	QUQH10-0817AJ	FFC WIRE		
73	QUQH10-1017AJ	FFC WIRE		
74	QUQH10-2817AJ	FFC WIRE		

Speaker assembly and parts list

Block No. M 2 M M

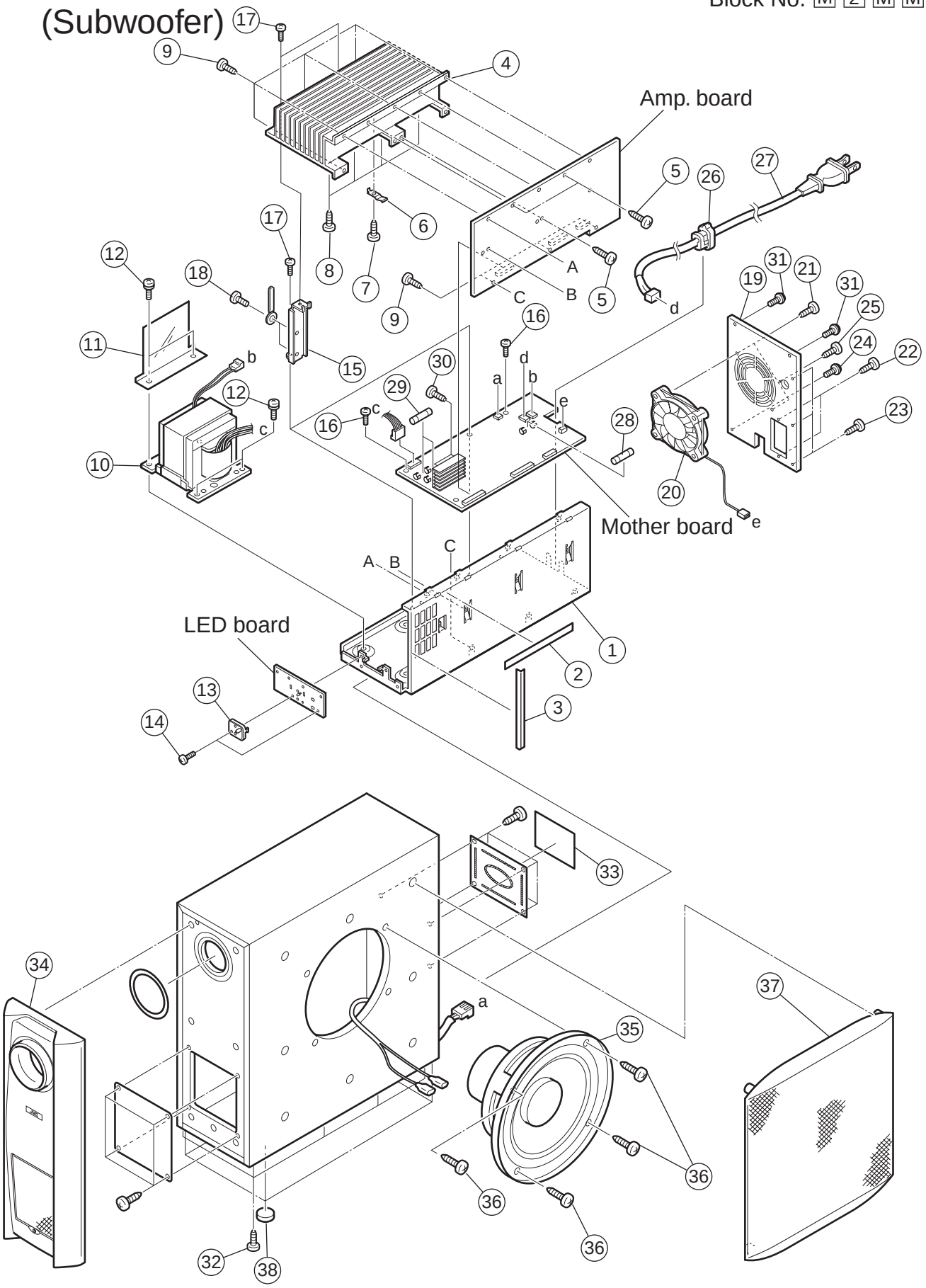

Speaker (Subwoofer)

Block No. [M][2][M][M]

⚠ Symbol No.	Part No.	Part Name	Description	Local
1	LV10875-002A	CHASSIS BASE		
2	LV30225-0T5A	SPACER		
3	LV30225-0T6A	SPACER		
4	LV10876-001A	HEAT SINK		
5	QYSBSG3010E	TAPPING SCREW	3mm x 10mm(x3)	
6	LV43691-001A	HOLD SPRING		
7	QYSBSG3010E	TAPPING SCREW	3mm x 10mm	
8	QYSBSG3016E	TAP SCREW	M3 x 16mm(x4)	
9	QYSBSG3010E	TAPPING SCREW	3mm x 10mm(x9)	
⚠ 10	QQT0432-001	POWER TRANSF		
11	LV43823-001A	BARRIER		
12	QYSDSTL4008E	TAP SCREW	M4 x 8mm(x4)	
13	LV43692-001A	LED HOLDER		
14	QYSBSG3010E	TAPPING SCREW	3mm x 10mm(x2)	
15	LV34712-001A	HEAT SINK BKT	(x2)	
16	QYSBSG3010E	TAPPING SCREW	3mm x 10mm(x2)	
17	QYSBSG3010E	TAPPING SCREW	3mm x 10mm(x4)	
18	QYSBSG3006Z	TAPPING SCREW	3mm x 6mm(x4)	
19	LV21652-010A	REAR PANEL		
20	QAR0318-001	FAN MOTOR		
21	QYSBSGY3008M	SPECIAL SCREW	3mm x 8mm(x2)	
22	QYSBSGY3008M	SPECIAL SCREW	3mm x 8mm(x2)	
23	QYSBSGY3008M	SPECIAL SCREW	3mm x 8mm(x3)	
24	E73562-003	SCREW		
25	QYSBST3006M	TAPPING SCREW	3mm x 6mm	
⚠ 26	QZW0033-001	STRAIN RELIEF		
⚠ 27	QMPD380-200-JN	POWER CORD(US/CA)	2m BLACK	
⚠ 28	QMF51U1-6R3-J8	FUSE	F101 6.3A AC125V	
⚠ 29	QMF51U1-8R0-J8	FUSE	F153 F154 8A AC125V(x2)	
30	QYSPSPD3008Z	SCREW	3mm x 8mm(x2)	
31	QYSDSA4016M	TAP SCREW	M4 x 16mm(x2)	
32	QYSDST4014M	TAP SCREW	M4 x 14mm(x8)	
33	LV34891-050A	RATING LABEL		M303C, M303J
33	LV34891-049A	RATING LABEL		M301J
34	9900031901	BAFFLE ASSY		
35	CR160068-01	CONE SPK		
36	7001541606	SCREW	(x4)	
37	9916012001	NET ASSY		
38	9000007931	FOOT	(x4)	

DVD mechanism assembly and parts list

Block No. M J M M

FXL-D52-1M

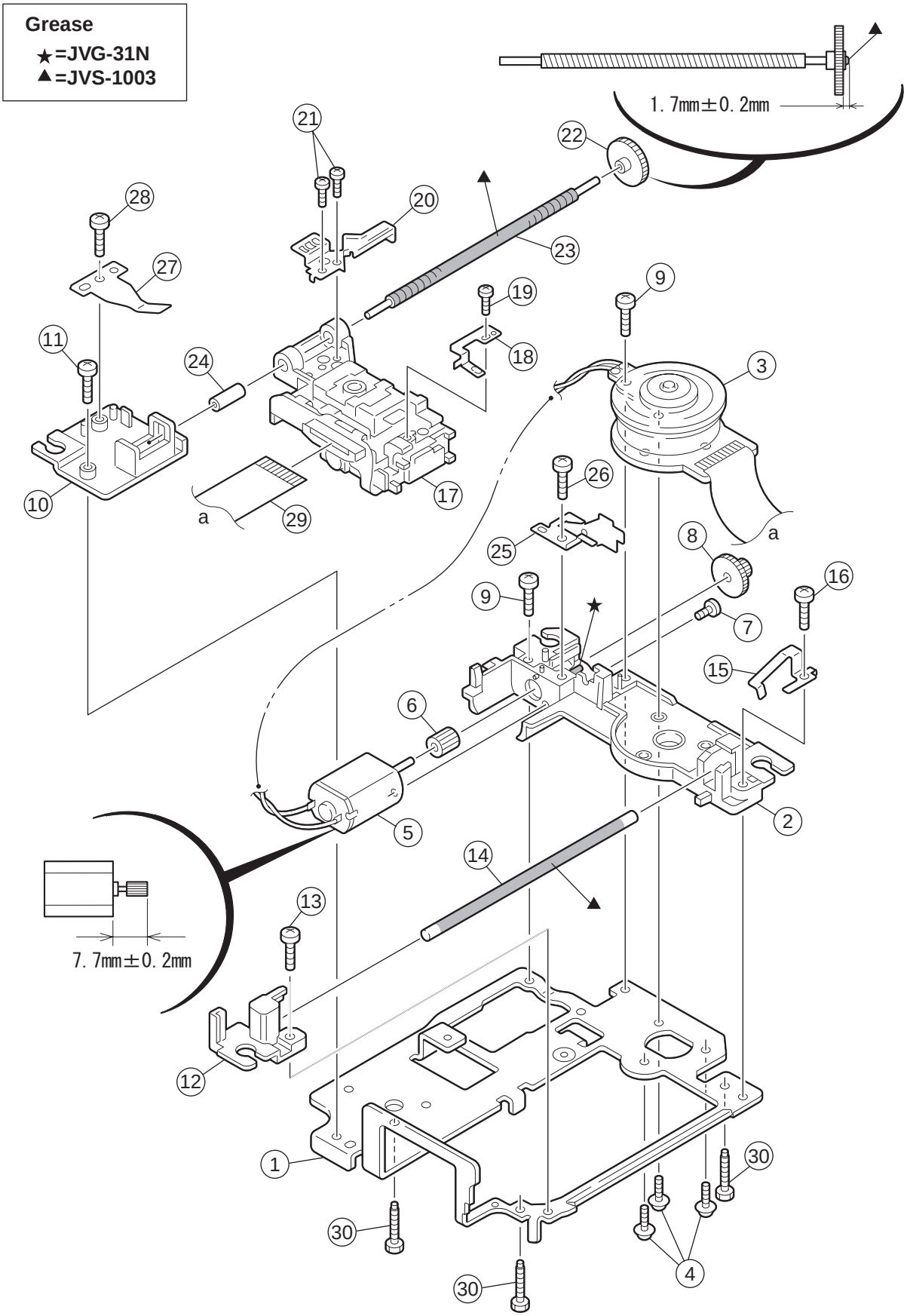

DVD mechanism

Block No. [M][J][M][M]

⚠ Symbol No.	Part No.	Part Name	Description	Local
1	LV10751-001A	TM CHASSIS		
2	LV10752-003A	SF MOTOR BASE		
3	QAR0308-001	SPINDLE MOTOR		
4	LV43461-001A	SPECIAL SCREW	(x3)	
5	QAR0144-003	MOTOR		
6	VKS5557-001	F.M. GEAR		
7	QYSPSPT2030M	SCREW	M2 x 3mm	
8	LV33985-001A	MIDDLE GEAR		
9	QYSDST2008Z	TAP SCREW	M2 x 8mm(x2)	
10	LV33989-001A	S.SHAFT HOLDER		
11	QYSDST2008Z	TAP SCREW	M2 x 8mm	
12	LV33990-001A	G.SHAFT HOLDER		
13	QYSDST2008Z	TAP SCREW	M2 x 8mm	
14	LV43291-002A	GUIDE SHAFT		
15	LV33991-001A	ADJUST SPRING		
16	QYSPST2008Z	TAP SCREW	M2 x 8mm	
17	QAL0507-001	PICK UP		
18	LV33983-001A	PS SPRING		
19	QYSPSFT1730Z	TAP SCREW	M1.7 x 3mm	
20	LV33984-002A	RACK ARM		
21	QYSPSFT1730Z	TAP SCREW	M1.7 x 3mm(x2)	
22	LV33986-001A	S.SHAFT GEAR		
23	LV43293-001A	SCREW SHAFT		
24	LV43290-001A	S.SHAFT COLLOR		
25	LV33987-001A	GEAR HOLDER		
26	QYSPSFT2040Z	TAP SCREW	M2 x 4mm	
27	LV33988-001A	SS ADJ SPRING		
28	QYSDST2008Z	TAP SCREW	M2 x 8mm	
29	LV43702-001A	PICK FFC		
30	LV43292-002A	ADJUST SCREW	(x3)	

DVD changer mechanism assembly and parts list

Block No. M K M M

Grease
★=JVG-31N
▲=JVS-1003

FMU-SD9-1M

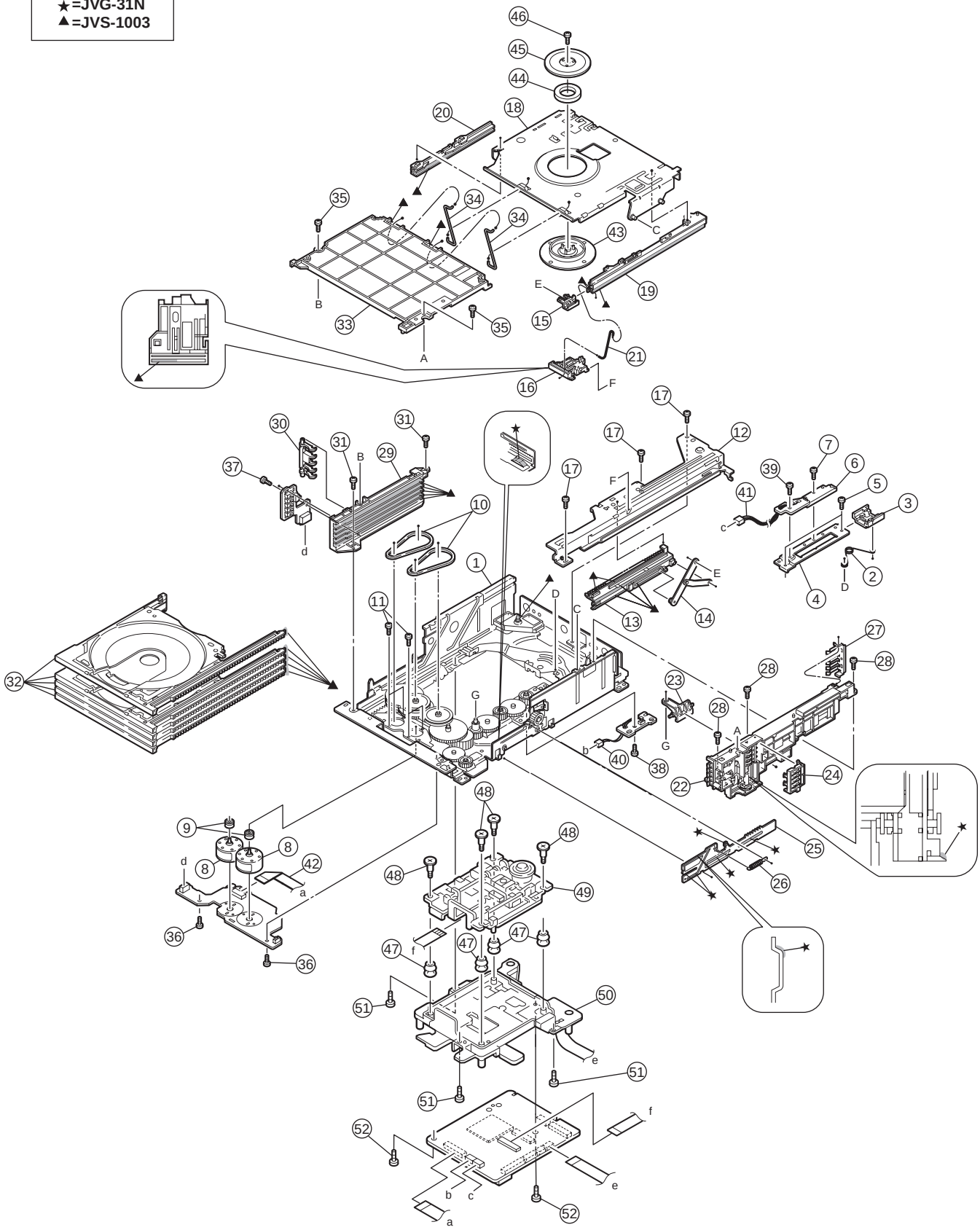

DVD changer mechanism

Block No. [M][K][M][M]

⚠ Symbol No.	Part No.	Part Name	Description	Local
1	LV10743-004A	CHASSIS ASSY		
2	LV43278-001A	SENSOR SPRING		
3	LV33961-002A	SENSOR SLIDER		
4	LV33962-001A	SENSOR BRACKET		
5	QYSDST2605Z	SCREW	2.6mm x 5mm(x2)	
6	QVY0027-B14	S V RESISTOR		
7	QYSDST2004Z	SCREW	2mm x 4mm	
8	QAR0164-001	MOTOR	(x2)	
9	LV42340-001A	MOTOR PULLEY	(x2)	
10	LV41431-002A	BELT	(x2)	
11	QYSPSPU1725N	SCREW	1.7mm x 2.5mm(x4)	
12	LV10744-002A	RACK HOLDER		
13	LV21406-003A	LOADING RACK		
14	LV43279-001A	LIFT ARM ASSY		
15	LV33963-001A	HOOK		
16	LV33964-002A	HOOK STOPPER		
17	QYSDST2605Z	SCREW	2.6mm x 5mm(x3)	
18	LV33965-004A	LIFTER ASSY		
19	LV21408-002A	RAIL(R)		
20	LV21409-002A	RAIL(L)		
21	LV43285-001A	ROD (L)		
22	LV21520-003A	SIDE(R) ASSY		
23	LV33974-001A	SELECT LEVER		
24	LV33975-001A	GEAR COVER		
25	LV33976-001A	ELEVATOR CAM		
26	LV43287-001A	ELEVATOR SPRING		
27	LV33977-002A	CLICK SPRING		
28	QYSDST2605Z	SCREW	2.6mm x 5mm(x3)	
29	LV10749-002A	SIDE(L)		
30	LV33980-001A	OPEN DET.LEVER		
31	QYSDST2605Z	SCREW	2.6mm x 5mm(x2)	
32	LV10746-003A	TRAY ASSY	(x5)	
33	LV10750-002A	TOP COVER		
34	LV43289-002A	ROD	(x2)	
35	QYSDSF2608Z	SCREW	2.6mm x 8mm(x2)	
36	QYSDST2605Z	SCREW	2.6mm x 5mm(x2)	
37	QYSDSF2608Z	SCREW	2.6mm x 8mm	
38	QYSDST2605Z	SCREW	2.6mm x 5mm	
39	QYSDST2004Z	SCREW	2mm x 4mm	
40	WJM0330-002A	E-SI C WIRE C-F		
41	WJM0331-001A	E-SI C WIRE C-F		
42	QUQ110-1508BF	FFC WIRE		
43	LV32417-001A	CLAMPER		
44	LV42930-003A	P.C.MAGNET		
45	LV33992-001A	DVD YOKE		
46	LV41741-001A	SPECIAL SCREW		
47	LV41659-002A	INSULATOR	(x4)	
48	LV43245-001A	SPECIAL SCREW	(x4)	
49	FXL-D52-1M	TRAVERSE MECHANISM		
50	LV10872-001A	DVD TM BASE 3		
51	QYSDST2605Z	SCREW	2.6mm x 5mm(x3)	
52	QYSDSF2606Z	SCREW	2.6mm x 6mm(x2)	

DVD changer mechanism assembly and parts list

Block No. M T M M

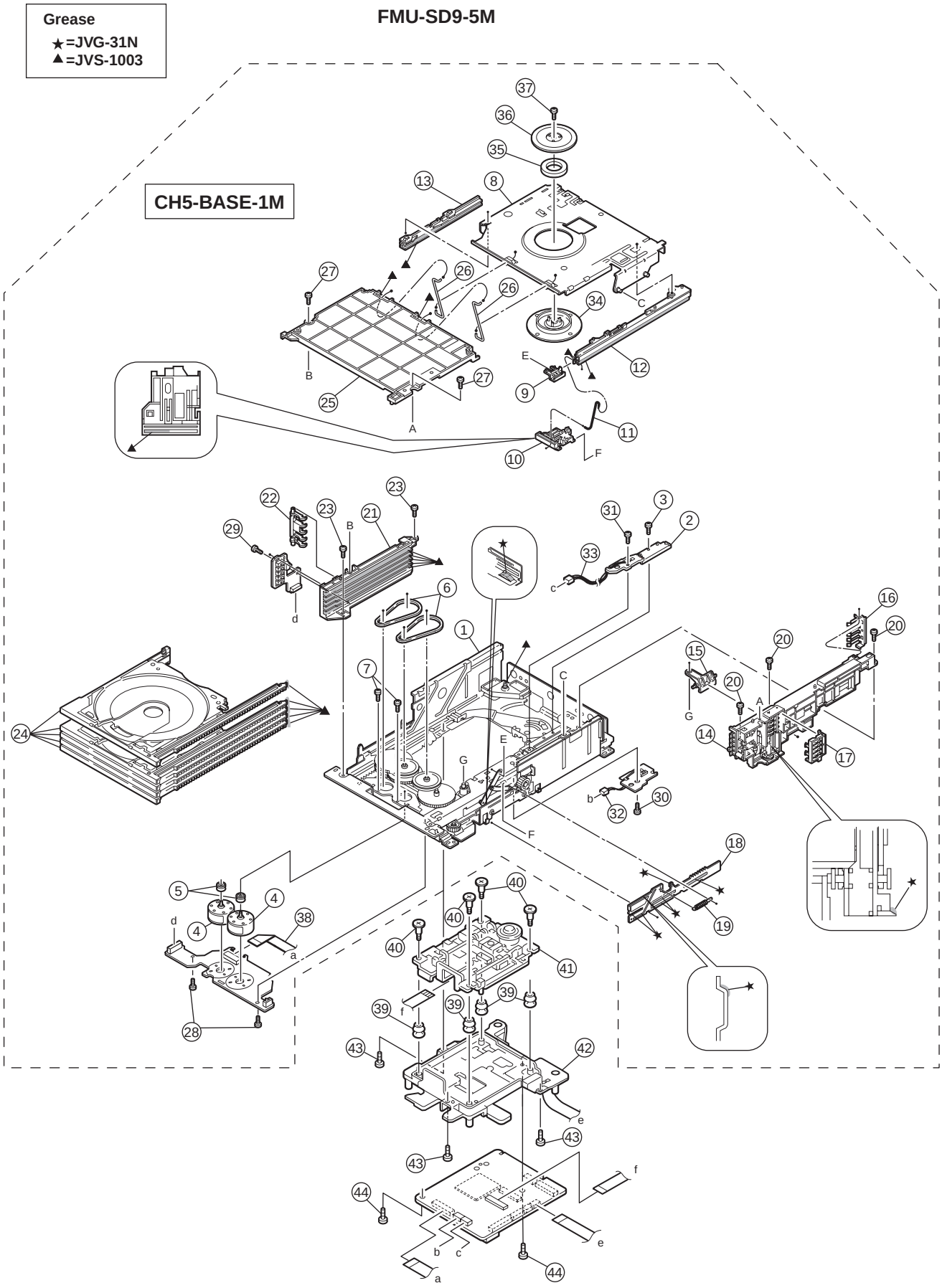

DVD changer mechanism

Block No. [M][T][M][M]

⚠ Symbol No.	Part No.	Part Name	Description	Local
1	LV10913-001A	LOADER ASSY		
2	QVY0027-B14	S V RESISTOR		
3	QYSDST2004Z	SCREW	2mm x 4mm	
4	QAR0164-001	MOTOR	(x2)	
5	LV42340-001A	MOTOR PULLEY	(x2)	
6	LV41431-002A	BELT	(x2)	
7	QYSPSPU1725N	SCREW	1.7mm x 2.5mm(x2)	
8	LV33965-004A	LIFTER ASSY		
9	LV33963-001A	HOOK		
10	LV33964-002A	HOOK STOPPER		
11	LV43285-001A	ROD (L)		
12	LV21408-002A	RAIL(R)		
13	LV21409-002A	RAIL(L)		
14	LV21520-004A	SIDE(R) ASSY		
15	LV33974-001A	SELECT LEVER		
16	LV33977-002A	CLICK SPRING		
17	LV33975-001A	GEAR COVER		
18	LV33976-001A	ELEVATOR CAM		
19	LV43287-001A	ELEVATOR SPRING		
20	QYSDST2605Z	SCREW	2.6mm x 5mm(x3)	
21	LV10749-002A	SIDE(L)		
22	LV33980-001A	OPEN DET.LEVER		
23	QYSDST2605Z	SCREW	2.6mm x 5mm(x2)	
24	LV10746-003A	TRAY ASSY	(x5)	
25	LV10750-003A	TOP COVER		
26	LV43289-002A	ROD	(x2)	
27	QYSDSF2608Z	SCREW	2.6mm x 8mm(x2)	
28	QYSDST2605Z	SCREW	2.6mm x 5mm(x2)	
29	QYSDSF2608Z	SCREW	2.6mm x 8mm	
30	QYSDST2605Z	SCREW	2.6mm x 5mm	
31	QYSDST2004Z	SCREW	2mm x 4mm	
32	WJM0330-002A	E-SI C WIRE C-F		
33	WJM0331-001A	E-SI C WIRE C-F		
34	LV32417-001A	CLAMPER		
35	LV42930-003A	P.C.MAGNET		
36	LV33992-001A	DVD YOKE		
37	LV41741-001A	SPECIAL SCREW		
38	QUQ110-1508BJ	FFC WIRE		
39	LV41659-002A	INSULATOR	(x4)	
40	LV43245-001A	SPECIAL SCREW	(x4)	
41	----------	TRAVERSE MECHANISM		
42	LV10872-002A	DVD TM BASE 3		
43	QYSDST2605Z	SCREW	2.6mm x 5mm(x3)	
44	QYSDSF2606Z	SCREW	2.6mm x 6mm(x2)	

Electrical parts list

Main board

Block No. [0][1][0][0]

⚠ Symbol No.	Part No.	Part Name	Description	Local
IC411	MM1233XF-X	IC		
IC431	MM1623XF-X	IC		
IC471	MN101C49GMY	IC		
IC472	S-80840CNNB-W	IC		
IC473	SN74HCT32NS-X	IC(DIGITAL)		
IC475	RC4580ID-X	IC		
IC476	RC4580ID-X	IC		
IC477	BR24L08F-W-X	IC(DIGITAL)		
IC478	RC4580ID-X	IC		
IC491	KIA7805API	IC		
IC601	RC4580ID-X	IC		
⚠ IC901	STR-G6651	IC		
IC951	PQ05RD21	IC		
IC953	KIA7805API	IC		
Q951	2SC3576-JVC-T	TRANSISTOR		
Q953	KTA1267/YG/-T	TRANSISTOR		
Q954	SI2305DS-X	TRANSISTOR		
Q955	KRC103S-X	DIGITAL TR		
Q958	KTA1271/OY/-T	TRANSISTOR		
Q959	KRC103S-X	DIGITAL TR		
Q960	2SB709A/QR/-X	TRANSISTOR		
Q961	KTC3203/OY/-T	TRANSISTOR		
Q991	2SD601A/QR/-X	TRANSISTOR		
Q4091	KTA1271/OY/-T	TRANSISTOR		
Q4092	KTC3875/YG/-X	SI.TRANSISTOR		
Q4701	KRC111S-X	TRANSISTOR		
Q4702	KRC107S-X	DIGI TRANSISTOR		
Q4703	KRC102S-X	DIGI TRANSISTOR		
Q4801	KTA1504/YG/-X	SI.TRANSISTOR		
Q4802	KRC102S-X	DIGI TRANSISTOR		
Q4811	KRA102S-X	DIGI TRANSISTOR		
Q4812	KRC102S-X	DIGI TRANSISTOR		
Q4821	KRC102S-X	DIGI TRANSISTOR		
Q4831	KRC102S-X	DIGI TRANSISTOR		
Q4832	KRA110S-X	TRANSISTOR		
Q4833	KRC110S-X	DIGI TRANSISTOR		
Q4921	KTC3203/OY/-T	TRANSISTOR		
Q4931	KTA1271/OY/-T	TRANSISTOR		
Q4954	2SA1362/G/-X	TRANSISTOR		
Q4955	KRC102S-X	DIGI TRANSISTOR		
Q4961	KTC3203/OY/-T	TRANSISTOR		
Q4971	2SC3661-X	TRANSISTOR		
Q4972	2SC3661-X	TRANSISTOR		
Q4973	KRA104S-X	DIGI TRANSISTOR		
⚠ D901	DI106	BRIDGE DIODE		
D902	ERA18-04-T1	FR DIODE		
D903	ERA18-04-T1	FR DIODE		
D904	ERA18-04-T1	FR DIODE		
D908	ERA18-04-T1	FR DIODE		
D910	ERA18-04-T1	FR DIODE		
D911	FR104S-T5	FR DIODE		
D950	MTZJ36C-T2	Z DIODE		
D951	FR104S-T5	FR DIODE		
D952	FR104S-T5	FR DIODE		
⚠ D953	SB340-F82	FUSEIODE		
⚠ D954	ERA18-04-T1	FR DIODE		
⚠ D956	FR104S-T5	FR DIODE		
⚠ D957	FR104S-T5	FR DIODE		
D958	1SS133-T2	DIODE		
D960	MTZJ3.6B-T2	Z DIODE		
D970	ER204-F33	FR DIODE		
D991	MTZJ5.1C-T2	Z DIODE		
D4091	1SS133-T2	DIODE		
D4092	MTZJ6.8A-T2	Z DIODE		
D4703	MTZJ4.7B-T2	Z DIODE		
D4704	1SS133-T2	DIODE		
D4705	1SS133-T2	DIODE		
D4706	1SS133-T2	DIODE		
D4707	1SS133-T2	DIODE		
D4708	1SS133-T2	DIODE		
D4709	1SS133-T2	DIODE		
D4811	1SS133-T2	DIODE		
D4831	1SS133-T2	DIODE		
D4832	1SS133-T2	DIODE		
D4833	1SS133-T2	DIODE		
D4834	1SS133-T2	DIODE		
D4835	MTZJ6.8A-T2	Z DIODE		
D4841	MTZJ2.0A-T2	Z DIODE		
D4842	MTZJ3.3A-T2	Z DIODE		
D4891	MTZJ6.2C-T2	Z DIODE		
D4921	MTZJ8.2C-T2	Z DIODE		
D4922	1SS133-T2	DIODE		
D4931	MTZJ8.2C-T2	Z DIODE		
D4932	1SS133-T2	DIODE		
D4961	MTZJ4.7A-T2	Z DIODE		
D4962	1SS133-T2	DIODE		
D4963	1SS133-T2	DIODE		
⚠ PC901	PC123Y22FZ	PHOTO COUPLER		
⚠ PC902	PC123Y22FZ	PHOTO COUPLER		
⚠ C902	QFZ9075-683	MPP CAPACITOR	0.068uF AC275V M	
⚠ C904	QCZ9079-102	C CAPACITOR	1000pF AC250V M	
⚠ C905	QCZ9079-102	C CAPACITOR	1000pF AC250V M	
⚠ C907	QETM2DM-157	E CAPACITOR	150uF 200V M	
C908	QCZ0136-332Z	C CAPACITOR	3300pF 1kV K	
C909	QCZ0136-101Z	C CAPACITOR	100pF 1kV K	
C910	QCBB1HK-221Y	C CAPACITOR	220pF 50V K	
C913	QCZ0136-101Z	C CAPACITOR	100pF 1kV K	
C914	QEZ0532-396Z	E CAPACITOR	39uF 25V M	
C915	QCBB1HK-471Y	C CAPACITOR	470pF 50V K	
⚠ C916	QCZ9079-222	C CAPACITOR	2200pF AC250V M	
C918	QCFB1HZ-104Y	C CAPACITOR	0.1uF 50V Z	
C951	NDC31HJ-101X	C CAPACITOR	100pF 50V J	
C952	QCZ0136-101Z	C CAPACITOR	100pF 1kV K	
C953	NDC31HJ-101X	C CAPACITOR	100pF 50V J	
C954	NDC31HJ-101X	C CAPACITOR	100pF 50V J	
C956	NDC31HJ-101X	C CAPACITOR	100pF 50V J	
C957	NDC31HJ-101X	C CAPACITOR	100pF 50V J	
C960	QEZ0529-826Z	E CAPACITOR	82uF 10V M	
C961	QCZ0202-155Z	C CAPACITOR	1.5uF 25V Z	
C962	QEKC1HM-226Z	E CAPACITOR	22uF 50V M	
C963	QEZ0533-396Z	E CAPACITOR	39uF 50V M	
C964	QETN1HM-226Z	E CAPACITOR	22uF 50V M	
C965	QEZ0528-108	E CAPACITOR	1000uF 10V M	
C966	QETN1AM-477Z	E CAPACITOR	470uF 10V M	
C967	NCB31CK-104X	C CAPACITOR	0.1uF 16V K	
C968	NCB31CK-104X	C CAPACITOR	0.1uF 16V K	
C969	QETN1AM-227Z	E CAPACITOR	220uF 10V M	
C976	NCB31CK-104X	C CAPACITOR	0.1uF 16V K	
C977	NCB31CK-104X	C CAPACITOR	0.1uF 16V K	
C978	QEKC1AM-107Z	E CAPACITOR	100uF 10V M	
C979	QEZ0530-827	E CAPACITOR	820uF 16V M	
C980	QEKC1HM-106Z	E CAPACITOR	10uF 50V M	
C981	QCZ0202-155Z	C CAPACITOR	1.5uF 25V Z	
C982	QEZ0531-567	E CAPACITOR	560uF 25V M	
C984	QEKC1CM-227Z	E CAPACITOR	220uF 16V M	
C985	QETN1EM-107Z	E CAPACITOR	100uF 25V M	
C986	QETN1EM-107Z	E CAPACITOR	100uF 25V M	
C987	QEZ0532-187Z	E CAPACITOR	180uF 25V M	
C989	QEKC1CM-107Z	E CAPACITOR	100uF 16V M	
C992	QETN1HM-474Z	E CAPACITOR	0.47uF 50V M	
C993	NDC31HJ-101X	C CAPACITOR	100pF 50V J	
C994	QCBB1HK-223Y	C CAPACITOR	0.022uF 50V K	
C997	QETN1CM-227Z	E CAPACITOR	220uF 16V M	
C4006	QCZ0202-155Z	C CAPACITOR	1.5uF 25V Z	
C4007	NCB31CK-104X	C CAPACITOR	0.1uF 16V K	
C4011	NCB31HK-822X	C CAPACITOR	8200pF 50V K	
C4012	NCB31HK-822X	C CAPACITOR	8200pF 50V K	
C4091	QETN1CM-226Z	E CAPACITOR	22uF 16V M	
C4092	QETN1CM-107Z	E CAPACITOR	100uF 16V M	
C4101	NCB30JK-105X	C CAPACITOR	1uF 6.3V K	
C4102	NDC31HJ-470X	C CAPACITOR	47pF 50V J	
C4111	QFN31HJ-103Z	M CAPACITOR	0.01uF 50V J	

⚠ Symbol No.	Part No.	Part Name	Description	Local
C4112	NDC31HJ-470X	C CAPACITOR	47pF 50V J	
C4121	NCB30JK-105X	C CAPACITOR	1uF 6.3V K	
C4122	NDC31HJ-470X	C CAPACITOR	47pF 50V J	
C4171	NCB30JK-105X	C CAPACITOR	1uF 6.3V K	
C4172	NCB30JK-105X	C CAPACITOR	1uF 6.3V K	
C4173	NCB30JK-105X	C CAPACITOR	1uF 6.3V K	
C4191	QETN1VM-476Z	E CAPACITOR	47uF 35V M	
C4192	NCB31HK-103X	C CAPACITOR	0.01uF 50V K	
C4301	QETN1VM-476Z	E CAPACITOR	47uF 35V M	
C4311	NCB31HK-103X	C CAPACITOR	0.01uF 50V K	
C4321	NCB30JK-105X	C CAPACITOR	1uF 6.3V K	
C4331	NCB30JK-105X	C CAPACITOR	1uF 6.3V K	
C4341	NCB30JK-105X	C CAPACITOR	1uF 6.3V K	
C4351	NCB30JK-105X	C CAPACITOR	1uF 6.3V K	
C4391	QETN1AM-477Z	E CAPACITOR	470uF 10V M	
C4392	NCB31CK-104X	C CAPACITOR	0.1uF 16V K	
C4394	NCB31CK-104X	C CAPACITOR	0.1uF 16V K	
C4395	QETN1CM-226Z	E CAPACITOR	22uF 16V M	
C4401	QETN0JM-477Z	E CAPACITOR	470uF 6.3V M	
C4402	NDC31HJ-470X	C CAPACITOR	47pF 50V J	
C4411	NCB31HK-103X	C CAPACITOR	0.01uF 50V K	
C4412	NDC31HJ-470X	C CAPACITOR	47pF 50V J	
C4421	QETN0JM-477Z	E CAPACITOR	470uF 6.3V M	
C4423	NDC31HJ-470X	C CAPACITOR	47pF 50V J	
C4431	QETN0JM-477Z	E CAPACITOR	470uF 6.3V M	
C4432	NCS31HJ-470X	C CAPACITOR	47pF 50V J	
C4441	QETN0JM-477Z	E CAPACITOR	470uF 6.3V M	
C4442	NDC31HJ-470X	C CAPACITOR	47pF 50V J	
C4451	QETN0JM-477Z	E CAPACITOR	470uF 6.3V M	
C4452	NDC31HJ-470X	C CAPACITOR	47pF 50V J	
C4605	NCS31HJ-471X	C CAPACITOR	470pF 50V J	
C4606	NCS31HJ-471X	C CAPACITOR	470pF 50V J	
C4702	QETN0JM-227Z	E CAPACITOR	220uF 6.3V M	
C4703	QETN1HM-225Z	E CAPACITOR	2.2uF 50V M	
C4704	NCB31CK-223X	C CAPACITOR	0.022uF 16V K	
C4705	NCB31HK-103X	C CAPACITOR	0.01uF 50V K	
C4706	NCB31HK-103X	C CAPACITOR	0.01uF 50V K	
C4707	QETN1CM-107Z	E CAPACITOR	100uF 16V M	
C4708	NCB31HK-103X	C CAPACITOR	0.01uF 50V K	
C4709	NCB31HK-103X	C CAPACITOR	0.01uF 50V K	
C4710	NCB31HK-103X	C CAPACITOR	0.01uF 50V K	
C4711	QETN1HM-106Z	E CAPACITOR	10uF 50V M	
C4712	NCB31CK-104X	C CAPACITOR	0.1uF 16V K	
C4713	NCB31CK-104X	C CAPACITOR	0.1uF 16V K	
C4714	NCB31CK-104X	C CAPACITOR	0.1uF 16V K	
C4715	NCB31CK-104X	C CAPACITOR	0.1uF 16V K	
C4718	NCB31HK-103X	C CAPACITOR	0.01uF 50V K	
C4719	NCB31HK-103X	C CAPACITOR	0.01uF 50V K	
C4720	NCB31CK-104X	C CAPACITOR	0.1uF 16V K	
C4721	NCB31CK-104X	C CAPACITOR	0.1uF 16V K	
C4771	NCB31CK-104X	C CAPACITOR	0.1uF 16V K	
C4772	NCB31CK-104X	C CAPACITOR	0.1uF 16V K	
C4773	NCB31CK-104X	C CAPACITOR	0.1uF 16V K	
C4774	NCB31CK-104X	C CAPACITOR	0.1uF 16V K	
C4791	NCB31CK-104X	C CAPACITOR	0.1uF 16V K	
C4801	QETN1HM-224Z	E CAPACITOR	0.22uF 50V M	
C4891	NCB31HK-221X	C CAPACITOR	220pF 50V K	
C4892	NCB31HK-221X	C CAPACITOR	220pF 50V K	
C4901	QETN1CM-107Z	E CAPACITOR	100uF 16V M	
C4902	NCB31HK-103X	C CAPACITOR	0.01uF 50V K	
C4903	QETN1CM-107Z	E CAPACITOR	100uF 16V M	
C4904	NCB31HK-103X	C CAPACITOR	0.01uF 50V K	
C4921	QETN1VM-476Z	E CAPACITOR	47uF 35V M	
C4922	QETN1CM-107Z	E CAPACITOR	100uF 16V M	
C4931	QETN1VM-476Z	E CAPACITOR	47uF 35V M	
C4932	QETN1CM-107Z	E CAPACITOR	100uF 16V M	
C4961	QETN1CM-107Z	E CAPACITOR	100uF 16V M	
C6001	NCB31CK-223X	C CAPACITOR	0.022uF 16V K	
C6002	NCB31CK-223X	C CAPACITOR	0.022uF 16V K	
C6003	NCB31CK-104X	C CAPACITOR	0.1uF 16V K	
C6004	NCB31HK-103X	C CAPACITOR	0.01uF 50V K	
C6101	QETN1HM-475Z	E CAPACITOR	4.7uF 50V M	
C6102	NCS31HJ-101X	C CAPACITOR	100pF 50V J	
C6103	QETN1HM-476Z	E CAPACITOR	47uF 50V M	
C6104	NCB31CK-104X	C CAPACITOR	0.1uF 16V K	
C6105	NCB31HK-103X	C CAPACITOR	0.01uF 50V K	
C6201	QETN1HM-475Z	E CAPACITOR	4.7uF 50V M	
C6202	NCS31HJ-101X	C CAPACITOR	100pF 50V J	

⚠ Symbol No.	Part No.	Part Name	Description	Local
C6203	QETN1HM-476Z	E CAPACITOR	47uF 50V M	
C6204	NCB31CK-104X	C CAPACITOR	0.1uF 16V K	
C6205	NCB31HK-103X	C CAPACITOR	0.01uF 50V K	
C6501	QETN1HM-475Z	E CAPACITOR	4.7uF 50V M	
C6502	NCS31HJ-560X	C CAPACITOR	56pF 50V J	
C6503	QETN1HM-475Z	E CAPACITOR	4.7uF 50V M	
C6511	QETN1HM-475Z	E CAPACITOR	4.7uF 50V M	
C6512	NCS31HJ-560X	C CAPACITOR	56pF 50V J	
C6513	QETN1HM-475Z	E CAPACITOR	4.7uF 50V M	
C6514	NCB31CK-104X	C CAPACITOR	0.1uF 16V K	
C6515	NCB31CK-104X	C CAPACITOR	0.1uF 16V K	
C6516	NCS31HJ-560X	C CAPACITOR	56pF 50V J	
C6517	NCS31HJ-471X	C CAPACITOR	470pF 50V J	
C6518	NCS31HJ-471X	C CAPACITOR	470pF 50V J	
C6601	QETN1HM-475Z	E CAPACITOR	4.7uF 50V M	
C6602	NCS31HJ-560X	C CAPACITOR	56pF 50V J	
C6603	QETN1HM-475Z	E CAPACITOR	4.7uF 50V M	
C6611	QETN1HM-475Z	E CAPACITOR	4.7uF 50V M	
C6612	NCS31HJ-560X	C CAPACITOR	56pF 50V J	
C6613	QETN1HM-475Z	E CAPACITOR	4.7uF 50V M	
C6614	NCB31CK-104X	C CAPACITOR	0.1uF 16V K	
C6615	NCB31CK-104X	C CAPACITOR	0.1uF 16V K	
C6616	NCS31HJ-560X	C CAPACITOR	56pF 50V J	
C6617	NCS31HJ-471X	C CAPACITOR	470pF 50V J	
C6618	NCS31HJ-471X	C CAPACITOR	470pF 50V J	
C6901	QETN1VM-476Z	E CAPACITOR	47uF 35V M	
C6902	QETN1VM-476Z	E CAPACITOR	47uF 35V M	
R901	QRL01DJ-683X	OMF RESISTOR	68kΩ 1W J	
R903	QRE141J-270Y	C RESISTOR	27Ω 1/4W J	
R904	QRE141J-222Y	C RESISTOR	2.2kΩ 1/4W J	
R905	QRL027J-683	OMF RESISTOR	68kΩ 2W J	
R906	QRJ146J-681X	UNF C RESISTOR	680Ω 1/4W J	
R907	QRT027J-R47	MF RESISTOR	0.47Ω 2W J	
R908	QRE141J-332Y	C RESISTOR	3.3kΩ 1/4W J	
R910	QRE141J-754Y	C RESISTOR	750kΩ 1/4W J	
R911	QRE141J-754Y	C RESISTOR	750kΩ 1/4W J	
⚠ R921	QRZ9037-335	COMP RESISTOR	3.3MΩ 1/2W K	
R951	QRE141J-150Y	C RESISTOR	15Ω 1/4W J	
R952	NRSA63J-103X	MG RESISTOR	10kΩ 1/16W J	
R953	NRSA02J-223X	MG RESISTOR	22kΩ 1/10W J	
⚠ R954	QRZ9005-100X	FUSI RESISTOR	10Ω	
R955	NRSA63J-223X	MG RESISTOR	22kΩ 1/16W J	
R960	NRSA63J-101X	MG RESISTOR	100Ω 1/16W J	
R961	NRSA63J-681X	MG RESISTOR	680Ω 1/16W J	
R963	NRSA63J-101X	MG RESISTOR	100Ω 1/16W J	
R964	NRSA63J-105X	MG RESISTOR	1MΩ 1/16W J	
R965	NRSA63J-103X	MG RESISTOR	10kΩ 1/16W J	
R966	NRSA63J-221X	MG RESISTOR	220Ω 1/16W J	
R969	NRSA63J-221X	MG RESISTOR	220Ω 1/16W J	
R977	NRSA63J-102X	MG RESISTOR	1kΩ 1/16W J	
R980	NRSA63J-272X	MG RESISTOR	2.7kΩ 1/16W J	
R981	NRSA63J-223X	MG RESISTOR	22kΩ 1/16W J	
R983	NRSA63J-102X	MG RESISTOR	1kΩ 1/16W J	
R984	NRSA63J-222X	MG RESISTOR	2.2kΩ 1/16W J	
R985	NRSA02J-132X	MG RESISTOR	1.3kΩ 1/10W J	
R986	NRSA02J-152X	MG RESISTOR	1.5kΩ 1/10W J	
R987	NRSA02J-152X	MG RESISTOR	1.5kΩ 1/10W J	
R988	NRSA63J-222X	MG RESISTOR	2.2kΩ 1/16W J	
R989	NRSA63J-333X	MG RESISTOR	33kΩ 1/16W J	
R990	NRSA63J-333X	MG RESISTOR	33kΩ 1/16W J	
R4011	NRSA63J-102X	MG RESISTOR	1kΩ 1/16W J	
R4012	NRSA63J-102X	MG RESISTOR	1kΩ 1/16W J	
R4013	NRSA63J-682X	MG RESISTOR	6.8kΩ 1/16W J	
R4014	NRSA63J-682X	MG RESISTOR	6.8kΩ 1/16W J	
R4091	NRSA63J-472X	MG RESISTOR	4.7kΩ 1/16W J	
R4092	NRSA63J-103X	MG RESISTOR	10kΩ 1/16W J	
R4093	NRSA63J-821X	MG RESISTOR	820Ω 1/16W J	
R4101	NRSA63J-750X	MG RESISTOR	75Ω 1/16W J	
R4111	NRSA63J-750X	MG RESISTOR	75Ω 1/16W J	
R4121	NRSA63J-750X	MG RESISTOR	75Ω 1/16W J	
R4191	NRSA63J-0R0X	MG RESISTOR	0Ω 1/16W J	
R4201	NRSA63J-681X	MG RESISTOR	680Ω 1/16W J	
R4202	NRSA63J-221X	MG RESISTOR	220Ω 1/16W J	
R4211	NRSA63J-681X	MG RESISTOR	680Ω 1/16W J	
R4212	NRSA63J-221X	MG RESISTOR	220Ω 1/16W J	
R4231	NRSA63J-681X	MG RESISTOR	680Ω 1/16W J	
R4232	NRSA63J-221X	MG RESISTOR	220Ω 1/16W J	

⚠ Symbol No.	Part No.	Part Name	Description	Local
R4241	NRSA63J-361X	MG RESISTOR	360Ω 1/16W J	
R4242	NRSA63J-101X	MG RESISTOR	100Ω 1/16W J	
R4251	NRSA63J-361X	MG RESISTOR	360Ω 1/16W J	
R4252	NRSA63J-101X	MG RESISTOR	100Ω 1/16W J	
R4401	NRSA63J-750X	MG RESISTOR	75Ω 1/16W J	
R4411	NRSA63J-750X	MG RESISTOR	75Ω 1/16W J	
R4421	NRSA63J-750X	MG RESISTOR	75Ω 1/16W J	
R4431	NRSA63J-750X	MG RESISTOR	75Ω 1/16W J	
R4441	NRSA63J-750X	MG RESISTOR	75Ω 1/16W J	
R4451	NRSA63J-750X	MG RESISTOR	75Ω 1/16W J	
R4605	NRSA63J-101X	MG RESISTOR	100Ω 1/16W J	
R4606	NRSA63J-101X	MG RESISTOR	100Ω 1/16W J	
R4703	NRSA63J-102X	MG RESISTOR	1kΩ 1/16W J	
R4704	NRSA63J-103X	MG RESISTOR	10kΩ 1/16W J	
R4705	NRSA63J-472X	MG RESISTOR	4.7kΩ 1/16W J	
R4706	NRSA63J-223X	MG RESISTOR	22kΩ 1/16W J	
R4707	NRSA63J-103X	MG RESISTOR	10kΩ 1/16W J	
R4708	QRE141J-221Y	C RESISTOR	220Ω 1/4W J	
R4709	NRSA63J-101X	MG RESISTOR	100Ω 1/16W J	
R4710	NRSA63J-104X	MG RESISTOR	100kΩ 1/16W J	
R4711	NRSA63J-331X	MG RESISTOR	330Ω 1/16W J	
R4712	NRSA63J-331X	MG RESISTOR	330Ω 1/16W J	
R4713	NRSA63J-331X	MG RESISTOR	330Ω 1/16W J	
R4752	NRSA63J-273X	MG RESISTOR	27kΩ 1/16W J	
R4753	NRSA63J-103X	MG RESISTOR	10kΩ 1/16W J	
R4754	NRSA63J-103X	MG RESISTOR	10kΩ 1/16W J	
R4755	NRSA63J-103X	MG RESISTOR	10kΩ 1/16W J	
R4756	NRSA63J-103X	MG RESISTOR	10kΩ 1/16W J	
R4757	NRSA63J-103X	MG RESISTOR	10kΩ 1/16W J	
R4758	NRSA63J-103X	MG RESISTOR	10kΩ 1/16W J	
R4760	NRSA63J-222X	MG RESISTOR	2.2kΩ 1/16W J	
R4761	NRSA63J-103X	MG RESISTOR	10kΩ 1/16W J	
R4762	NRSA63J-103X	MG RESISTOR	10kΩ 1/16W J	
R4772	NRSA63J-103X	MG RESISTOR	10kΩ 1/16W J	
R4773	NRSA63J-103X	MG RESISTOR	10kΩ 1/16W J	
R4774	NRSA63J-103X	MG RESISTOR	10kΩ 1/16W J	
R4775	NRSA63J-331X	MG RESISTOR	330Ω 1/16W J	
R4776	NRSA63J-331X	MG RESISTOR	330Ω 1/16W J	
R4777	NRSA63J-101X	MG RESISTOR	100Ω 1/16W J	
R4778	NRSA63J-101X	MG RESISTOR	100Ω 1/16W J	
R4781	NRSA63J-101X	MG RESISTOR	100Ω 1/16W J	
R4782	NRSA63J-101X	MG RESISTOR	100Ω 1/16W J	
R4783	QRE141J-151Y	C RESISTOR	150Ω 1/4W J	
R4784	QRE141J-151Y	C RESISTOR	150Ω 1/4W J	
R4785	QRE141J-151Y	C RESISTOR	150Ω 1/4W J	
R4786	QRE141J-151Y	C RESISTOR	150Ω 1/4W J	
R4791	NRSA02J-221X	MG RESISTOR	220Ω 1/10W J	
R4801	NRSA63J-223X	MG RESISTOR	22kΩ 1/16W J	
R4802	NRSA63J-223X	MG RESISTOR	22kΩ 1/16W J	
⚠ R4811	QRZ9006-4R7X	F.RESISTOR	4.7Ω 1/4W J	
R4821	QRE141J-181Y	C RESISTOR	180Ω 1/4W J	
R4822	QRE141J-151Y	C RESISTOR	150Ω 1/4W J	
R4831	NRSA63J-153X	MG RESISTOR	15kΩ 1/16W J	
R4832	NRSA63J-223X	MG RESISTOR	22kΩ 1/16W J	
R4833	NRSA63J-123X	MG RESISTOR	12kΩ 1/16W J	
R4834	NRSA63J-393X	MG RESISTOR	39kΩ 1/16W J	
R4835	NRSA63J-472X	MG RESISTOR	4.7kΩ 1/16W J	
R4841	NRSA63J-681X	MG RESISTOR	680Ω 1/16W J	
R4842	NRSA63J-103X	MG RESISTOR	10kΩ 1/16W J	
R4843	QRT017J-2R2	MF RESISTOR	2.2Ω 1W J	
R4844	NRSA63J-103X	MG RESISTOR	10kΩ 1/16W J	
R4845	NRSA63J-222X	MG RESISTOR	2.2kΩ 1/16W J	
R4861	NRSA63J-222X	MG RESISTOR	2.2kΩ 1/16W J	
R4863	NRSA63J-222X	MG RESISTOR	2.2kΩ 1/16W J	
R4864	NRSA63J-222X	MG RESISTOR	2.2kΩ 1/16W J	
R4866	NRSA63J-272X	MG RESISTOR	2.7kΩ 1/16W J	
R4871	NRSA63J-331X	MG RESISTOR	330Ω 1/16W J	
R4872	NRSA63J-331X	MG RESISTOR	330Ω 1/16W J	
R4873	NRSA63J-331X	MG RESISTOR	330Ω 1/16W J	
R4874	NRSA63J-331X	MG RESISTOR	330Ω 1/16W J	
R4875	NRSA63J-331X	MG RESISTOR	330Ω 1/16W J	
R4876	NRSA63J-331X	MG RESISTOR	330Ω 1/16W J	
R4881	NRSA63J-472X	MG RESISTOR	4.7kΩ 1/16W J	
R4883	NRSA63J-472X	MG RESISTOR	4.7kΩ 1/16W J	
R4884	NRSA63J-472X	MG RESISTOR	4.7kΩ 1/16W J	
R4886	NRSA63J-562X	MG RESISTOR	5.6kΩ 1/16W J	
R4891	NRSA63J-221X	MG RESISTOR	220Ω 1/16W J	
R4892	NRSA63J-221X	MG RESISTOR	220Ω 1/16W J	

⚠ Symbol No.	Part No.	Part Name	Description	Local
⚠ R4921	QRZ9005-100X	FUSI RESISTOR	10Ω	
R4922	NRSA63J-222X	MG RESISTOR	2.2kΩ 1/16W J	
⚠ R4931	QRZ9005-100X	FUSI RESISTOR	10Ω	
R4932	NRSA63J-222X	MG RESISTOR	2.2kΩ 1/16W J	
R4961	QRE141J-271Y	C RESISTOR	270Ω 1/4W J	
R4971	NRSA63J-222X	MG RESISTOR	2.2kΩ 1/16W J	
R4972	NRSA63J-224X	MG RESISTOR	220kΩ 1/16W J	
R4973	NRSA63J-102X	MG RESISTOR	1kΩ 1/16W J	
R4974	NRSA63J-184X	MG RESISTOR	180kΩ 1/16W J	
R4975	NRSA63J-184X	MG RESISTOR	180kΩ 1/16W J	
R4997	NRSA63J-0R0X	MG RESISTOR	0Ω 1/16W J	
R4998	NRSA63J-0R0X	MG RESISTOR	0Ω 1/16W J	
R6001	NRSA63J-102X	MG RESISTOR	1kΩ 1/16W J	
R6101	NRSA63J-223X	MG RESISTOR	22kΩ 1/16W J	
R6102	NRSA63J-222X	MG RESISTOR	2.2kΩ 1/16W J	
R6103	NRSA63J-333X	MG RESISTOR	33kΩ 1/16W J	
R6105	NRSA63J-473X	MG RESISTOR	47kΩ 1/16W J	
R6106	QRE141J-330Y	C RESISTOR	33Ω 1/4W J	
R6107	QRE141J-390Y	C RESISTOR	39Ω 1/4W J	
R6201	NRSA63J-223X	MG RESISTOR	22kΩ 1/16W J	
R6202	NRSA63J-222X	MG RESISTOR	2.2kΩ 1/16W J	
R6203	NRSA63J-333X	MG RESISTOR	33kΩ 1/16W J	
R6205	NRSA63J-473X	MG RESISTOR	47kΩ 1/16W J	
R6206	QRE141J-330Y	C RESISTOR	33Ω 1/4W J	
R6207	QRE141J-390Y	C RESISTOR	39Ω 1/4W J	
R6302	QRE141J-271Y	C RESISTOR	270Ω 1/4W J	
R6303	QRE141J-271Y	C RESISTOR	270Ω 1/4W J	
R6304	QRE141J-271Y	C RESISTOR	270Ω 1/4W J	
R6305	QRE141J-271Y	C RESISTOR	270Ω 1/4W J	
R6501	NRSA63J-104X	MG RESISTOR	100kΩ 1/16W J	
R6502	NRSA63J-103X	MG RESISTOR	10kΩ 1/16W J	
R6503	NRSA63J-102X	MG RESISTOR	1kΩ 1/16W J	
R6504	NRSA63J-102X	MG RESISTOR	1kΩ 1/16W J	
R6505	NRSA63J-103X	MG RESISTOR	10kΩ 1/16W J	
R6506	NRSA63J-103X	MG RESISTOR	10kΩ 1/16W J	
R6507	NRSA63J-103X	MG RESISTOR	10kΩ 1/16W J	
R6508	NRSA63J-102X	MG RESISTOR	1kΩ 1/16W J	
R6509	NRSA63J-473X	MG RESISTOR	47kΩ 1/16W J	
R6510	NRSA63J-104X	MG RESISTOR	100kΩ 1/16W J	
R6511	NRSA63J-333X	MG RESISTOR	33kΩ 1/16W J	
R6512	NRSA63J-103X	MG RESISTOR	10kΩ 1/16W J	
R6513	NRSA63J-104X	MG RESISTOR	100kΩ 1/16W J	
R6514	NRSA63J-103X	MG RESISTOR	10kΩ 1/16W J	
R6515	NRSA63J-102X	MG RESISTOR	1kΩ 1/16W J	
R6516	NRSA63J-103X	MG RESISTOR	10kΩ 1/16W J	
R6517	NRSA63J-104X	MG RESISTOR	100kΩ 1/16W J	
R6518	NRSA63J-223X	MG RESISTOR	22kΩ 1/16W J	
R6601	NRSA63J-104X	MG RESISTOR	100kΩ 1/16W J	
R6602	NRSA63J-103X	MG RESISTOR	10kΩ 1/16W J	
R6603	NRSA63J-102X	MG RESISTOR	1kΩ 1/16W J	
R6604	NRSA63J-102X	MG RESISTOR	1kΩ 1/16W J	
R6605	NRSA63J-103X	MG RESISTOR	10kΩ 1/16W J	
R6606	NRSA63J-103X	MG RESISTOR	10kΩ 1/16W J	
R6607	NRSA63J-103X	MG RESISTOR	10kΩ 1/16W J	
R6608	NRSA63J-102X	MG RESISTOR	1kΩ 1/16W J	
R6609	NRSA63J-473X	MG RESISTOR	47kΩ 1/16W J	
R6610	NRSA63J-104X	MG RESISTOR	100kΩ 1/16W J	
R6611	NRSA63J-333X	MG RESISTOR	33kΩ 1/16W J	
R6612	NRSA63J-103X	MG RESISTOR	10kΩ 1/16W J	
R6613	NRSA63J-104X	MG RESISTOR	100kΩ 1/16W J	
R6614	NRSA63J-103X	MG RESISTOR	10kΩ 1/16W J	
R6615	NRSA63J-102X	MG RESISTOR	1kΩ 1/16W J	
R6616	NRSA63J-103X	MG RESISTOR	10kΩ 1/16W J	
R6617	NRSA63J-104X	MG RESISTOR	100kΩ 1/16W J	
R6618	NRSA63J-223X	MG RESISTOR	22kΩ 1/16W J	
⚠ L901	QQR1105-001	LINE FILTER		
L951	QQL244K-R22Z	COIL	0.22uH K	
L952	QQL44BK-220Z	COIL	22uH K	
L955	QQL26AK-220Z	COIL	22uH K	
L957	QQL244K-100Z	COIL	10uH K	
L959	QQL244K-100Z	COIL	10uH K	
L4391	QQL25CK-221Z	COIL	220uH K	
⚠ T901	QQS0097-001	SW TRANSF		
CN401	QGF1036C1-10	CONNECTOR	FFC/FPC (1-10)	
CN402	QGF1036C1-08	CONNECTOR	FFC/FPC (1-8)	
CN403	QGF1036C1-28	CONNECTOR	FFC/FPC (1-28)	

⚠ Symbol No.	Part No.	Part Name	Description	Local
CN404	QGD2504C1-05Z	CONNECTOR	(1-5)	
CN405	QGD2504C1-05Z	CONNECTOR	(1-5)	
CN406	QGD2504C1-04Z	CONNECTOR	(1-4)	
CN407	QGD2504C1-05Z	CONNECTOR	(1-5)	
CN410	QGF1205C1-11	CONNECTOR	FFC/FPC (1-11)	
CN411	QGF1036C1-31	CONNECTOR	FFC/FPC (1-31)	
CN412	QGF1036C1-07	CONNECTOR	FFC/FPC (1-7)	
CN450	QGF1036C1-19	CONNECTOR	FFC/FPC (1-19)	
CN456	QGD2504C1-03Z	CONNECTOR	(1-3)	
CN457	QGD2504C1-03Z	CONNECTOR	(1-3)	
CN460	QGF1205C1-05	CONNECTOR	FFC/FPC (1-5)	
CN701	QGF1205F1-05	CONNECTOR	FFC/FPC (1-5)	
⚠ CP471	ICP-N5-T	IC PROTECTOR	250mA	
⚠ CP951	ICP-N10-T	IC PROTECTOR	400mA	
⚠ CP952	ICP-N5-T	IC PROTECTOR	250mA	
EP401	QNZ0136-001Z	EARTH PLATE		
EP402	QNZ0136-001Z	EARTH PLATE		
EP403	QNZ0136-001Z	EARTH PLATE		
EP901	QNZ0136-001Z	EARTH PLATE		
EP902	QNZ0136-001Z	EARTH PLATE		
FC901	QNG0003-001Z	FUSE CLIP		
FC902	QNG0003-001Z	FUSE CLIP		
FW901	QUM219-06DGZ4	PARA RIBON WIR		
FW902	QUM21A-06DGZ4	PARA RIBON WIR		
HS901	E70306-002	HEAT SINK		
J4401	QNN0570-001	PIN JACK		
J4402	QNN0572-001	PIN JACK		
J4891	QNS0089-001	3.5 JACK		
J6001	QNS0170-001	HEADPHONE JACK		
K902	QQR0621-001Z	COIL		
K4702	QQR0621-001Z	COIL		
K6001	NQR0007-002X	FERRITE BEADS		
K6002	NQR0007-002X	FERRITE BEADS		
K6003	NQR0007-002X	FERRITE BEADS		
K6004	NQR0007-002X	FERRITE BEADS		
⚠ P901	QNC0082-001	AC INLET		
PP401	QZW0112-001	WIRE CLAMP		
X4701	QAX0246-001Z	C RESONATOR	8.00MHz	

Front board

Block No. [0][2][0][0]

⚠ Symbol No.	Part No.	Part Name	Description	Local
IC501	MN101C35DKW	IC(MPU)		
IC511	GP1UM271XK	IR DETECT UNIT	38kHz	
Q501	KRC102S-X	DIGI TRANSISTOR		
Q502	KRC102S-X	DIGI TRANSISTOR		
Q503	KRC102S-X	DIGI TRANSISTOR		
Q551	KRC102S-X	DIGI TRANSISTOR		
Q552	KRC111S-X	TRANSISTOR		
D511	SLR-343VC-T	LED		
D551	SELU2E10C-P	LED		
C501	NCB31HK-471X	C CAPACITOR	470pF 50V K	
C502	NCB31HK-471X	C CAPACITOR	470pF 50V K	
C503	NCB31HK-103X	C CAPACITOR	0.01uF 50V K	
C504	NCB31HK-103X	C CAPACITOR	0.01uF 50V K	
C505	QEKC0JM-107Z	E CAPACITOR	100uF 6.3V M	
C506	NCB31HK-103X	C CAPACITOR	0.01uF 50V K	
C507	NCB31HK-103X	C CAPACITOR	0.01uF 50V K	
C511	NCB21CK-105X	C CAPACITOR	1uF 16V K	
C541	NCB31HK-103X	C CAPACITOR	0.01uF 50V K	
C542	NCB31HK-103X	C CAPACITOR	0.01uF 50V K	
C551	NCB31HK-103X	C CAPACITOR	0.01uF 50V K	
R501	NRSA63J-102X	MG RESISTOR	1kΩ 1/16W J	
R502	NRSA63J-102X	MG RESISTOR	1kΩ 1/16W J	
R503	NRSA63J-102X	MG RESISTOR	1kΩ 1/16W J	
R504	NRSA63J-102X	MG RESISTOR	1kΩ 1/16W J	
R511	NRSA63J-221X	MG RESISTOR	220Ω 1/16W J	
R521	NRSA63J-332X	MG RESISTOR	3.3kΩ 1/16W J	
R522	NRSA63J-392X	MG RESISTOR	3.9kΩ 1/16W J	
R526	NRSA63J-332X	MG RESISTOR	3.3kΩ 1/16W J	
R527	NRSA63J-392X	MG RESISTOR	3.9kΩ 1/16W J	
R528	NRSA63J-682X	MG RESISTOR	6.8kΩ 1/16W J	
R531	NRSA63J-332X	MG RESISTOR	3.3kΩ 1/16W J	
R532	NRSA63J-392X	MG RESISTOR	3.9kΩ 1/16W J	
R533	NRSA63J-682X	MG RESISTOR	6.8kΩ 1/16W J	
R534	NRSA63J-153X	MG RESISTOR	15kΩ 1/16W J	
R536	NRSA63J-332X	MG RESISTOR	3.3kΩ 1/16W J	
R537	NRSA63J-392X	MG RESISTOR	3.9kΩ 1/16W J	
R538	NRSA63J-682X	MG RESISTOR	6.8kΩ 1/16W J	
R539	NRSA63J-153X	MG RESISTOR	15kΩ 1/16W J	
R541	NRSA63J-103X	MG RESISTOR	10kΩ 1/16W J	
R542	NRSA63J-103X	MG RESISTOR	10kΩ 1/16W J	
R551	NRSA63J-104X	MG RESISTOR	100kΩ 1/16W J	
R552	NRSA63J-221X	MG RESISTOR	220Ω 1/16W J	
R553	NRSA63J-331X	MG RESISTOR	330Ω 1/16W J	
BK501	LV43659-001A	FL HOLDER		
BK502	LV43659-001A	FL HOLDER		
CN501	QGF1016F2-19W	CONNECTOR	FFC/FPC (1-19)	
CN551	QGF1036C1-04	CONNECTOR	FFC/FPC (1-4)	
CN561	QGF1005F1-04	CONNECTOR	FFC/FPC (1-4)	
DI501	QLF0131-002	FL TUBE		
FW502	QUM214-08Z3Z3	PARA RIBON WIR		
FW521	QUM213-12DGZ4	PARA RIBON WIRE		
FW561	QUM213-16DGZ3	PARA RIBON WIRE		
JS541	QSW1059-001	JOG VOLUME		
S521	QSW0683-001Z	PUSH SW		
S522	QSW0683-001Z	PUSH SW		
S523	QSW0683-001Z	PUSH SW		
S526	QSW0683-001Z	PUSH SW		
S527	QSW0683-001Z	PUSH SW		
S528	QSW0683-001Z	PUSH SW		
S529	QSW0683-001Z	PUSH SW		
S531	QSW0683-001Z	PUSH SW		
S532	QSW0683-001Z	PUSH SW		
S533	QSW0683-001Z	PUSH SW		
S534	QSW0683-001Z	PUSH SW		
S535	QSW0683-001Z	PUSH SW		
S536	QSW0683-001Z	PUSH SW		
S537	QSW0683-001Z	PUSH SW		
S538	QSW0683-001Z	PUSH SW		
S539	QSW0683-001Z	PUSH SW		
S540	QSW0683-001Z	PUSH SW		
X501	NAX0623-001X	C RESONATOR		

Audio board

Block No. [0][3][0][0]

⚠ Symbol No.	Part No.	Part Name	Description	Local
IC151	CD4066BM-X	IC		
IC152	CD4066BM-X	IC		
IC153	BD3814FV-X	IC		
IC158	RC4580ID-X	IC		
IC159	RC4580ID-X	IC		
IC160	RC4580ID-X	IC		
IC509	GP1FA352RZ	OPT RECEIVER		
IC531	RC4580ID-X	IC		
IC581	RC4580ID-X	IC		
IC591	RC4580ID-X	IC		
Q1131	IMX9-W	TRANSISTOR		
Q1133	IMX9-W	TRANSISTOR		
Q1135	IMX9-W	TRANSISTOR		
Q1137	2SC3661-X	TRANSISTOR		
Q1251	KRA104S-X	DIGI TRANSISTOR		
Q1252	KRA104S-X	DIGI TRANSISTOR		
C1001	QETN1EM-107Z	E CAPACITOR	100uF 25V M	
C1002	QETN1EM-107Z	E CAPACITOR	100uF 25V M	
C1003	NCB31HK-103X	C CAPACITOR	0.01uF 50V K	
C1101	NCS31HJ-331X	C CAPACITOR	330pF 50V J	

⚠ Symbol No.	Part No.	Part Name	Description	Local
C1102	NCS31HJ-331X	C CAPACITOR	330pF 50V J	
C1103	NCB31CK-104X	C CAPACITOR	0.1uF 16V K	
C1120	NCB31CK-104X	C CAPACITOR	0.1uF 16V K	
C1121	NCB31CK-104X	C CAPACITOR	0.1uF 16V K	
C1122	NCB31CK-104X	C CAPACITOR	0.1uF 16V K	
C1123	NCB31CK-104X	C CAPACITOR	0.1uF 16V K	
C1124	NCB31HK-472X	C CAPACITOR	4700pF 50V K	
C1125	NCB31HK-472X	C CAPACITOR	4700pF 50V K	
C1141	QETN1EM-107Z	E CAPACITOR	100uF 25V M	
C1142	QETN1EM-107Z	E CAPACITOR	100uF 25V M	
C1143	NCB31CK-104X	C CAPACITOR	0.1uF 16V K	
C1144	NCB31CK-104X	C CAPACITOR	0.1uF 16V K	
C1145	NCB31CK-104X	C CAPACITOR	0.1uF 16V K	
C1176	NCB31HK-103X	C CAPACITOR	0.01uF 50V K	
C1177	NCB31HK-103X	C CAPACITOR	0.01uF 50V K	
C1178	NCB31HK-103X	C CAPACITOR	0.01uF 50V K	
C1179	NCB31HK-103X	C CAPACITOR	0.01uF 50V K	
C1180	NCB31HK-103X	C CAPACITOR	0.01uF 50V K	
C1181	NCB31HK-103X	C CAPACITOR	0.01uF 50V K	
C1183	QETN1HM-475Z	E CAPACITOR	4.7uF 50V M	
C1201	QETN1CM-476Z	E CAPACITOR	47uF 16V M	
C1202	QETN1CM-476Z	E CAPACITOR	47uF 16V M	
C1203	QETN1CM-476Z	E CAPACITOR	47uF 16V M	
C1204	QETN1CM-476Z	E CAPACITOR	47uF 16V M	
C1205	QETN1HM-475Z	E CAPACITOR	4.7uF 50V M	
C1206	QETN1HM-475Z	E CAPACITOR	4.7uF 50V M	
C1207	QETN1HM-475Z	E CAPACITOR	4.7uF 50V M	
C1208	QETN1HM-475Z	E CAPACITOR	4.7uF 50V M	
C1209	QETN1HM-475Z	E CAPACITOR	4.7uF 50V M	
C1210	QETN1HM-475Z	E CAPACITOR	4.7uF 50V M	
C1211	QETN1HM-475Z	E CAPACITOR	4.7uF 50V M	
C1212	QETN1HM-475Z	E CAPACITOR	4.7uF 50V M	
C1213	QETN1HM-475Z	E CAPACITOR	4.7uF 50V M	
C1214	QETN1HM-475Z	E CAPACITOR	4.7uF 50V M	
C1215	QETN1HM-475Z	E CAPACITOR	4.7uF 50V M	
C1216	QETN1HM-475Z	E CAPACITOR	4.7uF 50V M	
C1217	QETN1HM-475Z	E CAPACITOR	4.7uF 50V M	
C1218	QETN1HM-475Z	E CAPACITOR	4.7uF 50V M	
C1221	NCS31HJ-470X	C CAPACITOR	47pF 50V J	
C1222	NCS31HJ-470X	C CAPACITOR	47pF 50V J	
C1223	NCS31HJ-470X	C CAPACITOR	47pF 50V J	
C1224	NCS31HJ-470X	C CAPACITOR	47pF 50V J	
C1225	NCS31HJ-471X	C CAPACITOR	470pF 50V J	
C1226	NCS31HJ-470X	C CAPACITOR	47pF 50V J	
C1227	NCB31CK-183X	C CAPACITOR	0.018uF 16V K	
C1228	NCB31CK-183X	C CAPACITOR	0.018uF 16V K	
C1230	QETN1HM-475Z	E CAPACITOR	4.7uF 50V M	
C1251	NCB31HK-103X	C CAPACITOR	0.01uF 50V K	
C1252	NCB31HK-103X	C CAPACITOR	0.01uF 50V K	
C1253	NCB31HK-103X	C CAPACITOR	0.01uF 50V K	
C1254	NCB31HK-103X	C CAPACITOR	0.01uF 50V K	
C2503	QETN1HM-475Z	E CAPACITOR	4.7uF 50V M	
C2504	QETN1HM-475Z	E CAPACITOR	4.7uF 50V M	
C2525	NCB31HK-102X	C CAPACITOR	1000pF 50V K	
C2526	NCB31HK-102X	C CAPACITOR	1000pF 50V K	
C2527	NCB31HK-102X	C CAPACITOR	1000pF 50V K	
C2528	NCB31HK-102X	C CAPACITOR	1000pF 50V K	
C2531	NCB31HK-331X	C CAPACITOR	330pF 50V K	
C2532	NCB31HK-331X	C CAPACITOR	330pF 50V K	
C2533	QETN1CM-476Z	E CAPACITOR	47uF 16V M	
C2534	QETN1CM-476Z	E CAPACITOR	47uF 16V M	
C2539	NCB31CK-104X	C CAPACITOR	0.1uF 16V K	
C2540	NCB31CK-104X	C CAPACITOR	0.1uF 16V K	
C2541	QETN1HM-475Z	E CAPACITOR	4.7uF 50V M	
C2542	QETN1HM-475Z	E CAPACITOR	4.7uF 50V M	
C2561	QETN1HM-105Z	E CAPACITOR	1uF 50V M	
C2562	QETN1HM-105Z	E CAPACITOR	1uF 50V M	
C2563	NCB31HK-271X	C CAPACITOR	270pF 50V K	
C2564	NCB31HK-271X	C CAPACITOR	270pF 50V K	
C2575	NCB31HK-102X	C CAPACITOR	1000pF 50V K	
C2576	NCB31HK-102X	C CAPACITOR	1000pF 50V K	
C2577	QETN1HM-475Z	E CAPACITOR	4.7uF 50V M	
C2578	QETN1HM-475Z	E CAPACITOR	4.7uF 50V M	
C2581	QETN1HM-105Z	E CAPACITOR	1uF 50V M	
C2582	QETN1HM-106Z	E CAPACITOR	10uF 50V M	
C2583	NCB31HK-271X	C CAPACITOR	270pF 50V K	
C2584	NCS31HJ-560X	C CAPACITOR	56pF 50V J	
C2585	NCB31HK-102X	C CAPACITOR	1000pF 50V K	

⚠ Symbol No.	Part No.	Part Name	Description	Local
C2589	NCB31CK-104X	C CAPACITOR	0.1uF 16V K	
C2590	NCB31CK-104X	C CAPACITOR	0.1uF 16V K	
C2592	NCB31HK-472X	C CAPACITOR	4700pF 50V K	
C2594	NCB31CK-223X	C CAPACITOR	0.022uF 16V K	
C2597	QETN1HM-475Z	E CAPACITOR	4.7uF 50V M	
C2599	NCB31CK-104X	C CAPACITOR	0.1uF 16V K	
C2600	NCB31CK-104X	C CAPACITOR	0.1uF 16V K	
C2603	QETN1HM-475Z	E CAPACITOR	4.7uF 50V M	
C2604	QETN1HM-475Z	E CAPACITOR	4.7uF 50V M	
C2605	NCS31HJ-560X	C CAPACITOR	56pF 50V J	
R1101	NRSA63J-471X	MG RESISTOR	470Ω 1/16W J	
R1102	NRSA63J-471X	MG RESISTOR	470Ω 1/16W J	
R1103	NRSA63J-564X	MG RESISTOR	560kΩ 1/16W J	
R1104	NRSA63J-564X	MG RESISTOR	560kΩ 1/16W J	
R1106	NRSA63J-101X	MG RESISTOR	100Ω 1/16W J	
R1107	NRSA63J-0R0X	MG RESISTOR	0Ω 1/16W J	
R1108	NRSA63J-334X	MG RESISTOR	330kΩ 1/16W J	
R1109	NRSA63J-334X	MG RESISTOR	330kΩ 1/16W J	
R1110	NRSA63J-223X	MG RESISTOR	22kΩ 1/16W J	
R1120	NRSA63J-472X	MG RESISTOR	4.7kΩ 1/16W J	
R1121	NRSA63J-472X	MG RESISTOR	4.7kΩ 1/16W J	
R1122	NRSA63J-102X	MG RESISTOR	1kΩ 1/16W J	
R1123	NRSA63J-102X	MG RESISTOR	1kΩ 1/16W J	
R1124	NRSA63J-472X	MG RESISTOR	4.7kΩ 1/16W J	
R1131	NRSA63J-104X	MG RESISTOR	100kΩ 1/16W J	
R1132	NRSA63J-104X	MG RESISTOR	100kΩ 1/16W J	
R1133	NRSA63J-101X	MG RESISTOR	100Ω 1/16W J	
R1134	NRSA63J-101X	MG RESISTOR	100Ω 1/16W J	
R1135	NRSA63J-332X	MG RESISTOR	3.3kΩ 1/16W J	
R1136	NRSA63J-332X	MG RESISTOR	3.3kΩ 1/16W J	
R1137	NRSA63J-104X	MG RESISTOR	100kΩ 1/16W J	
R1138	NRSA63J-104X	MG RESISTOR	100kΩ 1/16W J	
R1139	NRSA63J-104X	MG RESISTOR	100kΩ 1/16W J	
R1140	NRSA63J-104X	MG RESISTOR	100kΩ 1/16W J	
R1141	NRSA63J-102X	MG RESISTOR	1kΩ 1/16W J	
R1142	NRSA63J-102X	MG RESISTOR	1kΩ 1/16W J	
R1143	NRSA63J-332X	MG RESISTOR	3.3kΩ 1/16W J	
R1144	NRSA63J-332X	MG RESISTOR	3.3kΩ 1/16W J	
R1145	NRSA63J-104X	MG RESISTOR	100kΩ 1/16W J	
R1146	NRSA63J-104X	MG RESISTOR	100kΩ 1/16W J	
R1147	NRSA63J-104X	MG RESISTOR	100kΩ 1/16W J	
R1148	NRSA63J-104X	MG RESISTOR	100kΩ 1/16W J	
R1149	NRSA63J-471X	MG RESISTOR	470Ω 1/16W J	
R1150	NRSA63J-102X	MG RESISTOR	1kΩ 1/16W J	
R1151	NRSA63J-472X	MG RESISTOR	4.7kΩ 1/16W J	
R1152	NRSA63J-332X	MG RESISTOR	3.3kΩ 1/16W J	
R1153	NRSA63J-471X	MG RESISTOR	470Ω 1/16W J	
R1154	NRSA63J-472X	MG RESISTOR	4.7kΩ 1/16W J	
R1155	NRSA63J-104X	MG RESISTOR	100kΩ 1/16W J	
R1156	NRSA63J-104X	MG RESISTOR	100kΩ 1/16W J	
R1157	NRSA63J-332X	MG RESISTOR	3.3kΩ 1/16W J	
R1158	NRSA63J-104X	MG RESISTOR	100kΩ 1/16W J	
R1161	NRSA63J-104X	MG RESISTOR	100kΩ 1/16W J	
R1162	NRSA63J-104X	MG RESISTOR	100kΩ 1/16W J	
R1163	NRSA63J-104X	MG RESISTOR	100kΩ 1/16W J	
R1164	NRSA63J-104X	MG RESISTOR	100kΩ 1/16W J	
R1165	NRSA63J-104X	MG RESISTOR	100kΩ 1/16W J	
R1166	NRSA63J-104X	MG RESISTOR	100kΩ 1/16W J	
R1167	NRSA63J-332X	MG RESISTOR	3.3kΩ 1/16W J	
R1168	NRSA63J-332X	MG RESISTOR	3.3kΩ 1/16W J	
R1169	NRSA63J-393X	MG RESISTOR	39kΩ 1/16W J	
R1170	NRSA63J-393X	MG RESISTOR	39kΩ 1/16W J	
R1171	NRSA63J-332X	MG RESISTOR	3.3kΩ 1/16W J	
R1172	NRSA63J-332X	MG RESISTOR	3.3kΩ 1/16W J	
R1173	NRSA63J-473X	MG RESISTOR	47kΩ 1/16W J	
R1174	NRSA63J-473X	MG RESISTOR	47kΩ 1/16W J	
R1175	NRSA63J-432X	MG RESISTOR	4.3kΩ 1/16W J	
R1176	NRSA63J-393X	MG RESISTOR	39kΩ 1/16W J	
R1197	NRSA63J-474X	MG RESISTOR	470kΩ 1/16W J	
R1201	NRSA63J-124X	MG RESISTOR	120kΩ 1/16W J	
R1202	NRSA63J-124X	MG RESISTOR	120kΩ 1/16W J	
R1251	NRSA63J-223X	MG RESISTOR	22kΩ 1/16W J	
R1252	NRSA63J-223X	MG RESISTOR	22kΩ 1/16W J	
R1253	NRSA63J-223X	MG RESISTOR	22kΩ 1/16W J	
R1254	NRSA63J-223X	MG RESISTOR	22kΩ 1/16W J	
R2525	NRSA63J-102X	MG RESISTOR	1kΩ 1/16W J	
R2526	NRSA63J-102X	MG RESISTOR	1kΩ 1/16W J	

⚠ Symbol No.	Part No.	Part Name	Description	Local
R2531	NRSA63J-102X	MG RESISTOR	1kΩ 1/16W J	
R2532	NRSA63J-102X	MG RESISTOR	1kΩ 1/16W J	
R2533	NRSA63J-472X	MG RESISTOR	4.7kΩ 1/16W J	
R2534	NRSA63J-472X	MG RESISTOR	4.7kΩ 1/16W J	
R2537	NRSA63J-104X	MG RESISTOR	100kΩ 1/16W J	
R2538	NRSA63J-104X	MG RESISTOR	100kΩ 1/16W J	
R2539	NRSA63J-272X	MG RESISTOR	2.7kΩ 1/16W J	
R2540	NRSA63J-272X	MG RESISTOR	2.7kΩ 1/16W J	
R2551	NRSA63J-104X	MG RESISTOR	100kΩ 1/16W J	
R2552	NRSA63J-104X	MG RESISTOR	100kΩ 1/16W J	
R2553	NRSA63J-102X	MG RESISTOR	1kΩ 1/16W J	
R2554	NRSA63J-102X	MG RESISTOR	1kΩ 1/16W J	
R2560	NRSA63J-472X	MG RESISTOR	4.7kΩ 1/16W J	
R2561	NRSA63J-273X	MG RESISTOR	27kΩ 1/16W J	
R2562	NRSA63J-102X	MG RESISTOR	1kΩ 1/16W J	
R2563	NRSA63J-103X	MG RESISTOR	10kΩ 1/16W J	
R2564	NRSA63J-103X	MG RESISTOR	10kΩ 1/16W J	
R2565	NRSA63J-682X	MG RESISTOR	6.8kΩ 1/16W J	
R2566	NRSA63J-682X	MG RESISTOR	6.8kΩ 1/16W J	
R2567	NRSA63J-102X	MG RESISTOR	1kΩ 1/16W J	
R2568	NRSA63J-102X	MG RESISTOR	1kΩ 1/16W J	
R2581	NRSA63J-104X	MG RESISTOR	100kΩ 1/16W J	
R2582	NRSA63J-104X	MG RESISTOR	100kΩ 1/16W J	
R2583	NRSA63J-103X	MG RESISTOR	10kΩ 1/16W J	
R2584	NRSA63J-333X	MG RESISTOR	33kΩ 1/16W J	
R2585	NRSA63J-682X	MG RESISTOR	6.8kΩ 1/16W J	
R2586	NRSA63J-123X	MG RESISTOR	12kΩ 1/16W J	
R2587	NRSA63J-102X	MG RESISTOR	1kΩ 1/16W J	
R2588	NRSA63J-102X	MG RESISTOR	1kΩ 1/16W J	
R2590	NRSA63J-333X	MG RESISTOR	33kΩ 1/16W J	
R2592	NRSA63J-333X	MG RESISTOR	33kΩ 1/16W J	
R2594	NRSA63J-333X	MG RESISTOR	33kΩ 1/16W J	
R2596	NRSA63J-102X	MG RESISTOR	1kΩ 1/16W J	
R2599	NRSA63J-102X	MG RESISTOR	1kΩ 1/16W J	
CN441	QGF1036C1-31	CONNECTOR	FFC/FPC (1-31)	
CN442	QGF1036C1-07	CONNECTOR	FFC/FPC (1-7)	
EP101	QNZ0136-001Z	EARTH PLATE		
J1101	QNN0598-001	PIN JACK		
J1103	QND0118-001	DIN CONNECTOR		
K1101	NQR0007-002X	FERRITE BEADS		

Mother board

Block No. [0][4][0][0]

⚠ Symbol No.	Part No.	Part Name	Description	Local
⚠ IC201	STK413-430	IC		
⚠ IC202	STK413-400	IC		
IC301	RC4558D-X	IC		
IC302	RC4558D-X	IC		
IC303	RC4558D-X	IC		
IC601	MN101C427NB	IC		
IC602	S-80840CNNB-W	IC		
Q151	KTD863/Y/-T	TRANSISTOR		
Q152	KTC3203/OY/-T	TRANSISTOR		
Q501	UN2113-X	TRANSISTOR		
Q502	UN2211-X	TRANSISTOR		
Q503	KTC3875/YG/-X	SI.TRANSISTOR		
Q504	KTA1504/YG/-X	SI.TRANSISTOR		
Q505	UN2211-X	TRANSISTOR		
Q517	UN2213-X	DIGI TRANSISTOR		
Q523	KTC3875/YG/-X	SI.TRANSISTOR		
Q524	KTA1504/YG/-X	SI.TRANSISTOR		
Q525	KTC3875/YG/-X	SI.TRANSISTOR		
Q542	KTC3875/YG/-X	SI.TRANSISTOR		
Q603	KTC3875/YG/-X	SI.TRANSISTOR		
Q604	KTC3265/Y/-X	TRANSISTOR		
Q2101	KTA1504/YG/-X	SI.TRANSISTOR		
Q2201	KTA1504/YG/-X	SI.TRANSISTOR		
Q2301	KTA1504/YG/-X	SI.TRANSISTOR		
Q2401	KTA1504/YG/-X	SI.TRANSISTOR		
Q2501	KTA1504/YG/-X	SI.TRANSISTOR		
Q2601	KTA1504/YG/-X	SI.TRANSISTOR		
Q2701	KTC3875/YG/-X	SI.TRANSISTOR		
Q2702	KTA1046/Y/	TRANSISTOR		
Q2703	UN2211-X	TRANSISTOR		
Q3101	KTC3875/YG/-X	SI.TRANSISTOR		
Q3102	KTC3875/YG/-X	SI.TRANSISTOR		
Q3201	KTC3875/YG/-X	SI.TRANSISTOR		
Q3202	KTC3875/YG/-X	SI.TRANSISTOR		
Q3301	KTC3875/YG/-X	SI.TRANSISTOR		
Q3302	KTC3875/YG/-X	SI.TRANSISTOR		
Q3401	KTC3875/YG/-X	SI.TRANSISTOR		
Q3402	KTC3875/YG/-X	SI.TRANSISTOR		
Q3501	KTC3875/YG/-X	SI.TRANSISTOR		
Q3502	KTC3875/YG/-X	SI.TRANSISTOR		
Q3701	UN2111-X	TRANSISTOR		
Q3702	UN2111-X	TRANSISTOR		
Q3703	UN2212-X	TRANSISTOR		
Q3704	KTC2026/Y/	TRANSISTOR		
Q3705	KTC3875/YG/-X	SI.TRANSISTOR		
Q3706	UN2213-X	DIGI TRANSISTOR		
D101	1SS133-T2	DIODE		
⚠ D151	GBU803	BRIDGE DIODE		
⚠ D152	GBU803	BRIDGE DIODE		
D153	1SS133-T2	DIODE		
D154	1SS133-T2	DIODE		
D161	1SS133-T2	DIODE		
D162	MTZJ13C-T2	Z DIODE		
D163	1SS133-T2	DIODE		
D164	MTZJ6.2A-T2	Z DIODE		
D165	MTZJ6.8C-T2	Z DIODE		
D166	MTZJ6.8C-T2	Z DIODE		
D501	1SS133-T2	DIODE		
D502	1SS133-T2	DIODE		
D503	1SS133-T2	DIODE		
D504	1SS133-T2	DIODE		
D505	MTZJ5.1C-T2	Z DIODE		
D506	1SS133-T2	DIODE		
D507	1SS133-T2	DIODE		
D509	1SS133-T2	DIODE		
D510	1SS133-T2	DIODE		
D514	1SS133-T2	DIODE		
D518	MTZJ15C-T2	Z DIODE		
D519	1SS133-T2	DIODE		
D520	1SS133-T2	DIODE		
D521	MTZJ6.8C-T2	Z DIODE		
D535	1SS133-T2	DIODE		
D541	1SS133-T2	DIODE		
D542	1SS133-T2	DIODE		
D543	1SS133-T2	DIODE		
D544	1SS133-T2	DIODE		
D545	1SS133-T2	DIODE		
D546	1SS133-T2	DIODE		
D548	1SS133-T2	DIODE		
D549	1SS133-T2	DIODE		
D550	1SS133-T2	DIODE		
D551	1SS133-T2	DIODE		
D552	1SS133-T2	DIODE		
D553	1SS133-T2	DIODE		
D561	SLR-342MC-T12	LED		
D601	1SS133-T2	DIODE		
D610	1SS133-T2	DIODE		
D611	1SS133-T2	DIODE		
D2101	1SS133-T2	DIODE		
D2201	1SS133-T2	DIODE		
D2301	1SS133-T2	DIODE		
D2401	1SS133-T2	DIODE		
D2501	1SS133-T2	DIODE		
D2601	1SS133-T2	DIODE		
D2701	MTZJ13C-T2	Z DIODE		
D2702	MTZJ13C-T2	Z DIODE		
D2703	MTZJ16C-T2	Z DIODE		
D3101	1SS133-T2	DIODE		
D3102	1SS133-T2	DIODE		
D3201	1SS133-T2	DIODE		
D3202	1SS133-T2	DIODE		
D3301	1SS133-T2	DIODE		
D3302	1SS133-T2	DIODE		

⚠ Symbol No.	Part No.	Part Name	Description	Local
D3401	1SS133-T2	DIODE		
D3402	1SS133-T2	DIODE		
D3501	1SS133-T2	DIODE		
D3502	1SS133-T2	DIODE		
D3601	1SS133-T2	DIODE		
D3602	1SS133-T2	DIODE		
D3703	MTZJ11C-T2	Z DIODE		
D3706	1SS133-T2	DIODE		
D3707	1SS133-T2	DIODE		
D3708	1SS133-T2	DIODE		
⚠ C101	QCZ9105-472	C CAPACITOR	4700pF 250V M	
C151	NCF21HZ-104X	C CAPACITOR	0.1uF 50V Z	
C152	NCF21HZ-104X	C CAPACITOR	0.1uF 50V Z	
C153	NCF21HZ-104X	C CAPACITOR	0.1uF 50V Z	
C154	NCF21HZ-104X	C CAPACITOR	0.1uF 50V Z	
C155	NCF21HZ-104X	C CAPACITOR	0.1uF 50V Z	
C156	NCF21HZ-104X	C CAPACITOR	0.1uF 50V Z	
C157	NCF21HZ-104X	C CAPACITOR	0.1uF 50V Z	
C158	NCF21HZ-104X	C CAPACITOR	0.1uF 50V Z	
C159	NCF21HZ-104X	C CAPACITOR	0.1uF 50V Z	
C161	QETM1HM-338	E CAPACITOR	3300uF 50V M	
C162	QETM1HM-338	E CAPACITOR	3300uF 50V M	
C163	QETM1EM-478	E CAPACITOR	4700uF 25V M	
C164	QETM1EM-478	E CAPACITOR	4700uF 25V M	
C165	QETN1EM-476Z	E CAPACITOR	47uF 25V M	
C166	QETN1EM-107Z	E CAPACITOR	100uF 25V M	
C167	QETN1EM-476Z	E CAPACITOR	47uF 25V M	
C168	QETN1CM-107Z	E CAPACITOR	100uF 16V M	
C171	QETN1CM-107Z	E CAPACITOR	100uF 16V M	
C172	QETN1CM-107Z	E CAPACITOR	100uF 16V M	
C501	QETN1HM-475Z	E CAPACITOR	4.7uF 50V M	
C502	NCF31HZ-103X	C CAPACITOR	0.01uF 50V Z	
C503	QETN1HM-475Z	E CAPACITOR	4.7uF 50V M	
C512	QETN1HM-475Z	E CAPACITOR	4.7uF 50V M	
C522	QETN1HM-106Z	E CAPACITOR	10uF 50V M	
C523	QETN1EM-476Z	E CAPACITOR	47uF 25V M	
C591	NCF31HZ-103X	C CAPACITOR	0.01uF 50V Z	
C601	QETN1CM-107Z	E CAPACITOR	100uF 16V M	
C602	NCB31HK-102X	C CAPACITOR	1000pF 50V K	
C603	NCF31HZ-103X	C CAPACITOR	0.01uF 50V Z	
C604	NCF31HZ-103X	C CAPACITOR	0.01uF 50V Z	
C605	NCF31HZ-103X	C CAPACITOR	0.01uF 50V Z	
C606	QETN1HM-106Z	E CAPACITOR	10uF 50V M	
C2102	NCB31CK-473X	C CAPACITOR	0.047uF 16V K	
C2103	QETN1HM-475Z	E CAPACITOR	4.7uF 50V M	
C2104	QETN1CM-107Z	E CAPACITOR	100uF 16V M	
C2105	NDC31HJ-101X	C CAPACITOR	100pF 50V J	
C2106	NDC31HJ-3R0X	C CAPACITOR	3pF 50V J	
C2107	NCB21HK-104X	C CAPACITOR	0.1uF 50V K	
C2108	NCB21HK-104X	C CAPACITOR	0.1uF 50V K	
C2202	NCB31HK-471X	C CAPACITOR	470pF 50V K	
C2203	QETN1HM-475Z	E CAPACITOR	4.7uF 50V M	
C2204	QETN1CM-107Z	E CAPACITOR	100uF 16V M	
C2205	NDC31HJ-101X	C CAPACITOR	100pF 50V J	
C2206	NDC31HJ-3R0X	C CAPACITOR	3pF 50V J	
C2207	NCB21HK-104X	C CAPACITOR	0.1uF 50V K	
C2208	NCB21HK-104X	C CAPACITOR	0.1uF 50V K	
C2302	NCB31HK-471X	C CAPACITOR	470pF 50V K	
C2303	QETN1HM-475Z	E CAPACITOR	4.7uF 50V M	
C2304	QETN1CM-107Z	E CAPACITOR	100uF 16V M	
C2305	NDC31HJ-101X	C CAPACITOR	100pF 50V J	
C2306	NDC31HJ-3R0X	C CAPACITOR	3pF 50V J	
C2307	NCB21HK-104X	C CAPACITOR	0.1uF 50V K	
C2308	NCB21HK-104X	C CAPACITOR	0.1uF 50V K	
C2402	NCB31HK-471X	C CAPACITOR	470pF 50V K	
C2403	QETN1HM-475Z	E CAPACITOR	4.7uF 50V M	
C2404	QETN1CM-107Z	E CAPACITOR	100uF 16V M	
C2405	NDC31HJ-101X	C CAPACITOR	100pF 50V J	
C2406	NDC31HJ-3R0X	C CAPACITOR	3pF 50V J	
C2407	NCB21HK-104X	C CAPACITOR	0.1uF 50V K	
C2408	NCB21HK-104X	C CAPACITOR	0.1uF 50V K	
C2502	NCB31HK-471X	C CAPACITOR	470pF 50V K	
C2503	QETN1HM-475Z	E CAPACITOR	4.7uF 50V M	
C2504	QETN1CM-107Z	E CAPACITOR	100uF 16V M	
C2505	NDC31HJ-101X	C CAPACITOR	100pF 50V J	
C2506	NDC31HJ-3R0X	C CAPACITOR	3pF 50V J	
C2507	NCB21HK-104X	C CAPACITOR	0.1uF 50V K	

⚠ Symbol No.	Part No.	Part Name	Description	Local
C2508	NCB21HK-104X	C CAPACITOR	0.1uF 50V K	
C2602	NCB31HK-471X	C CAPACITOR	470pF 50V K	
C2603	QETN1HM-475Z	E CAPACITOR	4.7uF 50V M	
C2604	QETN1CM-107Z	E CAPACITOR	100uF 16V M	
C2605	NDC31HJ-101X	C CAPACITOR	100pF 50V J	
C2606	NDC31HJ-3R0X	C CAPACITOR	3pF 50V J	
C2607	NCB21HK-104X	C CAPACITOR	0.1uF 50V K	
C2608	NCB21HK-104X	C CAPACITOR	0.1uF 50V K	
C2701	QETN1HM-107Z	E CAPACITOR	100uF 50V M	
C2702	QETN1EM-107Z	E CAPACITOR	100uF 25V M	
C2703	QETN1HM-107Z	E CAPACITOR	100uF 50V M	
C2704	QETN1EM-107Z	E CAPACITOR	100uF 25V M	
C2705	QETN1HM-107Z	E CAPACITOR	100uF 50V M	
C2706	QETN1HM-107Z	E CAPACITOR	100uF 50V M	
C2707	QETN1HM-106Z	E CAPACITOR	10uF 50V M	
C2711	QETN1HM-106Z	E CAPACITOR	10uF 50V M	
C2712	NCF31HZ-103X	C CAPACITOR	0.01uF 50V Z	
C2713	NCF31HZ-103X	C CAPACITOR	0.01uF 50V Z	
C3101	NCB31HK-152X	C CAPACITOR	1500pF 50V K	
C3102	QETN1HM-105Z	E CAPACITOR	1uF 50V M	
C3103	QETN1HM-105Z	E CAPACITOR	1uF 50V M	
C3104	QETN1HM-225Z	E CAPACITOR	2.2uF 50V M	
C3201	NCB31HK-152X	C CAPACITOR	1500pF 50V K	
C3202	QETN1HM-105Z	E CAPACITOR	1uF 50V M	
C3203	QETN1HM-105Z	E CAPACITOR	1uF 50V M	
C3204	QETN1HM-225Z	E CAPACITOR	2.2uF 50V M	
C3301	NCB31HK-152X	C CAPACITOR	1500pF 50V K	
C3302	QETN1HM-105Z	E CAPACITOR	1uF 50V M	
C3303	QETN1HM-105Z	E CAPACITOR	1uF 50V M	
C3304	QETN1HM-225Z	E CAPACITOR	2.2uF 50V M	
C3401	NCB31HK-152X	C CAPACITOR	1500pF 50V K	
C3402	QETN1HM-105Z	E CAPACITOR	1uF 50V M	
C3403	QETN1HM-105Z	E CAPACITOR	1uF 50V M	
C3404	QETN1HM-225Z	E CAPACITOR	2.2uF 50V M	
C3501	NCB31HK-152X	C CAPACITOR	1500pF 50V K	
C3502	QETN1HM-105Z	E CAPACITOR	1uF 50V M	
C3503	QETN1HM-105Z	E CAPACITOR	1uF 50V M	
C3504	QETN1HM-225Z	E CAPACITOR	2.2uF 50V M	
C3601	NCB31HK-152X	C CAPACITOR	1500pF 50V K	
C3602	QETN1HM-105Z	E CAPACITOR	1uF 50V M	
C3604	QETN1HM-225Z	E CAPACITOR	2.2uF 50V M	
C3701	NCF31HZ-103X	C CAPACITOR	0.01uF 50V Z	
C3702	NCF31HZ-103X	C CAPACITOR	0.01uF 50V Z	
C3703	NCF31HZ-103X	C CAPACITOR	0.01uF 50V Z	
C3704	NCF31HZ-103X	C CAPACITOR	0.01uF 50V Z	
C3705	NCF31HZ-103X	C CAPACITOR	0.01uF 50V Z	
C3706	NCF31HZ-103X	C CAPACITOR	0.01uF 50V Z	
C3715	QETN1CM-107Z	E CAPACITOR	100uF 16V M	
C3716	QETN1AM-227Z	E CAPACITOR	220uF 10V M	
C3720	QETN1EM-476Z	E CAPACITOR	47uF 25V M	
C3721	QEKC1CM-107Z	E CAPACITOR	100uF 16V M	
R151	NRSA63J-222X	MG RESISTOR	2.2kΩ 1/16W J	
R152	NRSA63J-222X	MG RESISTOR	2.2kΩ 1/16W J	
⚠ R161	QRZ9005-100X	FUSI RESISTOR	10Ω	
R162	QRJ146J-102X	UNF C RESISTOR	1kΩ 1/4W J	
⚠ R163	QRZ9005-100X	FUSI RESISTOR	10Ω	
R164	QRJ146J-102X	UNF C RESISTOR	1kΩ 1/4W J	
R165	QRJ146J-221X	UNF C RESISTOR	220Ω 1/4W J	
R166	QRL027J-391	OMF RESISTOR	390Ω 2W J	
⚠ R171	QRL027J-470	OMF RESISTOR	47Ω 2W J	
R501	NRSA63J-102X	MG RESISTOR	1kΩ 1/16W J	
R502	NRSA63J-104X	MG RESISTOR	100kΩ 1/16W J	
R504	NRSA63J-102X	MG RESISTOR	1kΩ 1/16W J	
R505	NRSA63J-102X	MG RESISTOR	1kΩ 1/16W J	
R506	NRSA63J-103X	MG RESISTOR	10kΩ 1/16W J	
R522	NRSA63J-103X	MG RESISTOR	10kΩ 1/16W J	
R523	NRSA63J-223X	MG RESISTOR	22kΩ 1/16W J	
R533	NRSA63J-103X	MG RESISTOR	10kΩ 1/16W J	
R534	NRSA63J-104X	MG RESISTOR	100kΩ 1/16W J	
R535	NRSA63J-104X	MG RESISTOR	100kΩ 1/16W J	
R536	NRSA63J-103X	MG RESISTOR	10kΩ 1/16W J	
R539	NRSA63J-472X	MG RESISTOR	4.7kΩ 1/16W J	
R540	NRSA63J-472X	MG RESISTOR	4.7kΩ 1/16W J	
R553	NRSA63J-153X	MG RESISTOR	15kΩ 1/16W J	
R554	NRSA63J-223X	MG RESISTOR	22kΩ 1/16W J	
R555	QRJ146J-271X	UNF C RESISTOR	270Ω 1/4W J	
R556	NRSA63J-102X	MG RESISTOR	1kΩ 1/16W J	

⚠ Symbol No.	Part No.	Part Name	Description	Local
R557	NRSA63J-104X	MG RESISTOR	100kΩ 1/16W J	
R558	NRSA63J-223X	MG RESISTOR	22kΩ 1/16W J	
R559	NRSA63J-223X	MG RESISTOR	22kΩ 1/16W J	
R560	NRSA63J-223X	MG RESISTOR	22kΩ 1/16W J	
R561	NRSA63J-822X	MG RESISTOR	8.2kΩ 1/16W J	
R562	NRSA63J-393X	MG RESISTOR	39kΩ 1/16W J	
R563	NRSA63J-223X	MG RESISTOR	22kΩ 1/16W J	
R572	NRSA02J-151X	MG RESISTOR	150Ω 1/10W J	
R601	NRSA63J-103X	MG RESISTOR	10kΩ 1/16W J	
R602	NRSA63J-272X	MG RESISTOR	2.7kΩ 1/16W J	
R603	NRSA63J-222X	MG RESISTOR	2.2kΩ 1/16W J	
R606	NRSA63J-223X	MG RESISTOR	22kΩ 1/16W J	
R607	NRSA63J-223X	MG RESISTOR	22kΩ 1/16W J	
R608	NRSA63J-223X	MG RESISTOR	22kΩ 1/16W J	
R611	NRSA63J-471X	MG RESISTOR	470Ω 1/16W J	
R612	NRSA63J-223X	MG RESISTOR	22kΩ 1/16W J	
R613	NRSA63J-223X	MG RESISTOR	22kΩ 1/16W J	
R614	NRSA63J-223X	MG RESISTOR	22kΩ 1/16W J	
R621	NRSA63J-103X	MG RESISTOR	10kΩ 1/16W J	
R622	NRSA63J-223X	MG RESISTOR	22kΩ 1/16W J	
R623	NRSA63J-103X	MG RESISTOR	10kΩ 1/16W J	
R624	NRSA63J-472X	MG RESISTOR	4.7kΩ 1/16W J	
R625	NRSA63J-472X	MG RESISTOR	4.7kΩ 1/16W J	
R626	NRSA63J-103X	MG RESISTOR	10kΩ 1/16W J	
R627	NRSA63J-472X	MG RESISTOR	4.7kΩ 1/16W J	
R628	NRSA63J-223X	MG RESISTOR	22kΩ 1/16W J	
R629	NRSA63J-103X	MG RESISTOR	10kΩ 1/16W J	
R631	NRSA63J-223X	MG RESISTOR	22kΩ 1/16W J	
R633	NRSA63J-223X	MG RESISTOR	22kΩ 1/16W J	
R635	NRSA63J-223X	MG RESISTOR	22kΩ 1/16W J	
R637	NRSA63J-223X	MG RESISTOR	22kΩ 1/16W J	
R640	NRSA63J-223X	MG RESISTOR	22kΩ 1/16W J	
R641	NRSA63J-223X	MG RESISTOR	22kΩ 1/16W J	
R642	NRSA63J-223X	MG RESISTOR	22kΩ 1/16W J	
R643	NRSA63J-223X	MG RESISTOR	22kΩ 1/16W J	
R644	NRSA63J-103X	MG RESISTOR	10kΩ 1/16W J	
R645	NRSA63J-102X	MG RESISTOR	1kΩ 1/16W J	
R2101	NRSA63J-103X	MG RESISTOR	10kΩ 1/16W J	
R2102	NRSA63J-471X	MG RESISTOR	470Ω 1/16W J	
R2103	NRSA63J-563X	MG RESISTOR	56kΩ 1/16W J	
R2104	NRSA63J-561X	MG RESISTOR	560Ω 1/16W J	
R2105	NRSA63J-563X	MG RESISTOR	56kΩ 1/16W J	
R2106	QRZ0224-R22	EMIT RESISTOR	0.22Ω	
R2107	NRSA63J-102X	MG RESISTOR	1kΩ 1/16W J	
R2108	NRSA63J-153X	MG RESISTOR	15kΩ 1/16W J	
R2109	NRSA63J-473X	MG RESISTOR	47kΩ 1/16W J	
R2110	QRK126J-4R7X	UNF C RESISTOR	4.7Ω 1/2W J	
R2111	QRJ146J-100X	UNF C RESISTOR	10Ω 1/4W J	
R2112	NRSA63J-752X	MG RESISTOR	7.5kΩ 1/16W J	
R2113	NRSA63J-222X	MG RESISTOR	2.2kΩ 1/16W J	
R2114	NRSA63J-104X	MG RESISTOR	100kΩ 1/16W J	
R2201	NRSA63J-103X	MG RESISTOR	10kΩ 1/16W J	
R2202	NRSA63J-471X	MG RESISTOR	470Ω 1/16W J	
R2203	NRSA63J-563X	MG RESISTOR	56kΩ 1/16W J	
R2204	NRSA63J-561X	MG RESISTOR	560Ω 1/16W J	
R2205	NRSA63J-563X	MG RESISTOR	56kΩ 1/16W J	
R2206	QRZ0224-R22	EMIT RESISTOR	0.22Ω	
R2207	NRSA63J-102X	MG RESISTOR	1kΩ 1/16W J	
R2208	NRSA63J-153X	MG RESISTOR	15kΩ 1/16W J	
R2209	NRSA63J-473X	MG RESISTOR	47kΩ 1/16W J	
R2210	QRK126J-4R7X	UNF C RESISTOR	4.7Ω 1/2W J	
R2211	QRJ146J-100X	UNF C RESISTOR	10Ω 1/4W J	
R2212	NRSA63J-222X	MG RESISTOR	2.2kΩ 1/16W J	
R2213	NRSA63J-222X	MG RESISTOR	2.2kΩ 1/16W J	
R2214	NRSA63J-104X	MG RESISTOR	100kΩ 1/16W J	
R2301	NRSA63J-103X	MG RESISTOR	10kΩ 1/16W J	
R2302	NRSA63J-471X	MG RESISTOR	470Ω 1/16W J	
R2303	NRSA63J-563X	MG RESISTOR	56kΩ 1/16W J	
R2304	NRSA63J-561X	MG RESISTOR	560Ω 1/16W J	
R2305	NRSA63J-563X	MG RESISTOR	56kΩ 1/16W J	
R2306	QRZ0224-R22	EMIT RESISTOR	0.22Ω	
R2307	NRSA63J-102X	MG RESISTOR	1kΩ 1/16W J	
R2308	NRSA63J-153X	MG RESISTOR	15kΩ 1/16W J	
R2309	NRSA63J-473X	MG RESISTOR	47kΩ 1/16W J	
R2310	QRK126J-4R7X	UNF C RESISTOR	4.7Ω 1/2W J	
R2311	QRJ146J-100X	UNF C RESISTOR	10Ω 1/4W J	
R2312	NRSA63J-222X	MG RESISTOR	2.2kΩ 1/16W J	
R2313	NRSA63J-222X	MG RESISTOR	2.2kΩ 1/16W J	

⚠ Symbol No.	Part No.	Part Name	Description	Local
R2314	NRSA63J-104X	MG RESISTOR	100kΩ 1/16W J	
R2401	NRSA63J-103X	MG RESISTOR	10kΩ 1/16W J	
R2402	NRSA63J-471X	MG RESISTOR	470Ω 1/16W J	
R2403	NRSA63J-563X	MG RESISTOR	56kΩ 1/16W J	
R2404	NRSA63J-561X	MG RESISTOR	560Ω 1/16W J	
R2405	NRSA63J-563X	MG RESISTOR	56kΩ 1/16W J	
R2406	QRZ0224-R22	EMIT RESISTOR	0.22Ω	
R2407	NRSA63J-102X	MG RESISTOR	1kΩ 1/16W J	
R2408	NRSA63J-153X	MG RESISTOR	15kΩ 1/16W J	
R2409	NRSA63J-473X	MG RESISTOR	47kΩ 1/16W J	
R2410	QRK126J-4R7X	UNF C RESISTOR	4.7Ω 1/2W J	
R2411	QRJ146J-100X	UNF C RESISTOR	10Ω 1/4W J	
R2412	NRSA63J-222X	MG RESISTOR	2.2kΩ 1/16W J	
R2413	NRSA63J-222X	MG RESISTOR	2.2kΩ 1/16W J	
R2414	NRSA63J-104X	MG RESISTOR	100kΩ 1/16W J	
R2501	NRSA63J-103X	MG RESISTOR	10kΩ 1/16W J	
R2502	NRSA63J-471X	MG RESISTOR	470Ω 1/16W J	
R2503	NRSA63J-563X	MG RESISTOR	56kΩ 1/16W J	
R2504	NRSA63J-561X	MG RESISTOR	560Ω 1/16W J	
R2505	NRSA63J-563X	MG RESISTOR	56kΩ 1/16W J	
R2506	QRZ0224-R22	EMIT RESISTOR	0.22Ω	
R2507	NRSA63J-102X	MG RESISTOR	1kΩ 1/16W J	
R2508	NRSA63J-153X	MG RESISTOR	15kΩ 1/16W J	
R2509	NRSA63J-473X	MG RESISTOR	47kΩ 1/16W J	
R2510	QRK126J-4R7X	UNF C RESISTOR	4.7Ω 1/2W J	
R2511	QRJ146J-100X	UNF C RESISTOR	10Ω 1/4W J	
R2512	NRSA63J-222X	MG RESISTOR	2.2kΩ 1/16W J	
R2513	NRSA63J-222X	MG RESISTOR	2.2kΩ 1/16W J	
R2514	NRSA63J-104X	MG RESISTOR	100kΩ 1/16W J	
R2601	NRSA63J-103X	MG RESISTOR	10kΩ 1/16W J	
R2602	NRSA63J-471X	MG RESISTOR	470Ω 1/16W J	
R2603	NRSA63J-563X	MG RESISTOR	56kΩ 1/16W J	
R2604	NRSA63J-561X	MG RESISTOR	560Ω 1/16W J	
R2605	NRSA63J-563X	MG RESISTOR	56kΩ 1/16W J	
R2606	QRZ0224-R22	EMIT RESISTOR	0.22Ω	
R2607	NRSA63J-102X	MG RESISTOR	1kΩ 1/16W J	
R2608	NRSA63J-153X	MG RESISTOR	15kΩ 1/16W J	
R2609	NRSA63J-473X	MG RESISTOR	47kΩ 1/16W J	
R2610	QRK126J-4R7X	UNF C RESISTOR	4.7Ω 1/2W J	
R2611	QRJ146J-100X	UNF C RESISTOR	10Ω 1/4W J	
R2612	NRSA63J-222X	MG RESISTOR	2.2kΩ 1/16W J	
R2613	NRSA63J-222X	MG RESISTOR	2.2kΩ 1/16W J	
R2614	NRSA63J-104X	MG RESISTOR	100kΩ 1/16W J	
⚠ R2701	QRZ9005-220X	FUSI RESISTOR	22Ω	
⚠ R2702	QRZ9005-470X	FUSI RESISTOR	47Ω 1/4W G	
R2703	QRK126J-222X	UNF C RESISTOR	2.2kΩ 1/2W J	
R2704	QRK126J-222X	UNF C RESISTOR	2.2kΩ 1/2W J	
R2705	NRSA63J-333X	MG RESISTOR	33kΩ 1/16W J	
⚠ R2706	QRZ9006-4R7X	F.RESISTOR	4.7Ω 1/4W J	
⚠ R2707	QRZ9006-4R7X	F.RESISTOR	4.7Ω 1/4W J	
⚠ R2708	QRZ9006-4R7X	F.RESISTOR	4.7Ω 1/4W J	
⚠ R2709	QRZ9006-4R7X	F.RESISTOR	4.7Ω 1/4W J	
⚠ R2710	QRZ9005-100X	FUSI RESISTOR	10Ω	
R2711	NRSA63J-333X	MG RESISTOR	33kΩ 1/16W J	
R2721	QRE141J-472Y	C RESISTOR	4.7kΩ 1/4W J	
R2722	QRE141J-472Y	C RESISTOR	4.7kΩ 1/4W J	
R3101	NRSA63J-153X	MG RESISTOR	15kΩ 1/16W J	
R3102	NRSA63J-183X	MG RESISTOR	18kΩ 1/16W J	
R3103	NRSA63J-472X	MG RESISTOR	4.7kΩ 1/16W J	
R3104	NRSA63J-104X	MG RESISTOR	100kΩ 1/16W J	
R3105	NRSA63J-474X	MG RESISTOR	470kΩ 1/16W J	
R3106	NRSA63J-470X	MG RESISTOR	47Ω 1/16W J	
R3107	NRSA63J-334X	MG RESISTOR	330kΩ 1/16W J	
R3108	NRSA63J-101X	MG RESISTOR	100Ω 1/16W J	
R3109	NRSA63J-102X	MG RESISTOR	1kΩ 1/16W J	
R3110	NRSA63J-104X	MG RESISTOR	100kΩ 1/16W J	
R3111	NRSA63J-471X	MG RESISTOR	470Ω 1/16W J	
R3112	NRSA63J-103X	MG RESISTOR	10kΩ 1/16W J	
R3113	NRSA63J-103X	MG RESISTOR	10kΩ 1/16W J	
R3201	NRSA63J-153X	MG RESISTOR	15kΩ 1/16W J	
R3202	NRSA63J-183X	MG RESISTOR	18kΩ 1/16W J	
R3203	NRSA63J-472X	MG RESISTOR	4.7kΩ 1/16W J	
R3204	NRSA63J-104X	MG RESISTOR	100kΩ 1/16W J	
R3205	NRSA63J-474X	MG RESISTOR	470kΩ 1/16W J	
R3206	NRSA63J-470X	MG RESISTOR	47Ω 1/16W J	
R3207	NRSA63J-334X	MG RESISTOR	330kΩ 1/16W J	
R3208	NRSA63J-101X	MG RESISTOR	100Ω 1/16W J	
R3209	NRSA63J-102X	MG RESISTOR	1kΩ 1/16W J	

⚠ Symbol No.	Part No.	Part Name	Description	Local
R3210	NRSA63J-104X	MG RESISTOR	100kΩ 1/16W J	
R3211	NRSA63J-471X	MG RESISTOR	470Ω 1/16W J	
R3212	NRSA63J-103X	MG RESISTOR	10kΩ 1/16W J	
R3213	NRSA63J-103X	MG RESISTOR	10kΩ 1/16W J	
R3301	NRSA63J-153X	MG RESISTOR	15kΩ 1/16W J	
R3302	NRSA63J-183X	MG RESISTOR	18kΩ 1/16W J	
R3303	NRSA63J-472X	MG RESISTOR	4.7kΩ 1/16W J	
R3304	NRSA63J-104X	MG RESISTOR	100kΩ 1/16W J	
R3305	NRSA63J-474X	MG RESISTOR	470kΩ 1/16W J	
R3306	NRSA63J-470X	MG RESISTOR	47Ω 1/16W J	
R3307	NRSA63J-334X	MG RESISTOR	330kΩ 1/16W J	
R3308	NRSA63J-101X	MG RESISTOR	100Ω 1/16W J	
R3309	NRSA63J-102X	MG RESISTOR	1kΩ 1/16W J	
R3310	NRSA63J-104X	MG RESISTOR	100kΩ 1/16W J	
R3311	NRSA63J-471X	MG RESISTOR	470Ω 1/16W J	
R3312	NRSA63J-103X	MG RESISTOR	10kΩ 1/16W J	
R3313	NRSA63J-103X	MG RESISTOR	10kΩ 1/16W J	
R3401	NRSA63J-153X	MG RESISTOR	15kΩ 1/16W J	
R3402	NRSA63J-183X	MG RESISTOR	18kΩ 1/16W J	
R3403	NRSA63J-472X	MG RESISTOR	4.7kΩ 1/16W J	
R3404	NRSA63J-104X	MG RESISTOR	100kΩ 1/16W J	
R3405	NRSA63J-474X	MG RESISTOR	470kΩ 1/16W J	
R3406	NRSA63J-470X	MG RESISTOR	47Ω 1/16W J	
R3407	NRSA63J-334X	MG RESISTOR	330kΩ 1/16W J	
R3408	NRSA63J-101X	MG RESISTOR	100Ω 1/16W J	
R3409	NRSA63J-102X	MG RESISTOR	1kΩ 1/16W J	
R3410	NRSA63J-104X	MG RESISTOR	100kΩ 1/16W J	
R3411	NRSA63J-471X	MG RESISTOR	470Ω 1/16W J	
R3412	NRSA63J-103X	MG RESISTOR	10kΩ 1/16W J	
R3413	NRSA63J-103X	MG RESISTOR	10kΩ 1/16W J	
R3501	NRSA63J-153X	MG RESISTOR	15kΩ 1/16W J	
R3502	NRSA63J-183X	MG RESISTOR	18kΩ 1/16W J	
R3503	NRSA63J-472X	MG RESISTOR	4.7kΩ 1/16W J	
R3504	NRSA63J-104X	MG RESISTOR	100kΩ 1/16W J	
R3505	NRSA63J-474X	MG RESISTOR	470kΩ 1/16W J	
R3506	NRSA63J-470X	MG RESISTOR	47Ω 1/16W J	
R3507	NRSA63J-334X	MG RESISTOR	330kΩ 1/16W J	
R3508	NRSA63J-101X	MG RESISTOR	100Ω 1/16W J	
R3509	NRSA63J-102X	MG RESISTOR	1kΩ 1/16W J	
R3510	NRSA63J-104X	MG RESISTOR	100kΩ 1/16W J	
R3511	NRSA63J-471X	MG RESISTOR	470Ω 1/16W J	
R3512	NRSA63J-103X	MG RESISTOR	10kΩ 1/16W J	
R3513	NRSA63J-103X	MG RESISTOR	10kΩ 1/16W J	
R3601	NRSA63J-153X	MG RESISTOR	15kΩ 1/16W J	
R3602	NRSA63J-183X	MG RESISTOR	18kΩ 1/16W J	
R3603	NRSA63J-472X	MG RESISTOR	4.7kΩ 1/16W J	
R3604	NRSA63J-104X	MG RESISTOR	100kΩ 1/16W J	
R3605	NRSA63J-154X	MG RESISTOR	150kΩ 1/16W J	
R3607	NRSA63J-104X	MG RESISTOR	100kΩ 1/16W J	
R3608	NRSA63J-101X	MG RESISTOR	100Ω 1/16W J	
R3610	NRSA63J-104X	MG RESISTOR	100kΩ 1/16W J	
R3611	NRSA63J-471X	MG RESISTOR	470Ω 1/16W J	
R3717	NRSA63J-103X	MG RESISTOR	10kΩ 1/16W J	
R3718	NRSA63J-104X	MG RESISTOR	100kΩ 1/16W J	
R3719	QRE141J-102Y	C RESISTOR	1kΩ 1/4W J	
⚠ R3720	QRJ146J-100X	UNF C RESISTOR	10Ω 1/4W J	
R3721	NRSA63J-221X	MG RESISTOR	220Ω 1/16W J	
R3725	NRSA63J-472X	MG RESISTOR	4.7kΩ 1/16W J	
R3726	NRSA63J-103X	MG RESISTOR	10kΩ 1/16W J	
⚠ R3727	QRL01DJ-180X	OMF RESISTOR	18Ω 1W J	
R3728	NRSA63J-101X	MG RESISTOR	100Ω 1/16W J	
R3729	NRSA63J-473X	MG RESISTOR	47kΩ 1/16W J	
R3730	NRSA63J-470X	MG RESISTOR	47Ω 1/16W J	
R3732	NRSA63J-153X	MG RESISTOR	15kΩ 1/16W J	
R3741	NRSA63J-473X	MG RESISTOR	47kΩ 1/16W J	
R3742	NRSA63J-104X	MG RESISTOR	100kΩ 1/16W J	
L2101	QQLZ038-R45	COIL	0.45uH	
L2201	QQLZ038-R45	COIL	0.45uH	
L2301	QQLZ038-R45	COIL	0.45uH	
L2401	QQLZ038-R45	COIL	0.45uH	
L2501	QQLZ038-R45	COIL	0.45uH	
L2601	QQLZ038-R45	COIL	0.45uH	
⚠ CN101	QGA7901C1-02	CONNECTOR	W-B (1-2)	
⚠ CN102	QGA7901C1-02	CONNECTOR	W-B (1-2)	
⚠ CN151	QGA3901C1-05	CONNECTOR	W-B (1-5)	
CN271	QGB2510J1-14	CONNECTOR	B-B (1-14)	
CN272	QGB2510J1-09	CONNECTOR	B-B (1-9)	
CN273	QGB2510J1-14	CONNECTOR	B-B (1-14)	
CN274	QGA3901C1-02	CONNECTOR	W-B (1-2)	
CN371	QGA2501C1-02	CONNECTOR	W-B (1-2)	
CN372	QGB2510K2-09	CONNECTOR	B-B (1-9)	
CN373	QGA2501C1-02	CONNECTOR		
CN501	QGB2510K2-14	CONNECTOR	B-B (1-14)	
CN502	QGB2510K2-14	CONNECTOR	B-B (1-14)	
EP201	QNZ0136-001Z	EARTH PLATE		
EP501	QNZ0136-001Z	EARTH PLATE		
FC101	QNG0003-001Z	FUSE CLIP		
FC102	QNG0003-001Z	FUSE CLIP		
FC155	QNG0003-001Z	FUSE CLIP		
FC156	QNG0003-001Z	FUSE CLIP		
FC157	QNG0003-001Z	FUSE CLIP		
FC158	QNG0003-001Z	FUSE CLIP		
FW501	QUM213-28Z4Z4	RIBBON WIRE		
HS151	QZW0138-001	HEAT SINK		
J2701	QND0118-001	DIN CONNECTOR		
J2702	QNB0195-001	SPEAKER TERMINA		
⚠ RY101	QSK0142-001	RELAY		
RY271	QSK0127-001	RELAY		
RY272	QSK0127-001	RELAY		
RY273	QSK0127-001	RELAY		
TH271	QAD0146-103	N THERMISTOR	10kΩ	
WC201	QZW0112-001	WIRE CLAMP		
X601	QAX0246-001Z	C RESONATOR	8.00MHz	

DVD servo board (FMU-SD9-1M)

Block No. [0][5][0][0]

⚠ Symbol No.	Part No.	Part Name	Description	Local
IC201	LA6502-X	IC		
IC301	MN2DS0004AA-H	IC		
IC302	BA00HC5WF-X	IC		
IC305	MM1563DF-X	IC	3.3V Regulator	
IC451	MN101C61GNE	IC(MCU)		
IC452	BR93L56RFV-W-X	IC		
IC453	S-80827CNNB-W	IC		
IC505	K4S643232F-TC60	IC		
IC505 or	K4S643232E-TC70	IC		
IC505 or	W986432DH-7	IC		
IC509	AT49BV322AT70TI	IC(FLASH)		
IC512	SN74LVC373APW-X	IC(DIGITAL)		
IC513	SN74LVC373APW-X	IC(DIGITAL)		
IC701	AK4384VT-X	IC		
IC702	AK4384VT-X	IC		
IC703	AK4384VT-X	IC		
IC704	CS5342-CZZ-X	IC(DIGITAL)		
IC705	MM1615AN-X	IC		
Q101	KTA1001/Y/-X	TRANSISTOR		
Q101 or	2SB1424/R/-W	TRANSISTOR		
Q102	2SC4617/R/-X	TRANSISTOR		
Q103	KTA1001/Y/-X	TRANSISTOR		
Q103 or	2SB1424/R/-W	TRANSISTOR		
Q104	2SC4617/R/-X	TRANSISTOR		
Q105	UN2119-X	TRANSISTOR		
C101	NCF31CZ-104X	C CAPACITOR	0.1uF 16V Z	
C102	NCF31CZ-104X	C CAPACITOR	0.1uF 16V Z	
C103	NCF31CZ-104X	C CAPACITOR	0.1uF 16V Z	
C104	NCF31CZ-104X	C CAPACITOR	0.1uF 16V Z	
C105	NEA70JM-226X	E CAPACITOR	22uF 6.3V M	
C106	NEA70JM-476X	E CAPACITOR	47uF 6.3V M	
C107	NCF31CZ-104X	C CAPACITOR	0.1uF 16V Z	
C108	NEA70JM-476X	E CAPACITOR	47uF 6.3V M	
C204	NCF31CZ-104X	C CAPACITOR	0.1uF 16V Z	
C205	NCB31HK-271X	C CAPACITOR	270pF 50V K	
C206	NDC31HJ-151X	C CAPACITOR	150pF 50V J	
C211	NCB31CK-223X	C CAPACITOR	0.022uF 16V K	
C217	NCF31CZ-104X	C CAPACITOR	0.1uF 16V Z	
C251	NCB31AK-474X	C CAPACITOR	0.47uF 10V K	

⚠ Symbol No.	Part No.	Part Name	Description	Local
C256	NCB31CK-104X	C CAPACITOR	0.1uF 16V K	
C257	NCB31HK-822X	C CAPACITOR	8200pF 50V K	
C258	NCB31CK-153X	C CAPACITOR	0.015uF 16V K	
C259	NCB31CK-153X	C CAPACITOR	0.015uF 16V K	
C260	NCB31HK-223X	C CAPACITOR	0.022uF 50V K	
C261	NCB31HK-223X	C CAPACITOR	0.022uF 50V K	
C262	NCB31HK-223X	C CAPACITOR	0.022uF 50V K	
C301	NEA70GM-227X	E CAPACITOR	220uF 4V M	
C302	NEA70GM-476X	E CAPACITOR	47uF 4V M	
C303	NBE20JM-476X	TA E CAPACITOR	47uF 6.3V M	
C304	NCB30JK-105X	C CAPACITOR	1uF 6.3V K	
C305	NCF31CZ-104X	C CAPACITOR	0.1uF 16V Z	
C306	NCF31CZ-104X	C CAPACITOR	0.1uF 16V Z	
C307	NCF31CZ-104X	C CAPACITOR	0.1uF 16V Z	
C308	NCF31CZ-104X	C CAPACITOR	0.1uF 16V Z	
C309	NCF31CZ-104X	C CAPACITOR	0.1uF 16V Z	
C310	NCB31CK-104X	C CAPACITOR	0.1uF 16V K	
C311	NCF31CZ-104X	C CAPACITOR	0.1uF 16V Z	
C312	NCF31CZ-104X	C CAPACITOR	0.1uF 16V Z	
C313	NCF31CZ-104X	C CAPACITOR	0.1uF 16V Z	
C314	NCB31CK-104X	C CAPACITOR	0.1uF 16V K	
C315	NCF31CZ-104X	C CAPACITOR	0.1uF 16V Z	
C316	NCB31CK-104X	C CAPACITOR	0.1uF 16V K	
C317	NCF31CZ-104X	C CAPACITOR	0.1uF 16V Z	
C318	NCF31CZ-104X	C CAPACITOR	0.1uF 16V Z	
C319	NCB31CK-104X	C CAPACITOR	0.1uF 16V K	
C320	NCB31CK-104X	C CAPACITOR	0.1uF 16V K	
C321	NCB31CK-104X	C CAPACITOR	0.1uF 16V K	
C322	NCB31CK-104X	C CAPACITOR	0.1uF 16V K	
C323	NCB31CK-104X	C CAPACITOR	0.1uF 16V K	
C324	NCB30JK-105X	C CAPACITOR	1uF 6.3V K	
C325	NDC31HJ-180X	C CAPACITOR	18pF 50V J	
C326	NDC31HJ-150X	C CAPACITOR	15pF 50V J	
C328	NCB30JK-105X	C CAPACITOR	1uF 6.3V K	
C330	NCF31CZ-104X	C CAPACITOR	0.1uF 16V Z	
C331	NCB31CK-333X	C CAPACITOR	0.033uF 16V K	
C332	NCB31CK-104X	C CAPACITOR	0.1uF 16V K	
C333	NCB31CK-104X	C CAPACITOR	0.1uF 16V K	
C334	NCB31CK-104X	C CAPACITOR	0.1uF 16V K	
C335	NCF31CZ-104X	C CAPACITOR	0.1uF 16V Z	
C336	NBE20JM-226X	TA E CAPACITOR	22uF 6.3V M	
C337	NCB31CK-183X	C CAPACITOR	0.018uF 16V K	
C338	NCB31HK-562X	C CAPACITOR	5600pF 50V K	
C339	NCF31CZ-104X	C CAPACITOR	0.1uF 16V Z	
C340	NCB30JK-105X	C CAPACITOR	1uF 6.3V K	
C341	NCB30JK-105X	C CAPACITOR	1uF 6.3V K	
C347	NCB31CK-104X	C CAPACITOR	0.1uF 16V K	
C348	NCB31CK-104X	C CAPACITOR	0.1uF 16V K	
C349	NCF31CZ-104X	C CAPACITOR	0.1uF 16V Z	
C350	NCB31CK-104X	C CAPACITOR	0.1uF 16V K	
C351	NCB31CK-103X	C CAPACITOR	0.01uF 16V K	
C352	NCB31CK-153X	C CAPACITOR	0.015uF 16V K	
C353	NCB31HK-561X	C CAPACITOR	560pF 50V K	
C354	NCB31HK-561X	C CAPACITOR	560pF 50V K	
C356	NCB21CK-105X	C CAPACITOR	1uF 16V K	
C359	NCF31CZ-104X	C CAPACITOR	0.1uF 16V Z	
C371	NCF31AZ-105X	C CAPACITOR	1uF 10V Z	
C380	NCB21CK-105X	C CAPACITOR	1uF 16V K	
C381	NCB21AK-225X	C CAPACITOR	2.2uF 10V K	
C382	NCB31HK-471X	C CAPACITOR	470pF 50V K	
C391	NCF31CZ-104X	C CAPACITOR	0.1uF 16V Z	
C451	NCF31CZ-104X	C CAPACITOR	0.1uF 16V Z	
C452	NCB31CK-104X	C CAPACITOR	0.1uF 16V K	
C453	NCF31CZ-104X	C CAPACITOR	0.1uF 16V Z	
C454	NCB31CK-103X	C CAPACITOR	0.01uF 16V K	
C455	NCB31CK-103X	C CAPACITOR	0.01uF 16V K	
C551	NCF31CZ-104X	C CAPACITOR	0.1uF 16V Z	
C552	NCF31CZ-104X	C CAPACITOR	0.1uF 16V Z	
C553	NCF31CZ-104X	C CAPACITOR	0.1uF 16V Z	
C554	NCF31CZ-104X	C CAPACITOR	0.1uF 16V Z	
C555	NCF31CZ-104X	C CAPACITOR	0.1uF 16V Z	
C556	NCF31AZ-105X	C CAPACITOR	1uF 10V Z	
C557	NCF31CZ-104X	C CAPACITOR	0.1uF 16V Z	
C558	NEA70GM-476X	E CAPACITOR	47uF 4V M	
C701	NCB21CK-105X	C CAPACITOR	1uF 16V K	
C702	NCB31CK-103X	C CAPACITOR	0.01uF 16V K	
C703	NCB30JK-105X	C CAPACITOR	1uF 6.3V K	
C704	NCF21CZ-225X	C CAPACITOR	2.2uF 16V Z	

⚠ Symbol No.	Part No.	Part Name	Description	Local
C705	NCF21CZ-225X	C CAPACITOR	2.2uF 16V Z	
C706	NCF21CZ-225X	C CAPACITOR	2.2uF 16V Z	
C707	NCF21CZ-225X	C CAPACITOR	2.2uF 16V Z	
C708	NCF21CZ-225X	C CAPACITOR	2.2uF 16V Z	
C709	NEA70JM-476X	E CAPACITOR	47uF 6.3V M	
C712	NCF31CZ-104X	C CAPACITOR	0.1uF 16V Z	
C713	NEA71CM-106X	E CAPACITOR	10uF 16V M	
C714	NCF31CZ-104X	C CAPACITOR	0.1uF 16V Z	
C715	NCF31CZ-104X	C CAPACITOR	0.1uF 16V Z	
C716	NCF31CZ-104X	C CAPACITOR	0.1uF 16V Z	
C717	NCF31CZ-104X	C CAPACITOR	0.1uF 16V Z	
C718	NCF31CZ-104X	C CAPACITOR	0.1uF 16V Z	
C722	NCB31CK-104X	C CAPACITOR	0.1uF 16V K	
C910	NCB31CK-103X	C CAPACITOR	0.01uF 16V K	
R101	NRSA63J-101X	MG RESISTOR	100Ω 1/16W J	
R102	NRSA63J-101X	MG RESISTOR	100Ω 1/16W J	
R103	NRSA63J-243X	MG RESISTOR	24kΩ 1/16W J	
R104	NRSA63J-303X	MG RESISTOR	30kΩ 1/16W J	
R105	NRS125J-270X	MG RESISTOR	27Ω 1/2W J	
R106	NRSA63J-2R2X	MG RESISTOR	2.2Ω 1/16W J	
R107	NRSA63J-101X	MG RESISTOR	100Ω 1/16W J	
R108	NRSA63J-471X	MG RESISTOR	470Ω 1/16W J	
R109	NRSA63J-471X	MG RESISTOR	470Ω 1/16W J	
R110	NRSA63J-0R0X	MG RESISTOR	0Ω 1/16W J	
R111	NRSA63J-243X	MG RESISTOR	24kΩ 1/16W J	
R112	NRSA63J-303X	MG RESISTOR	30kΩ 1/16W J	
R113	NRSA02J-270X	MG RESISTOR	27Ω 1/10W J	
R114	NRSA63J-2R2X	MG RESISTOR	2.2Ω 1/16W J	
R115	NRSA63J-101X	MG RESISTOR	100Ω 1/16W J	
R116	NRSA63J-471X	MG RESISTOR	470Ω 1/16W J	
R117	NRSA63J-331X	MG RESISTOR	330Ω 1/16W J	
R118	NRSA63J-0R0X	MG RESISTOR	0Ω 1/16W J	
R119	NRSA63J-0R0X	MG RESISTOR	0Ω 1/16W J	
R120	NRSA63J-0R0X	MG RESISTOR	0Ω 1/16W J	
R122	NRSA63J-0R0X	MG RESISTOR	0Ω 1/16W J	
R123	NRSA63J-0R0X	MG RESISTOR	0Ω 1/16W J	
R125	NRSA02J-1R0X	MG RESISTOR	1Ω 1/10W J	
R126	NRSA02J-181X	MG RESISTOR	180Ω 1/10W J	
R127	NRSA63J-333X	MG RESISTOR	33kΩ 1/16W J	
R128	NRSA63J-163X	MG RESISTOR	16kΩ 1/16W J	
R204	NRSA63J-273X	MG RESISTOR	27kΩ 1/16W J	
R205	NRSA63J-273X	MG RESISTOR	27kΩ 1/16W J	
R206	NRSA63J-303X	MG RESISTOR	30kΩ 1/16W J	
R207	NRSA63J-473X	MG RESISTOR	47kΩ 1/16W J	
R213	NRSA63J-103X	MG RESISTOR	10kΩ 1/16W J	
R214	NRSA63J-103X	MG RESISTOR	10kΩ 1/16W J	
R219	NRSA63J-183X	MG RESISTOR	18kΩ 1/16W J	
R220	NRSA63J-243X	MG RESISTOR	24kΩ 1/16W J	
R221	NRSA63J-682X	MG RESISTOR	6.8kΩ 1/16W J	
R251	NRS125J-R47X	MG RESISTOR	0.47Ω 1/2W J	
R252	NRSA63J-2R2X	MG RESISTOR	2.2Ω 1/16W J	
R257	NRSA63J-0R0X	MG RESISTOR	0Ω 1/16W J	
R259	NRSA63J-103X	MG RESISTOR	10kΩ 1/16W J	
R301	NRSA63D-911X	MG RESISTOR	910Ω 1/16W D	
R302	NRSA63D-202X	MG RESISTOR	2kΩ 1/16W D	
R303	NRSA63J-270X	MG RESISTOR	27Ω 1/16W J	
R306	NRSA63J-102X	MG RESISTOR	1kΩ 1/16W J	
R307	NRSA63J-102X	MG RESISTOR	1kΩ 1/16W J	
R308	NRSA63J-223X	MG RESISTOR	22kΩ 1/16W J	
R309	NRSA63J-104X	MG RESISTOR	100kΩ 1/16W J	
R312	NRSA63J-0R0X	MG RESISTOR	0Ω 1/16W J	
R313	NRSA63J-0R0X	MG RESISTOR	0Ω 1/16W J	
R314	NRSA63J-0R0X	MG RESISTOR	0Ω 1/16W J	
R315	NRSA63J-0R0X	MG RESISTOR	0Ω 1/16W J	
R316	NRSA63J-0R0X	MG RESISTOR	0Ω 1/16W J	
R317	NRSA63J-0R0X	MG RESISTOR	0Ω 1/16W J	
R319	NRSA63J-0R0X	MG RESISTOR	0Ω 1/16W J	
R320	NRSA63J-103X	MG RESISTOR	10kΩ 1/16W J	
R334	NRSA63J-151X	MG RESISTOR	150Ω 1/16W J	
R335	NRSA63J-151X	MG RESISTOR	150Ω 1/16W J	
R336	NRSA63J-151X	MG RESISTOR	150Ω 1/16W J	
R337	NRSA63J-151X	MG RESISTOR	150Ω 1/16W J	
R338	NRSA63J-0R0X	MG RESISTOR	0Ω 1/16W J	
R339	NRSA63J-0R0X	MG RESISTOR	0Ω 1/16W J	
R340	NRSA63D-303X	MG RESISTOR	30kΩ 1/16W D	
R341	NRSA63D-362X	MG RESISTOR	3.6kΩ 1/16W D	
R342	NRSA63D-222X	MG RESISTOR	2.2kΩ 1/16W D	

⚠ Symbol No.	Part No.	Part Name	Description	Local
R343	NRSA63J-0R0X	MG RESISTOR	0Ω 1/16W J	
R345	NRSA63J-100X	MG RESISTOR	10Ω 1/16W J	
R346	NRSA63J-223X	MG RESISTOR	22kΩ 1/16W J	
R347	NRSA63J-203X	MG RESISTOR	20kΩ 1/16W J	
R348	NRSA63J-6R8X	MG RESISTOR	6.8Ω 1/16W J	
R351	NRSA63J-681X	MG RESISTOR	680Ω 1/16W J	
R352	NRSA63J-105X	MG RESISTOR	1MΩ 1/16W J	
R353	NRSA63J-101X	MG RESISTOR	100Ω 1/16W J	
R354	NRSA63J-101X	MG RESISTOR	100Ω 1/16W J	
R355	NRSA63J-331X	MG RESISTOR	330Ω 1/16W J	
R356	NRSA63J-331X	MG RESISTOR	330Ω 1/16W J	
R357	NRSA63J-221X	MG RESISTOR	220Ω 1/16W J	
R358	NRSA63J-221X	MG RESISTOR	220Ω 1/16W J	
R359	NRSA63J-221X	MG RESISTOR	220Ω 1/16W J	
R360	NRSA63J-221X	MG RESISTOR	220Ω 1/16W J	
R362	NRSA63J-331X	MG RESISTOR	330Ω 1/16W J	
R363	NRSA63J-151X	MG RESISTOR	150Ω 1/16W J	
R367	NRSA63J-221X	MG RESISTOR	220Ω 1/16W J	
R372	NRSA63J-103X	MG RESISTOR	10kΩ 1/16W J	
R373	NRSA63J-103X	MG RESISTOR	10kΩ 1/16W J	
R380	NRSA63J-473X	MG RESISTOR	47kΩ 1/16W J	
R384	NRSA63J-102X	MG RESISTOR	1kΩ 1/16W J	
R385	NRSA63J-102X	MG RESISTOR	1kΩ 1/16W J	
R392	NRSA63J-103X	MG RESISTOR	10kΩ 1/16W J	
R393	NRSA63J-0R0X	MG RESISTOR	0Ω 1/16W J	
R394	NRSA63J-0R0X	MG RESISTOR	0Ω 1/16W J	
R395	NRSA63J-472X	MG RESISTOR	4.7kΩ 1/16W J	
R452	NRSA63J-222X	MG RESISTOR	2.2kΩ 1/16W J	
R453	NRSA63J-103X	MG RESISTOR	10kΩ 1/16W J	
R454	NRSA63J-103X	MG RESISTOR	10kΩ 1/16W J	
R455	NRSA63J-103X	MG RESISTOR	10kΩ 1/16W J	
R456	NRSA63J-103X	MG RESISTOR	10kΩ 1/16W J	
R457	NRSA63J-0R0X	MG RESISTOR	0Ω 1/16W J	
R458	NRSA63J-102X	MG RESISTOR	1kΩ 1/16W J	
R535	NRSA63J-473X	MG RESISTOR	47kΩ 1/16W J	
R561	NRSA63J-102X	MG RESISTOR	1kΩ 1/16W J	
R562	NRSA63J-101X	MG RESISTOR	100Ω 1/16W J	
R701	NRSA63J-0R0X	MG RESISTOR	0Ω 1/16W J	
R702	NRSA63J-2R2X	MG RESISTOR	2.2Ω 1/16W J	
R703	NRSA63J-471X	MG RESISTOR	470Ω 1/16W J	
R704	NRSA63J-471X	MG RESISTOR	470Ω 1/16W J	
R705	NRSA63J-471X	MG RESISTOR	470Ω 1/16W J	
R706	NRSA63J-471X	MG RESISTOR	470Ω 1/16W J	
R707	NRSA63J-471X	MG RESISTOR	470Ω 1/16W J	
R708	NRSA63J-471X	MG RESISTOR	470Ω 1/16W J	
R710	NRSA63J-0R0X	MG RESISTOR	0Ω 1/16W J	
R714	NRSA63J-221X	MG RESISTOR	220Ω 1/16W J	
R715	NRSA63J-221X	MG RESISTOR	220Ω 1/16W J	
R716	NRSA63J-221X	MG RESISTOR	220Ω 1/16W J	
R717	NRSA63J-473X	MG RESISTOR	47kΩ 1/16W J	
R718	NRSA63J-103X	MG RESISTOR	10kΩ 1/16W J	
R719	NRSA63J-5R1X	MG RESISTOR	5.1Ω 1/16W J	
R720	NRSA63J-473X	MG RESISTOR	47kΩ 1/16W J	
R722	NRSA63J-0R0X	MG RESISTOR	0Ω 1/16W J	
R741	NRSA63J-0R0X	MG RESISTOR	0Ω 1/16W J	
R742	NRSA63J-0R0X	MG RESISTOR	0Ω 1/16W J	
R743	NRSA63J-0R0X	MG RESISTOR	0Ω 1/16W J	
R744	NRSA63J-0R0X	MG RESISTOR	0Ω 1/16W J	
CN101	QGF0523F1-24W	CONNECTOR	FFC/FPC (1-24)	
CN201	QGF1016F2-08W	CONNECTOR	FFC/FPC (1-8)	
CN301	QGA1002C1-06X	CONNECTOR	W-B (1-6)	
CN451	QGF1016F2-15W	CONNECTOR	FFC/FPC (1-15)	
CN452	QGA2001F2-02X	CONNECTOR	W-B (1-2)	
CN453	QGA2001F2-03X	CONNECTOR	W-B (1-3)	
CN455	QGA1002C1-06X	CONNECTOR	W-B (1-6)	
CN701	QGF1016F2-10W	CONNECTOR	FFC/FPC (1-10)	
CN702	QGF1016F2-08W	CONNECTOR	FFC/FPC (1-8)	
CN703	QGF1016F2-28W	CONNECTOR	FFC/FPC (1-28)	
K101	NRSA02J-0R0X	MG RESISTOR	0Ω 1/10W J	
K102	NRSA02J-0R0X	MG RESISTOR	0Ω 1/10W J	
K350	NQR0354-001X	FERRITE BEADS		
K352	NQR0354-001X	FERRITE BEADS		
K451	NRSA63J-0R0X	MG RESISTOR	0Ω 1/16W J	
K551	NQR0129-002X	FERRITE BEADS		
K552	NQR0129-002X	FERRITE BEADS		
K553	NQR0129-002X	FERRITE BEADS		
K554	NQR0129-002X	FERRITE BEADS		

⚠ Symbol No.	Part No.	Part Name	Description	Local
K555	NQR0022-005X	FERRITE BEADS		
K556	NQR0129-002X	FERRITE BEADS		
K562	NRSA63J-0R0X	MG RESISTOR	0Ω 1/16W J	
K566	NRSA63J-0R0X	MG RESISTOR	0Ω 1/16W J	
TH301	NAD0025-103X	N THERMISTOR	10kΩ	
X351	NAX0550-001X	CRYSTAL	27.000MHz	
X451	NAX0248-001X	C OSCILLATOR		

DVD loading board (FMU-SD9-1M)

Block No. [0][6][0][0]

⚠ Symbol No.	Part No.	Part Name	Description	Local
IC1	LB1641	IC		
IC2	LB1641	IC		
D1	MTZJ6.2A-T2	Z DIODE		
C1	QEKC1AM-107Z	E CAPACITOR	100uF 10V M	
C2	QCFB1HZ-104Y	C CAPACITOR	0.1uF 50V Z	
C3	QFLC1HJ-103Z	M CAPACITOR	0.01uF 50V J	
C5	QFLC1HJ-103Z	M CAPACITOR	0.01uF 50V J	
C6	QCFB1HZ-104Y	C CAPACITOR	0.1uF 50V Z	
C7	QCFB1HZ-104Y	C CAPACITOR	0.1uF 50V Z	
CN1	QGF1036F1-15	CONNECTOR	FFC/FPC (1-15)	
CN2	QGB1214J1-08S	CONNECTOR	B-B (1-8)	
CN3	QGB1214K1-08S	CONNECTOR	B-B (1-8)	
SW1	QSW0844-001	PUSH SWITCH		
SW2	QSW0844-001	PUSH SWITCH		
SW3	QSW0844-001	PUSH SWITCH		
SW4	QSW0844-001	PUSH SWITCH		
SW5	QSW0844-001	PUSH SWITCH		
SW6	QSW0854-002	PUSH SW		
SW7	QSW0886-002	DETECT SWITCH		
SW8	QSW0886-002	DETECT SWITCH		

DVD servo board (FMU-SD9-5M)

Block No. [0][7][0][0]

⚠ Symbol No.	Part No.	Part Name	Description	Local
IC201	LA6502-X	IC		
IC301	MN2DS0004AA-H	IC		
IC302	BA00HC5WF-X	IC		
IC305	MM1563DF-X	IC	3.3V Regulator	
IC451	MN101C61GNE1	IC(MCU)		
IC452	BR93L56RFV-W-X	IC		
IC453	S-80827CNNB-W	IC		
IC505	K4S643232F-TC60	IC		
IC509	AT49BV322AT70TI	IC(FLASH)		
IC512	SN74LVC373APW-X	IC(DIGITAL)		
IC513	SN74LVC373APW-X	IC(DIGITAL)		
IC701	AK4384VT-X	IC		
IC702	AK4384VT-X	IC		
IC703	AK4384VT-X	IC		
IC704	CS5342-CZZ-X	IC(DIGITAL)		
IC705	MM1615AN-X	IC		
Q101	KTA1001/Y/-X	TRANSISTOR		
Q102	2SC4617/R/-X	TRANSISTOR		
Q103	KTA1001/Y/-X	TRANSISTOR		
Q104	2SC4617/R/-X	TRANSISTOR		
Q105	UN2119-X	TRANSISTOR		
C101	NCF31CZ-104X	C CAPACITOR	0.1uF 16V Z	
C102	NCF31CZ-104X	C CAPACITOR	0.1uF 16V Z	
C103	NCF31CZ-104X	C CAPACITOR	0.1uF 16V Z	
C104	NCF31CZ-104X	C CAPACITOR	0.1uF 16V Z	
C105	NEA70JM-226X	E CAPACITOR	22uF 6.3V M	

⚠ Symbol No.	Part No.	Part Name	Description	Local
C106	NEA70JM-476X	E CAPACITOR	47uF 6.3V M	
C107	NCF31CZ-104X	C CAPACITOR	0.1uF 16V Z	
C108	NEA70JM-476X	E CAPACITOR	47uF 6.3V M	
C204	NCF31CZ-104X	C CAPACITOR	0.1uF 16V Z	
C205	NCB31HK-271X	C CAPACITOR	270pF 50V K	
C206	NDC31HJ-151X	C CAPACITOR	150pF 50V J	
C211	NCB31CK-223X	C CAPACITOR	0.022uF 16V K	
C217	NCF31CZ-104X	C CAPACITOR	0.1uF 16V Z	
C251	NCB31AK-474X	C CAPACITOR	0.47uF 10V K	
C256	NCB31CK-104X	C CAPACITOR	0.1uF 16V K	
C257	NCB31HK-822X	C CAPACITOR	8200pF 50V K	
C258	NCB31CK-153X	C CAPACITOR	0.015uF 16V K	
C259	NCB31CK-153X	C CAPACITOR	0.015uF 16V K	
C260	NCB31HK-223X	C CAPACITOR	0.022uF 50V K	
C261	NCB31HK-223X	C CAPACITOR	0.022uF 50V K	
C262	NCB31HK-223X	C CAPACITOR	0.022uF 50V K	
C300	NCF31CZ-104X	C CAPACITOR	0.1uF 16V Z	
C301	NEA70GM-227X	E CAPACITOR	220uF 4V M	
C302	NEA70GM-476X	E CAPACITOR	47uF 4V M	
C303	NBE20JM-476X	TA E CAPACITOR	47uF 6.3V M	
C304	NCB30JK-105X	C CAPACITOR	1uF 6.3V K	
C305	NCF31CZ-104X	C CAPACITOR	0.1uF 16V Z	
C306	NCF31CZ-104X	C CAPACITOR	0.1uF 16V Z	
C307	NCF31CZ-104X	C CAPACITOR	0.1uF 16V Z	
C308	NCF31CZ-104X	C CAPACITOR	0.1uF 16V Z	
C309	NCF31CZ-104X	C CAPACITOR	0.1uF 16V Z	
C310	NCB31CK-104X	C CAPACITOR	0.1uF 16V K	
C311	NCF31CZ-104X	C CAPACITOR	0.1uF 16V Z	
C312	NCF31CZ-104X	C CAPACITOR	0.1uF 16V Z	
C313	NCF31CZ-104X	C CAPACITOR	0.1uF 16V Z	
C314	NCB31CK-104X	C CAPACITOR	0.1uF 16V K	
C315	NCF31CZ-104X	C CAPACITOR	0.1uF 16V Z	
C316	NCB31CK-104X	C CAPACITOR	0.1uF 16V K	
C317	NCF31CZ-104X	C CAPACITOR	0.1uF 16V Z	
C318	NCF31CZ-104X	C CAPACITOR	0.1uF 16V Z	
C319	NCB31CK-104X	C CAPACITOR	0.1uF 16V K	
C320	NCB31CK-104X	C CAPACITOR	0.1uF 16V K	
C321	NCB31CK-104X	C CAPACITOR	0.1uF 16V K	
C322	NCB31CK-104X	C CAPACITOR	0.1uF 16V K	
C323	NCB31CK-104X	C CAPACITOR	0.1uF 16V K	
C324	NCB30JK-105X	C CAPACITOR	1uF 6.3V K	
C325	NDC31HJ-180X	C CAPACITOR	18pF 50V J	
C326	NDC31HJ-150X	C CAPACITOR	15pF 50V J	
C328	NCB30JK-105X	C CAPACITOR	1uF 6.3V K	
C329	NCF31CZ-104X	C CAPACITOR	0.1uF 16V Z	
C330	NCF31CZ-104X	C CAPACITOR	0.1uF 16V Z	
C331	NCB31CK-333X	C CAPACITOR	0.033uF 16V K	
C332	NCB31CK-104X	C CAPACITOR	0.1uF 16V K	
C333	NCB31CK-104X	C CAPACITOR	0.1uF 16V K	
C334	NCB31CK-104X	C CAPACITOR	0.1uF 16V K	
C335	NCF31CZ-104X	C CAPACITOR	0.1uF 16V Z	
C336	NBE20JM-226X	TA E CAPACITOR	22uF 6.3V M	
C337	NCB31CK-183X	C CAPACITOR	0.018uF 16V K	
C338	NCB31HK-562X	C CAPACITOR	5600pF 50V K	
C339	NCF31CZ-104X	C CAPACITOR	0.1uF 16V Z	
C340	NCB30JK-105X	C CAPACITOR	1uF 6.3V K	
C341	NCB30JK-105X	C CAPACITOR	1uF 6.3V K	
C347	NCB31CK-104X	C CAPACITOR	0.1uF 16V K	
C348	NCB31CK-104X	C CAPACITOR	0.1uF 16V K	
C349	NCF31CZ-104X	C CAPACITOR	0.1uF 16V Z	
C350	NCB31CK-104X	C CAPACITOR	0.1uF 16V K	
C351	NCB31CK-103X	C CAPACITOR	0.01uF 16V K	
C352	NCB31CK-153X	C CAPACITOR	0.015uF 16V K	
C353	NCB31HK-561X	C CAPACITOR	560pF 50V K	
C354	NCB31HK-561X	C CAPACITOR	560pF 50V K	
C356	NCB21CK-105X	C CAPACITOR	1uF 16V K	
C359	NCB30JK-105X	C CAPACITOR	1uF 6.3V K	
C371	NCF31AZ-105X	C CAPACITOR	1uF 10V Z	
C380	NCB21CK-105X	C CAPACITOR	1uF 16V K	
C381	NCB21AK-225X	C CAPACITOR	2.2uF 10V K	
C382	NCB31HK-471X	C CAPACITOR	470pF 50V K	
C391	NCF31CZ-104X	C CAPACITOR	0.1uF 16V Z	
C451	NCF31CZ-104X	C CAPACITOR	0.1uF 16V Z	
C452	NCB31CK-104X	C CAPACITOR	0.1uF 16V K	
C453	NCF31CZ-104X	C CAPACITOR	0.1uF 16V Z	
C454	NCB31CK-103X	C CAPACITOR	0.01uF 16V K	
C455	NCB31CK-103X	C CAPACITOR	0.01uF 16V K	
C551	NCF31CZ-104X	C CAPACITOR	0.1uF 16V Z	

⚠ Symbol No.	Part No.	Part Name	Description	Local
C552	NCF31CZ-104X	C CAPACITOR	0.1uF 16V Z	
C553	NCF31CZ-104X	C CAPACITOR	0.1uF 16V Z	
C554	NCF31CZ-104X	C CAPACITOR	0.1uF 16V Z	
C555	NCF31CZ-104X	C CAPACITOR	0.1uF 16V Z	
C556	NCF31AZ-105X	C CAPACITOR	1uF 10V Z	
C557	NCF31CZ-104X	C CAPACITOR	0.1uF 16V Z	
C558	NEA70GM-476X	E CAPACITOR	47uF 4V M	
C701	NCB21CK-105X	C CAPACITOR	1uF 16V K	
C702	NCB31CK-103X	C CAPACITOR	0.01uF 16V K	
C703	NCB30JK-105X	C CAPACITOR	1uF 6.3V K	
C704	NCF21CZ-225X	C CAPACITOR	2.2uF 16V Z	
C705	NCF21CZ-225X	C CAPACITOR	2.2uF 16V Z	
C706	NCF21CZ-225X	C CAPACITOR	2.2uF 16V Z	
C707	NCF21CZ-225X	C CAPACITOR	2.2uF 16V Z	
C708	NCF21CZ-225X	C CAPACITOR	2.2uF 16V Z	
C709	NEA70JM-476X	E CAPACITOR	47uF 6.3V M	
C712	NCF31CZ-104X	C CAPACITOR	0.1uF 16V Z	
C713	NEA71CM-106X	E CAPACITOR	10uF 16V M	
C714	NCF31CZ-104X	C CAPACITOR	0.1uF 16V Z	
C715	NCF31CZ-104X	C CAPACITOR	0.1uF 16V Z	
C716	NCF31CZ-104X	C CAPACITOR	0.1uF 16V Z	
C717	NCF31CZ-104X	C CAPACITOR	0.1uF 16V Z	
C718	NCF31CZ-104X	C CAPACITOR	0.1uF 16V Z	
C722	NCB31CK-104X	C CAPACITOR	0.1uF 16V K	
R101	NRSA63J-101X	MG RESISTOR	100Ω 1/16W J	
R102	NRSA63J-101X	MG RESISTOR	100Ω 1/16W J	
R103	NRSA63J-243X	MG RESISTOR	24kΩ 1/16W J	
R104	NRSA63J-303X	MG RESISTOR	30kΩ 1/16W J	
R105	NRS125J-270X	MG RESISTOR	27Ω 1/2W J	
R106	NRSA63J-2R2X	MG RESISTOR	2.2Ω 1/16W J	
R107	NRSA63J-101X	MG RESISTOR	100Ω 1/16W J	
R108	NRSA63J-471X	MG RESISTOR	470Ω 1/16W J	
R109	NRSA63J-471X	MG RESISTOR	470Ω 1/16W J	
R110	NRSA63J-0R0X	MG RESISTOR	0Ω 1/16W J	
R111	NRSA63J-243X	MG RESISTOR	24kΩ 1/16W J	
R112	NRSA63J-303X	MG RESISTOR	30kΩ 1/16W J	
R113	NRSA02J-270X	MG RESISTOR	27Ω 1/10W J	
R114	NRSA63J-2R2X	MG RESISTOR	2.2Ω 1/16W J	
R115	NRSA63J-101X	MG RESISTOR	100Ω 1/16W J	
R116	NRSA63J-471X	MG RESISTOR	470Ω 1/16W J	
R117	NRSA63J-331X	MG RESISTOR	330Ω 1/16W J	
R118	NRSA63J-0R0X	MG RESISTOR	0Ω 1/16W J	
R119	NRSA63J-0R0X	MG RESISTOR	0Ω 1/16W J	
R120	NRSA63J-0R0X	MG RESISTOR	0Ω 1/16W J	
R122	NRSA63J-0R0X	MG RESISTOR	0Ω 1/16W J	
R123	NRSA63J-0R0X	MG RESISTOR	0Ω 1/16W J	
R125	NRSA02J-1R0X	MG RESISTOR	1Ω 1/10W J	
R126	NRSA02J-181X	MG RESISTOR	180Ω 1/10W J	
R127	NRSA63J-333X	MG RESISTOR	33kΩ 1/16W J	
R128	NRSA63J-163X	MG RESISTOR	16kΩ 1/16W J	
R204	NRSA63J-273X	MG RESISTOR	27kΩ 1/16W J	
R205	NRSA63J-273X	MG RESISTOR	27kΩ 1/16W J	
R206	NRSA63J-303X	MG RESISTOR	30kΩ 1/16W J	
R207	NRSA63J-473X	MG RESISTOR	47kΩ 1/16W J	
R213	NRSA63J-103X	MG RESISTOR	10kΩ 1/16W J	
R214	NRSA63J-103X	MG RESISTOR	10kΩ 1/16W J	
R219	NRSA63J-183X	MG RESISTOR	18kΩ 1/16W J	
R220	NRSA63J-243X	MG RESISTOR	24kΩ 1/16W J	
R221	NRSA63J-682X	MG RESISTOR	6.8kΩ 1/16W J	
R251	NRS125J-R47X	MG RESISTOR	0.47Ω 1/2W J	
R252	NRSA63J-2R2X	MG RESISTOR	2.2Ω 1/16W J	
R257	NRSA63J-0R0X	MG RESISTOR	0Ω 1/16W J	
R259	NRSA63J-103X	MG RESISTOR	10kΩ 1/16W J	
R301	NRSA63J-911X	MG RESISTOR	910Ω 1/16W J	
R302	NRSA63J-202X	MG RESISTOR	2kΩ 1/16W J	
R303	NRSA63J-101X	MG RESISTOR	100Ω 1/16W J	
R306	NRSA63J-102X	MG RESISTOR	1kΩ 1/16W J	
R307	NRSA63J-102X	MG RESISTOR	1kΩ 1/16W J	
R308	NRSA63J-223X	MG RESISTOR	22kΩ 1/16W J	
R309	NRSA63J-104X	MG RESISTOR	100kΩ 1/16W J	
R312	NRSA63J-0R0X	MG RESISTOR	0Ω 1/16W J	
R313	NRSA63J-0R0X	MG RESISTOR	0Ω 1/16W J	
R314	NRSA63J-0R0X	MG RESISTOR	0Ω 1/16W J	
R315	NRSA63J-0R0X	MG RESISTOR	0Ω 1/16W J	
R316	NRSA63J-0R0X	MG RESISTOR	0Ω 1/16W J	
R317	NRSA63J-0R0X	MG RESISTOR	0Ω 1/16W J	
R319	NRSA63J-0R0X	MG RESISTOR	0Ω 1/16W J	

⚠ Symbol No.	Part No.	Part Name	Description	Local
R320	NRSA63J-103X	MG RESISTOR	10kΩ 1/16W J	
R334	NRSA63J-151X	MG RESISTOR	150Ω 1/16W J	
R335	NRSA63J-151X	MG RESISTOR	150Ω 1/16W J	
R336	NRSA63J-151X	MG RESISTOR	150Ω 1/16W J	
R337	NRSA63J-151X	MG RESISTOR	150Ω 1/16W J	
R338	NRSA63J-0R0X	MG RESISTOR	0Ω 1/16W J	
R339	NRSA63J-0R0X	MG RESISTOR	0Ω 1/16W J	
R340	NRSA63D-303X	MG RESISTOR	30kΩ 1/16W D	
R341	NRSA63D-362X	MG RESISTOR	3.6kΩ 1/16W D	
R342	NRSA63D-222X	MG RESISTOR	2.2kΩ 1/16W D	
R345	NRSA63J-221X	MG RESISTOR	220Ω 1/16W J	
R346	NRSA63J-223X	MG RESISTOR	22kΩ 1/16W J	
R347	NRSA63J-203X	MG RESISTOR	20kΩ 1/16W J	
R348	NRSA63J-6R8X	MG RESISTOR	6.8Ω 1/16W J	
R351	NRSA63J-681X	MG RESISTOR	680Ω 1/16W J	
R352	NRSA63J-105X	MG RESISTOR	1MΩ 1/16W J	
R353	NRSA63J-101X	MG RESISTOR	100Ω 1/16W J	
R354	NRSA63J-101X	MG RESISTOR	100Ω 1/16W J	
R355	NRSA63J-331X	MG RESISTOR	330Ω 1/16W J	
R356	NRSA63J-331X	MG RESISTOR	330Ω 1/16W J	
R357	NRSA63J-221X	MG RESISTOR	220Ω 1/16W J	
R358	NRSA63J-221X	MG RESISTOR	220Ω 1/16W J	
R359	NRSA63J-221X	MG RESISTOR	220Ω 1/16W J	
R360	NRSA63J-221X	MG RESISTOR	220Ω 1/16W J	
R362	NRSA63J-331X	MG RESISTOR	330Ω 1/16W J	
R363	NRSA63J-151X	MG RESISTOR	150Ω 1/16W J	
R367	NRSA63J-221X	MG RESISTOR	220Ω 1/16W J	
R372	NRSA63J-103X	MG RESISTOR	10kΩ 1/16W J	
R373	NRSA63J-103X	MG RESISTOR	10kΩ 1/16W J	
R380	NRSA63J-473X	MG RESISTOR	47kΩ 1/16W J	
R384	NRSA63J-102X	MG RESISTOR	1kΩ 1/16W J	
R385	NRSA63J-102X	MG RESISTOR	1kΩ 1/16W J	
R392	NRSA63J-103X	MG RESISTOR	10kΩ 1/16W J	
R393	NRSA63J-0R0X	MG RESISTOR	0Ω 1/16W J	
R394	NRSA63J-0R0X	MG RESISTOR	0Ω 1/16W J	
R395	NRSA63J-472X	MG RESISTOR	4.7kΩ 1/16W J	
R452	NRSA63J-222X	MG RESISTOR	2.2kΩ 1/16W J	
R453	NRSA63J-103X	MG RESISTOR	10kΩ 1/16W J	
R454	NRSA63J-103X	MG RESISTOR	10kΩ 1/16W J	
R455	NRSA63J-103X	MG RESISTOR	10kΩ 1/16W J	
R456	NRSA63J-103X	MG RESISTOR	10kΩ 1/16W J	
R457	NRSA63J-0R0X	MG RESISTOR	0Ω 1/16W J	
R458	NRSA63J-102X	MG RESISTOR	1kΩ 1/16W J	
R530	NRSA63J-103X	MG RESISTOR	10kΩ 1/16W J	
R535	NRSA63J-473X	MG RESISTOR	47kΩ 1/16W J	
R561	NRSA63J-102X	MG RESISTOR	1kΩ 1/16W J	
R562	NRSA63J-101X	MG RESISTOR	100Ω 1/16W J	
R701	NRSA63J-0R0X	MG RESISTOR	0Ω 1/16W J	
R702	NRSA63J-2R2X	MG RESISTOR	2.2Ω 1/16W J	
R703	NRSA63J-471X	MG RESISTOR	470Ω 1/16W J	
R704	NRSA63J-471X	MG RESISTOR	470Ω 1/16W J	
R705	NRSA63J-471X	MG RESISTOR	470Ω 1/16W J	
R706	NRSA63J-471X	MG RESISTOR	470Ω 1/16W J	
R707	NRSA63J-471X	MG RESISTOR	470Ω 1/16W J	
R708	NRSA63J-471X	MG RESISTOR	470Ω 1/16W J	
R710	NQR0129-002X	FERRITE BEADS		
R714	NRSA63J-221X	MG RESISTOR	220Ω 1/16W J	
R715	NRSA63J-221X	MG RESISTOR	220Ω 1/16W J	
R716	NRSA63J-221X	MG RESISTOR	220Ω 1/16W J	
R717	NRSA63J-473X	MG RESISTOR	47kΩ 1/16W J	
R718	NRSA63J-103X	MG RESISTOR	10kΩ 1/16W J	
R719	NRSA63J-5R1X	MG RESISTOR	5.1Ω 1/16W J	
R720	NRSA63J-473X	MG RESISTOR	47kΩ 1/16W J	
R722	NRSA63J-0R0X	MG RESISTOR	0Ω 1/16W J	
R741	NQR0129-002X	FERRITE BEADS		
R742	NQR0129-002X	FERRITE BEADS		
R743	NQR0129-002X	FERRITE BEADS		
R744	NQR0129-002X	FERRITE BEADS		
CN101	QGF0523F1-24W	CONNECTOR	FFC/FPC (1-24)	
CN201	QGF1016F2-08W	CONNECTOR	FFC/FPC (1-8)	
CN451	QGF1016F2-15W	CONNECTOR	FFC/FPC (1-15)	
CN452	QGA2001F2-02X	CONNECTOR	W-B (1-2)	
CN453	QGA2001F2-03X	CONNECTOR	W-B (1-3)	
CN701	QGF1016F2-10W	CONNECTOR	FFC/FPC (1-10)	
CN702	QGF1016F2-08W	CONNECTOR	FFC/FPC (1-8)	
CN703	QGF1016F2-28W	CONNECTOR	FFC/FPC (1-28)	
K101	NRSA02J-0R0X	MG RESISTOR	0Ω 1/10W J	

⚠ Symbol No.	Part No.	Part Name	Description	Local
K102	NRSA02J-0R0X	MG RESISTOR	0Ω 1/10W J	
K350	NQR0354-001X	FERRITE BEADS		
K352	NQR0354-001X	FERRITE BEADS		
K451	NRSA63J-0R0X	MG RESISTOR	0Ω 1/16W J	
K551	NQR0129-002X	FERRITE BEADS		
K552	NQR0129-002X	FERRITE BEADS		
K553	NQR0129-002X	FERRITE BEADS		
K554	NQR0129-002X	FERRITE BEADS		
K555	NQR0022-005X	FERRITE BEADS		
K556	NQR0129-002X	FERRITE BEADS		
K562	NRSA63J-0R0X	MG RESISTOR	0Ω 1/16W J	
K566	NRSA63J-0R0X	MG RESISTOR	0Ω 1/16W J	
TH301	NAD0025-103X	N THERMISTOR	10kΩ	
X351	NAX0550-001X	CRYSTAL	27.000MHz	
X451	NAX0248-001X	C OSCILLATOR		

DVD loading board (FMU-SD9-5M)

Block No. [0][8][0][0]

⚠ Symbol No.	Part No.	Part Name	Description	Local
IC1	LB1641	IC		
IC2	LB1641	IC		
D1	MTZJ6.2A-T2	Z DIODE		
C1	QEKC1AM-107Z	E CAPACITOR	100uF 10V M	
C2	QCFB1HZ-104Y	C CAPACITOR	0.1uF 50V Z	
C3	QFLC1HJ-103Z	M CAPACITOR	0.01uF 50V J	
C5	QFLC1HJ-103Z	M CAPACITOR	0.01uF 50V J	
C6	QCFB1HZ-104Y	C CAPACITOR	0.1uF 50V Z	
C7	QCFB1HZ-104Y	C CAPACITOR	0.1uF 50V Z	
CN1	QGF1036F1-15	CONNECTOR	FFC/FPC (1-15)	
CN2	QGB2024K1-07S	CONNECTOR	B-B (1-7)	
CN3	QGB2024J1-07S	CONNECTOR	B-B (1-7)	
SW1	QSW0844-001	PUSH SWITCH		
SW2	QSW0844-001	PUSH SWITCH		
SW3	QSW0844-001	PUSH SWITCH		
SW4	QSW0844-001	PUSH SWITCH		
SW5	QSW0844-001	PUSH SWITCH		
SW6	QSW0854-002	PUSH SW		
SW8	QSW0923-001	DETECT SWITCH		

Packing materials and accessories parts list

Block No. M 3 M M

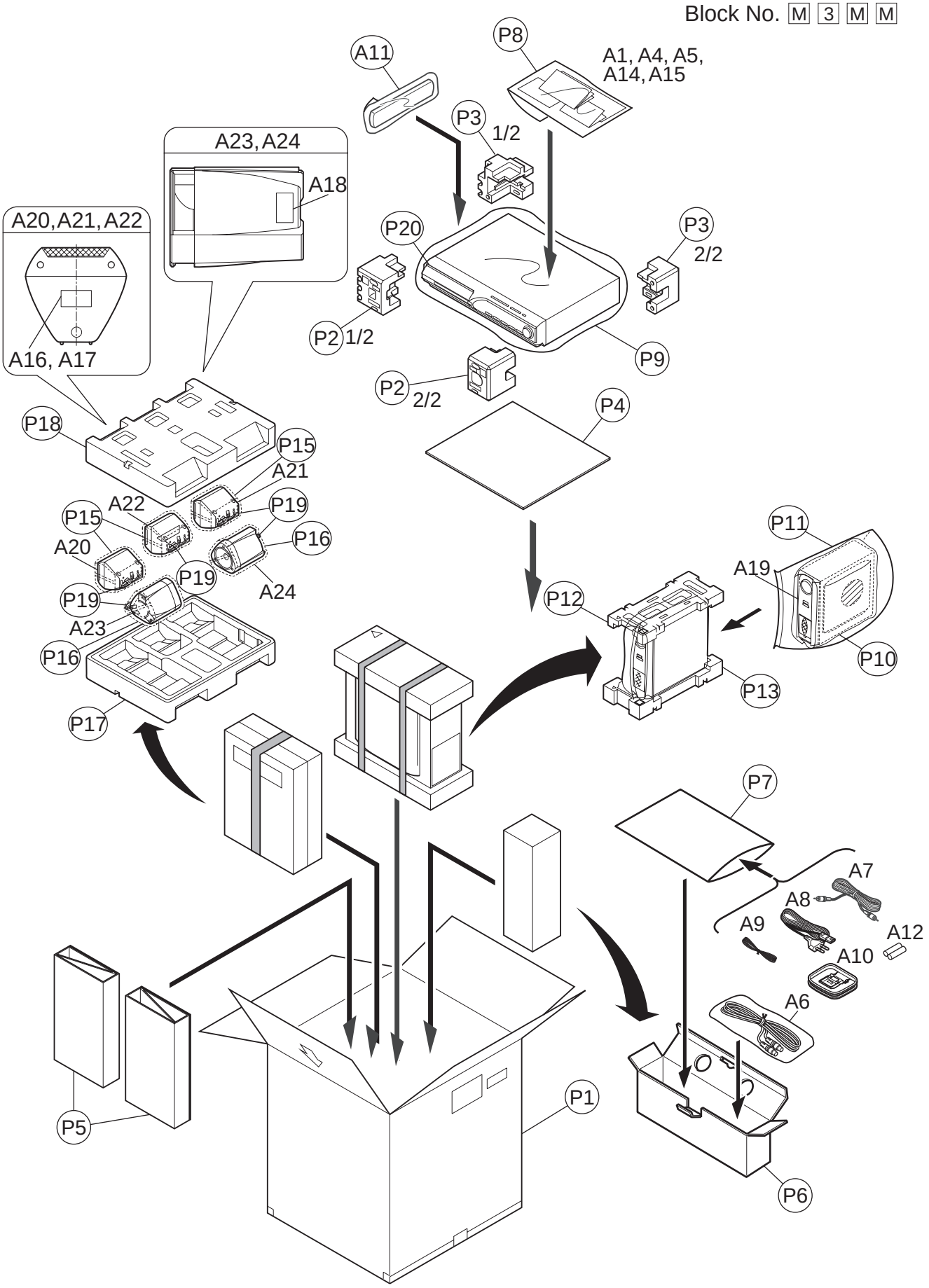

Packing and accessories

Block No. [M][3][M][M]

⚠ Symbol No.	Part No.	Part Name	Description	Local
A 1	LVT1147-001B	INST BOOK	ENG	M303C
A 1	LVT1147-001A	INST BOOK	ENG	M301J, M303J
A 4	YU20333	SAFETY INST.		
A 5	BT-51034-1	J=REGIST CARD		M301J, M303J
A 6	QAM0588-001	DIN CABLE		
A 7	QAM0236-001	VIDEO CABLE		
⚠ A 8	QMPE090-183-JD	POWER CORD(US/CA)	1.83m BLACK	
A 9	QAL0457-001	ANT.WIRE		
A 10	QAL0014-001	AM LOOP ANT		
A 11	RM-STHM303J	REMOCON UNIT		
A 12	----------	BATTERY	(x2)	
A 14	LVT1147-002A	INST BOOK		M303C
A 15	BT-52006-2	WARRANTY CARD		M303C
A 16	6000206771	RATING LABEL		
A 17	6000206781	RATING LABEL		
A 18	6000206791	RATING LABEL		
A 19	SPPWM303E-SPBOX	SPEAKER BOX		
A 20	AB080050-01	SPEAKER BOX		
A 21	AB080050-02	SPEAKER BOX		
A 22	AB080051-01	SPEAKER BOX		
A 23	AB080052-01	SPEAKER BOX		
A 24	AB080052-02	SPEAKER BOX		
P 1	LV34821-002A	CARTON BOX		M301J
P 1	LV34822-004A	CARTON BOX		M303C, M303J
P 2	LV21730-001A	CUSHION FRONT		
P 3	LV21731-001A	CUSHION REAR		
P 4	LV35024-001A	CARTON SHEET		
P 5	LV35025-001A	CARTON SPACER	(x2)	
P 6	LV34595-001A	ACCESSORY BOX		
P 7	QPA02503503P	POLY BAG	25cm x 35cm	
P 8	QPA02503505P	POLY BAG	25cm x 35cm	
P 9	QPC05006515P	POLY BAG	50cm x 65cm	
P 10	8500051881	MIRROR MAT	LV34908-001A	
P 11	8500051901	POLY BAG	LV34907-001A	
P 12	8000055201	TOP CUSHION		
P 13	8000055211	BOTTOM CUSHION		
P 15	8500051971	POLY BAG	(x3)	
P 16	8500051981	POLY BAG	(x2)	
P 17	8000054411	BOTTOM CUSHION		
P 18	8000054401	TOP CUSHION		
P 19	8500052241	POLY BAG	(x5)	
P 20	LV43936-001A	PAPER SHEET		