XL-R5000BK

JVC

SERVICE MANUAL

CD/CDR MULTIPLE COMPACT DISC RECORDER

XL-R5000BK

Area Suffix

J ---------- U.S.A.
C ---------- Canada
B ---------- U.K.
E --- Continental Europe
EN --- Northern Europe

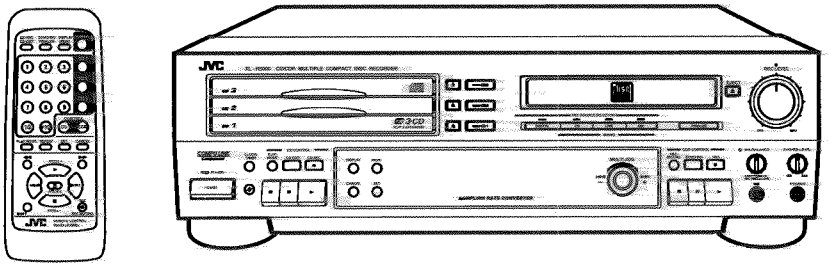

COMPU LINK Component

COMPACT disc DIGITAL AUDIO Recordable

COMPACT disc DIGITAL AUDIO ReWritable

COMPACT disc DIGITAL AUDIO

3-CD PLAY & EXCHANGE

Contents

Safety Precautions ---------- 1-2
Important for laser products ---------- 1-3
Instructions ---------- 1-5~18
Disassembly method ---------- 2-1
Check mode ---------- 2-13
Description of major ICs ---------- 2-15
Block diagram ---------- 2-26
Standard schematic diagrams ---------- 2-27
Printed circuit boards ---------- 2-31~33
Parts List ---------- 3-1~17

This service manual is made from 100% recycled paper.

No.20824
Apr. 2000

Safety Precautions

1. This design of this product contains special hardware and many circuits and components specially for safety purposes. For continued protection, no changes should be made to the original design unless authorized in writing by the manufacturer. Replacement parts must be identical to those used in the original circuits. Services should be performed by qualified personnel only.

2. Alterations of the design or circuitry of the product should not be made. Any design alterations of the product should not be made. Any design alterations or additions will void the manufacturer`s warranty and will further relieve the manufacture of responsibility for personal injury or property damage resulting therefrom.

3. Many electrical and mechanical parts in the products have special safety-related characteristics. These characteristics are often not evident from visual inspection nor can the protection afforded by them necessarily be obtained by using replacement components rated for higher voltage, wattage, etc. Replacement parts which have these special safety characteristics are identified in the Parts List of Service Manual. Electrical components having such features are identified by shading on the schematics and by (⚠) on the Parts List in the Service Manual. The use of a substitute replacement which does not have the same safety characteristics as the recommended replacement parts shown in the Parts List of Service Manual may create shock, fire, or other hazards.

4. The leads in the products are routed and dressed with ties, clamps, tubings, barriers and the like to be separated from live parts, high temperature parts, moving parts and/or sharp edges for the prevention of electric shock and fire hazard. When service is required, the original lead routing and dress should be observed, and it should be confirmed that they have been returned to normal, after re-assembling.

5. Leakage currnet check (Electrical shock hazard testing)
   After re-assembling the product, always perform an isolation check on the exposed metal parts of the product (antenna terminals, knobs, metal cabinet, screw heads, headphone jack, control shafts, etc.) to be sure the product is safe to operate without danger of electrical shock.
   Do not use a line isolation transformer during this check.
   - Plug the AC line cord directly into the AC outlet. Using a "Leakage Current Tester", measure the leakage current from each exposed metal parts of the cabinet , particularly any exposed metal part having a return path to the chassis, to a known good earth ground. Any leakage current must not exceed 0.5mA AC (r.m.s.)
   - Alternate check method
     Plug the AC line cord directly into the AC outlet. Use an AC voltmeter having, 1,000 ohms per volt or more sensitivity in the following manner. Connect a 1,500Ω 10W resistor paralleled by a 0.15μF AC-type capacitor between an exposed metal part and a known good earth ground.
     Measure the AC voltage across the resistor with the AC voltmeter.
     Move the resistor connection to eachexposed metal part, particularly any exposed metal part having a return path to the chassis, and meausre the AC voltage across the resistor. Now, reverse the plug in the AC outlet and repeat each measurement. voltage measured Any must not exceed 0.75 V AC (r.m.s.). This corresponds to 0.5 mA AC (r.m.s.).

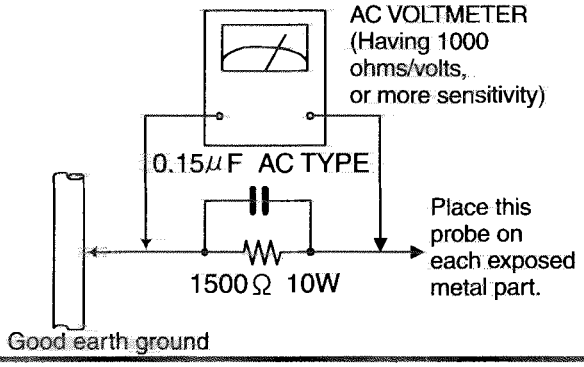

Warning

1. This equipment has been designed and manufactured to meet international safety standards.
2. It is the legal responsibility of the repairer to ensure that these safety standards are maintained.
3. Repairs must be made in accordance with the relevant safety standards.
4. It is essential that safety critical components are replaced by approved parts.
5. If mains voltage selector is provided, check setting for local voltage.

⚠ ***CAUTION*** **Burrs formed during molding may be left over on some parts of the chassis. Therefore, pay attention to such burrs in the case of preforming repair of this system.**

Safety precautions (U.K only)

1. This design of this product contains special hardware and many circuits and components specially for safety purposes. For continued protection, no changes should be made to the original design unless authorized in writing by the manufacturer. Replacement parts must be identical to those used in the original circuits.
2. Any unauthorised design alterations or additions will void the manufacturer's guarantee ; furthermore the manufacturer cannot accept responsibility for personal injury or property damage resulting therefrom.
3. Essential safety critical components are identified by (⚠) on the Parts List and by shading on the schematics, and must never be replaced by parts other than those listed in the manual. Please note however that many electrical and mechanical parts in the product have special safety related characteristics. These characteristics are often not evident from visual inspection. Parts other than specified by the manufacturer may not have the same safety characteristics as the recommended replacement parts shown in the Parts List of the Service Manual and may create shock, fire, or other hazards.
4. The leads in the products are routed and dressed with ties, clamps, tubings, barriers and the like to be separated from live parts, high temperature parts, moving parts and/or sharp edges for the prevention of electric shock and fire hazard. When service is required, the original lead routing and dress should be observed, and it should be confirmed that they have been returned to normal, after re-assembling.

Warning

1. Service should be performed by qualified personnel only.
2. This equipment has been designed and manufactured to meet international safety standards.
3. It is the legal responsibility of the repairer to ensure that these safety standards are maintained.
4. Repairs must be made in accordance with the relevant safety standards.
5. It is essential that safety critical components are replaced by approved parts.
6. If mains voltage selector is provided, check setting for local voltage.

⚠ ***CAUTION*** **Burrs formed during molding may be left over on some parts of the chassis. Therefore, pay attention to such burrs in the case of preforming repair of this system.**

Important for Laser Products

1.CLASS 1 LASER PRODUCT

2.DANGER : Invisible laser radiation when open and inter lock failed or defeated. Avoid direct exposure to beam.

3.CAUTION : There are no serviceable parts inside the Laser Unit. Do not disassemble the Laser Unit. Replace the complete Laser Unit if it malfunctions.

4.CAUTION : The compact disc player uses invisible laserradiation and is equipped with safety switches whichprevent emission of radiation when the drawer is open and the safety interlocks have failed or are de feated. It is dangerous to defeat the safety switches.

5.CAUTION : If safety switches malfunction, the laser is able to function.

6.CAUTION : Use of controls, adjustments or performance of procedures other than those specified herein may result in hazardous radiation exposure.

⚠ ***CAUTION*** **Please use enough caution not to see the beam directly or touch it in case of an adjustment or operation check.**

VARNING : Osynlig laserstrålning är denna del är öppnad och spärren är urkopplad. Betrakta ej strålen.

VARO : Avattaessa ja suojalukitus ohitettaessa olet alttiina näkymättömälle lasersäteilylle.Älä katso säteeseen.

ADVARSEL : Usynlig laserstråling ved åbning , når sikkerhedsafbrydere er ude af funktion. Undgå udsættelse for stråling.

ADVARSEL : Usynlig laserstråling ved åpning,når sikkerhetsbryteren er avslott. unngå utsettelse for stråling.

REPRODUCTION AND POSITION OF LABELS

WARNING LABEL

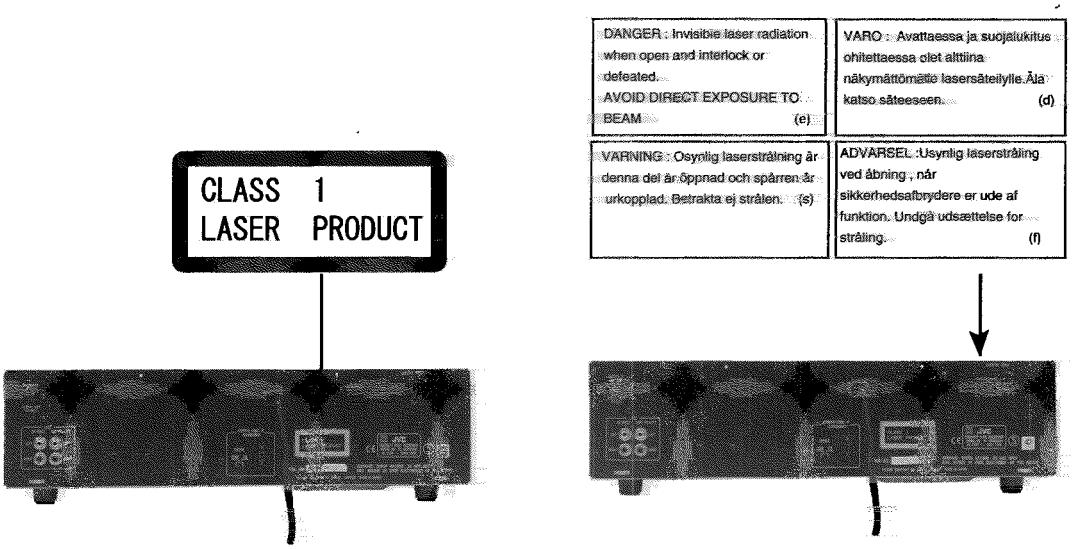

Importance administering point on the safety

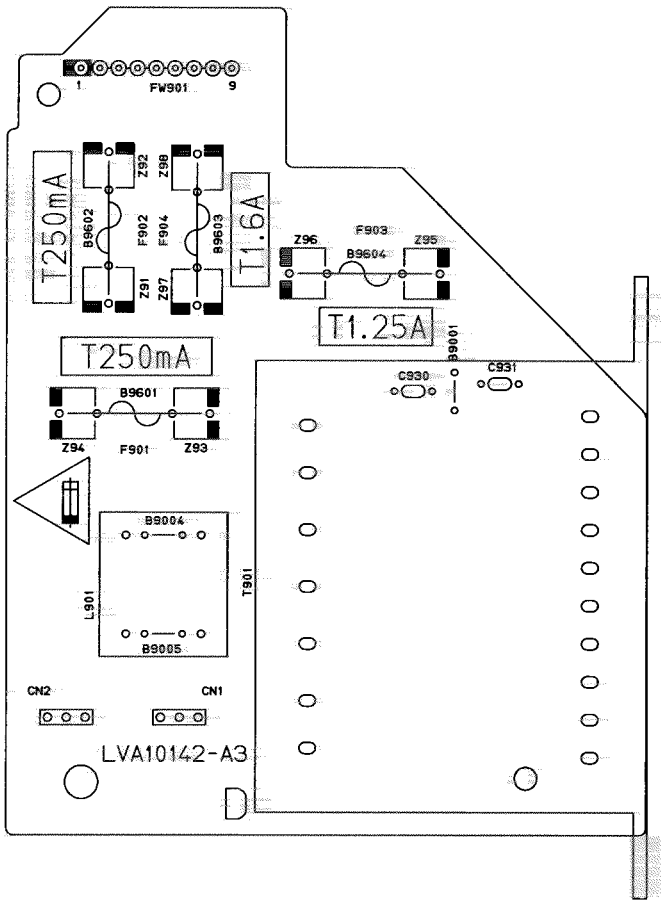

For USA and Canada / pour États - Unis d' Amérique et Canada

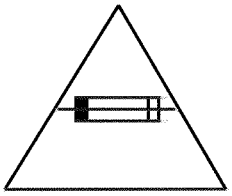

Caution: For continued protection against risk of fire, replace only with same type 250mA/125V for F901 and F902,1.25A/125 for F903. This symbol specifies type of fast operating fuse.

Précaution: Pour eviter risques de feux, remplacez le fusible de sureté de F903 comme le meme type que 1.25A/125V, et 250mA/125V pour F901 et F902. Ce sont des fusibles sûretes qui functionnes rapide.

Preventing static electricity

Electrostatic discharge (ESD), which occurs when static electricity stored in the body, fabric, etc. is discharged, can destroy the laser diode in the traverse unit (optical pickup). Take care to prevent this when performing repairs.

1.1. Grounding to prevent damage by static electricity

Static electricity in the work area can destroy the optical pickup (laser diode) in devices such as DVD players. Be careful to use proper grounding in the area where repairs are being performed.

1.1.1. Ground the workbench

1. Ground the workbench by laying conductive material (such as a conductive sheet) or an iron plate over it before placing the traverse unit (optical pickup) on it.

1.1.2. Ground yourself

1. Use an anti-static wrist strap to release any static electricity built up in your body.

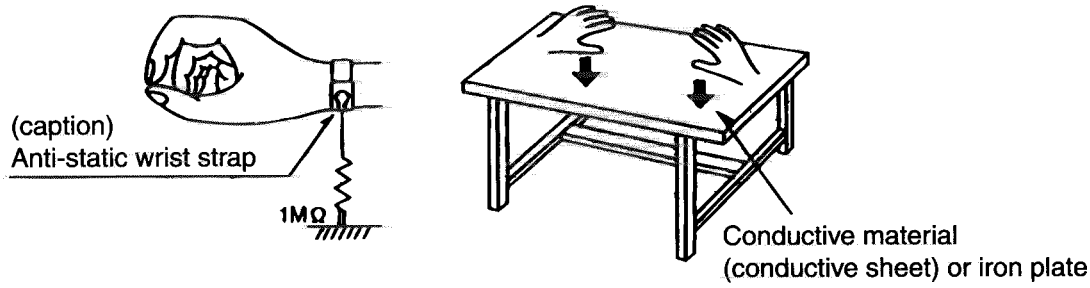

1.1.3. Handling the optical pickup

1. In order to maintain quality during transport and before installation, both sides of the laser diode on the replacement optical pickup are shorted. After replacement, return the shorted parts to their original condition. (Refer to the text.)

2. Do not use a tester to check the condition of the laser diode in the optical pickup. The tester's internal power source can easily destroy the laser diode.

1.2. Handling the traverse unit (optical pickup)

1. Do not subject the traverse unit (optical pickup) to strong shocks, as it is a sensitive, complex unit.

2. Cut off the shorted part of the flexible cable using nippers, etc. after replacing the optical pickup. For specific details, refer to the replacement procedure in the text. Remove the anti-static pin when replacing the traverse unit. Be careful not to take too long a time when attaching it to the connector.

3. Handle the flexible cable carefully as it may break when subjected to strong force.

4. It is not possible to adjust the semi-fixed resistor that adjusts the laser power. Do not turn it

Instructions

CD/CDR MULTIPLE COMPACT DISC RECORDER

XL-R5000BK

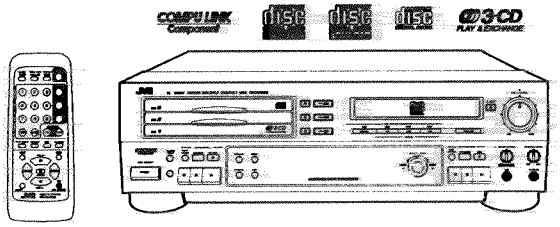

INSTRUCTIONS

For Customer Use:
Enter below the Model No. and Serial No. which are located on the rear, bottom or side of the cabinet. Retain this information for future reference.

Model No.

Serial No.

LVT0452-001A
[J/C/E/U]

Warnings, Cautions and Others

For U.S.A.
This equipment has been tested and found to comply with the limits for a Class B digital device, pursuant to part 15 of the FCC Rules. These limits are designed to provide reasonable protection against harmful interference in a residential installation.
This equipment generates, uses, and can radiate radio frequency energy and, if not installed and used in accordance with the instructions, may cause harmful interference to radio communications. However, there is no guarantee that interference will not occur in a particular installation. If this equipment does cause harmful interference to radio or television reception, which can be determined by turning the equipment off and on, the user is encouraged to try to correct the interference by one or more of the following measures:
Reorient or relocate the receiving antenna.
Increase the separation between the equipment and receiver.
Connect the equipment into an outlet on a circuit different from that to which the receiver is connected.
Consult the dealer or an experienced radio/TV technician for help.

CAUTION
RISK OF ELECTRIC SHOCK
DO NOT OPEN
CAUTION: TO REDUCE THE RISK OF ELECTRIC SHOCK, DO NOT REMOVE COVER (OR BACK). NO USER SERVICEABLE PARTS INSIDE. REFER SERVICING TO QUALIFIED SERVICE PERSONNEL.

The lightning flash with arrowhead symbol, within an equilateral triangle is intended to alert the user to the presence of uninsulated "dangerous voltage" within the product's enclosure that may be of sufficient magnitude to constitute a risk of electric shock to persons.

The exclamation point within an equilateral triangle is intended to alert the user to the presence of important operating and maintenance (servicing) instructions in the literature accompanying the appliance.

IMPORTANT for the U.K.

DO NOT cut off the mains plug from this equipment. If the plug fitted is not suitable for the power points in your home or the cable is too short to reach a power point, then obtain an appropriate safety approved extension lead or consult your dealer.

BE SURE to replace the fuse only with an identical approved type, as originally fitted.

If nonetheless the mains plug is cut off ensure to remove the fuse and dispose of the plug immediately, to avoid a possible shock hazard by inadvertent connection to the mains supply.

If this product is not supplied fitted with a mains plug then follow the instructions given below:

IMPORTANT:

DO NOT make any connection to the terminal which is marked with the letter E or by the safety earth symbol or coloured green or green-and-yellow.

The wires in the mains lead on this product are coloured in accordance with the following code:

Blue : Neutral
Brown : Live

As these colours may not correspond with the coloured markings identifying the terminals in your plug proceed as follows:

The wire which is coloured blue must be connected to the terminal which is marked with the letter N or coloured black.

The wire which is coloured brown must be connected to the terminal which is marked with the letter L or coloured red.

IF IN DOUBT - CONSULT A COMPETENT ELECTRICIAN.

WARNING: TO REDUCE THE RISK OF FIRE OR ELECTRIC SHOCK, DO NOT EXPOSE THIS APPLIANCE TO RAIN OR MOISTURE.

G-1

For Canada & USA

Caution — POWER switch!
Disconnect the mains plug to shut the power off completely. The POWER switch in any position does not disconnect the mains line. The power can be remote controlled.

Attention — Commutateur POWER!
Déconnecter la fiche de secteur pour couper complètement le courant. Le commutateur POWER ne coupe jamais complètement la ligne de secteur, quelle que soit sa position. Le courant peut être télécommandé modèle.

For other countries

Caution — O/I switch!
Disconnect the mains plug to shut the power off completely. The switch in any position does not disconnect the mains line. The power can be remote controlled.

For Canada/pour le Canada
THIS DIGITAL APPARATUS DOES NOT EXCEED THE CLASS B LIMITS FOR RADIO NOISE EMISSIONS FROM DIGITAL APPARATUS AS SET OUT IN THE INTERFERENCE-CAUSING EQUIPMENT STANDARD ENTITLED "DIGITAL APPARATUS", ICES-003 OF THE DEPARTMENT OF COMMUNICATIONS.
CET APPAREIL NUMERIQUE RESPECTE LES LIMITES DE BRUITS RADIOELECTRIQUES APPLICABLES AUX APPAREILS NUMERIQUES DE CLASSE B PRESCRITES DANS LA NORME SUR LE MATERIEL BROUILLEUR: "APPAREILS NUMERIQUES", NMB-003 EDICTEE PAR LE MINISTRE DES COMMUNICATIONS.

CAUTION
To reduce the risk of electrical shocks, fire, etc.:
1. Do not remove screws, covers or cabinet.
2. Do not expose this appliance to rain or moisture.

ATTENTION
Afin d'éviter tout risque d'électrocution, d'incendie, etc.:
1. Ne pas enlever les vis ni les panneaux et ne pas ouvrir le coffret de l'appareil.
2. Ne pas exposer l'appareil à la pluie ni à l'humidité.

For Canada/pour le Canada
CAUTION: TO PREVENT ELECTRIC SHOCK, MATCH WIDE BLADE OF PLUG TO WIDE SLOT, FULLY INSERT.
ATTENTION: POUR EVITER LES CHOCS ELECTRIQUES, INTRODUIRE LA LAME LA PLUS LARGE DE LA FICHE DANS LA BORNE CORRESPONDANTE DE LA PRISE ET POUSSER JUSQUAU FOND.

G-2

REPRODUCTION OF LABELS (Except for Canada & USA)

1. CLASSIFICATION LABEL, PLACED ON REAR ENCLOSURE

CLASS 1
LASER PRODUCT

2. WARNING LABEL, PLACED INSIDE THE UNIT

IMPORTANT FOR LASER PRODUCTS
IMPORTANT POUR LES PRODUITS LASER

(For Canada & USA)
1. CLASS 1 LASER PRODUCT
2. **DANGER:** Invisible laser radiation when open and interlock failed or defeated. Avoid direct exposure to beam.
3. **CAUTION:** Do not open the top cover. There are no user serviceable parts inside the Unit; leave all servicing to qualified service personnel.

1. PRODUIT LASER CLASSE 1.
2. **ATTENTION:** Radiation laser visible quand l'appareil est ouvert ou que le verrouillage est en panne ou désactivé. Evitar une exposition directe au rayon.
3. **ATTENTION:** Ne pas ouvrir le couvercle du dessus. Il n'y a aucune pièce utilisable à l'intérieur. Laisser à un personnel qualifié le soin de réparer votre appareil.

(For other countries)
1. CLASS 1 LASER PRODUCT
2. **CAUTION:** Invisible laser radiation when open and interlock failed or defeated. Avoid direct exposure to beam.
3. **CAUTION:** Do not open the top cover. There are no user serviceable parts inside the Unit; leave all servicing to qualified service personnel.

G-3

Caution: Proper Ventilation

To avoide risk of electric shock and fire and to protect from damage, locate the apparatus as follows:

Front:	No obstructions open spacing.
Sides:	No obstructions in 3 cm from the sides.
Top:	No obstructions in 5 cm from the top.
Back:	No obstructions in 15 cm from the back.
Bottom:	No obstructions, place on the level surface.

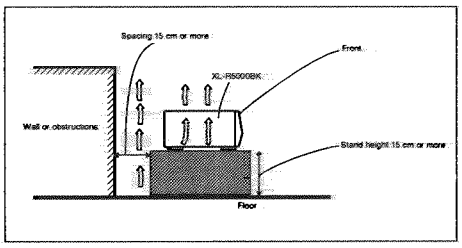

Table of Contents

Table of Contents 1
Precautions 2
Features 2
Connections 3
- Analog Connections 3
- Digital Connections 4

Names of the Parts 5
- Main Unit 5
- Display Window 7
- Remote Control 8

Using the Remote Control 9
- Installing the batteries 9
- How to use the remote control correctly 9

Power ON/STANDBY Operations 10
- Turning the power on and putting in standby 10

Listening to CDs 11
- Continuous Playback of the 3-CD Changer (playing the loaded discs through once each) 11
- CDR Playback Operations 12
- Using the Remote Control to Control Playback 12
- Direct Playback from a Specific Track 13
- Forward and Reverse Search 13
- Skipping Tracks 14
- Repeat Playback 14
- Random Playback 15
- CD Playback Pitch Control 15
- Disc Lock Function 15
- Program Playback 16
- Program playback using the remote control 17

Recording onto CD-R and CD-RW 18
- Manual Recording 18
- Synchronized Recording of 3-CD Changer Playback 20
- Listening Edit Recording 21
- Program Edit Recording 22
- 3-CD Changer to CDR Recording Options 23
- Setting the auto track spacing function 24
- Synchronized Start Recording of External Components 25
- Mixed Input Recording 26

Special Recording Edit Operations 27
- Skipping a Recorded Track on a CD-R or CD-RW (Track Skip) 27
- Erasing a track or tracks (ERASE function) 27
- Erasing all the tracks (DISC ERASE function) 28
- Finalization 29
- Making recording possible again on a finalized CD-RW (UNFINALIZE function) 30
- Bypassing the FS Converter (Sampling Frequency Converter) for More Efficient Digital Recording 30
- Setting Up Synchronized Start Recording for External Digital Sources (CD, MD, and DAT only) 31
- Resetting the Unit to the Factory Default Settings 32

Setting the Clock 33
- Setting the Present Time 33

Timer Operations 34
- Timer Play (wake-up play) 34
- Timer Recording (unattended recording of the sound from a broadcast receiver or other component) 35

COMPU LINK Function 37
CDR Messages 38
Restriction on Copying Digital Material 39
- SCMS (Serial Copy Management System) 39

Troubleshooting 40
Main Specifications 41

Precautions

Thank you for purchasing this JVC product. Please read these instructions through carefully before starting operation to ensure that you will derive the optimum performance and a long service life from your unit.

Safeguarding against electric shocks, fire hazards and damage

1) A very low current will still flow even when the POWER (for Canada and U.S.A. ⏻/I (for other countries) button is set at STANDBY. To save power and ensure safety when the unit is not going to be used for an extended period of time, disconnect the power cords from the household AC outlet. (See page 10)
2) Do not handle the power cord with wet hands.
3) To unplug the power cord from the household AC outlet, always take hold of the molded plug part and pull the plug free rather than pulling the cord.
4) If the power cord is damaged or found to have a disconnected wire or a contact failure, consult your dealer.
5) Do not bend the cord at a sharp angle, and do not pull or twist it.
6) Do not modify the power cord in any way.
7) Do not remove the screws in order to disassemble the unit, and do not touch any of the parts inside the unit.
8) Do not insert metallic objects into the unit.
9) Unplug the power cord during electrical storms.
10) If water should find its way inside the unit, unplug the power cord from the outlet, and consult your dealer.
11) Do not install the unit in a poorly ventilated location.

Installation

1) Avoid placing the unit on or adjacent to an amplifier. This is to prevent the humming caused by the unit's proximity to some types of amplifiers. Move the unit where it will not be affected by the amplifier.
2) Avoid installing the unit where the ambient temperature will exceed 35 °C (namely, in direct sunlight, near a heating appliance, etc.) or drop below 5 °C, where it is very humid or dusty, or where the unit will be subject to vibration.
3) The unit may not function properly if it is moved suddenly from a cold place (0 °C) to a warm place since condensation may form inside the unit. In such a case, leave the unit standing for about a couple of hours, after which time it should function properly.

Disc care

- Storing CDs
  - Always ensure that each CD is stored in its own case.
  - Do not place CDs in direct sunlight, near a heating appliance or any other location which is susceptible to high temperatures.
- If cellophane tape, an adhesive sticker or some other form of glue is present on the label side, clean it off before use.
- Do not stick adhesive labels or write anything on a CD.
- Do not bend CDs.
- Do NOT insert shaped CDs, such as CDs in a heart, flower or other shape, because their shape does not match the shape of the CD tray, and using them will give rise to malfunctioning.

Cleaning the cabinet

Never use benzine or paint thinners to clean the cabinet as they may mar the unit's surface finish.

Features

All of the functions and conveniences of having a 3-CD changer and CDR in a single combination deck:

- 3-CD changer compatible with CD-RW
- CDR capable of performing high speed (2x) recording of discs loaded in the 3-CD changer
- Optical digital/analog input and output with an additional input for microphone
- Sampling frequency converter capable of converting digital signals with sampling frequency of 32 kHz and 48 kHz to digital signals with a sampling frequency of 44.1 kHz for quality recording from a variety of sources
- No sampling frequency conversion of 44.1 kHz signals for optimal recording of CDs
- Mixing and recording of the 3-CD changer playback and either microphone input or an externally input source, or even the microphone input and the externally input source
- Many convenient recording options including: one-button CD and single track recording, Listening and Program Edit recording, manual recording, synchronized start recording, and mixed input recording
- CD playback pitch control that can adjust the speed of play up to 12% faster or slower than the normal speed to alter the pitch for singing along to or other customized uses
- Timer playback and timer recording that can be set for one-time or everyday operation
- OPC (Optimize Power Calibration), strength adjustment performed for best possible recording onto CD-R and CD-RW media

Types of Discs Compatible with the Unit

The following disc formats can be used in the CDR for recording.

In addition to the marks shown above, the phrases shown below or their equivalent should also be present somewhere on the packaging or accompanying documentation:

FOR CONSUMER
FOR CONSUMER USE
FOR MUSIC USE ONLY

Discs that cannot be used for recording are as follows:

- **Discs bearing marks other than those shown above**
- **Discs intended for professional use and/or marked "FOR PROFESSIONAL USE ONLY"**
- **Discs intended for recording computer data**

In addition to the two disc formats shown above, the following disc format can also be played in either the 3CD changer or CDR.

Notes

- Although the CDR can play all 3 types of discs at any time, the 3-CD changer can only play CD-R and CD-RW after they have been finalized. For more information on finalization of CD-R and CD-RW, see page 29.
- The unit can playback audio recorded in CD-G, CD-EXTRA and CD-Text discs.
- If a CD-R or CD-RW has been recorded using a personal computer, playback is only possible if the disc is recorded in the CD Audio format.

Connections

Do not turn on the power until all the connections have been completed.

Analog Connections

Use the accessory pin cables to connect this unit's LINE connectors with the TAPE/CDR connectors on the receiver, etc.

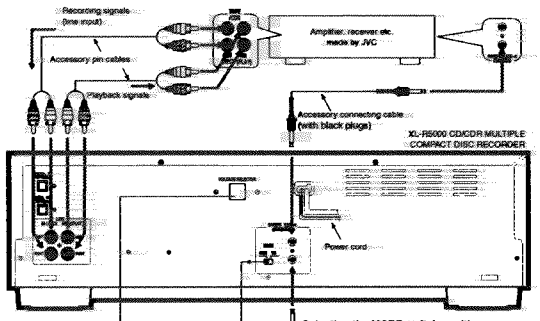

Selecting the MODE switch position

- When connected with CDR input/output terminals of the amplifier or receiver:

- When connected with TAPE input/output terminals of the amplifier or receiver:

- For further details on the COMPU LINK function, see page 37.

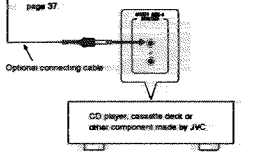

Note

- Before selecting the COMPU LINK-4 mode (CDR or TD), disconnect the power cord from the power outlet to turn off the power. The function will not be set if it is selected while the power is on.
  Alternatively, when the COMPU LINK-4 mode (CDR or TD) is selected while the power is on, disconnect the power cord and then re-connect it.
- Misconnections can be avoided by using the white plugs on the accessory pin cables for the LEFT channel and the red plugs for the RIGHT channel.
- Insert the plugs all the way in. Incomplete connections may cause noise.

Digital Connections

Before proceeding, check whether the optical digital cable can be connected.

- Connect a receiver or amplifier with digital audio capability to the DIGITAL OPTICAL connectors on this unit.
- Our connecting cable is used to transmit the stereo signals (L/R) as a digital signal.
- If analog audio connections are also being made, try to use the digital connectors on the receiver or amplifier that are labeled the same way as the analog connectors.
- Before purchasing an optical digital cable (optional), make sure that the cable in question can be connected to the amplifier, etc.
- Do not bend the optical digital cable at a sharp angle.
- When the power is turned on, the inside of the connector lights up red. This light is for sending the digital signals. Although this light will not harm your eyes, keep the protective cap in place if the connector is not going to be used.

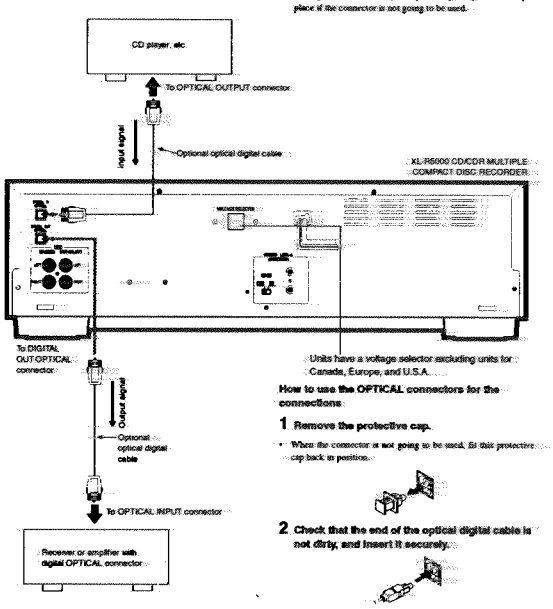

How to use the OPTICAL connectors for the connections

1 Remove the protective cap.

- When the connector is not going to be used, fit this protective cap back in position.

2 Check that the end of the optical digital cable is not dirty, and insert it securely.

Names of the Parts

Main Unit

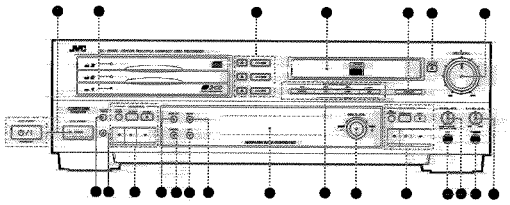

❶ POWER button and STANDBY lamp (for Canada and U.S.A.)
⏻/I button and STANDBY lamp (for other countries)
Press to turn the power on or to put in standby. When the unit is in standby, the STANDBY lamp is lit. (See page 10.)

❷ CD trays 1, 2, and 3 (numbered from bottom to top)
Load CDs on these trays for 3-CD changer playback. (See page 11.)

❸ Disc tray selector buttons (with current selection lamp) and ⏏ (eject) buttons
Press to select one of the CDs loaded in the 3-CD changer. The lamp on the button lights to indicate the currently selected tray. Use the ⏏ (eject) buttons to open and close the corresponding disc trays. (See page 11.)

❹ CDR disc tray
Load a recordable CD-R or CD-RW in this tray for recording. CD playback is also available using this tray.

❺ FINALIZE button
Press to finalize a CD-R or CD-RW disc when recording on the disc has been completed. (See page 29.)

❻ EJECT ⏏
Press to open and close the CDR disc tray.

❼ REC LEVEL control and lamp
Use to adjust the level of the source signal being recorded. (See page 18 and 25.)

❽ PHONES LEVEL control
Use to adjust the level of the volume being output to connected headphones (not supplied).

❾ PHONES connector
Use to connect headphones (not supplied) to this unit.

❿ MIX BALANCE control and lamp
Use to control the mixing levels of two independent sources being recorded. The lamp is lit during mixed recording. (See page 26.)

⓫ MIC connector
Use to connect a microphone (not supplied) to this unit. (See page 18.)

⓬ CDR CONTROL operation buttons

REC MUTING:	Press to record silence during a recording. (See page 19.)
SYNCHRO:	Press to select synchronized start recording. (See page 25.)
REC ●:	Press to put this unit in record pause mode for manual recording. (See page 18 and 26.)
■ (stop):	Press to stop recording or play of the CDR. (See page 12 and 19.)
❚❚ (pause):	Press to pause play and recording. (See page 12.)
► (play):	Press to start play or recording (in record pause mode) of the CDR. (See page 12 and 19.)

⓭ MULTI JOG dial
Depending on the mode, use to skip forward or backward through tracks on a CD, change the clock settings, or select setting options. (See pages 14, 16, 23, and 33.)

⓮ REC SOURCE SELECTOR buttons
Use to select the type of source to be recorded. (See pages 18 and 26.)

⓯ Display window
Displays the operation modes and other system information. (See page 7.)

⓰ MENU button
Press to enter a menu option.

⓱ SET button
Press to enter a selection.

⓲ CANCEL button
Press to cancel an operation.

⓳ DISPLAY button
Press repeatedly to change the type of information that appears in the display window information display.

⓴ CD CONTROL operation buttons

PLAY MODE:	Press repeatedly to select one of the play modes for the 3-CD changer. (See page 13 and 16.)
CD EDIT:	Press to select either the Listening Edit or Program Edit recording modes. (See page 21 and 22.)
CD REC:	Press to perform synchronized recording of the currently selected CD in the 3-CD changer. (See page 20 and 21.)
■ (stop):	Press to stop play of the selected disc in the 3-CD changer. (See page 11.)
❚❚ (pause):	Press to pause play of the selected disc in the 3-CD changer. (See page 11.)
► (play):	Press to start play of the selected disc in the 3-CD changer. (See page 11.)

㉑ Remote control sensor
Receives commands from the remote control.

㉒ CLOCK/TIMER button
Use to set the time. (See page 33.)

Display Window

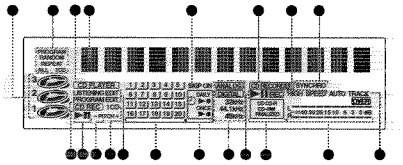

❶ CD numbers and play status displays
Indicate whether discs are loaded in any of the 3-CD changer disc trays, which disc is currently selected, and the operation status of the current disc. (See page 12.)

❷ PLAY MODE indicators
Light according to which play mode has been selected. (See page 14 to 16.)

❸ CD PLAYER indicator
Lights when the 3-CD changer is selected for play.

❹ Information display
Displays track, time, and operation information.

❺ SKIP ON indicator
Lights when the currently selected disc contains SKIP TRACK markers.

❻ CD RECORDER indicator
Lights when the CDR has been selected for play or recording.

❼ HIGH SPEED indicator
Lights when the high speed (2x) dubbing function is being performed. (See page 23.)

❽ Synchronized recording indicators
Light to indicate synchronized recording is on. (See page 20.)

❾ AUTO TRACK indicator
Lights when automatic track marking has been turned on. (See page 18.)

❿ Level meter
Indicates the level of the right and left channels during playback and recording operations. When the input signal exceeds 0 dB, the OVER indicator lights. (See page 18.)

⓫ Disc format indicators
Light to indicate the type of disc that is loaded in the CDR.

⓬ CDR deck operation indicators
Light to indicate the operation mode of the CDR.

⓭ Recording type indicators and sampling frequency indicators
Light to indicate whether the recording is analog or digital. During digital recording, the appropriate frequency indicator lights to indicate the sampling frequency of the source being recorded. (See page 18.)

⓮ Timer operation indicators
Indicate that a Timer Play or Timer Recording function has been set, and whether it is set for everyday or one-time operation. (See pages 33.)

⓯ Music calendar
Indicates the number of tracks on the currently selected CD or CDR, and the track on the disc that is being played or recorded.

⓰ EDIT recording indicators
Indicates whether the Listening Edit or Program Edit functions are being performed. (See pages 21 and 22.)

⓱ 1CD indicator
Lights during synchronized recording. (See page 20.)

⓲ PITCH (+/–) indicators
Indicate that the pitch of CD play has been adjusted in one direction or the other. (See page 15.)

⓳ 3-CD changer operation indicators
Light to indicate the operation mode of the 3-CD changer.

⓴ CD REC indicator
Indicates the CD(s) loaded in the 3-CD changer is being recorded by the CDR.

Using the Remote Control

Remote Control

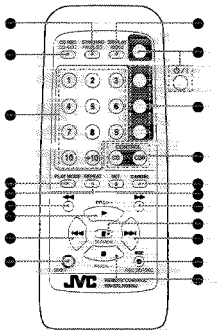

When performing the procedures in this manual, the buttons on the remote control have the same function as the corresponding buttons on the main unit.

SYNCHRO/FINALIZE button
Press to select synchronized start recording. (See page 25.)
When SHIFT is pressed down, press to start finalization of a CD-R or CD-RW. (See page 29.)

CD REC/CD EDIT button
Press to start the CD REC function. (See pages 21.)
When SHIFT is pressed down, press repeatedly to select Listening Edit or Program Edit functions. (See pages 21 and 22.)

Number buttons
Press to select a track for playback. (See page 13.)

PLAY MODE button
Press repeatedly to select a play mode for the 3-CD changer. (See page 15.)

REPEAT button
Press repeatedly to select one of the repeat play modes. (See page 14.)

◀◀ (reverse) button
Press to perform fast reverse search of the currently selected CD. (See page 13.)

▶ (play)/PITCH + button
Press to play the currently selected CD. (See page 10 and 12.)
When SHIFT is pressed down, press to raise the pitch of CD playback. (See page 15.)

⏮ (skip reverse) button
Press to skip back to the beginning of previous tracks. (See page 14.)

SHIFT button
Press down in conjunction with other buttons on the remote control to make use of their secondary functions.

DISPLAY/MENU button
Press repeatedly to change the type of information that appears in the display window information display.
When SHIFT is pressed down, press to enter a menu option.

POWER (for Canada and U.S.A.)/ ⏻/I (for other countries) button
Press to turn the power of this unit on or to put in standby. (See page 10.)

CD1, CD2, and CD3 disc selection buttons
Use to select one of the discs loaded in the 3-CD changer. (See page 10,12, and 13.)

CD and CDR deck selection buttons
Press to change the function of this unit to the 3-CD changer or CDR. (See page 12.)

CANCEL button
Press to cancel an operation.

SET button
Press to enter a selection.

▶▶ (forward) button
Press to perform fast forward search of the currently selected CD. (See page 13.)

⏸ (pause)/ PITCH 0 button
Press to pause playback of the currently selected disc. (See page 12.)
When SHIFT is pressed down, press to restore the pitch level of CD playback. (See page 15.)

⏭ (skip forward) button
Press to skip forward to other tracks on the disc. (See page 14.)

REC ●/REC MUTING button
Press to put this unit in the record pause mode. (See page 18 and 26.)
When SHIFT is pressed down, press to record silence during a recording. (See page 19.)

■ (stop)/PITCH - button
Press to stop playback of the currently selected disc. (See page 12.)
When SHIFT is pressed down, press to lower the pitch level of CD playback. (See page 15.)

Inserting the batteries

1 Press down on the point shown by the arrow at the top of the compartment cover, and pull up the cover to open the compartment.

2 Place the two accessory AA (15F), R6, SUM-3 batteries in the remote control making sure to align the polarity markings ("+" and "−") inside the compartment and on the batteries.

3 Place the cover over the compartment, and press down lightly.

How to use the remote control correctly

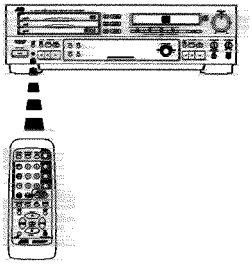

- Point the remote control correctly at the remote control sensor on the main unit when pressing the buttons.
- The remote control can be operated at a distance of up to 7 meters or so from the remote control sensor. This distance will be less if the remote control is operated from a position which is not directly in front or on the same level as the main unit.
- When the distance over which the remote control can be operated starts to drop, it means that the batteries are nearing the end of their service life.
- Replace both batteries (AA (15F), R6, SUM-3) with fresh units.
- The dry batteries provided with the unit are for operational check purposes. Replace them with fresh units at the earliest opportunity.
- Do not drop the remote control or subject it to strong impact.
- In order to ensure that the remote control does not fail to operate, avoid operation under the following conditions:
  - When the remote control sensor is exposed to direct sunlight or other intense sources of light.
  - When objects in front of the remote control sensor block the transmission of signals from the remote control.

Power ON/STANDBY Operations

Turning the power on and putting in standby

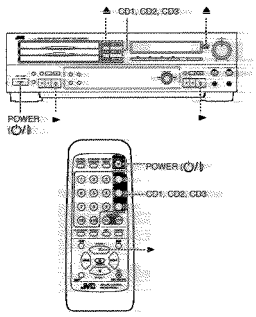

To turn on the power

Press the POWER (for Canada and U.S.A.)/⏻/I (for other countries) button on the front panel or remote control.

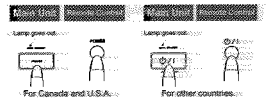

- The currently selected function appears in the display window.

To put the power to standby

Press the POWER (for Canada and U.S.A.)/⏻/I (for other countries) button on the front panel or remote control.

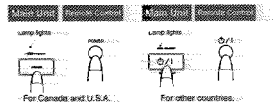

- The clock display appears in the display window. It flashes if the clock has not been set.
- The power can only be put to standby by pressing the POWER (for Canada and U.S.A.)/⏻/I (for other countries) button pressing.

If the POWER (for Canada and U.S.A.)/⏻/I (for other countries) button is pressed during recording, the standby lamp flashes while the unit brings the operation to a stop. Once the unit has been put in the stop mode, the unit is put in standby and the standby lamp lights steady. During this time, there is no effect if any of the buttons on the front panel or remote control (including POWER (for Canada and U.S.A.)/⏻/I (for other countries)) are pressed.

To turn on the power by pressing a function button

When the power is switched to STANDBY, it can be turned on and a function selected simply by pressing one of the buttons shown in the figure below.

	Function	Operation
Main unit CD1 CD2 CD3 Remote control CD1 CD2 CD3	CD	The function is set to CD. The CD PLAYER indicator lights. If one of these buttons is pressed when a CD is on the corresponding CD tray, continuous play starts from the CD tray which corresponds to the button pressed. These buttons do not function during program and random play modes.
Main unit (CD control) ▶	CD	The function is set to CD. The CD PLAYER indicator lights.
Main unit (CDR control) ●	CDR	The function is set to CDR. The CD RECORDER indicator lights.

- When the ▶ button for either the 3-CD changer or CDR is pressed, the power is turned on and the corresponding tray is selected. If a disc is loaded in the selected tray, playback begins. If the power has been turned on, pressing ▶ on the remote control selects the last selected function (3-CD changer or CDR) and starts playback of the disc loaded in the selected tray.
- When one of the 3-CD changer ⏏ (open) buttons or the CDR EJECT ⏏ button is pressed, the power is turned on and the tray opens, but the currently selected function (3-CD changer or CDR) does not change.
- If the main power is turned off or if the AC power cord is unplugged from the wall outlet for longer than an hour, the internal clock, program etc. of this unit may be reset. When this occurs, please set the clock (and timer functions) again.

Listening to CDs

Continuous Playback of the 3-CD Changer (playing the loaded discs through once each)

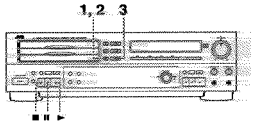

Example: When starting playback at CD1.

1 Press the CD1 ⏏ button to open the CD tray.

- The power comes on, and the CD1 tray opens.

2 Load a CD in position and close the tray.

Place the CD with its label side facing up.

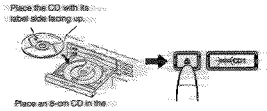

Place an 8-cm CD in the center cutout.

- While referring to steps 1 and 2, press the CD2 ⏏ button and CD3 ⏏ button, and load CDs in positions on the CD2 and CD3 trays.
- While the tray concerned is being opened or closed or while the CD selection is being changed internally, no operation will result even if the ⏏ button is pressed.
- Disc trays cannot be opened if recording is being performed by the CDR.

3 Press the CD1 button.

- The function is set to CD, and CD1 playback starts from track 1.

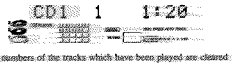

- The numbers of the tracks which have been played are cleared from the music calendar.
- In this example, playback proceeds through all the tracks on CD1, CD2, and CD3, and stops automatically after the last track on CD3. This pattern changes depending on the first disc selected as described in the following section.

When one or more CDs are already on the trays.

- Press the CD1, CD2 or CD3 button corresponding to the CD concerned directly. Continuous play starts with the CD corresponding to the number of the button pressed. If the button is pressed when the power is in standby, continuous play starts when the power is next turned on.
- **When play starts from CD2**
  The CDs are played in the sequence of CD2 → CD3 → CD1, after which play is automatically stopped.
- **When play starts from CD3**
  The CDs are played in the sequence of CD3 → CD1 → CD2, after which play is automatically stopped.
  If one of the trays does not contain a CD, play skips to the CD in the next tray in the sequence.

Playing CDs using the ▶ button

Press the CD CONTROL ▶ (play) button to select the 3-CD changer function. This automatically starts playback of the disc in the selected tray.

- The selected disc tray is indicated by the red "▲" appearing to the immediate right of the CD number displays.

Stopping CD playback

To stop playback at any time

- When the CD CONTROL ■ (STOP) button is pressed, playback stops and the total track number and play time appear in the display.

- When all the tracks on a CD have been played through, playback will stop automatically.

To stop playback temporarily

- If the ⏸ (pause) button is pressed, playback is paused. When the ▶ button is pressed, playback is resumed from the place where it was stopped.

- Pressing the ⏸ (pause) button during synchronized recording has no effect.
- During mixed recording, recording continues even if the CD CONTROL ⏸ (pause) button is pressed.

Concerning the CD numbers and play status display

The display shows for each CD tray whether or not a CD has been inserted as well as the play status of the CD.

CDR Playback Operations

The CDR section can be used to play back CDs, CD-R, and CD-RW.

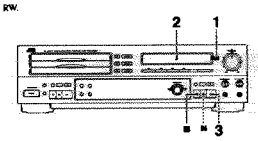

1 Press the EJECT ≜ button to open the CDR disc tray.

2 Load a disc in position and close the tray.

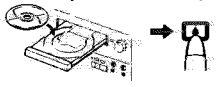

- When a CD-R or CD-RW is loaded in the CDR for the first time, OPC (Optimize Power Calibration) is performed. This procedure requires anywhere from 10 seconds up to a minute to perform. Once OPC has been performed, the unit stores the information for that disc in memory (occasionally some older data will be erased and OPC may need to be performed again in these cases).
- When a CD-R or CD-RW is loaded in the CDR, the unit determines the format of the disc, whether it is finalized or not, and then determines whether OPC (Optimize Power Calibration) has been performed for the disc or not. At that time, OPC is also performed if necessary. The length of time required for this unit to perform the necessary operations depends on the type and status of the disc.
- When "UPDATE OPC" is displayed, the [redacted] indicator lights and the ▶ and disc format indicator flashes.

3 Press the CDR CONTROL ▶ button to select the CDR function and start playback at track 1.

- Playback is automatically stopped at the end of the last track on the disc.
- Unfinalized CD-R and CD-RW may be played back using the CDR. Unfinalized discs cannot be played back using the 3-CD changer.

To stop CDR playback

- Pressing the CDR CONTROL ■ (stop) button at any point during playback stops the playback and the total track number and play time appear in the display.

- When an unfinalized CD-R or CD-RW is loaded in the CDR and the EJECT ≜ button is pressed to open the CDR disc tray, "FINALIZE?" appears in the display window. If you do not wish to finalize the disc at this time, press the EJECT ≜ button again. For more information on finalization, see page 29.

To stop CDR playback temporarily

- Pressing the CDR CONTROL II (pause) button at any time during playback pauses the playback. Press the ▶ button to resume playback.

- When playback is paused, the II indicator lights in the display.

Using the Remote Control to Control Playback

The buttons on the remote control can be used to control playback of both the 3-CD changer and CDR. When using the remote control, be sure to point the remote control correctly at the remote control sensor on the main unit when pressing the buttons.

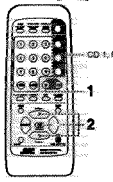

1 Press the CD or CDR button to select the function.

CD button: To control discs in the 3-CD changer.
CDR button: To control the disc in the CDR.

- Pressing the CD 1, CD 2, or CD 3 buttons automatically sets the main unit to the CD function and starts playback of the disc in the selected tray.

- When the CD function is selected, the CD PLAYER indicator lights in the display. When the CDR function is selected, the CD RECORDER indicator lights.

2 Press the command button of the operation you want to perform.

- The buttons on the remote control perform the same operation as those on the main unit.
- The function is applied to the 3-CD changer or CDR function depending on which function is currently selected.

Direct Playback from a Specific Track

CD playback can be started from a specific track by pressing the corresponding number button(s) on the remote control.

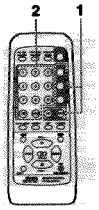

1 Press the function button corresponding to the CD whose track is to be heard.

For a CD in the 3-CD changer: For a CD in the CDR

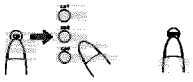

2 Press the number button(s) of the track you want to hear.

The track number corresponding to the buttons pressed appears in the display window, and direct play starts.

To select tracks 1 through 10
Press the number button 1 to 10 corresponding to the track.

To select tracks 11 or above
First press the +10 button, and then press one of the number buttons 1 to 10.

Example: Track 15
: Press +10 followed by 5.
Example: Track 20
: Press +10 followed by 10.
Example: Track 25
: Press +10 twice followed by 5.

Another track can be selected even during play.
Press the number button(s) corresponding to the track which is to be heard. The display now changes to indicate the corresponding track number, and play starts from the beginning of the track concerned.
To select a track of a CD on another tray, repeat the above procedure.

- Direct play cannot be initiated by pressing the +10 button alone: this button must be used with one of the number buttons 1 to 10. Neither can direct play be initiated when "RANDOM" appears on the display.

Forward and Reverse Search

The ◀◀ (reverse) and ▶▶ (forward) buttons on the remote control can be used to find a particular location on a CD. Press down the button corresponding to the direction you want during CD playback. Release the button when the location you want to hear is reached.

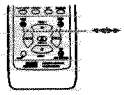

- During forward or reverse search, the playback will sound garbled. However, normal playback will resume when the search button is released.

Skipping Tracks

To skip forward or backward to different tracks on the currently selected CD, use the MULTI JOG dial on the unit or the ▶▶I or I◀◀ buttons on the remote control.

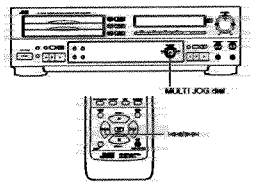

- When the last track on a CD loaded in the 3-CD changer is advanced to the next track, playback moves to the first track on the next CD. There is no effect when the last track on the CD loaded in the CDR is advanced.

Main Unit

- Turn counterclockwise one notch to return to the beginning of the current track, or keep turning until the track number you want appears in the display.
- Turn clockwise one notch to move to the beginning of the next track, or keep turning until the track you want appears in the display.

Remote Control

- Press the I◀◀ button once to return to the beginning of the current track and press repeatedly until the track you want appears in the display.
- Press the ▶▶I button once to move to the beginning of the next track, and press repeatedly until the track you want appears in the display.

Repeat Playback

The repeat play mode can be selected by pressing the REPEAT button on the remote control when the function is set to CD. Each time the REPEAT button is pressed, a different display appears in the display window.

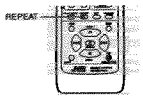

During normal play mode

REPEAT ALL : Repeat playback of all of the CDs loaded in the 3-CD changer.
⬇
REPEAT 1CD : Repeat playback of the CD currently playing.
⬇
REPEAT 1 : Repeat playback of the track currently playing.
⬇
Repeat off (normal display appears)

During program and random play modes

REPEAT ALL : Repeat random playback of all of the CDs loaded in the 3-CD changer or repeat playback of the entire program.
⬇
REPEAT 1 : Repeat playback of the track currently playing.
⬇
Repeat off (normal display appears)

- Repeat playback operations cannot be performed during CD REC and CD EDIT recording operations.
- Play is repeated in the selected mode when the CD1, CD2 or CD3 button or ▶ button (or the ▶ button on the main unit) is pressed.
- Repeat playback operations are not possible for the disc loaded in the CDR.

Random Playback

The random play mode can be selected by pressing the PLAY MODE button repeatedly on the main unit or remote control when the function is in the CD stop mode.

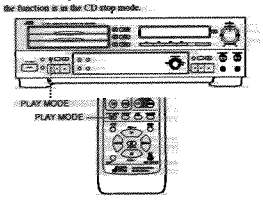

- Random playback of tracks on the disc loaded in the CDR cannot be performed.
- Random play is started by pressing the ▶ button.

To release the random play mode

Press the PLAY MODE button in the stop mode repeatedly until the RANDOM indicator is cleared from the display.

CD Playback Pitch Control

There are three CD pitch control buttons on the remote control that can be used to vary the speed of CD playback up to 12% faster or slower than the standard playback speed. This function can be useful in changing the pitch when adding vocals to a recording using the microphone input or when matching the playback speed of the CD with another source.

To adjust the pitch of the source CD during playback

While pressing down the SHIFT button, press PITCH+ to raise the pitch or PITCH− to lower the pitch of CD playback. Each press of the button raises or lowers the playback speed in 1% steps.

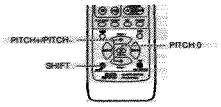

- To restore the playback speed to normal, press PITCH 0 while pressing down the SHIFT button.
- The adjusted playback speed can only be recorded using analog recording functions such as mixed recording.
- Even if the pitch has been adjusted, when digital synchronized recording is performed, the pitch is automatically restored to 0 before recording begins.

- When the speed of CD playback is changed using the pitch control buttons, there is no output from the DIGITAL OUT OPTICAL connector.

Disc Lock Function

The Disc Lock function can be used to make it impossible for children or anyone else to take CDs out or load new ones for both 3 CD changer and CDR.
This function is suitable for ensuring that timer play or timer recording functions can be performed correctly.

- When the power is in standby, press the ≜ button of CD1 while holding down the ■ button on the front panel. "TRAY LOCKED" appears for 3 seconds, and it is no longer possible to take out or load CDs.

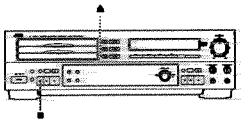

To cancel the Disc Lock function.
Repeat the same step. "TRAY UNLOCKED" appears for 3 seconds, and the Disc Lock function is canceled.
Please note that the disc lock function is canceled if the main power is turned off or if the AC power cord is unplugged from the wall outlet.

Program Playback

Up to 32 tracks can be programmed. Any tracks on CD1, CD2 and CD3 can be selected.

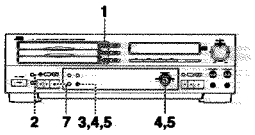

1 Insert CDs that contain tracks to be programmed.

- Tracks on a CD which has not been inserted cannot be played even when they have been programmed. Operation will simply move on to the next step in the program.

2 Press the PLAY MODE button while the unit is in the CD stop mode to select PROGRAM.

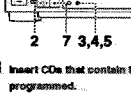

- "PG NO PROGRAM" appears in the display when no program has been made.

3 Press the SET button.

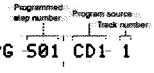

4 Select and enter the program source.

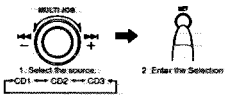

- The source can be selected in the reverse direction by turning the MULTI JOG dial counterclockwise.
- When the SET button is pressed, the programming step and track number flash.
- A disc loaded in the CDR cannot be selected.

5 Select and enter one of the tracks.

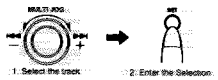

- When track 2 on the CD1 is selected for program 1:

PG S01 CD1 2

- When the selection is entered:

PG S02 CD1 2

6 Repeat steps 4 and 5 to program up to 32 tracks (when you try to program more than 32 tracks, "MEMORY FULL" is displayed).

7 Press the ► button to start program play.

- The numbers of the tracks which have been played are cleared from the music calendar, and they are displayed when program play is completed.
- Operation stops automatically when all the programmed tracks have been played.

To clear a track from the program

To delete a programmed track, turn the MULTI JOG dial (or press the ⏮/⏭ buttons on the remote) in the stop mode until the desired track is displayed in the screen. Press the CANCEL button to delete the track from the program. All the tracks following the erased one will automatically decrease by one and will be renumbered. To clear the entire program, press cancel until "PG NO PROGRAM" is displayed in the screen.

To change contents of the program

In the stop mode, press the SET button followed by the CANCEL button. Programmed tracks will be erased in reverse order each time the CANCEL button is pressed. Continue erasing in this manner until the desired track is reached. Follow programming steps to reprogram tracks after the desired step.

To check the contents of the program

To check what has been programmed while the tracks are being programmed, press the ■ (stop) button, and use the MULTI JOG dial (or press the ⏮/⏭ buttons on the remote) to check.

Program playback using the remote control

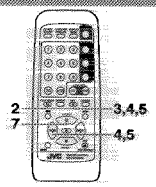

1 Load the CDs whose tracks are to be programmed into the 3-CD changer.

2 Press the PLAY MODE button while the unit is in the CD stop mode to select PROGRAM.

- "PG NO PROGRAM" appears in the display when no program has been made.

3 Press the SET button.

- "PG S01 CD1 1" is displayed. For details on the meaning of this display, see step 3 on the previous page.

4 Select and enter the program source.

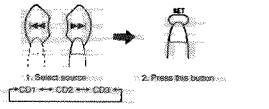

- When the SET button is pressed, the programming step and track number flash.

5 Select and enter the track.

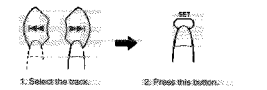

6 Repeat steps 4 and 5 (this procedure can be repeated for up to 32 tracks).

7 Press the ► button to start program play.

- Operation stops automatically when all the programmed tracks have been played.

To return the program mode to the normal status in the stop mode

Repeatedly press PLAY MODE on the main unit or remote control until the play time appears in the display window.

Recording onto CD-R and CD-RW

Notes on Recording

- Do not use CD-R or CD-RW with dust and/or small scratches on the surface as this may cause the recorded sound to jump and may even cause this unit to malfunction.
- While making a recording or when the "REC" indicator lights in the display, do not subject this unit to any shock or vibration.
- Before recording on a CD-R, it is recommended to make a sample recording on a CD-RW.

Read through this section before recording.

Types of recording

The following types of recording are possible with this unit.

Manual recording (page 18)

Manually control the type of recording source and exactly what is to be recorded.

- DIGITAL (digital recording of an external source connected to this unit's OPTICAL input connector)
- CD (digital/analog recording of CDs loaded in the 3-CD changer)
- LINE (analog recording of an external source connected to this unit's LINE input connectors)
- MIC (analog recording of input from a connected microphone)

Synchronized one-button full CD recording (page 20)

Press the CD REC button while the unit is in the stop mode to instantly dub the entire selected CD in the 3-CD changer to a CD-R or CD-RW.

Synchronized one-button single track recording (page 20)

Press the CD REC button while the unit is playing or paused to instantly dub the current track on a CD in the 3-CD changer to a CD-R or CD-RW.

Listening Edit recording (page 21)

Select tracks to be recorded while listening to a CD in the 3-CD changer.

Program Edit recording (page 22)

Program tracks to be recorded from one or all of the CDs loaded in the 3-CD changer.

Synchronized start recording (page 23)

Start recording a source as soon as the CDR detects an input signal from that source.

Mixed input recording (page 24)

Combine and mix the volumes of two selected analog inputs for recording.

Automatic and manual track marking (page 19)

- **When automatic track marking is turned on**

Tracks are automatically set in the recording. For digital sources, the track information recorded in the digital source signal is used. For analog recording, spaces of silence are interpreted as track separations.

- **Adding track marks manually**

Manual track marking offers the flexibility to place track marks anywhere in your recording. However, when automatic track marking is turned on, manual track marking cannot be operated.

Sampling rate converter

The unit incorporates a sampling rate converter to ensure that the original digital signals will be recorded regardless of the sampling frequency (32 kHz, 44.1 kHz or 48 kHz) of the source being recorded.

Microphone connections

Use a microphone equipped with a standard plug to connect to MIC connector on this unit.

Manual Recording

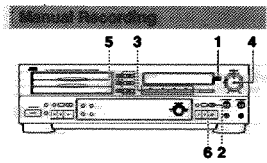

1 Insert a recordable CD-R or CD-RW.

2 Press REC ● to put the CDR in record pause mode.

- The remaining recording time on the CD-R or CD-RW appear in the display window.

3 Select (one of) the recording sources.

- DIGITAL: For recording the sound of a unit which has been connected to the OPTICAL IN connector (digital input)
  When you switch from DIGITAL source recording to another source, press the DIGITAL button once to turn off the indicator, and then select the other source.
- CD: For recording the CDs loaded in into CD1, CD2 and/or CD3
  Press CD repeatedly to select either DIGITAL or ANALOG recording.

  Note: Analog recording is performed for CD+LINE or CD+MIC mixing even when the CD pitch control has been set to OFF.
- LINE: For recording the sound of a unit which has been connected to the LINE IN connectors (analog input)
- MIC: For recording the sound from a microphone which has been connected to the MIC connector (analog input)

Note

- If a source has already been selected, its corresponding lamp will light.

4 When analog signals are to be recorded, adjust the recording level.

- Adjust the volume in such a way that the 0 dB display is not exceeded when the loudest sound is supplied.

The OVER indicator should not be made to light as this may cause distortion in the recording.

5 Play the sound of the source to be recorded.

- If the CD1 button is pressed when CD serves as the source, the tracks are recorded in the following sequence:
  CD1 → CD2 → CD3

6 Press the ► (play) button to start recording.

When recording is complete

The ► indicator flashes and operation stops automatically.
Press the ■ (STOP) button to stop the recording at any time.

Note

- When DIGITAL IN UNLOCK appears in the display, the OPTICAL IN connector is not connected to the source unit.
- Upon completion of recording, the ► indicator flashes. Operating any button while this indicator flashes may render the disc unusable. Always wait until the ► indicator stops flashing before proceeding with the next operation.
- When digital input signals are supplied, they will be recorded at their original digital form. There is no need to adjust their recording level.

To record silence in the recording

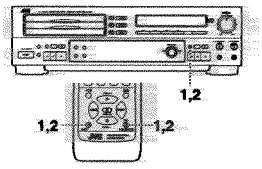

1. While the CDR is recording, press the REC MUTING button on the main unit (or press REC ●/REC MUTING while the SHIFT button is pressed down on the remote control) to start recording silence.
2. Release the REC MUTING button. After four seconds of silence has been recorded, the unit is put in the record pause mode.

Notes

- Four seconds of silence is recorded even if the button is held down for less than four seconds. Even if the button is held down for longer than four seconds, the unit is put in the record pause mode after the button is released.
- REC MUTING cannot be used at the beginning of a recording from the record pause mode.

Setting automatic or manual track marking

When automatic track marking is turned on, tracks are automatically set in the recording. For digital sources, the track information recorded in the digital source signal is used. For analog recording, spaces of silence are interpreted as track separations. For analog recording, automatic track marking is performed when the unit detects 4 seconds of silence in the recording.
Manual track marking offers the flexibility to place track marks anywhere in your recording.

To turn on automatic track marking

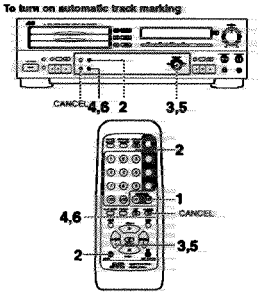

1. Press CD-R on the remote control while pointing at the unit to select the CDR function.
2. When the unit is in the stop mode, press the MENU button on the main unit (or the DISPLAY/MENU button on the remote control while holding down the SHIFT button).
3. Turn the MULTI JOG dial or press the ⏮/⏭ button on the remote control until "AUTO TRACK" appears in the display.
4. Press the SET button.
   - The current setting is displayed on the screen. (The setting is on by default.)
5. Turn the MULTI JOG dial or press the ⏮/⏭ button on the remote control to select "AUTO TR ON".
6. Press the SET button.
   - If "AUTO TR ON" is selected, the AUTO TRACK indicator lights in the display.
   - Press the CANCEL button to cancel the procedure and return to the normal display.

To add track marks manually

1 In the procedure above, set the automatic track setting to "AUTO TR OFF".

2 During recording, press the SET button to apply a track mark.

Notes

- Even if automatic track marking is turned off, automatic track marking will be performed during synchronized one-button recording. When this occurs, manual track marking is temporarily disabled.
- Tracks must be at least four seconds in length. Pressing the SET button less than four seconds after the previous track mark was made has no effect.

Synchronized Recording of a 3-CD Changer Playback

Performing synchronized one-button recording of a full CD

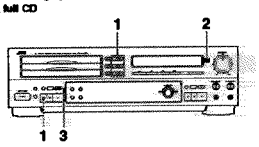

One button synchronized recording of CDs loaded in the 3-CD changer.

1 **Select and stop the CD to be recorded.**

Example: When recording CD1

- Only the selected CD is recorded.

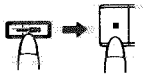

2 **Load a recordable CD-R or CD-RW and close the tray.**

3 **Press the CD REC button to start recording.**

- After "DISC DUBBING" is displayed, CD play and CDR recording start simultaneously. This is called synchro recording. Recording starts from the first track of the CD.

Remaining play time of track being recorded / Remaining recording time on CD-R or CD-RW

3:05 ▶ 73:21

- When a CD is recorded, its digital signals are recorded in their original form. A track mark is automatically placed where one track changes to the next, and the track number also changes.

When recording is complete

After "STOP DUBBING" is displayed, operation stops automatically. It also stops automatically when CD play finishes.

To check a track number during recording

Press DISPLAY button on the main unit (or DISPLAY/MENU on the remote control).

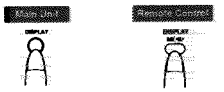

CD number / CD track number / CD-R or CD-RW track number

CD1 1▶CDR 1

To stop the recording at any time

Press the ■ (stop) button flashes and "STOP DUBBING".

Notes

- There is no need to adjust the recording level (for a digital recording).
- If the source CD being recorded from the 3-CD changer is itself a digital copy, digital recording cannot be performed (see page 36 for more details.). When this occurs, the recording type will switch automatically from digital to analog.
- This type of recording is not possible while a CD is playing.
- When the CD REC button is pressed, the function is automatically switched to CD. This means that when the CD to be recorded has been selected, recording can proceed straightaway.
- Upon completion of recording, "STOP DUBBING" flashes. Always wait for "STOP DUBBING" to be cleared before proceeding with the next operation.

Performing synchronized one-button recording of a single track

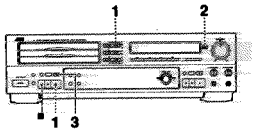

1 **Select a disc and start playback.**

Example: When planning to record a track on CD1

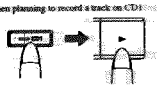

2 **Insert a recordable CD-R or CD-RW in the CDR disc tray.**

3 **While the disc is playing back the track you want to record or if that track is being paused, press CD REC on the main unit or CD REC/CD EDIT on the remote control.**

- The CD restarts playback from the beginning of the track and the CDR starts recording. Recording stops when the track is finished.
- When a CD is recorded, its digital signals are recorded in their original form. A new track mark is automatically placed at the beginning of the track being recorded.

When recording is complete

After "STOP DUBBING" is displayed, operation stops automatically.

To stop recording at any time

Press the ■ (stop) button.

The recording mode is released after "STOP DUBBING" is displayed.

Notes

- There is no need to adjust the recording level (for a digital recording).
- If the source CD being recorded from the 3-CD changer is itself a digital copy, digital recording cannot be performed. When this occurs, the recording type will switch automatically from digital to analog.
- Upon completion of recording, "STOP DUBBING" is displayed.
  Always wait for "STOP DUBBING" to be cleared before proceeding with the next operation.

Listening Edit Recording

Selected tracks can be programmed and recorded.

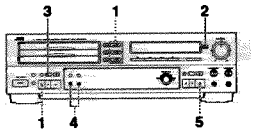

1 **Select and stop the CD to be recorded.**

2 **Load a recordable CD-R or CD-RW in the CDR tray.**

3 **Press the CD EDIT button on the main unit (or press the CD REC/CD EDIT button while holding down the SHIFT button on the remote control) to select the Listening Edit mode.**

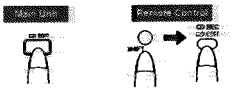

- The unit is put in the record pause mode, and the selected disc starts playback.
- Starts play from the first track. "LISTEN EDIT" appears in the display, and the play time of the first track and remaining recording time on the CD-R or CD-RW are displayed. CDR is set to the record pause mode.

4 **Program the tracks while the CD is playing by assigning a tag to each track on the disc.**

a. When the track now playing is to be recorded

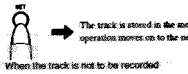

The track is stored in the memory, and operation moves on to the next track.

b. When the track is not to be recorded

The track is not stored in the memory, and operation moves on to the next track.

When the first track has been stored in memory

Remaining recording time on a CD-R or CD-RW (pre-calculated) / Play time of second track

5:18 ▶ 68:31

"1" is cleared from the music calendar.

Note

- When there is not much recording time left on the CD-R or CD-RW, tracks that are longer than the remaining time (pre-calculated) can be programmed but "NO REM" appears in the display.

When the last programmed selection is in the memory

Press the CD EDIT button to display "LAST L-PG OK?". If you want to record the programmed tracks in the memory, press the ▶/SET button. If you want to program a new selection of tracks, press the CANCEL button.

5 **Press the CDR CONTROL ▶ button to start recording.**

- If "SHORT REM OK?" appears in the display, it may not be possible to record the last programmed selection. During actual recording, this unit checks the actual remaining recording time before the beginning of the last programmed selection. If that selection cannot be recorded in its entirety, it will not be recorded. Press CDR CONTROL ▶ to start recording. Press "CANCEL" to restart the programming procedure.
- Only the tracks on the CD that were selected are recorded.

When recording is complete

After "STOP DUBBING" is displayed, operation stops automatically. It also stops automatically when play of the last CD finishes.

To stop the recording at any time

Press the ■ (stop) button. The recording mode is released after "STOP DUBBING" is displayed.

Notes

- There is no need to adjust the recording level (for a digital recording).
- Up to 32 tracks can be included in the programming. The same track cannot be programmed twice.
- Upon completion of recording, "STOP DUBBING" is displayed. Always wait for "STOP DUBBING" to be cleared before proceeding with the next operation.

Program Edit Recording

This type of recording allows you to make a program of your favorite tracks on any of the CDs loaded in the 3-CD changer in any order you like. Similar to program playback, you can even choose to use program playback information for this type of recording.

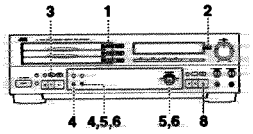

1 **Load CDs in the 3-CD changer.**

2 **Load a recordable CD-R or CD-RW in the CDR tray.**

3 **Press the CD EDIT button twice on the main unit (or press the CD REC/CD EDIT button while holding down the SHIFT button on the remote control) to select the Program Edit mode.**

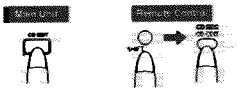

- The unit is put in the record pause mode and "PROGRAM EDIT" appears in the display.
- At this time, the unit is reading the track and time information (called the TOC, or Table of Contents) on each of the loaded discs.

4 **If you have already programmed the tracks on the discs using program Edit, "LAST P-PG OK?" appears in the display. Press the ▶/SET button to use the stored program information and proceed to step 5. To create a new program for recording, press the CANCEL button.**

- If you press the CANCEL button, the remaining time followed by the program step information appear in the display.

5 **Select and enter the program source.**

1. Select the source. 2. Enter the Selection

CD1 ⟷ CD2 ⟷ CD3

- The source can be selected in either direction using the MULTI JOG dial on the main unit or the ⏮⏭ and ▶▶I buttons on the remote control.
- When the SET button is pressed, the programming and track number flash.

6 **Select and enter one of the tracks.**

1. Select the track 2. Enter the Selection

- After the track is entered, the amount of time remaining on the CD-R or CD-RW appears in the display followed by the information for the next step in the program.

7 **Repeat steps 5 and 6 to continue programming tracks.**

- Up to 32 tracks can be programmed. The same track may be programmed more than once.
- The Program Edit mode is stopped if 32 steps have been programmed or if there is no more time remaining on the CD-R or CD-RW.

8 **Press the CDR CONTROL ▶ button to start recording the program.**

- Recording starts from the first step in the program, and stops when the last step is finished.
- The program information is maintained in memory until one of the disc trays (CD1, CD2, CD3) is opened.

When recording is complete

After "STOP DUBBING" is displayed, operation stops automatically. It also stops automatically after the last step in the program is finished.

To stop recording at any time

Press the ■ (stop) button.

The recording mode is released after "STOP DUBBING" is displayed.

Note

- If the source CD being recorded from the 3-CD changer is itself a digital copy, digital recording cannot be performed. When this occurs, the recording type will switch automatically from digital to analog.

3-CD Changer to CDR Recording Options

There are a number of advantages of having a 3-CD changer and CDR in the same unit, mainly that the unit has direct control over both components. Because of this, the following recording options are available: high-speed (2x) recording and track spacing.

Setting the unit to perform high-speed recording

High-speed (2x) recording is only possible for digital recording from the 3-CD changer to the CDR.

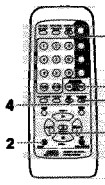

1 **Press the CD-R button on the remote control while pointing at the unit to select the CDR function.**

2 **When the unit is in the stop mode, press the MENU button on the main unit (or the DISPLAY/MENU button on the remote control while holding down the SHIFT button)**

3 **Turn the MULTI JOG dial or press the ⏮/⏭ button on the remote control until "DUB-SPEED" appears in the display.**

4 **Press the SET button.**

- The current setting is displayed on the screen. (The setting is 2X by default.)

5 **Turn the MULTI JOG dial or press the ⏮/⏭ button on the remote control to select "DUB-SPEED 2X" or "DUB-SPEED 1X".**

- If "DUB-SPEED 2X" is selected, the HIGH SPEED indicator lights in the display.
- Press the CANCEL button to cancel the procedure and return to the normal display.

Notes

- High-speed (2x) recording is not possible under the following conditions:
  - When analog recording is performed.
  - When pitch adjustments have been made to the playback CD.
  - When mixed input recording is being performed.
- When high-speed (2x) recording is performed, there is no audio output from any of the output connectors (LINE OUT, OPTICAL OUT, HEADPHONES), and therefore it is not possible to monitor the recording. However, the current recording level is displayed in the level meter.

Setting the auto track spacing function

When this function is turned on, the unit records 2 seconds of silence at the beginning of each track during any automatic recording from the 3-CD changer to the CDR.

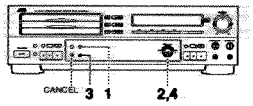

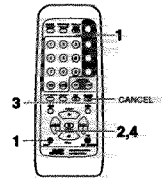

1 When the unit is in the stop mode, press the MENU button on the main unit (or the DISPLAY/MENU button on the remote control while holding down the SHIFT button).

2 Turn the MULTI JOG dial or press the ⏮/⏭ button on the remote control until "TRACK SPACE" appears in the display.

3 Press the SET button.

- The current setting is displayed on the screen. (The setting is on by default.)

4 Turn the MULTI JOG dial or press the ⏮/⏭ button on the remote control until "TR SPACE ON" or "TR SPACE OFF".

- There is no indicator to show that lights to the status of this function. During synchronized one-button recording, Listening Edit recording, and Program Edit recording modes, a 2 second silence will be recorded before every track.
- Press the CANCEL button to cancel the procedure and return to the normal display.

Synchronized Start Recording of External Components

Perform synchronized start recording of sources such as DAT and CD connected to either the DIGITAL IN OPTICAL connector or LINE IN (REC) connectors on this unit. Recording is automatically started when the unit detects audio signal input.

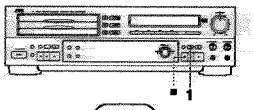

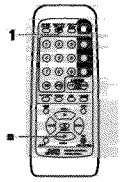

1 Press the SYNCHRO button (or the SYNCHRO/FINALIZE button on the remote control).

- The unit is put in the record pause mode, the SYNCHRO indicator lights in the display.
- For this procedure to work, playback of the source component should be stopped.

2 Start playing the source component.

When performing synchronized recording of a digital source

- Recording is started based on the digital signal.
- Track marking is based on track information recorded in the digital signal. Even if automatic track marking has been turned off, automatic track marking will be performed.

When performing synchronized recording of an analog source

- Recording is started when the unit detects an audio signal when a long period of silence is detected.
- Track marking is based on spaces of silence which the unit interprets to be track breaks. If automatic track marking has been turned off, manual track marking is necessary.

When recording is started, the "SYNCHRO" indicator disappears from the display.

To stop recording at any time

Press the ■ (stop) button.

When recording external sources

- Synchronized recording (other that synchronized start recording) cannot be used to record an external source (connected to DIGITAL IN OPTICAL or LINE IN (REC)). During synchronized recording, this unit is put in record pause after the end of each recorded track, and adjusts the gaps between tracks to be uniform. Because this unit is not capable of predicting or adjusting the gaps between the source tracks in the input signal, the gaps between tracks that are recorded will be identical to those of the source.
- Normally, manual recording is recommended for recording an external source (connected to DIGITAL IN OPTICAL or LINE IN (REC)). Even if synchronized start recording is used, recording will continue until there is no remaining time left on the CD being recorded*. For this reason, when recording an external source, be sure to press CDR CONTROL ■ to stop recording or CDR CONTROL ❚❚ to put this unit in record pause mode when the source you are recording is finished.
- When an MD player is connected to DIGITAL IN OPTICAL, this unit is put in record pause when MD playback is finished.

Notes

- Please note that if "AUTO TRACK" is set to "AUTO TR ON", track numbers are automatically assigned even with external sources.
- When the external source is a CD, MD or DAT player connected to the DIGITAL IN OPTICAL connector on this unit, this unit can automatically start and stop recording if a single track is recorded. For more information, see "Setting Up Synchronized Recording for External Digital Sources" on page 31.

Mixed Input Recording

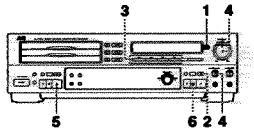

1 Load a recordable CD-R or CD-RW in the CDR disc tray.

2 Press the REC ● button on the main unit to put the CDR in the record pause mode.

- The remaining recording time on the disc appears in the display.

3 Select two recording sources to be mixed and recorded.

Example:
CD and LINE are selected.

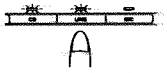

- Press the same button again to clear the selection.
- Select the CD and LINE buttons to mix and record a CD loaded in the 3-CD changer with the line input signals from an external source.
- Select the CD and MIC buttons to mix and record a CD loaded in the 3-CD changer with the input of a microphone connected to the MIC connector.
- Select the LINE and MIC buttons to mix and record the line input signals from an external source with the input of a microphone connected to the MIC connector.
- The lamps of the selected sources stop flashing and light. The other lamp goes off.
- Since analog signals are recorded, both the REC LEVEL and MIX BALANCE lamps light.

4 Play the two sources together and adjust the recording level and mixing balance.

CD + LINE	CD volume is reduced.	Line input volume is reduced.
CD + MIC	CD volume is reduced.	Mic input volume is reduced.
LINE + MIC	Line input volume is reduced.	Mic input volume is reduced.

- Adjust the volume in such a way that the 0 dB display of the level meter is not exceeded when the loudest sound is supplied.
- If the CD input is selected for mixed recording, the pitch controls may be used to adjust the speed of CD playback for mixing and recording purposes. (See page 15.).
- If the microphone level is set too high, you may experience a loud howling sound from your speakers. If this occurs, turn down the volume of the microphone by turning down the volume of the amp/receiver powering the speakers you are using to monitor the sound.
- When you have finished adjusting the recording level and the mix balance, set the sources back to the point where you want to start recording at.

5 Start playback of the sources to be recorded.

- If the CD1 button is pressed when mixing with a CD and recording the result, the tracks are recorded in the following sequence: CD1 → CD2 → CD3

6 Press the CDR CONTROL ▶ button to start the recording.

When recording is complete

After "STOP DUBBING" is displayed, operation stops automatically. Press the CDR CONTROL ■ (stop) button to stop the recording at any time.

Note

- Upon completion of recording, "STOP DUBBING" is displayed.
  Always wait for "STOP DUBBING" to be cleared before proceeding with the next operation.

Special Recording Edit Operations

Skipping a Recorded Track on a CD-R or CD-RW (Track Skip)

Occasionally, there may be tracks on a disc that are partial, repeated, or are otherwise unwanted. Before a CD-R or CD-RW is finalized, it is possible to put a skip marker for that track which is then disregarded in the TOC information at most 21 tracks per disk. When the disc is later finalized and played back, it will play back as if the track had never been recorded.

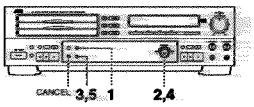

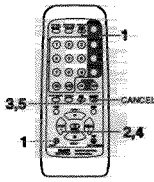

1 When the unit is in the stop mode, press the MENU button on the main unit (or the DISPLAY/MENU button on the remote control while holding down the SHIFT button).

2 Turn the MULTI JOG dial or press the ⏮/⏭ button on the remote control until "TRACK SKIP" appears in the display.

3 Press the SET button.

- "SKIP (track number)?" appears in the display.
- Press the CANCEL button if you do not wish to perform this procedure.

4 Turn the MULTI JOG dial or press the ⏮/⏭ button on the remote control to select the number of the track to be skipped.

5 Press the SET button.

- A skip marker is applied to the selected track, the TOC is updated to adjust the track numbers to exclude that track, and "WRITE SKIP" is displayed. When complete, the normal display is returned to.
- The track to be skipped is cleared from the music calendar.

Notes

- When a track is skipped, the total time on the disc and the total recording time remaining on the disc will be displayed as less than the total recording capacity of the disc.
- It is important to note, that while a skip marker can be applied to a track, this procedure cannot be reversed.
- Tracks that have been assigned TRACK SKIP markers are only skipped during playback on this unit and other compatible CD players with TRACK SKIP function.

Erasing a track or tracks (ERASE function)

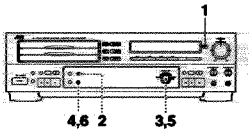

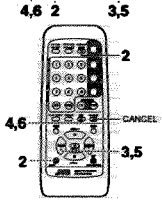

1 Load the unfinalized CD-RW to be edited, and set the function to CDR.

- The number of tracks and play time are displayed.

2 When the unit is in the stop mode, press the MENU button on the main unit (or the DISPLAY/MENU button on the remote control while holding down the SHIFT button).

3 Turn the MULTI JOG dial or press the ⏮/⏭ button on the remote control until "TRACK ERASE" appears in the display.

4 Press the SET button.

- "ERASE (start track) – (last track)" appears in the display. (Initially, the start track and the last track are both the last track number recorded on the CD-RW.)
- Press the CANCEL button if you do not wish to perform this procedure.

5 If needed, use the MULTI JOG dial on the main unit or press the ⏮ and ⏭ buttons on the remote control to set the number of tracks preceding the last track that you want to erase.

- Please note that all tracks following the start track will be erased. For example, when track 8 on an 11-track CD-RW is assigned as the start track, tracks 8, 9, 10, and 11 will be erased.

6 Press the SET button.

- After "ERASE TRACK" is displayed, the selected tracks are erased, and the normal display is returned to.
- The track to be erased is cleared from the music calendar.
- Tracks can only be erased from the end of the recording.

Notes

- Once a track is erased, the recording cannot be restored.
- Do not disconnect the power cord or subject the unit to the vibration during an erase operation. Doing so may make it impossible to play the CD-RW.

Erasing all the tracks (DISC ERASE function)

The DISC ERASE function clears all of the data recorded on a CD-RW. This procedure is recommended for discs that were interrupted during finalization or similar condition and do not play properly.

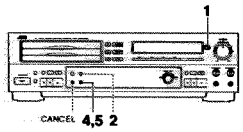

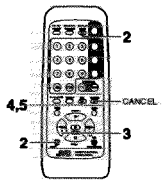

1 Load the unfinalized CD-RW to be edited, and set the function to CDR.

- The number of tracks and play time are displayed.

2 When the unit is in the stop mode, press the MENU button on the main unit (or the DISPLAY/MENU button on the remote control while holding down the SHIFT button).

3 Turn the MULTI JOG dial or press the ⏮/⏭ button on the remote control until "DISC ERASE" appears in the display.

4 Press the SET button.

- "ERASE DISC?" appears in the display.
- Press the CANCEL button if you do not wish to perform this procedure.

5 Press the SET button.

- This procedure takes several minutes to perform. When complete, the normal display is returned to.

Finalization

Finalization marks the final process in recording on a CD-R or CD-RW in which the TOC (Table Of Contents) is written to the disc. When this procedure is completed, it will be possible to play CD-R on CD players compatible with CD-R/CD-RW.

- **Please note that once a CD-R has been finalized, no more recording is possible on the disc.**
- If the power of the unit is turned off or the power plug is pulled from the wall outlet during the finalization process, the recording may be lost and the disc may not be usable.
- Even after a CD-RW has been finalized, further recording and editing is still possible if the TOC information on the disc is erased using the UNFINALIZE function. (See page 30.)
- When an unfinalized CD-R or CD-RW is loaded in the CDR and the EJECT ⏏ button is pressed to open the CDR disc tray, "FINALIZE?" appears in the display window. When this is the case, skip step 1 on this page.

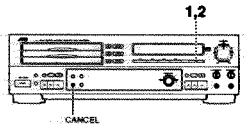

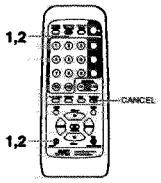

1 Press FINALIZE on the front panel (or press the SYNCHRO/FINALIZE button on the remote control while holding down SHIFT).

- "FINALIZE?" appears in the display window.
- If you want to cancel the finalization process at this point, press the CANCEL button on the main unit or remote control.

2 Press FINALIZE on the main unit (or press SYNCHRO/FINALIZE on the remote control while holding down SHIFT) again to start the finalization.

- **After the FINALIZATION button is pressed a second time, the finalization process starts. The length of time that this process requires is dependent on the amount of recorded material (generally about 2 minutes).**
- The 3-CD changer of this unit is compatible with finalized CD-RW, however, not all CD players can play back CD-RW even after they have been finalized.
- During the finalization process, it will not be possible to remove or load discs in the 3-CD changer, nor is playback of CDs loaded in the 3-CD changer possible.

Making recording possible again on a finalized CD-RW (UNFINALIZE function)

Once a CD-R has been finalized, further recording on that disc cannot be performed. However, by erasing the TOC (Table of Contents) on a CD-RW, the disc can be recorded on again.

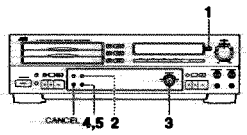

1 Load a CD-RW into the CDR deck.

- The CD-RW and FINALIZED indicators light for a CD-RW that has been finalized.

2 When the unit is in the stop mode, press the MENU button on the main unit (or the DISPLAY/MENU button on the remote control while holding down the SHIFT button)

3 Turn the MULTI JOG dial or press the ⏮/⏭ button on the remote control until "UNFINALIZE" appears in the display.

4 Press the SET button.

- "UNFINALIZE?" appears in the display.
- Press the CANCEL button to cancel the procedure and return to the normal display.

5 Press the SET button again to confirm the operation.

- "UNFINALIZE" appears in the display and the unfinalization procedure is performed. Upon completion, the normal display is returned to.

Bypassing the FS Converter (Sampling Frequency Converter) for More Efficient Digital Recording

The FS converter of this unit allows it to convert the digital signals of sources with sampling frequencies other than 44.1 kHz to the sampling frequency of 44.1 kHz necessary for it to be recorded to a CD-R or CD-RW.

When the FS converter is set to "OFF", the FS converter is bypassed when the digital signal of the source has a sampling frequency of 44.1 kHz (even if the FS converter is set to "OFF", the FS converter cannot be bypassed for digital signals with sampling frequencies other than 44.1 kHz). With this setting, the pure digital signal is preserved. When recording specially encoded discs such as DTS™ CD, HDCD™, etc., be sure to set this function to "OFF".

When the FS converter is set to "ON", the FS converter functions even when the sampling frequency of the digital signal is 44.1 kHz. The obvious merit of this setting is that it reduces jitter in disc playback. For this reason, setting this function to "ON" is recommended for most recording purposes.

"DTS is trademark of Digital Theater Systems, Inc.
"HDCD® is registered trademark of Pacific Microsonic, Inc.

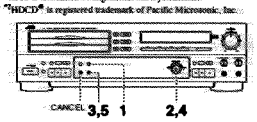

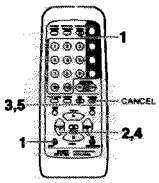

1 When the unit is in stop mode, press the MENU button (or the DISPLAY/MENU button on the remote control while holding down the SHIFT button).

2 Turn the MULTI JOG on the main unit or press the ⏮ and ⏭ buttons on the remote control until "CONVERTER" appears in the display.

3 Press the SET button.

- The current setting appears in the display. (The setting is on by default.)
- Press the CANCEL button if you do not wish to perform this procedure.

4 Turn the MULTI JOG on the main unit or press the ⏮ and ⏭ buttons on the remote control to select "ON" or "OFF".

- When the FS converter setting is set to "ON", the FS converter is used for all recording regardless of the frequency of the source.
- When the FS converter is set to "OFF", the FS converter is bypassed during input of digital sampling frequencies of 44.1 kHz and during multiple input recording. However, when source sampling frequencies of 32 kHz or 48 kHz are encountered, the FS converter is used regardless of the setting.
- Press the CANCEL button if you do not want to perform this procedure. The setting is not changed.

5 Press the SET button.

Setting Up Synchronized Start Recording for External Digital Sources (CD, MD, and DAT only)

When performing digital synchronized start recording of an externally connected digital source, synchronized start recording begins when a digital signal is encountered in the record pause mode. However, it is also possible to set this unit to start and stop recording when you are recording a single track.

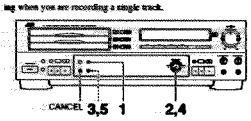

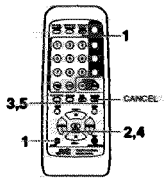

1 When the unit is in stop mode, press the MENU button (or the DISPLAY/MENU button on the remote control while holding down the SHIFT button).

2 Turn the MULTI JOG on the main unit or press the ⏮ and ⏭ buttons on the remote control until "D-IN SYNCHRO" appears in the display.

3 Press the SET button.

- The current setting appears in the display.

4 Turn the MULTI JOG on the main unit or press the ⏮ and ⏭ buttons on the remote control to select "START" or "START&STOP".

- When "START" is selected, only the start of the digital signal is recorded synchronously.
- When "START&STOP" is selected, both the start and stop of single track recording are controlled by information in the source digital signal.
- Press the CANCEL button if you do not want to perform this procedure. The setting is not changed.

5 Press the SET button.

- Please note that the type of synchronized recording being performed as set in the above procedure is not indicated in the display during actual recording. Even when recording is started, only the "SYNCHRO" indicator remains lit until recording is stopped.
- Even if this setting is set to "START&STOP", recording is concluded automatically if the source is stopped, the disc is changed, or if a track search is performed.

Resetting the Unit to the Factory Default Settings

By performing the following procedure, all program and time settings stored in the unit are cleared and the unit is reset to the factory default settings.

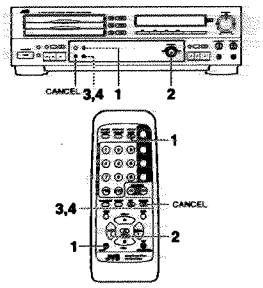

1 When the unit is in stop mode, press the MENU button (or the DISPLAY/MENU button on the remote control while holding down the SHIFT button).

2 Turn the MULTI JOG on the main unit or press the ⏮ and ⏭ buttons on the remote control until "SET DEFAULT" appears in the display.

3 Press the SET button.

- "SET DEFAULT?" appears in the display.
- Press the CANCEL button if you do not want to perform this procedure.

4 Press the SET button.

- The unit is reset to the factory default settings and the unit is put in the stop mode.

Setting the Clock

Setting the Present Time

(To be performed when the unit is to be used for the first time.)

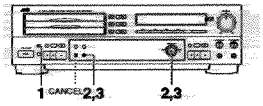

Example: Setting the time to 1:15 PM (while the power is switched to STANDBY).

This unit uses a 12-hour clock to indicate the time.

1 Press the CLOCK/TIMER button.

- The time display is illuminated, and the "hour" indicators starts flashing.

(When the time is to be re-set, the present time will flash.)

2 Turn the MULTI JOG dial to change the hour display to "PM 1", and then press the SET button.

- The hour display stops flashing, and the minute display starts to flash.

Turn the MULTI JOG until "PM 1:00" is displayed. Press the SET button. "PM 1:00" is then displayed.

PM 1:00 PM 1:00

3 Turn the MULTI JOG dial to change the minute display to "15", and then press the SET button.

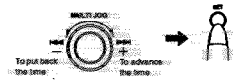

Turn the MULTI JOG until "PM 1:15" is displayed. Press the SET button. "PM 1:15" is then displayed.

PM 1:15 PM 1:15

- The current time "1:15" is displayed and the display window darkens.

- If you made a mistake in entering the current time, repeat this procedure from the beginning.
- If the CANCEL button is pressed while setting the "minute" display, the flashing "hour" display is restored. This function comes in handy for correcting the "hour" display.

To ascertain the correct time

In most areas, there is a telephone number you can call for the correct time, consult your telephone directory for assistance.

To change or adjust the time display

It is possible to change the time even after it has been set. Press the CLOCK/TIMER button repeatedly to select the time display, and set the time as described in the procedure on this page. The time can be adjusted even when the unit is in standby.

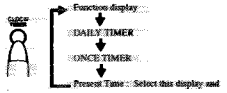

Regarding the time display

- The time display for Canada and USA models uses a 12-hour clock.
- Models for other countries use a 24-hour clock.

The illustrations in this Instruction Manual show the Canada and USA model. For users of other models, please note that "AM" and "PM" indications will not be displayed as shown in this manual. Please refer to the illustrations below for differences in the two time display types.

For Canada and USA	For other countries
PM 1:00	13:00

- The time display cannot be switched between the 12-hour and 24-hour clock display.

Timer Operations

Timer Play (wake-up play)

Before proceeding with timer programming, make sure that the present time has been set correctly. (See page 33.)

Example: Setting the unit to turn on and play a CD from 7:15 AM to 8:15 AM.

1 Turn on the power.

- The selected function ("CD" at the time of purchase) is displayed.

2 Press CLOCK/TIMER repeatedly to select the timer mode (DAILY TIMER or ONCE TIMER).

- The mode changes each time this button is pressed.

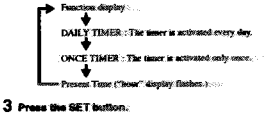

3 Press the SET button.

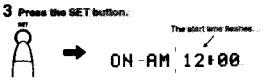

4 Turn the MULTI JOG dial to set the hour display to "AM 7", and press SET.

- The hour display stops flashing and the minute display starts to flash.

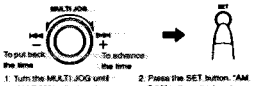

1. Turn the MULTI JOG until "AM 7:00" is displayed. 2. Press the SET button. "AM 7:00" is then displayed.

AM 7:00 AM 7:00

5 Turn the MULTI JOG dial to change the minute display to "15", and then press the SET button.

- The hour display of the timer stop time starts to flash.

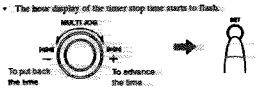

3. Turn the MULTI JOG until "AM 7:15" is displayed. 4. Press the SET button. "OFF AM 12:00" is then displayed.

The end time flashes.

AM 7:15
OFF AM 12:00

6 Turn the MULTI JOG dial to set the hour display to "8", and press SET.

- The hour display stops flashing and the minute display starts to flash.

1. Turn the MULTI JOG until "AM 8:00" is displayed. 2. Press the SET button. "AM 8:00" is then displayed.

AM 8:00 AM 8:00

7 Turn the MULTI JOG dial to change the minute display to "15", and then press the SET button.

- "PLAY" is displayed.

3. Turn the MULTI JOG until "AM 8:15" is displayed. 4. Press the SET button. "PLAY" is then displayed.

AM 8:15 PLAY

When "Play" is displayed, it is necessary to set the Timer Play or Timer Recording function.
For Timer Play and Timer Recording, see the procedure on the following page.

Note

- If the CANCEL button is pressed while setting the "minute" display, the flashing "hour" display is restored. This function comes in handy for correcting the "hour" display.

8 While "PLAY" is flashing, press the SET button.

- This display appears when the DAILY TIMER play mode is set.

- When "REC" flashes, turn the MULTI JOG dial until "PLAY" flashes.

9 Turn the MULTI JOG dial to set the function to CD or CDR.

10 Press the SET button.

11 Turn the power to standby.

The present time now appears in the display window.

Notes

- Timer functions cannot be performed if the unit is on when the set time arrives. Make sure that the unit is put in standby for timer functions to operate.
- Match the connected receiver or other source with the unit's setting, and adjust the volume to the appropriate level. Match the timer with the unit's timer setting.
- Timer play starts at the programmed start time, and the power is switched to STANDBY at the programmed end time.

Clearing a timer operation

Press the CLOCK/TIMER button, select the timer mode, and press the CANCEL button. "DAILY OFF" appears in the display, the DAILY ⏲ (or ONCE ⏲) indicator is cleared, and the timer operation is also canceled.

Timer Recording (unattended recording of the sound from a broadcast receiver or other component)

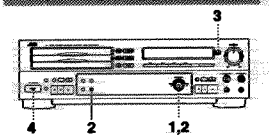

1 Perform steps 1 to 7 of the procedure described in "Timer Play (wake-up play)" on page 34.

2 While "PLAY" is flashing, turn the MULTI JOG dial to select "REC?" and press the SET button.

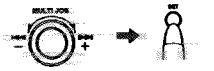

3 Turn the MULTI JOG dial to select the sound source to be recorded, and press the SET button.

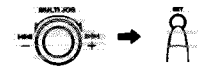

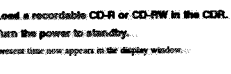

4 Load a recordable CD-R or CD-RW in the CDR.

5 Turn the power to stand-by.

The present time now appears in the display window.

Notes

- Match the tuner of the connected source with the unit's setting. (In the case of the mic input, ensure that the microphone has been connected to the unit.)
- Recording starts at the programmed start time, and the power will be switched to STANDBY at the programmed end time. When operation is completed once in the ONCE TIMER mode, the timer programming is cleared.
- If digital signals are not supplied when timer recording has been started with digital input signals, "DIGITAL IN UNLOCK" is scrolled on the display, and no signals will be recorded.
- When using the timer to record a digital satellite broadcast program, for instance, check that the broadcast station with the desired program can be tuned in correctly before programming the timer start and end times.

COMPU LINK Function

What is COMPU LINK?

The COMPU LINK remote control system (or, simply, "COMPU LINK") serves to enable the kind of simple operations provided by an integrated system to be performed even though this unit is a separate component.
These simple operations can be performed by connecting the COMPU LINK-4 SYNCHRO, COMPU LINK-3 SYNCHRO or COMPU LINK-1 SYNCHRO connector on each of the components involved.

Connections

Accessory connecting cables

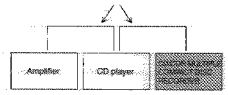

The COMPU LINK functions provided with JVC products come in the form of COMPU LINK-4, COMPU LINK-3 or COMPU LINK-1. They are compatible, and the difference between them is that COMPU LINK-3 has the functions of COMPU LINK-1 with some additional functions as well.

COMPU LINK functions compatible with this unit

Automatic power on/standby
Selecting a source on the amplifier/receiver automatically turns on the relevant component. Similarly, turning a linked component on or standby automatically turns the amplifier/receiver on or standby.

Automatic source selection
Selecting a source on the connected amplifier/receiver automatically starts its operation. Similarly, starting operation of a linked component will automatically select the relevant source on the amplifier/receiver.
When this unit is selected as the source, if there are discs loaded in both the 3-CD changer and the CDR, playback priority is given to discs loaded in the 3-CD changer.

Notes

- The type of interactive operation described above requires that your JVC amplifier/receiver feature COMPU LINK-4, or it will not be compatible with this unit (the CDR will not be recognized by previous COMPU LINK versions). When your JVC amplifier/receiver does not feature COMPU LINK-4, set the COMPU LINK MODE switch on the rear panel of this unit to "TD", and make connections to the tape deck connectors on the amplifier/receiver. Doing this enables you to use this unit with the COMPU LINK functions, however, COMPU LINK control of a cassette deck will no longer be possible.
- Synchro recording using the compu link is not compatible with this unit.

CDR Messages

Message	Significance	Remedy
BLANK DISC	A CD-R or CD-RW with nothing recorded on it has been inserted.	Replace with a pre-recorded CD unless something is to be recorded onto the blank CD-R or CD-RW.
DISC ERROR	Trouble with CDR (damage).	Replace the CDR.
DISC FULL	The CD-R or CD-RW does not have enough available time.	Replace with another recordable CD-R or CD-RW. Finalization of the disc is recommended.
EMERGENCY STOP	An error occurred during recording.	Stop operation by pressing the ■ (stop) button, and perform the operation again.
CDR NO DISC	A CD-R or CD-RW has not been inserted.	Insert a CD-R or CD-RW.
NON AUDIO CANNOT COPY	An attempt was made to digitally copy a CD-ROM (or Video CD, etc.).	Stop the recording.
CANNOT DUB	An attempt was made to digitally record a digitally recorded source.	Set to analog recording.
PMA FULL OPC FULL	Although time remains on the disc, the PMA or PCA area is full, preventing further recording. PMA is an abriviation of Program Memory Area. PCA is an abriviation of Power Calibration Area.	Finalization of the disc is recommended.
CANNOT REC	The disc contains 99 tracks, and further recording cannot be performed.	
ALREADY FINAL	The disc loaded in the CDR is a finalized CD-R or CD-RW.	Replace the disc with a disc that can be recorded on.

Restriction on Copying Digital Material

Due to copyright and other considerations, the following restriction is now in place for CD-R and CD onto which the digital signals of CDs have been copied.

SCMS (Serial Copy Management System)

The digital quality of CDs and other digital media can be recorded to CD-R and CD-RW using the CDR function of this unit. However, it is not possible to make a second generation digital copy from a first generation copy. This restriction, known as SCMS (Serial Copy Management System), is intended to prevent unlimited digital copying in the interests of artists and other copyright holders.
This unit is designed to comply with SCMS restrictions.

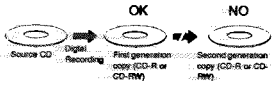

The copyright laws allow recordings to be made for the personal enjoyment of the individual user but they do not allow such recordings to be used for other any purposes without permission from the holder of the copyrights.

Note

- If digital recording of a first generation digital copy is attempted, "CANNOT DUB" appears in the display window, and the recording operation is canceled. When the first generation copy is a finalized CD-R or CD-RW loaded in the 3-CD changer, the recording type is automatically changed from digital to analog, and the recording type indicator light accordingly. (If high speed dubbing was turned on, it will be turned when the recording type is changed.)

Troubleshooting

	Symptom	Cause	Remedial action/check	Ref
COMMON	No sound.	• A CD-R or CD-RW with nothing recorded on it has been inserted. ("BLANK DISC" is displayed.)	• Replace the disc with one on which tracks have been recorded.	
	The time display flashes in the display window.	• A power failure has occurred or the power cord has been disconnected.	• Set the clock and re-program the timer.	33
CD PLAYER	Play fails to start	• The CD has been inserted upside down.	• Insert it properly with the label side facing up.	11
		• Condensation has formed on the lens.	• Turn on the power and wait for a couple of hours.	2
	Specific parts are not played properly.	• The CD is scratched.	• Replace the CD.	11
CDR	Recording is not possible.	• The CD-R or CD-RW was loaded in the tray upside-down.	• Load the disc with the label side up.	12
		• The CD-R or CD-RW is already finalized. • Further recording on a finalized CD-RW is only possible if the UNFINALIZE function is used.	• Replace with a disc that can be recorded on.	29
		• The source being copied is already a digital copy itself.	• Perform analog recording of the source.	18
		• There is dust or scratches on the surface of the disc.	• Clean the disc using a commercially available disc cleaner. If that is not effective, replace the disc.	18
TIMER	Timer fails to start.	• Present time is not correct. • The timer display fails to appear.	• Set the time properly. • Press the TIMER button so that the timer display appears.	33
REMOTE CONTROL	No remote control operations.	• The dry batteries in the remote control have discharged.	• Replace them with two fresh batteries (AA (15F), R6, SUM-3).	9
		• The remote control sensor is exposed to direct sunlight or some other intense source of light.	• Move the unit so that the sensor is not exposed to direct sunlight, a lighting fixture or some other intense source of light.	9

If the unit fails to operate properly even when the remedial action suggested above has been taken:

This unit uses a microcomputer to perform a large number of operations. If it fails to operate no matter which button is pressed, disconnect the power cord, and then wait a few moments before re-connecting it. Then set the time and re-program the timer.

Notes:

- If something important is going to be recorded, always test-record first to check that the recording turns out properly before proceeding with the actual recording.
- The manufacturer assumes no liability whatsoever for any damages resulting from missed opportunities or accidental erasure that occurs while conducting recording or play operations due to malfunctioning of or trouble in the unit, or for any incidental damage.

Main Specifications

The unit's specifications and exterior are subject to change without notice due to improvements.

CD Player Section

System	Compact disc digital audio system
Pitch control	±12%
Signal-to-noise ratio	94 dB
Dynamic range (1 kHz)	91 dB
Frequency response	20 Hz – 20 kHz
Wow and flutter	Less than measurable limit
Total harmonic distortion	0.0063%

CDR Section

System	Compact disc digital audio recording system
Sampling frequency	44.1 kHz
Frequency response	20 Hz – 20 kHz
Inputs: Analog (LINE IN)	Minimum input level: 500 mV (Full scale –12 dB)/50 kΩ
Digital (optical)	Input level: –23 dBm – –15 dBm
Microphone	Minimum input level: 3 mV (Full scale –12 dB)/600 Ω – 10 kΩ matching impedance
Signal-to-noise ratio	97 dB (during playback)
Dynamic range (1 kHz)	93 dB (during playback)
Wow and flutter	Less than measurable limit
Total harmonic distortion	0.0042% (during playback)

Timer Section

Timer system	DAILY TIMER operation (ON/OFF timer) ONCE TIMER operation (ON/OFF timer)
Clock display	12-hour display (for Canada and U.S.A.) 24-hour display (for other countries)

Common Specifications

Output connectors:	
Analog	LINE x 1 set, 2 V/5 kΩ (Full scale) Headphones x 1, 4 mW/32 Ω, 8 Ω – 1 kΩ matching impedance
Digital	OPTICAL x 1, –21 dBm – –15 dBm
Other connectors	COMPU LINK-4/SYNCHRO x 2
Power requirements	AC 120V ∿, 60 Hz (for Canada & USA)/AC 230V ∿, 50Hz (for UK) AC 110V/127V/230V, 50Hz/60Hz (for other countries)
Power consumption	29 W in power ON mode; 6 W in STANDBY mode
Dimensions	435 mm x 127 mm x 325 mm (W x H x D) (17-3/16" x 5" x 12-13/16")
Mass	Approx. 6.3 kg (13.9 lbs)

Accessories

Remote control (RM-SXLR5000E for Canada & USA), (RM-SXLR5000E for other countries) x 1
AA (15F), R6, SUM-3 dry batteries (to check operation of remote control) (2)
Pin cables (2)
COMPU LINK-4 cable (1)

Mains (AC) Line Instruction (not applicable for Europe, U.S.A., Canada, Australia and U.K.)

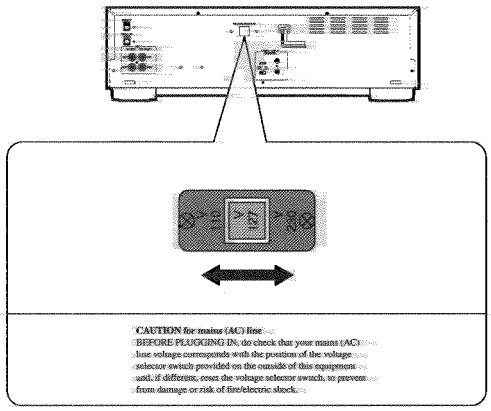

EN

JVC
VICTOR COMPANY OF JAPAN, LIMITED

Printed in Japan
0400RIMWSTOJK

Disassembly method

<Main Body>

■Removing the top cover

(See Fig.1 and 2)

1. Remove the four screws A on both sides of the body.
2. Remove the two screws B on the back of the body.
3. Remove the top cover from behind in the direction of the arrow while pulling the lower part of the top cover sides outwards.

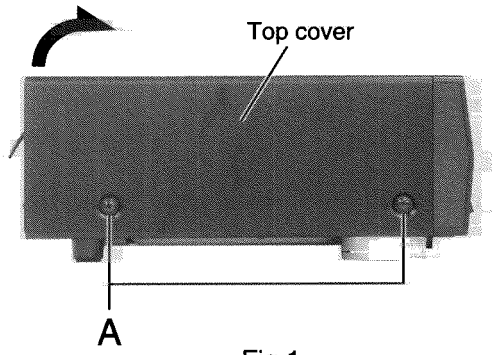

Fig.1

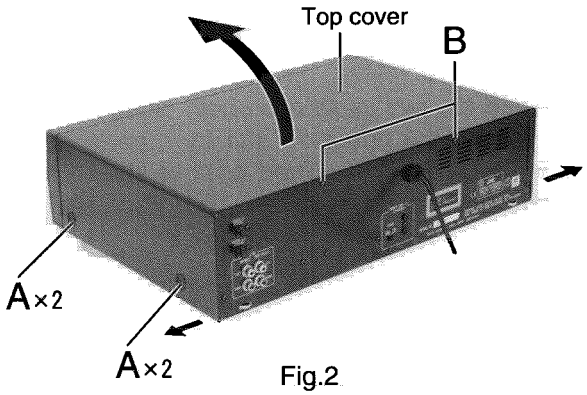

Fig.2

■Removing the CD changer mechanism assembly (See Fig.3 and 4)

- Prior to performing the following procedure, remove the top cover.

1. Disconnect the card wire from connector CN811 on the main board.
2. Remove the four screws C attaching the CD changer mechanism assembly.
3. Remove the CD changer mechanism assembly backward, then upward.

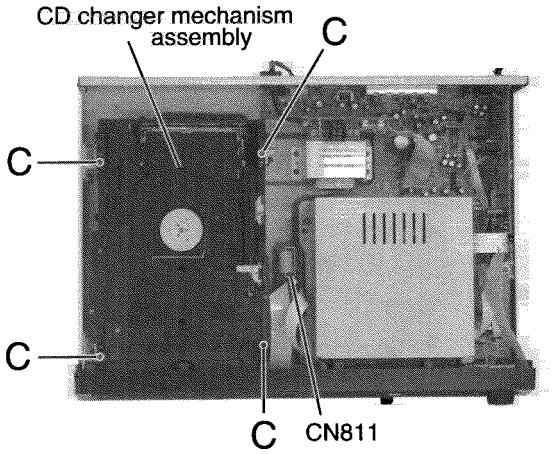

Fig.3

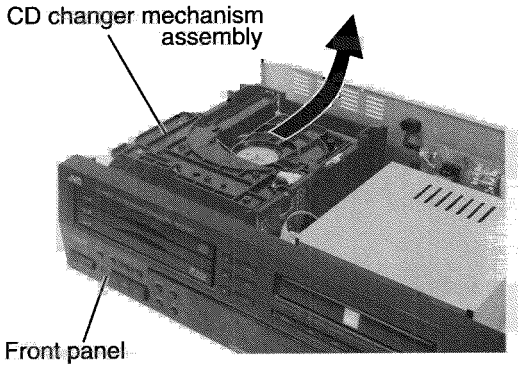

Fig.4

■Removing the front panel assembly (See Fig.5 to 9)

- Prior to performing the following procedure, remove the top cover.

1. Disconnect the card wires from connector CN501, CN502, CN841, CN842 and CN861 on the main board.
2. Remove the screw D attaching the microphone & headphone board to the base chassis.
3. Remove the five screws E attaching the front panel assembly at the bottom of the body.
4. Release the two joints a on both sides and the two joints b on the bottom of the front panel assembly using a screwdriver. Then remove the front panel assembly toward the front.

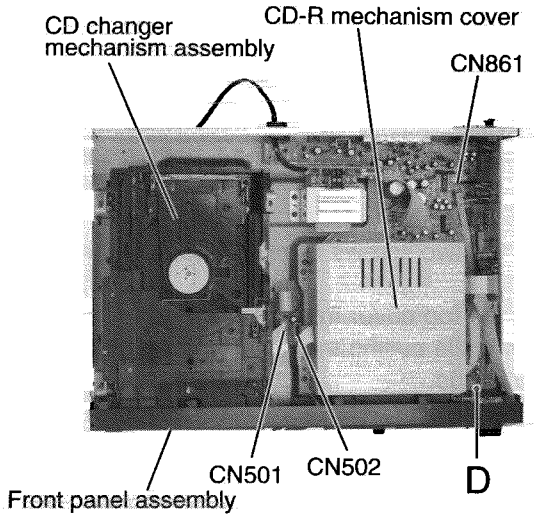

Fig.5

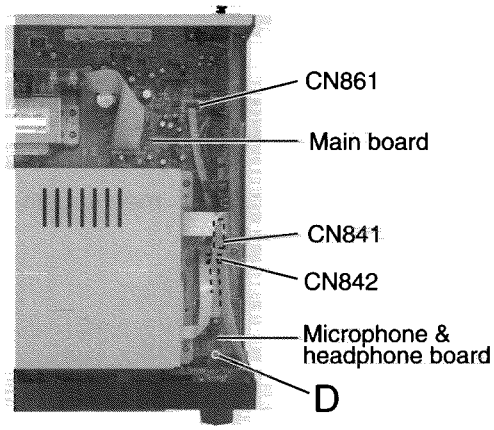

Fig.6

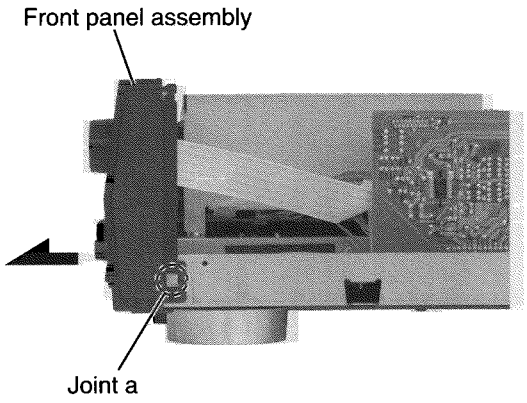

Fig.8

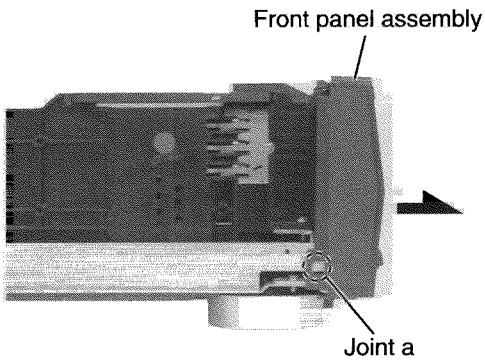

Fig.9

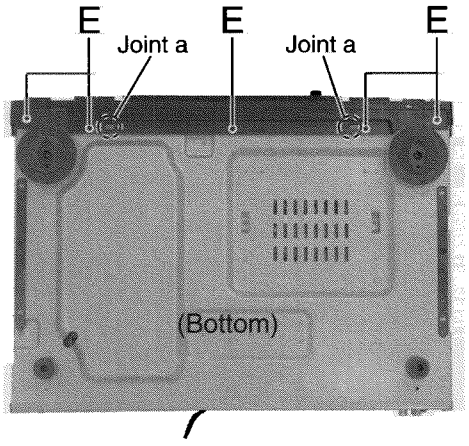

Fig.7

■Removing the CD mechanism assembly (See Fig.10 to 13)

- Prior to performing the following procedure, remove the top cover and the front panel assembly.

1. Remove the four screws F attaching the CD-R mechanism cover.
2. Disconnect the card wires from connector CN501 and CN601, and the harnesses from CN502 and CN701 of the servo board on the left side of the CD mechanism assembly.
3. Spin the dial on the front of the CD-R mechanism assembly as shown in the figure and draw the tray assembly toward the front.
4. Move the tray assembly until it stops.
5. Remove the two screws G and the two screws H attaching the CD-R mechanism assembly.

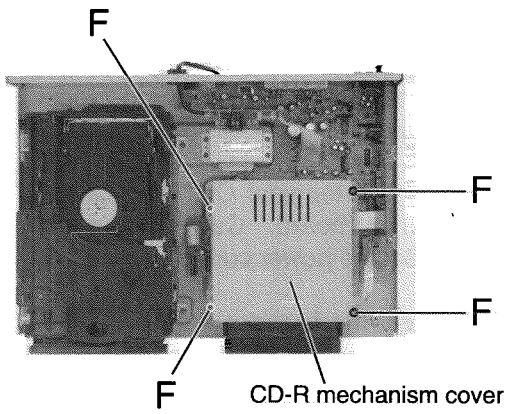

Fig.10

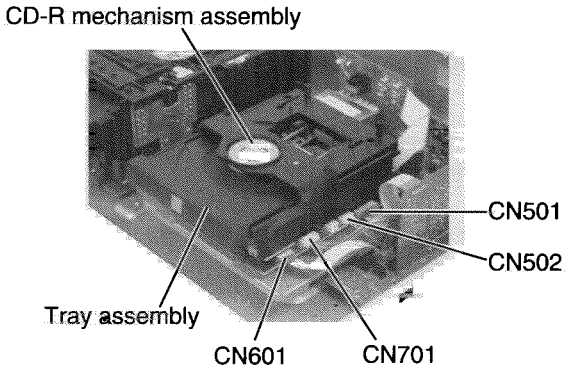

Fig.11

■Removing the rear panel (See Fig.14)

- Prior to performing the following procedure, remove the top panel.

1. Remove the seven screws I and the three screws J on the back of the body.

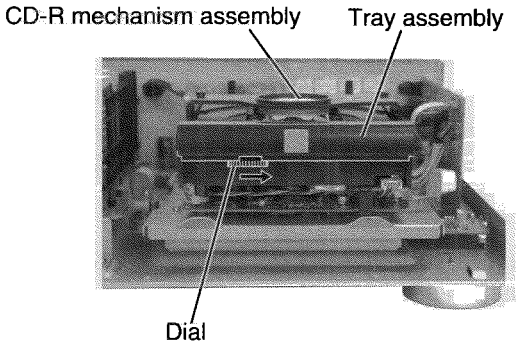

Fig.12

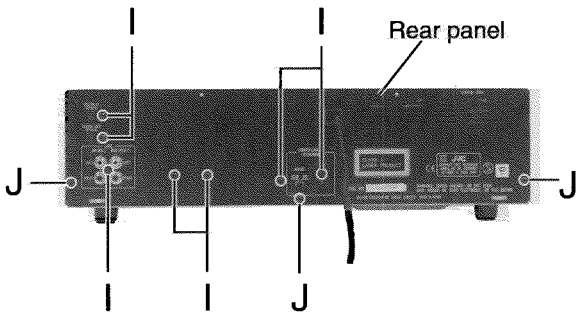

Fig.14

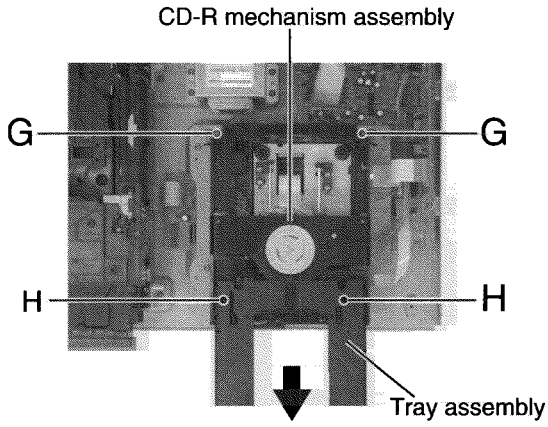

Fig.13

■Removing the power transformer

(See Fig.15)

- Prior to performing the following procedure, remove the top panel.

1. Unsolder the terminal CN1 and CN2 on the power transformer board. Cut off the tie band and disconnect the power cord.
2. Disconnect the harness from connector CN901 and CN902 on the main board.
3. Remove the four screws K attaching the power transformer.

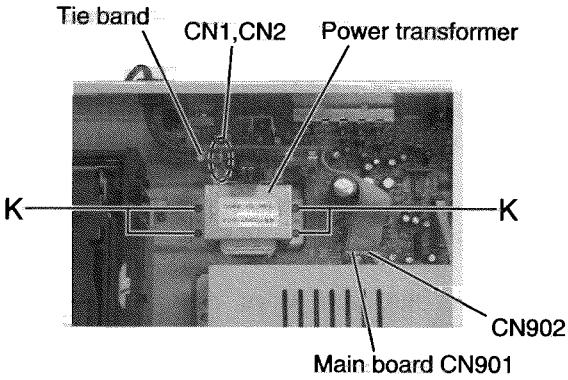

Fig.15

■Removing the external control board

(See Fig.16)

- Prior to performing the following procedure, remove the top panel and the rear panel.

1. Disconnect the card wire from connector CN506 and the harness from CN802 on the external control board.
2. Disconnect connector CN351 and CN361 on the external control board from the main board.

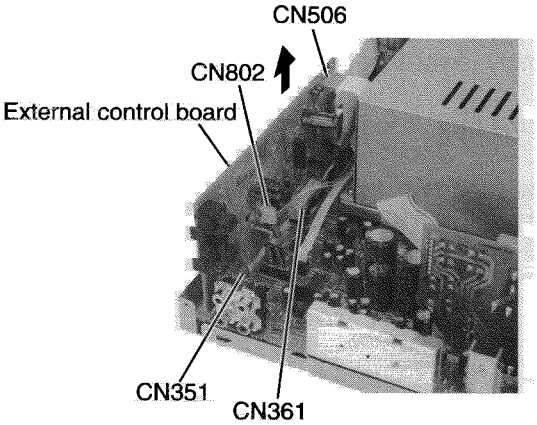

Fig.16

■Removing the main board

(See Fig.17 and 18)

- Prior to performing the following procedure, remove the top panel, the front panel, the CD-R mechanism assembly and the rear panel.

1. Remove the four screws L attaching the CD-R mechanism base.
2. Disconnect the card wire from connector CN811 and the harnesses from CN901 and CN902 on the main board.
3. Remove the four screws M attaching the main board. If necessary, remove the external control board.

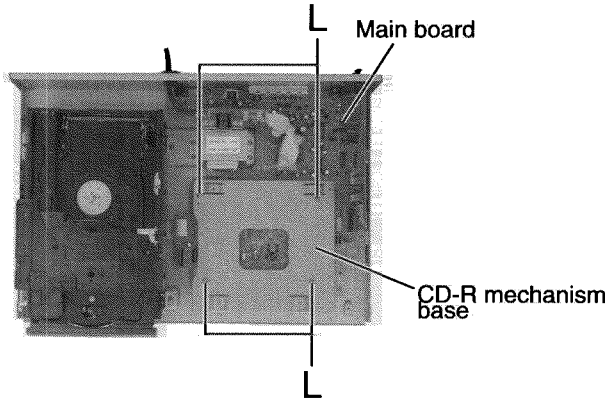

Fig.17

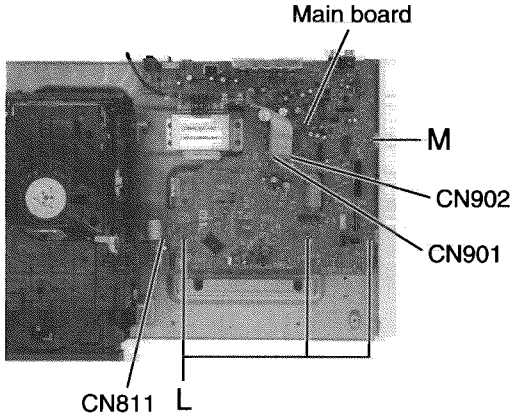

Fig.18

<Front panel assembly>

- Prior to performing the following procedure, remove the top cover and the front panel assembly.

■Removing the operation switch board / the display board (See Fig.19 and 20)

1. Disconnect the relay board.
2. Remove the five screws N and the operation switch board from the front panel.
3. Pull out the two control knobs, the REC LEVEL knob and the MULTI JOG knob respectively.
4. Remove the ten screws O and the display board from the front panel.

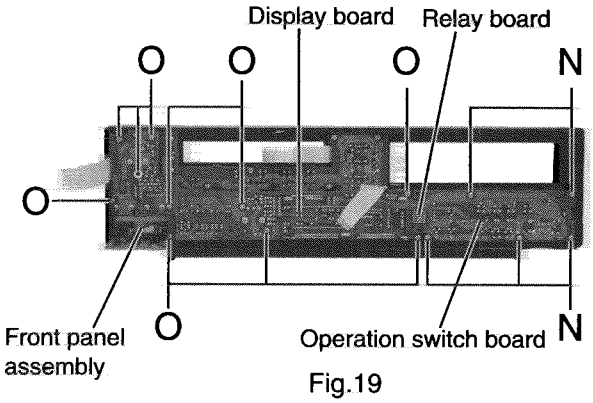

Fig.19

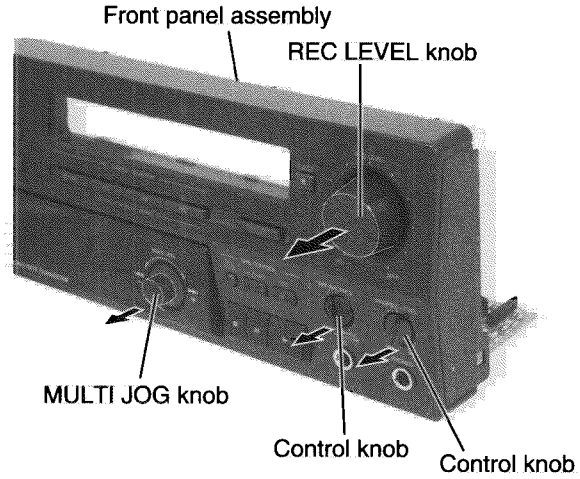

Fig.20

■Removing the operation switch board (See Fig.21)

- Prior to performing the following procedure, remove the relay board and the display board.

1. Remove the eight screws P and the operation switch board from the front panel.

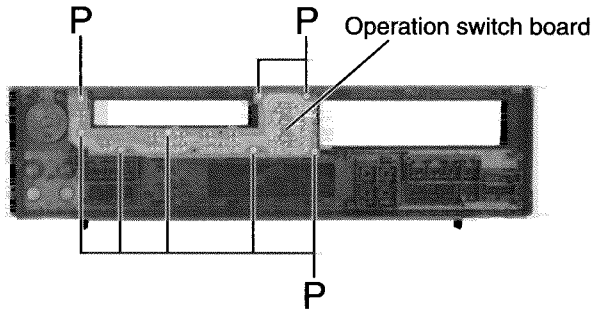

Fig.21

■Removing the microphone & headphone amplifier board (See Fig.22 to 24)

1. Remove the screw Q attaching the microphone & headphone amplifier board.

2. Release the bracket tabs c from the bottom of the front panel.

3. Remove downwards the snap plate attaching the bracket to the microphone & headphone amplifier board as shown in the figure.

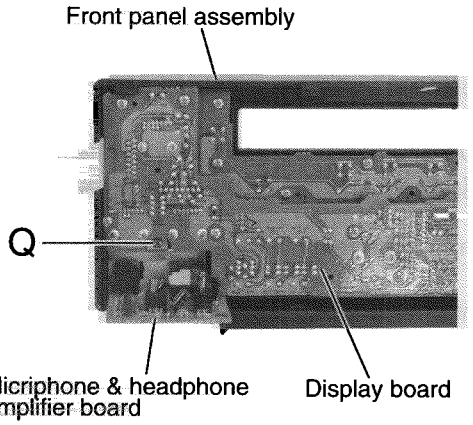

Fig.22

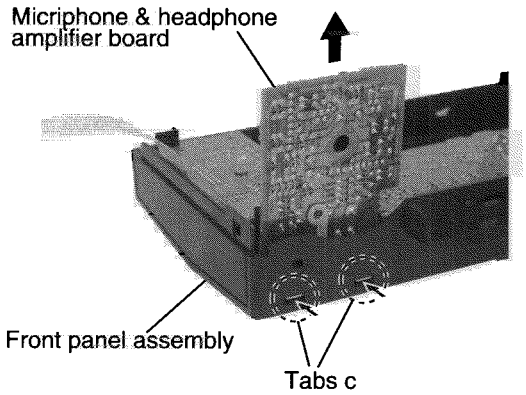

Fig.23

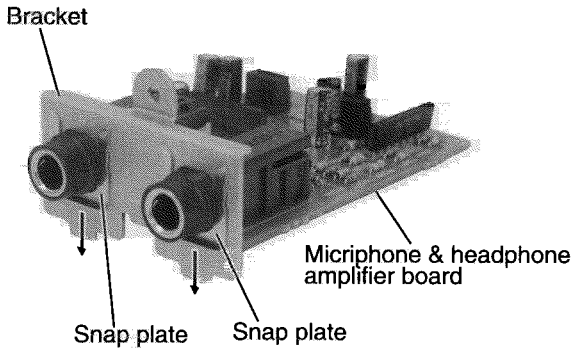

Fig.24

≪CD Changer Mechanism Type:VC3 Section≫

■Removing the CD Servo control board (See Fig.1)

1.Remove the metal cover.
2.Remove the CD changer mechanism assembly.
3.From bottom side the CD changer mechanism assembly, remove the two screws 1 retaining the CD servo control board.
4.Absorb the four soldered positions "M" of the right and left motors with a soldering absorber.
5.Pull out the earth wire on the CD changer mechanism assembly.
6.The two screws A is removed and C.B.holder is detached.
7.Disconnect the connector CN854 on the CD servo control board.
8.Disconnect the card wire CN601 and the connector CN801 on the CD servo control board.

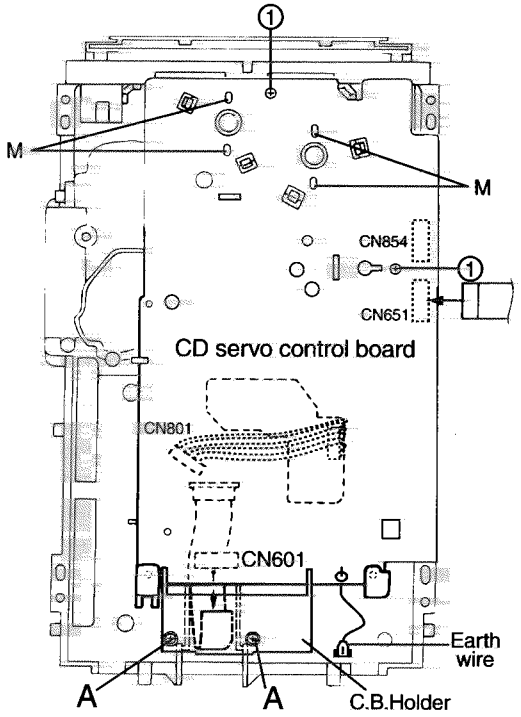

Fig.1

■Removing the CD tray assembly (See Fig.2~4)

1. Remove the front panel assembly.
2. Remove the CD changer mechanism assembly.
3. Remove the CD Servo control board.
4. From the T.bracket section "B" and clamper base section "C" , remove both of the edges fixing the rod(See Fig.2 and 3).
5. Remove the screw 2 retaining the Disc stopper (See Fig.3).
6. Remove the three screws 3 retaining the T.bracket (See Fig.3).
7. Remove the screws 4 retaining the clamper assembly (See Fig.3).
8. From the left side face of the chassis assembly, remove the one screw 5 retaining both of the return spring and lock lever(See Fig. 4).
9. By removing the pawl at the section "D" fixing the return spring, dismount the return spring(See Fig.4).
10. Remove the three lock levers(See Fig.4).

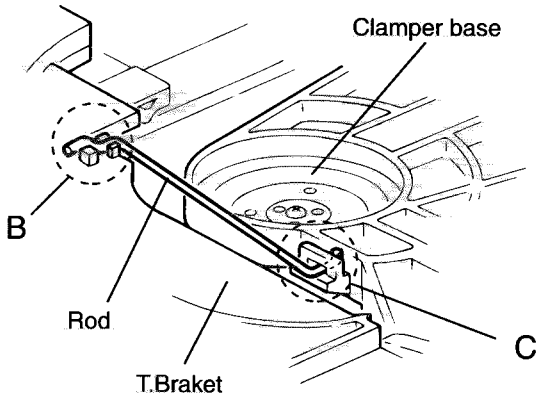

Fig.2

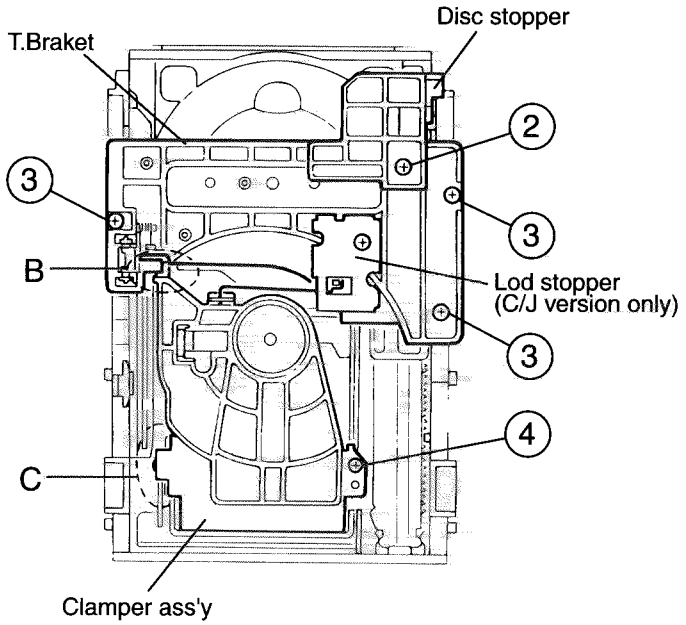

Fig.3

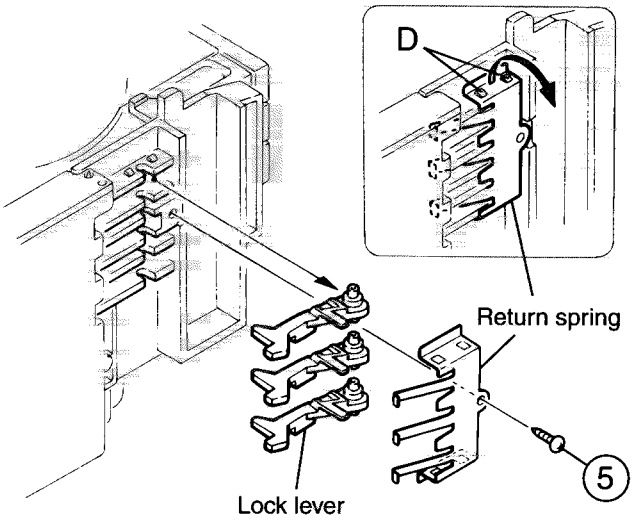

Fig.4

11. Check whether the lifter unit stopper has been caught into the hole at the section "E" of CD tray assembly as shown in Fig.5.
12. Make sure that the driver unit elevator is positioned as shown in Fig.6 from to the second or fifth hole on the left side face of the CD changer mechanism assembly.

[Caution] In case the driver unit elevator is not at above position, set the elevator to the position as shown in Fig.7 by manually turning the pulley gear as shown in Fig.8.

13. Manually turn the motor pulley in the clockwise direction until the lifter unit stopper is lowered from the section "E" of CD tray assembly(See Fig.8).
14. Pull out all of the three stages of CD tray assembly in the arrow direction "F" until these stages stop (See Fig.6).
15. At the position where the CD tray assembly has stopped, pull out the CD tray assembly while pressing the two pawls "G and G" on the back side of CD tray assembly(See Fig.9). In this case, it is easy to pull out the assembly when it is pulled out first from the stage CD tray assembly.

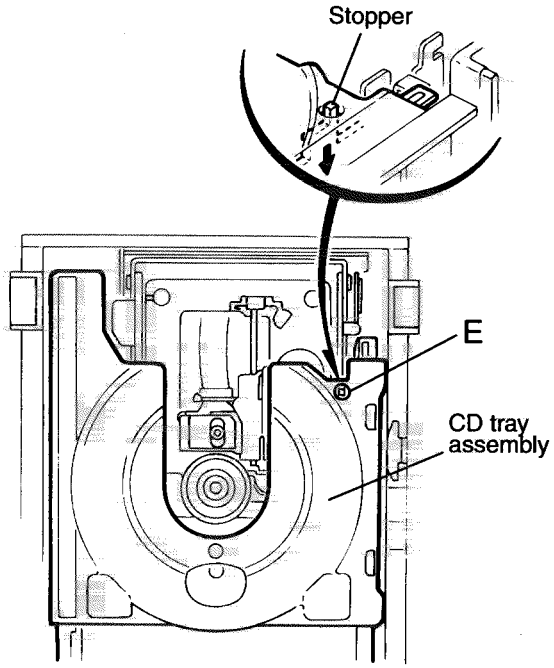

Fig.5

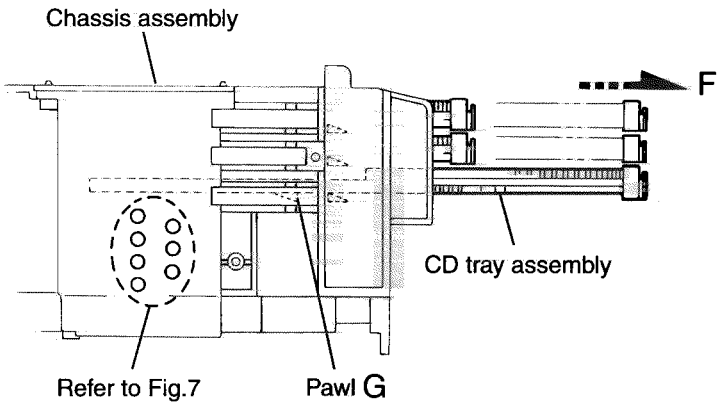

Fig.6

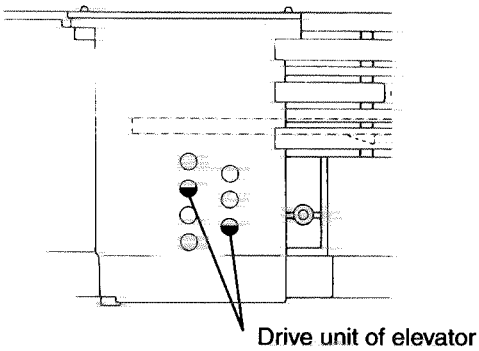

Fig.7

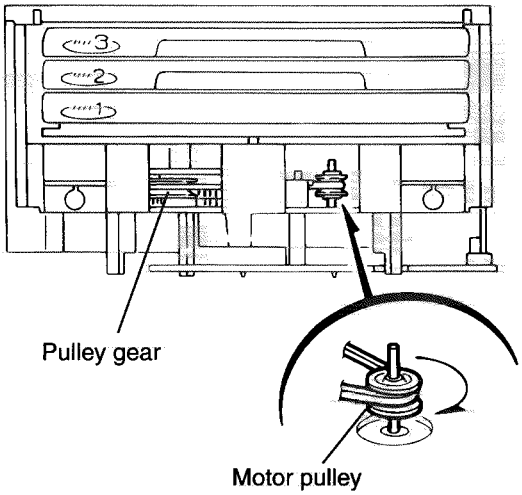

Fig.8

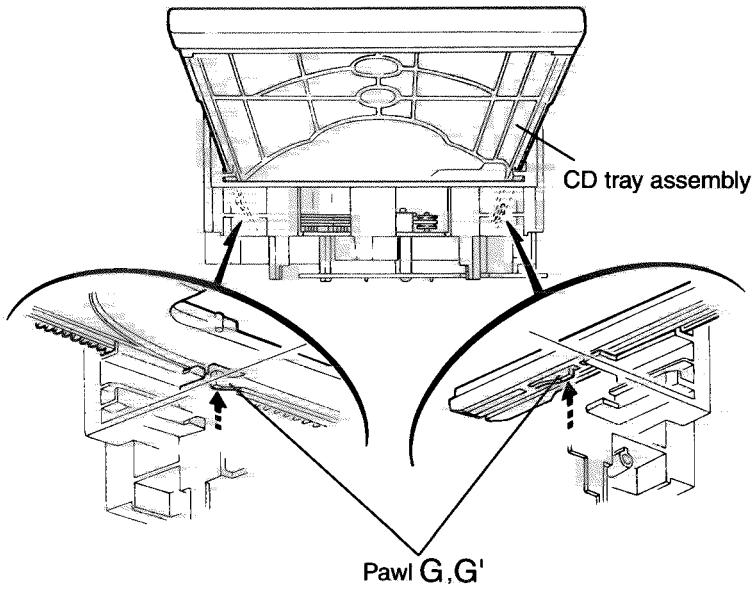

Fig.9

■ Removing the CD loading mechanism assembly(See Fig.10)

1. While turning the cams R1 and R2 assembly in the arrow direction "H" , align the shaft "I" of the CD loading mechanism assembly to the position shown in
2. Fig.10.
   Remove the four screws 6 retaining the CD loading mechanism assembly.

■ Removing the CD traverse mechanism (See Fig.11 and 12)

1. For dismounting only the CD traverse mechanism without removing the CD loading mechanism assembly, align the shaft "J" of the CD loading mechanism assembly to the position shown Fig.11 while turning the cam R1 and R2 assembly in the arrow direction "K" .
2. By raising the CD loading mechanism assembly in the arrow direction "L" , remove the assembly from the lifter unit

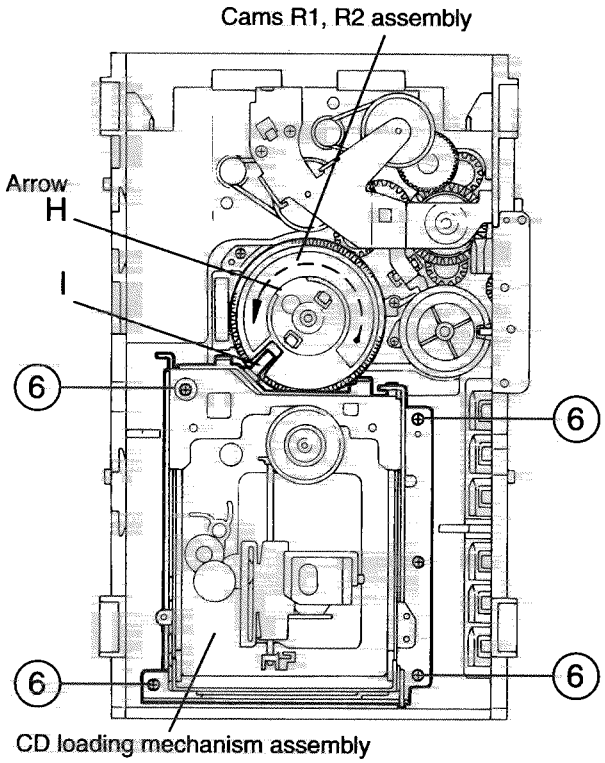

Fig.10

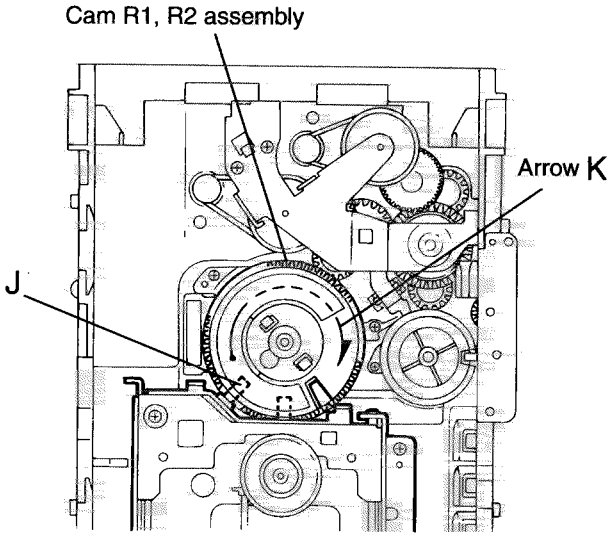

Fig.11

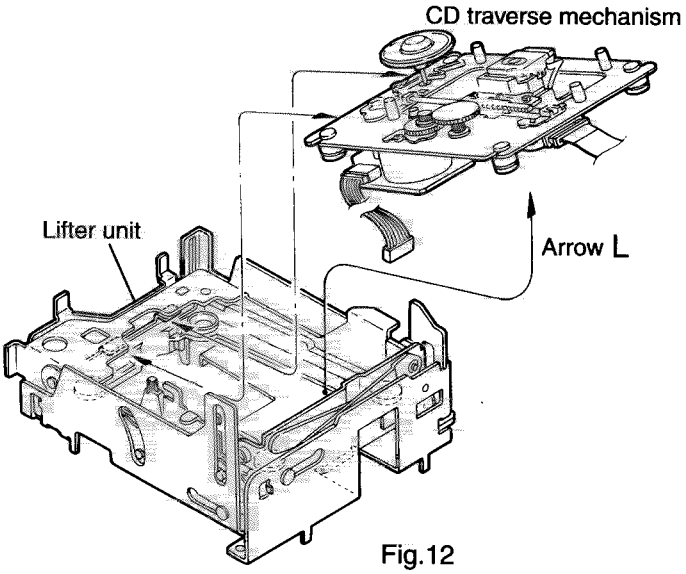

Fig.12

■ Removing the CD pick unit (See Fig.13)

1. Move the cam gear in the arrow direction a . Then, the CD pickup unit will be moved in the arrow direction b .
2. According to the above step, shift the CD pickup unit to the center position.
3. While pressing the stopper retaining the shaft in the arrow direction c , pull out the shaft in the arrow direction d .
4. After dismounting the shaft from the CD pickup unit, remove the CD pickup unit

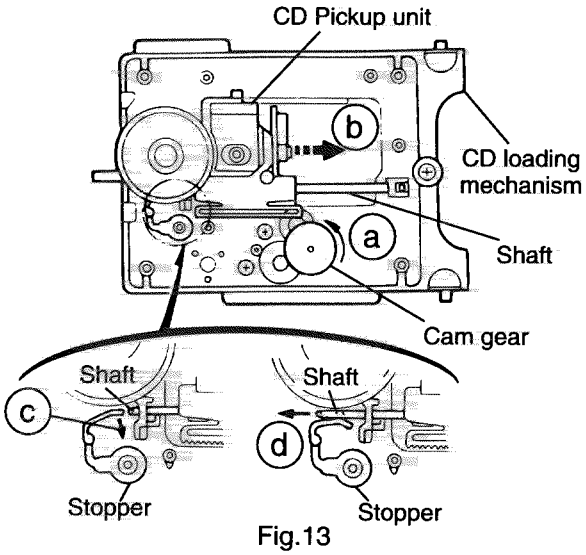

Fig.13

■ Removing the cam unit
(See Fig.14 to 17)

1. Remove the CD loading mechanism assembly.
2. While turning the cam gear L, align the pawl "N" position of the drive unit to the notch position(Fig.16) on the cam gear L.
3. Pull out the drive unit and cylinder gear(See Fig.16).
4. While turning the cam gear L, align the pawl "O" position of the select lever to the notch position(Fig.17) on the cam gear L.
5. Remove the four screws 9 retaining the cam unit(cam gear L and cams R1/R2 assembly)(See Fig.17

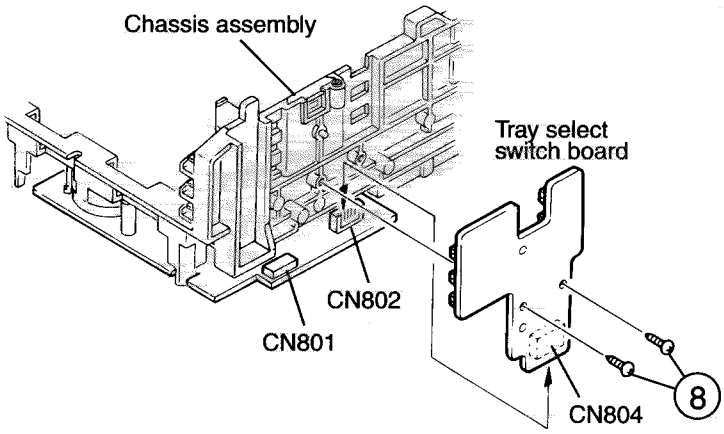

Fig.14

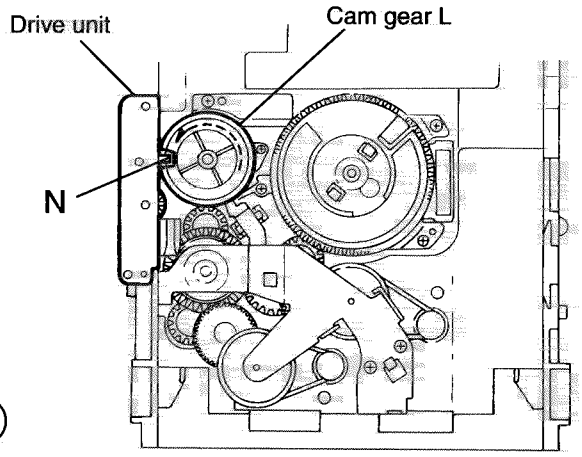

Fig.15

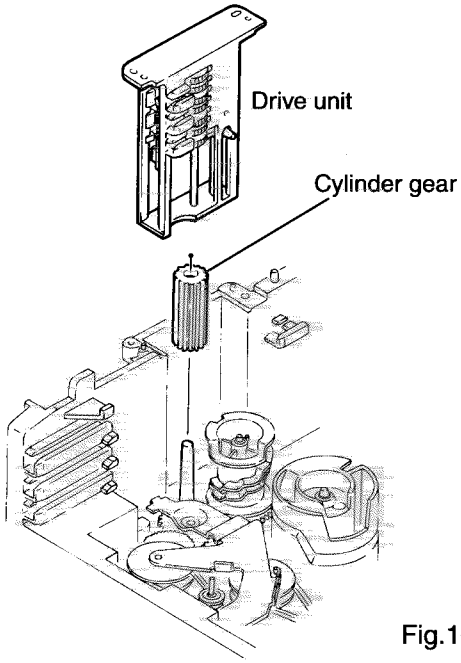

Fig.16

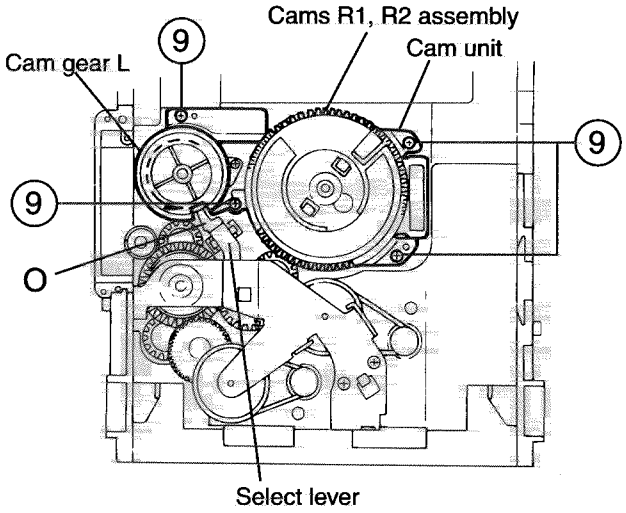

Fig.17

■Removing the actuator motor and belt (See Fig.18~21)

1. Remove the two screws 10 retaining the gear bracket (See Fig.18).
2. While pressing the pawl "P" fixing the gear bracket in the arrow direction, remove the gear bracket (See Fig.18).
3. From the notch "Q section" on the chassis assembly fixing the edge of gear bracket, remove and take out the gear bracket(See Fig. 19).
4. Remove the belts respectively from the right and left actuator motor pulleys and pulley gears(See Fig. 19).
5. After turning over the chassis assembly, remove the actuator motor while spreading the four pawls "R" fixing the right and left actuator motors in the arrow direction(See Fig. 20).

[Note] When the chassis assembly is turned over under the conditions wherein the gear bracket and belt have been removed, then the pulley gear as well as the gear, etc. constituting the gear unit can possibly be separated to pieces. In such a case, assemble these parts by referring to the assembly and configuration diagram in Fig. 21.

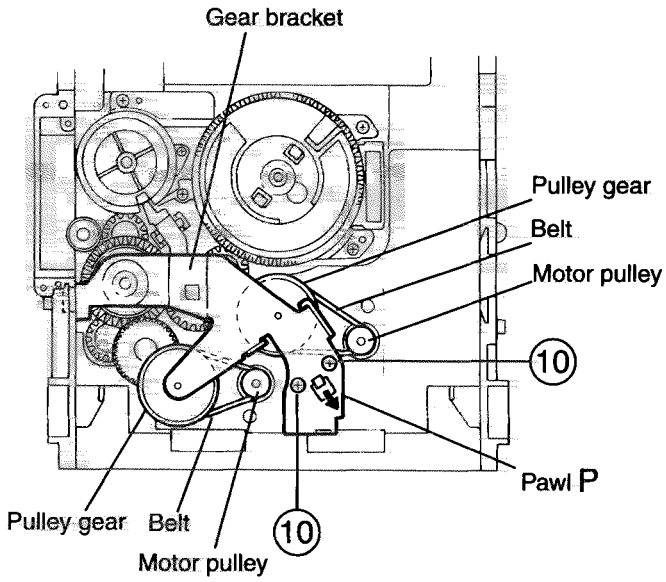

Fig.18

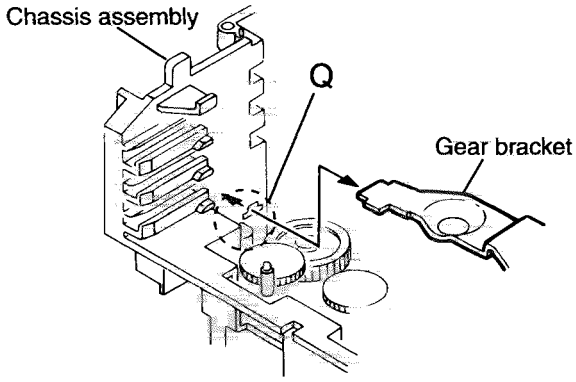

Fig.19

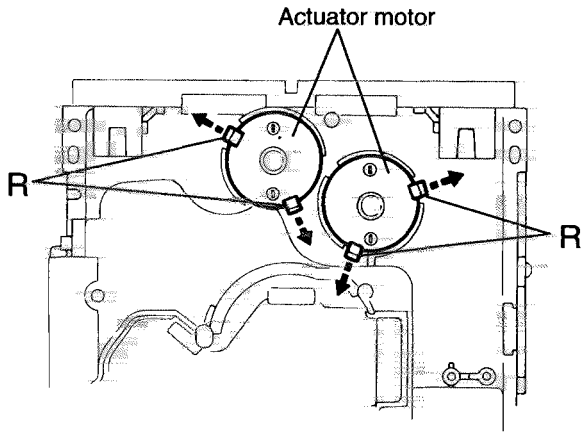

Fig.20

Assembly and Configuration Diagram

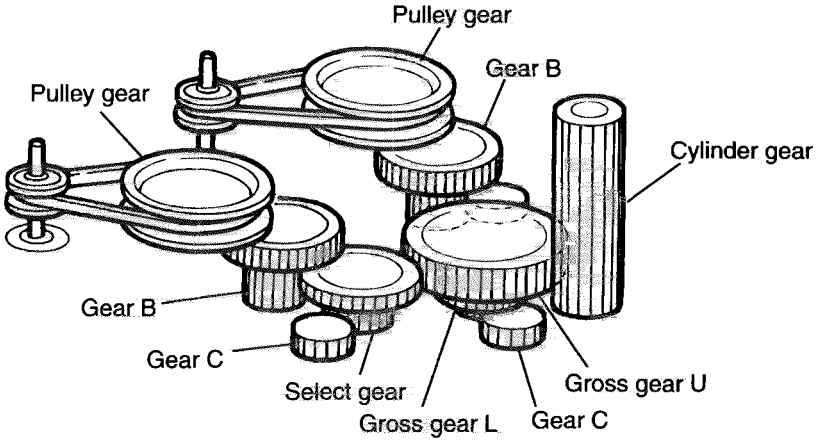

Fig.21

■Removing the cams R1/R2 assembly and cam gear L(See Fig.22)

1. Remove the slit washer fixing the cams R1 and R2 assembly.
2. By removing the two pawls "S" fixing the cam R1, separate R2 from R1.
3. Remove the slit washer fixing the cam gear L.
4. Pull out the cam gear L from the C.G. base assembly.

■Removing the C.G. base assembly (See Fig.22 and 23)

Remove the three screws 11 retaining the C.G. base assembly.

[Caution] To reassemble the cylinder gear, etc.with the cam unit (cam gear and cans R1/R2 assembly), gear unit and drive unit, align the position of the pawl "N" on the drive unit to that o f the notch on the cam gear L. Then, make sure that the gear unit is engaged by turning the cam gear L (See Fig. 23).

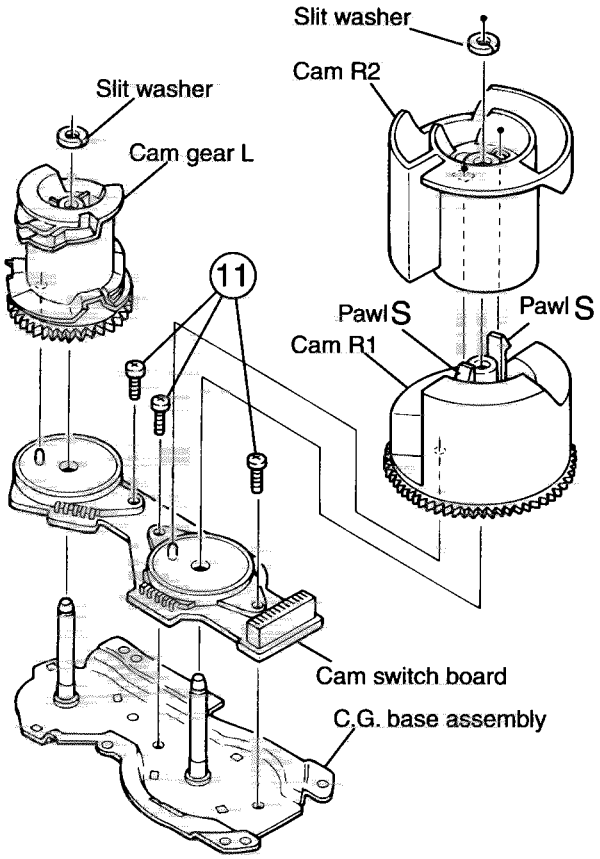

Fig.22

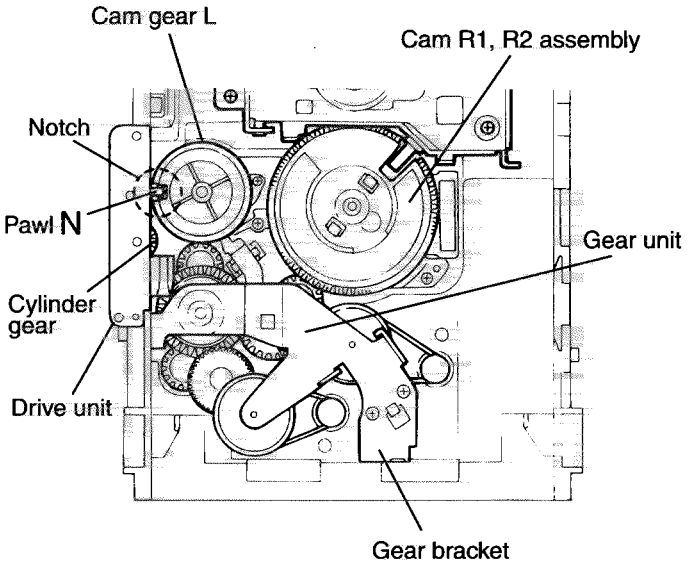

Fig.23

■ How to check for 3CD and CD-R

Check Mode

The Check Mode is prepared for checking timer operation and display with the FL tube.

Check mode setup method

Setup: In the status that the set is turned off, press the POWER key together with the DISPLAY key to turn on the set.

Cancel: Shift the mode to the backup mode, or press the POWER key together with the DISPLAY key to turn on the set again for resetting.

Operation

The set is switched on and all segments of the FL tube go on. Adjust the clock so that its indication gains one minute per one real second.

If the set is operated anyhow other than for check mode canceling, the FL indication reverts to the normal status. After that, the set continues normal operation except the speeded up clock operation.

Clearing all settings

This operation clears all of settings and restore them to the default values, for example, settings of the menu items are restored to the respective default values or registered programs are cleared by this operation. In short, this operation restores every setting to the initial status on shipment.

Setup method

In the status that the set is switched off, press the POWER key together with the LINE key to turn on the set.

Items subject to this clearing/resetting operation

Clearance of clock setting
Clearance of timer setting
Clearance of program for playing back programs
Clearance of registered listening edit and program edit programs
Switching off repeat setting
Clearance of child lock
Setting the current unit for 3 CD's and DNO for the tray 1
Resetting the 3CD play mode to the normal mode
Switching off pitch control setting
Setting the recording source selection to 3CD digital recording
Setting the dubbing speed double
Switching on the AUTO TRK setting
Switching on the TRK space
Switching on the FS CON setting
Switching on the DIG IN SYNC setting

Service Menu

If the set is switched on by pressing the POWER key and DIGITAL key simultaneously, it enters this mode. If the set is switched off, this mode is canceled.

In this mode with both the units set in the STOP status, pressing the MENU key replaces the normal menu with the following menu showing various functions one after another. After this menu appears, select a desirable item and execute it. In this mode the set operates as same as the normal status except this menu display.

After pressing the MENU key, select a desirable item from the menu with the JOG dial or FWD/BWD key on the remote controller.

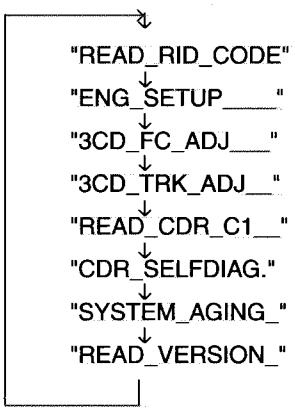

- When a desirable menu item is appearing, press the SET key to access it.
- To escape from this menu mode, complete the selected menu item by execution, or press one of the CANCEL, 3CD STOP, CD-RW STOP and MENU keys.
- Each menu item shown by the FL tube appears as shown on the left.

READ RID CODE

When this menu item is executed, the RID code is read out and it is shown by the FL tube for 5 seconds. This selection is automatically cleared after the 5-second display.
Example of display: JVCCA01089231
Manufacturer code: JVC
Type code: CA01
Unique No.: 089231

ENG SETUP

Explanation of this item is omitted because of the confidential function.

3CD FC ADJ (3CD focus automatic adjustment value readout) (000000F7)

When this menu item is executed, the 3CD unit focus automatic adjustment value (hexadecimal number in six figures) is displayed by the FL tube for 3 seconds. This selection is automatically cleared after the 3-second display. When the set fails in reading out the 3CD unit focus automatic adjustment value, a message "NG" is shown for the value to be read.

3CD TRK ADJ (3CD tracking automatic adjustment value readout) (00000FA)

When this menu item is executed, the 3CD unit tracking automatic adjustment value (hexadecimal number in six figures) is displayed by the FL tube for 3 seconds. This selection is automatically cleared after the 3-second display. When the set fails in reading out the 3CD unit tracking automatic adjustment value, a message "NG" is shown for the value to be read.

READ CDR C1 (CDR C1 error rate readout)

When this menu item is executed, the CDR is set to the play mode with display of the C1 error rate. To escape from this menu item, switch off the set.

CDR SELFDIAG (CDR self-diagnosing)

When this menu item is executed, the set carries out self-diagnosing of the CDR. When nothing wrong is detected by the self-diagnosis, a message "DIAG OK" appears on the display. To quit this self-diagnosing mode, switch off the set.

SYSTEM AGING (Running operation)

When this menu item is executed, the set automatically starts the following running operation. For executing this item, it is required to set a blank CD-RW disk in the CDR beforehand. The time required for a running operation or number of times of pick movement can be controlled by changing the data written on the disc set on the current tray of the 3CD.
(When the running operation starts without disk, "000CD 1ACOPY" is shown on the display.)

↓
One time disk dubbing (COPY)
↓
Play of CDR until readout is complete (PLAY)
↓
Erasure of CDR from disk (ERAS)

If the set receives an effective input from the key, remote controller or DCS, it immediately stops the running operation. If the running operation is suspended by the STOP key or because of an error, the following message is continuously displayed until the set is switched off.

Classification of the unit in which an error breaks out	Error code (hexadecimal number in two figures)	Operation executed last	Number of execution times (4-digits decimal number)
CDorCDR	000CD	COPYorPLAYorERAS	1ACOPY

READ VERSION (Version number readout)

When this menu item is executed, version numbers of the syscon, CDR farm and 3CD farm are shown by the FL tube for 5 seconds. This selection is automatically cleared after the 5-second display.

Syscon version No. (in 3 digits)	CDR farm version No. (in 3 digits)	3CD farm version No. (in 3 digits)

Each version No. is set apart from the other(s) by a space.
A 3-digit number is shown as *.**. The last two digits are shown in the decimal places.
When the set fails in reading out a version number, "000" (three zeros) is shown for the version number to be read.

Description of major ICs

■ UPD784214AGF501-620(IC501):Micon

1.Pin layout

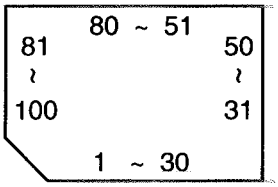

2. Pin function

Pin No.	Symbol	I/O	Description	Pin No.	Symbol	I/O	Description
1~3	NC	-	Non connect	51	AVDD	-	Power supply
4	TEST-	-	Connect to GND upon normal use.	52	AVREF0	-	Power supply
5~8	NC	-	Non connect	53~56	KEY1~KEY4	I	Key matrix signal input
9	VDD	-	Power supply	57	NC	-	Non connect
10,11	CS1,CS2	I	Chip select terminal	58	MIN2	I	External control input (NC)
12,13	JOGA,JOGB	I	Jog signal input	59	MIN3	I	External control input (NC)
14	FLDAT	O	Serial data output	60	MODE	I	Mode select signal input
15	FLCLK	O	Shift clock signal output	61	AVSS	-	Connect to GND
16	FLCS-	O	Chip select signal input	62	DCSI	I	DCS input signal
17	MPLAY	I	External control input (NC)	63	DCSO	O	dcs output signal
18	MREC	I	External control input (NC)	64	AVREF1	-	Power supply
19	NSTOP	I	External control input (NC)	65	NBUSI	I/O	External control databus (NC)
20	HKPDF-	I	External control input (NC)	66	NBUSO	I/O	External control databus (NC)
21	NC	-	Non connect	67	ASCK2	I	GND
22	VPP	-	Power supply	68	STAT	O	Status signal output to IC251
23	DIG_LED-	O	DIGTAL LED control signal output	69	COMD	O	Commnd signal output to IC251
24	CD_LED-	O	CD LED control signal output	70	ASCK1		
25	LIN_LED-	O	LINE IN LED control signal output	71	SRST-	O	Reset signal input
26	MIC_LED-	O	MIC LED control signal output	72	POWER (PON-)	O	Power on/off control signal output
27	MIXBL	I	Mix balance signal input				
28	LLEVE	O	Rec level LED signal output	73	CDR_DTI	I	CDR digital signal input
29	NC	-	Non connect	74	CDR_DTO	O	CDR digital signal output
30	SMUTE-	O	System mute output	75	CDR_ACLK	O	CDR clock signal output
31	NC	-	Non connect	76	CDR_SREQ-	O	CDR Q-code signal output
32	CD_DRT-	O	CD direct sw control signal output	77	SYS_RDY-	I	CDR system input signal
33	SCD-	I	Single CD contorol signal input	78~91	NC	-	Non connect
34	SLIN1-	O	Rec souce1 select signal output	92	CD1_LED1-	O	CD1 LED control signal output
35	SLIN2-	O	Rec souce2 select signal output	93	CD1_LED2-	O	CD1 LED control signal output
36	SMIC-	O	Rec mic signal output	94	CD2_LED1-	O	CD2 LED control signal output
37	VDD	-	Power supply	95	CD2_LED2-	O	CD2 LED control signal output
38,39	X2,X1	I/O	Oscillation terminal (10MHz)	96	CD3_LED1-	O	CD3 LED control signal output
40	VSS	-	Connect to GND	97	CD3_LED2-	O	CD3 LED control signal output
41,42	XT2,XT1	I/O	Sub clock (32MHz)	98	CDRRST-	O	CDR reset signal output
43	RESET-	O	Reset signal output	99	STBY_LED	O	STBY LED control signal output
44	REM	I	Remote control signal input	100	VSS	-	Connect to GND
45	NC	-	Non connect				
46	ACON	I	AC on input				
47	CDR_RREQ-	O	CDR reset signal output				
48	NC	-	Non connect				
49	DOCD	I	CD digital input signal				
50	DOCDR	I	CDR digital input signal				

■ AK4393VF-X (IC361): DAC

1. Pin layout

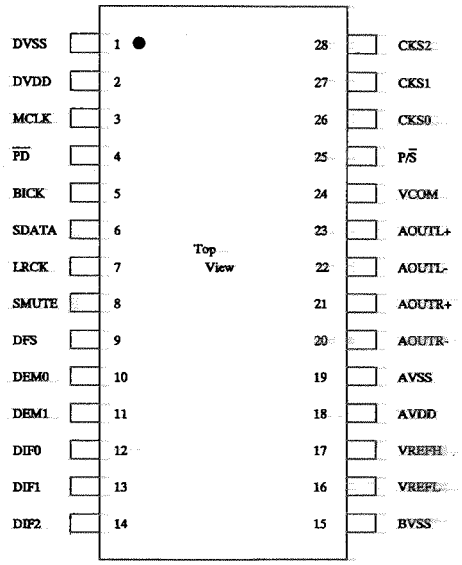

2. Block diagram

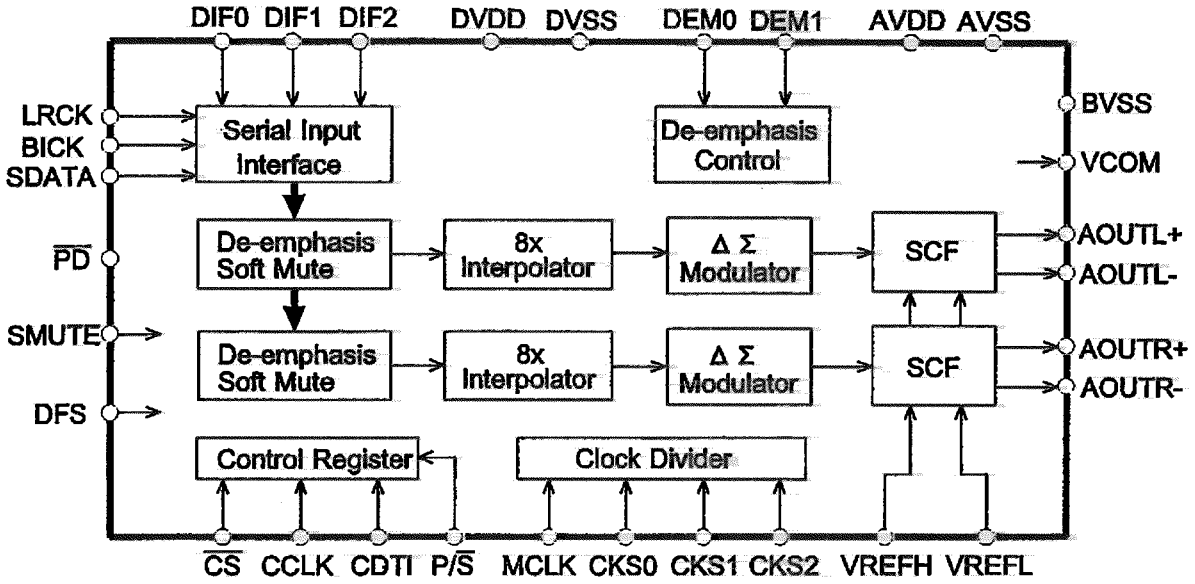

3. Pin function

Pin No.	Simbol	I/O	Function
1	DVSS	-	Digital Ground Pin
2	DVDD	-	Digital Power Supply Pin, 3.3V or 5.0V
3	MCLK	I	Master Clock Input Pin
4	$\overline{PD}$	I	Power-Down Mode Pin When at "L", the AK4393 is in power-down mode and is held in reset. The AK4393 should always be reset upon power-up.
5	BICK	I	Audio Serial Data Clock Pin The clock of 64fs or more than is recommended to be input on this pin.
6	SDATA	I	Audio Serial Data Input Pin 2's complement MSB-first data is input on this pin.
7	LRCK	I	L/R Clock Pin
8	SMUTE	I	Soft Mute Pin When this pin goes "H", soft mute cycle is initiated. When returning "L", the output mute releases.
	$\overline{CS}$	I	Chip Select Pin in serial mode
9	DFS	I	Double speed sampling mode Pin (Internal pull-down pin) "L": Normal Speed, "H": Double Speed
10	DEM0	I	De-emphasis Enable Pin
	CCLK	I	Control Data Clock Pin in serial mode
11	DEM1	I	De-emphasis Enable Pin
	CDTI	I	Control Data Input Pin in serial mode
12	DIF0	I	Digital Input Format Pin
13	DIF1	I	Digital Input Format Pin
14	DIF2	I	Digital Input Format Pin
15	BVSS	-	Substrate Ground Pin, 0V
16	VREFL	I	Low Level Voltage Reference Input Pin
17	VREFH	I	High Level Voltage Reference Input Pin
18	AVDD	-	Analog Power Supply Pin, 5V
19	AVSS	-	Analog Ground Pin, 0V
20	AOUTR-	O	Rch Negative analog output Pin
21	AOUTR+	O	Rch Positive analog output Pin
22	AOUTL-	O	Lch Negative analog output Pin
23	AOUTL+	O	Lch Positive analog output Pin
24	VCOM	O	Common Voltage Output Pin, 2.6V
25	P/$\overline{S}$	I	Parallel/Serial Select Pin (Internal pull-up pin) "L": Serial control mode, "H": Parallel control mode
26	CKS0	I	Master Clock Select Pin
27	CKS1	I	Master Clock Select Pin
28	CKS2	I	Master Clock Select Pin

■ M66004SP(IC721): FL driver

1. Pin layout

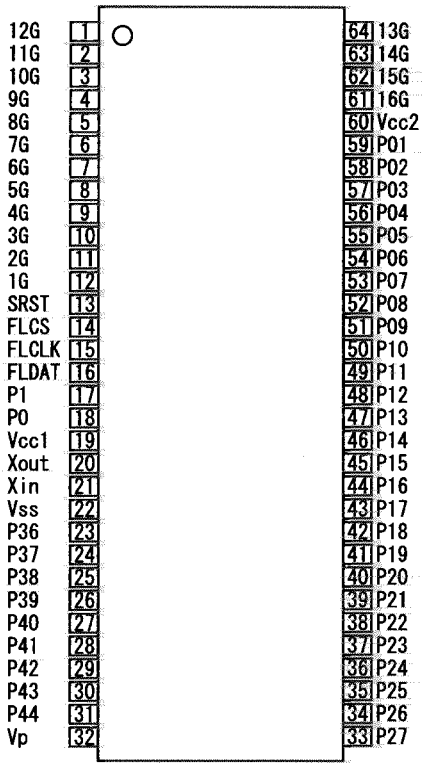

2. Block diagram

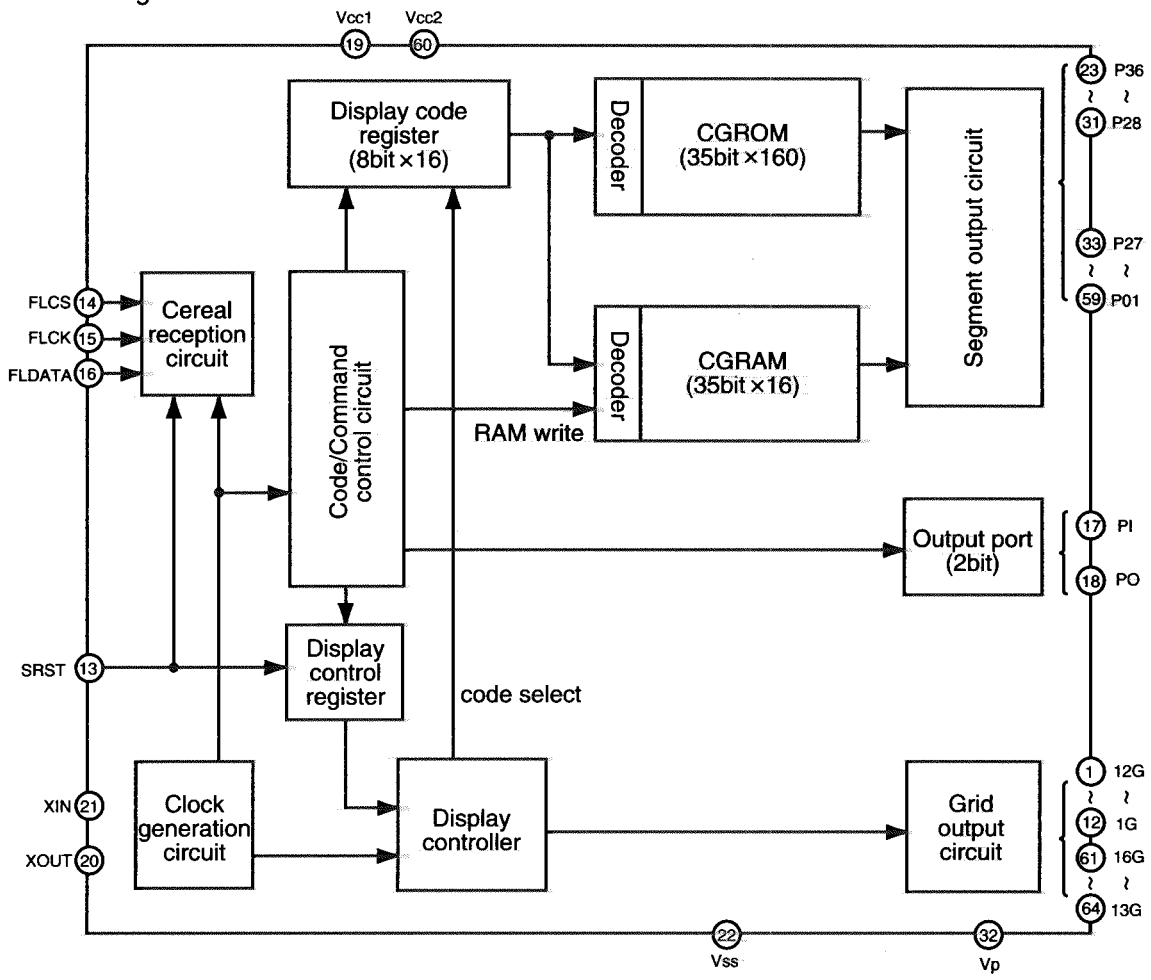

3. Pin function

Pin.No.	Symbol	I/O	Function
1~12	12G~1G	O	FL grid control signal output.
13	SRST	I	FL Driver chip select.
14	FLCS	I	Chip select signal input.
15	FLCK	I	Shift clock signal input.
16	FLDATA	I	Serial data input.
17	PI	O	Indicator control signal output.
18	PO	O	Indicator control signal output.
19	VCC1	-	Power supply for internal logic.
20	XOUT	O	Clock signal output.
21	XIN	I	Clock signal input.
22	VSS	-	Connect to GND.
23~31	P36~P28	O	FL Segment control signal output.
32	VP	-	Power supply.
33~59	P27~PO	O	FL Segment control signal output.
60	VCC2	-	Power supply for grid output and segment output.
61~64	16G~13G	O	FL grid control signal output.

■ MN35510(IC651): Digital servo & digital signal processer

1. Pin layout

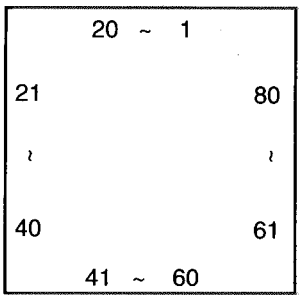

2.Block diagram

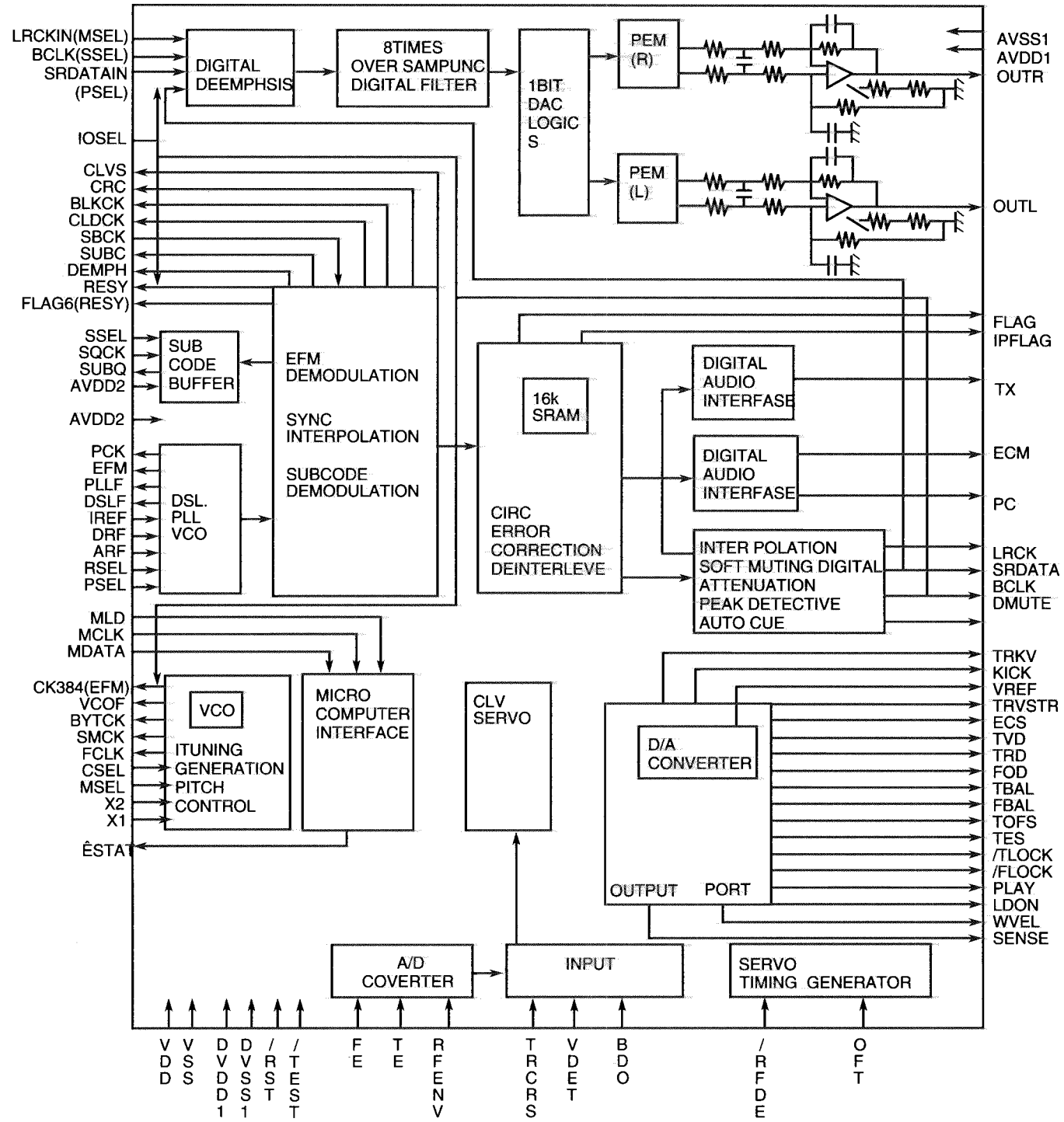

3. Pin function

Pin No.	symbol	I/O	Description	Pin No.	symbol	I/O	Description
1	BCLK	O	Not used	41	TES	O	Tracking error shunt signal output(H:shunt)
2	LRCK	O	Not used	42	PLAY	—	Not used
3	SRDATA	O	Not used	43	WVEL	—	Not used
4	DVDD1	—	Power supply (Digital)	44	ARF	I	RF signal input
5	DVSS1	—	Connected to GND	45	IREF	I	Reference current input pin
6	TX	O	Digital audio interface output	46	DRF	I	Bias pin for DSL
7	MCLK	I	μcom command clock signal input (Data is latched at signal's rising point)	47	DSLF	I/O	Loop filter pin for DSL
8	MDATA	I	μcom command data input	48	PLLF	I/O	Loop filter pin for PLL
9	MLD	I	μcom command load signal input	49	VCOF	—	Not used
10	SENSE	O	Sence signal output	50	AVDD2	—	Power supply(Analog)
11	FLOCK	O	Focus lock signal output Active :Low	51	AVSS2	—	Connected to GND(Analog)
12	TLOCK	O	Tracking lock signal output Active :Low	52	EFM	—	Not used
13	BLKCK	O	sub-code·block·clock signal output	53	PCK	—	Not used
14	SQCK	I	Outside clock for sub-code Q resister input	54	PDO	—	Not used
15	SUBQ	O	Sub-code Q -code output	55	SUBC	—	Not used
16	DMUTE	—	Connected to GND	56	SBCK	—	Not used
17	STATUS	O	Status signal (CRC,CUE,CLVS,TTSTOP,ECLV,SQOK)	57	VSS	—	Connected to GND(for X'tal oscillation circuit)
18	RST	I	Reset signal input (L:Reset)	58	XI	I	Input of 16.9344MHz X'tal oscillation circuit
19	SMCK	—	Not used	59	X2	O	Output of X'tal oscillation circuit
20	PMCK	—	Not used	60	VDD	—	Power supply(for X'tal cscillation circuit)
21	TRV	O	Traverse enforced output	61	BYTCK	—	Not used
22	TVD	O	Traverse drive output	62	CLDCK	—	Not used
23	PC	—	Not used	63	FLAG	—	Not used
24	ECM	O	Spindle motor drive signal (Enforced mode output) 3-State	64	IPPLAG	—	Not used
25	ECS	O	Spindle motor drive signal (Servo error signal output)	65	FLAG	—	Not used
26	KICK	O	Kick pulse output	66	CLVS	—	Not used
27	TRD	O	Tracking drive output	67	CRC	—	Not used
28	FOD	O	Focus drive output	68	DEMPH		Not used
29	VREF	I	Reference voltage input pin for D/A output block (TVD,FOD,FBA,TBAL)	69	RESY	—	Not used
30	FBAL	O	Focus Balance adjust signal output	70	IOSEL	—	pull up
31	TBAL	O	Tracking Balance adjust signal output	71	TEST	—	pull up
32	FE	I	Focus error signal input(Analog input)	72	AVDD1	—	Power supply(Digital)
33	TE	I	Tracking error signal input(Analog input)	73	OUT L	O	Lch audio output
34	RF ENV	I	RF envelope signal input(Analog input)	74	AVSS1	—	Connected to GND
35	VDET	I	Vibration detect signal input(H:detect)	75	OUT R	O	Rch audio output
36	OFT	I	Off track signal input(H:off track)	76	RSEL	—	pull up
37	TRCRS	I	Track cross signal input	77	CSEL	—	Connected to GND
38	RFDET	I	RF detect signal input(L:detect)	78	PSEL	—	Connected to GND
39	BDO	I	BDO input pin(L:detect)	79	MSEL	—	Connected to GND
40	LDON	O	Laser ON signal output(H:on)	80	SSEL	—	Pull up

■ BA6897FP(IC801):4channel driver

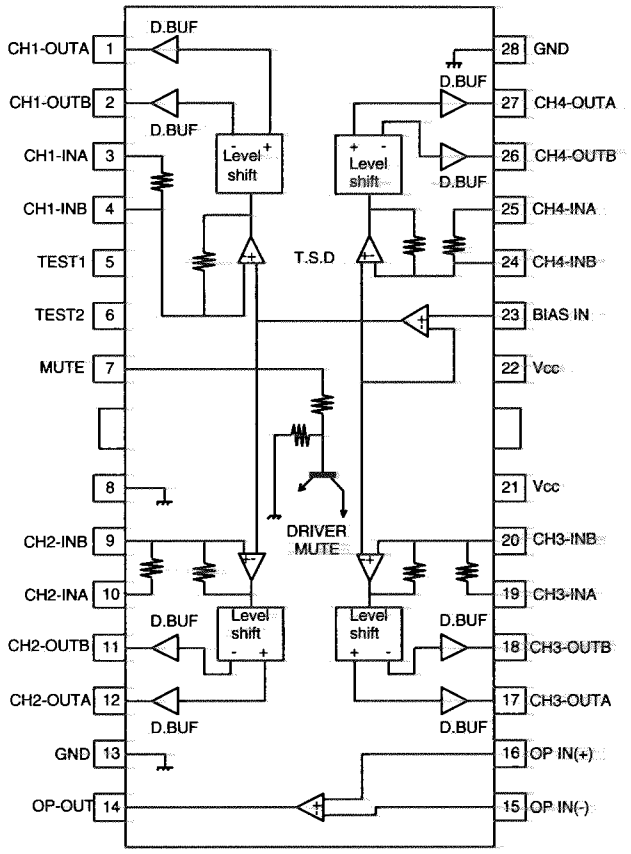

■ BU4066BC (IC821,IC831,IC841) : Line out sel, Rec souce SEL1, SEL2

1.Pin layout

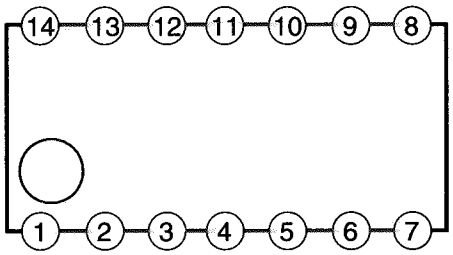

2.Block diagram

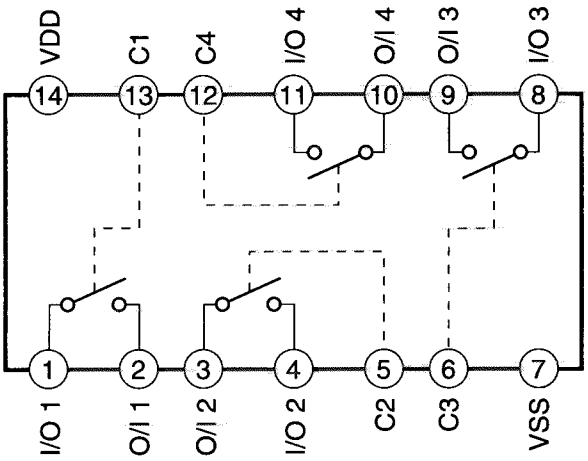

■ TA8409S (IC851.IC852.IC853) : Motor Driver

1.Block diagram

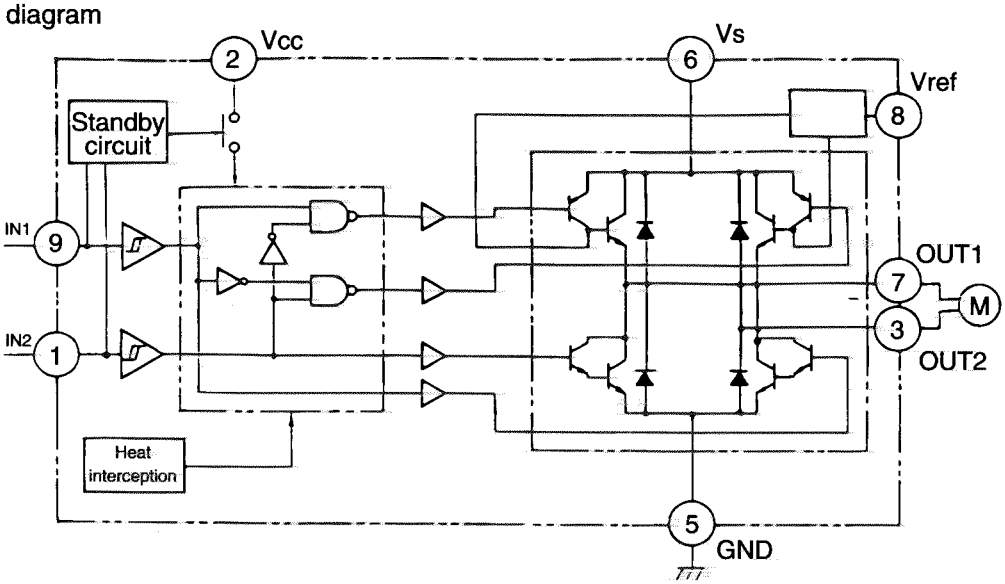

2.Pin function

INPUT		OUTPUT		MODE
IN1	IN2	OUT1	OUT2	MOTOR
0	0	∞	∞	STOP
1	0	H	L	CW/CCW
0	1	L	H	CCW/CW
1	1	L	L	BRAKE

■ TC74HC00AP (IC501) : Digital out sel

1 . Block diagram

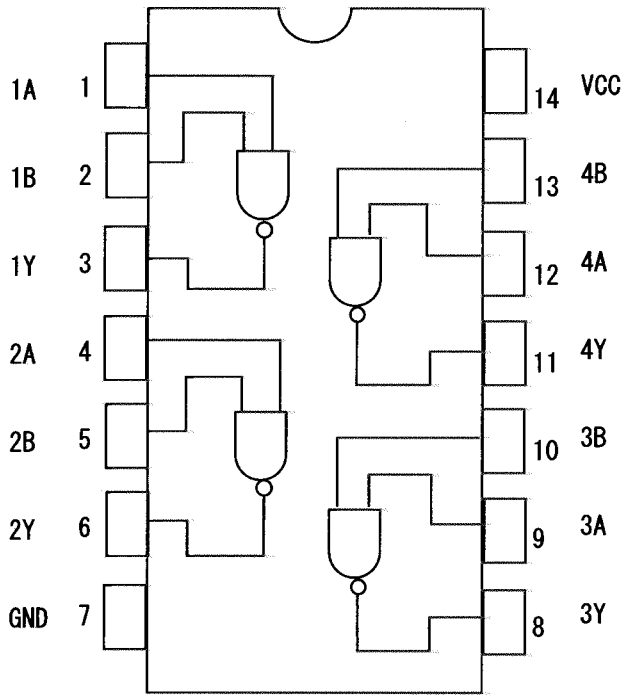

2. Function

A	B	Y
L	L	H
L	H	H
H	L	H
H	H	C

Internal connections for FL display tube

■ QLF0075-001 (IC721) : Display

1. Grid assignment

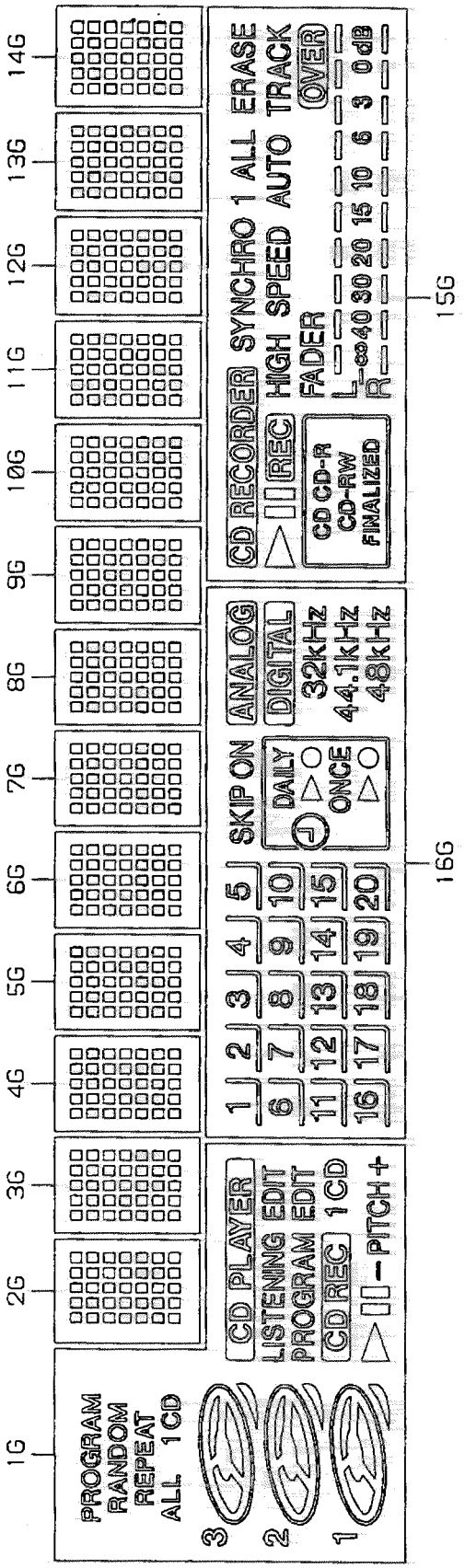

2. Pin connection

PIN NO.	1	2	3	4	5	6	7	8	9	10	11	12	13	14	15	16	17	18	19	20	21	22	23	24	25	26	27	28	29	30	31	32	33	34	35	36	37	38	39	40	41	42	43	44	45	46	47	48	49	50
CONNECTION	P	P	P	G	G	G	N	N	N	1	2	3	4	N	N	N	N	N	N	N	N	N	N	N	N	N	N	N	N	N	N	N	N	N	N	N	N	N	N	N	N	N	N	N	N	N	N	N	N	N	N	N

PIN NO.	51	52	53	54	55	56	57	58	59	60	61	62	63	64	65	66	67	68	69	70	71	72	73	74	75	76	77	78	79	80	81	82	83	84	85	86	87	88	89	90	91	92	93	94	95	96	97	98	99	100
CONNECTION	F	F	F	N	N	N	1	2	3	4	5	6	7	8	9	10	11	12	13	14	15	16	17	18	19	20	P	P	P	P	P	P	P	P	P	P	P	P	P	P	P	P	P	P	P	P	P	P	P	P	P	P

3. Anode connection

	1G	2G~14G	15G	16G
P1	S5	1-1	B10	1
P2	S4	2-1	B11	2
P3	S3	3-1	B12	3
P4	S2	4-1	B13	4
P5	S1	5-1	B14	5
P6	1 (ディスク)	1-2	B15	6
P7	S10	2-2	B16	7
P8	S9	3-2	B17	8
P9	S8	4-2	B18	9
P10	S7	5-2	B1	10
P11	S6	1-3	B2	11
P12	2	2-3	B3	12
P13	S15	3-3	B4	13
P14	S14	4-3	B5	14
P15	S13	5-3	B6	15
P16	S12	1-4	B7	16
P17	S11	2-4	B8	17
P18	3	3-4	B9	18
P19	PROGRAM	4-4	S17	19
P20	RANDOM	5-4	FINALIZED	20
P21	REPEAT	1-5	CD-RW	S16
P22	ALL	2-5	CD-R	–
P23	CD (ALL)	3-5	CD	48kHz
P24	1 (ALL)	4-5	OVER	44.1kHz
P25	+	5-5	FADER	32kHz
P26	PITCH	1-6	▷	DIGITAL
P27	▭	2-6	▯▯	ANALOG
P28	1 (CD REC)	3-6	REC	▷ (ONCE)
P29	CD (CD REC)	4-6	HIGH SPEED	○ (ONCE)
P30	▯▯	5-6	AUTO TRACK	ONCE
P31	▷	1-7	CD RECORDER	▷ (DAILY)
P32	CD REC	2-7	SYNCHRO	○ (DAILY)
P33	PROGRAM EDIT	3-7	1	DAILY
P34	LISTENING EDIT	4-7	ALL	S18
P35	CD PLAYER	5-7	ERASE	SKIP ON

Block diagram

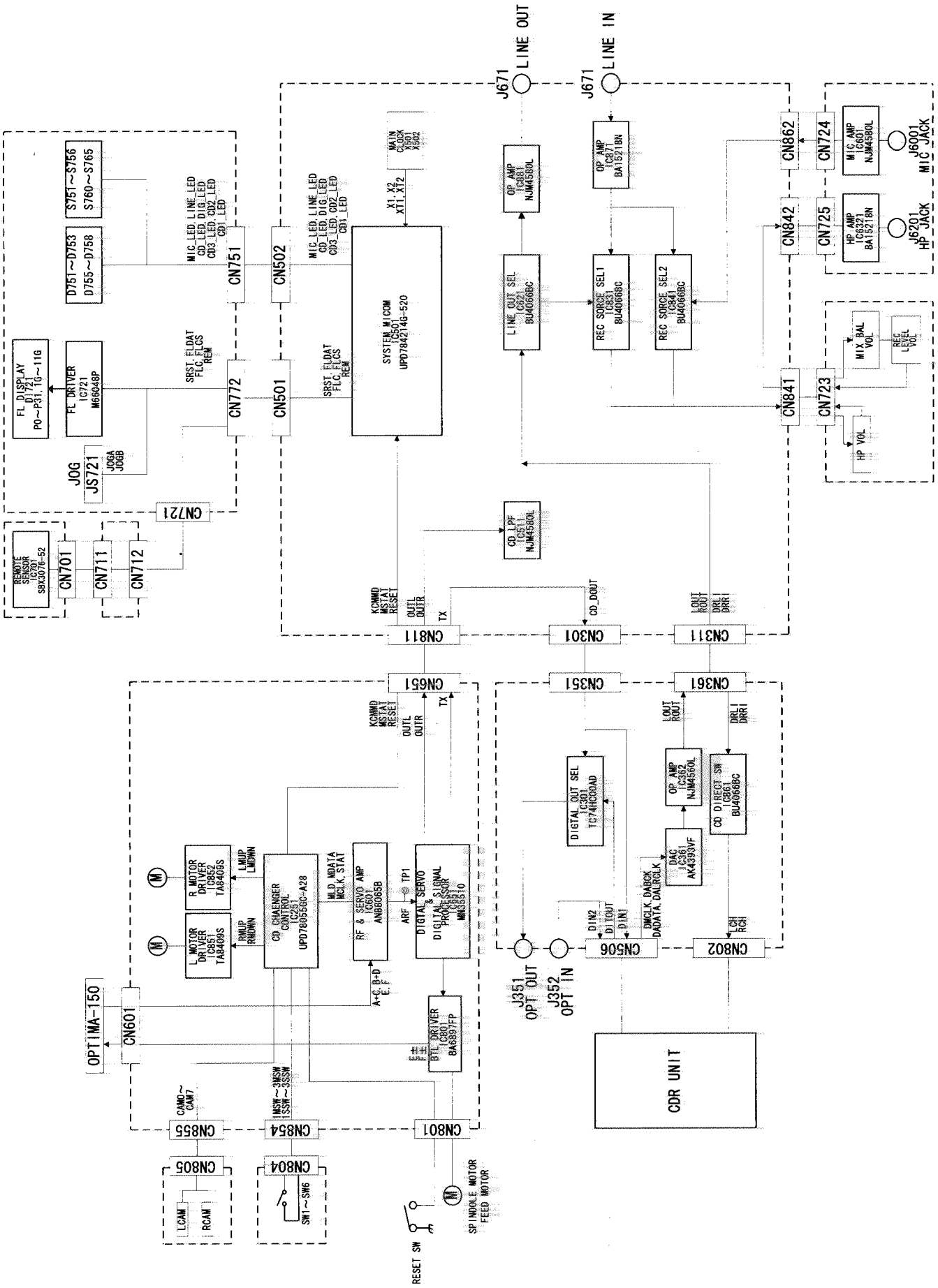

Standard schematic diagrams

■ System contorol circuit

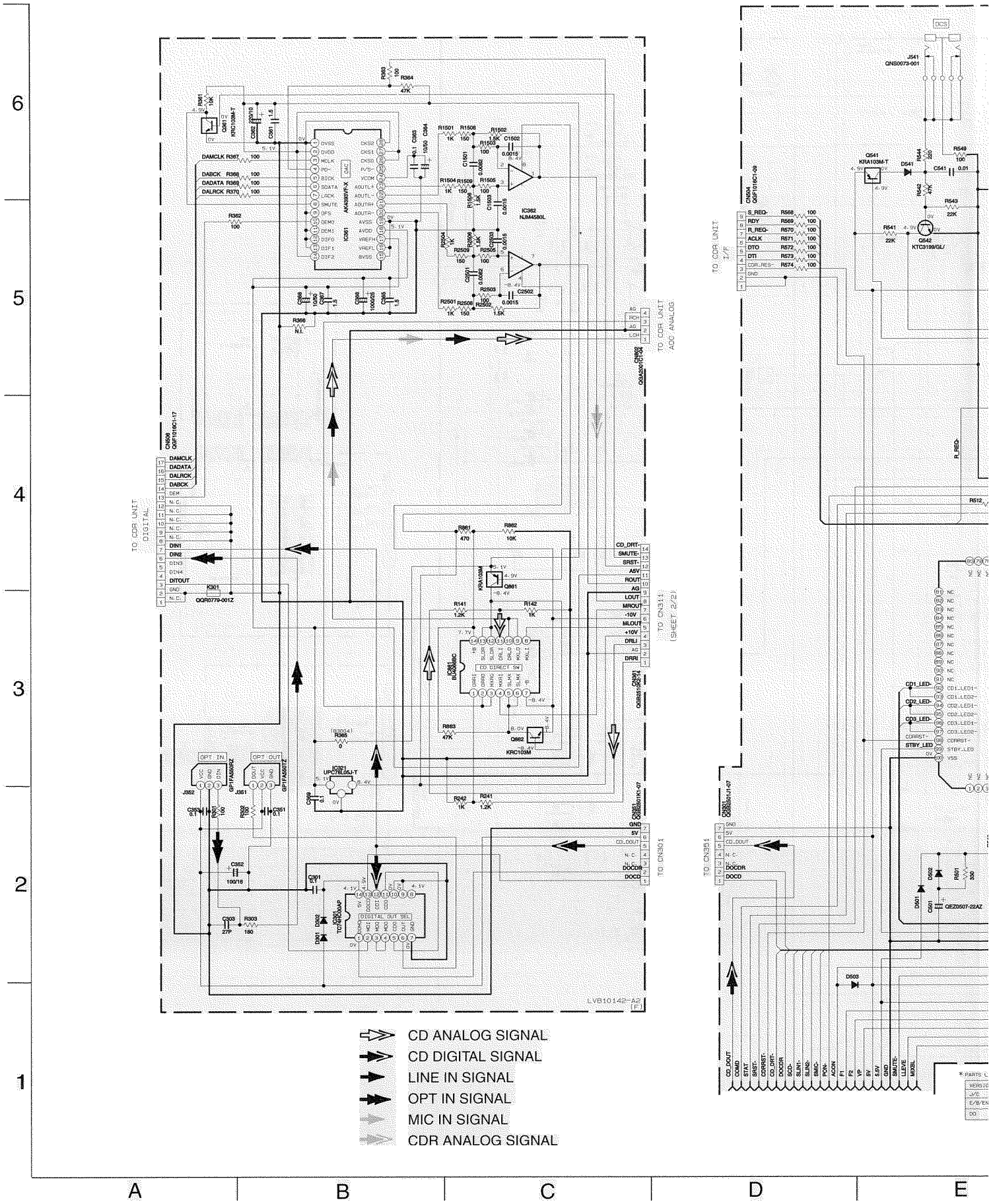

CD ANALOG SIGNAL
CD DIGITAL SIGNAL
LINE IN SIGNAL
OPT IN SIGNAL
MIC IN SIGNAL
CDR ANALOG SIGNAL

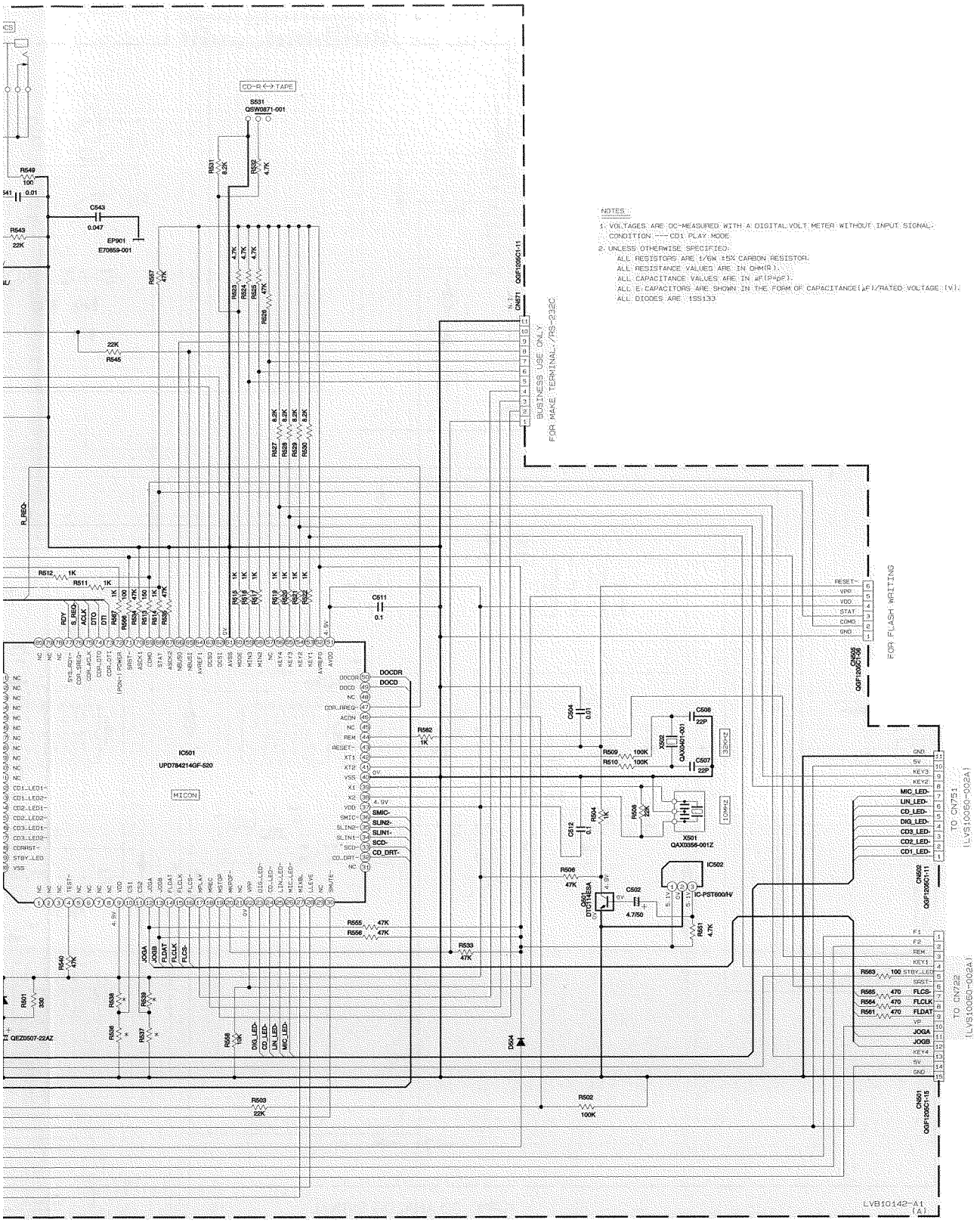

NOTES :

1. VOLTAGES ARE DC-MEASURED WITH A DIGITAL VOLT METER WITHOUT INPUT SIGNAL.
   CONDITION ---- CD1 PLAY MODE
2. UNLESS OTHERWISE SPECIFIED:
   ALL RESISTORS ARE 1/6W ±5% CARBON RESISTOR.
   ALL RESISTANCE VALUES ARE IN OHM(Ω).
   ALL CAPACITANCE VALUES ARE IN μF(P=pF).
   ALL E-CAPACITORS ARE SHOWN IN THE FORM OF CAPACITANCE(μF)/RATED VOLTAGE (V).
   ALL DIODES ARE 1SS133.

* PARTS LIST

VERSION	R536	R537	R538	R539
J/C	47K	N.I.	N.I.	47K
E/B/EN/U	47K	47K	N.I.	N.I.
DD	N.I.	47K	47K	N.I.

* IC501

VERSION	J	C	E/B/EN/U/DD
717 UPD78F4216AGF505	301- MP4-	301- MP1-	———
717 UPD784214AGF505	6301- MP4S001-	801- MP1S01-	301- MP1-

■ Regulator circuit

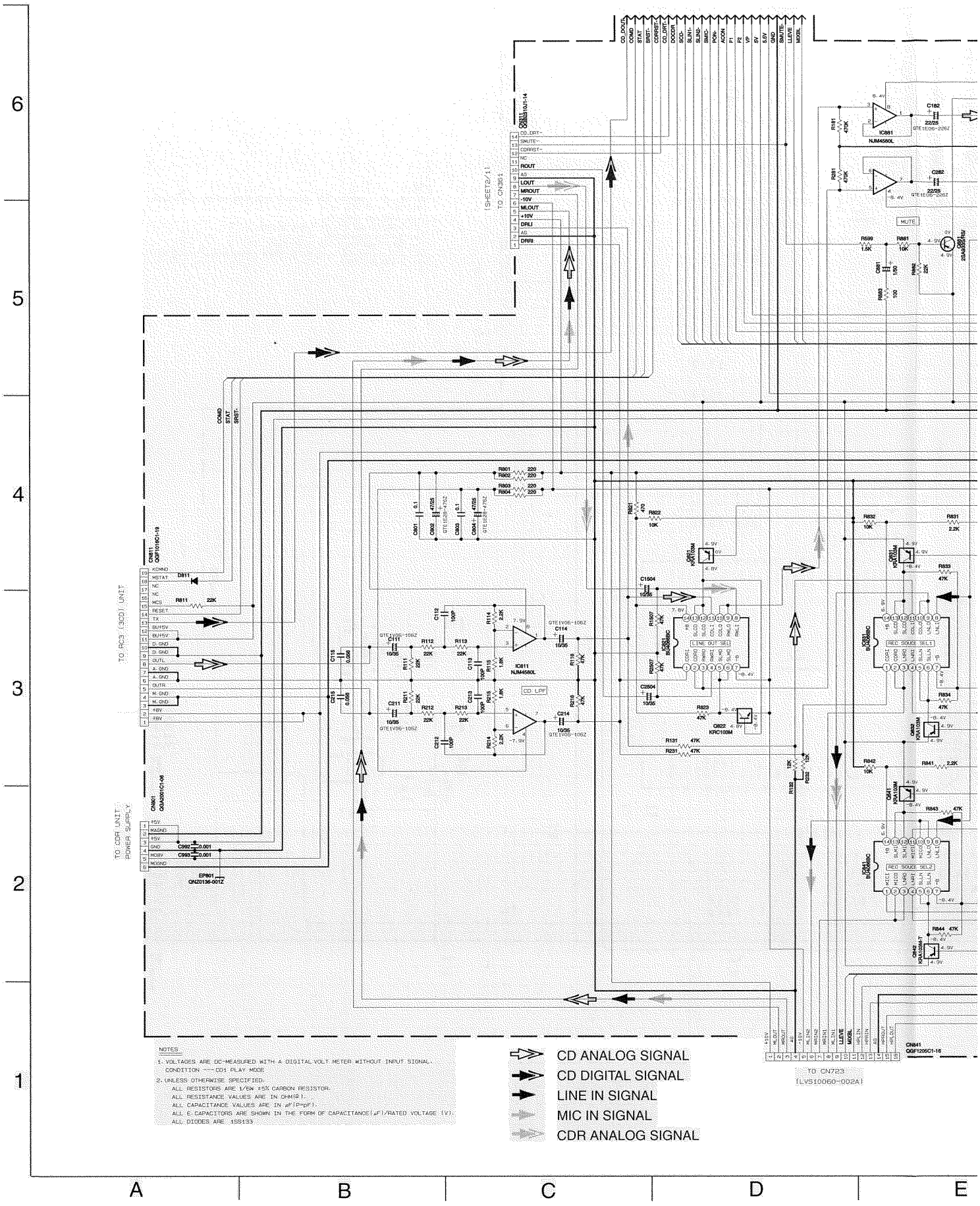

XL-R5000BK

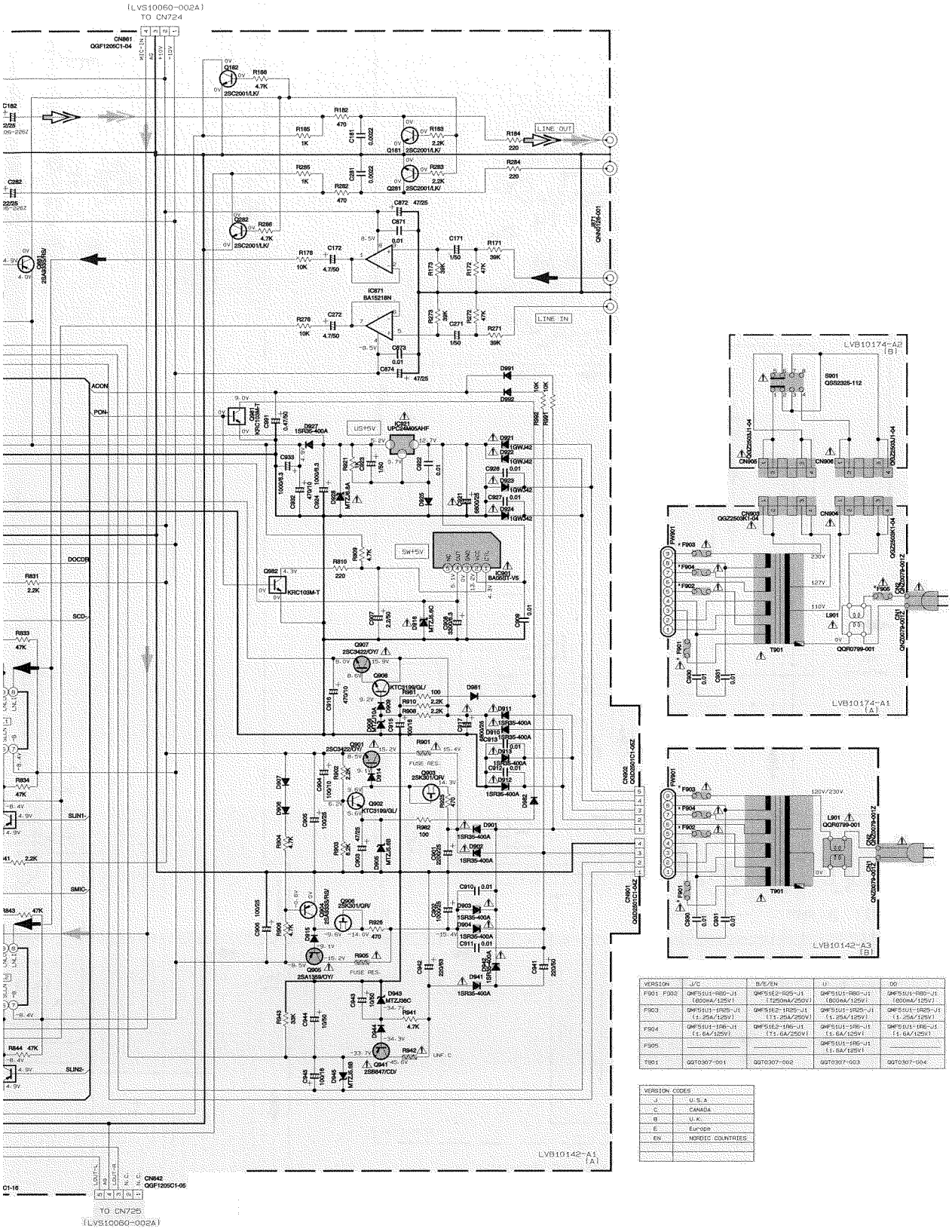

VERSION	J/C	B/E/EN	U	DD
F901 F902	QMF51U1-R80-J1 (800mA/125V)	QMF51E2-R25-J1 (T250mA/250V)	QMF51U1-R80-J1 (800mA/125V)	QMF51U1-R80-J1 (800mA/125V)
F903	QMF51U1-1R25-J1 (1.25A/125V)	QMF51E2-1R25-J1 (T1.25A/250V)	QMF51U1-1R25-J1 (1.25A/125V)	QMF51U1-1R25-J1 (1.25A/125V)
F904	QMF51U1-1R6-J1 (1.6A/125V)	QMF51E2-1R6-J1 (T1.6A/250V)	QMF51U1-1R6-J1 (1.6A/125V)	QMF51U1-1R6-J1 (1.6A/125V)
F905	—	—	QMF51U1-1R6-J1 (1.6A/125V)	—
T901	QQT0307-001	QQT0307-002	QQT0307-003	QQT0307-004

VERSION CODES	
J	U.S.A
C	CANADA
B	U.K.
E	Europe
EN	NORDIC COUNTRIES

⚠ Parts are safety assurance parts. When replacing those parts make sure to use the specified one.

E | F | G | H | I

Display circuit

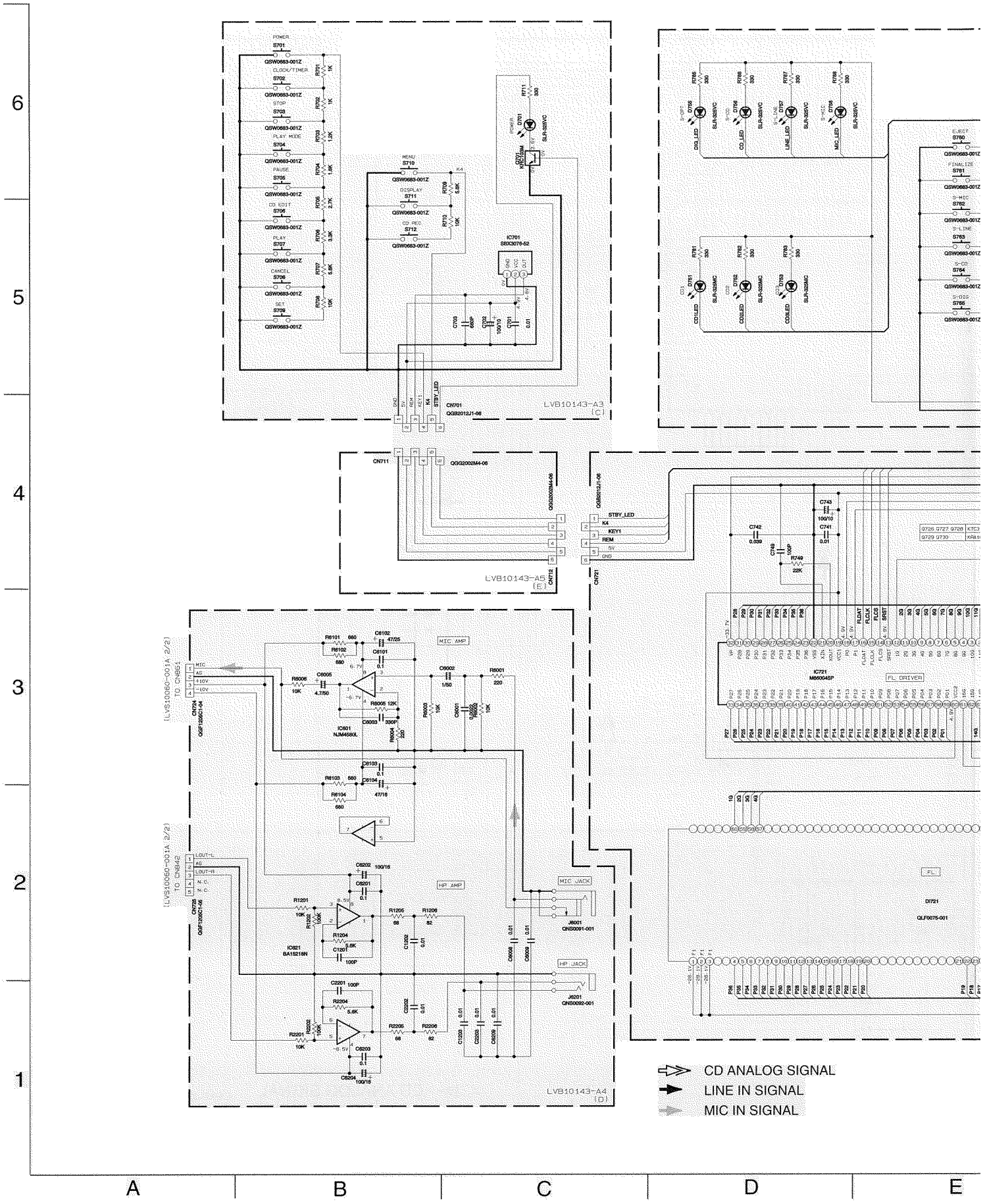

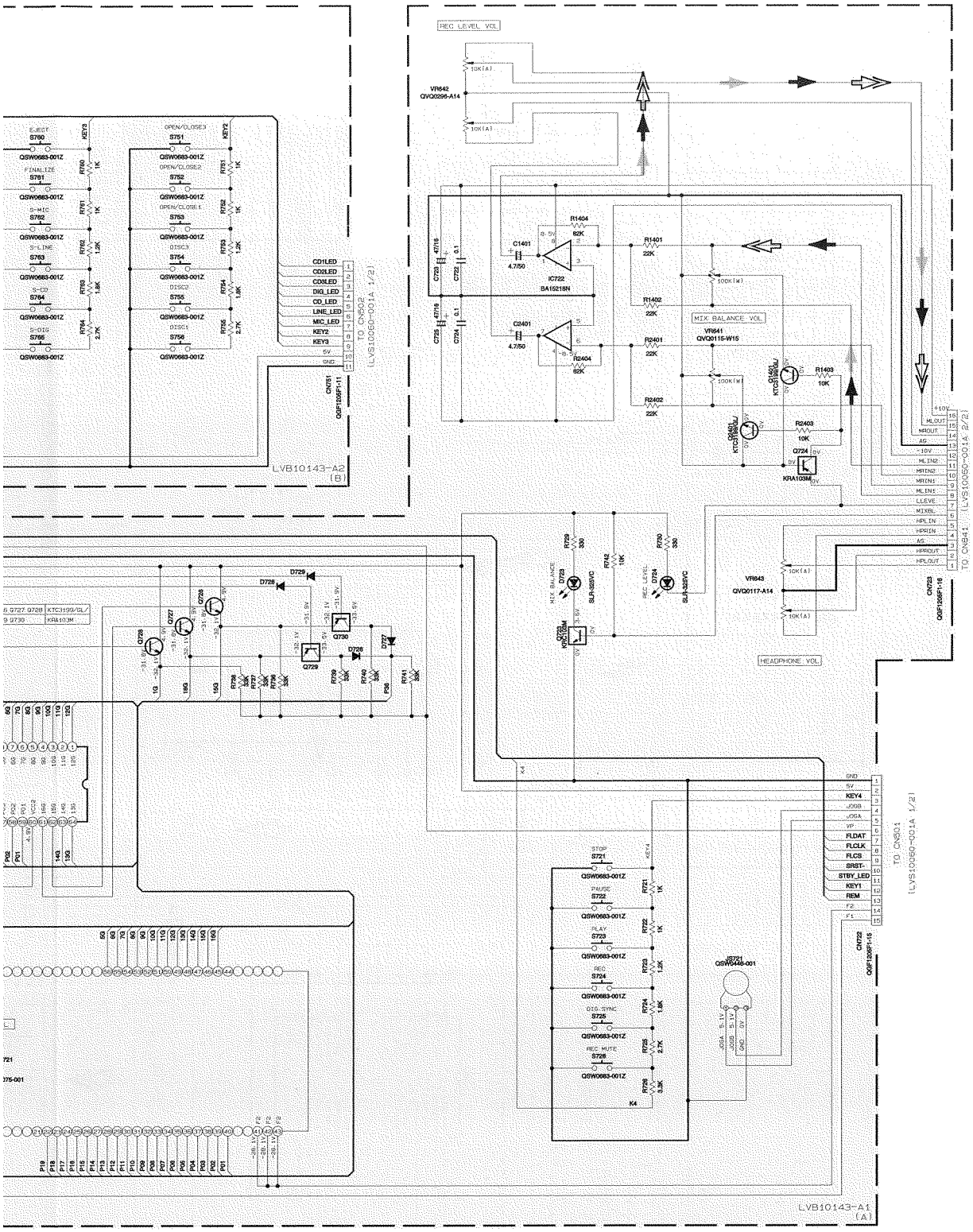

NOTES:

1. VOLTAGES ARE DC-MEASURED WITH A DIGITAL VOLT METER WITHOUT INPUT SIGNAL.
   CONDITION ---CD1 PLAY MODE
2. UNLESS OTHERWISE SPECIFIED:
   ALL RESISTORS ARE 1/6W ±5% CARBON RESISTOR.
   ALL RESISTANCE VALUES ARE IN OHM(Ω).
   ALL CAPACITANCE VALUES ARE IN μF(P=pF).
   ALL E-CAPACITORS ARE SHOWN IN THE FORM OF CAPACITANCE(μF)/RATED VOLTAGE (V).
   ALL DIODES ARE 1SS133

E | F | G | H | I

■ CD servo & CD mechanism control circuit

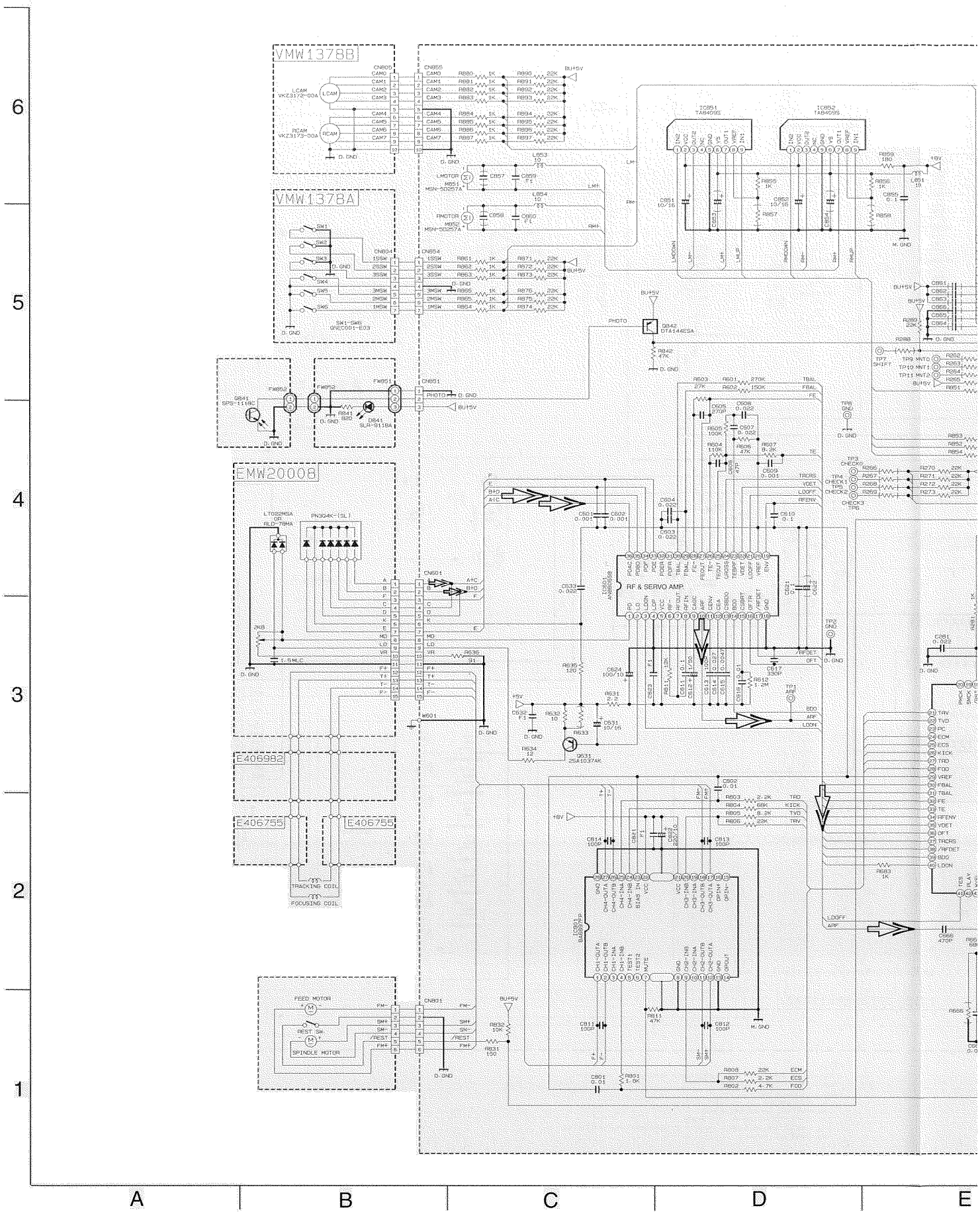

XL-R5000BK

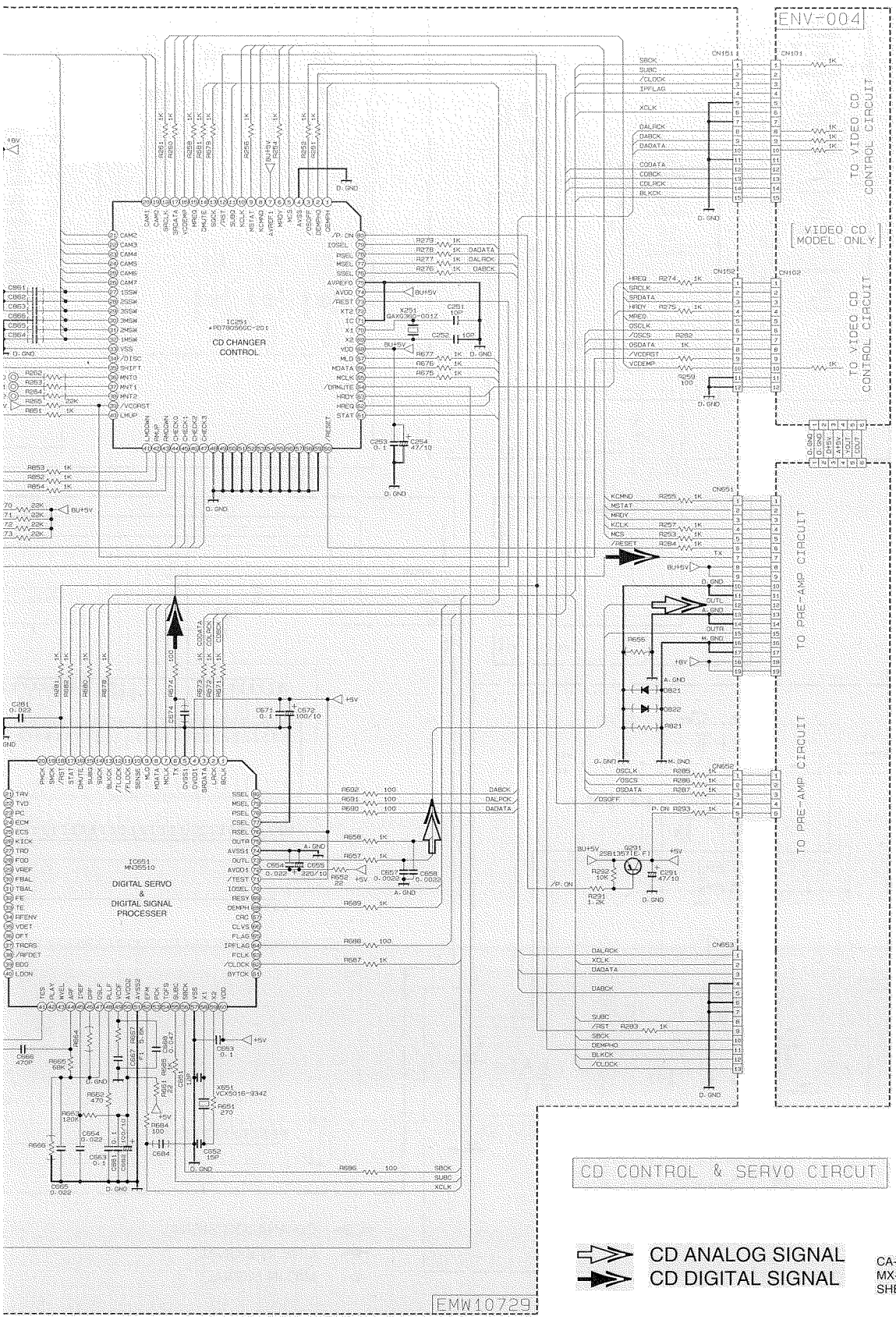

CD ANALOG SIGNAL
CD DIGITAL SIGNAL

CA-MXJ500 / MX-J500
MX-J506/
SHEET 8/8

E	F	G	H	I

Printed circuit boards

Main board

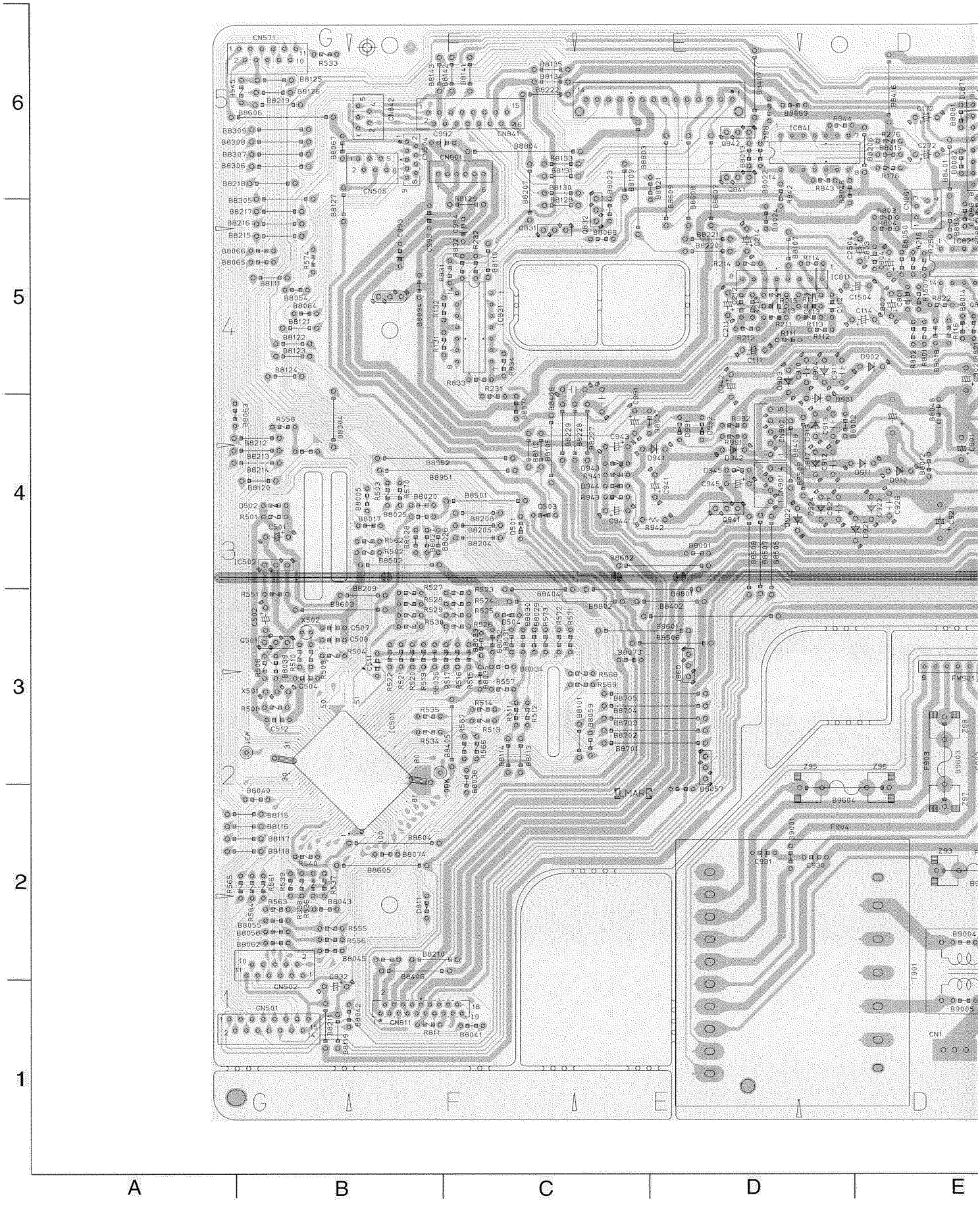

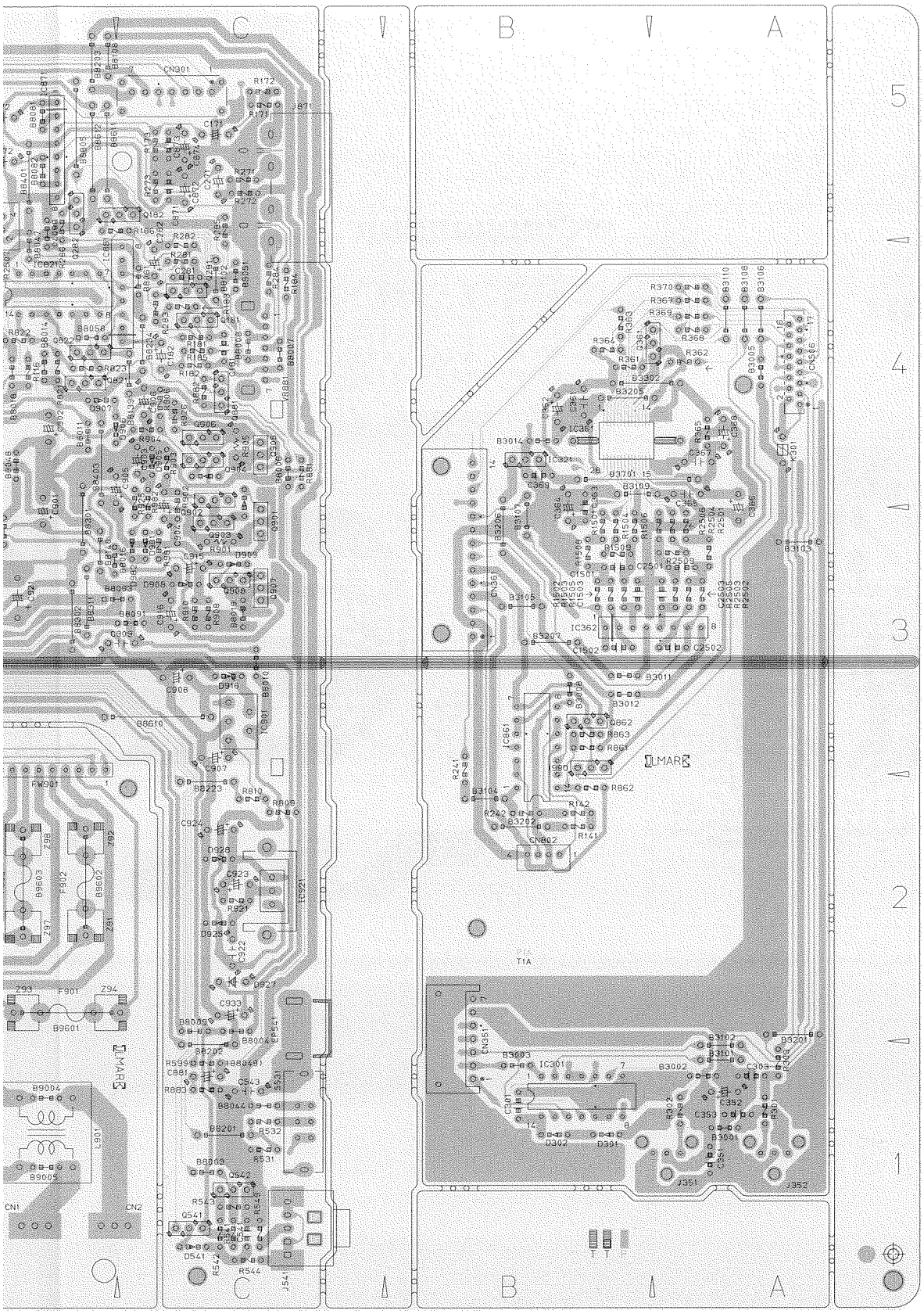
C
B
A
5
4
3
2
1
E
F
G
H
I

■ Display board

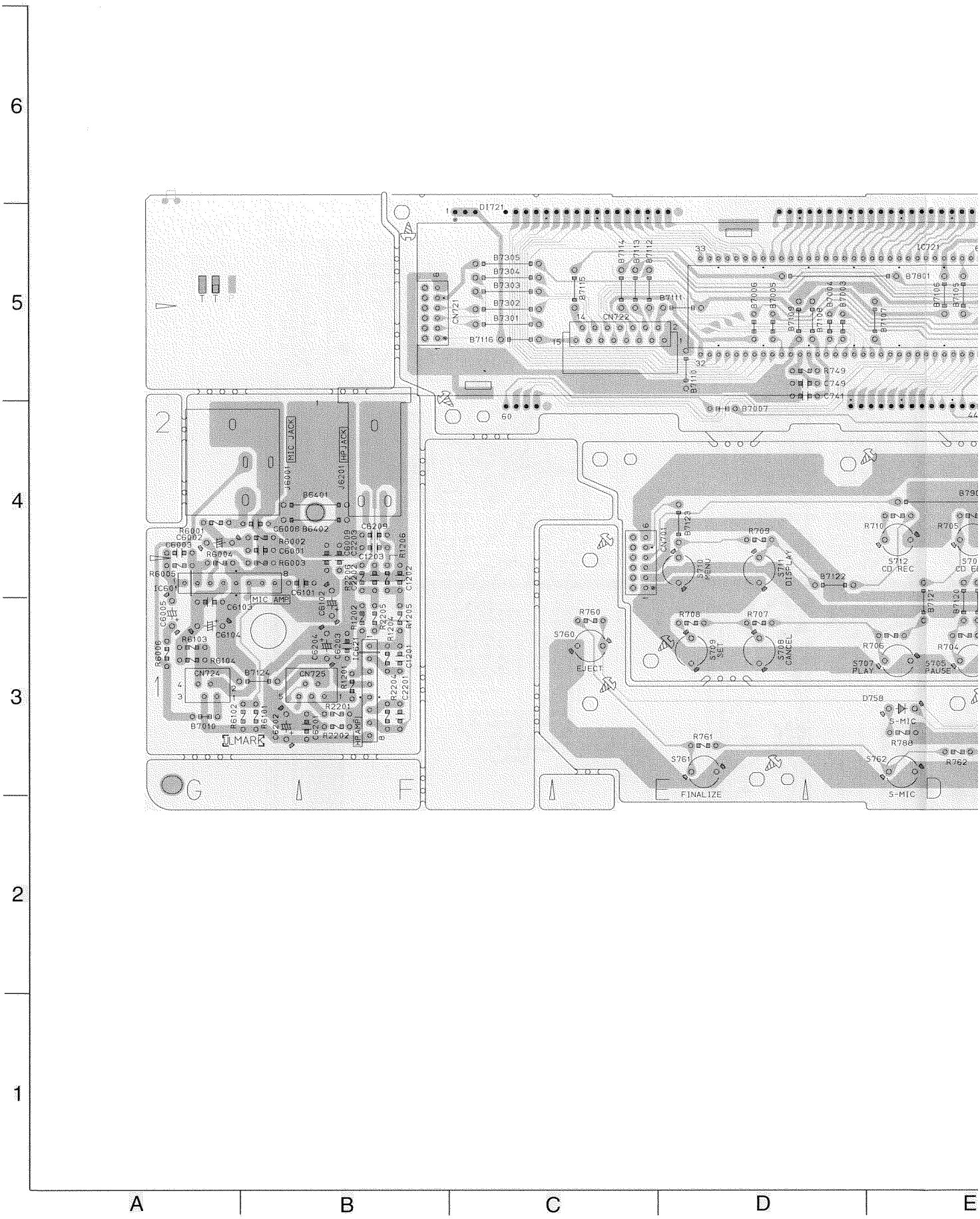

XL-R5000BK

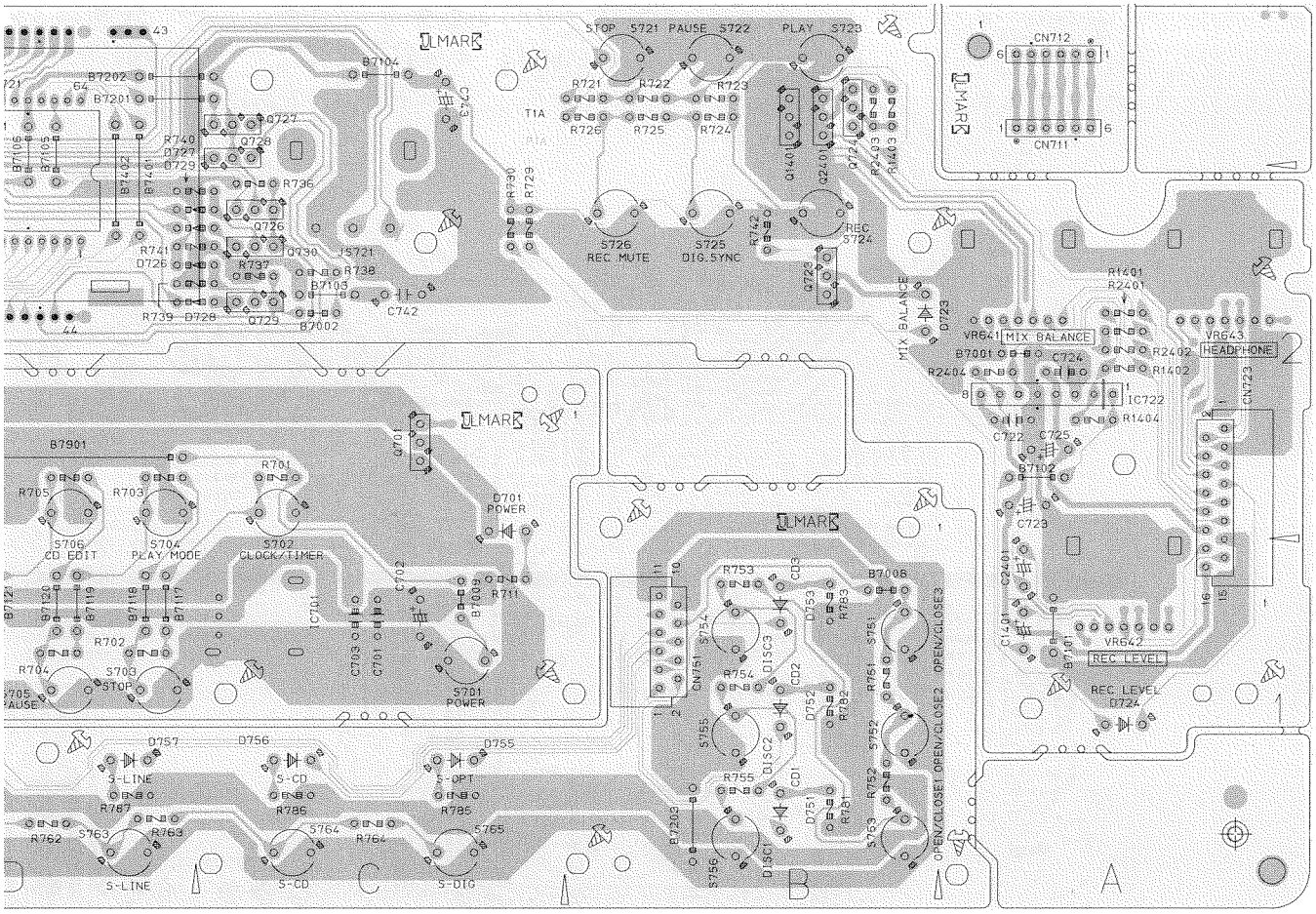

E	F	G	H	I

■CD servo control board

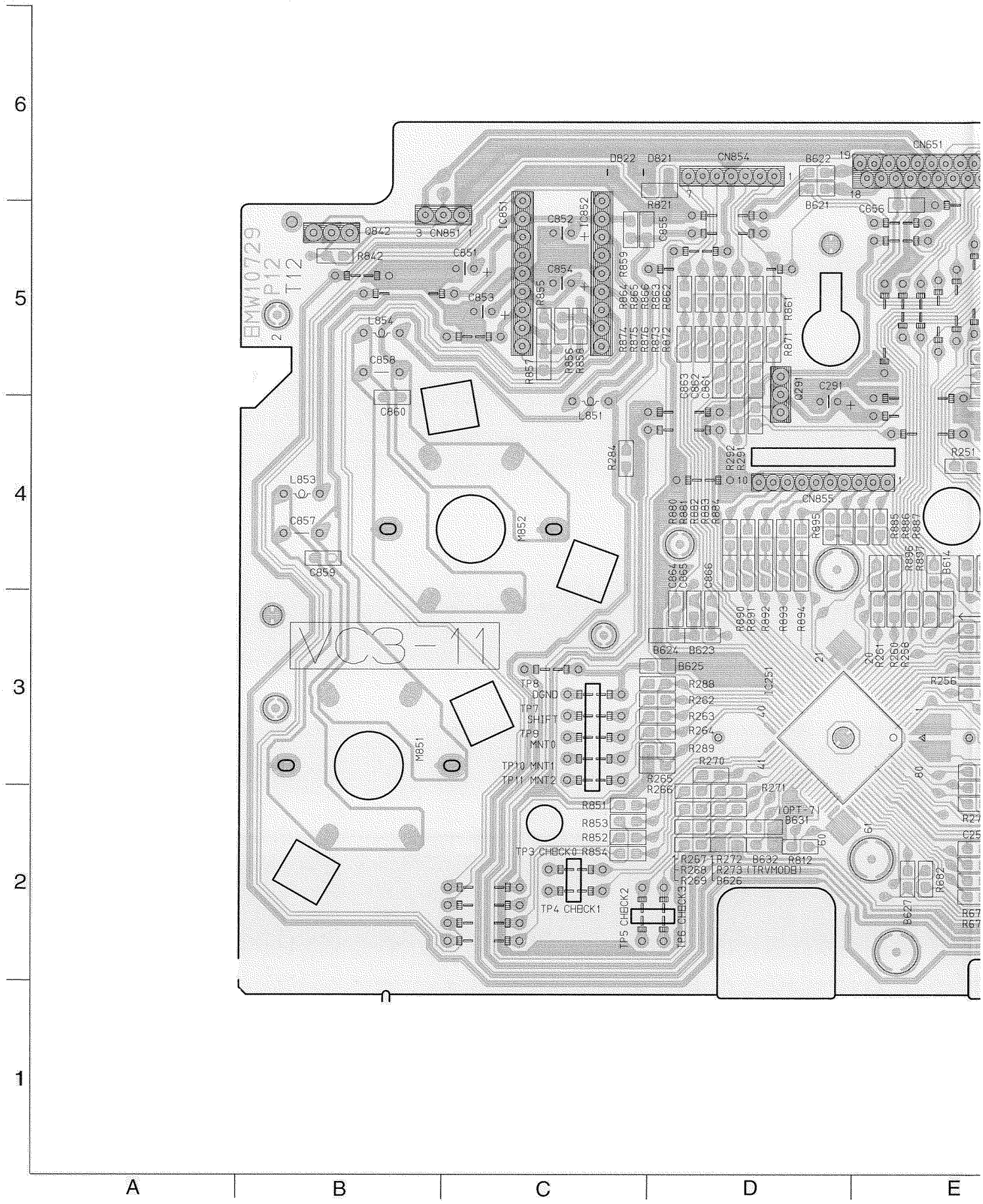

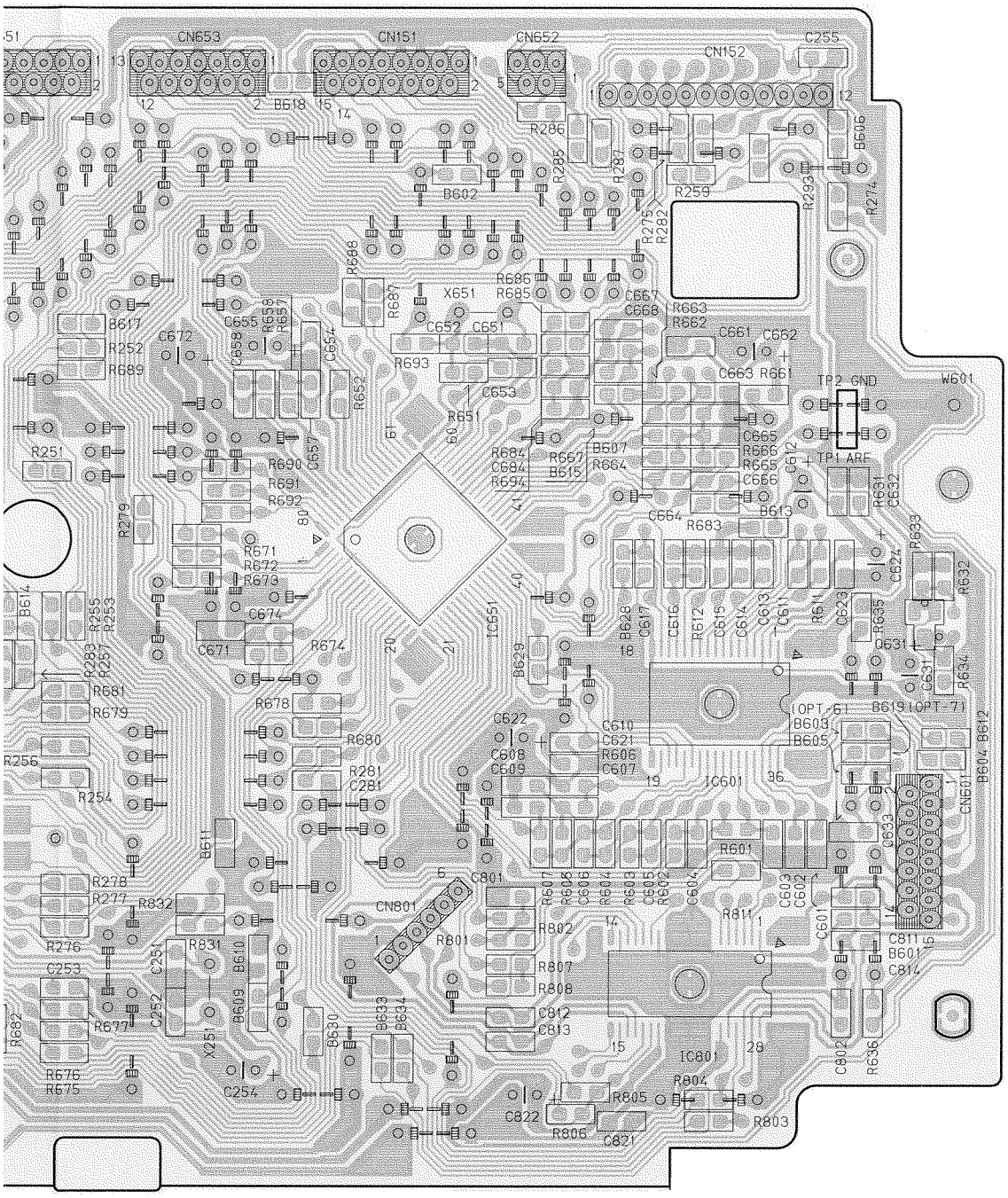
CN653
CN151
CN652
C255
CN152
B618
B606
R286
R285
R287
R259
R293
R274
B602
R275
R282
R688
R687
R686
R685
X651
C667
C668
R663
R662
B617
R252
R689
C672
C655
R658
R657
C658
C654
C652
C651
R693
C661
C662
C663
R661
TP2 GND
W601
C653
R652
R651
R251
R690
R691
R692
C657
R684
C684
R694
R667
B615
B607
R664
C665
R666
R665
C666
C612
TP1 ARF
R631
C632
R279
C664
R683
B613
R633
R671
R672
R673
IC651
B628
C617
C616
R612
C615
C614
C613
C611
R611
C623
R635
C624
R632
B614
R255
R253
C674
C671
R674
B629
Q631
C631
R634
R283
R257
R681
R679
R678
R680
C622
C610
C621
R606
C607
C608
C609
(OPT-6)
B603
B605
B619 (OPT-7)
B604
B612
CN601
R256
R254
R281
C281
IC601
B611
R601
C633
R278
R277
R832
C801
CN801
R607
R605
C606
R604
R603
C605
R602
C604
C603
C602
R811
C601
R276
R831
R802
R801
C811
B601
C814
C253
C251
B610
R807
R808
C252
B609
X251
B630
B633
B634
C812
C813
R682
R677
IC801
C802
R636
R676
R675
C254
R804
C822
R805
R806
C821
R803
E
F
G
H
I

<<MEMO>>

PARTS LIST

[XL-R5000BK]

* All printed circuit boards and its assemblies are not available as service parts.

Area suffix

B ---------- U.K.
E ---------- Continental Europe
EN ---------- Northern Europe
J ---------- U.S.A.
C ---------- Canada

- Contents -

Exploded view of general assembly and parts list ---------- 3-2
CD changer mechanism assembly and parts list ---------- 3-6
CD mechanism assembly and parts list ---------- 3-8
Electrical parts list ---------- 3-9
Packing materials and accessories parts list ---------- 3-16

■ Parts list (General assembly)

Block No. M1MM

⚠	Item	Parts number	Parts name	Q'ty	Description	Area
	1	LV10359-004A	FRONT PANEL	1		B,E,EN
		LV10359-003A	FRONT PANEL	1		J,C
	2	VJD5429-001SS	JVC MARK	1		
	3	LV20720-001A	FL LENS	1		
	4	FSJD4001-002	INDICATOR	1		
	5	E408131-002	REMOTE LENS	1		
	6	LV20721-002A	POWER BUTTON	1		B,E,EN
		LV20721-001A	POWER BUTTON	1		J,C
	7	LV31811-001A	INDICATOR(C)	1		
	8	LV20723-001A	P.BUTTON ASSY	1		
	9	LV41613-001A	INDICATOR(A)	1		
	10	LV20722-001A	P.BUTTON(PLAY)	1		
	11	LV31812-001A	P.BUTTON(MENU)	1		
	12	LV41614-001A	INDICATOR(B)	1		
	13	LV31814-001A	JOG KNOB	1		
	14	LV31815-001A	VOL.KNOB	1		
	15	LV40061-001A	KNOB	2		
	16	LV40072-001A	MIC BRACKET	1		
	17	VKL6752-001	SNAP PLATE	2	FOR JACK	
	18	QYSDSF2608Z	SCREW	1	FOR MIC BKT	
	19	QYSDSF2608Z	SCREW	9	FOR PCB A	
	20	QYSDSF2608Z	SCREW	8	FOR PCB B	
	21	QYSDSF2608Z	SCREW	5	FOR PCB C	
	22	LV10014-002A	CHASSIS BASE	1		
	23	QZF6019-001	FOOT	2	FRONT	
	24	QZF6019-001	FOOT	2	REAR	B,E,EN
		E47227-037	FOOT	2	REAR	J,C
	25	QYSBST3010Z	T.SCREW	4	FOR FOOT	
	26	LV31244-002A	SPACER	2		
	27	QYSBSG3008M	T.SCREW	2	SPACER+CHASSIS	
	28	LV40062-001A	CD BRACKET	4		
	29	QYSBST3006Z	T.SCREW	4	FOR CD BKT	
	30	LV31813-001A	CDR BRACKET(F)	1		
	31	QYSBST3006Z	T.SCREW	2	FOR CDR BKT(F)	
	32	LV41616-001A	CDR BRACKET(R)	2		
	33	QYSBST3006Z	T.SCREW	2	FOR CDR BKT(R)	
	34	QYSBSTG3006Z	T.SCREW	4	FOR MAIN PWB	
	35	LV20725-001A	MECHA BASE	1		
	36	LV30225-079A	SPACER	1		
	37	QYSBST3006Z	T.SCREW	4		
⚠	38	QQT0307-002	POWER TRANS	1		B,E,EN
⚠		QQT0307-001	POWER TRANS	1		J,C
	39	QYSBST3006Z	T.SCREW	4	FOR TRANS	
	40	QYSBSG3008M	T.SCREW	3	FRONT+CHASSIS	
	41	QYSBSTG3006Z	T.SCREW	1	H.P PWB+CHASSIS	
⚠	42	----------	RC3 MECHA UNIT	1		
	43	QYSBST3008Z	T.SCREW	4	RC3+CD BKT	
	44	E309662-001SM	DISC STOPPER	1		

■ Parts list (General assembly)

Block No. M1MM

⚠	Item	Parts number	Parts name	Q'ty	Description	Area
	45	QYSBSF3008Z	SCREW	1	RC3+DISC STOPPE	
	46	LV30033-001A	FITTING(L)	1		
	47	LV30035-001A	FITTING(C)	1		
	48	LV30037-003A	FITTING(U)	1		
	49	CRD-RA1	CDR UNIT	1		
	50	LV20726-001A	FITTING(CDR)	1		
	51	LV41617-001A	CDR MARK	1		
	52	QYSBSG3035Z	T.SCREW	2	BASE+CDR MECHA	
	53	QYSBST3025Z	T.SCREW	2	BASE+CDR MECHA	
	54	LV41884-001A	SPACER	1		
	55	LV20798-001A	SHIELD CASE	1		
	56	QYSBST3006Z	T.SCREW	4	BASE+SHIELD CAS	
	57	LV41894-001A	SHIELD TAPE	1		
	58	QQR1120-001	FERRITE CORE	1	FOR CDR FFC 17P	
	59	LV30225-079A	SPACER	1		
	60	LV20010-009A	REAR PANEL	1		B,E,EN
		LV20010-008A	REAR PANEL	1		J,C
⚠	61	QMP3900-200	POWER CORD	1		E,EN
⚠		QMP5530-008	POWER CORD	1		B
⚠		QMPD220-200-JD	POWER CORD	1		J,C
	62	QHS3771-108	CORD STOPPER	1		B,E,EN
		QHS4077-108	CORD STOPPER	1		J,C
	63	QYSBSG3008M	T.SCREW	3	REAR+CHASSIS	
	64	QYSBSG3008M	T.SCREW	2		
	65	QYSBSG3008M	T.SCREW	1	REAR+LINE	
	66	QYSBSG3008M	T.SCREW	2	REAR+HEAT SINK	
	67	QYSBSG3008M	T.SCREW	1	REAR+COMP LINK	
	68	QYSBSG3008M	T.SCREW	1	FOR ARTH PLATE	
	69	QUQ412-1620CJ	FFC WIRE	1	VOL.- MAIN	
	70	QUQ412-1514CM	FFC WIRE	1	FL - MAIN	
	71	QUQ412-1118DJ	FFC WIRE	1	KEY - MAIN	
	72	QUQ412-0508CJ	FFC WIRE	1	H.P - MAIN	
	73	QUQ412-0420CF	FFC WIRE	1	MIC - MAIN	
	74	QUQ110-1908AJ	FFC WIRE	1	3CD - MAIN	
	75	QUQ110-1710AJ	FFC WIRE	1	CDR DG - DG I/O	
	76	QUQ110-0912AJ	FFC WIRE	1	CDR I/F - MAIN	
	77	QJJ015-061001	SIN CR C-C WIRE	1	CDR POWER - MAI	
	78	QJJ010-041404	SIN CR C-C WIRE	1	CDR - DG I/O	
⚠	79	QMF51E2-R25-J1	FUSE	1	F901	B,E,EN
⚠		QMF51U1-R80	FUSE	1	F901	J,C
⚠	80	QMF51E2-R25-J1	FUSE	1	F902	B,E,EN
⚠		QMF51U1-R80	FUSE	1	F902	J,C
⚠	81	QMF51U1-1R25-J1	FUSE	1	F903	J,C
⚠		QMF51E2-1R25-J1	FUSE	1	F903	B,E,EN
⚠	82	QMF51U1-1R6-J1	FUSE	1	F904	J,C
⚠		QMF51E2-1R6-J1	FUSE	1	F904	B,E,EN
	83	LV20009-311A/S/	METAL COVER	1		
	84	E406308-003	SPECIAL SCREW	4	TOP(SIDE)	

■ Parts list (General assembly)

Block No. M1MM

⚠	Item	Parts number	Parts name	Q'ty	Description	Area
	85	QYSBSG3008M	T.SCREW	2	TOP+REAR	
	86	LV40203-002A	HEAT SINK	1	IC921	
	87	QYSPSPD3008Z	SCREW	4	IC921	
	88	E70306-001	HEAT SINK	1	IC921	
	89	QYSBSG3008E	T.SCREW	1	IC921	
	90	LV30225-083A	SPACER	1		
	91	LV31897-001A	FL HOLDER	1		
	92	LV41884-002A	SPACER	1		

Exploded view of general assembly and parts list

Block No. M 1 M M

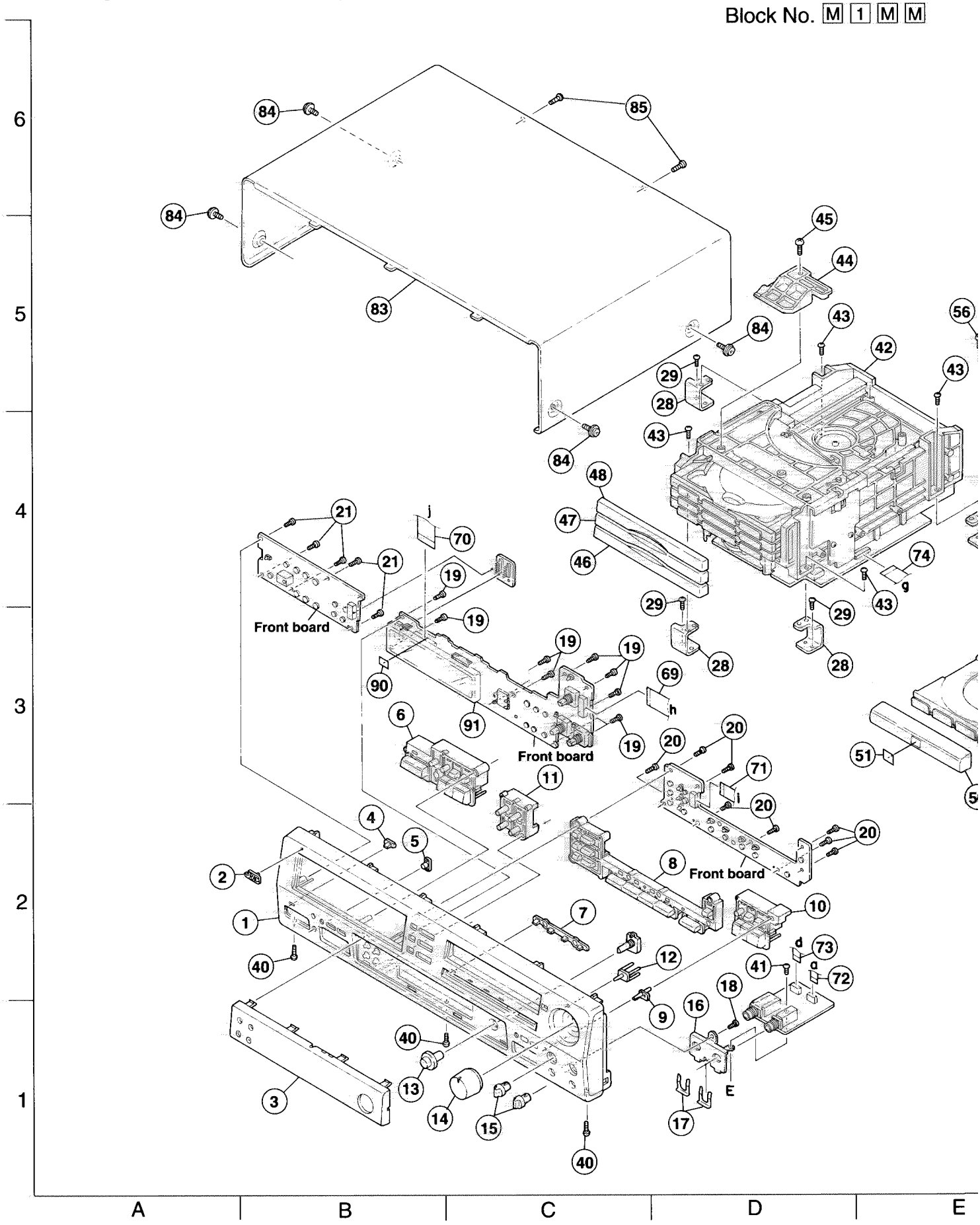

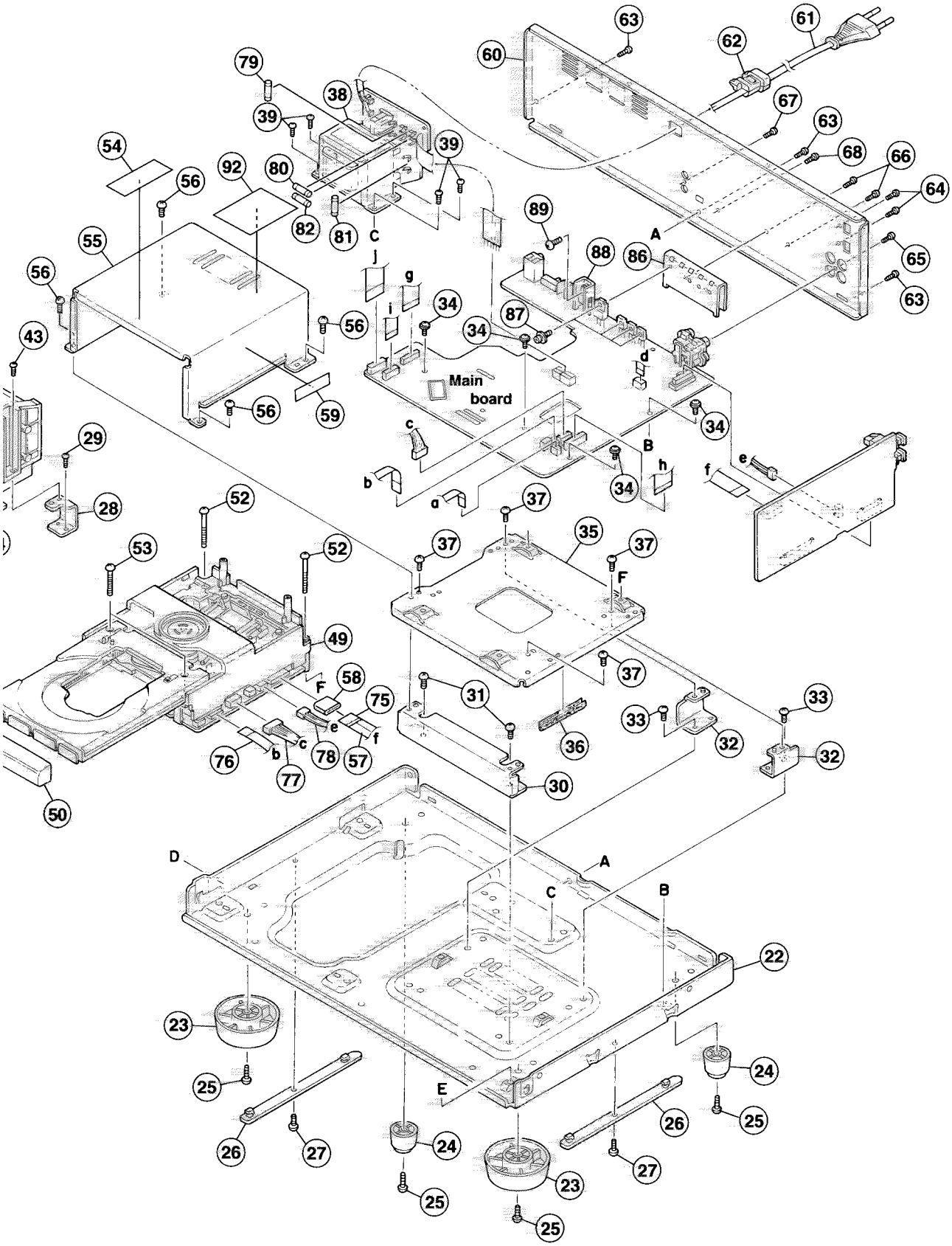

E	F	G	H	I

CD changer mechanism assembly and parts list

RC3-1

Block No. M 2 M M

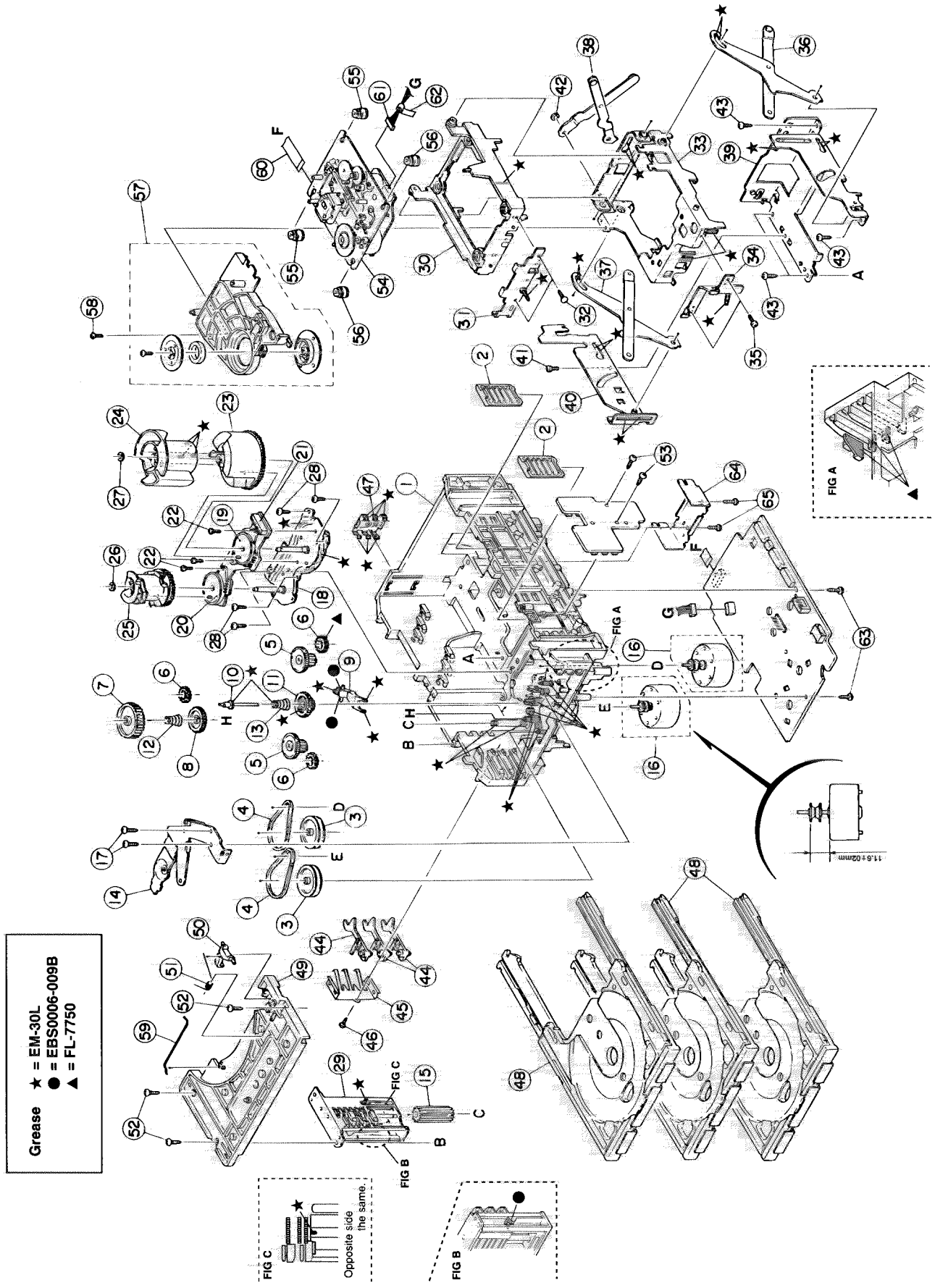

■ Parts list (CD changer mechanism)

Block No. M2MM

⚠	Item	Parts number	Parts name	Q'ty	Description	Area
	1	VKS1144-003	CHASSIS	1		
	2	VKS3698-003	TRAY GUIDE	2		
	3	VKS5532-003	PULLEY GEAR	2		
	4	VKB3000-164	BELT	2		
	5	VKS5505-003	GEAR B	2		
	6	VKS5506-002	GEAR C	3		
	7	VKS5507-002	CROSS GEAR U	1		
	8	VKS5508-002	CROSS GEAR L	1		
	9	VKS5510-003	SELECT LEVER	1		
	10	VKH5769-001	S.G.SHAFT	1		
	11	VKS5511-002	SELECT GEAR	1		
	12	LV40612-001A	COMP.SPRING	1		
	13	VKW5155-003	COMP.SPRING	1	FOR SELECT GEAR	
	14	VKM3846-002	GEAR BRACKET	1		
	15	VKS5509-002MM	CYLINDER GEAR	1		
	16	MSN5D257A-SA2	DC MOTOR ASS'Y	2		
	17	QYSPSPD2616Z	SCREW	2	FOR MOTOR	
	18	VKM3825-00AMM	C.G.BASE ASS'Y	1		
	19	VKZ3172-00ASS	CAM SW. R ASS'Y	1		
	20	VKZ3173-00ASS	CAM SW. L ASS'Y	1		
	21	QGB2021L1-10	CONNECTOR	1	CN805	
	22	QYSPST2606Z	SCREW	3	FOR CAM SW.	
	23	VKS2263-002MM	CAM R1	1		
	24	VKS2264-002MM	CAM R2	1		
	25	VKS2265-002MM	CAM GEAR L	1		
	26	WDL316050MM	SLIT WASHER	1	FOR CAM GEAR L	
	27	WDL316050MM	SLIT WASHER	1		
	28	QYSBSF2608Z	T.SCREW	4	FOR C.GEAR BASE	
	29	VKS3702-00FMM	DRIVE UNIT	1		
	30	VKS2247-004	MECHA HOLDER A	1		
	31	VKL7767-00B	BRACKET ASS'Y	1		
	32	QYSBSF2606Z	SCREW	2	FOR BRACKET	
	33	VKM3860-00A	M.HOLDER B AS'Y	1		
	34	VKL7802-00C	M.HOLDER C AS'Y	1		
	35	QYSDST2604Z	SCREW	2	FOR M.HOLDER C	
	36	VKL7810-00A	LIFTER ASS'Y R	1		
	37	VKL7811-00A	LIFTER ASS'Y L	1		
	38	VKL7812-00A	LIFTER ASS'Y H	1		
	39	VKL2732-002	LIFTER BASE	1		
	40	VKM3857-001	LIFTER BRACKET	1		
	41	QYSDST2604Z	SCREW	1		
	42	WDL266035-2	SLIT WASHER	1		
	43	QYSBSF2608Z	T.SCREW	4		
	44	VKS5514-002MM	LOCK LEVER	3		
	45	VKY3133-002MM	RETURN SPRING	1		
	46	QYSBSF2608Z	T.SCREW	1	FOR RETURN SP.	
	47	VKY3134-003MM	CLICK SPRING	1		
	48	VKS2252-00E	TRAY ASS'Y	3		

■ Parts list (CD changer mechanism)

Block No. M2MM

⚠	Item	Parts number	Parts name	Q'ty	Description	Area
	49	VKS2250-003	TOP BRACKET	1		
	50	VKS5515-002	S.TRAY STOPPER	1		
	51	VKW5156-004	TORSION SPRING	1		
	52	QYSBSF2608Z	T.SCREW	3		
	53	QYSBSF2608Z	T.SCREW	2		
	54	----------	CD MECHA	1		
	55	LV40761-003A	INSULATOR	2		
	56	LV40866-002A	INSULATOR	2		
	57	VKS3703-00G	CLAMPER ASS'Y	1		
	58	QYSPST2606Z	SCREW	1		
	59	VKW5187-001	ROD	1		
	60	QUQ610-1509AJ	FFC WIRE	1	TRAVERSE 15	
	61	EWS176-008	FLAT WIRE	1	TRAVERSE 6	
	62	VYSA1R2-033	SPACER	1	FOR EWS176-008	
	63	QYSBSF2608Z	T.SCREW	2	FOR CD CB	
	64	LE30611-001A	C.B HOLDER	1	FOR CD CB	
	65	QYSBSF3008Z	SCREW	2	FOR HOLDER	

CD mechanism assembly and parts list

Block No. M 3 M M

Grease Point
FG-87HS
(Grease to apply have to be a little for the exchange.)

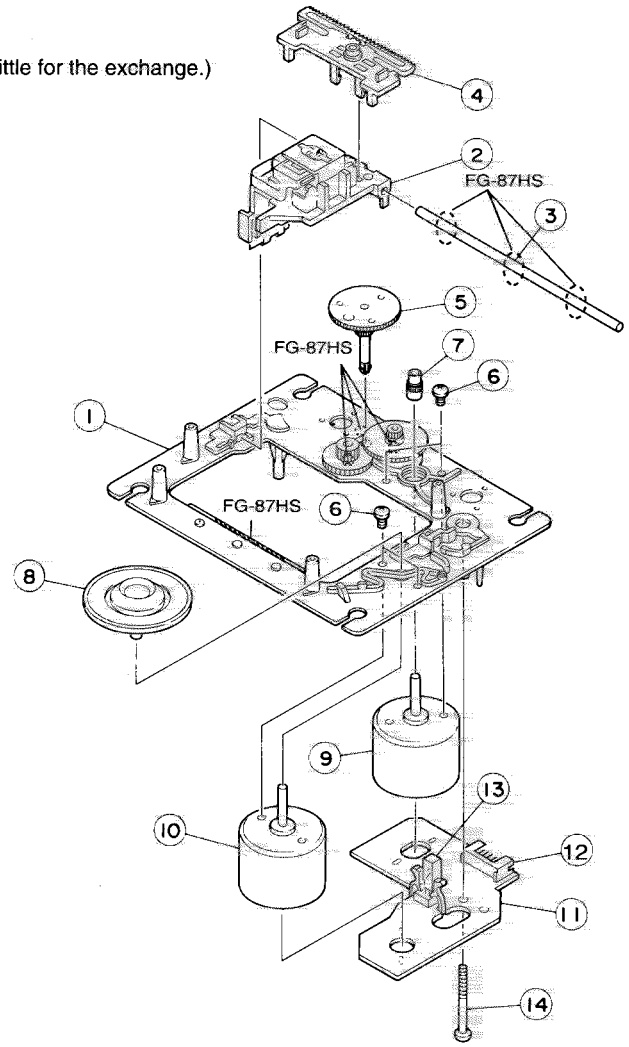

EXL-M7TMB
EXL-M7MB

■ Parts list (CD mechanism)

Block No. M2MM

⚠	Item	Parts number	Parts name	Q'ty	Description	Area
	1	E102731-221SM	MECHA BASE	1		
	2	OPTIMA-7B	OPTICAL PICK UP	1		
	3	E406777-002SM	CD SHAFT	1		
	4	LV31002-001A	CD RACK	1		
	5	E307745-441SM	MECHA GEAR	1		
	6	QYSDSP2003N	SCREW	4		
	7	E406750-442SM	PINION GEAR	1		
	8	EPB-001PK	TURN TABLE	1	SINGLE CD	
		EPB309173PKA	TURN TABLE	1	CHANGER CD	
	9	E406784-001	FEED MOTOR	1		
	10	QAR0130-001	SPPINDLE MOTOR	1		
	11	EMW10190-441	P.C.BOARD	1		
	12	QGA2001F1-06	6P PLUG ASSY	1		
	13	QSW0506-001	LEAF SWITCH	1		
	14	E75832-221SS	SPECIAL SCREW	1		

■ Electrical parts list (Main board)

Block No. 01

⚠	Item	Parts number	Parts name	Remarks	Area
	C 111	QTE1V06-106Z	E CAPACITOR		
	C 112	QCBB1HK-101Y	C CAPACITOR	100PF 10% 50V	
	C 113	QCBB1HK-101Y	C CAPACITOR	100PF 10% 50V	
	C 114	QTE1V06-106Z	E CAPACITOR		
	C 115	QFVJ1HJ-563Z	M.M.CAPACITOR	.056MF 5% 50V	
	C 171	QENC1HM-105Z	NP E.CAPACITOR	1.0MF 20% 50V	
	C 172	QETN1HM-475Z	E CAPACITOR	4.7MF 20% 50V	
	C 181	QDXB1CM-222Y	C CAPACITOR		
	C 182	QTE1E06-226Z	E CAPACITOR		
	C 211	QTE1V06-106Z	E CAPACITOR		
	C 212	QCBB1HK-101Y	C CAPACITOR	100PF 10% 50V	
	C 213	QCBB1HK-101Y	C CAPACITOR	100PF 10% 50V	
	C 214	QTE1V06-106Z	E CAPACITOR		
	C 215	QFVJ1HJ-563Z	M.M.CAPACITOR	.056MF 5% 50V	
	C 271	QENC1HM-105Z	NP E.CAPACITOR	1.0MF 20% 50V	
	C 272	QETN1HM-475Z	E CAPACITOR	4.7MF 20% 50V	
	C 281	QDXB1CM-222Y	C CAPACITOR		
	C 282	QTE1E06-226Z	E CAPACITOR		
	C 301	QCFB1HZ-104Y	C CAPACITOR	.10MF +80:-20%	
	C 303	QCS11HJ-270	C CAPACITOR	27PF 5% 50V	
	C 351	QCFB1HZ-104Y	C CAPACITOR	.10MF +80:-20%	
	C 352	QETN1CM-107Z	E CAPACITOR	100MF 20% 16V	
	C 353	QCFB1HZ-104Y	C CAPACITOR	.10MF +80:-20%	
	C 361	QCZ0205-155Z	ML C CAPACITOR	1.5MF	
	C 362	QETN1AM-227Z	E CAPACITOR	220MF 20% 10V	
	C 363	QCFB1HZ-104Y	C CAPACITOR	.10MF +80:-20%	
	C 364	QETN1HM-106Z	E CAPACITOR	10MF 20% 50V	
	C 365	QCZ0205-155Z	ML C CAPACITOR	1.5MF	
	C 366	QETM1EM-108	E CAPACITOR	1000MF 20% 25V	
	C 367	QCZ0205-155Z	ML C CAPACITOR	1.5MF	
	C 368	QETN1HM-106Z	E CAPACITOR	10MF 20% 50V	
	C 369	QCFB1HZ-104Y	C CAPACITOR	.10MF +80:-20%	
	C 501	QEZ0507-22AZ	EDL.CAPACITOR	PF	
	C 502	QETN1HM-475Z	E CAPACITOR	4.7MF 20% 50V	
	C 504	QDYB1CM-103Y	C CAPACITOR		
	C 507	QCS11HJ-220	C CAPACITOR	22PF 5% 50V	
	C 508	QCS11HJ-220	C CAPACITOR	22PF 5% 50V	
	C 511	QCFB1HZ-104Y	C CAPACITOR	.10MF +80:-20%	
	C 512	QCFB1HZ-104Y	C CAPACITOR	.10MF +80:-20%	
	C 541	QDYB1CM-103Y	C CAPACITOR		
	C 543	QDX31EM-473Z	C CAPACITOR		
	C 801	QCFB1HZ-104Y	C CAPACITOR	.10MF +80:-20%	
	C 802	QTE1E28-476Z	E CAPACITOR		
	C 803	QCFB1HZ-104Y	C CAPACITOR	.10MF +80:-20%	
	C 804	QTE1E28-476Z	E CAPACITOR		
	C 871	QDYB1CM-103Y	C CAPACITOR		
	C 872	QETN1EM-476Z	E CAPACITOR	47MF 20% 25V	
	C 873	QDYB1CM-103Y	C CAPACITOR		
	C 874	QETN1EM-476Z	E CAPACITOR	47MF 20% 25V	
	C 881	QETN1HM-105Z	E CAPACITOR	1.0MF 20% 50V	
	C 901	QETM1EM-228	E CAPACITOR	2200MF 20% 25V	
	C 902	QETM1EM-108	E CAPACITOR	1000MF 20% 25V	
	C 903	QETN1EM-476Z	E CAPACITOR	47MF 20% 25V	
	C 904	QETN1AM-107Z	E CAPACITOR	100MF 20% 10V	
	C 905	QTE1E28-107Z	E CAPACITOR		
	C 906	QTE1E28-107Z	E CAPACITOR		
	C 907	QETN1HM-225Z	E CAPACITOR	2.2MF 20% 50V	
	C 908	QETM0JM-338	E CAPACITOR	3300MF 20% 6.3V	
	C 909	QCF11HZ-103	C CAPACITOR	.010MF +80:-20%	
	C 910	QCF11HZ-103	C CAPACITOR	.010MF +80:-20%	
	C 911	QCF11HZ-103	C CAPACITOR	.010MF +80:-20%	
	C 912	QCF11HZ-103	C CAPACITOR	.010MF +80:-20%	
	C 913	QCF11HZ-103	C CAPACITOR	.010MF +80:-20%	
	C 915	QETN1CM-107Z	E CAPACITOR	100MF 20% 16V	

⚠	Item	Parts number	Parts name	Remarks	Area
	C 916	QETN1AM-477Z	E CAPACITOR	470MF 20% 10V	
	C 917	QETM1EM-688	E CAPACITOR	6800MF 20% 25V	
	C 921	QETM1EM-688	E CAPACITOR	6800MF 20% 25V	
	C 922	QCF11HZ-103	C CAPACITOR	.010MF +80:-20%	
	C 923	QETN1HM-105Z	E CAPACITOR	1.0MF 20% 50V	
	C 924	QETN0JM-108Z	E CAPACITOR	1000MF 20% 6.3V	
	C 926	QCF11HZ-103	C CAPACITOR	.010MF +80:-20%	
	C 927	QCF11HZ-103	C CAPACITOR	.010MF +80:-20%	
	C 930	QDYB1CM-103Y	C CAPACITOR		
	C 931	QDYB1CM-103Y	C CAPACITOR		
	C 932	QETN1AM-477Z	E CAPACITOR	470MF 20% 10V	
	C 933	QETN0JM-108Z	E CAPACITOR	1000MF 20% 6.3V	
	C 941	QETN1HM-227Z	E CAPACITOR	220MF 20% 50V	
	C 942	QETN1JM-227Z	E CAPACITOR	220MF 20% 63V	
	C 943	QETN1HM-106Z	E CAPACITOR	10MF 20% 50V	
	C 944	QETN1HM-106Z	E CAPACITOR	10MF 20% 50V	
	C 945	QETN1CM-107Z	E CAPACITOR	100MF 20% 16V	
	C 991	QETN1HM-474Z	E CAPACITOR	.47MF 20% 50V	
	C 992	QDGB1HK-102Y	C CAPACITOR		
	C 993	QDGB1HK-102Y	C CAPACITOR		
	CN 1	QNZ0079-001Z	TAB		
	CN 2	QNZ0079-001Z	TAB		
	CN301	QGB2501J1-07	B TO B CONNE	MAIN PWB	
	CN311	QGB2510J1-14	CONNECTOR	MAIN PCB FOR OP	
	CN351	QGB2501K1-07	CONNECTOR	OPT PWB	
	CN361	QGB2510K2-14	CONNECTOR	OPT DAC PCB	
	CN501	QGF1205C1-15	CONNECTOR		
	CN502	QGF1205C1-11	CONNECTOR		
	CN504	QGF1016C1-09	FFC/FPC CONNECT		
	CN505	QGF1205C1-06	CONNECTOR	FOR FLASH WRITE	
	CN506	QGF1016C1-17	CONNECTOR	FOR CDR DIGITAL	
	CN801	QGA2001C1-06	6P PLUG ASSY	CDR UNIT POWER	
	CN802	QGA2001C1-04	4P PLUG ASSY	CDR UNIT ANALOG	
	CN811	QGF1016C1-19	CONNECTOR	TO CD UNIT	
	CN841	QGF1205C1-16	CONNECTOR	FRONT VOL	
	CN842	QGF1205C1-05	CONNECTOR	TO HP AMP.JACK	
	CN861	QGF1205C1-04	CONNECTOR	TO MIC&HP PWB	
	CN901	QGD2501C1-04Z	SOCKET		
	CN902	QGD2501C1-05Z	SOCKET		
	C1501	QDYB1CM-822Y	C CAPACITOR		
	C1502	QDXB1CM-152Y	C CAPACITOR		
	C1503	QDXB1CM-152Y	C CAPACITOR		
	C1504	QTE1V06-106Z	E CAPACITOR		
	C2501	QDYB1CM-822Y	C CAPACITOR		
	C2502	QDXB1CM-152Y	C CAPACITOR		
	C2503	QDXB1CM-152Y	C CAPACITOR		
	C2504	QTE1V06-106Z	E CAPACITOR		
	D 301	1SS133-T2	SI DIODE		
	D 302	1SS133-T2	SI DIODE		
	D 501	1SS133-T2	SI DIODE		
	D 502	1SS133-T2	SI DIODE		
	D 503	1SS133-T2	SI DIODE		
	D 504	1SS133-T2	SI DIODE		
	D 541	1SS133-T2	SI DIODE		
	D 811	1SS133-T2	SI DIODE	CD STATUS	
⚠	D 901	1SR35-400A-T5	DIODE		
⚠	D 902	1SR35-400A-T5	DIODE		
⚠	D 903	1SR35-400A-T5	DIODE		
⚠	D 904	1SR35-400A-T5	DIODE		
	D 905	MTZJ5.6B-T2	ZENER DIODE		
	D 906	1SS133-T2	SI DIODE		
	D 907	1SS133-T2	SI DIODE		
	D 908	MTZJ10A-T2	ZENER DIODE		
	D 909	1SS133-T2	SI DIODE		

■ Electrical parts list (Main board)

Block No. 01

⚠	Item	Parts number	Parts name	Remarks	Area
⚠	D 910	1SR35-400A-T5	DIODE		
⚠	D 911	1SR35-400A-T5	DIODE		
⚠	D 912	1SR35-400A-T5	DIODE		
⚠	D 913	1SR35-400A-T5	DIODE		
	D 914	1SS133-T2	SI DIODE		
	D 915	1SS133-T2	SI DIODE		
⚠	D 916	MTZJ5.6C-T2	ZENER DIODE		
⚠	D 921	1GWJ42-T5	DIODE		
⚠	D 922	1GWJ42-T5	DIODE		
⚠	D 923	1GWJ42-T5	DIODE		
⚠	D 924	1GWJ42-T5	DIODE		
	D 925	1SS133-T2	SI DIODE		
	D 927	1SR35-400A-T5	DIODE		
⚠	D 928	MTZJ6.8A-T2	ZENER DIODE		
⚠	D 941	1SR35-400A-T5	DIODE		
⚠	D 942	1SR35-400A-T5	DIODE		
	D 943	MTZJ36C-T2	Z.DIODE		
	D 944	1SS133-T2	SI DIODE		
	D 945	MTZJ5.6B-T2	ZENER DIODE		
	D 981	1SS133-T2	SI DIODE		
	D 982	1SS133-T2	SI DIODE		
	D 991	1SS133-T2	SI DIODE		
	D 992	1SS133-T2	SI DIODE		
	EP541	E409182-001SM	GRAND TERMINAL		
	EP801	QNZ0136-001Z	EARTH PLATE	CDR AGND TERMIN	
	FW901	QUM029-12CGZ3	PARA RIBON WIRE	TRANS-MAIN	
	IC301	TC74HC00AP	IC	D.OUT SEL	
	IC321	UPC78L05J-T	I C		
	IC361	AK4393VF-X	IC	DAC	
	IC362	NJM4580L	IC	DAC LPF .CDR	
	IC501	UPD784214AGF506	IC(MCU)	CPU	
	IC502	IC-PST600/H/-T	IC	RESET	
	IC811	NJM4580L	IC	CD LPF	
	IC821	BU4066BC	IC	LINE OUT SEL	
	IC831	BU4066BC	IC	REC SEL1	
	IC841	BU4066BC	IC	REC SEL2	
	IC861	BU4066BC	IC	CD DRT SWITCH	
	IC871	BA15218N	IC	LINE IN AMP	
	IC881	NJM4580L	IC	LINE OUT BUFFER	
⚠	IC901	BA05ST-V5	IC	CDR SW 5V/1A	
⚠	IC921	UPC24M05AHF	IC	LOGIC US 5V/0.5	
	J 351	GP1FA550TZ	OPT TRANSMITTER	OPT OUT	
	J 352	GP1FA550RZ	OPT RECEIVER	OPT IN	
	J 541	QNS0073-001	JACK	DCS JACK	
	J 871	QNN0126-001	PIN JACK	LINE JACK	
	K 301	QQR0779-001Z	INDUCTOR		
⚠	L 901	QQR0799-001	INDUCTOR		
	Q 181	2SC2001/LK/-T	TRANSISTOR	L.OUT MUTING	
	Q 182	2SC2001/LK/-T	TRANSISTOR	HP MUTE	
	Q 281	2SC2001/LK/-T	TRANSISTOR	L.OUT MUTING	
	Q 282	2SC2001/LK/-T	TRANSISTOR	HP MUTE	
	Q 361	KRC103M-T	TRANSISTOR		
	Q 501	DTC114ESA-T	D.TRANSISTOR		
	Q 541	KRA103M-T	TRANSISTOR		
	Q 542	KTC3199/GL/-T	TRANSISTOR		
	Q 821	KRA103M-T	TRANSISTOR		
	Q 822	KRC103M-T	TRANSISTOR		
	Q 831	KRA103M-T	TRANSISTOR		
	Q 832	KRA103M-T	TRANSISTOR		
	Q 841	KRA103M-T	TRANSISTOR		
	Q 842	KRA103M-T	TRANSISTOR		
	Q 861	KRA103M-T	TRANSISTOR		
	Q 862	KRC103M-T	TRANSISTOR		
	Q 881	2SA933S/RS/-T	TRANSISTOR		

⚠	Item	Parts number	Parts name	Remarks	Area
⚠	Q 901	2SC3422/OY/	TRANSISTOR		
	Q 902	KTC3199/GL/-T	TRANSISTOR		
	Q 903	2SK301/QR/-T	TRANSISTOR(FET)		
	Q 904	2SA933S/RS/-T	TRANSISTOR		
⚠	Q 905	2SA1359/OY/	TRANSISTOR		
	Q 906	2SK301/QR/-T	TRANSISTOR(FET)		
⚠	Q 907	2SC3422/OY/	TRANSISTOR		
	Q 908	KTC3199/GL/-T	TRANSISTOR		
⚠	Q 941	2SB647/CD/-T	TRANSISTOR		
	Q 981	KRC103M-T	TRANSISTOR		
	Q 982	KRC103M-T	TRANSISTOR		
	R 111	QRE141J-223Y	C RESISTOR	22K 5% 1/4W	
	R 112	QRE141J-223Y	C RESISTOR	22K 5% 1/4W	
	R 113	QRE141J-223Y	C RESISTOR	22K 5% 1/4W	
	R 114	QRE141J-222Y	C RESISTOR	2.2K 5% 1/4W	
	R 115	QRE141J-182Y	C RESISTOR	1.8K 5% 1/4W	
	R 116	QRE141J-473Y	C RESISTOR	47K 5% 1/4W	
	R 131	QRE141J-473Y	C RESISTOR	47K 5% 1/4W	
	R 132	QRE141J-123Y	C RESISTOR	12K 5% 1/4W	
	R 141	QRE141J-122Y	C RESISTOR	1.2K 5% 1/4W	
	R 142	QRE141J-102Y	C RESISTOR	1.0K 5% 1/4W	
	R 171	QRE141J-393Y	C RESISTOR	39K 5% 1/4W	
	R 172	QRE141J-473Y	C RESISTOR	47K 5% 1/4W	
	R 173	QRE141J-393Y	C RESISTOR	39K 5% 1/4W	
	R 176	QRE141J-103Y	C RESISTOR	10K 5% 1/4W	
	R 181	QRE141J-474Y	C RESISTOR	470K 5% 1/4W	
	R 182	QRE141J-471Y	C RESISTOR	470 5% 1/4W	
	R 183	QRE141J-222Y	C RESISTOR	2.2K 5% 1/4W	
	R 184	QRE141J-221Y	C RESISTOR	220 5% 1/4W	
	R 185	QRE141J-102Y	C RESISTOR	1.0K 5% 1/4W	
	R 186	QRE141J-472Y	C RESISTOR	4.7K 5% 1/4W	
	R 211	QRE141J-223Y	C RESISTOR	22K 5% 1/4W	
	R 212	QRE141J-223Y	C RESISTOR	22K 5% 1/4W	
	R 213	QRE141J-223Y	C RESISTOR	22K 5% 1/4W	
	R 214	QRE141J-222Y	C RESISTOR	2.2K 5% 1/4W	
	R 215	QRE141J-182Y	C RESISTOR	1.8K 5% 1/4W	
	R 216	QRE141J-473Y	C RESISTOR	47K 5% 1/4W	
	R 231	QRE141J-473Y	C RESISTOR	47K 5% 1/4W	
	R 232	QRE141J-123Y	C RESISTOR	12K 5% 1/4W	
	R 241	QRE141J-122Y	C RESISTOR	1.2K 5% 1/4W	
	R 242	QRE141J-102Y	C RESISTOR	1.0K 5% 1/4W	
	R 271	QRE141J-393Y	C RESISTOR	39K 5% 1/4W	
	R 272	QRE141J-473Y	C RESISTOR	47K 5% 1/4W	
	R 273	QRE141J-393Y	C RESISTOR	39K 5% 1/4W	
	R 276	QRE141J-103Y	C RESISTOR	10K 5% 1/4W	
	R 281	QRE141J-474Y	C RESISTOR	470K 5% 1/4W	
	R 282	QRE141J-471Y	C RESISTOR	470 5% 1/4W	
	R 283	QRE141J-222Y	C RESISTOR	2.2K 5% 1/4W	
	R 284	QRE141J-221Y	C RESISTOR	220 5% 1/4W	
	R 285	QRE141J-102Y	C RESISTOR	1.0K 5% 1/4W	
	R 286	QRE141J-472Y	C RESISTOR	4.7K 5% 1/4W	
	R 301	QRE141J-101Y	C RESISTOR	100 5% 1/4W	
	R 302	QRE141J-101Y	C RESISTOR	100 5% 1/4W	
	R 303	QRE141J-181Y	C RESISTOR	180 5% 1/4W	
	R 361	QRE141J-103Y	C RESISTOR	10K 5% 1/4W	
	R 362	QRE141J-101Y	C RESISTOR	100 5% 1/4W	
	R 363	QRE141J-101Y	C RESISTOR	100 5% 1/4W	
	R 364	QRE141J-473Y	C RESISTOR	47K 5% 1/4W	
	R 365	QUY150-050Y	BUS WIRE	B3004	
	R 367	QRE141J-101Y	C RESISTOR	100 5% 1/4W	
	R 368	QRE141J-101Y	C RESISTOR	100 5% 1/4W	
	R 369	QRE141J-101Y	C RESISTOR	100 5% 1/4W	
	R 370	QRE141J-101Y	C RESISTOR	100 5% 1/4W	
	R 501	QRE141J-331Y	C RESISTOR	330 5% 1/4W	

■ Electrical parts list (Main board)

Block No. 01

⚠	Item	Parts number	Parts name	Remarks	Area
	R 502	QRE141J-104Y	C RESISTOR	100K 5% 1/4W	
	R 503	QRE141J-223Y	C RESISTOR	22K 5% 1/4W	
	R 504	QRE141J-102Y	C RESISTOR	1.0K 5% 1/4W	
	R 506	QRE141J-473Y	C RESISTOR	47K 5% 1/4W	
	R 508	QRE141J-223Y	C RESISTOR	22K 5% 1/4W	
	R 509	QRE141J-104Y	C RESISTOR	100K 5% 1/4W	
	R 510	QRE141J-104Y	C RESISTOR	100K 5% 1/4W	
	R 511	QRE141J-102Y	C RESISTOR	1.0K 5% 1/4W	
	R 512	QRE141J-102Y	C RESISTOR	1.0K 5% 1/4W	
	R 513	QRE141J-151Y	C RESISTOR	150 5% 1/4W	
	R 514	QRE141J-102Y	C RESISTOR	1.0K 5% 1/4W	
	R 515	QRE141J-102Y	C RESISTOR	1.0K 5% 1/4W	
	R 516	QRE141J-102Y	C RESISTOR	1.0K 5% 1/4W	
	R 517	QRE141J-102Y	C RESISTOR	1.0K 5% 1/4W	
	R 519	QRE141J-102Y	C RESISTOR	1.0K 5% 1/4W	
	R 520	QRE141J-102Y	C RESISTOR	1.0K 5% 1/4W	
	R 521	QRE141J-102Y	C RESISTOR	1.0K 5% 1/4W	
	R 522	QRE141J-102Y	C RESISTOR	1.0K 5% 1/4W	
	R 523	QRE141J-472Y	C RESISTOR	4.7K 5% 1/4W	
	R 524	QRE141J-472Y	C RESISTOR	4.7K 5% 1/4W	
	R 525	QRE141J-472Y	C RESISTOR	4.7K 5% 1/4W	
	R 526	QRE141J-473Y	C RESISTOR	47K 5% 1/4W	
	R 527	QRE141J-822Y	C RESISTOR	8.2K 5% 1/4W	
	R 528	QRE141J-822Y	C RESISTOR	8.2K 5% 1/4W	
	R 529	QRE141J-822Y	C RESISTOR	8.2K 5% 1/4W	
	R 530	QRE141J-822Y	C RESISTOR	8.2K 5% 1/4W	
	R 531	QRE141J-822Y	C RESISTOR	8.2K 5% 1/4W	
	R 532	QRE141J-472Y	C RESISTOR	4.7K 5% 1/4W	
	R 533	QRE141J-473Y	C RESISTOR	47K 5% 1/4W	
	R 534	QRE141J-473Y	C RESISTOR	47K 5% 1/4W	
	R 535	QRE141J-473Y	C RESISTOR	47K 5% 1/4W	
	R 536	QRE141J-473Y	C RESISTOR	47K 5% 1/4W	
	R 537	QRE141J-473Y	C RESISTOR	47K 5% 1/4W	
	R 539	QRE141J-473Y	C RESISTOR	47K 5% 1/4W	
	R 540	QRE141J-473Y	C RESISTOR	47K 5% 1/4W	
	R 541	QRE141J-223Y	C RESISTOR	22K 5% 1/4W	
	R 542	QRE141J-473Y	C RESISTOR	47K 5% 1/4W	
	R 543	QRE141J-223Y	C RESISTOR	22K 5% 1/4W	
	R 544	QRE141J-221Y	C RESISTOR	220 5% 1/4W	
	R 545	QRE141J-223Y	C RESISTOR	22K 5% 1/4W	
	R 549	QRE141J-101Y	C RESISTOR	100 5% 1/4W	
	R 551	QRE141J-472Y	C RESISTOR	4.7K 5% 1/4W	
	R 555	QRE141J-473Y	C RESISTOR	47K 5% 1/4W	
	R 556	QRE141J-473Y	C RESISTOR	47K 5% 1/4W	
	R 557	QRE141J-473Y	C RESISTOR	47K 5% 1/4W	
	R 558	QRE141J-103Y	C RESISTOR	10K 5% 1/4W	
	R 561	QRE141J-471Y	C RESISTOR	470 5% 1/4W	
	R 562	QRE141J-102Y	C RESISTOR	1.0K 5% 1/4W	
	R 563	QRE141J-101Y	C RESISTOR	100 5% 1/4W	
	R 564	QRE141J-471Y	C RESISTOR	470 5% 1/4W	
	R 565	QRE141J-471Y	C RESISTOR	470 5% 1/4W	
	R 566	QRE141J-101Y	C RESISTOR	100 5% 1/4W	
	R 567	QRE141J-102Y	C RESISTOR	1.0K 5% 1/4W	
	R 568	QRE141J-101Y	C RESISTOR	100 5% 1/4W	
	R 569	QRE141J-101Y	C RESISTOR	100 5% 1/4W	
	R 570	QRE141J-101Y	C RESISTOR	100 5% 1/4W	
	R 571	QRE141J-101Y	C RESISTOR	100 5% 1/4W	
	R 572	QRE141J-101Y	C RESISTOR	100 5% 1/4W	
	R 573	QRE141J-101Y	C RESISTOR	100 5% 1/4W	
	R 574	QRE141J-101Y	C RESISTOR	100 5% 1/4W	
	R 599	QRE141J-152Y	C RESISTOR	1.5K 5% 1/4W	
	R 801	QRE141J-221Y	C RESISTOR	220 5% 1/4W	
	R 802	QRE141J-221Y	C RESISTOR	220 5% 1/4W	
	R 803	QRE141J-221Y	C RESISTOR	220 5% 1/4W	

⚠	Item	Parts number	Parts name	Remarks	Area
	R 804	QRE141J-221Y	C RESISTOR	220 5% 1/4W	
	R 809	QRE141J-472Y	C RESISTOR	4.7K 5% 1/4W	
	R 810	QRE141J-221Y	C RESISTOR	220 5% 1/4W	
	R 811	QRE141J-223Y	C RESISTOR	22K 5% 1/4W	
	R 821	QRE141J-471Y	C RESISTOR	470 5% 1/4W	
	R 822	QRE141J-103Y	C RESISTOR	10K 5% 1/4W	
	R 823	QRE141J-473Y	C RESISTOR	47K 5% 1/4W	
	R 831	QRE141J-222Y	C RESISTOR	2.2K 5% 1/4W	
	R 832	QRE141J-103Y	C RESISTOR	10K 5% 1/4W	
	R 833	QRE141J-473Y	C RESISTOR	47K 5% 1/4W	
	R 834	QRE141J-473Y	C RESISTOR	47K 5% 1/4W	
	R 841	QRE141J-222Y	C RESISTOR	2.2K 5% 1/4W	
	R 842	QRE141J-103Y	C RESISTOR	10K 5% 1/4W	
	R 843	QRE141J-473Y	C RESISTOR	47K 5% 1/4W	
	R 844	QRE141J-473Y	C RESISTOR	47K 5% 1/4W	
	R 861	QRE141J-471Y	C RESISTOR	470 5% 1/4W	
	R 862	QRE141J-103Y	C RESISTOR	10K 5% 1/4W	
	R 863	QRE141J-473Y	C RESISTOR	47K 5% 1/4W	
	R 881	QRE141J-103Y	C RESISTOR	10K 5% 1/4W	
	R 882	QRE141J-223Y	C RESISTOR	22K 5% 1/4W	
	R 883	QRE141J-101Y	C RESISTOR	100 5% 1/4W	
⚠	R 901	QRZ9006-4R7X	F RESISTOR	4.7 1/0W	
	R 902	QRE141J-222Y	C RESISTOR	2.2K 5% 1/4W	
	R 903	QRE141J-622Y	C RESISTOR	6.2K 5% 1/4W	
	R 904	QRE141J-472Y	C RESISTOR	4.7K 5% 1/4W	
⚠	R 905	QRZ9006-4R7X	F RESISTOR	4.7 1/0W	
	R 906	QRE141J-472Y	C RESISTOR	4.7K 5% 1/4W	
	R 908	QRE141J-222Y	C RESISTOR	2.2K 5% 1/4W	
	R 910	QRE141J-222Y	C RESISTOR	2.2K 5% 1/4W	
	R 921	QRE141J-102Y	C RESISTOR	1.0K 5% 1/4W	
	R 925	QRE141J-471Y	C RESISTOR	470 5% 1/4W	
	R 926	QRE141J-471Y	C RESISTOR	470 5% 1/4W	
	R 941	QRE141J-472Y	C RESISTOR	4.7K 5% 1/4W	
⚠	R 942	QRJ146J-4R7X	UNF C.RESISTOR	4.7 5% 1/4W	
	R 943	QRE141J-333Y	C RESISTOR	33K 5% 1/4W	
	R 981	QRE141J-101Y	C RESISTOR	100 5% 1/4W	
	R 982	QRE141J-101Y	C RESISTOR	100 5% 1/4W	
	R 991	QRE141J-103Y	C RESISTOR	10K 5% 1/4W	
	R 992	QRE141J-103Y	C RESISTOR	10K 5% 1/4W	
	R1501	QRE141J-102Y	C RESISTOR	1.0K 5% 1/4W	
	R1502	QRE141J-152Y	C RESISTOR	1.5K 5% 1/4W	
	R1503	QRE141J-101Y	C RESISTOR	100 5% 1/4W	
	R1504	QRE141J-102Y	C RESISTOR	1.0K 5% 1/4W	
	R1505	QRE141J-101Y	C RESISTOR	100 5% 1/4W	
	R1506	QRE141J-152Y	C RESISTOR	1.5K 5% 1/4W	
	R1507	QRE141J-473Y	C RESISTOR	47K 5% 1/4W	
	R1508	QRE141J-151Y	C RESISTOR	150 5% 1/4W	
	R1509	QRE141J-151Y	C RESISTOR	150 5% 1/4W	
	R2501	QRE141J-102Y	C RESISTOR	1.0K 5% 1/4W	
	R2502	QRE141J-152Y	C RESISTOR	1.5K 5% 1/4W	
	R2503	QRE141J-101Y	C RESISTOR	100 5% 1/4W	
	R2504	QRE141J-102Y	C RESISTOR	1.0K 5% 1/4W	
	R2505	QRE141J-101Y	C RESISTOR	100 5% 1/4W	
	R2506	QRE141J-152Y	C RESISTOR	1.5K 5% 1/4W	
	R2507	QRE141J-473Y	C RESISTOR	47K 5% 1/4W	
	R2508	QRE141J-151Y	C RESISTOR	150 5% 1/4W	
	R2509	QRE141J-151Y	C RESISTOR	150 5% 1/4W	
	S 531	QSW0871-001	SLIDE SWITCH	TAPE/CDR	
	X 501	QAX0356-001Z	RESONATOR	10MHZ.EFO-EC100	
	X 502	QAX0401-001	CRYSTAL	CPU SUB CLK	
	Z 91	QNG0019-001Z	FUSE CLIP		
	Z 92	QNG0019-001Z	FUSE CLIP		
	Z 93	QNG0019-001Z	FUSE CLIP		
	Z 94	QNG0019-001Z	FUSE CLIP		
	Z 95	QNG0019-001Z	FUSE CLIP		
	Z 96	QNG0019-001Z	FUSE CLIP		
	Z 97	QNG0019-001Z	FUSE CLIP		
	Z 98	QNG0019-001Z	FUSE CLIP		

■ Electrical parts list (Front board)

Block No. 02

⚠	Item	Parts number	Parts name	Remarks	Area
	C 701	QDYB1CM-103Y	C CAPACITOR		
	C 702	QER41AM-107	E CAPACITOR	100MF 20% 10V	
	C 703	QDGB1HK-681Y	C CAPACITOR		
	C 722	QCFB1HZ-104Y	C CAPACITOR	.10MF +80:-20%	
	C 723	QER41CM-476	E CAPACITOR	47MF 20% 16V	
	C 724	QCFB1HZ-104Y	C CAPACITOR	.10MF +80:-20%	
	C 725	QER41CM-476	E CAPACITOR	47MF 20% 16V	
	C 741	QDYB1CM-103Y	C CAPACITOR		
	C 742	QFV61HJ-393Z	TF CAPACITOR	.039MF 5% 50V	
	C 743	QER41AM-107	E CAPACITOR	100MF 20% 10V	
	C 749	QCBB1HK-101Y	C CAPACITOR	100PF 10% 50V	
	CN701	QGB2012J1-06	CONNECTOR	P.SW PWB	
	CN711	QGG2002M4-06	PIN HEDDER	TO P.SW PWB	
	CN712	QGG2002M4-06	PIN HEDDER	TO FL PWB	
	CN721	QGB2012J1-06	CONNECTOR	FL PWB	
	CN722	QGF1205F1-15	CONNECTOR	FL PWB TO MAIN	
	CN723	QGF1205F1-16	CONNECTOR	AUDIO+LED	
	CN724	QGF1205C1-04	CONNECTOR	MIC +-10V	
	CN725	QGF1205C1-05	CONNECTOR	H.P.	
	CN751	QGF1205F1-11	CONNECTOR	KEY PWB TO MAIN	
	C1201	QCBB1HK-101Y	C CAPACITOR	100PF 10% 50V	
	C1202	QDYB1CM-103Y	C CAPACITOR		
	C1203	QDYB1CM-103Y	C CAPACITOR		
	C1401	QER61HM-475Z	E CAPACITOR	4.7MF 20% 50V	
	C2201	QCBB1HK-101Y	C CAPACITOR	100PF 10% 50V	
	C2202	QDYB1CM-103Y	C CAPACITOR		
	C2203	QDYB1CM-103Y	C CAPACITOR		
	C2401	QER61HM-475Z	E CAPACITOR	4.7MF 20% 50V	
	C6001	QDXB1CM-222Y	C CAPACITOR		
	C6002	QENC1HM-105Z	NP E.CAPACITOR	1.0MF 20% 50V	
	C6003	QCBB1HK-331Y	C CAPACITOR	330PF 10% 50V	
	C6005	QER61HM-475Z	E CAPACITOR	4.7MF 20% 50V	
	C6008	QDYB1CM-103Y	C CAPACITOR		
	C6009	QDYB1CM-103Y	C CAPACITOR		
	C6101	QCFB1HZ-104Y	C CAPACITOR	.10MF +80:-20%	
	C6102	QETN1EM-476Z	E CAPACITOR	47MF 20% 25V	
	C6103	QCFB1HZ-104Y	C CAPACITOR	.10MF +80:-20%	
	C6104	QER41CM-476	E CAPACITOR	47MF 20% 16V	
	C6201	QCFB1HZ-104Y	C CAPACITOR	.10MF +80:-20%	
	C6202	QETN1CM-107Z	E CAPACITOR	100MF 20% 16V	
	C6203	QCFB1HZ-104Y	C CAPACITOR	.10MF +80:-20%	
	C6204	QETN1CM-107Z	E CAPACITOR	100MF 20% 16V	
	C6209	QDYB1CM-103Y	C CAPACITOR		
	D 701	SLR-325VC-T	LED	POWER	
	D 723	SLR-325VC-T	LED	MIX BALANCE	
	D 724	SLR-325VC-T	LED	REC LEVEL	
	D 726	1SS133-T2	SI DIODE		
	D 727	1SS133-T2	SI DIODE		
	D 728	1SS133-T2	SI DIODE		
	D 729	1SS133-T2	SI DIODE		
	D 751	SLR-325MC-T	LED	DISC1	
	D 752	SLR-325MC-T	LED	DISC2	
	D 753	SLR-325MC-T	LED	DISC3	
	D 755	SLR-325VC-T	LED	S-OPT	
	D 756	SLR-325VC-T	LED	S-CD	
	D 757	SLR-325VC-T	LED	S-LINE	
	D 758	SLR-325VC-T	LED	S-MIC	
	DI721	QLF0075-001	FL TUBE		
	IC601	NJM4580L	IC	MIC AMP	
	IC621	BA15218N	IC	HP AMP	
	IC701	SBX3076-52	IC	RM RECIVER	
	IC721	M66004SP	IC	FL DRIVER	
	IC722	BA15218N	IC	MIX AMP	
	JS721	QSW0446-001	R ENCODER	JOG	

⚠	Item	Parts number	Parts name	Remarks	Area
	J6001	QNS0091-001	JACK	MIC JACK	
	J6201	QNS0092-001	JACK	HP JACK	
	Q 701	KRC103M-T	TRANSISTOR	FOR POWER LED	
	Q 723	KRC103M-T	TRANSISTOR	FOR MIX BAL LED	
	Q 724	KRA103M-T	TRANSISTOR	HP DIST KAIZEN	
	Q 726	KTC3199/GL/-T	TRANSISTOR	FOR 1G	
	Q 727	KTC3199/GL/-T	TRANSISTOR	FOR 15G	
	Q 728	KTC3199/GL/-T	TRANSISTOR	FOR 16G	
	Q 729	KRA103M-T	TRANSISTOR		
	Q 730	KRA103M-T	TRANSISTOR		
	Q1401	KTC3199/GL/-T	TRANSISTOR	MIX VR SW	
	Q2401	KTC3199/GL/-T	TRANSISTOR	MIX VR SW	
	R 701	QRE141J-102Y	C RESISTOR	1.0K 5% 1/4W	
	R 702	QRE141J-102Y	C RESISTOR	1.0K 5% 1/4W	
	R 703	QRE141J-122Y	C RESISTOR	1.2K 5% 1/4W	
	R 704	QRE141J-182Y	C RESISTOR	1.8K 5% 1/4W	
	R 705	QRE141J-272Y	C RESISTOR	2.7K 5% 1/4W	
	R 706	QRE141J-332Y	C RESISTOR	3.3K 5% 1/4W	
	R 707	QRE141J-562Y	C RESISTOR	5.6K 5% 1/4W	
	R 708	QRE141J-103Y	C RESISTOR	10K 5% 1/4W	
	R 709	QRE141J-562Y	C RESISTOR	5.6K 5% 1/4W	
	R 710	QRE141J-103Y	C RESISTOR	10K 5% 1/4W	
	R 711	QRE141J-331Y	C RESISTOR	330 5% 1/4W	
	R 721	QRE141J-102Y	C RESISTOR	1.0K 5% 1/4W	
	R 722	QRE141J-102Y	C RESISTOR	1.0K 5% 1/4W	
	R 723	QRE141J-122Y	C RESISTOR	1.2K 5% 1/4W	
	R 724	QRE141J-182Y	C RESISTOR	1.8K 5% 1/4W	
	R 725	QRE141J-272Y	C RESISTOR	2.7K 5% 1/4W	
	R 726	QRE141J-332Y	C RESISTOR	3.3K 5% 1/4W	
	R 729	QRE141J-331Y	C RESISTOR	330 5% 1/4W	
	R 730	QRE141J-331Y	C RESISTOR	330 5% 1/4W	
	R 736	QRE141J-333Y	C RESISTOR	33K 5% 1/4W	
	R 737	QRE141J-333Y	C RESISTOR	33K 5% 1/4W	
	R 738	QRE141J-333Y	C RESISTOR	33K 5% 1/4W	
	R 739	QRE141J-333Y	C RESISTOR	33K 5% 1/4W	
	R 740	QRE141J-333Y	C RESISTOR	33K 5% 1/4W	
	R 741	QRE141J-333Y	C RESISTOR	33K 5% 1/4W	
	R 742	QRE141J-103Y	C RESISTOR	10K 5% 1/4W	
	R 749	QRE141J-223Y	C RESISTOR	22K 5% 1/4W	
	R 751	QRE141J-102Y	C RESISTOR	1.0K 5% 1/4W	
	R 752	QRE141J-102Y	C RESISTOR	1.0K 5% 1/4W	
	R 753	QRE141J-122Y	C RESISTOR	1.2K 5% 1/4W	
	R 754	QRE141J-182Y	C RESISTOR	1.8K 5% 1/4W	
	R 755	QRE141J-272Y	C RESISTOR	2.7K 5% 1/4W	
	R 760	QRE141J-102Y	C RESISTOR	1.0K 5% 1/4W	
	R 761	QRE141J-102Y	C RESISTOR	1.0K 5% 1/4W	
	R 762	QRE141J-122Y	C RESISTOR	1.2K 5% 1/4W	
	R 763	QRE141J-182Y	C RESISTOR	1.8K 5% 1/4W	
	R 764	QRE141J-272Y	C RESISTOR	2.7K 5% 1/4W	
	R 781	QRE141J-331Y	C RESISTOR	330 5% 1/4W	
	R 782	QRE141J-331Y	C RESISTOR	330 5% 1/4W	
	R 783	QRE141J-331Y	C RESISTOR	330 5% 1/4W	
	R 785	QRE141J-331Y	C RESISTOR	330 5% 1/4W	
	R 786	QRE141J-331Y	C RESISTOR	330 5% 1/4W	
	R 787	QRE141J-331Y	C RESISTOR	330 5% 1/4W	
	R 788	QRE141J-331Y	C RESISTOR	330 5% 1/4W	
	R1201	QRE141J-103Y	C RESISTOR	10K 5% 1/4W	
	R1202	QRE141J-104Y	C RESISTOR	100K 5% 1/4W	
	R1204	QRE141J-562Y	C RESISTOR	5.6K 5% 1/4W	
	R1205	QRE141J-680Y	C RESISTOR	68 5% 1/4W	
	R1206	QRE141J-820Y	C RESISTOR	82 5% 1/4W	
	R1401	QRE141J-223Y	C RESISTOR	22K 5% 1/4W	
	R1402	QRE141J-223Y	C RESISTOR	22K 5% 1/4W	
	R1403	QRE141J-103Y	C RESISTOR	10K 5% 1/4W	

■ **Electrical parts list (Front board)** **Block No. 02**

⚠	Item	Parts number	Parts name	Remarks	Area
	R1404	QRE141J-823Y	C RESISTOR	82K 5% 1/4W	
	R2201	QRE141J-103Y	C RESISTOR	10K 5% 1/4W	
	R2202	QRE141J-104Y	C RESISTOR	100K 5% 1/4W	
	R2204	QRE141J-562Y	C RESISTOR	5.6K 5% 1/4W	
	R2205	QRE141J-680Y	C RESISTOR	68 5% 1/4W	
	R2206	QRE141J-820Y	C RESISTOR	82 5% 1/4W	
	R2401	QRE141J-223Y	C RESISTOR	22K 5% 1/4W	
	R2402	QRE141J-223Y	C RESISTOR	22K 5% 1/4W	
	R2403	QRE141J-103Y	C RESISTOR	10K 5% 1/4W	
	R2404	QRE141J-823Y	C RESISTOR	82K 5% 1/4W	
	R6001	QRE141J-221Y	C RESISTOR	220 5% 1/4W	
	R6002	QRE141J-103Y	C RESISTOR	10K 5% 1/4W	
	R6003	QRE141J-103Y	C RESISTOR	10K 5% 1/4W	
	R6004	QRE141J-221Y	C RESISTOR	220 5% 1/4W	
	R6005	QRE141J-123Y	C RESISTOR	12K 5% 1/4W	
	R6006	QRE141J-103Y	C RESISTOR	10K 5% 1/4W	
	R6101	QRE141J-681Y	C RESISTOR	680 5% 1/4W	
	R6102	QRE141J-681Y	C RESISTOR	680 5% 1/4W	
	R6103	QRE141J-681Y	C RESISTOR	680 5% 1/4W	
	R6104	QRE141J-681Y	C RESISTOR	680 5% 1/4W	
	S 701	QSW0683-001Z	PUSH SWITCH	POWER	
	S 702	QSW0683-001Z	PUSH SWITCH	CLOCK/TIMER	
	S 703	QSW0683-001Z	PUSH SWITCH	PITCH OFF	
	S 704	QSW0683-001Z	PUSH SWITCH	PITCH+	
	S 705	QSW0683-001Z	PUSH SWITCH	PITCH-	
	S 706	QSW0683-001Z	PUSH SWITCH	BEST	
	S 707	QSW0683-001Z	PUSH SWITCH	LISTEN	
	S 708	QSW0683-001Z	PUSH SWITCH	SKIP	
	S 709	QSW0683-001Z	PUSH SWITCH	CD REC	
	S 710	QSW0683-001Z	PUSH SWITCH	CD REC	
	S 711	QSW0683-001Z	PUSH SWITCH	CD REC	
	S 712	QSW0683-001Z	PUSH SWITCH	CD REC	
	S 721	QSW0683-001Z	PUSH SWITCH	STOP	
	S 722	QSW0683-001Z	PUSH SWITCH	PLAY	
	S 723	QSW0683-001Z	PUSH SWITCH	FWD	
	S 724	QSW0683-001Z	PUSH SWITCH	BWD	
	S 725	QSW0683-001Z	PUSH SWITCH	MD	
	S 726	QSW0683-001Z	PUSH SWITCH	CD	
	S 751	QSW0683-001Z	PUSH SWITCH	OPEN/CLOSE1	
	S 752	QSW0683-001Z	PUSH SWITCH	OPEN/CLOSE2	
	S 753	QSW0683-001Z	PUSH SWITCH	OPEN/CLOSE3	
	S 754	QSW0683-001Z	PUSH SWITCH	DISC1	
	S 755	QSW0683-001Z	PUSH SWITCH	DISC2	
	S 756	QSW0683-001Z	PUSH SWITCH	DISC3	
	S 760	QSW0683-001Z	PUSH SWITCH	EJECT	
	S 761	QSW0683-001Z	PUSH SWITCH	S-OPT	
	S 762	QSW0683-001Z	PUSH SWITCH	S-CD	
	S 763	QSW0683-001Z	PUSH SWITCH	S-LINE	
	S 764	QSW0683-001Z	PUSH SWITCH	S-MIC	
	S 765	QSW0683-001Z	PUSH SWITCH	CANCEL	
	VR641	QVQ0115-W15	V RESISTOR	MIX VOL	
	VR642	QVQ0296-A14	V RESISTOR	REC VOL	
	VR643	QVQ0117-A14	V RESISTOR	H.P.VOL	

■ Electrical parts list (CD servo board)

Block No. 03

⚠	Item	Parts number	Parts name	Remarks	Area
	C 251	NCS21HJ-100X	C CAPACITOR		
	C 252	NCS21HJ-100X	C CAPACITOR		
	C 253	NCB21EK-104X	C CAPACITOR		
	C 254	QERF1AM-476Z	E CAPACITOR	47MF 20% 10V	
	C 291	QERF1AM-476Z	E CAPACITOR	47MF 20% 10V	
	C 601	NCB21HK-102X	C CAPACITOR		
	C 602	NCB21HK-102X	C CAPACITOR		
	C 603	NCB21HK-223X	C CAPACITOR		
	C 604	NCB21HK-223X	C CAPACITOR		
	C 605	NCS21HJ-680X	C CAPACITOR		
	C 606	NCS21HJ-680X	C CAPACITOR		
	C 607	NCB21CK-105X	C CAPACITOR		
	C 610	NCB21EK-563X	C CAPACITOR		
	C 611	NCF21CZ-105X	C CAPACITOR		
	C 612	QER41HM-105	E CAPACITOR	1.0MF 20% 50V	
	C 613	NCB21CK-105X	C CAPACITOR		
	C 614	NCB21HK-273X	C CAPACITOR		
	C 615	NCB21HK-472X	C CAPACITOR		
	C 616	NCB21HK-103X	C CAPACITOR		
	C 617	NCS21HJ-331X	C CAPACITOR		
	C 619	NCS21HJ-150X	C CAPACITOR		
	C 621	NCB21CK-105X	C CAPACITOR		
	C 623	NCF21CZ-105X	C CAPACITOR		
	C 624	QERF0JM-107Z	E CAPACITOR	100MF 20% 6.3V	
	C 631	QER41CM-106	E CAPACITOR	10MF 20% 16V	
	C 632	NCF21CZ-105X	C CAPACITOR		
	C 633	NCB21HK-223X	C CAPACITOR		
	C 641	NCB21HK-223X	C CAPACITOR		
	C 642	NCB21HK-222X	C CAPACITOR		
	C 643	NCB21EK-104X	C CAPACITOR		
	C 644	NCB21EK-104X	C CAPACITOR		
	C 651	NCS21HJ-120X	C CAPACITOR		
	C 652	NCS21HJ-120X	C CAPACITOR		
	C 653	NCB21EK-104X	C CAPACITOR		
	C 655	NCB21EK-104X	C CAPACITOR		
	C 656	NCB21EK-104X	C CAPACITOR		
	C 657	QER41AM-227	E CAPACITOR	220MF 20% 10V	
	C 658	NCB21EK-104X	C CAPACITOR		
	C 661	NCS21HJ-471X	C CAPACITOR		
	C 663	NCB21HK-223X	C CAPACITOR		
	C 664	NCB21HK-223X	C CAPACITOR		
	C 665	NCB21CK-154X	C CAPACITOR		
	C 667	NCB21CK-105X	C CAPACITOR		
	C 668	NCB21EK-473X	C CAPACITOR		
	C 669	QER41AM-227	E CAPACITOR	220MF 20% 10V	
	C 673	QER41AM-227	E CAPACITOR	220MF 20% 10V	
	C 676	NCB21EK-104X	C CAPACITOR		
	C 677	NCB21EK-104X	C CAPACITOR		
	C 679	QERF0JM-107Z	E CAPACITOR	100MF 20% 6.3V	
	C 680	NCB21EK-104X	C CAPACITOR		
	C 691	NCS21HJ-391X	C CAPACITOR		
	C 692	NCS21HJ-391X	C CAPACITOR		
	C 693	NCB21HK-682X	C CAPACITOR		
	C 694	NCB21HK-682X	C CAPACITOR		
	C 695	NCB21HK-473X	C CAPACITOR		
	C 696	QER41CM-106	E CAPACITOR	10MF 20% 16V	
	C 699	QER41AM-227	E CAPACITOR	220MF 20% 10V	
	C 801	NCB21HK-153X	C CAPACITOR		
	C 802	NCB21HK-472X	C CAPACITOR		
	C 811	NCS21HJ-391X	C CAPACITOR		
	C 812	NCS21HJ-391X	C CAPACITOR		
	C 813	NCS21HJ-391X	C CAPACITOR		
	C 814	NCS21HJ-391X	C CAPACITOR		
	C 815	QEQF1HM-105Z	NP E CAPACITOR	1.0MF 20% 50V	

⚠	Item	Parts number	Parts name	Remarks	Area
	C 816	QEQF1HM-225Z	E CAPACITOR	2.2MF 20% 50V	
	C 821	NCF21CZ-105X	C CAPACITOR		
	C 822	QER41AM-227	E CAPACITOR	220MF 20% 10V	
	C 852	QER41CM-106	E CAPACITOR	10MF 20% 16V	
	C 855	NCB21EK-104X	C CAPACITOR		
	C 859	NCF21CZ-105X	C CAPACITOR		
	C 860	NCF21CZ-105X	C CAPACITOR		
	CN601	QGF1016F3-15	15FFC CONNECTOR		
	CN651	QGF1016F3-19	CONNECTOR		
	CN652	QGF1016F3-05	CONNECTOR		
	CN801	QGA2001C1-06	6P PLUG ASSY		
	CN851	QGD2503F1-03	SOCKET		
	CN854	QGB2016K1-07	CONNECTOR		
	CN855	QGG2002M4-10	CONNECTOR		
	IC251	UPD780024AGKA12	IC		
	IC601	AN8849SB-W	IC		
	IC602	UPC393G2-W	IC		
	IC603	TC7S32F-X	IC		
	IC651	MN35511AL	IC		
	IC652	NJM4580E-W	IC		
	IC801	LA6541-X	IC		
	IC851	TA8409S	IC		
	IC852	TA8409S	IC		
	L 851	QQL01BK-100Z	INDUCTOR		
	L 853	QQL01BK-100Z	INDUCTOR		
	L 854	QQL01BK-100Z	INDUCTOR		
	Q 291	2SB1357/EF/-T	TRANSISTOR		
	Q 631	2SA1037AK/RS/-X	TRANSISTOR		
	Q 842	DTA144EKA-X	TRANSISTOR		
	R 253	NRSA02J-102X	MG RESISTOR		
	R 254	NRSA02J-102X	MG RESISTOR		
	R 255	NRSA02J-102X	MG RESISTOR		
	R 256	NRSA02J-102X	MG RESISTOR		
	R 257	NRSA02J-102X	MG RESISTOR		
	R 258	NRSA02J-102X	MG RESISTOR		
	R 260	NRSA02J-222X	MG RESISTOR		
	R 261	NRSA02J-223X	MG RESISTOR		
	R 262	NRSA02J-223X	MG RESISTOR		
	R 263	NRSA02J-223X	MG RESISTOR		
	R 264	NRSA02J-223X	MG RESISTOR		
	R 265	NRSA02J-223X	MG RESISTOR		
	R 274	NRSA02J-102X	MG RESISTOR		
	R 275	NRSA02J-102X	MG RESISTOR		
	R 276	NRSA02J-102X	MG RESISTOR		
	R 277	NRSA02J-102X	MG RESISTOR		
	R 280	NRSA02J-102X	MG RESISTOR		
	R 281	NRSA02J-102X	MG RESISTOR		
	R 284	NRSA02J-102X	MG RESISTOR		
	R 288	NRSA02J-102X	MG RESISTOR		
	R 289	NRSA02J-102X	MG RESISTOR		
	R 290	NRSA02J-102X	MG RESISTOR		
	R 291	NRSA02J-122X	MG RESISTOR		
	R 292	NRSA02J-103X	MG RESISTOR		
	R 293	NRSA02J-102X	MG RESISTOR		
	R 294	NRSA02J-102X	MG RESISTOR		
	R 601	NRSA02J-164X	MG RESISTOR		
	R 602	NRSA02J-913X	MG RESISTOR		
	R 603	NRSA02J-104X	MG RESISTOR		
	R 604	NRSA02J-274X	MG RESISTOR		
	R 605	NRSA02J-333X	MG RESISTOR		
	R 606	NRSA02J-473X	MG RESISTOR		
	R 611	NRSA02J-752X	MG RESISTOR		
	R 612	NRSA02J-473X	MG RESISTOR		
	R 613	NRSA02J-752X	MG RESISTOR		

■ Electrical parts list (CD servo board)

Block No. 03

⚠	Item	Parts number	Parts name	Remarks	Area
	R 617	NRSA02J-752X	MG RESISTOR		
	R 618	NRSA02J-223X	MG RESISTOR		
	R 619	NRSA02J-223X	MG RESISTOR		
	R 620	NRSA02J-564X	MG RESISTOR		
	R 621	NRSA02J-564X	MG RESISTOR		
	R 631	NRSA02J-2R2X	MG RESISTOR		
	R 632	NRSA02J-100X	MG RESISTOR		
	R 634	NRSA02J-120X	MG RESISTOR		
	R 635	NRSA02J-121X	MG RESISTOR		
	R 636	NRSA02J-910X	MG RESISTOR		
	R 641	NRSA02J-154X	MG RESISTOR		
	R 642	NRSA02J-394X	MG RESISTOR		
	R 643	NRSA02J-683X	MG RESISTOR		
	R 644	NRSA02J-222X	MG RESISTOR		
	R 645	NRSA02J-222X	MG RESISTOR		
	R 646	NRSA02J-683X	MG RESISTOR		
	R 647	NRSA02J-203X	MG RESISTOR		
	R 648	NRSA02J-223X	MG RESISTOR		
	R 649	NRSA02J-223X	MG RESISTOR		
	R 651	NRSA02J-102X	MG RESISTOR		
	R 652	NRSA02J-102X	MG RESISTOR		
	R 653	NRSA02J-102X	MG RESISTOR		
	R 654	NRSA02J-101X	MG RESISTOR		
	R 655	NRSA02J-102X	MG RESISTOR		
	R 656	NRSA02J-102X	MG RESISTOR		
	R 657	NRSA02J-102X	MG RESISTOR		
	R 658	NRSA02J-102X	MG RESISTOR		
	R 659	NRSA02J-102X	MG RESISTOR		
	R 661	NRSA02J-102X	MG RESISTOR		
	R 662	NRSA02J-683X	MG RESISTOR		
	R 663	NRSA02J-124X	MG RESISTOR		
	R 664	NRSA02J-331X	MG RESISTOR		
	R 665	NRSA02J-271X	MG RESISTOR		
	R 666	NRSA02J-221X	MG RESISTOR		
	R 667	NRSA02J-4R7X	MG RESISTOR		
	R 668	NRSA02J-122X	MG RESISTOR		
	R 669	NRSA02J-562X	MG RESISTOR		
	R 670	NRSA02J-101X	MG RESISTOR		
	R 682	NRSA02J-102X	MG RESISTOR		
	R 683	NRSA02J-105X	MG RESISTOR		
	R 685	NRSA02J-683X	MG RESISTOR		
	R 686	NRSA02J-102X	MG RESISTOR		
	R 687	NRSA02J-102X	MG RESISTOR		
	R 688	NRSA02J-102X	MG RESISTOR		
	R 689	NRSA02J-103X	MG RESISTOR		
	R 691	NRSA02J-183X	MG RESISTOR		
	R 692	NRSA02J-183X	MG RESISTOR		
	R 693	NRSA02J-183X	MG RESISTOR		
	R 694	NRSA02J-183X	MG RESISTOR		
	R 695	NRSA02J-243X	MG RESISTOR		
	R 696	NRSA02J-243X	MG RESISTOR		
	R 697	NRSA02J-243X	MG RESISTOR		
	R 698	NRSA02J-243X	MG RESISTOR		
	R 701	NRSA02J-821X	MG RESISTOR		
	R 702	NRSA02J-821X	MG RESISTOR		
	R 703	NRSA02J-103X	MG RESISTOR		
	R 704	NRSA02J-103X	MG RESISTOR		
	R 705	NRSA02J-562X	MG RESISTOR		
	R 706	NRSA02J-202X	MG RESISTOR		
	R 707	NRSA02J-682X	MG RESISTOR		
	R 708	NRSA02J-101X	MG RESISTOR		
	R 709	NRSA02J-101X	MG RESISTOR		
	R 710	NRSA02J-221X	MG RESISTOR		
	R 801	NRSA02J-272X	MG RESISTOR		

⚠	Item	Parts number	Parts name	Remarks	Area
	R 802	NRSA02J-392X	MG RESISTOR		
	R 803	NRSA02J-912X	MG RESISTOR		
	R 804	NRSA02J-224X	MG RESISTOR		
	R 805	NRSA02J-133X	MG RESISTOR		
	R 806	NRSA02J-243X	MG RESISTOR		
	R 807	NRSA02J-122X	MG RESISTOR		
	R 808	NRSA02J-273X	MG RESISTOR		
	R 809	NRSA02J-122X	MG RESISTOR		
	R 812	NRSA02J-332X	MG RESISTOR		
	R 813	NRSA02J-152X	MG RESISTOR		
	R 831	NRSA02J-151X	MG RESISTOR		
	R 832	NRSA02J-103X	MG RESISTOR		
	R 842	NRSA02J-472X	MG RESISTOR		
	R 851	NRSA02J-102X	MG RESISTOR		
	R 852	NRSA02J-102X	MG RESISTOR		
	R 853	NRSA02J-102X	MG RESISTOR		
	R 854	NRSA02J-102X	MG RESISTOR		
	R 855	NRSA02J-102X	MG RESISTOR		
	R 856	NRSA02J-102X	MG RESISTOR		
	R 857	NRSA02J-272X	MG RESISTOR		
	R 859	NRSA02J-181X	MG RESISTOR		
	R 861	NRSA02J-102X	MG RESISTOR		
	R 862	NRSA02J-102X	MG RESISTOR		
	R 863	NRSA02J-102X	MG RESISTOR		
	R 864	NRSA02J-102X	MG RESISTOR		
	R 865	NRSA02J-102X	MG RESISTOR		
	R 866	NRSA02J-102X	MG RESISTOR		
	R 871	NRSA02J-223X	MG RESISTOR		
	R 872	NRSA02J-223X	MG RESISTOR		
	R 873	NRSA02J-223X	MG RESISTOR		
	R 874	NRSA02J-223X	MG RESISTOR		
	R 875	NRSA02J-223X	MG RESISTOR		
	R 876	NRSA02J-223X	MG RESISTOR		
	R 880	NRSA02J-102X	MG RESISTOR		
	R 881	NRSA02J-102X	MG RESISTOR		
	R 882	NRSA02J-102X	MG RESISTOR		
	R 883	NRSA02J-102X	MG RESISTOR		
	R 884	NRSA02J-102X	MG RESISTOR		
	R 885	NRSA02J-102X	MG RESISTOR		
	R 886	NRSA02J-102X	MG RESISTOR		
	R 887	NRSA02J-102X	MG RESISTOR		
	R 888	NRSA02J-223X	MG RESISTOR		
	R 889	NRSA02J-223X	MG RESISTOR		
	R 890	NRSA02J-223X	MG RESISTOR		
	R 891	NRSA02J-223X	MG RESISTOR		
	R 892	NRSA02J-223X	MG RESISTOR		
	R 893	NRSA02J-223X	MG RESISTOR		
	R 894	NRSA02J-223X	MG RESISTOR		
	R 895	NRSA02J-223X	MG RESISTOR		
	W 601	QUB220-07HPDT	SIN TWIST WIRE		
	X 251	QAX0360-001Z	CRYSTAL		
	X 651	QAX0413-001Z	CRYSTAL		

■ Electrical parts list (CD select switch board)

Block No. 04

⚠	Item	Parts number	Parts name	Remarks	Area
	CN804	QGB2016J1-07	CONNECTOR		
	SW 1	QSW0859-001	DETECT SWITCH		
	SW 2	QSW0859-001	DETECT SWITCH		
	SW 3	QSW0859-001	DETECT SWITCH		
	SW 4	QSW0859-001	DETECT SWITCH		
	SW 5	QSW0859-001	DETECT SWITCH		
	SW 6	QSW0859-001	DETECT SWITCH		

Packing materials and accessories parts list

Block No. M 4 M M
Block No. M 5 M M

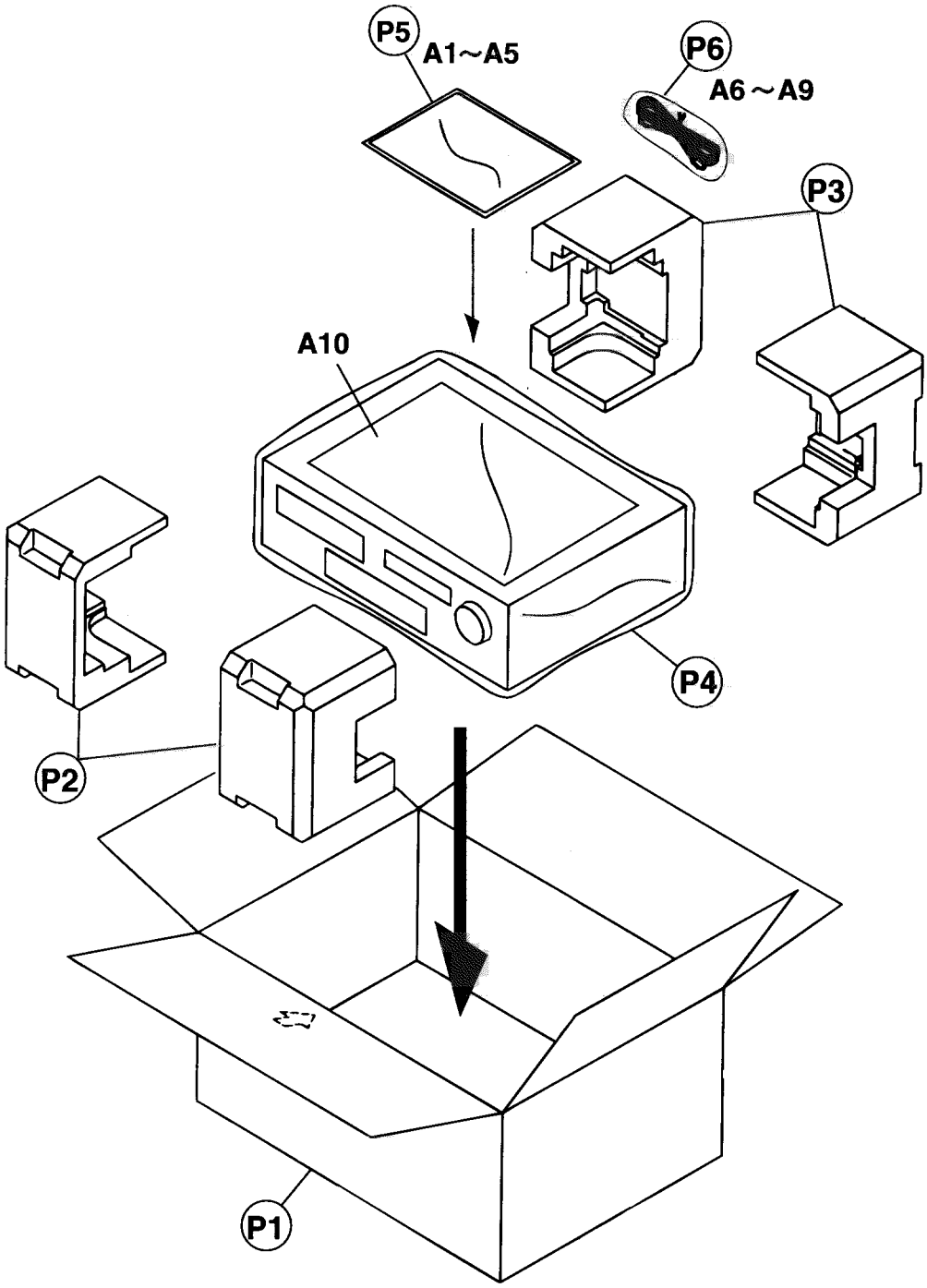

■ Packing parts list

Block No. M4MM

⚠	Item	Parts number	Parts name	Q'ty	Description	Area
	P 1	LV20728-002A	PACKING CASE	1		B,E,EN
		LV20728-001A	PACKING CASE	1		J,C
	P 2	LV20025-003A	CUSHION	1	FRONT	
	P 3	LV20025-002A	CUSHION	1	REAR	
	P 4	QPC06506515P	POLY BAG	1	FOR SET	
	P 5	QPC02503510P	POLY BAG	1	FOR INST	
	P 6	QPA01502505	ENVELOPE	1	WIRE BATTERY PL	

■ Accessories parts list

Block No. M5MM

⚠	Item	Parts number	Parts name	Q'ty	Description	Area
	A 1	LVT0452-005A	INST.BOOK	1	SWE,FIN,DAN	EN
		LVT0452-003A	INST.BOOK	1	GER,FRE,DUT	E,EN
		LVT0452-002B	INST.BOOK	1	FRE	C
		LVT0452-004A	INST.BOOK	1	SPA,ITA	E
		LVT0452-001B	INST.BOOK	1	ENG	J,C,B
	A 2	BT-51001-4	WARRANTY CARD	1		J
		BT-52004-1	WARRANTY CARD	1		C
		BT-54008-2	WARRANTY CARD	1		B,E,EN
	A 3	VNA3000-202	REGISTER CARD	1		B
		BT-51020-2	REGIST CARD	1		J
	A 4	YU20333	SAFETY INST.	1		J,C
		E43486-340B	SAFETY INST.	1		B
	A 5	BT-20071B	SERVICE NETWORK	1		C
	A 6	EWP805-001W	REMOTE WIRE	1		
	A 7	VMP0088-001JW	PIN CORD	1		
	A 8	RM-SXLR5000J	W.LESS REMOCON	1		J,C
		RM-SXLR5000E	W.LESS REMOCON	1		B,E,EN
	A 9	----------	BATTERY	1	FOR REMOCON	
	A 10	LV32110-001A	CAUTION SHEET	1		

XL-R5000BK

VICTOR COMPANY OF JAPAN, LIMITED
AUDIO DIVISION,10-1,1Chome,Ohwatari-machi,maebashi-city,371-8543,Japan

No.20824

Printed in Japan
200004(O)

JVC

SERVICE MANUAL

CD/CDR MULTIPLE COMPACT DISC RECORDER

XL-R5000BK

Supplement

Area Suffix

J	U.S.A.
C	Canada
B	U.K.
E	Continental Europe
EN	Northern Europe

With sincere apology for that the following items have been left off the previously issued Service Manual (No. 20824) for the XL-R5000BK, we issue this supplement to add those items to the Service Manual.

1. CD-R unit's tray and belt replacement procedure
2. XL-R5000BK check-up procedure
3. Power supply section block diagram

No.20824B
Aug. 2000

■ CDR Unit Tray Replacement Procedure

Refer to the separate figure.
When removing the tray:

1. Make sure that the pickup is located in the innermost position (usual position).
   If the pickup is out of the innermost position, locate it in the innermost position with care not to touch the lens.
2. While turning the gear drive (③ in the figure) clockwise to lower the mechanism, draw the tray towards the front side.
   Pull out the tray to the full extent (as shown in the figure).
3. Press the lever (① in the figure) in the direction of the arrow (leftward).
4. Holding the lever (①) in the status of the above step ③ , raise the lever (② in the figure) in the direction of the arrow (upward).
5. Pull the tray out of the CDR unit with the levers held in the above-mentioned status.

When setting a new tray:

① Slide the slide gear (④ in the figure) rightwards to lower the mechanism before inserting a new tray.
② Insert a new tray into the CDR unit front the front side.
③ Going through the procedure for removing the tray in the reverse order, turn the gear drive counterclockwise to raise the mechanism upwards and check to see if it is in the topmost position.

That is all for the tray replacement procedure.

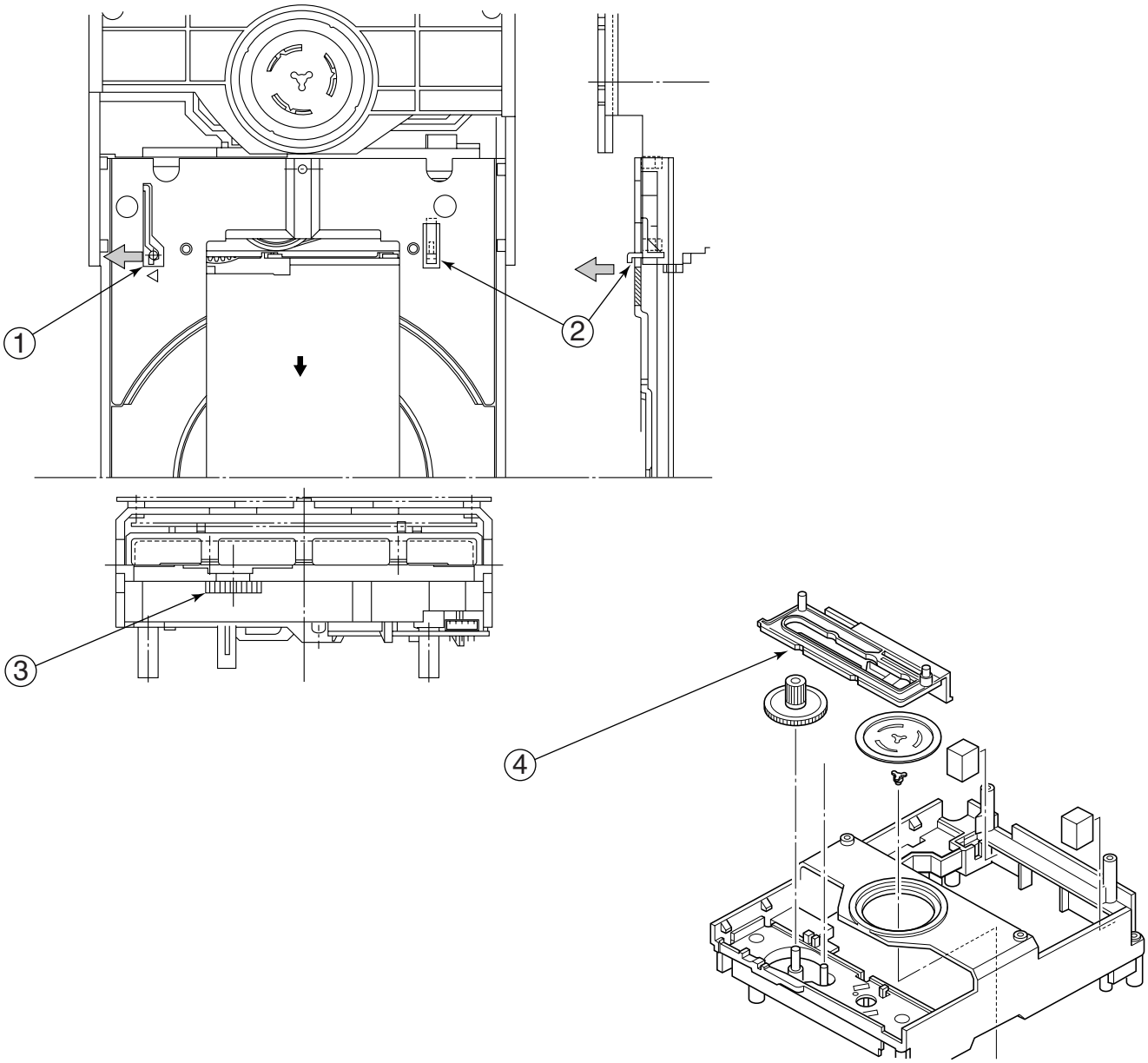

■ CRD-Unit Belt Replacement Procedure

Refer to the figure below.

1. Remove the tray following to the tray removal procedure.
2. Remove the belt with the tweezers or the like.
3. Wipe over the belt creep (Ⓐ in the figure) of the pulley gear (① in the figure) and pulley motor (② in the figure) with alcohol.
4. Engage a new belt with ① first and ② next by use of tweezers or the like.
5. Make sure that the belt is neither twisted nor soiled with grease, etc.
6. Restore the tray to the original position.

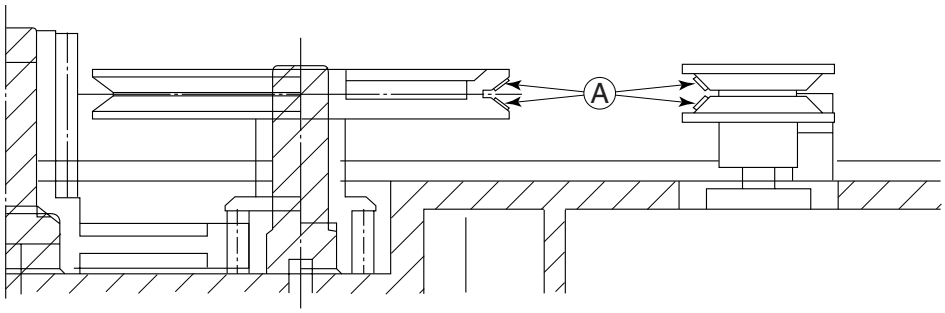

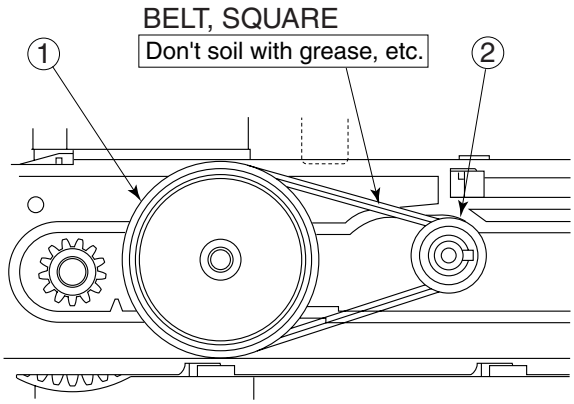

■ How to check for 3CD and CD-R

1. Special tools and CDR & CDRW Disc.

- CD TEST DISC:CTS-1000
- CD-R for Audio
- CD-RW for Audio

Note: 1. Be sure to use general audio CD-R and CD-RW disks available on the market for this set.
2. This set is incapable of playing any CD-R or CD-RW disk for the personal computer.
3. The CD-RW disk can be played only by the player compatible with the CD-RW disk.
4. The CD-R disk that has not been finalized after writing can be played by the CD-R unit only.

■ How to check up the CD-R unit whether it is normal (OK) or defective (NG).

* For checking up the CD-R unit for normal or abnormal status, open the Service Menu.

1. How to open the Service Menu.

1) Press both the DIGITAL key and POWER key simultaneously.
2) Press the MENU key.
The following menu items appear one after another on the FL Display.

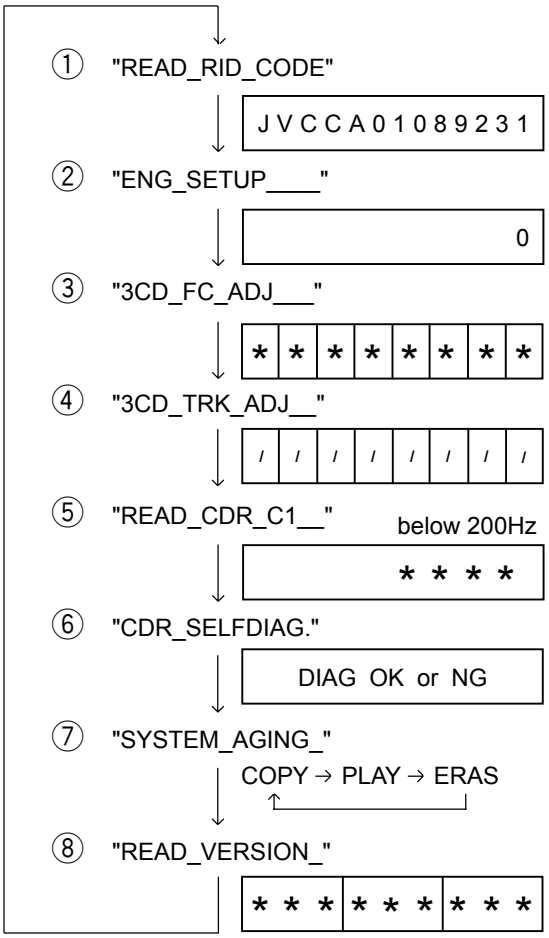

- The menu items from ① to ⑧ can be repeatedly shown on the display by the JOG dial or the FWD/BWD key on the remote controller.
- If the SET key is pressed while a menu item is shown on the display, the setting value of the item appears on the display.
- The menu item ⑥ shows the self-diagnosing result of the CD-R unit. After the self-diagnosing result appears on the display, quit the Service Menu by turning off the set, otherwise you cannot access the further menu items.
- For details of each menu item, refer to the next page.

⟶ If "DIAG NG" message appears, replace the CD-R unit with new one.

■ Explanation of Service menu

1. READ RID CODE

When this menu item is executed, the RID code is read out and it is shown by the FL tube for 5 seconds. This selection is automatically cleared after the 5-second display.

Example of display: JVCCA01089231

Manufacturer code: JVC

Type code: CA01

Unique No.: 089231

2. ENG SETUP

Explanation of this item is omitted because of the confidential function.

3. 3CD FC ADJ (3CD focus automatic adjustment value readout) (000000F7)

When this menu item is executed, the 3CD unit focus automatic adjustment value (hexadecimal number in six figures) is displayed by the FL tube for 3 seconds. This selection is automatically cleared after the 3-second display. When the set fails in reading out the 3CD unit focus automatic adjustment value, a message "NG" is shown for the value to be read.

4. 3CD TRK ADJ (3CD tracking automatic adjustment value readout) (00000FA)

When this menu item is executed, the 3CD unit tracking automatic adjustment value (hexadecimal number in six figures) is displayed by the FL tube for 3 seconds. This selection is automatically cleared after the 3-second display. When the set fails in reading out the 3CD unit tracking automatic adjustment value, a message "NG" is shown for the value to be read.

5. READ CDR C1 (CDR C1 error rate readout)

When this menu item is executed, the CDR is set to the play mode with display of the C1 error rate. To escape from this menu item, switch off the set.

6. CDR SELFDIAG (CDR self-diagnosing)

When this menu item is executed, the set carries out self-diagnosing of the CDR. When nothing wrong is detected by the self-diagnosis, a message "DIAG OK" appears on the display. To quit this self-diagnosing mode, switch off the set.

7. SYSTEM AGING (Running operation)

When this menu item is executed, the set automatically starts the following running operation. For executing this item, it is required to set a blank CD-RW disk in the CDR beforehand. The time required for a running operation or number of times of pick movement can be controlled by changing the data written on the disc set on the current tray of the 3CD.

(When the running operation starts without disk, "000CD 1ACOPY" is shown on the display.)

↓
One time disk dubbing (COPY)
↓
Play of CDR until readout is complete (PLAY)
↓
Erasure of CDR from disk (ERAS)

If the set receives an effective input from the key, remote controller or DCS, it immediately stops the running operation. If the running operation is suspended by the STOP key or because of an error, the following message is continuously displayed until the set is switched off.

Classification of the unit in which an error breaks out	Error code (hexadecimal number in two figures)	Operation executed last	Number of execution times (4-digits decimal number)
CDorCDR	000CD	COPYorPLAYorERAS	1ACOPY

8. READ VERSION (Version number readout)

When this menu item is executed, version numbers of the syscon, CDR farm and 3CD farm are shown by the FL tube for 5 seconds. This selection is automatically cleared after the 5-second display.

Syscon version No. (in 3 digits)	CDR farm version No. (in 3 digits)	3CD farm version No. (in 3 digits)

Each version No. is set apart from the other(s) by a space.

A 3-digit number is shown as *.**. The last two digits are shown in the decimal places.

When the set fails in reading out a version number, "000" (three zeros) is shown for the version number to be read.

■ Check mode Method

1. Check Mode

The Check Mode is prepared for checking timer operation and display with the FL tube.

2. Check mode setup method

Setup: In the status that the set is turned off, press the POWER key together with the DISPLAY key to turn on the set.

Cancel: Shift the mode to the backup mode, or press the POWER key together with the DISPLAY key to turn on the set again for resetting.

3. Operation

The set is switched on and all segments of the FL tube go on. Adjust the clock so that its indication gains one minute per one real second.

If the set is operated anyhow other than for check mode canceling, the FL indication reverts to the normal status. After that, the set continues normal operation except the speeded up clock operation.

■ Clearing all settings

This operation clears all of settings and restore them to the default values, for example, settings of the menu items are restored to the respective default values or registered programs are cleared by this operation. In short, this operation restores every setting to the initial status on shipment.

- In the status that the set is switched off, press the POWER key together with the LINE key to turn on the set.

Items subject to this clearing/resetting operation

Clearance of clock setting AM12:00

Clearance of timer setting OFF

Clearance of program for playing back programs OFF

Clearance of registered listening edit and program edit programs OFF

Switching off repeat setting OFF

Clearance of child lock Free

Setting the current unit for 3 CD's and DNO (DISK NO) for the tray 1

Resetting the 3CD play mode to the normal mode

Switching off pitch control setting OFF

Setting the recording source selection to 3CD digital recording

Setting the dubbing speed double

Switching on the AUTO TRK setting OFF

Switching on the TRK space OFF

Switching on the FS CON setting OFF

Switching on the DIG (Digtal) IN SYNC setting OFF

Block diagram

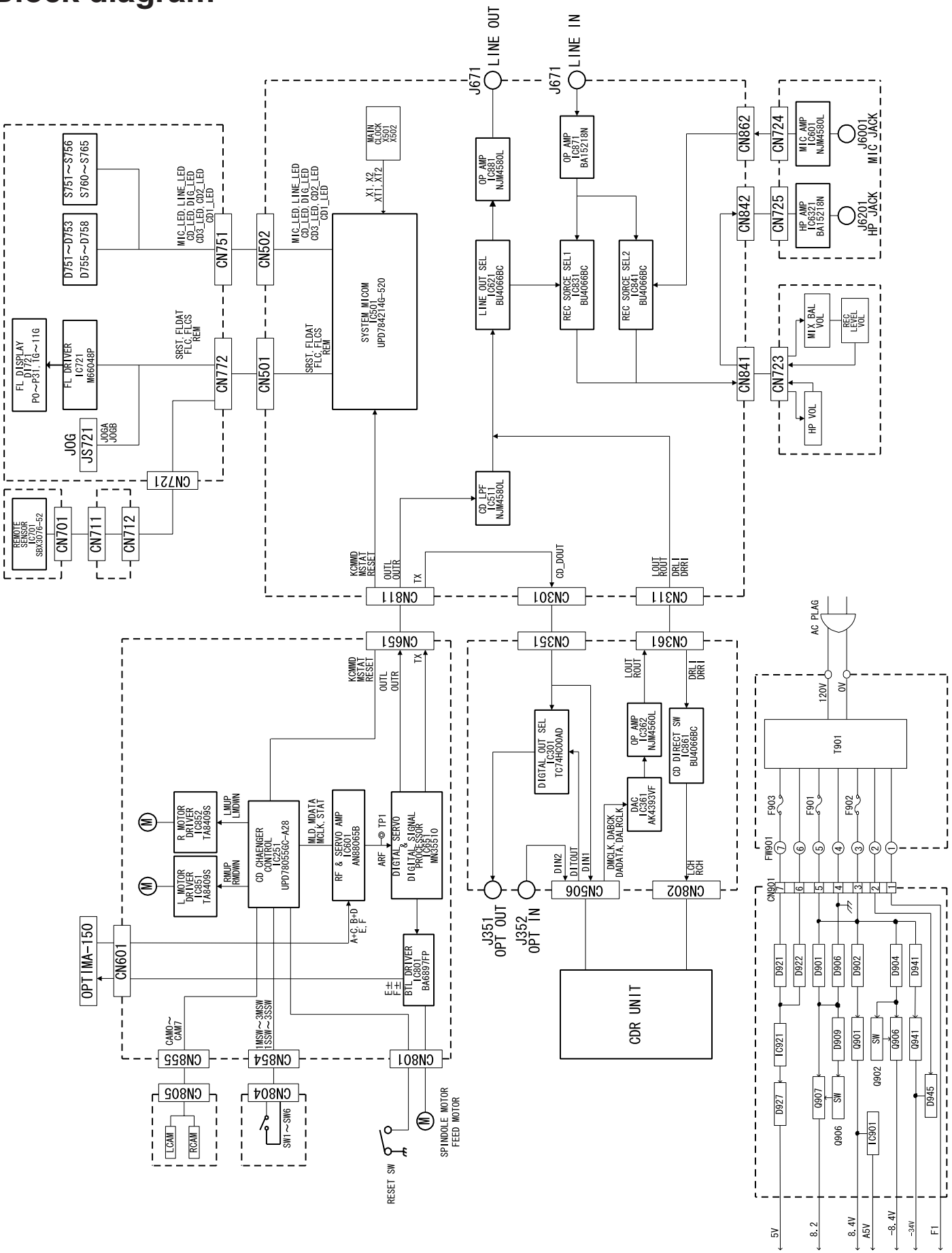

VICTOR COMPANY OF JAPAN, LIMITED
AUDIO & COMMUNICATION BUSINESS DIVISION
PERSONAL & MOBILE NETWORK B.U 10-1,1Chome,Ohwatari-machi,Maebashi-city,371-8543,Japan

No.20824B

Printed in Japan
200008(O)

Block diagram

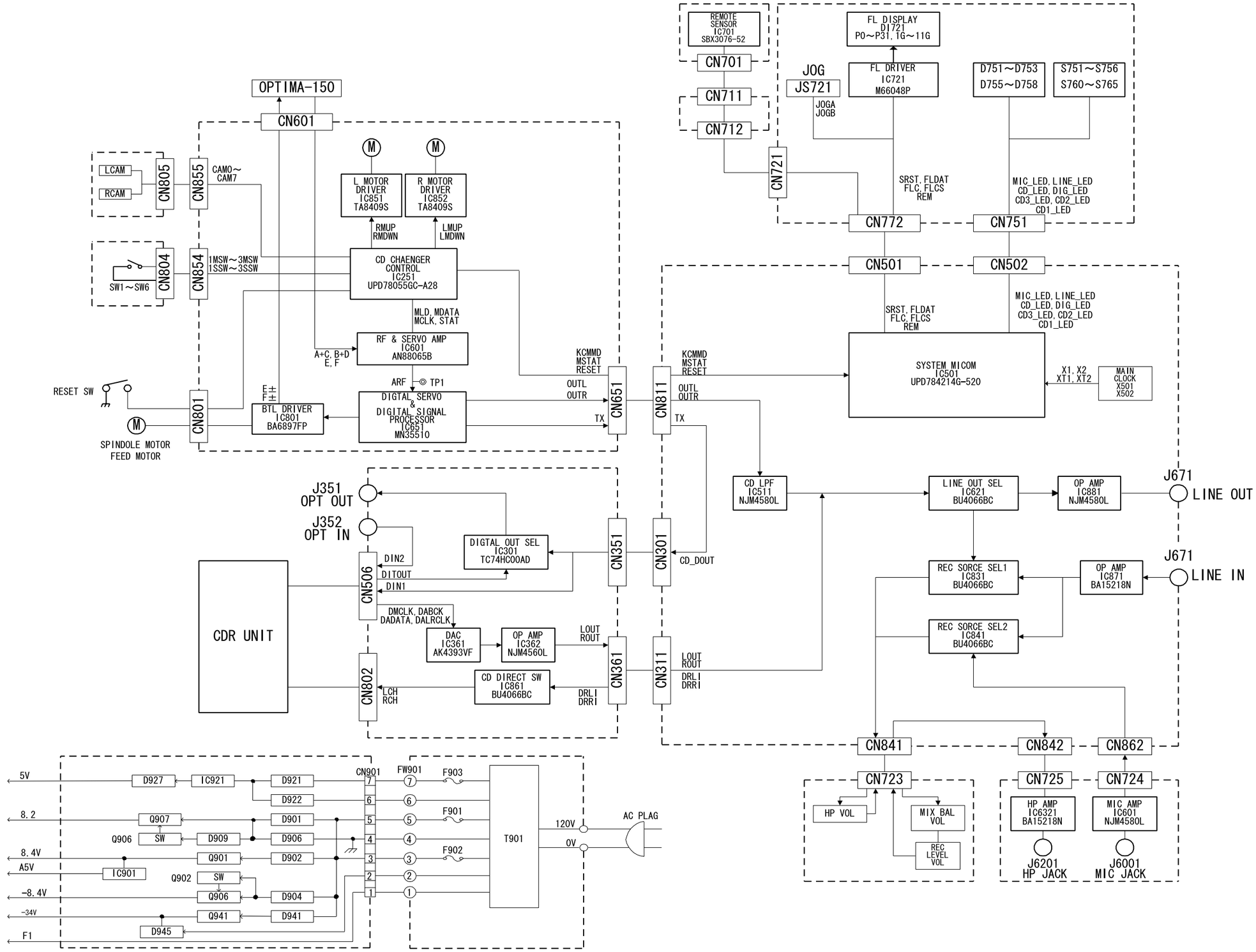

Standard schematic diagrams

■ System contorol circuit

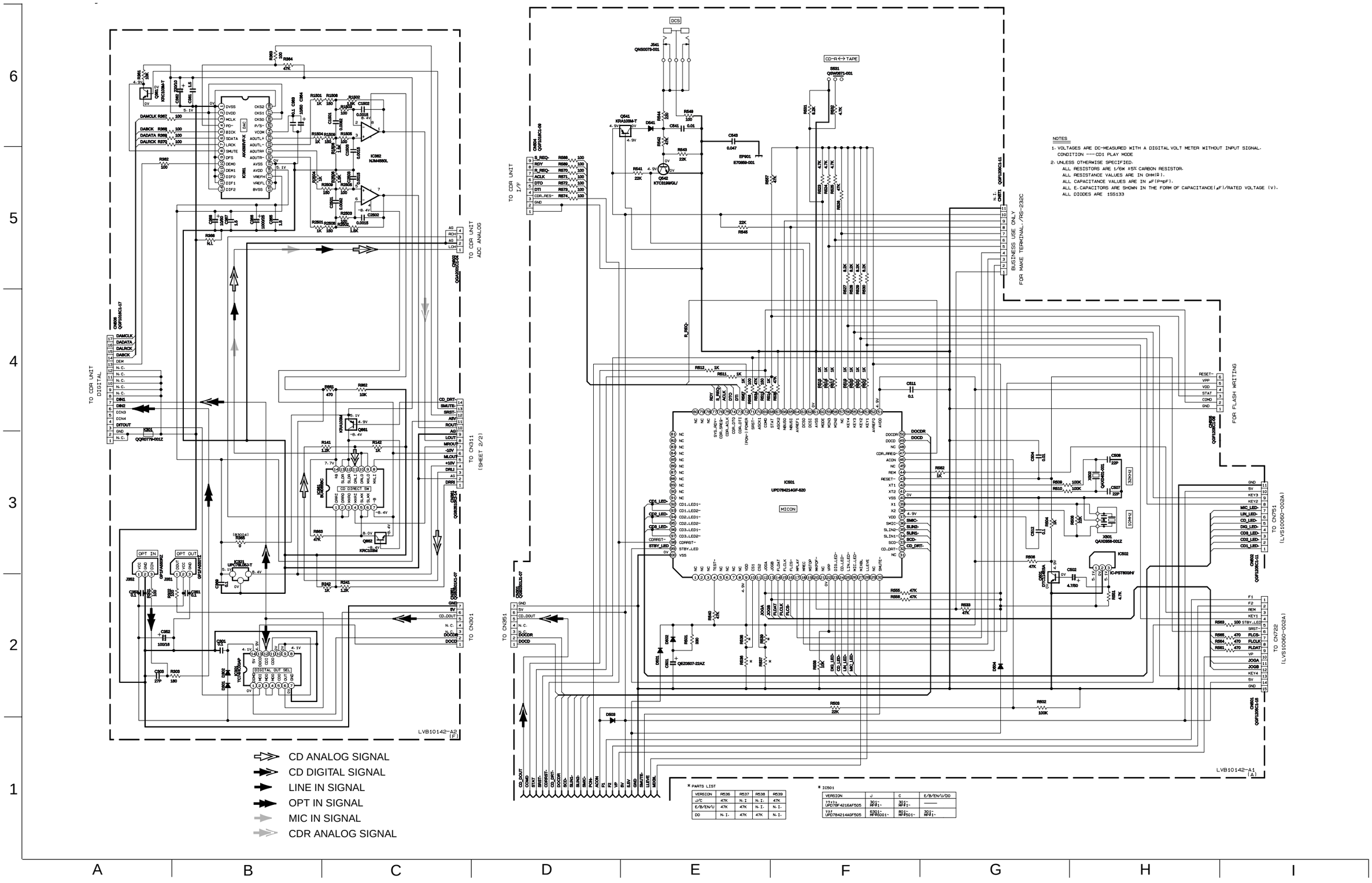

NOTES

1. VOLTAGES ARE DC-MEASURED WITH A DIGITAL VOLT METER WITHOUT INPUT SIGNAL.
   CONDITION ---- CD1 PLAY MODE
2. UNLESS OTHERWISE SPECIFIED.
   ALL RESISTORS ARE 1/6W ±5% CARBON RESISTOR.
   ALL RESISTANCE VALUES ARE IN OHM(Ω).
   ALL CAPACITANCE VALUES ARE IN μF(P=pF).
   ALL E.CAPACITORS ARE SHOWN IN THE FORM OF CAPACITANCE(μF)/RATED VOLTAGE (V).
   ALL DIODES ARE 1SS133

* PARTS LIST

VERSION	R536	R537	R538	R539
μ/C	47K	N. I	N. I.	47K
E/B/EN/U	47K	47K	N. I.	N. I.
DO	N. I.	47K	47K	N. I.

* IC501

VERSION	J	C	E/B/EN/U/DO
1st. UPD78F4216AF505	301- HP41-	301- HP41-	——
2nd UPD784214AGF505	501- HP6501-	501- HP501-	301- HP41-

■ Regulator & optical in/out circuit

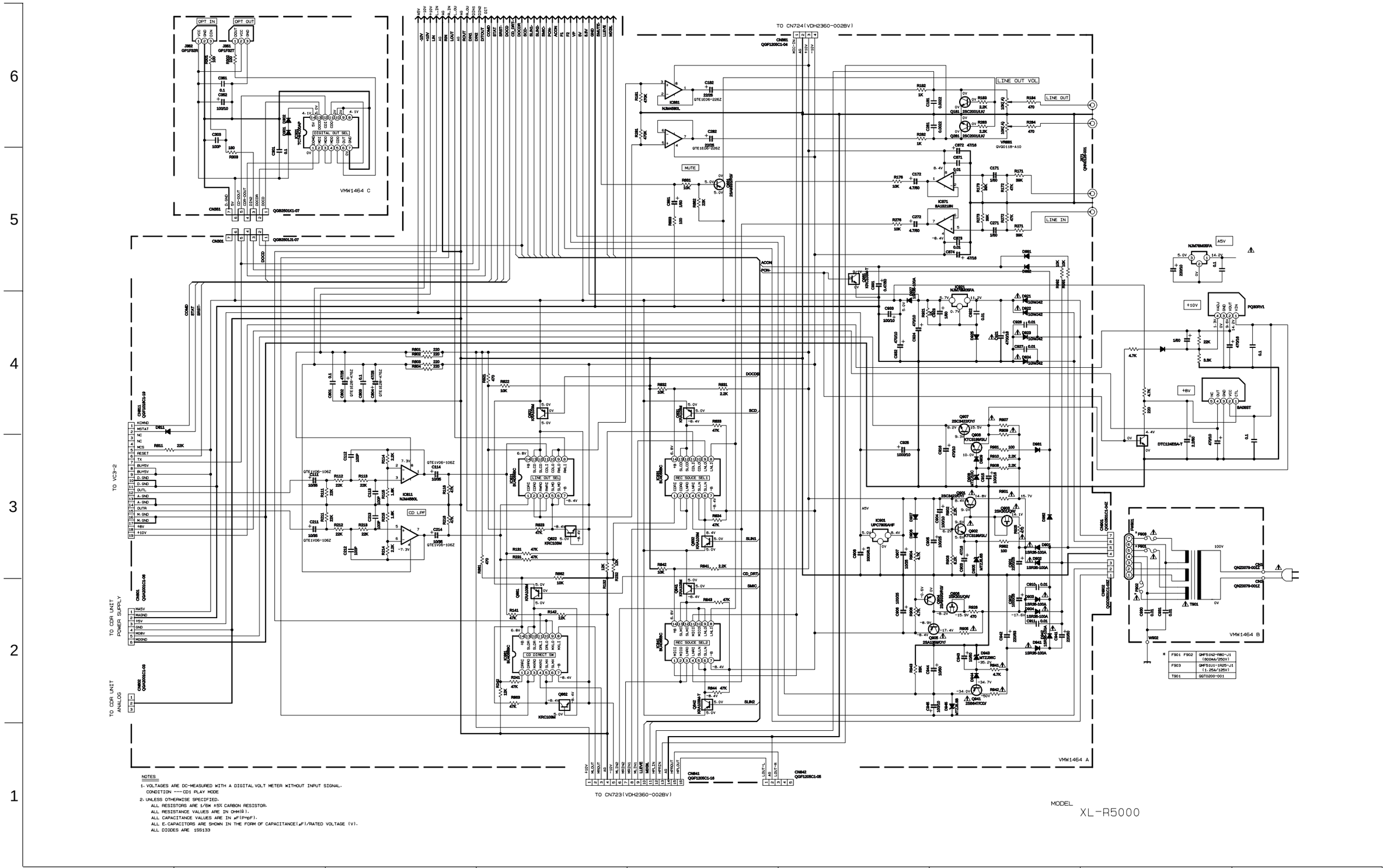

NOTES

1. VOLTAGES ARE DC-MEASURED WITH A DIGITAL VOLT METER WITHOUT INPUT SIGNAL.
   CONDITION ---- CD1 PLAY MODE
2. UNLESS OTHERWISE SPECIFIED.
   ALL RESISTORS ARE 1/6W ±5% CARBON RESISTOR.
   ALL RESISTANCE VALUES ARE IN OHM(Ω).
   ALL CAPACITANCE VALUES ARE IN μF(PMμF).
   ALL E-CAPACITORS ARE SHOWN IN THE FORM OF CAPACITANCE(μF)/RATED VOLTAGE (V).
   ALL DIODES ARE 1SS133

*	F901 F902	QMF51N2-R80-J1 (800mA/250V)
	F903	QMF51U1-1R25-J1 (1.25A/125V)
	T901	QGT0200-001

■ Display circuit

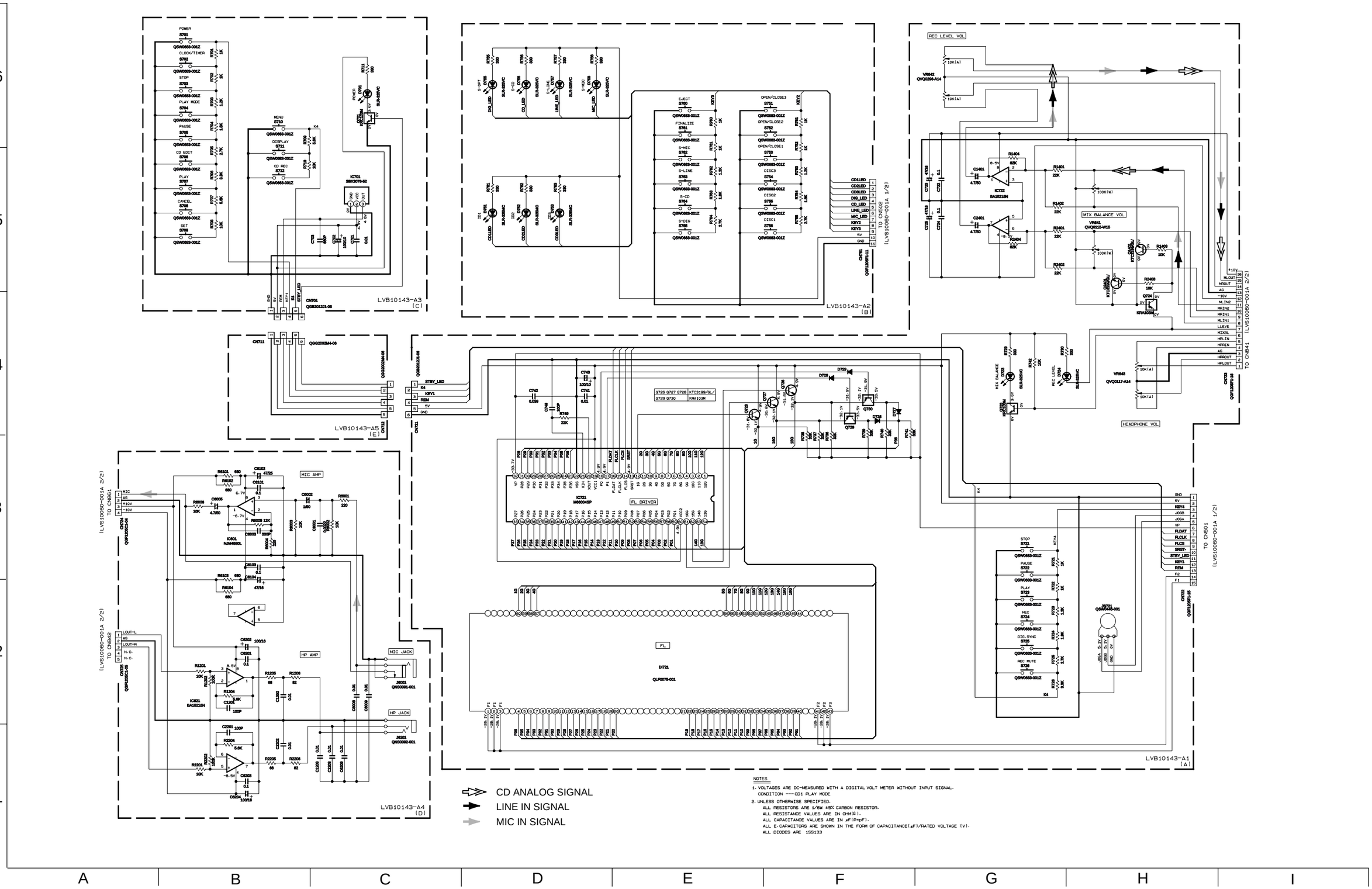

NOTES

1. VOLTAGES ARE DC-MEASURED WITH A DIGITAL VOLT METER WITHOUT INPUT SIGNAL.
   CONDITION ---CD1 PLAY MODE
2. UNLESS OTHERWISE SPECIFIED.
   ALL RESISTORS ARE 1/6W ±5% CARBON RESISTOR.
   ALL RESISTANCE VALUES ARE IN OHM(Ω).
   ALL CAPACITANCE VALUES ARE IN μF(P=pF).
   ALL E-CAPACITORS ARE SHOWN IN THE FORM OF CAPACITANCE(μF)/RATED VOLTAGE (V).
   ALL DIODES ARE 1SS133

■ CD servo circuit

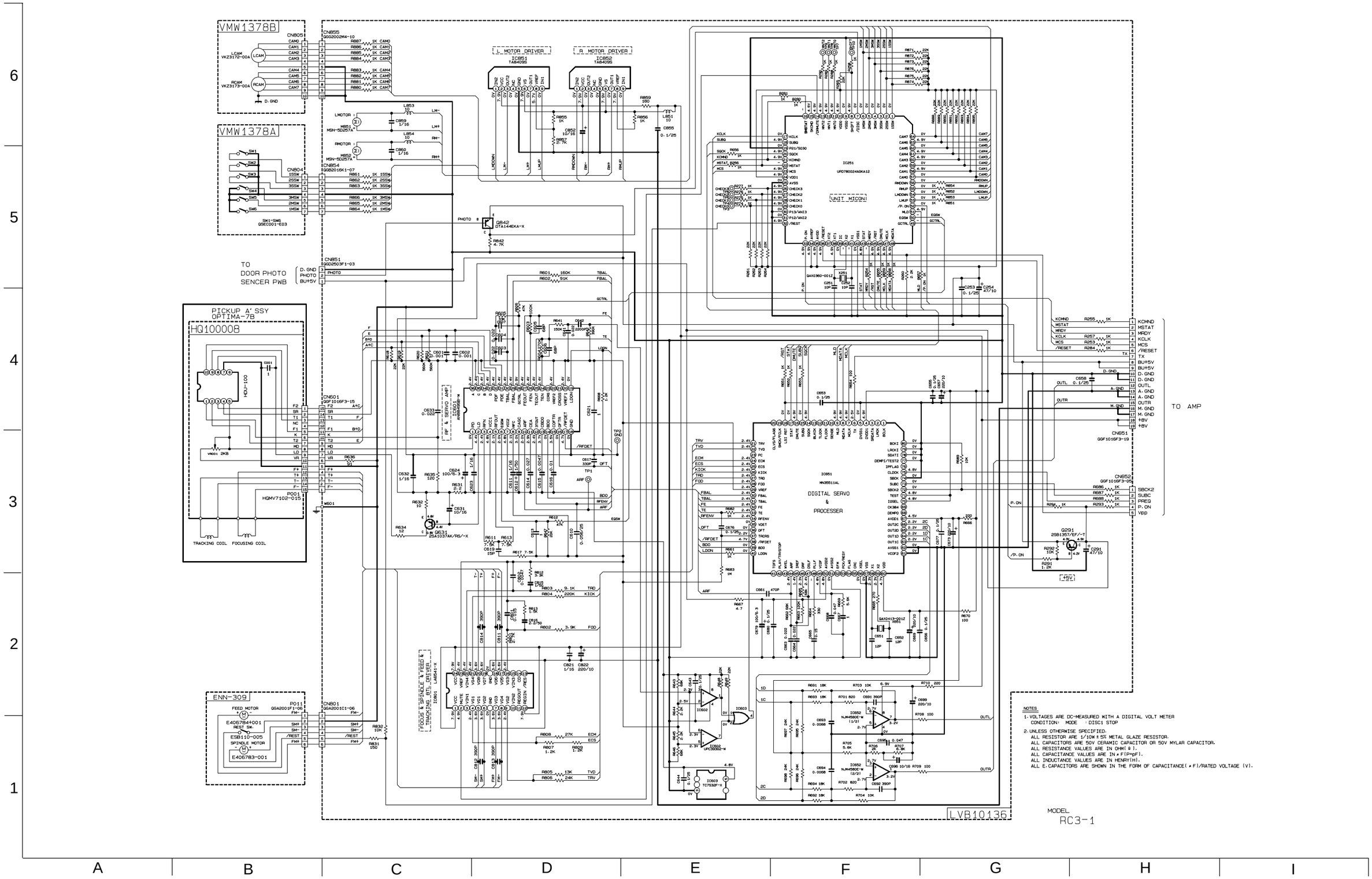

Printed circuit boards

■Main board

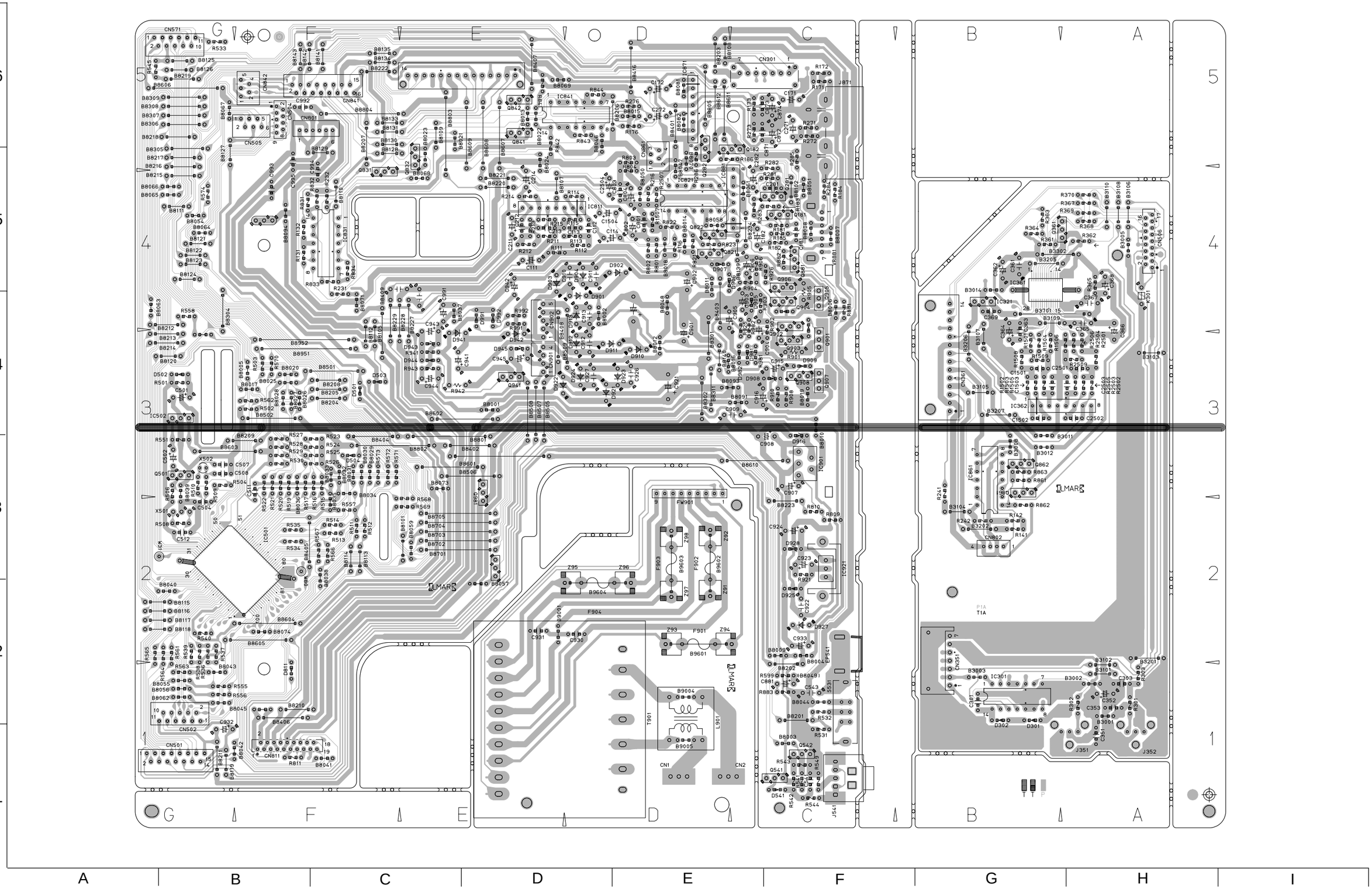

■ Display board

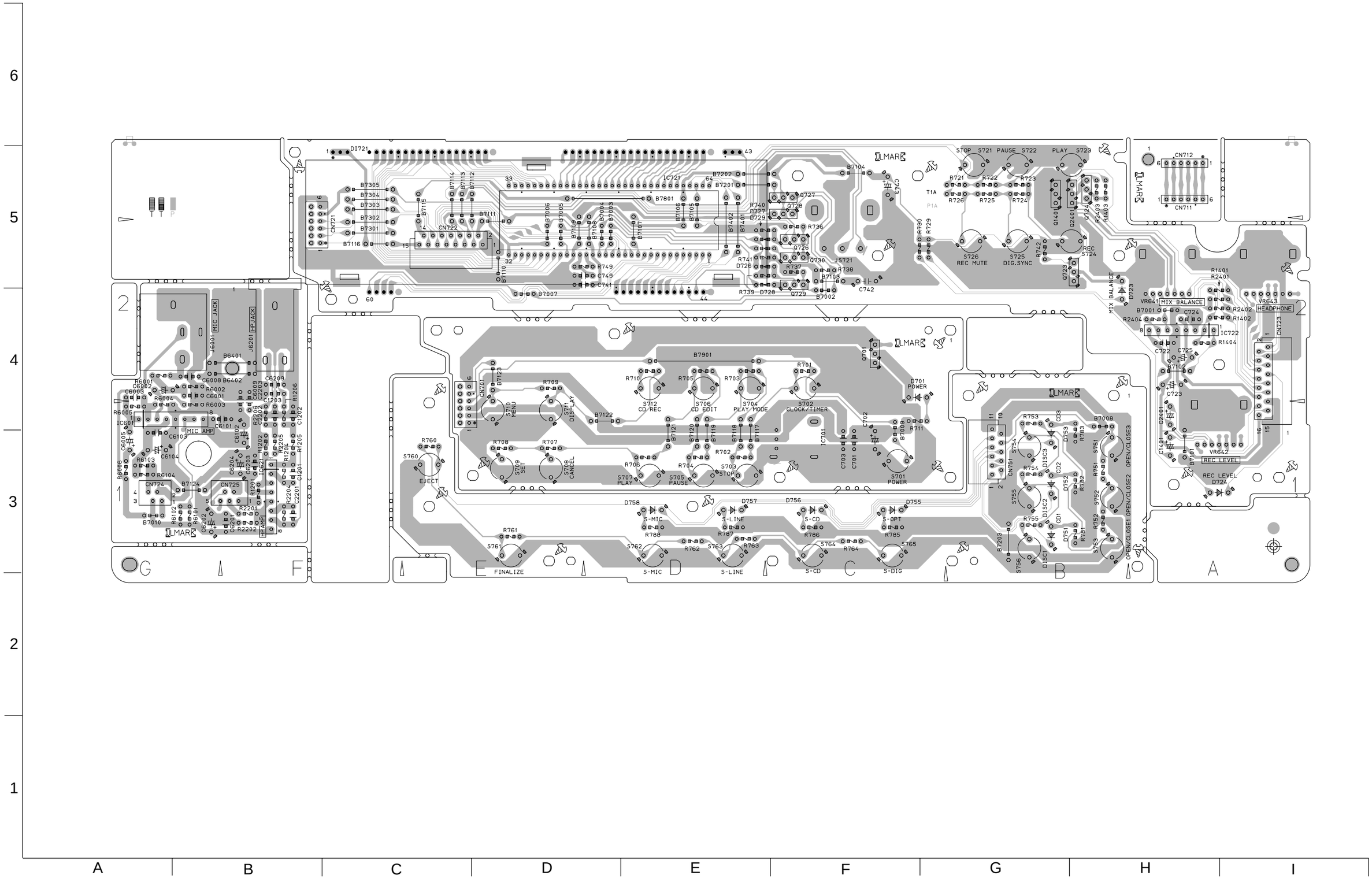

■CD servo control board