GRAPHIC EQUALIZER

GE-55

SERVICE MANUAL

KENWOOD

TRIO-KENWOOD CORPORATION

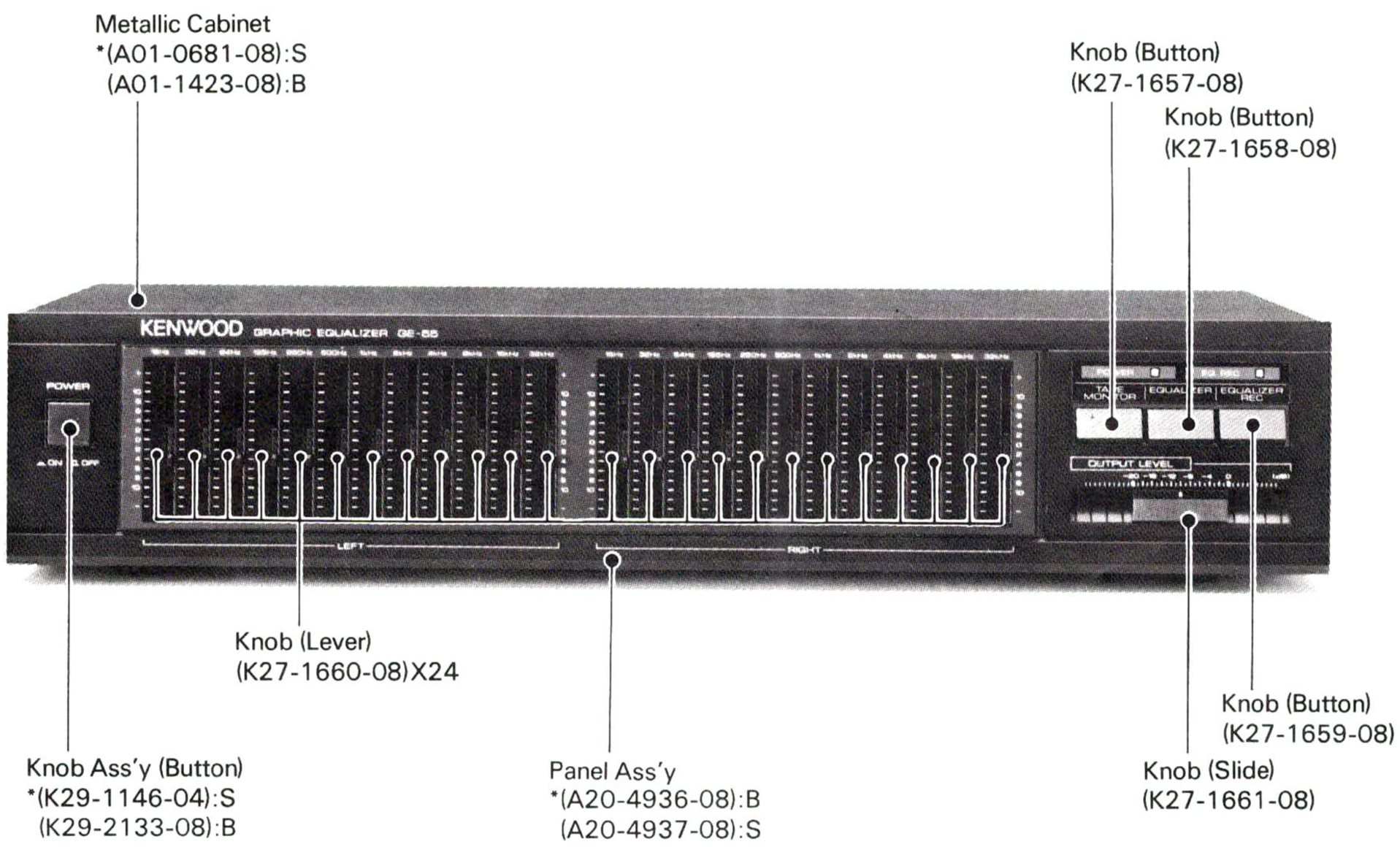

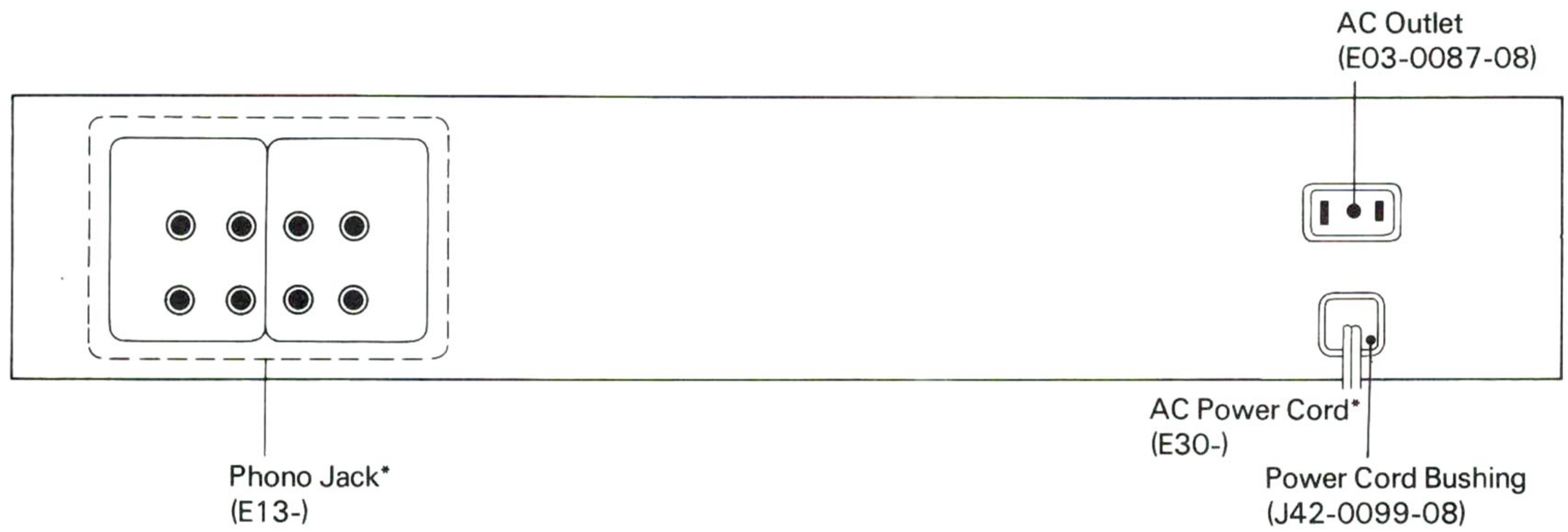

Refer to parts list on page 6.
Photo is black version.
S: silver version
B: black version

www.hifiengine.com

DISASSEMBLY FOR REPAIR

Function switch PC Board Removal

1. Remove the LED PC board from the panel assembly ❶.
2. Push on and remove the TAPE MONI/EQ REC knob from the rear side of the panel ❷.
3. Remove the two screws hidden in the knob from the panel assembly, thus releasing the function switch PC board ❸.

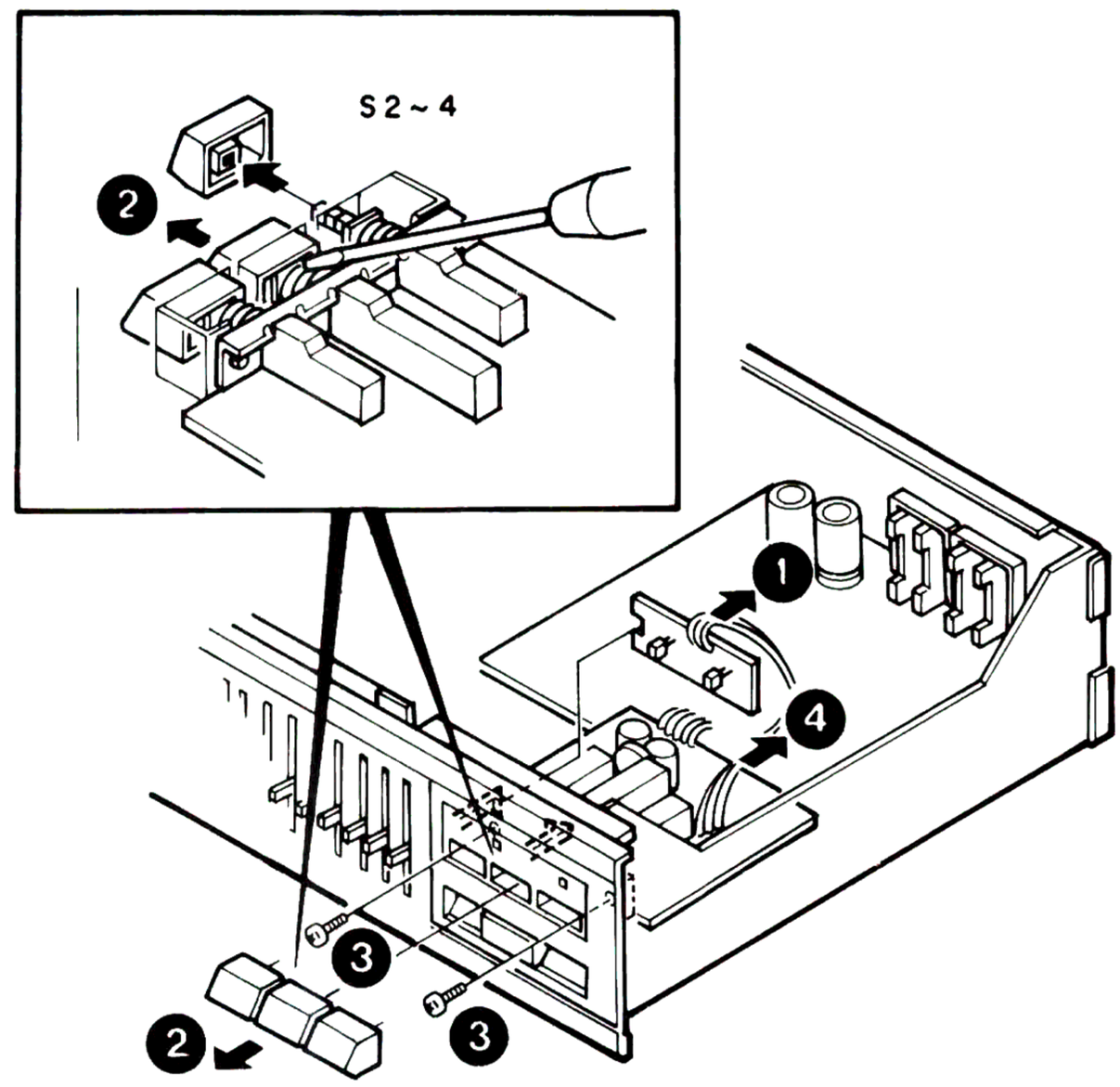

Front Panel Assembly Removal

1. Remove the function switch and LED PC boards, releasing the right side of the panel assembly ❹.
2. Remove the screws (two on the upper side, one on the lower side) ❺.
3. Lift the right side of the panel assembly, and remove it from the claws at the right side of the chassis ❻.
4. While carefully pulling the panel assembly out, release it from the chassis center claws ❼.
5. While turning the panel assembly down towards you, move it upwards, and release it from the chassis left side claws ❽.

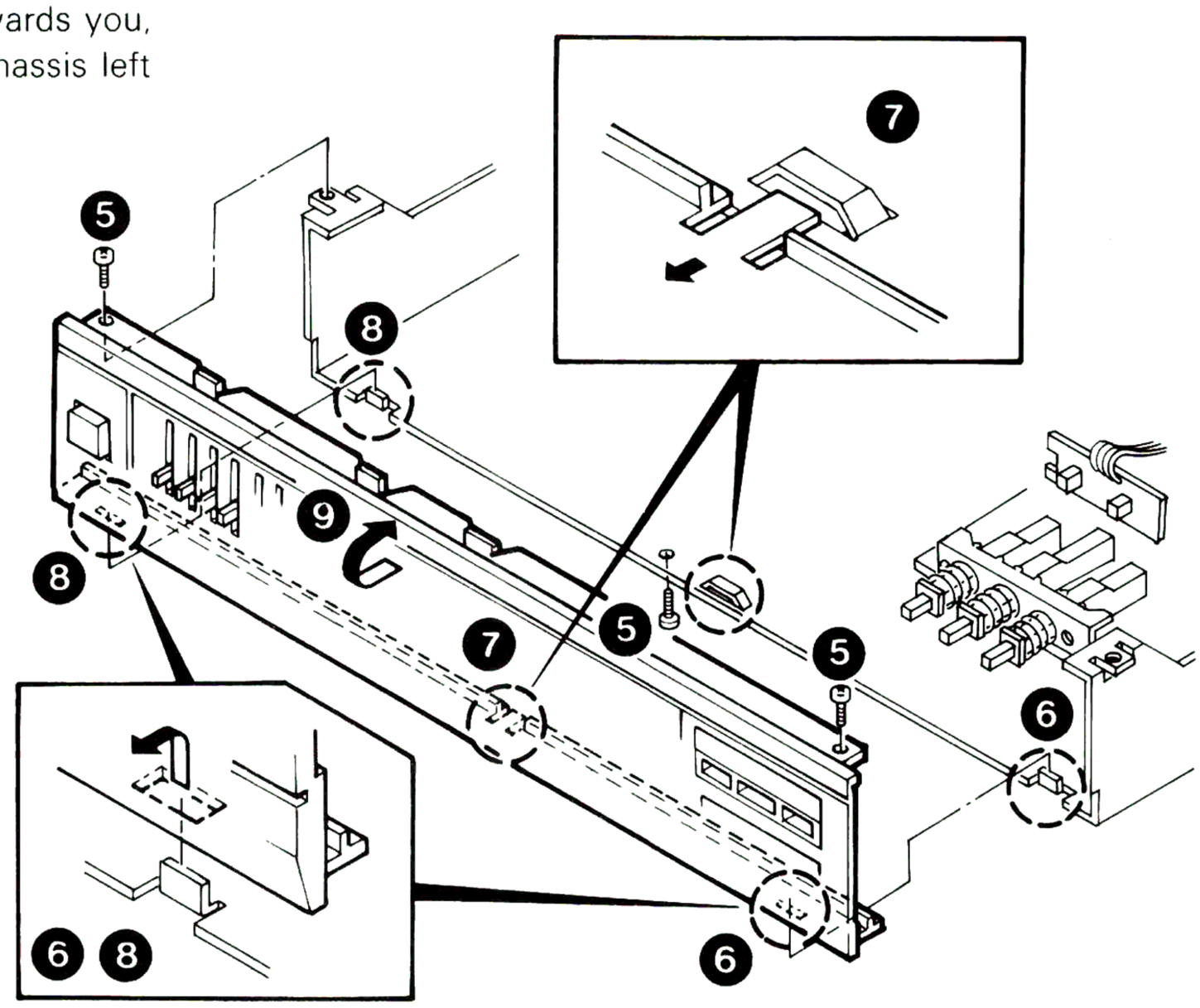

www.hifiengine.com

DISASSEMBLY FOR REPAIR

EQ VOL PC Board Removal

1. Remove the front panel assembly from the chassis ⑨.
2. Remove the function switch and LED PC boards, and turn the panel assembly upside down ⑩.
3. Each EQ VOL PC board is fixed to the panel assembly with four claws ⑪.
4. While pushing the lower side claws of the panel, move the EQ VOL PC board towards the upper side of the panel. Take the lower side of the EQ VOL PC board off the panel assembly groove, and release the EQ VOL PC board from the upper side claws of the panel. The EQ VOL PC board will then come off ⑫.

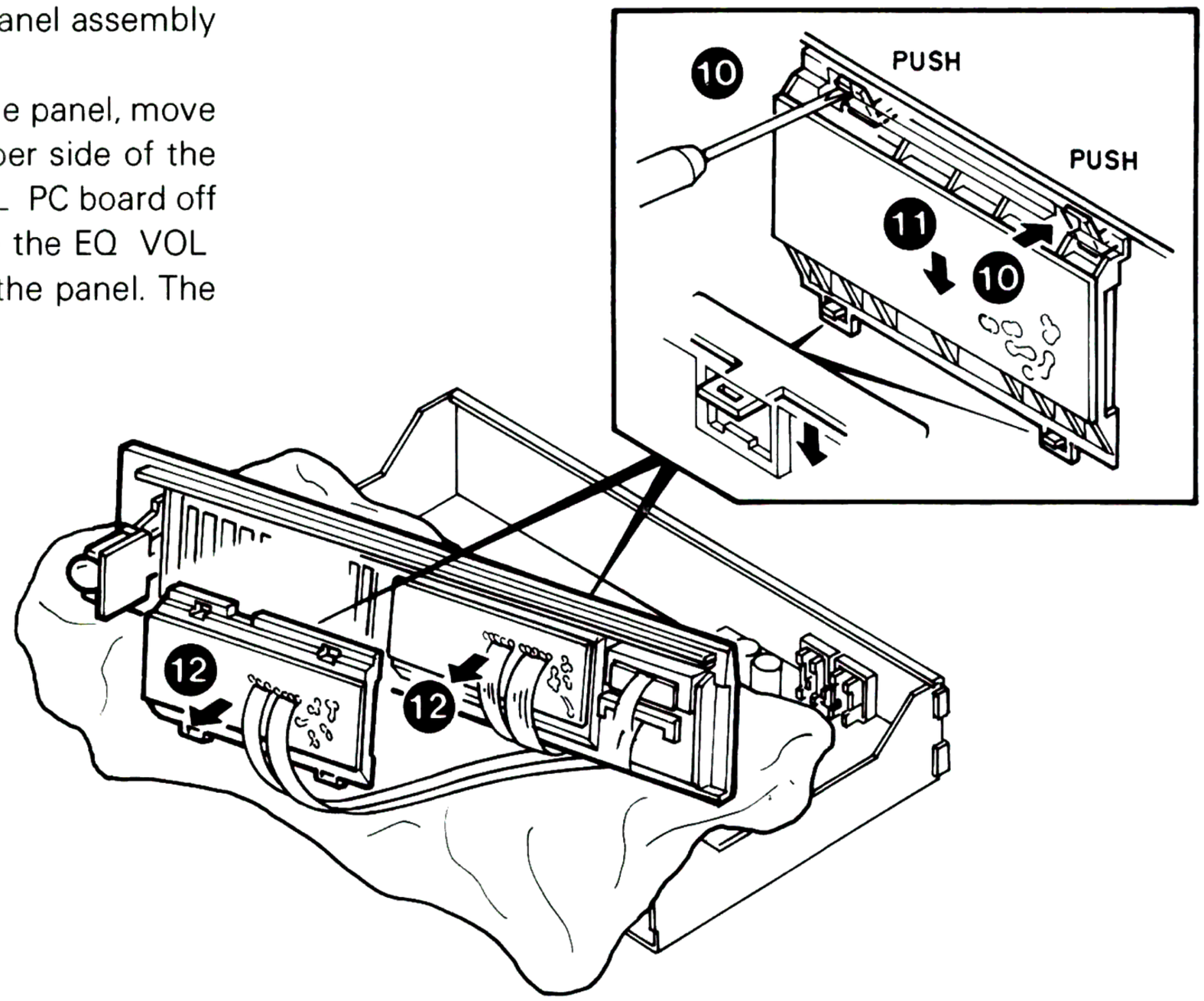

www.hifiengine.com

BLOCK LEVEL DIAGRAM

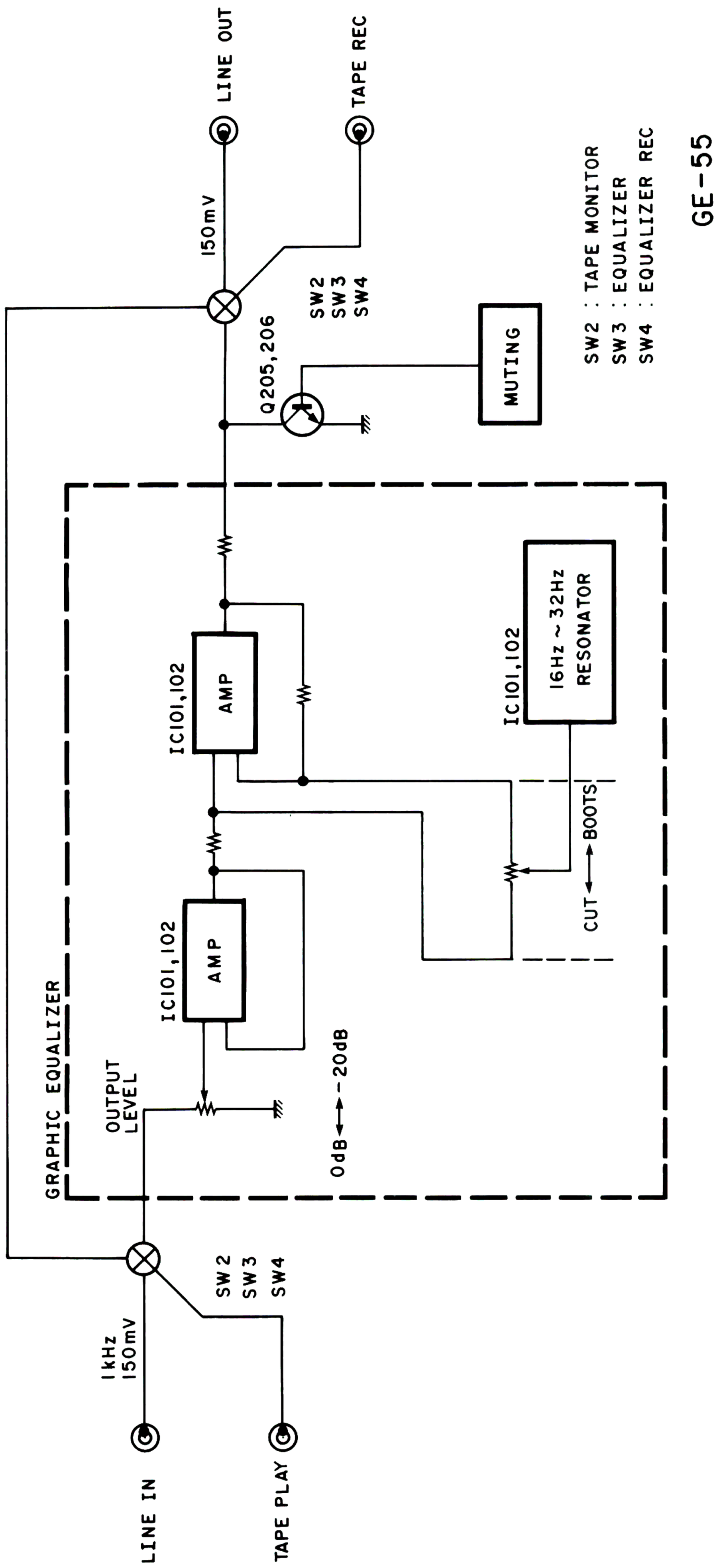

PC BOARD

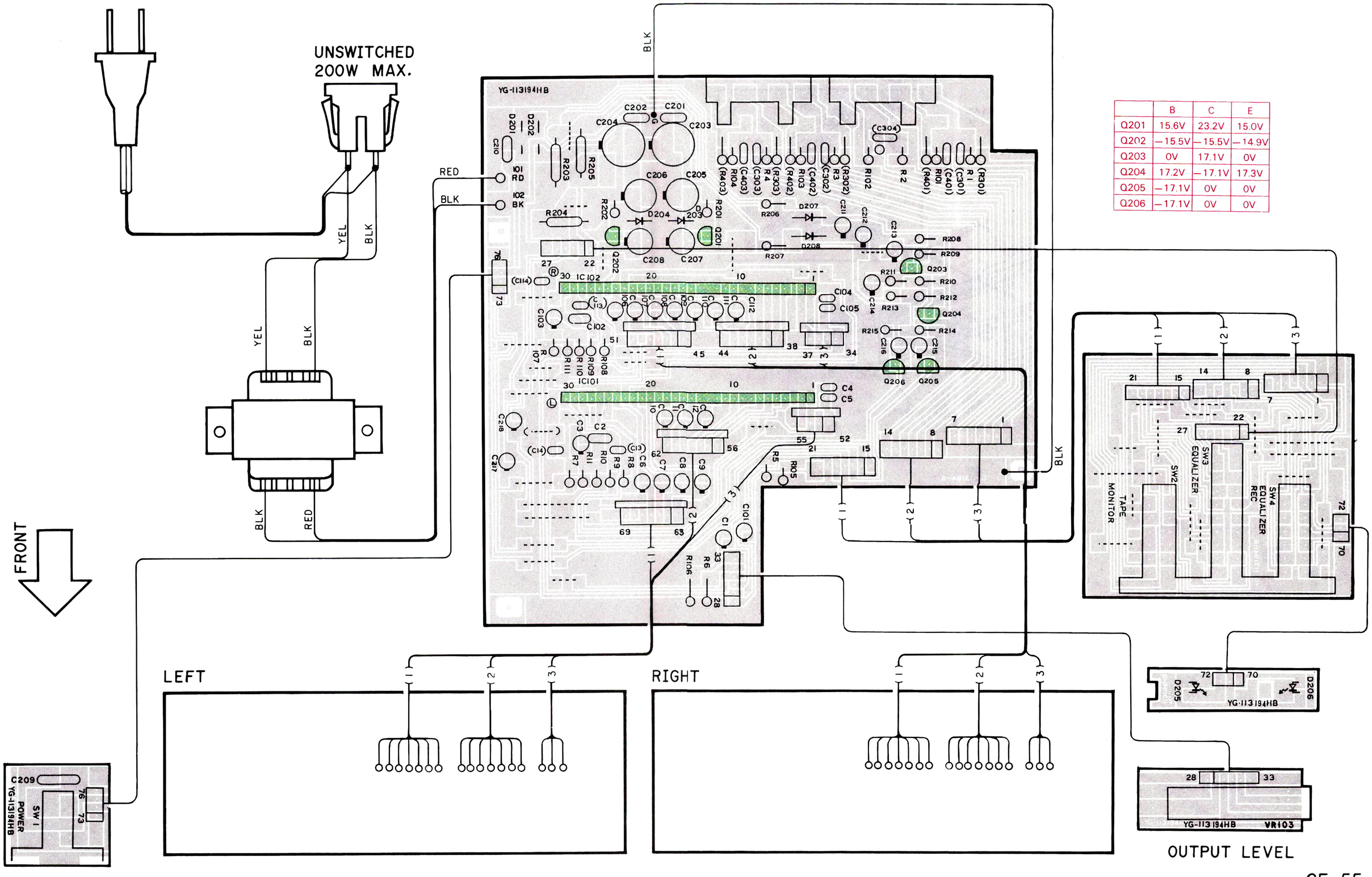

	B	C	E
Q201	15.6V	23.2V	15.0V
Q202	−15.5V	−15.5V	−14.9V
Q203	0V	17.1V	0V
Q204	17.2V	−17.1V	17.3V
Q205	−17.1V	0V	0V
Q206	−17.1V	0V	0V

GE-55

Refer to the schematic diagram for the values of resistors and capacitors.
The PC board drawing is viewed from the side easy to check.

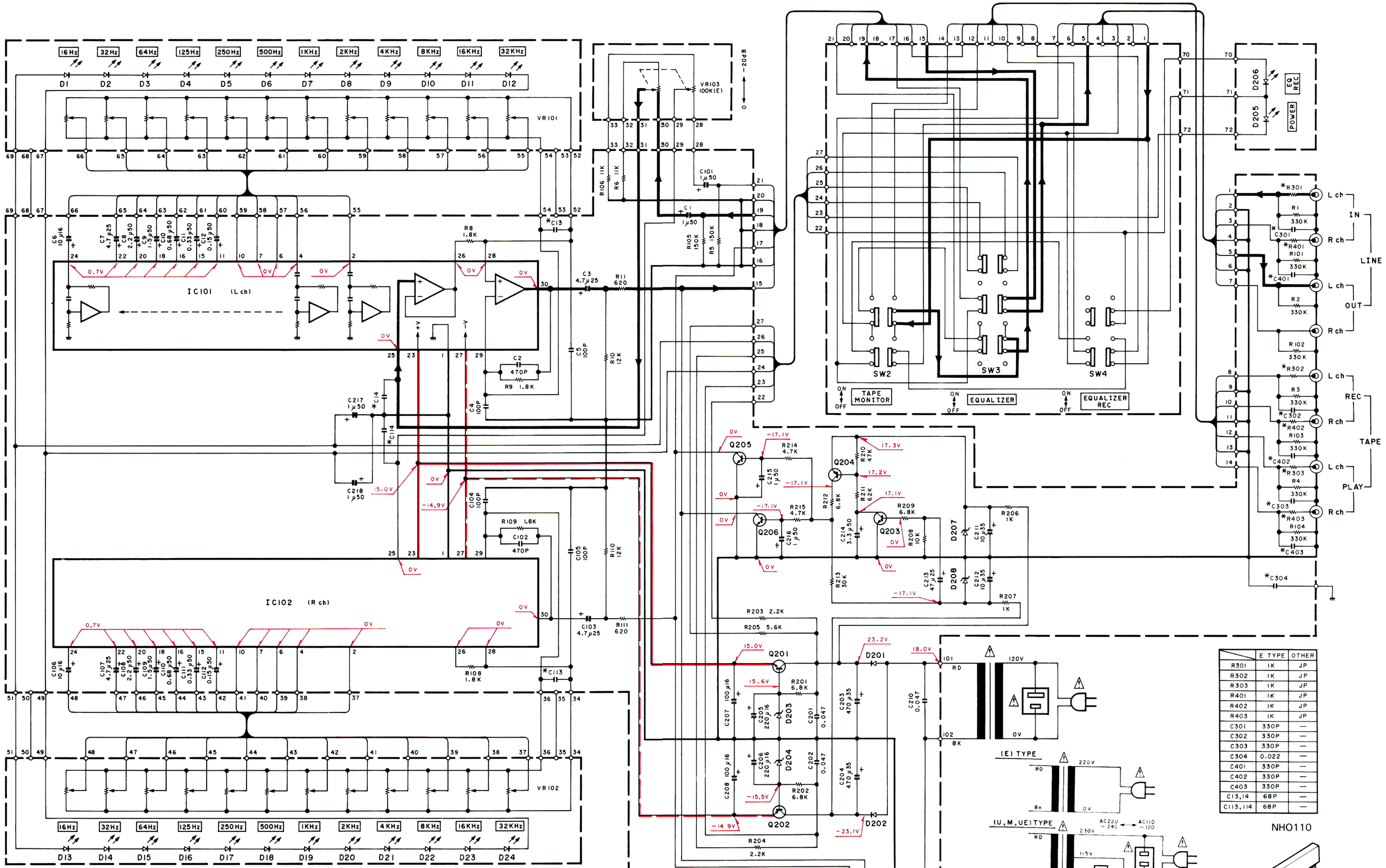

	E TYPE	OTHER
R301	1K	JP
R302	1K	JP
R303	1K	JP
R401	1K	JP
R402	1K	JP
R403	1K	JP
C301	330P	—
C302	330P	—
C303	330P	—
C304	0.022	—
C401	330P	—
C402	330P	—
C403	330P	—
C13,14	68P	—
C113,114	68P	—

IC101,102 : NHO110

Q201 : 2SD667-C
Q202 : 2SB647-C
Q203 : 2SC1815-GR
Q204 : 2SA1015-GR
Q205,206 : 2SC2878-A

D201,202 : IN4002
D203,204 : HZ-16-1
D205,206 : SLP153B
D207,208 : HZ-18-1

CAUTION: For continued safety, replace safety critical components only with manufacturer's recommended parts (refer to parts list). ⚠ Indicates safety critical components. To reduce the risk of electric shock, leakage-current or resistance measurements shall be carried out (exposed parts are acceptably insulated from the supply circuit) before the appliance is returned to the customer.

- DC voltages are measured with a high impedance voltmeter. Values may vary slightly due to variations between individual instruments or/and units.
- Les tensions c.c. doivent être measurées avec un voltmètre à haute impédance. Les valeurs peuvent différer légèrement du fait des variations inhérentes aux appareils et aux instruments de mesure individuels.
- Die angegebenen Gleichspannungswerte wurden mit einem hochohmigen Voltmeter gemessen. Dabei schwanken die Meßwerte aufgrund von Unterschieden zwischen einzelnen Instrumenten oder Geräten u. U. geringfügig.

EXPLODED VIEW

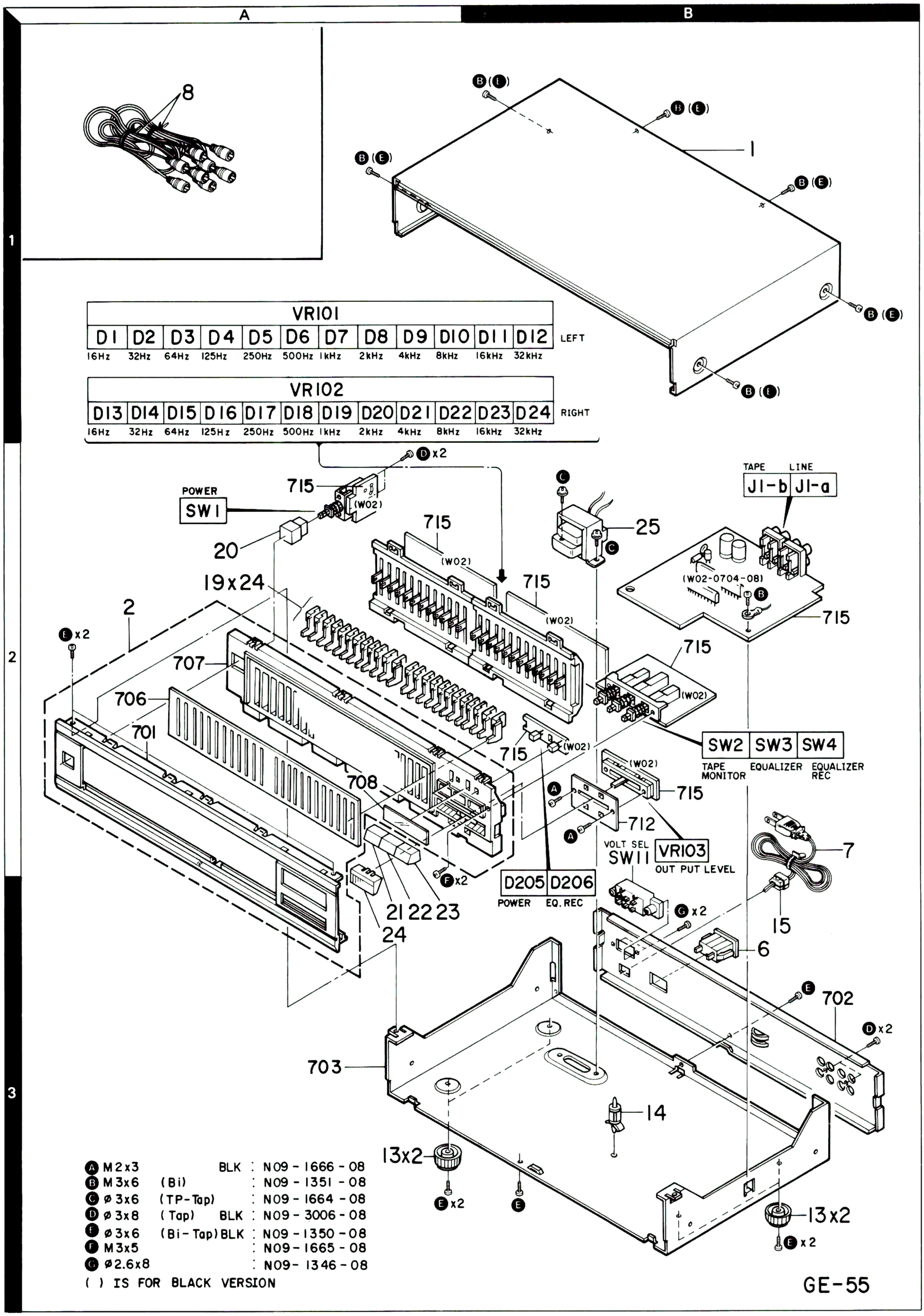

Parts with the exploded numbers larger than 700 are not supplied.

PARTS LIST

⁎ New Parts
Parts without **Parts No.** are not supplied.
Les articles non mentionnes dans le **Parts No.** ne sont pas fournis.
Telle ohne **Parts No.** werden nicht gellefert.

Ref. No. 参照番号	Address 位置	New Parts 新	Parts No. 部品番号	Description 部品名／規格	Destination 仕向	Remarks 備考
			GE-55			
1	1B	*	A01-0681-08	METALLIC CABINET	KPUMUE	S
1	1B	*	A01-0681-08	METALLIC CABINET	EX	S
1	1B		A01-1423-08	METALLIC CABINET	KPUMUE	B
1	1B		A01-1423-08	METALLIC CABINET	EX	B
2	2A	*	A20-4936-08	PANEL ASSY	KPUMUE	B
2	2A	*	A20-4936-08	PANEL ASSY	EX	B
2	2A	*	A20-4937-08	PANEL ASSY	KPUMUE	S
2	2A	*	A20-4937-08	PANEL ASSY	EX	S
-			B46-0092-03	WARRANTY CARD	K	
-			B46-0094-03	WARRANTY CARD	UUEM	
-			B46-0095-03	WARRANTY CARD	UUEM	
-			B46-0096-13	WARRANTY CARD	X	
-			B46-0121-03	WARRANTY CARD	P	
-			B46-0122-13	WARRANTY CARD	E	
-		*	B50-6288-00	INSTRUCTION MANUAL(ENGLISH)	KPUMUE	
-		*	B50-6288-00	INSTRUCTION MANUAL(ENGLISH)	EX	
-		*	B50-6289-00	INSTRUCTION MANUAL(FRENCH)	PMEX	
-		*	B50-6290-00	INSTRUCTION MANUAL(SPANISH)	M	
-		*	B50-6291-00	INSTRUCTION MANUAL(ARABIC)	A	
-		*	B50-6293-00	INSTRUCTION MANUAL(G/D/I)	E	
-			B58-0223-04	CAUTION CARD	UM	
-			B58-0245-33	CAUTION CARD	E	
-			B58-0269-04	CAUTION CARD	KP	
-			B58-0513-04	CAUTION CARD	UE	
-			B59-0092-00	SERVICE DIRECTORY		
6	3B	*	E03-0087-08	AC OUTLET		
7	2B		E30-0651-08	AC POWER CORD	E	
7	2B		E30-0658-08	AC POWER CORD	UMUE	
7	2B		E30-0661-08	AC POWER CORD	X	
7	2B		E30-0985-08	AC POWER CORD	KP	
8	1A		E30-0745-08	AUDIO CORD		
-		*	H01-7234-08	ITEM CARTON BOX	KPUMUE	S
-		*	H01-7234-08	ITEM CARTON BOX	EX	S
-		*	H01-7236-08	ITEM CARTON BOX	KPUMUE	B
-		*	H01-7236-08	ITEM CARTON BOX	EX	B
13	3A,3B	*	J02-0181-08	FOOT		
14	3B	*	J19-2527-08	UNIT HOLDER		
15	3B		J42-0099-08	POWER CORD BUSHING		
-			J61-0019-05	WIRE BAND		
19	2A	*	K27-1660-08	KNOB(LEVER) G.E.		
20	2A		K29-1146-04	KNOB ASSY(BUTTON) POWER		S
20	2A		K29-2133-08	KNOB ASSY(BUTTON) POWER		B
21	3A	*	K27-1657-08	KNOB(BUTTON) TAPE MONITOR		
22	3A	*	K27-1658-08	KNOB(BUTTON) EQUALIZER		
23	3A	*	K27-1659-08	KNOB(BUTTON) EQUALIZER REC		
24	3A	*	K27-1661-08	KNOB(SLIDE) OUTPUT LEVEL		
25	2B	*	L01-7261-08	POWER TRANSFORMER	KP	
25	2B	*	L01-7262-08	POWER TRANSFORMER	E	
25	2B	*	L01-7266-08	POWER TRANSFORMER	UMUE	
25	2B	*	L01-7267-08	POWER TRANSFORMER	X	

E: Scandinavia & Europe **H**:Audio Club **K**: USA **P**: Canada **W**:Europe
T: England **U**: PX(Far East, Hawaii)
UE : AAFES(Europe) **X**: Australia **M**: Other Areas

S: Silver Version
B: Black Version

⚠ indicates safety critical components.

www.hifiengine.com

PARTS LIST

⁎ New Parts

Parts without **Parts No.** are not supplied.

Les articles non mentionnes dans le **Parts No.** ne sont pas fournis.

Telle ohne **Parts No.** werden nicht geliefert.

Ref. No. 参照番号	Address 位置	New Parts 新	Parts No. 部品番号	Description 部品名／規格	Destination 仕向	Remarks 備考
A	2B	*	N09-1666-08	PAN HEAD MACHINE SCREW(Ø2X3)		
B	1B,2B		N09-1351-08	BINDING HEAD TAP SCREW(M3X6)		
C	2B	*	N09-1664-08	TP HEAD SCREW (Ø3X6)		
D	1A,3B	*	N09-3006-08	TAPTITE SCREW (Ø3X8)		
E	2A,3B		N09-1350-08	BINDING HEAD TAP SCREW(Ø3X6)		
F	2A	*	N09-1665-08	PAN HEAD MACHINE SCREW(Ø3X5)		
SW11	2B		S31-2087-08	SLIDE SW (VOLTAGE SELECTOR)		
ELECTRIC PARTS (W02-0704-08)						
D1 -24	1A,1B	*	B30-1156-08	LED(SLIDE VOL)		
D205,206	2B	*	B30-1144-08	LED(POWER,EQ REC)		
C1		*	CE04KW1V1R0M	ELECTRO 1.0UF 35WV		
C2		*	C91-0844-08K	MYLAR 470PF J		
C3		*	CE04KW1E4R7M	ELECTRO 4.7UF 25WV		
C4 ,5		*	CK45D1H101M	CERAMIC 100PF M		
C6			CE04KW1C100M	ELECTRO 10UF 16WV		
C7		*	CE04KW1E4R7M	ELECTRO 4.7UF 25WV		
C8		*	CE04KW1V2R2M	ELECTRO 2.2UF 35WV		
C9		*	CE04KW1V1R5M	ELECTRO 1.5UF 35WV		
C10		*	CE04KW1VR68M	ELECTRO 0.68UF 35WV		
C11		*	CE04KW1VR33M	ELECTRO 0.33UF 35WV		
C12		*	CE04KW1VR15M	ELECTRO 0.15UF 35WV		
C13 ,14		*	CK45D1H680M	CERAMIC 68PF M		
C101		*	CE04KW1V1R0M	ELECTRO 1.0UF 35WV		
C102		*	C91-0844-08	MYLAR 470PF J		
C103		*	CE04KW1E4R7M	ELECTRO 4.7UF 25WV		
C104,105		*	CK45D1H101M	CERAMIC 100PF M		
C106			CE04KW1C100M	ELECTRO 10UF 16WV		
C107		*	CE04KW1E4R7M	ELECTRO 4.7UF 25WV		
C108		*	CE04KW1V2R2M	ELECTRO 2.2UF 35WV		
C109		*	CE04KW1V1R5M	ELECTRO 1.5UF 35WV		
C110		*	CE04KW1VR68M	ELECTRO 0.68UF 35WV		
C111		*	CE04KW1VR33M	ELECTRO 0.33UF 35WV		
C112		*	CE04KW1VR15M	ELECTRO 0.15UF 35WV		
C113,114		*	CK45D1H680M	CERAMIC 68PF M		
C201,202		*	CK45FF1H4732	CERAMIC 0.0473UF	E	
C203,204			CE04KW1V471M	ELECTRO 470UF 35WV		
C205,206			CE04KW1C221M	ELECTRO 220UF 16WV		
C207,208			CE04KW1C101M	ELECTRO 100UF 16WV		
C209			CK45FE2H103P	CERAMIC 0.010UF P		
C210		*	CK45FF1H4732	CERAMIC 0.0473UF		
C211,212			CE04KW1V100M	ELECTRO 10UF 35WV		
C213			CE04KW1E470M	ELECTRO 47UF 25WV		
C214		*	CE04KW1V3R3M	ELECTRO 3.3UF 35WV		
C215,216		*	CE04KW1V1R0M	ELECTRO 1.0UF 35WV		
C217,218		*	CE04KW1V1R0M	ELECTRO 1.0UF 35WV		
C301-303		*	C91-0845-08	MYLAR 330PF J	E	
C304			CK45FF1H223Z	CERAMIC 0.022UF Z	E	
C401-403		*	C91-0845-08	MYLAR 330PF J	E	
D201,202			1N4002	ZENER DIODE		
D203,204			HZ16-1	ZENER DIODE		
D207,208			HZ18-1	ZENER DIODE		
J1	2B		E13-0442-08	PHONO JACK(4P) TAPE,LINE	KPUM	
J1	2B		E13-0442-08	PHONO JACK(4P) TAPE,LINE	UEEX	
J1	2B	*	E13-0453-08	PHONO JACK(4P) TAPE,LINE	E	

E: Scandinavia & Europe **H**:Audio Club **K**: USA **P**: Canada **W**:Europe

T: England **U**: PX(Far East, Hawaii)

UE : AAFES(Europe) **X**: Australia **M**: Other Areas

⚠ indicates safety critical components.

www.hifiengine.com

SPECIFICATIONS

Equalizer characteristic	
Variable range	±10 dB (L & R independently adjustable)
Center frequencies	16 Hz, 32 Hz, 64 Hz, 125 Hz, 250 Hz, 500 Hz 1 kHz, 2 kHz, 4 kHz, 8 kHz, 16 kHz, 32 kHz
Attenuation	−20 dB at 1 kHz
Frequency response	10 Hz—50 kHz +0 dB, −1 dB
Harmonic distortion	Less than 0.01% (20 Hz—20 kHz, all controls flat, output 1 V)
Maximum output	5 V (1 kHz, THD 0.05%, RL 47 kohms)
S/N ratio	110 dB (Short-circuited IHF-A network)
Input impedance	47 kohms
Gain	0 dB
Power consumption	7 W
Dimensions	W: 420 mm (16-9/16″) H: 88 mm (3-7/16″) D: 262 mm (10-5/16″)
Weight (Net)	2.8 kg (6.2 lb)

Note:

We follow a policy of continuous advancements in development. For this reason specifications may be changed without notice.

www.hifiengine.com

WORLD MAP & AREA CORD

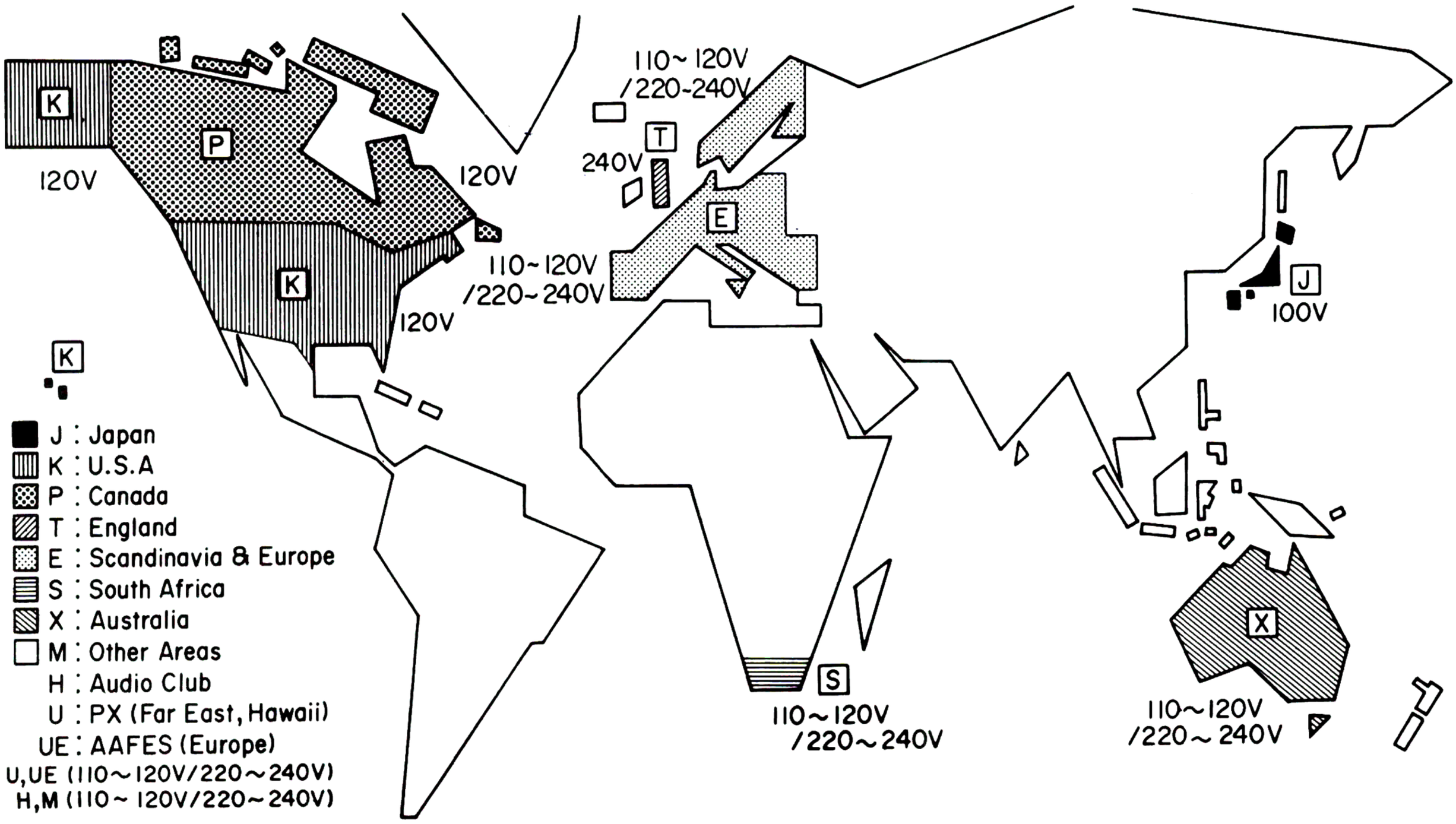

Note:

Component and circuitry are subject to modification to insure best operation under differing local conditions. This manual is based on, the U.S. (K) standard, and provides information on regional circuit modification through use of alternate schematic diagrams, and information on regional component variations through use of parts list.

TRIO-KENWOOD CORPORATION

Shionogi Shibuya Building, 17-5, 2-chome Shibuya, Shibuya-ku, Tokyo 150, Japan

KENWOOD ELECTRONICS
DIVISION OF KENWOOD U.S.A. CORPORATION
1315 E. Watsoncenter Rd., Carson, California 90745, U.S.A.
75 Seaview Drive, Secaucus, New Jersey 07094, U.S.A.

TRIO-KENWOOD CANADA INC.,
1070 Jayson Court, Mississauga, Ontario, Canada L4W 2V5

TRIO-KENWOOD ELECTRONICS, N.V.
Leuvensesteenweg 504 B-1930 Zaventem, Belgium

TRIO-KENWOOD ELECTRONICS GmbH
Rembrücker Str. 15, 6056 Heusenstamm, West Germany

TRIO-KENWOOD FRANCE S.A.
5, Boulevard Ney, 75018 Paris, France

TRIO-KENWOOD (AUSTRALIA) PTY. LTD. (INCORPORATED IN N.S.W.)
4E Woodcock Place, Lane Cove, N.S.W. 2066, Australia

KENWOOD & LEE ELECTRONICS, LTD.
Wang Kee Building 5th Floor, 34-37, Connaught Road Central, Hong Kong

www.hifiengine.com