STEREO INTEGRATED AMPLIFIER

KA-550

SERVICE MANUAL

KENWOOD

TRIO-KENWOOD CORPORATION

*Refer to Parts List on page 6.

www.hiflengine.com

DISASSEMBLY FOR REPAIR

1. Remove the six screws mounted on the upper and lower section of the front panel.
2. Remove the front panel from the main body.
3. Hold the lug protruded from the back of the front panel with pliers, and remove the knob in the direction of the arrow.
4. Remove the knobs in the direction of an arrow.

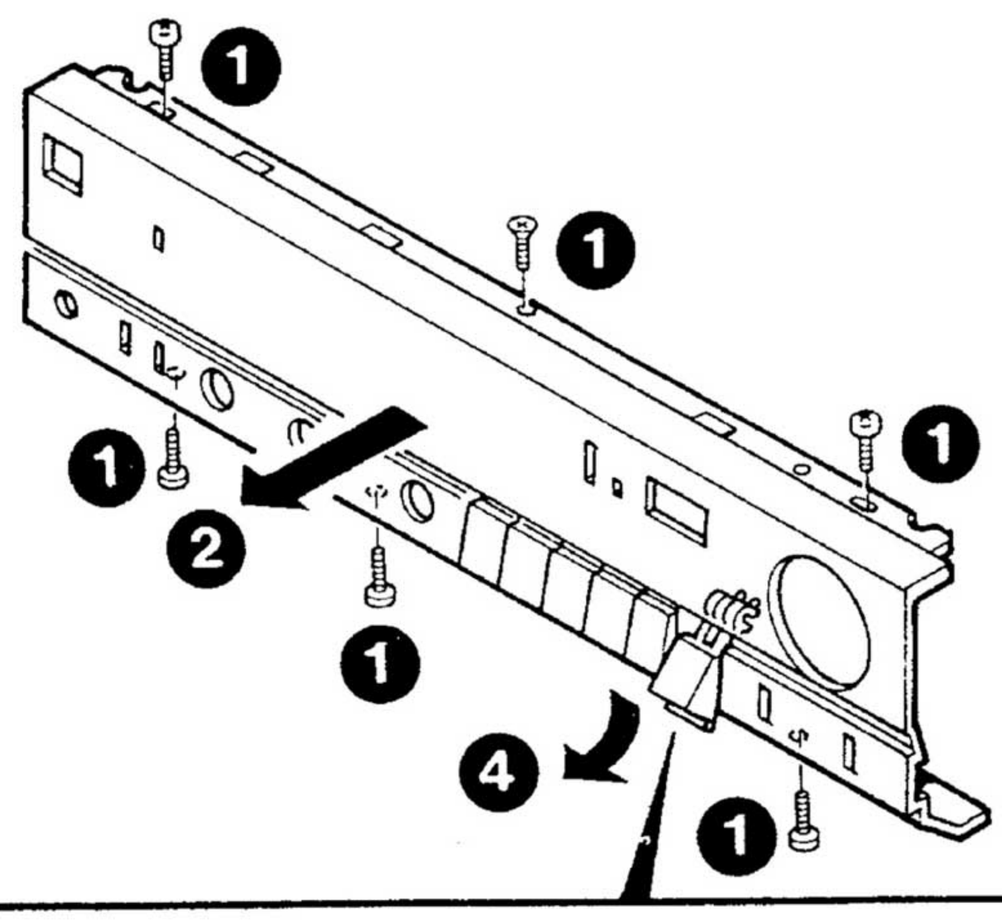

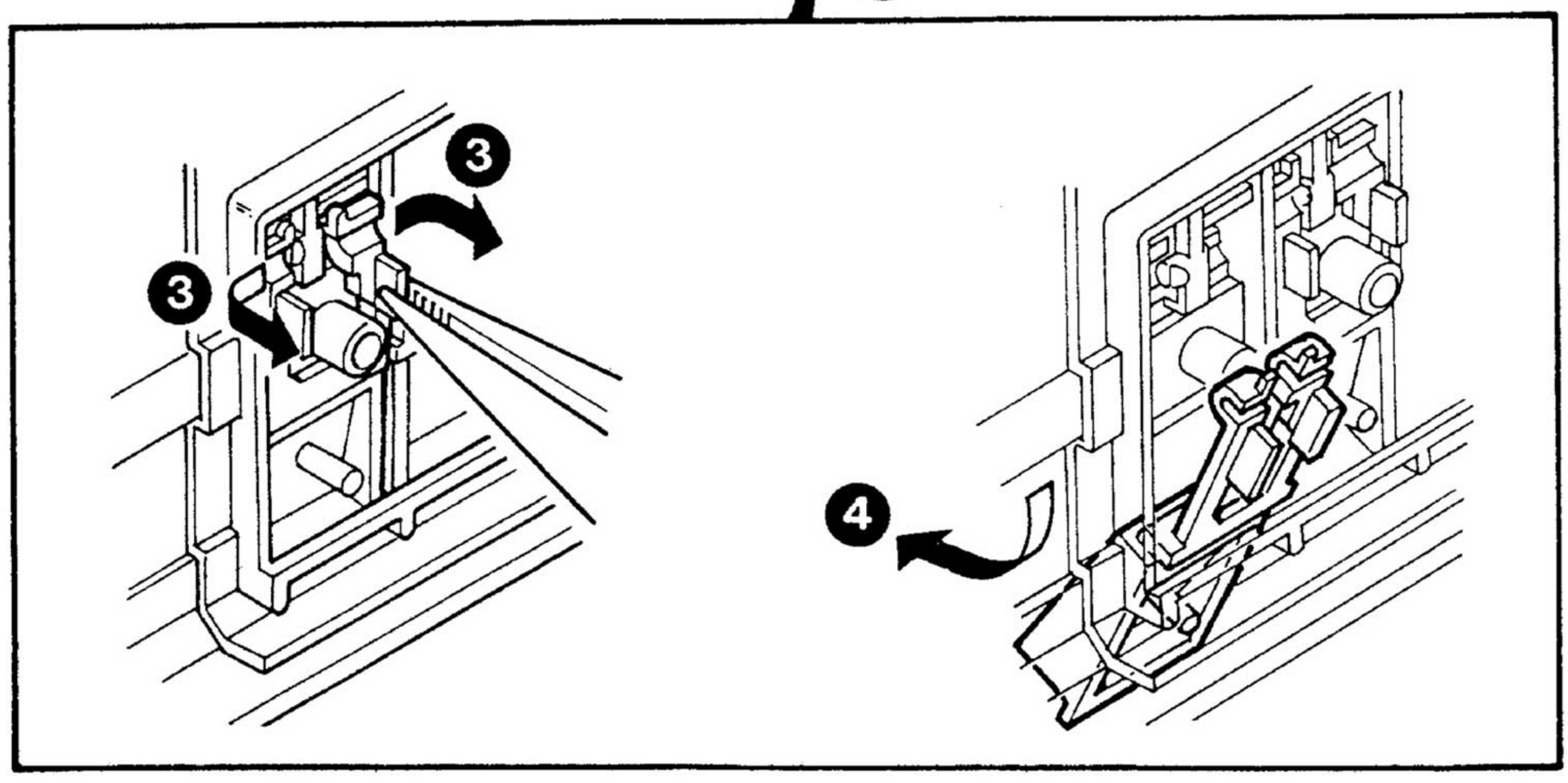

BLOCK & LEVEL DIAGRAM

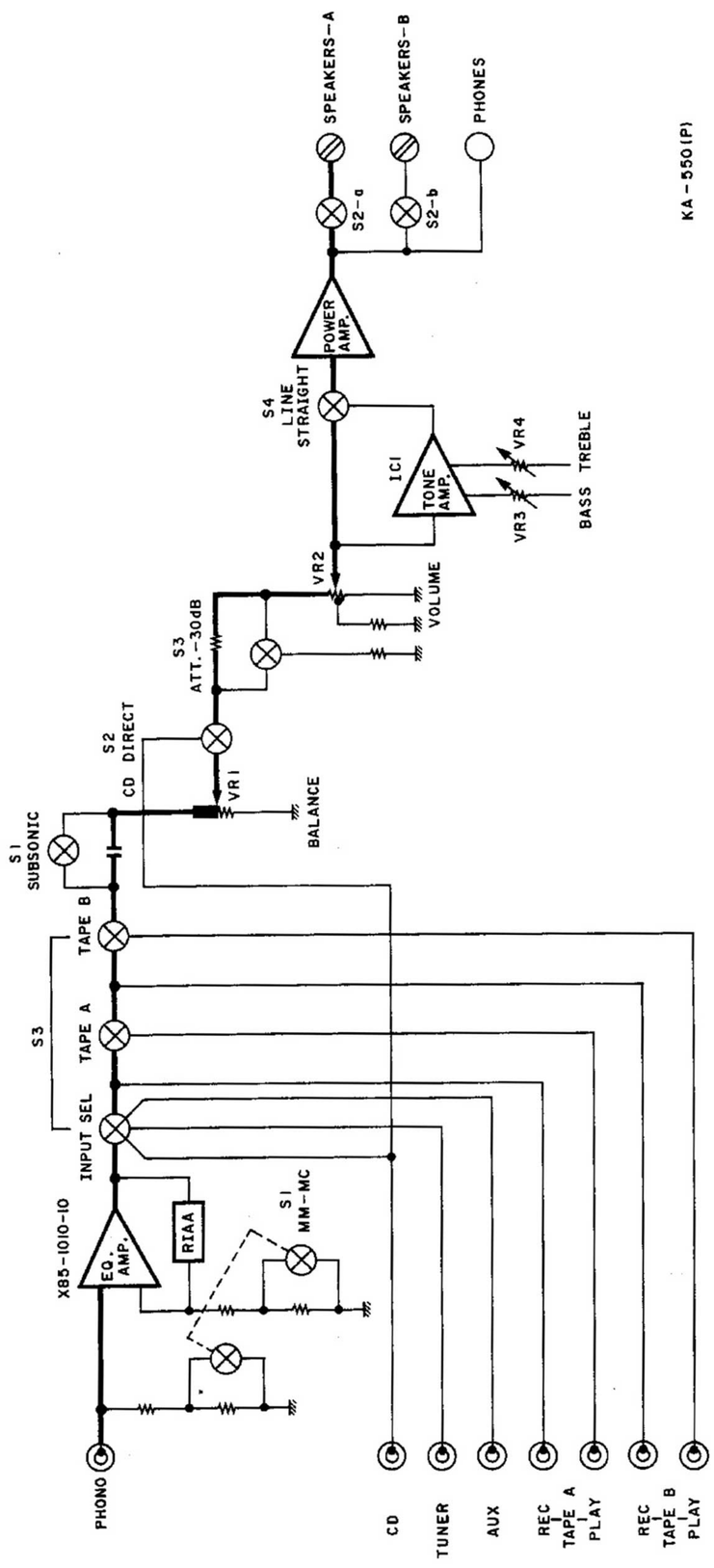

CIRCUIT DESCRIPTION

Component function

Audio unit (X09-2301-00)

Components	Functions	Operations
IC1	AF power amp (2-current, 2-channel. 40 W, Min)	Operational characteristics at Ta = 25° C, Vcc = ±32 V, R_L = 8 ohms, V_G = 40 dB
IC2	Protection	
Q1, 2	Power supply for power amp section (for constant-current)	
Q5	Power supply for equalizer	Substitution : 2SC 2590
Q6	Power supply for equalizer	Substitution : 2SA 1110
Q7, 8	Power supply for equalizer	
D1-4	Rectifier	
D5, 7	Rectifier (Power supply for relay)	
D6	Rectifier (Power supply for LED)	Substitution : W06B
D8, 9	Constant voltage power-supply for EQ amp	Sub stitution : RD20J (B2)
D10	Constant-current (Power supply for power amp section)	Substitution : RD 2.7E (B2)
D11, 12	Equalizer power compensation on in stantaneous voltage roll-off	Substitution : W06B

			min	typ	max
No-signal current Icco		Vcc = ±38.5 V	35	70	120(mA)
Output power	Po (1)	THD = 0.02% f = 20 Hz ~ 20 kHz	40	—	— (W)
	Po (2)	Vcc = ±29 V, THD = 0.08% RL = 4 Ω, f = 1 kHz	45	—	—(W)
Total harmoni distortion	THD	Po = 1 W f = 20 Hz ~ 20 kHz	—	—	0.02(%)
Frequency responce	f_L, f_H	Po = 1 W, $^{+0}_{-3}$ dB	10 ~ 100 K(Hz)		

Tone unit (X11-2261-00)

Components	Functions	Operations
IC1	Tone amp	
D1-6	INPUT SELECTOR indicators	
D7	POWER ON indicator	
D8	CD DIRECT indicator	
D9, 10	Tone power	Substitution : RD16E (B)

KA-550 KA-550

PC BOARD

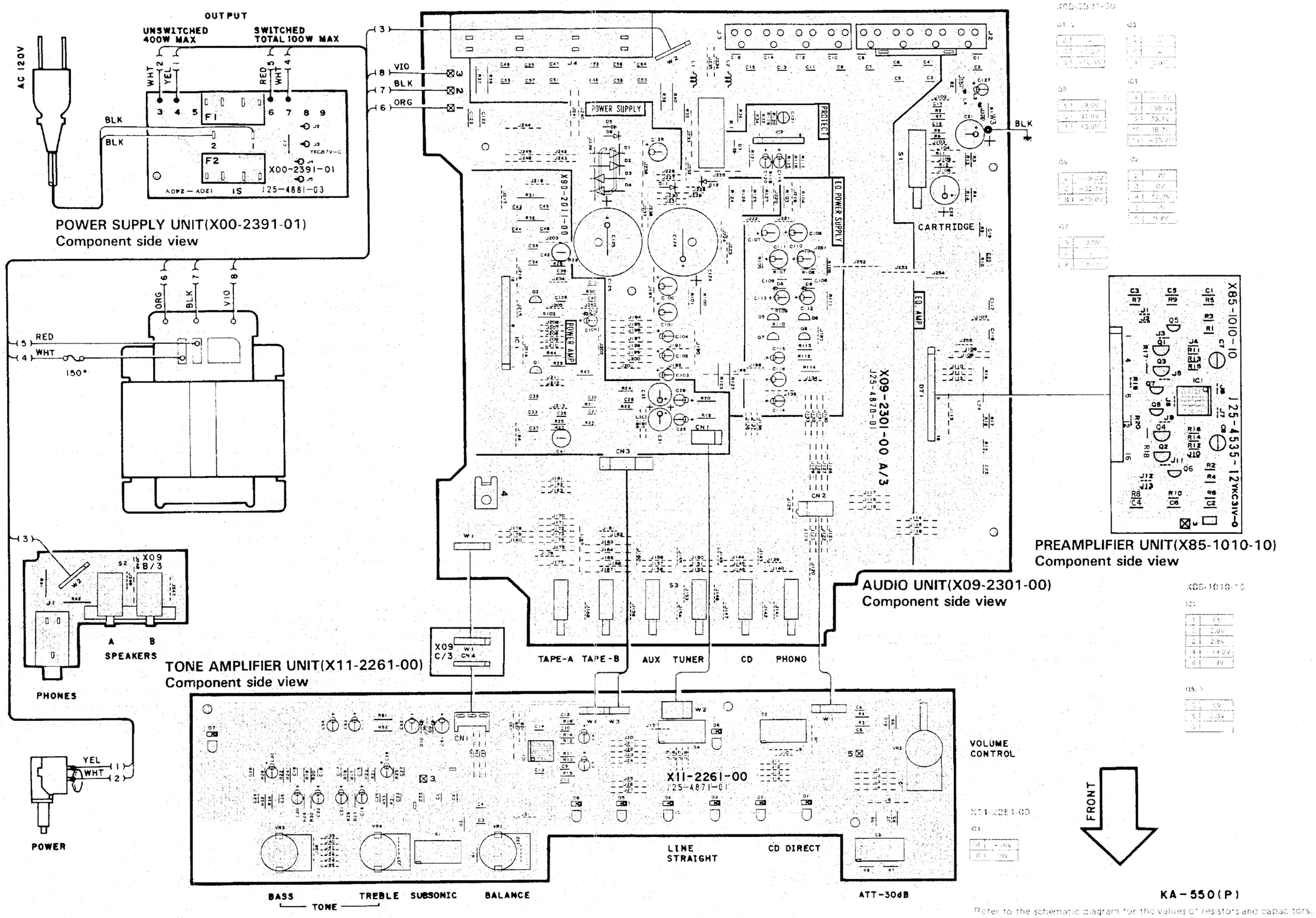

Refer to the schematic diagram for the values of resistors and capacitors.

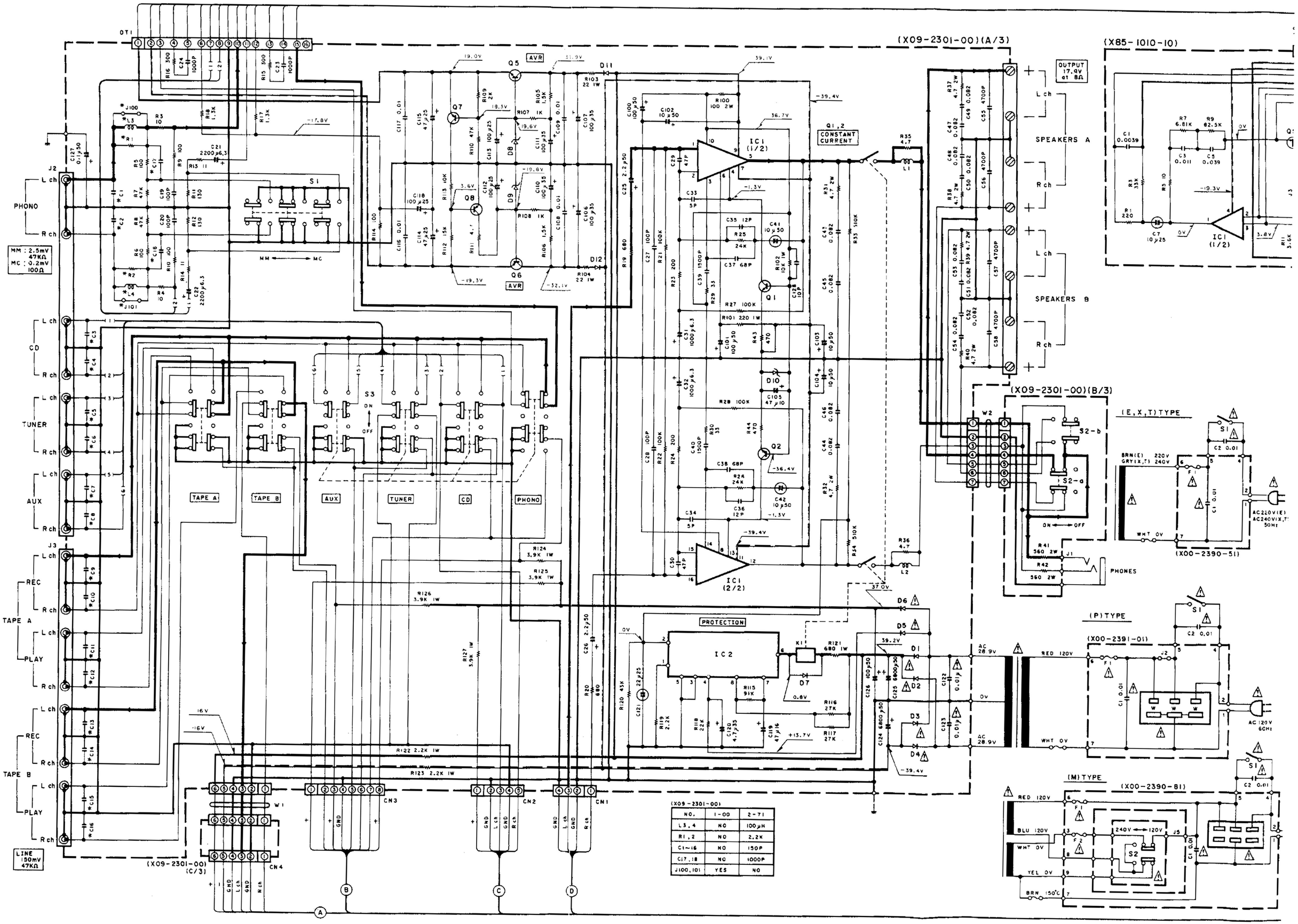

(X09-2301-00)

NO.	1-00	2-71
L3,4	NO	100μH
R1,2	NO	2.2K
C1~16	NO	150P
C17,18	NO	1000P
J100,101	YES	NO