KENWOOD

HI/FI STEREO COMPONENTS

SERVICE MANUAL

KR-2300

STEREO RECEIVER

www.hifiengine.com

CONTENTS

EXTERNAL VIEW 3
TOP CHASSIS VIEW 4
TROUBLESHOOTING 5
ADJUSTMENT
TUNER SECTION . . . . . 6~ 8
AUDIO SECTION 9
DISASSEMBLY OF KR-2300 10
MOUNTING TEMPLATE 11
DIAL CORD/TRANSISTOR LEADS 12
SUBSTITUTION TRANSISTORS 13
PARTS LIST
TOTAL PARTS LIST 14, 15
SUB PARTS LIST 16
TUNER (X05-1020-10 or 61) . . . . . 17 ~20
AUDIO (X09-1080-10) . . . . . 21~ 23
PC BOARD
TUNER 24
AUDIO 25
BLOCK DIAGRAM 26
SCHEMATIC DIAGRAM 27
SPECIFICATIONS 28

www.hifiengine.com

EXTERNAL VIEW

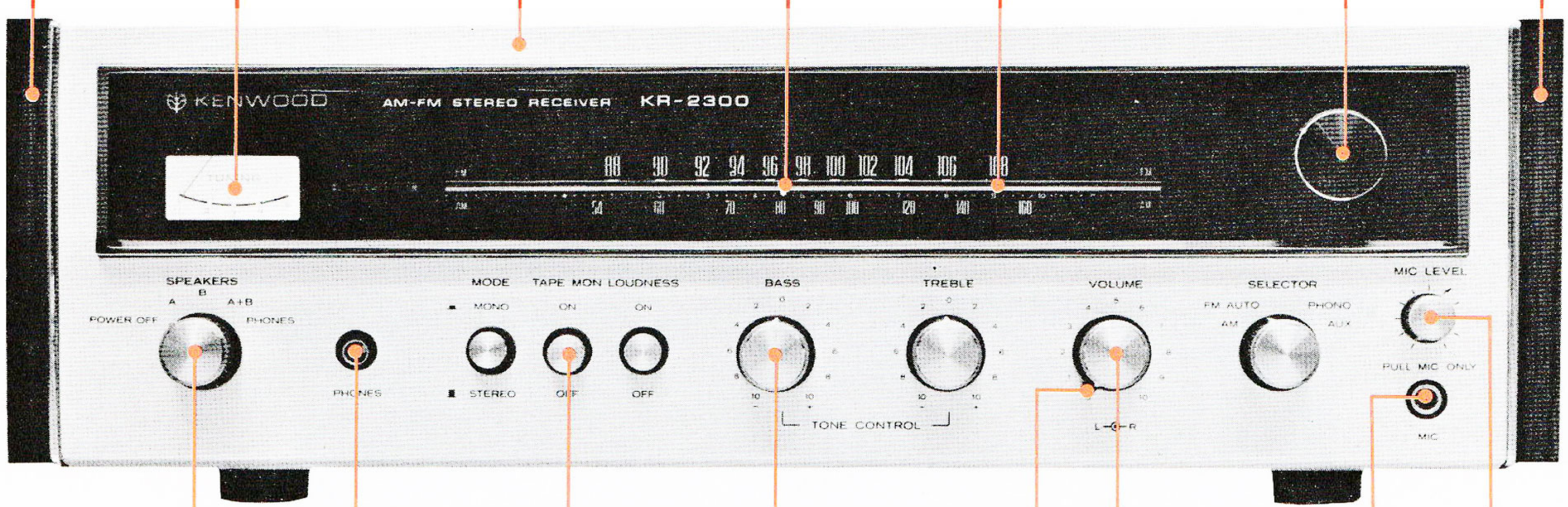

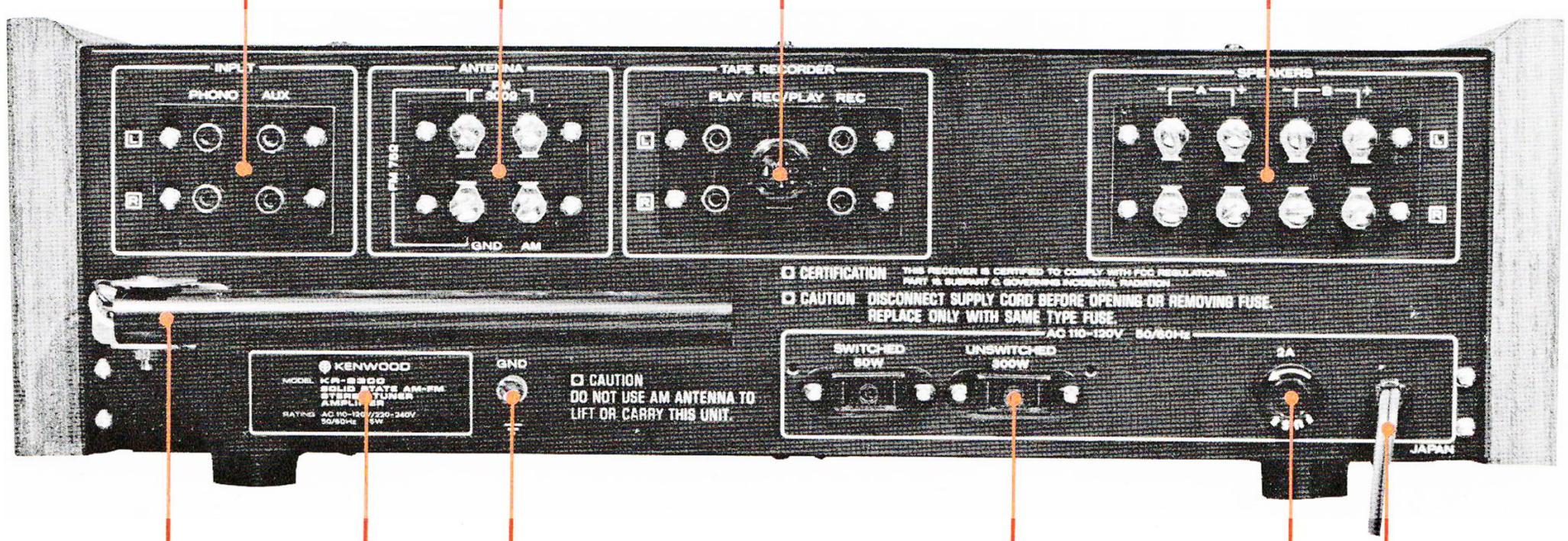

* Refer to SUB PARTS LIST.

TOP CHASSIS VIEW

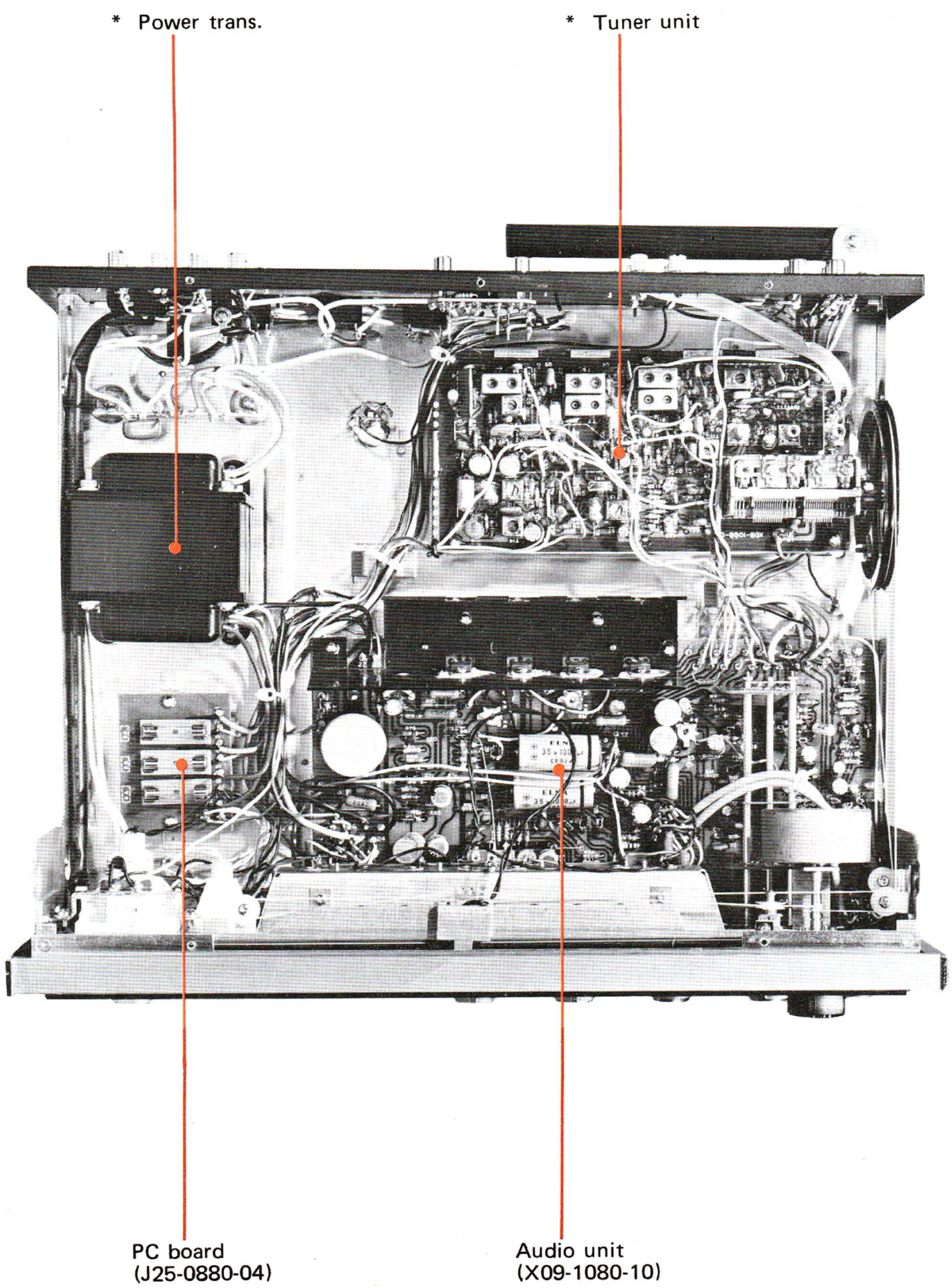

* Refer to SUB PARTS LIST.

www.hifiengine.com

TROUBLE SHOOTING

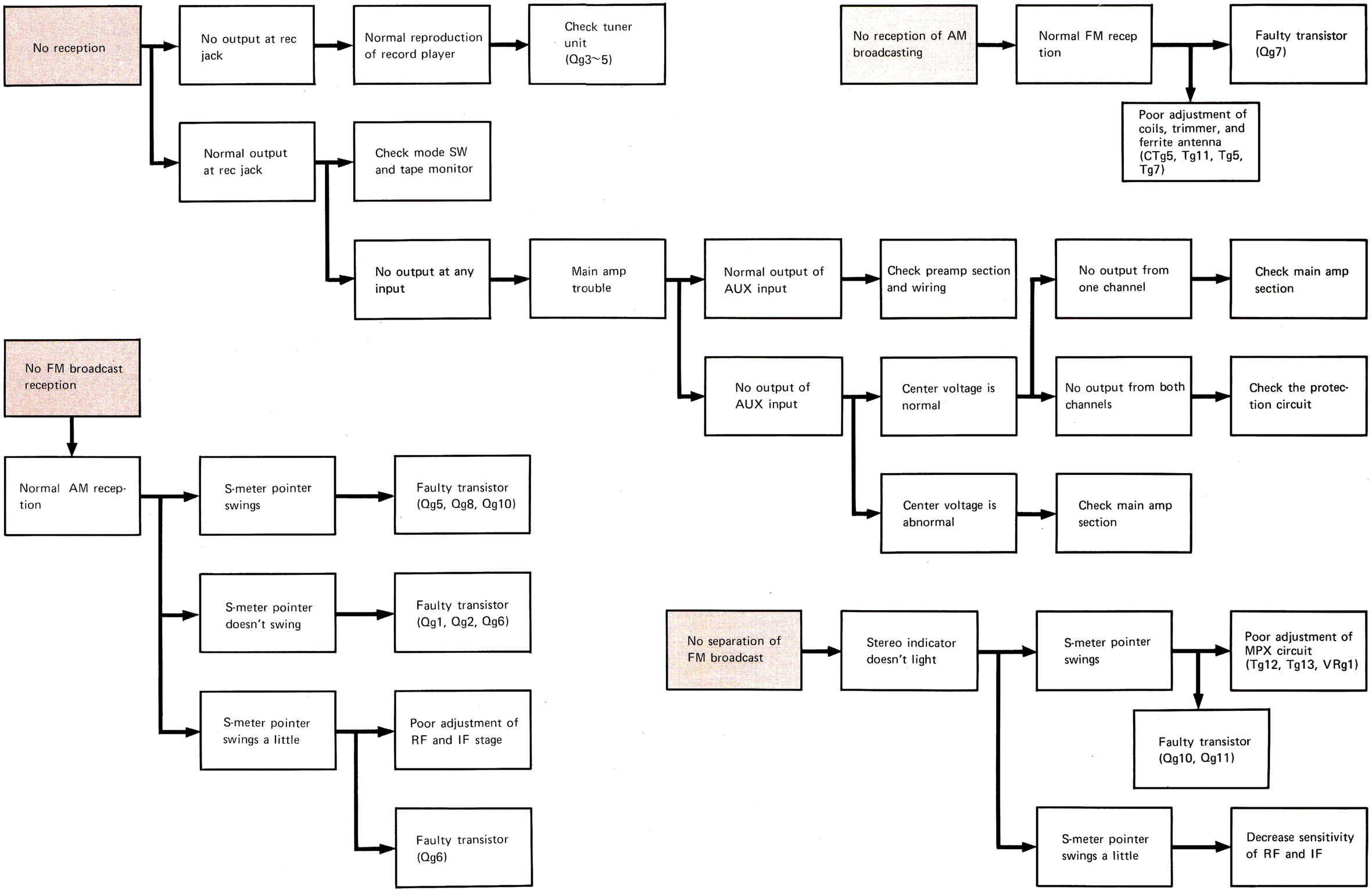

www.hifiengine.com

www.hifiengine.com

ADJUSTMENT OF TUNER SECTION

6. Set the r.f. generator to 105 MHz, the modulation of 400 Hz, the deviation of 75 kHz and the input of 10μV.
7. Set dial pointer to 105 MHz on dial calibrations.
8. Adjust trimmer CTg1 ~ 3 so that the output is at maximum.

ADJUSTING SCA FILTER

1. Connect audio generator set to 67 kHz to test point 3.
2. Connect VTVM to test point 4.
3. Adjust core of Tg14 so that the output is minimum.

ADJUSTING MPX

1. Set the MPX generator to the followings:
   SELECTOR → A + B PHASE → NORMAL
   MODULATION → 400 Hz DEVIATION → 67.5 kHz
   OUTPUT → EXT jack of the r.f. generator
2. Connect the r.f. generator to antenna terminal and the VTVM to the rec jack.
3. Check the stereo indicator to be on.
4. Switch the selector of MPX generator to REVERSE (A – B).
5. Adjust the core of Tg12, 13 so that the output is at maximum.
6. Switch the selector of MPX generator to NORMAL (A + B).
7. Set the deviation and the output to 40 kHz and 1mV.
8. Adjust the pc trimmer potentiometer VRg1 so that the stereo indicator is on.

ADJUSTING SEPARATION

1. Connect the MPX generator set to 100 MHz, modulation of 400 Hz, deviation of 67.5 kHz, and output of 1mV to antenna terminal.
2. Switch selector of the MPX generator to R (A).
3. Adjust pc trimmer potentiometer VRe1 so that the Left output is at minimum.
4. Switch selector of the MPX generator to L (B).
5. Adjust pc trimmer potentiometer VRe1 so that the Right output is at minimum.

NOTE: In case of difference between right and left, set pc trimmer potentiometer VRe1 to average.

www.hifiengine.com

ADJUSTMENT OF TUNER SECTION

ADJUSTING AM-IFT

1. Connect the sweep generator set to 455 kHz to test point 6.
2. Connect the oscilloscope to the test point 7.
3. Adjust the core of i.f.t. Tg5, 7, 9 so that the output is at maximum.

ADJUSTING TRACKING

1. Connect the r.f. generator set to 600 kHz, modulation of 30% at 400 Hz to antenna terminal.
2. Connect the VTVM to the rec jack.
3. Set the dial pointer to the 600 kHz on the dial calibrations.
4. Adjust the OSC-trans. Tg11 and ferrite antenna so that the output is at maximum.

5. Connect the r.f. generator set to 1,400 kHz, modulation of 30% at 400 Hz to antenna terminal.
6. Connect the VTVM to the rec jack.
7. Set the dial pointer to the 1,400 kHz on the dial calibrations.
8. Adjust the trimmer CTg4, 5 so that the output is at maximum.

▼ **Tuner Unit**

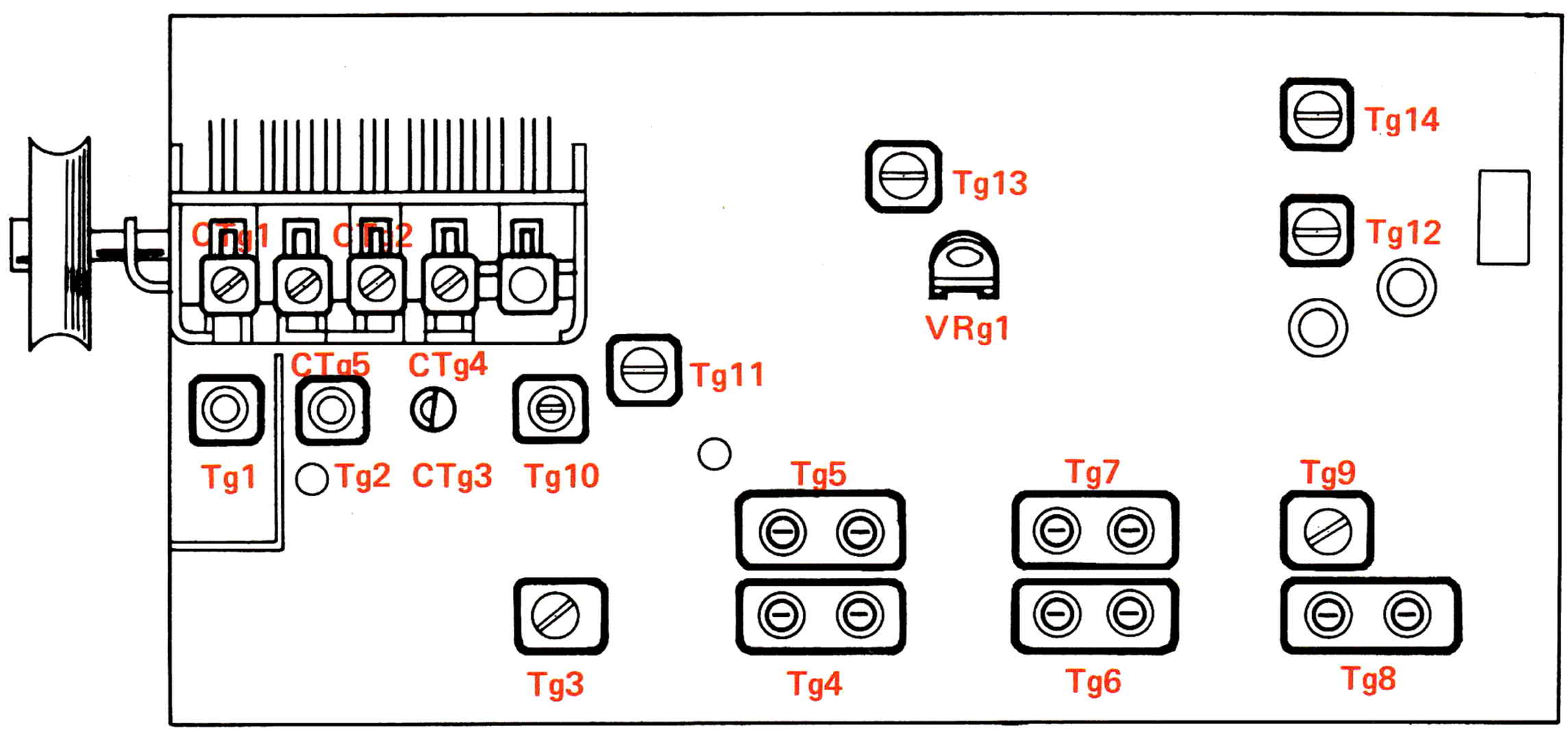

www.hifiengine.com

ADJUSTMENT OF AUDIO SECTION

BIAS ADJUSTMENT

WHEN USING TESTER AS AMMETER

1. Set pc trimmer potentiometer VRe5, 6 to its min..
2. Couple tester (as ammeter) to emitter resistor and ground.
3. Adjust pc trimmer potentiometer so that tester reading is 20 mA.
4. Check output waveform has not distortion.
5. If not, check main amp unit.

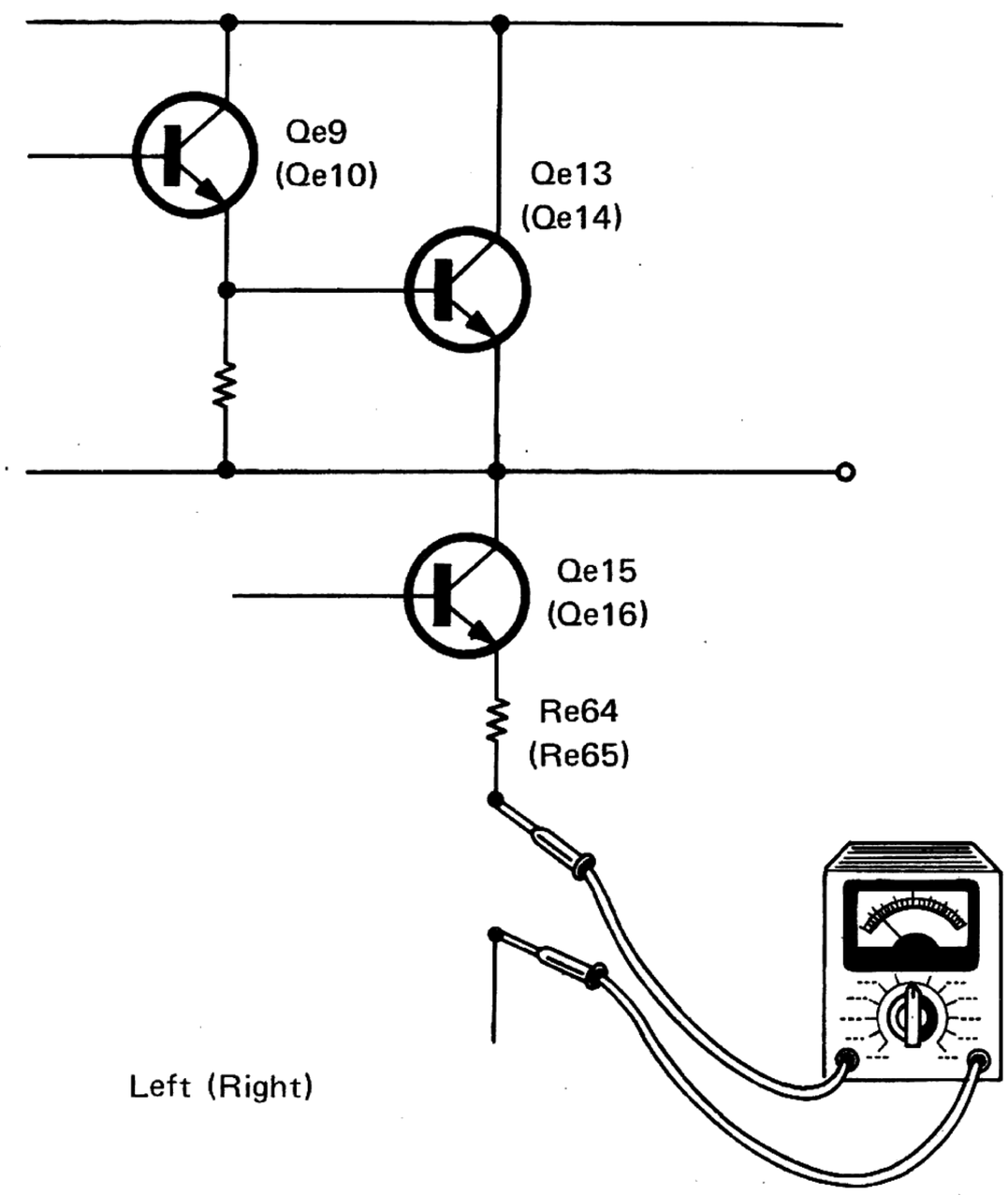

www.hifiengine.com

DISASSEMBLY OF KR-2300

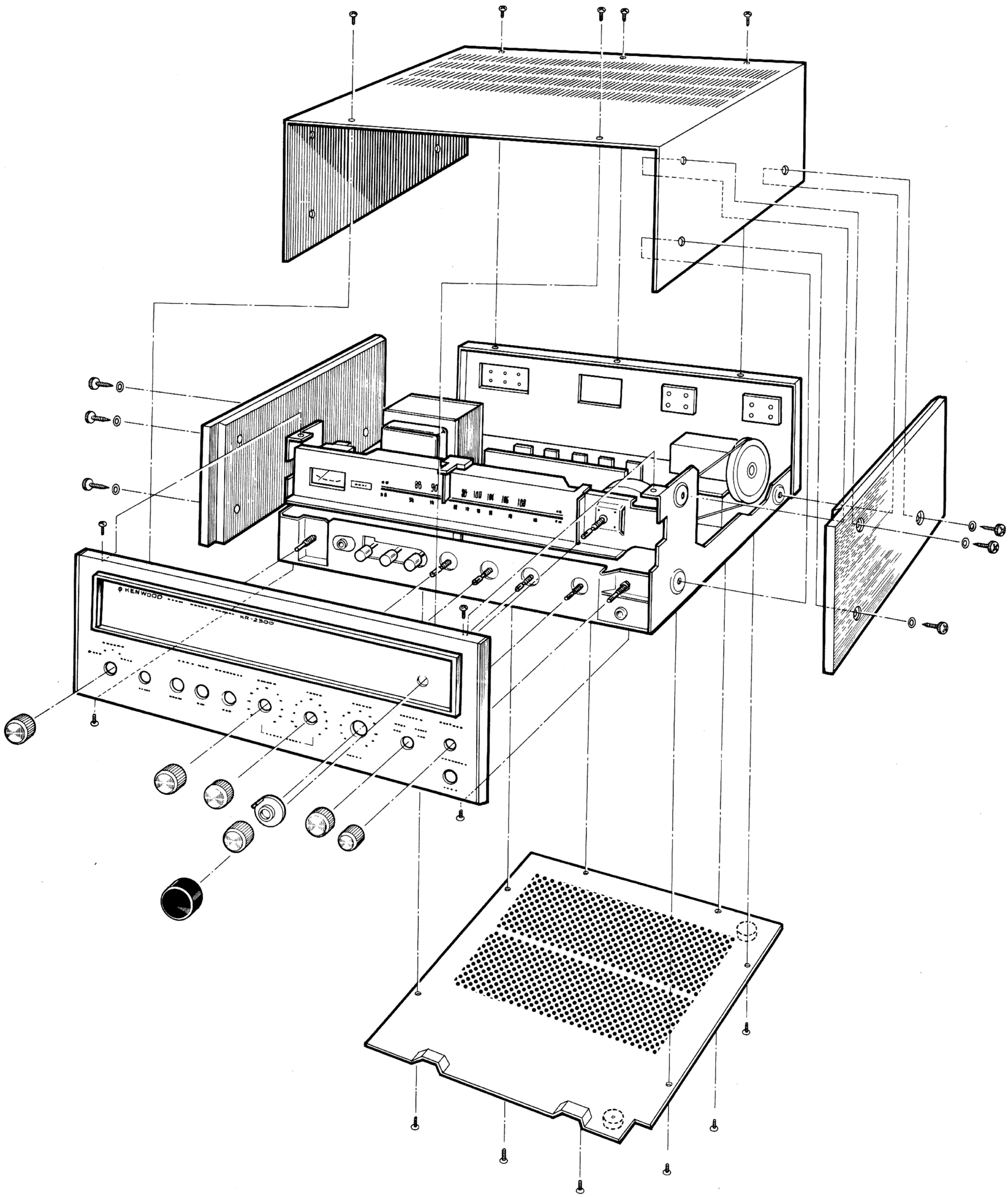

www.hifiengine.com

MOUNTING TEMPLATE

DIRECTIONS FOR PANEL MOUNTING

1. First remove the wooden side boards which are attached to both sides of the receiver's metal enclosure. This can be done by removing three screws from each side board. Put these long screws away until such time as you may wish to reattach the side boards later. They are not required for panel mounting.
2. The 4 short screws which are supplied with this unit are now used to join the receiver chassis and its metal enclosure. Screw them into the two lower holes on each side of the metal enclosure. Never use the long screws that were removed with the side boards as this may damage the receiver.
3. Locate the supporting shelf at the height you wish the receiver positioned.
4. Remove the four bottom legs.
5. An air space must be made between the bottom of the set and the supporting shelf to assure good ventilation and cool operation. This space can be made by placing two boards which measure 9/16" thick by 1" to 2" width between chassis and the supporting shelf.
6. Cut out the cabinet panel in the dimensions of 4-7/8" x 16-1/32" as shown in below Panel Cutout. The bottom of the cutout should be flush with the bottom plate of the receiver, as shown in the side view. The distance between the bottom of the cutout and the top of the supporting shelf is 9/16".
7. The receiver is held in place by two bolts. The holes must be made in the shelf to correspond with the holes in the receiver. Use the "Top View" template to locate these holes on the supporting shelf. The holes should be made 1/4" in diameter or somewhat larger.

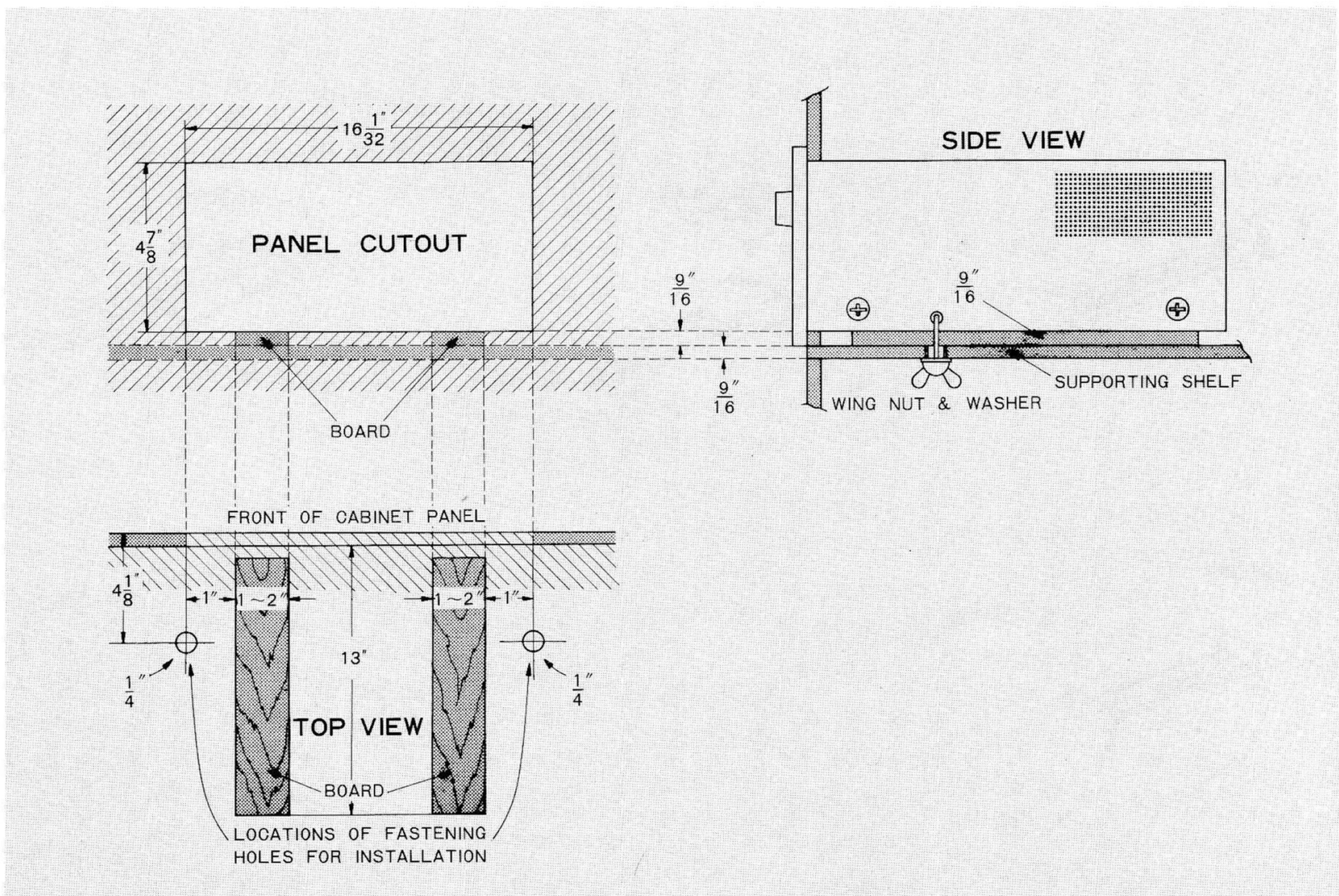

DIAL CORD/TRANSISTOR LEADS

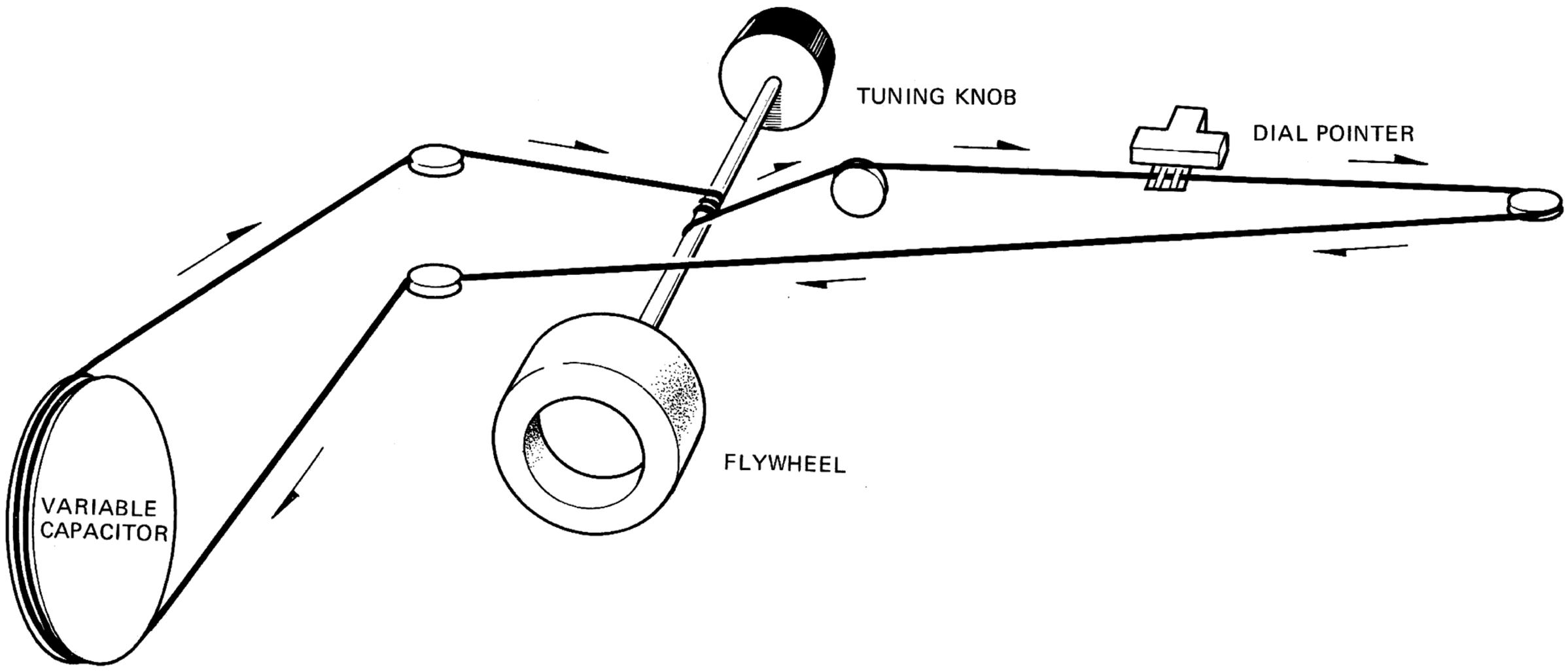

2SC1345

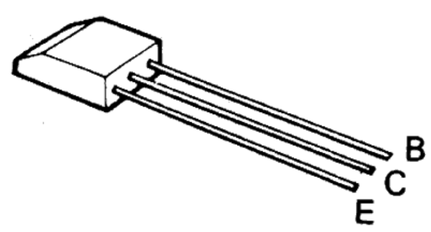

2SA493
2SC785R
2SC381R

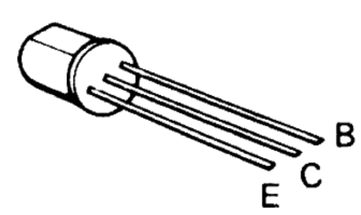

2SC738
2SC870

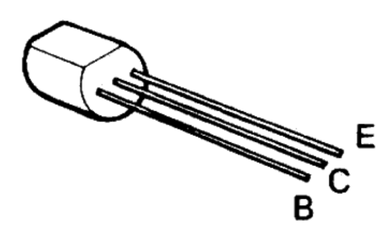

3SK30

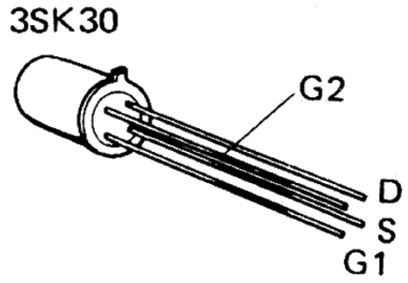

2SC1213A
2SA673A

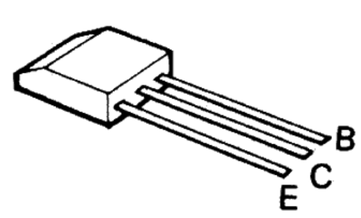

2SC789

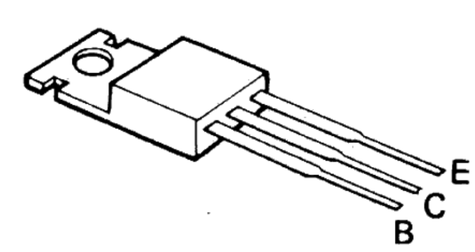

2SC945

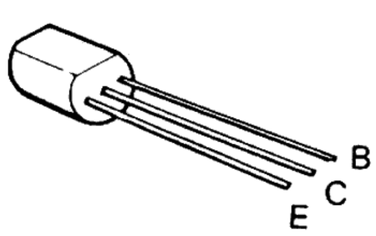

www.hifiengine.com

SUBSTITUTION TRANSISTORS

Tr. NAME	SUBSTITUTION Tr.
(X05-1020-10 or 61)	
3SK30 (B) or (C)	2SK19
2SC381 (R)	2SC380, 2SC460, 2SC535 (A) or (B), SE-3001
2SC785 (R)	–
2SC738 (B) or (C)	–
2SC870 (E) or (F)	–
2SC945	2SC733 (GR) or (BL), 2SC1213A (C)
(X09-1080-10)	
2SA493GR	2SA620WL5
2SC1213A (B) or (C)	2SC1212A (B) or (C)
2SA673 (B) or (C)	2SA743A (B) or (C)
2SC789	2SC1061
2SC1345 (D)	2SC1000 (GR)
2SC1345 (E) or (F)	2SC1000 (GR) or (BL)
2SC945 (Q) or (R)	2SC1213A (B) or (C)

www.hifiengine.com

PARTS LIST

Ref. No.	Parts No.	Description				Remarks
		CAPACITOR				
C100~105	CK45D1H561M	Ceramic	560pF	±20%		
C300	C90-0145-05	Polyester	0.01μF	±20%		
C301	CE04W1H101	Electrolytic	100μF	50WV		
C302	CE04W1A101	Electrolytic	100μF	10WV		
C303, 304	CQ93M1H224M	Mylar	0.22μF	±20%		
		RESISTOR				
R105, 106	RC05GF2H271K	Carbon	270Ω	±10%	1/2W	
R107~110	RC05GF2H100K	Carbon	10Ω	±10%	1/2W	
R111, 112	PD14BY2E104J	Carbon	100kΩ	±5%	1/4W	
R121	PD14BY2B104J	Carbon	100kΩ	±5%	1/8W	
R122	PD14BY2B394J	Carbon	390kΩ	±5%	1/8W	
R221	PD14BY2B104J	Carbon	100kΩ	±5%	1/8W	
R222	PD14BY2B394J	Carbon	390kΩ	±5%	1/8W	
R301	RC05GF2H270K	Carbon	27Ω	±10%	1/2W	
		POTENTIOMETER				
VR6	R01-4021-05	Potentiometer 50kΩ (MIC) with switch				
		SWITCH				
S3	S40-2035-05	Pushbutton (MODE)				
		MISCELLANEOUS				
—	A01-0204-02	Case				
—	A10-0361-01	Chassis				
—	A20-0664-02	Panel				
—	A30-0074-02	Dial board				
—	A40-0114-03	Bottom plate				
—	B20-0278-03	Dial calibrations				
—	B21-4010-15	Dial pointer				
—	B30-0064-15	Pilot lamp (50mA, BEACON)				
—	B30-0068-05	Pilot lamp (Meter)				
—	B30-0076-05	Pilot lamp (200mA) x 4				
—	B31-0143-15	Meter assembly				
—	B42-0009-04	Passed sticker				
—	B52-0151-00	Schematic diagram				
—	D01-0006-05	Flywheel				
—	D15-0034-05	Pulley (Dial)				
—	D15-0073-14	Pulley (Mid size)				
—	D15-0075-04	Pulley x 3				
—	D20-0092-15	Dial shaft				
—	E08-0221-05	AC outlet x 2				
—	E11-0002-05	Phone jack (PHONES)				
—	E11-0051-05	Phone jack (MIC)				
—	E13-0408-05	Pin jack (4P)				
—	E13-0409-15	Pin jack (4P with DIN)				
—	E20-0418-03	Terminal strips (4P)				
—	E20-0807-03	Terminal strips (8P)				
—	F19-0120-03	Wooden side board (L)				
—	F19-0121-03	Wooden side board (R)				
—	F99-0009-24	Slider				

www.hifiengine.com

PARTS LIST

Ref. No.	Parts No.	Description	Remarks
–	G01-0044-04	Dial spring	
–	J02-0049-14	Leg x 4	
–	J19-0288-34	Meter holder	
–	J19-0289-04	Front glass holder x 2	
–	J19-0302-33	Front glass holder	
–	J19-0343-04	Dial holder	
–	J21-0192-04	Amp stopper	
–	J21-0806-14	Antenna mounting hardware	
–	J25-0768-14	PC board (DIN)	
–	J25-0880-04	PC board (Fuse)	
–	K23-0102-03	Knob (MIC)	
–	K23-0130-03	Knob (TUNING)	
–	K23-0131-03	Knob (SELECTOR, TONE x 2, SPEAKERS) x 4	
–	K23-0132-03	Knob (Dual inside)	
–	K23-0133-04	Knob (Dual outside)	
–	K29-0160-04	Knob (Pushbutton) x 3	
–	T90-0002-05	FM indoor antenna	
–	T90-0026-05	Ferrite antenna	
–	X09-1080-10	Audio unit	

www.hifiengine.com

SUB PARTS LIST

Ref. No.	U. S. A.	Canada	PX	Australia	Europe	England	South Africa	Other area	Description
–	A20-0663-02	A20-0663-02	A20-0663-02	A20-0663-02	A20-0663-02	A20-0666-02	–	A20-0663-02	Panel assembly
–	A23-0397-02	A23-0397-02	A23-0398-02	A23-0400-02	A23-0399-02	A23-0400-02	–	A23-0398-02	Rear panel
–	B10-0121-02	B10-0121-02	B10-0121-02	B10-0121-02	B10-0121-02	B10-0122-02	–	B10-0121-02	Front glass
–	–	B40-0796-04	B40-0800-04	B40-0797-04	B40-0801-04	B40-0798-04	–	B40-0797-04	Model name plate
–	–	–	–	–	B41-0137-04	–	–	–	Fuse sticker (2AT) x 2
–	–	–	–	–	B41-0141-04	–	–	–	Fuse sticker (4AT)
–	B42-0383-04	B42-0383-04	–	–	–	–	–	–	Fuse sticker
–	–	–	–	–	B42-0024-04	–	–	–	SEV sticker
–	–	–	–	–	B42-0262-24	–	–	–	SEV sticker
–	B42-0359-04x2	B42-0359-04	–	–	–	–	–	–	Caution sticker
–	B46-0002-00	B46-0021-00	B46-0022-00	–	–	–	–	–	Warranty card
–	–	–	B46-0023-00	–	–	–	–	–	Warranty card
–	B50-0975-00	B50-0975-00	B50-0978-00	B50-0978-00	B50-0978-00	B50-0997-00	–	B50-0978-00	Instruction manual
–	B58-0043-00	B58-0043-00	–	–	–	–	–	–	Carton case caution card
–	–	–	B58-0139-00	B58-0003-00	B58-0156-00	B58-0003-00	–	B58-0003-00	Power supply caution card
–	–	–	B58-0146-00	B58-0108-00	B58-0108-00	B58-0108-00	–	B58-0108-00	Spare fuse caution card
–	–	–	B58-0144-00	B58-0101-00	B58-0157-00	B58-0101-00	–	B58-0101-00	Power voltage selector caution card
–	–	–	B59-0018-00	–	–	–	–	–	KENWOOD service stations' list
–	–	–	D32-0021-04	D32-0021-04	D32-0021-04	D32-0021-04	–	D32-0021-04	Switch stopper
–	E30-0181-05	E30-0181-05	E30-0034-05	E30-0185-05	E30-0176-05	–	–	E30-0034-05	Power cord
–	–	–	F05-1023-05	F05-1023-05	F06-1022-05	F05-1023-05	–	F05-1023-05	Fuse (1A)
–	F05-2021-05x1	F05-2023-05x1	F05-2023-05	F05-2023-05	F06-2021-05	F05-2023-05	–	F05-2023-05	Fuse (2A) x 3
–	F06-2022-05	F06-2022-05	–	–	–	–	–	–	Fuse (2A, lead type) x 2
–	F05-4026-05	F05-4026-05	F05-4022-05	F05-4022-05	F05-4025-05	F05-4022-05	–	F05-4022-05	Fuse (4A)
–	–	–	–	–	F07-0309-04	–	–	–	AC outlet cover
–	H01-0975-04	H01-0975-04	H01-0975-04	H01-0975-04	H01-0975-04	H01-0976-04	–	H01-0975-04	Carton case
–	H03-0240-04	H03-0240-04	–	H03-0240-04	H03-0241-04	H03-0242-04	–	H03-0240-04	Carton case
–	J13-0033-15	J13-0033-15	J13-0033-15	J13-0033-15	J13-0031-05	J13-0033-15	–	J13-0033-15	Fuse holder
–	J13-0034-05x4	J13-0034-05x4	J13-0034-05x7	J13-0034-05x7	J13-0034-05x4	J13-0034-05x7	–	J13-0034-05x7	Fuse holder
–	–	–	–	–	J13-0032-05x3	–	–	–	Fuse holder
–	L03-0084-05	L05-0029-05	L03-0084-05	L03-0084-05	L06-0018-05	L03-0084-05	–	L03-0084-05	Power transformer
S1	S05-1028-05	S05-1028-05	S05-1029-05	S05-1029-05	S05-1029-05	S05-1029-05	–	S05-1029-05	Rotary switch (POWER)
–	–	–	S31-2001-05	S31-2001-05	S31-2001-05	S31-2001-05	–	S31-2001-05	Slide switch (Power voltage selector)
R300	RC05GF2H225K	RC05GF2H225K	–	–	–	–	–	–	Carbon resistor 2.2 MΩ ±10% 1/2W
–	X05-1020-10	X05-1020-10	X05-1020-10	X05-1020-10	X05-1020-61	X05-1020-10	–	X05-1020-61	TUNER unit

www.hifiengine.com

TUNER (X05-1020-10 or 61) PARTS LIST

Ref. No.	Parts No.	Description			Remarks
		CAPACITOR			
Cg1	CC94SL1H060D	Ceramic	6pF	±0.5pF	
Cg2	CC94SL1H101K	Ceramic	100pF	±10%	
Cg3	CC94SL1H020C	Ceramic	2pF	±0.25pF	
Cg4, 5	CK94YG1E103Z	Ceramic	0.01μF	+80%, −20%	
Cg6	CC94SH1H330K	Ceramic	33pF	±10%	
Cg7	CC94TH1H100D	Ceramic	10pF	±0.5pF	
Cg8	CC94SL1H050D	Ceramic	5pF	±0.5pF	
Cg9	CC94TH1H100D	Ceramic	10pF	±0.5pF	
Cg10	CK94YX1H471K	Ceramic	470pF	±10%	
Cg11	CC94SL1H050D	Ceramic	5pF	±0.5pF	
Cg12	CQ93M1H103K	Mylar	0.01μF	±10%	
Cg13	CK94YG1E403Z	Ceramic	0.04μF	+80%, −20%	
Cg14	CC94SL1H100D	Ceramic	10pF	±0.5pF	
Cg15	CK94YY1H102M	Ceramic	0.001μF	±20%	
Cg16	CQ93M1H223K	Mylar	0.022μF	±10%	
Cg17	CQ93M1H682J	Mylar	0.0068μF	±5%	
Cg18	CQ08S1H331J	Polystyrene	330pF	±5%	
Cg19, 20	CK94YG1E203Z	Ceramic	0.02μF	+80%, −20%	
Cg21	CE04W1A100	Electrolytic	10μF	10WV	
Cg22	CK94YG1E203Z	Ceramic	0.02μF	+80%, −20%	
Cg23, 24	CQ08S1H102J	Polystyrene	0.001μF	±5%	
Cg25	CK94YG1E203Z	Ceramic	0.02μF	+80%, −20%	
Cg26	CK94YX1H471K	Ceramic	470pF	±10%	
Cg27	CQ93M1H223K	Myalr	0.022μF	±10%	
Cg28	CE04W0J221	Electrolytic	220μF	6.3WV	
Cg29	CC94SL1H151K	Ceramic	150pF	±10%	
Cg30	CK94YG1E403Z	Ceramic	0.04μF	+80%, −20%	
Cg31	CC94SL1H050D	Ceramic	5pF	±0.5pF	
Cg32	CQ08S1H102J	Polystyrene	0.001μF	±5%	
Cg33	CK94YG1E103Z	Ceramic	0.01μF	+80%, −20%	
Cg34	CC94SL1H101K	Ceramic	100pF	±10%	
Cg35	CK94YY1H102M	Ceramic	0.001μF	±20%	
Cg36	CK94YY1H472M	Ceramic	0.0047μF	±20%	
Cg37	CK94YG1E403Z	Ceramic	0.04μF	+80%, −20%	
Cg38	CE04W1C101	Electrolytic	100μF	16WV	
Cg39	CE04W1A100	Electrolytic	10μF	10WV	
Cg40	CQ93M1H223K	Mylar	0.022μF	±10%	
Cg41, 42	CC94TH1H100D	Ceramic	10pF	±0.5pF	
Cg43	CC94TH1H500K	Ceramic	50pF	±10%	
Cg44	CC94TH1H200K	Ceramic	20pF	±10%	
Cg45	CK94YY1H472M	Ceramic	0.0047μF	±20%	
Cg46	CQ93M1H223K	Mylar	0.022μF	±10%	
Cg47	CK94YX1H361K	Ceramic	360pF	±10%	
Cg48	CC94TH1H070D	Ceramic	7pF	±0.5pF	
Cg49	CK94YG1E203Z	Ceramic	0.02μF	+80%, −20%	
Cg50	CE04W1H010	Electrolytic	1μF	50WV	
Cg51	CE04W1A100	Electrolytic	10μF	10WV	
Cg52	CQ08S1H472J	Polystyrene	0.0047μF	±5%	
Cg53	CQ08S1H662J	Polystyrene	0.0066μF	±5%	
Cg54	CE04W1V220	Electrolytic	22μF	35WV	
Cg55	CK94YG1E403Z	Ceramic	0.04μF	+80%, −20%	
Cg56	CQ08S1H471J	Polystyrene	470pF	±5%	
Cg57	CE04W1A100	Electrolytic	10μF	10WV	
Cg58	CQ08S1H472J	Polystyrene	0.0047μF	±5%	
Cg59	CE04W1H010	Electrolytic	1μF	50WV	
Cg60	CS04E1ER10M	Tantalum	0.1μF	25WV	

www.hifiengine.com

TUNER (X05-1020-10 or 61) PARTS LIST

Ref. No.	Parts No.	Description				Remarks
Cg61, 62	CK94YX1H471K	Ceramic	470pF	±10%		
Cg63	CS04E1ER10M	Tantalum	0.1μF	25WV		
Cg64, 65	CQ93M1H682J	Mylar	0.0068μF	±5%		(X05-1020-10)
	CQ93M1H472J	Mylar	0.0047μF	±5%		(X05-1020-61)
Cg66	CE04W1E100	Electrolytic	10μF	25WV		
Cg67, 68	CQ08S1H101J	Polystyrene	100pF	±5%		
Cg69	CK94YG1E103Z	Ceramic	0.01μF	+80%, −20%		
Cg70	CK94YG1E403Z	Ceramic	0.04μF	+80%, −20%		
		RESISTOR				
Rg1, 2	PD14BY2B104J	Carbon	100kΩ	±5%	1/8W	
Rg3	PD14BY2B330J	Carbon	33Ω	±5%	1/8W	
Rg4, 5	PD14BY2B562J	Carbon	5.6kΩ	±5%	1/8W	
Rg6	PD14BY2B123J	Carbon	12kΩ	±5%	1/8W	
Rg7	PD14BY2B103J	Carbon	10kΩ	±5%	1/8W	
Rg8	PD14BY2B471J	Carbon	470Ω	±5%	1/8W	
Rg9	PD14BY2B103J	Carbon	10kΩ	±5%	1/8W	
Rg10, 11	PD14BY2B102J	Carbon	1kΩ	±5%	1/8W	
Rg12	PD14BY2B332J	Carbon	3.3kΩ	±5%	1/8W	
Rg13	PD14BY2B224J	Carbon	220kΩ	±5%	1/8W	
Rg14	PD14BY2B154J	Carbon	150kΩ	±5%	1/8W	
Rg15	PD14BY2B103J	Carbon	10kΩ	±5%	1/8W	
Rg16	PD14BY2B222J	Carbon	2.2kΩ	±5%	1/8W	
Rg17	PD14BY2B470J	Carbon	47Ω	±5%	1/8W	
Rg18	PD14BY2B682J	Carbon	6.8kΩ	±5%	1/8W	
Rg19	PD14BY2B472J	Carbon	4.7kΩ	±5%	1/8W	
Rg20	PD14BY2B182J	Carbon	1.8kΩ	±5%	1/8W	
Rg21, 22	PD14BY2B122J	Carbon	1.2kΩ	±5%	1/8W	
Rg23, 24	PD14BY2B223J	Carbon	22kΩ	±5%	1/8W	
Rg25	PD14BY2B562J	Carbon	5.6kΩ	±5%	1/8W	
Rg26	PD14BY2B223J	Carbon	22kΩ	±5%	1/8W	
Rg27	PD14BY2B102J	Carbon	1kΩ	±5%	1/8W	
Rg28	PD14BY2B332J	Carbon	3.3kΩ	±5%	1/8W	
Rg29	PD14BY2B680J	Carbon	68Ω	±5%	1/8W	
Rg30	PD14BY2B103J	Carbon	10kΩ	±5%	1/8W	
Rg31	PD14BY2B393J	Carbon	39kΩ	±5%	1/8W	
Rg32	PD14BY2B223J	Carbon	22kΩ	±5%	1/8W	
Rg33	PD14BY2B103J	Carbon	10kΩ	±5%	1/8W	
Rg34	PD14BY2B102J	Carbon	1kΩ	±5%	1/8W	
Rg35	PD14BY2B473J	Carbon	47kΩ	±5%	1/8W	
Rg36	PD14BY2B221J	Carbon	220Ω	±5%	1/8W	
Rg37	PD14BY2B103J	Carbon	10kΩ	±5%	1/8W	
Rg38	PD14BY2B102J	Carbon	1kΩ	±5%	1/8W	
Rg39	PD14BY2B683J	Carbon	68kΩ	±5%	1/8W	
Rg40	PD14BY2B103J	Carbon	10kΩ	±5%	1/8W	
Rg41	PD14BY2B562J	Carbon	5.6kΩ	±5%	1/8W	
Rg42, 43	PD14BY2B224J	Carbon	220kΩ	±5%	1/8W	
Rg44	PD14BY2B472J	Carbon	4.7kΩ	±5%	1/8W	
Rg45	PD14BY2B223J	Carbon	22kΩ	±5%	1/8W	
Rg46	PD14BY2B222J	Carbon	2.2kΩ	±5%	1/8W	
Rg47	PD14BY2B101J	Carbon	100Ω	±5%	1/8W	
Rg48	PD14BY2B223J	Carbon	22kΩ	±5%	1/8W	
Rg49	PD14BY2B103J	Carbon	10kΩ	±5%	1/8W	
Rg50	PD14BY2B221J	Carbon	220Ω	±5%	1/8W	
Rg51	PD14BY2B152J	Carbon	1.5kΩ	±5%	1/8W	
Rg52	PD14BY2B224J	Carbon	220kΩ	±5%	1/8W	
Rg53, 54	PD14BY2B103J	Carbon	10kΩ	±5%	1/8W	

www.hifiengine.com

TUNER (X05-1020-10 or 61) PARTS LIST

Ref. No.	Parts No.	Description				Remarks
Rg55 56	PD14BY2B224J	Carbon	220kΩ	±5%	1/8W	
Rg57, 58	PD14BY2B103J	Carbon	10kΩ	±5%	1/8W	
Rg59	PD14BY2B224J	Carbon	220kΩ	±5%	1/8W	
Rg60, 61	PD14BY2B823J	Carbon	82kΩ	±5%	1/8W	
Rg62, 63	PD14BY2B152J	Carbon	1.5kΩ	±5%	1/8W	
Rg64	RC05GF2H102J	Carbon	1kΩ	±5%	1/2W	
Rg65	PD14BY2B102J	Carbon	1kΩ	±5%	1/8W	
MULTIPLE COMPONENTS						
CRg1	R90-0089-05	Ceramic based multiple components (0.01μF + 470Ω)				
CRg2	R90-0082-08	Ceramic based multiple components (0.01μF + 1kΩ)				
CRg3	R90-0079-05	Ceramic based multiple components (0.022μF + 1kΩ)				
CRg4	R90-0080-05	Ceramic based multiple components (0.022μF + 1kΩ)				
CRg5	R90-0081-05	Ceramic based multiple components (0.022μF + 560Ω)				
CRg6	R90-0083-05	Ceramic based multiple components (discriminator)				
CRg7	R90-0088-05	Ceramic based multiple components (0.01μF + 220Ω)				
COIL & TRANS.						
Tg1	L34-0348-04	FM antenna coil				
Tg2	L34-0056-04	FM-RF coil				
Tg3	L72-0012-05	Ceramic filter				
Tg4	L30-0216-05	FM IFT				
Tg5	L30-0080-05	AM IFT				
Tg6	L30-0218-05	FM IFT				
Tg7	L30-0219-05	AM IFT				
Tg8	L30-0220-05	FM IFT				
Tg9	L30-0052-05	AM IFT				
Tg10	L34-0057-04	FM-OSC trans.				
Tg11	L30-0082-05	AM-OSC trans.				
Tg12	L35-0044-05	19kHz coil				
Tg13	L35-0049-05	38kHz coil				
Tg14	L35-0050-05	67kHz coil				
Lg1	L33-0027-05	Choke coil				
La2	L33-0002-05	Choke coil				
Lg3	L33-0086-05	Ferri-inductor				
Lg4	L33-0089-05	Ferri-inductor				
Lg5~9	L33-0086-05	Ferri-inductor				
Lg10	L33-0117-05	Ferri-inductor				
SEMICONDUCTOR						
Qg1		3SK30 (B) or (C)				
Qg2~5		2SC381 (R)				
Qg6		2SC785 (R)				
Qg7		2SC738 (B) or (C)				
Qg8		2SC870 (E) or (F)				
Qg9		2SC945 (P) or (Q)				
Qg10		2SC870 (E) or (F)				
Qg11		2SC945 (P) or (Q)				
Dg1, 2		1N60 or 1N34A				
Dg3		1S1555				
Dg4		1N60 or 1N34A				
Dg5, 6		1S1555				
Dg7~21		1N60 or 1N34A				
Dg22		1S1555				
Zg1		DZ-140				

www.hifiengine.com

TUNER (X05-1020-10 or 61) PARTS LIST

Ref. No.	Parts No.	Description	Remarks
		POTENTIOMETER	
VRg1	R12-5013-05	PC trimmer 100kΩ (B)	
		MISCELLANEOUS	
VC	C01-0136-05	Variable capacitor	
CTg3	C05-0010-15	Ceramic trimmer	
—	F10-0187-04	Shield plate (B) x 2	
—	F10-0229-03	Shield plate (C)	
—	F10-0233-04	Shield plate (D)	

www.hifiengine.com

AUDIO (X09-1080-10) PARTS LIST

Ref. No.	Parts No.	Description				Remarks
		CAPACITOR				
Ce1, 2	CS04D0J3R3M	Tantalum	3.3μF	6.3WV		
Ce3, 4	CC45SL1H100D	Ceramic	10pF	±0.5pF		
Ce5, 6	CE04W0F101	Electrolytic	100μF	3.15W		
Ce7	CQ93M1H332K	Mylar	0.0033μF	±10%		
Ce8	CQ93M1H123K	Mylar	0.012μF	±10%		
Ce9	CQ93M1H332K	Mylar	0.0033μF	±10%		
Ce10	CQ93M1H123K	Mylar	0.012μF	±10%		
Ce11~14	CC45SL1H101K	Ceramic	100pF	±10%		
Ce15, 16	CE04W1E330	Electrolytic	33μF	25WV		
Ce17, 18	CE04W1H010	Electrolytic	1μF	50WV		
Ce19, 20	CQ93M1H333K	Mylar	0.033μF	±10%		
Ce21, 22	CQ93M1H104K	Mylar	0.1μF	±10%		
Ce23, 24	CE04W1V331	Electrolytic	330μF	35WV		
Ce25~28	CE04W1E470	Electrolytic	47μF	25WV		
Ce29, 30	CQ93M1H822K	Mylar	0.0082μF	±10%		
Ce31~34	CQ93M1H683K	Mylar	0.068μF	±10%		
Ce35, 36	CS15E1E010M	Tantalum	1μF	25WV		In series
	CS15E1E2R2M	Tantalum	2.2μF	25WV		In series
Ce37, 38	CC45SL1H470K	Ceramic	47pF	±10%		
Ce39, 40	CE04W1E470	Electrolytic	47μF	25WV		
Ce41, 42	CE02W1V102	Electrolytic	1000μF	35WV		
Ce43, 44	CK45E2H103P	Ceramic	0.01μF	+100%, −0%		
Ce45	C90-0148-05	Electrolytic	2200μF	50WV		
Ce46	CE04W1H010	Electrolytic	1μF	50WV		
Ce47	CK45D1H561M	Ceramic	560pF	±20%		
Ce48	CE04W1E330	Electrolytic	33μF	25WV		
Ce49	CC45SL1H680K	Ceramic	68pF	±10%		
Ce50	CE04W1H010	Electrolytic	1μF	50WV		
Ce51	CE04W0F470	Electrolytic	47μF	6.3WV		
Ce52	CE04W1H010	Electrolytic	1μF	50WV		
Ce53	CK45D1H561M	Ceramic	560pF	±20%		
Ce54	CE04W1E010	Electrolytic	1μF	25WV		
Ce55	CE04W0F101	Electrolytic	100μF	3.15WV		
Ce56	CE04W1H101	Electrolytic	100μF	50WV		
Ce59	CE04W1E101	Electrolytic	100μF	25WV		
Ce60	CE04W1E330	Electrolytic	33μF	25WV		
Ce61, 62	CK45D1H331M	Ceramic	330pF	±20%		
Ce63, 64	CC45SL1H100D	Ceramic	10pF	±0.5pF		
Ce65	CK45F1H403Z	Ceramic	0.04μF	+80%, −20%		
Ce66, 67	CC45SL1H470K	Ceramic	47pF	±10%		
Ce68	CK45D1H561M	Ceramic	560pF	±20%		
		RESISTOR				
Re1, 2	PD14BY2E222J	Carbon	2.2kΩ	±5%	1/4W	
Re3, 4	PD14BY2E104J	Carbon	100kΩ	±5%	1/4W	
Re5, 6	PD14BY2E683J	Carbon	68kΩ	±5%	1/4W	
Re7, 8	PD14BY2E561J	Carbon	560Ω	±5%	1/4W	
Re9, 10	PD14BY2E124J	Carbon	120kΩ	±5%	1/4W	
Re11, 12	PD14BY2E103J	Carbon	10kΩ	±5%	1/4W	
Re13, 14	PD14BY2E682J	Carbon	6.8kΩ	±5%	1/4W	
Re15, 16	PD14BY2E681J	Carbon	680Ω	±5%	1/4W	
Re17, 18	PD14BY2E273J	Carbon	27kΩ	±5%	1/4W	
Re19, 20	PD14BY2E103J	Carbon	10kΩ	±5%	1/4W	
Re21	PD14BY2E223J	Carbon	22kΩ	±5%	1/4W	
Re22	PD14BY2E103J	Carbon	10kΩ	±5%	1/4W	
Re23	PD14BY2E224J	Carbon	220kΩ	±5%	1/4W	

www.hifiengine.com

AUDIO (X09-1080-10) PARTS LIST

Ref. No.	Parts No.	Description				Remarks
Re24	PD14BY2E223J	Carbon	22kΩ	±5%	1/4W	
Re25	PD14BY2E224J	Carbon	220kΩ	±5%	1/4W	
Re26, 27	PD14BY2E183J	Carbon	18kΩ	±5%	1/4W	
Re28	PD14BY2E104J	Carbon	100kΩ	±5%	1/4W	
Re29, 30	PD14BY2E394J	Carbon	390kΩ	±5%	1/4W	
Re31	PD14BY2E104J	Carbon	100kΩ	±5%	1/4W	
Re32	PD14BY2E561J	Carbon	560Ω	±5%	1/4W	
Re33	PD14BY2E272J	Carbon	2.7kΩ	±5%	1/4W	
Re34	PD14BY2E561J	Carbon	560Ω	±5%	1/4W	
Re35	PD14BY2E272J	Carbon	2.7kΩ	±5%	1/4W	
Re36, 37	PD14BY2E473J	Carbon	47kΩ	±5%	1/4W	
Re38, 39	PD14BY2E182J	Carbon	1.8kΩ	±5%	1/4W	
Re40, 41	PD14BY2E101J	Carbon	100Ω	±5%	1/4W	
Re42, 43	PD14BY2E122J	Carbon	1.2kΩ	±5%	1/4W	
Re44, 45	PD14BY2E333J	Carbon	33kΩ	±5%	1/4W	
Re46, 47	PD14BY2E182J	Carbon	1.8kΩ	±5%	1/4W	
Re48, 49	PD14BY2E331J	Carbon	330Ω	±5%	1/4W	
Re50, 51	PD14BY2E472J	Carbon	4.7kΩ	±5%	1/4W	
Re52, 53	PD14BY2E152J	Carbon	1.5kΩ	±5%	1/4W	
Re54~57	PD14BY2E222J	Carbon	2.2kΩ	±5%	1/4W	
Re58, 59	PD14BY2E471JB	Carbon	470Ω	±5%	1/4W	
Re60, 61	PD14BY2E100JB	Carbon	10Ω	±5%	1/4W	
Re62, 63	PD14BY2E471J	Carbon	470Ω	±5%	1/4W	
Re64, 65	RN14AB3DR47KB	Metal film	0.47Ω	±10%	2W	
Re66	PD14BY2E102J	Carbon	1kΩ	±5%	1/4W	
Re67	PD14BY2E223J	Carbon	22kΩ	±5%	1/4W	
Re68	PD14BY2E224J	Carbon	220kΩ	±5%	1/4W	
Re69	PD14BY2E334J	Carbon	330kΩ	±5%	1/4W	
Re70	PD14BY2E473J	Carbon	47kΩ	±5%	1/4W	
Re71	PD14BY2E560J	Carbon	56Ω	±5%	1/4W	
Re72	PD14BY2E223J	Carbon	22kΩ	±5%	1/4W	
Re73	PD14BY2E562J	Carbon	5.6kΩ	±5%	1/4W	
Re74	PD14BY2E561J	Carbon	560Ω	±5%	1/4W	
Re75	PD14BY2E334J	Carbon	330kΩ	±5%	1/4W	
Re76	PD14BY2E474J	Carbon	470kΩ	±5%	1/4W	
Re77	PD14BY2E562J	Carbon	5.6kΩ	±5%	1/4W	
Re78, 79	PD14BY2E103J	Carbon	10kΩ	±5%	1/4W	
Re80	PD14BY2E181J	Carbon	180Ω	±5%	1/4W	
Re81, 82	PD14BY2E103J	Carbon	10kΩ	±5%	1/4W	
Re83	PD14BY2E273J	Carbon	27kΩ	±5%	1/4W	
Re84	PD14BY2E103J	Carbon	10kΩ	±5%	1/4W	
Re85	PD14BY2E393J	Carbon	39kΩ	±5%	1/4W	
Re86	PD14BY2E273J	Carbon	27kΩ	±5%	1/4W	
Re87	RC05GF2H220K	Carbon	22Ω	±10%	1/2W	
Re88, 89	PD14BY2E273J	Carbon	27kΩ	±5%	1/4W	
Re90	PD14BY2E821J	Carbon	820Ω	±5%	1/4W	
Re91	RN14AB3D102K	Metal film	1kΩ	±10%	2W	
Re95	PD14BY2E122J	Carbon	1.2kΩ	±5%	1/4W	
Re97	PD14BY2E151J	Carbon	150Ω	±5%	1/4W	
Re98	RN14AB3D561KB	Metal film	560Ω	±10%	2W	
		SEMICONDUCTOR				
Qe1, 2		2SC1345 (D)				
Qe3, 4		2SC1345 (E) or (F)				
Qe5, 6		2SA493 (GR)				

www.hifiengine.com

AUDIO (X09-1080-10) PARTS LIST

Ref. No.	Parts No.	Description	Remarks
Qe7, 8		2SC1213A (C)	
Qe9, 10		2SC1213A (B) or (C)	
Qe11, 12		2SA673A (B) or (C)	
Qe13~16		2SC789	
Qe17		2SA493 (GR)	
Qe18, 19		2SC1345 (E) or (F)	
Qe20, 21		2SC945 (Q) or (R)	
Qe22		2SC1213A (B) or (C)	
De1		1S1555	
De2, 3		MV-13	
De4~6		1S1555	
De7, 8		V03C	
De9, 10		V06B	
De11		1S2076A or 1S1554	
De12		1N60	
THe1, 2		5T-31L	
		POTENTIOMETER	
VRe1	R12-2016-05	PC trimmer 5kΩ (B) (SEPARATION)	
VRe2	R08-5021-05	Potentiometer 100kΩ (B) dual (VOLUME)	
VRe3, 4	R08-3011-05	Potentiometer 10k (C) dual (TONE)	
VRe5, 6	R12-0047-05	PC trimmer 500Ω (B) (BIAS)	
		SWITCH	
S2	S29-3004-15	Rotary (SELECTOR)	
S4	S40-2033-05	Pushbutton (MONITOR)	
S5	S40-2034-05	Pushbutton (LOUDNESS)	
		MISCELLANEOUS	
—	F01-0152-03	Heat sink	
—	F20-0078-05	Mica plate x 4	
—	J19-0344-03	PC board stopper	

www.hifiengine.com

PC BOARD

▶ TUNER UNIT
(X05-1020-10)

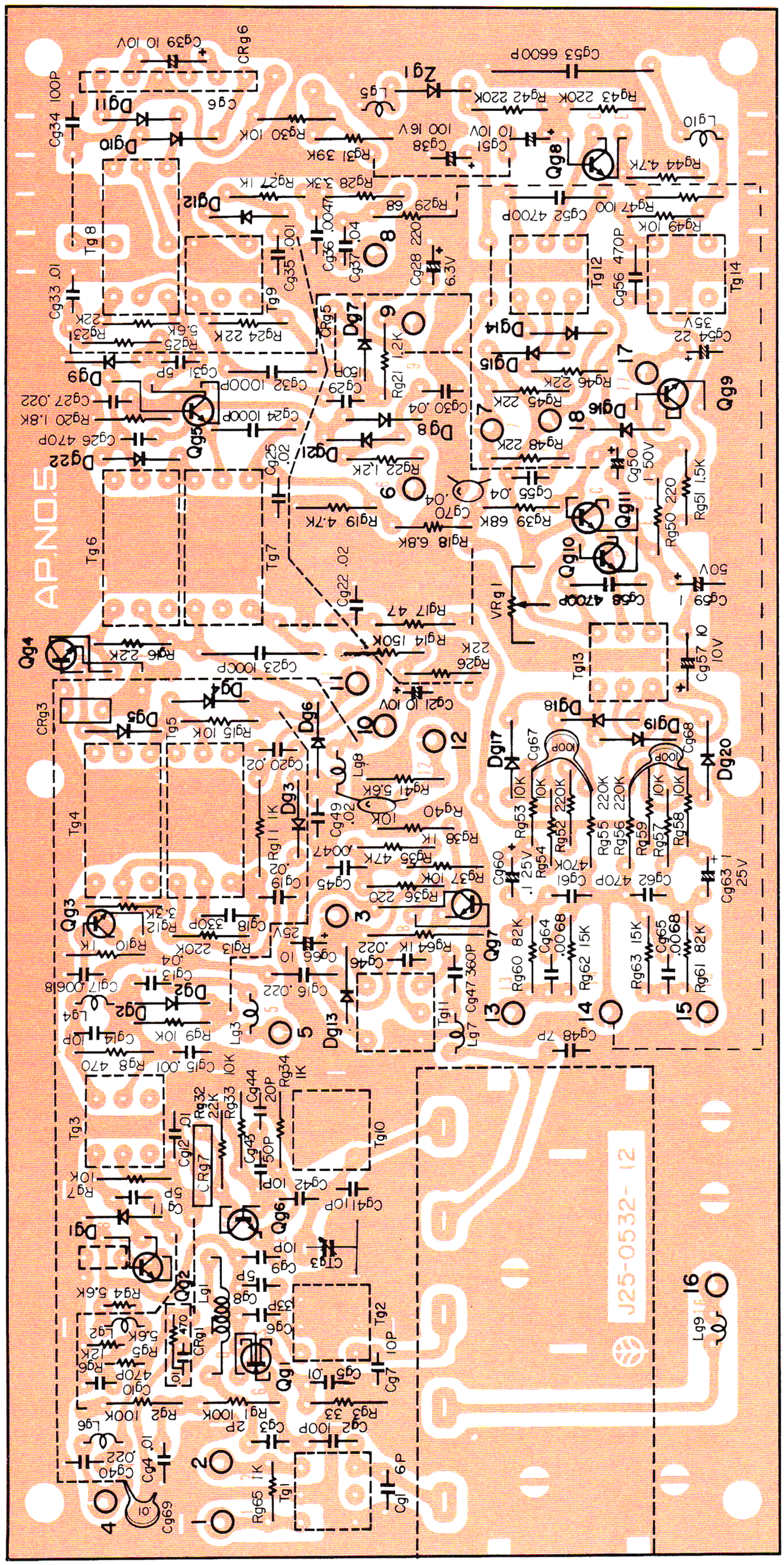

Dg3: 1S1555,
Dg4: 1N60 or 1N34A,
Dg5~6: 1S1555,

Dg7~21: 1N60 or 1N34A,
Dg22: 1S1555,
Zg1: DZ-140

Qg1: 3SK30 (B) or (C),
Qg2~5: 2SC381 (R),
Qg6: 2SC785 (R),

Qg7: 2SC738 (B) or (C),
Qg8: 2SC870 (E) or (F),
Qg9: 2SC945 (P) or (Q),

Qg10: 2SC870 (E) or (F),
Qg11: 2SC945 (P) or (Q),
Dg1~2: 1N60 or 1N34A,

PC BOARD

▶ **AUDIO UNIT (X09-1080-10)**

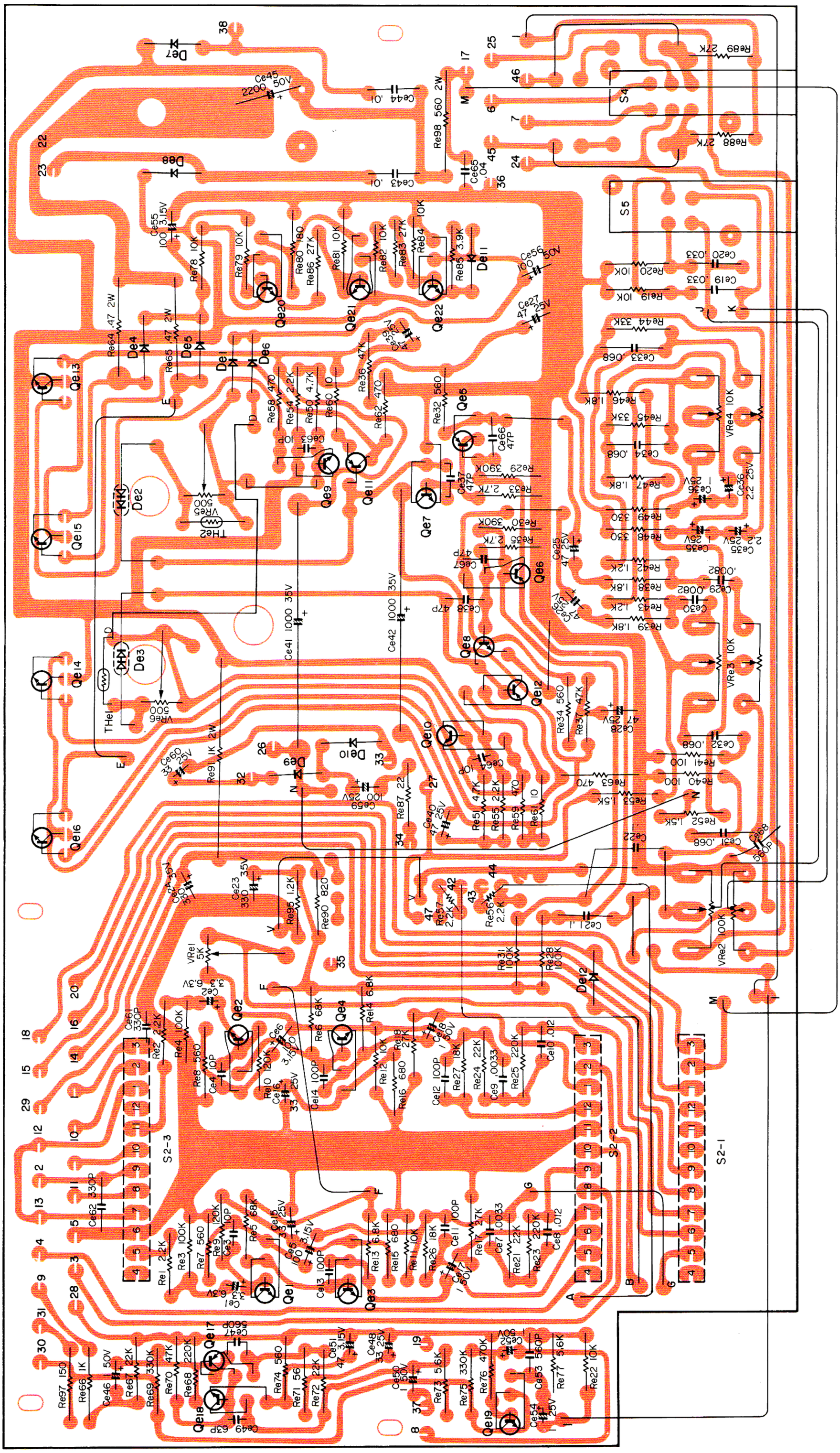

Qe1, 2: 2SC1345 (D),
Qe3, 4, 18, 19: 2SC1345 (E) or (F),
Qe5, 6, 17 : 2SA493 GR,

Qe7, 8: 2SC1213A,
Qe9, 10, 22: 2SC1213A (B) or (C),
Qe11, 12: 2SA673A (B) or (C),

Qe20, 21: 2SC945 Q or R,
THe1, 2: 5T-31L
De1, 4, 5, 6: 1S1555,

De2, 3: MV13,
De7, 8: V03C,
De9, 10: V06B,

De11: 1S2076A or 1S1554,
De12: 1N60

BLOCK DIAGRAM

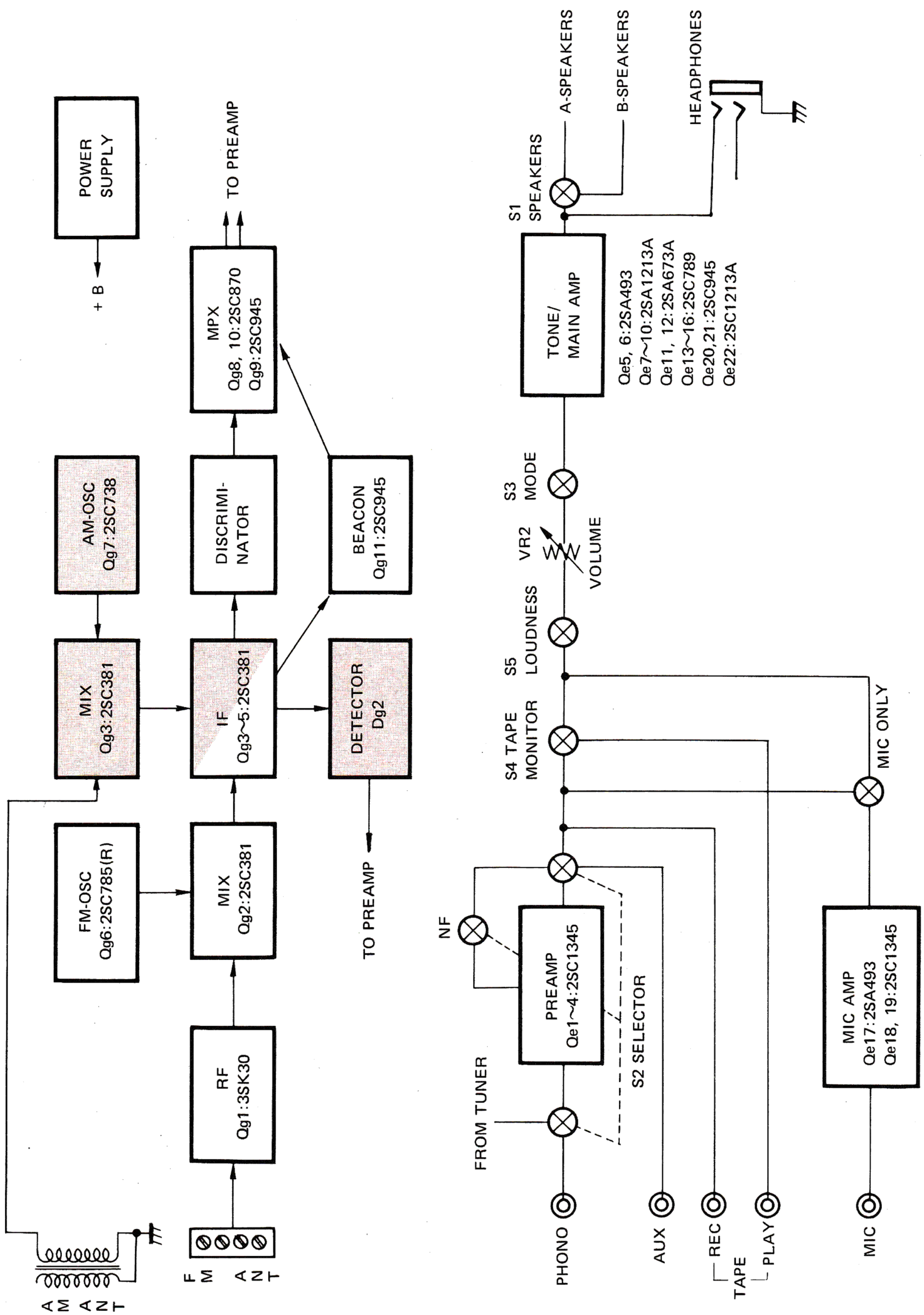

SCHEMATIC DIAGRAM

Caution: The red screen in schematic diagram means that the unit is different for every country, therefore refer to the SUB PARTS LIST in this manual.

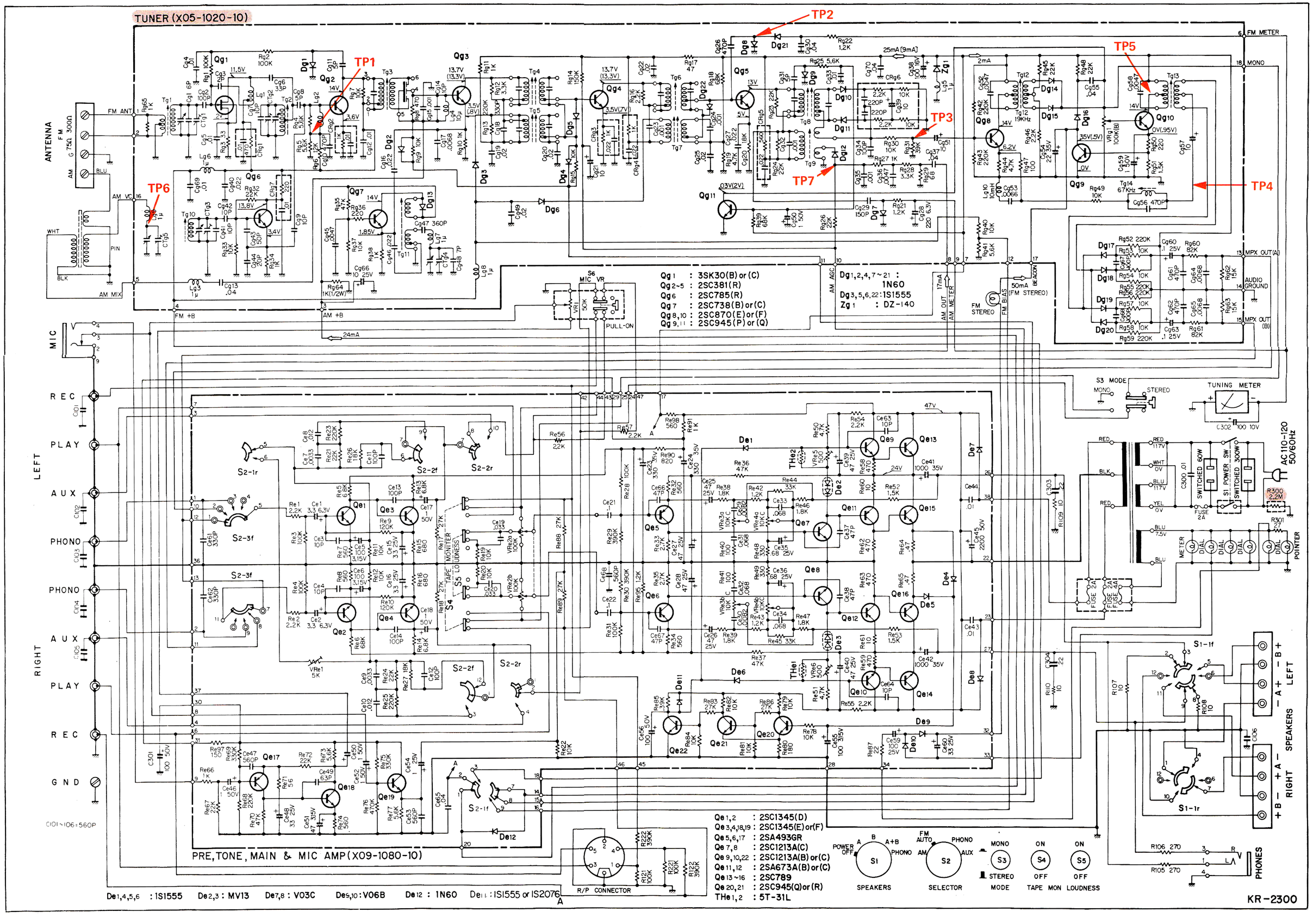

SPECIFICATIONS

FM TUNER SECTION

Antenna Impedance	300 ohms balanced & 75 ohms unbalanced
Usable Sensitivity (IHF)	2.5 μV
Harmonic Distortion	Mono 0.8% at 400 Hz 100% mod. Stereo 1.0% at 400 Hz 100% mod.
Signal to Noise Ratio (IHF)	Better than 60 dB.
Capture Ratio	4.0 dB.
Selectivity (Alt. CH) (IHF)	40 dB.
Image Rejection	50 dB.
IF Rejection	95 dB.
Spurious Signal Rejection	80 dB.
AM Suppression	45 dB.
Stereo Separation	30 dB at 1 kHz
Sub Carrier Suppression	40 dB.
Front End.	1 FET. 3 Gang

AM TUNER SECTION

Antenna	Built-in ferrite bar antenna and external antenna terminals
Usable Sensitivity (IHF)	25 μV.
Signal to Noise Ratio	45 dB.
Selectivity (IHF)	25 dB.
Image Rejection	45 dB.
I.F. Rejection	35 dB.
Front End	2 Gang.
I.F. Stage	2 stage.

AMPLIFIER SECTION

Dynamic Power	44 watts into 8 ohms.	
	40 watts into 8 ohms. (America and Canada)	
	64 watts into 4 ohms.	
	55 watts into 4 ohms. (America and Canada)	
RMS Power Output		
both channels driven	14 x 2 watts into 8 ohms at 1 kHz.	
	15 x 2 watts into 4 ohms at 1 kHz.	
each channel driven	17 x 2 watts into 8 ohms at 1 kHz.	
	22 x 2 watts into 4 ohms at 1 kHz.	
Total Harmonic Distortion	1.0% at rated power, 0.2% at 1/2 rated power into 8 ohms at 1 kHz.	
Intermodulation Distortion	1.0% at rated power.	
Power Bandwidth	30 Hz ~ 50 kHz.	
Damping Factor	30 at 8 ohms.	
Speaker Impedance	Accept 4 ohms to 16 ohms.	
Headphone Impedance	Accept 4 ohms to 16 ohms.	
Input Sensitivity and Impedance		
PHONO	3.0 mV	50 K ohms.
MIC	4.5 mV	20 K ohms.
AUX	120 mV	30 K ohms.
TAPE PLAY	120 mV	30 K ohms.
Signal to Noise Ratio		
PHONO	65 dB.	
AUX	70 dB.	
TAPE PLAY	70 dB.	
MIC	60 dB.	
Tone Control		
BASS	± 8 dB at 100 Hz.	
TREBLE	± 8 dB at 10 kHz.	
Loudness Control (At −30 dB)	+ 8 dB at 100 Hz.	
Frequency Response		
TUNER, AUX, TAPE PLAY	25 Hz ~ 50 kHz, ±2 dB.	

GENERAL

Switches	
Input Selector	AM, FM AUTO, PHONO, AUX.
Speakers	POWER OFF, A, B, A + B, PHONES.
Mode	MONO, STEREO.
Others	TAPE MON. LOUDNESS, MIC jack with VR.
AC Outlets	Switched 1, Unswitched 1
Power Consumption	110 watts at full power, 18 watts at no signal.
Dimensions	W 17-3/4" (450 mm), H 5-5/8" (144 mm), D 13-7/8" (335 mm).
Weight	20.7 lbs (9.4 Kg)

www.hifiengine.com

KENWOOD ELECTRONICS, INC.

- 15777 SOUTH BROADWAY, GARDENA, CALIFORNIA 90248 U.S.A.
- 72-02 51ST AVENUE, WOODSIDE. N.Y. 11377 U.S.A.

TRIO KENWOOD ELECTRONICS, S.A.

- CHAUSSEE DE HAREN, 484. 1800 VILVOORDE BELGIUM.
- 6056 HEUSENSTAMM, AM GOLDBERG 5, WEST-GERMANY.

TRIO ELECTRONICS, INC.

- 3-6-17 AOBADAI, MEGURO-KU, TOKYO, JAPAN.

© 1973-4 PRINTED IN JAPAN B51-0014-00 (T)

www.hifiengine.com