KENWOOD

HI/FI STEREO COMPONENTS

SERVICE MANUAL

KR-2600

AM FM STEREO RECEIVER

www.hifiengine.com

CONTENTS

EXTERNAL & TOP VIEW 3
DISASSEMBLY 4
PACKING 4
DIAL CORD STRINGING 5
BLOCK DIAGRAM 5
CIRCUIT DESCRIPTIONS 6
ADJUSTMENTS 7
TROUBLESHOOTING 8
PARTS LIST
- TOTAL 9
- TUNER (X05-1300-10, -41, -61) 9
- AUDIO (X09-1150-10) 10

DESTINATIONS' PARTS LIST 12
PC BOARD
- TUNER 13
- AUDIO 13

SCHEMATIC DIAGRAM 14
SPECIFICATIONS 15

Note 1 :
The products are subject to modification in components and circuits in different countries and regions. This is because each products must be used under the best condition.
This manual provides information of modification based on the standard in the U.S., for the convenience of ordering associated components and parts.

U.S.A.	K
Canada	P
PX	U
Australia	X
Europe	W
England	T
Scandinavia	L
South Africa	S
Other area	M

Note 2 :
Symbol ☆ and symbol ● in parts list mean the new parts and the parts not being kept in stock, respectively.

www.hifiengine.com

EXTERNAL & TOP VIEW

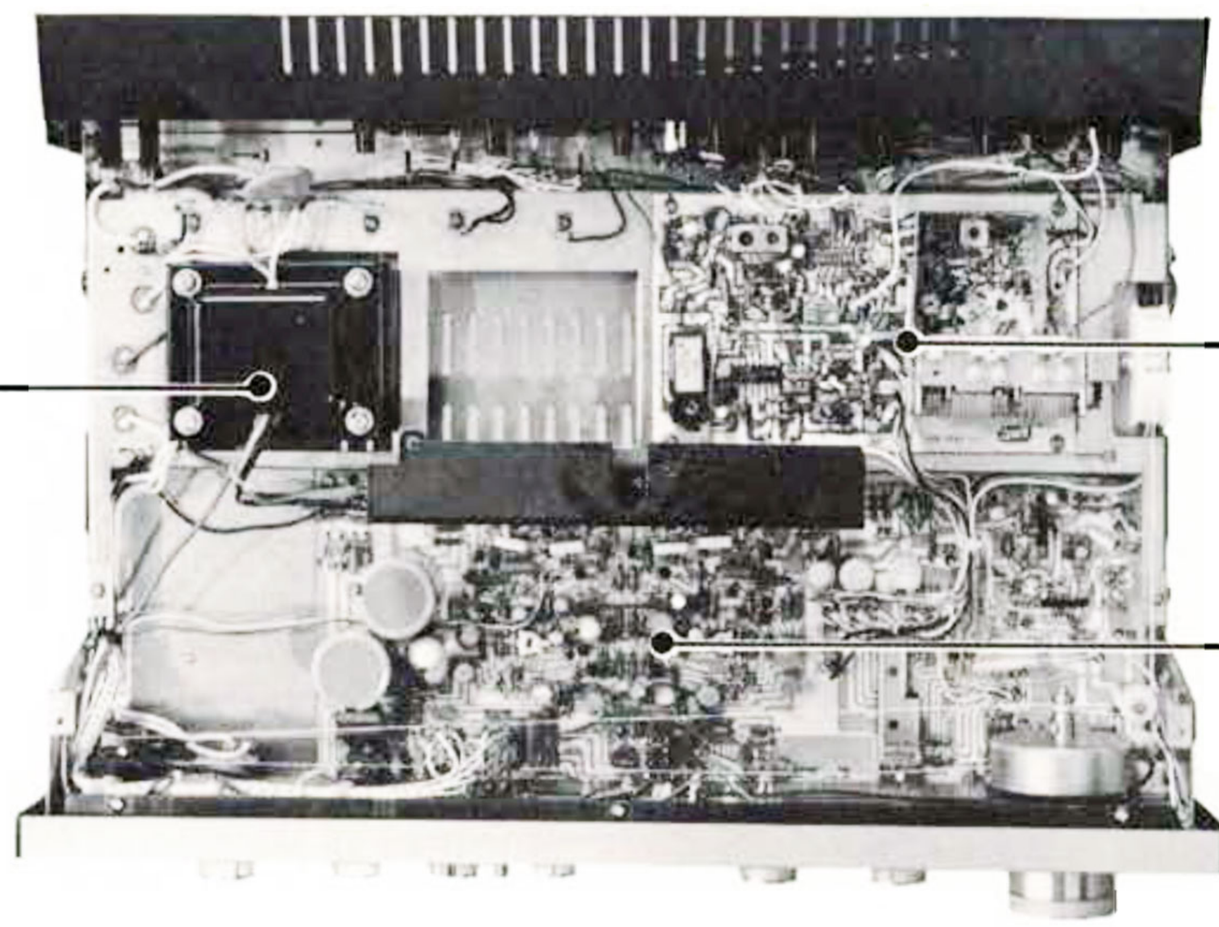

Refer to
DESTINATIONS'
PARTS LIST

DISASSEMBLY/PACKING

DISASSEMBLY 1

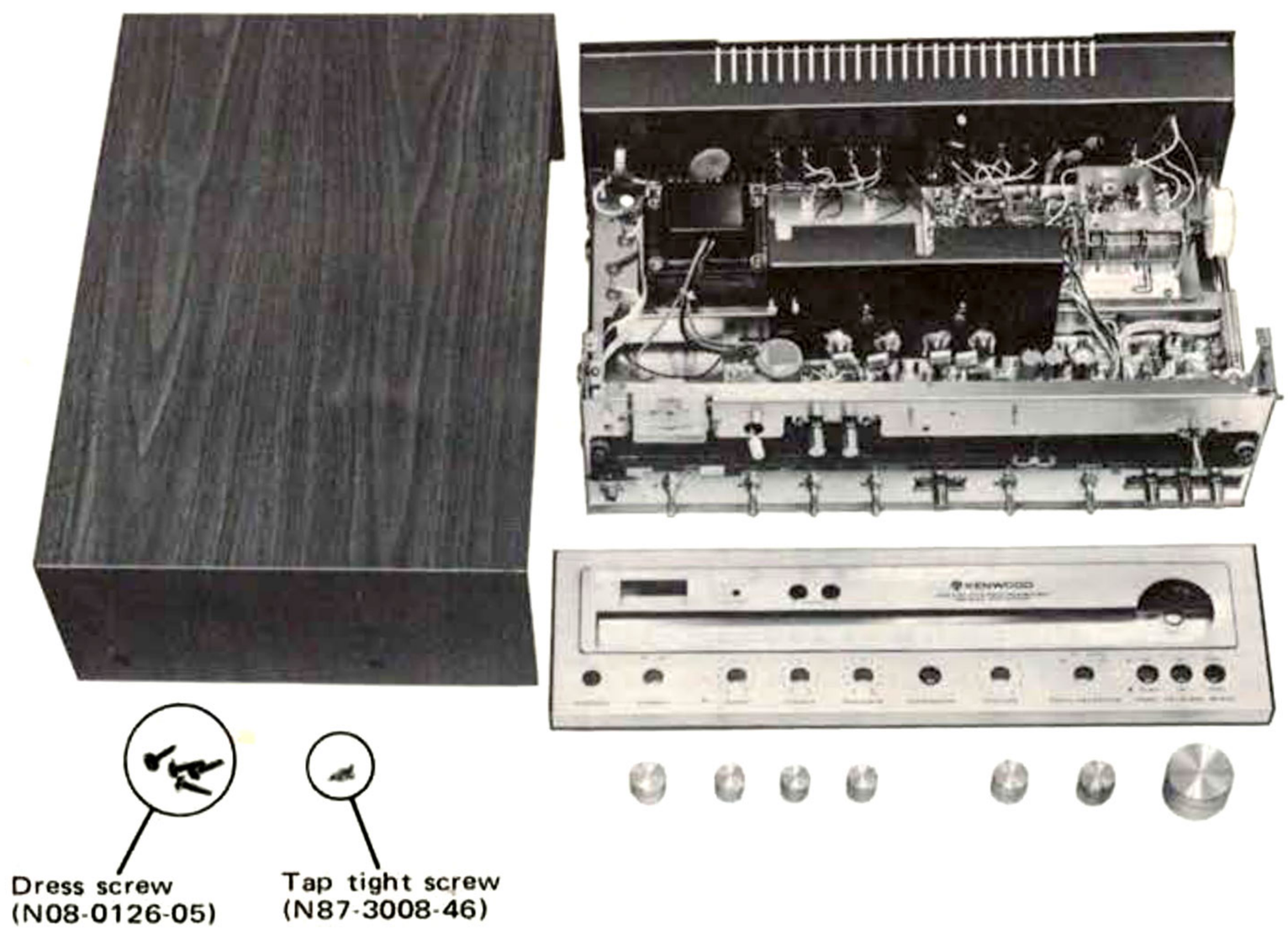

DISASSEMBLY 2

1. Remove the screws (indicated by arrow).
2. Lift the panel as shown in the photograph.

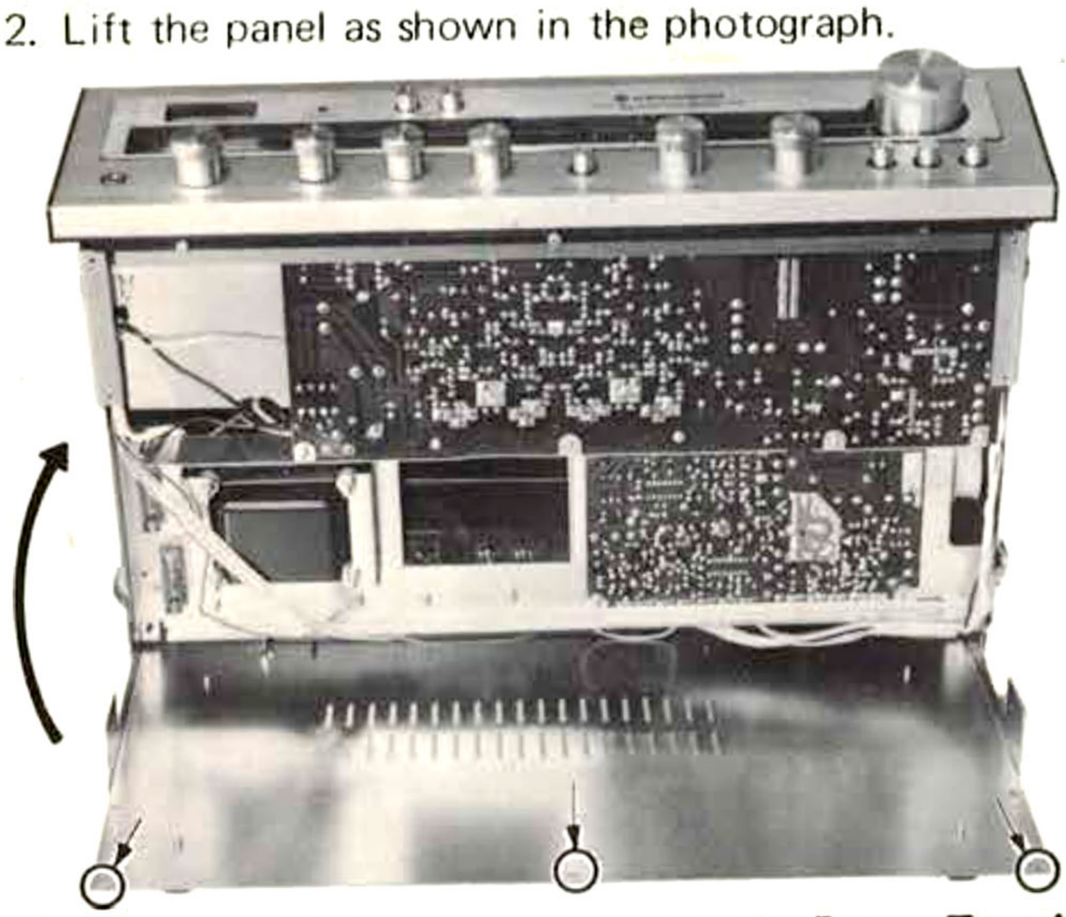

DISASSEMBLY 3 : How to Replace the Power Transistors.

1. Remove the screws fixing the metal plate.

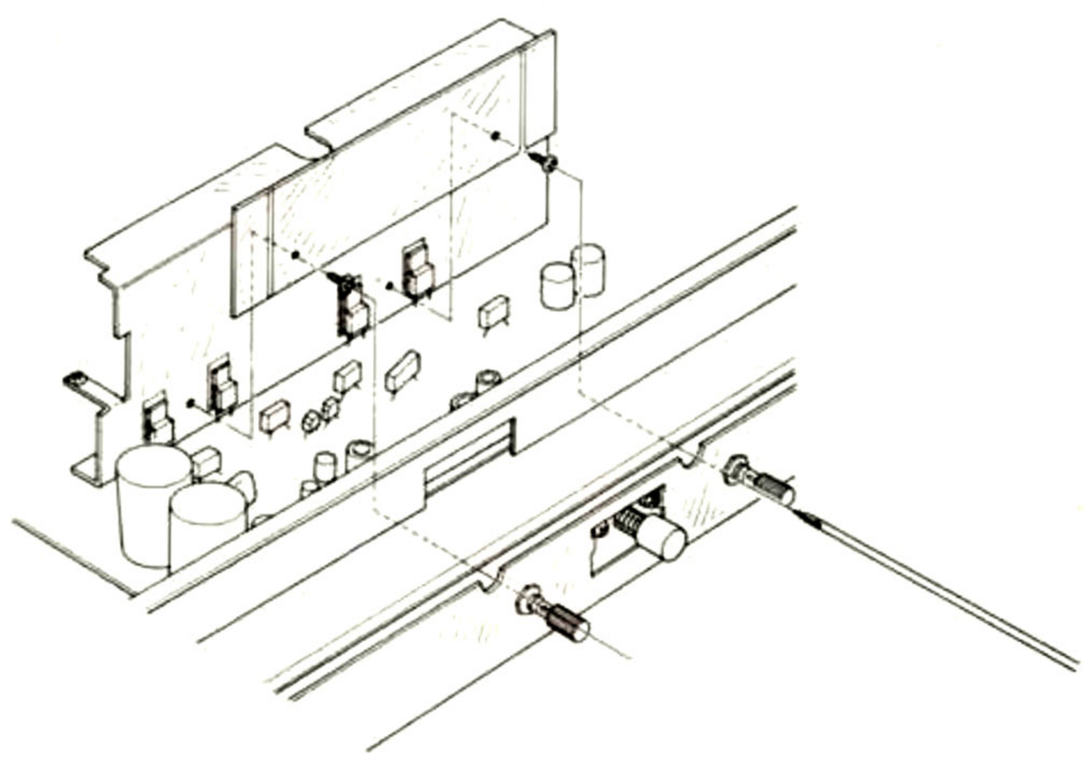

PACKING

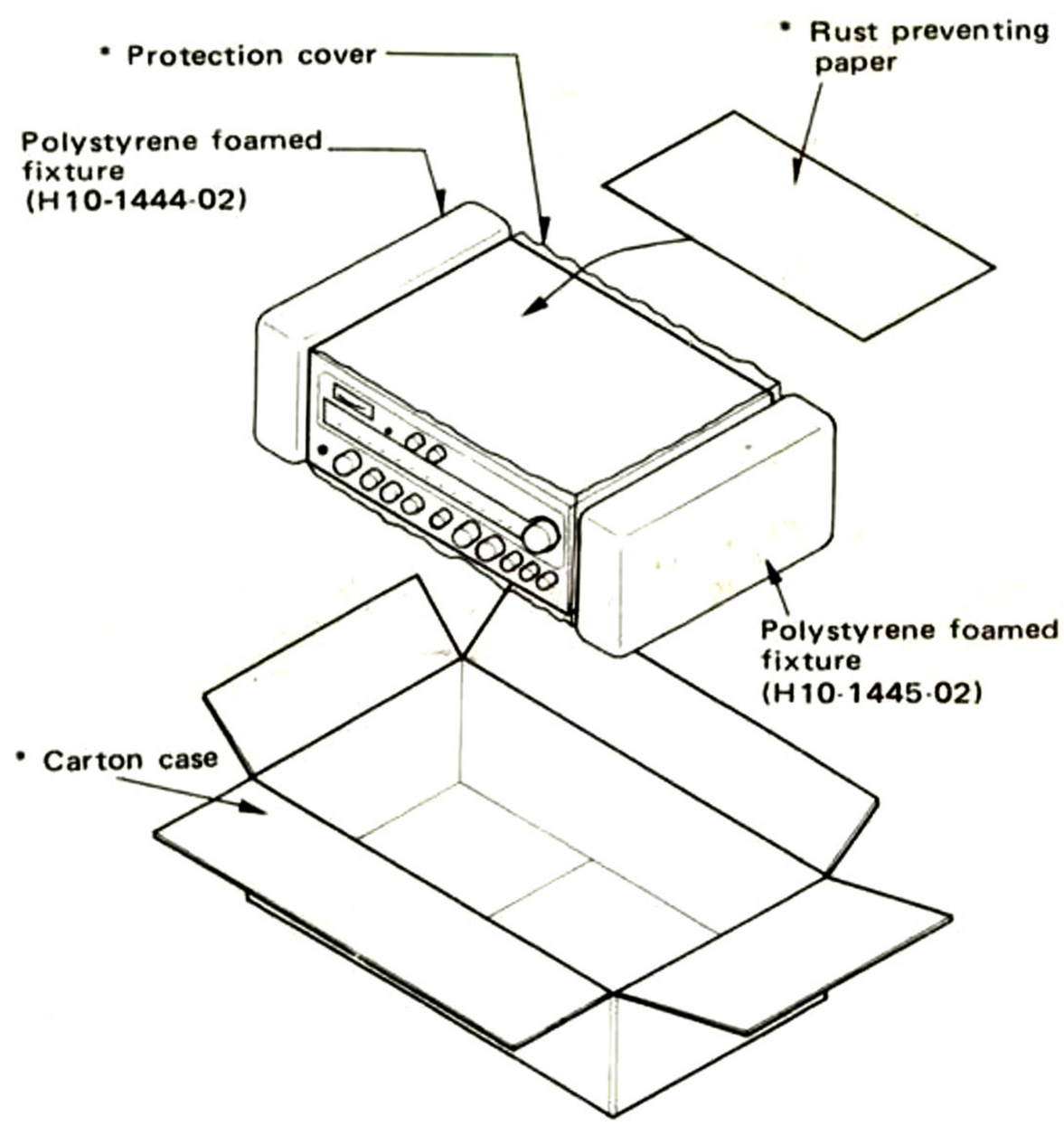

• Refer to DESTINATIONS' PARTS LIST.

DIAL CORD STRINGING/BLOCK DIAGRAM

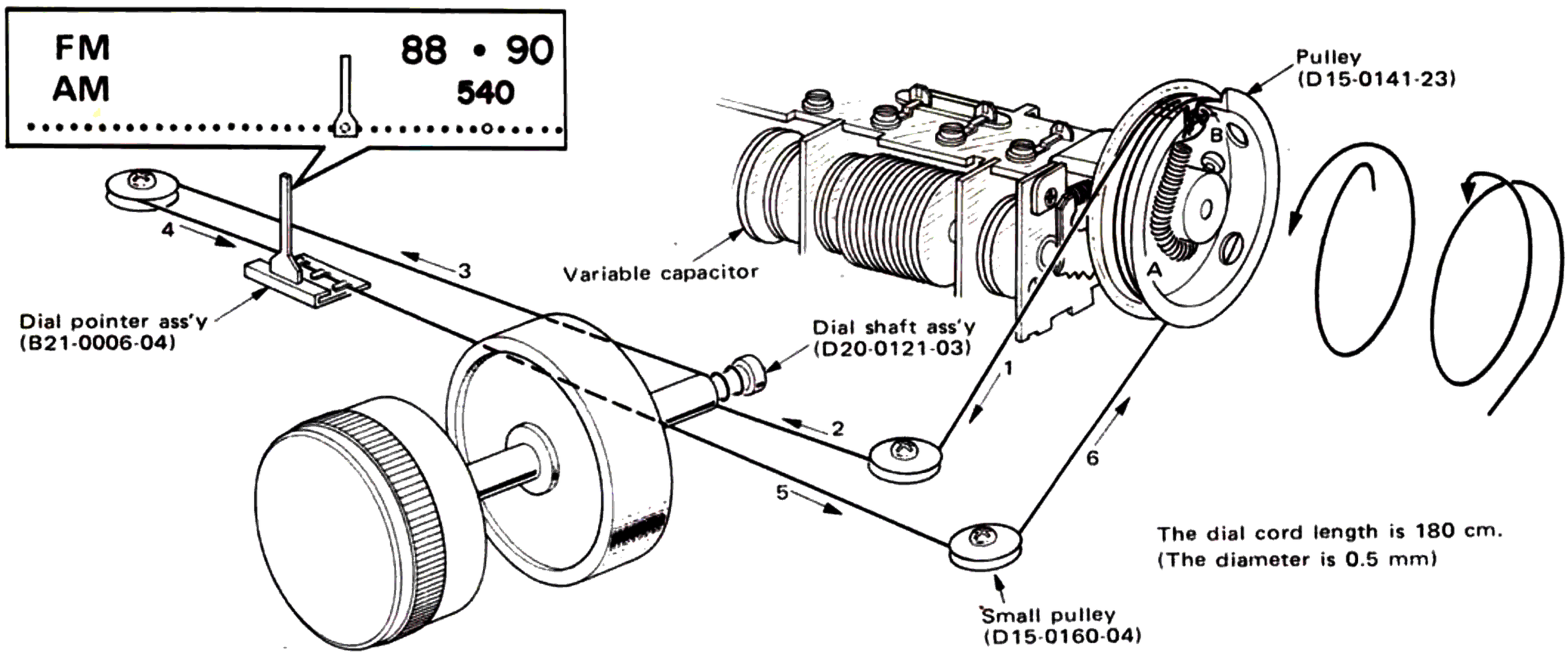

DIAL CORD STRINGING

1. Fully open the variable capacitor.
2. Fix the dial pulley to the shaft of the variable capacitor using 2 screws as shown.
3. Tie the dial cord to the dial spring A leaving a 10 cm length part of it.
4. Fook the dial spring A on the boss B and wind it one turn counterclockwise around the dial pulley.
5. Dress the dial cord in the direction of "1" to "2".
6. Wind the dial cord 2 turns around the dial shaft starting from its lower side, then dress it in the direction of "3" to "6".
7. Wind the dial cord one and a half turns around the dial pulley starting from its lower side and tie the end of it tightly with remaining a 10 cm dial cord.
8. Remove the dial spring A from the boss B.
9. Fully close the variable capacitor.
10. Mount the dial pointer as shown in the illustration.

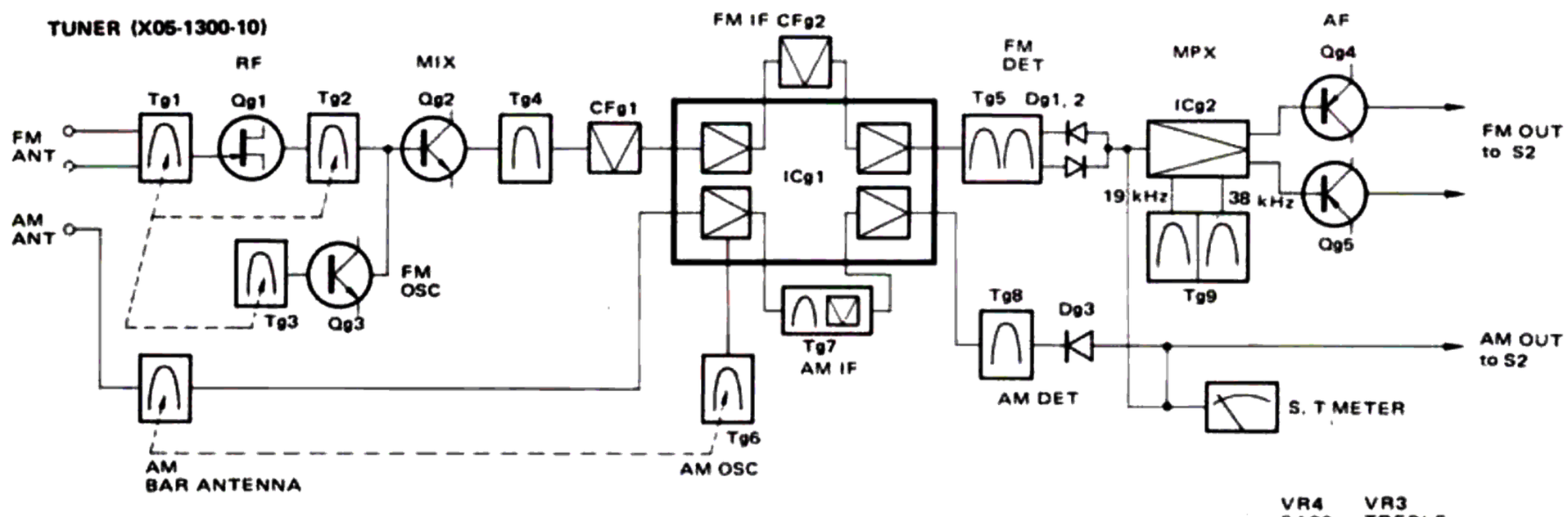

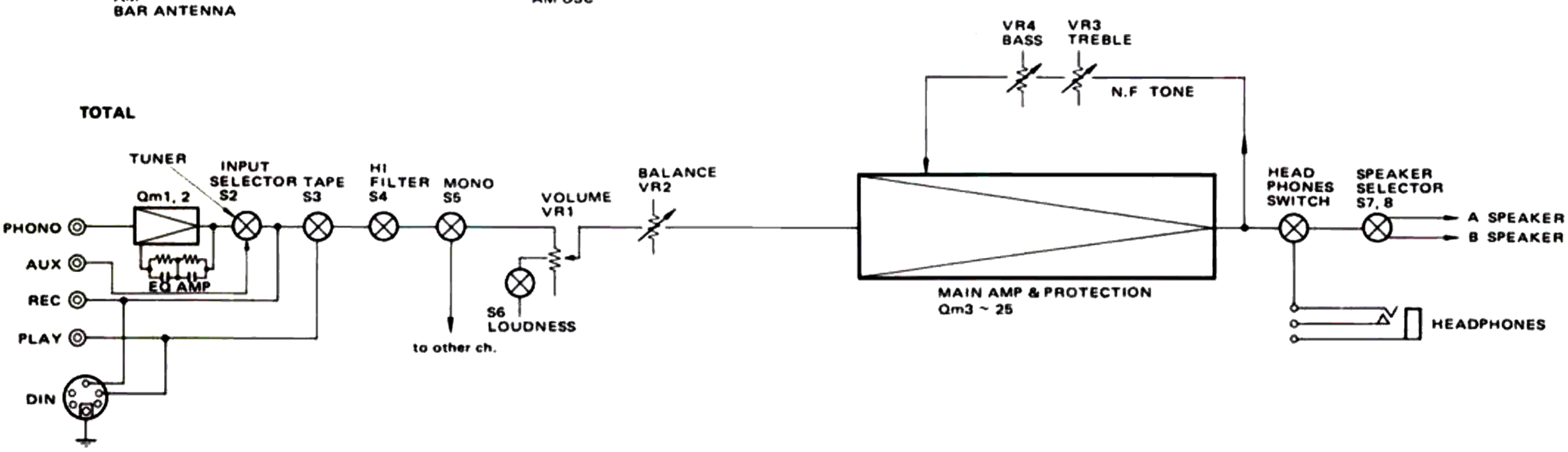

www.hifiengine.com

CIRCUIT DESCRIPTIONS

TUNER (X05-1300-10)

In this section, two ICs are employed. The one acts for FM-IF, AM-OSC, AM-MIX, and AM-IF stage, the other for FM-MPX stage. Consequently, only the LC resonance circuit for OSC, MIX, IF and the ceramic filter are added as external parts on AM circuitry.
MPX IC consists of composite signal amplifier, muting amplifier, MPX detection, 38 kHz amplifier, STEREO lamp amplifier and 19 kHz amplifier, which established stable separation characteristics.

AN217

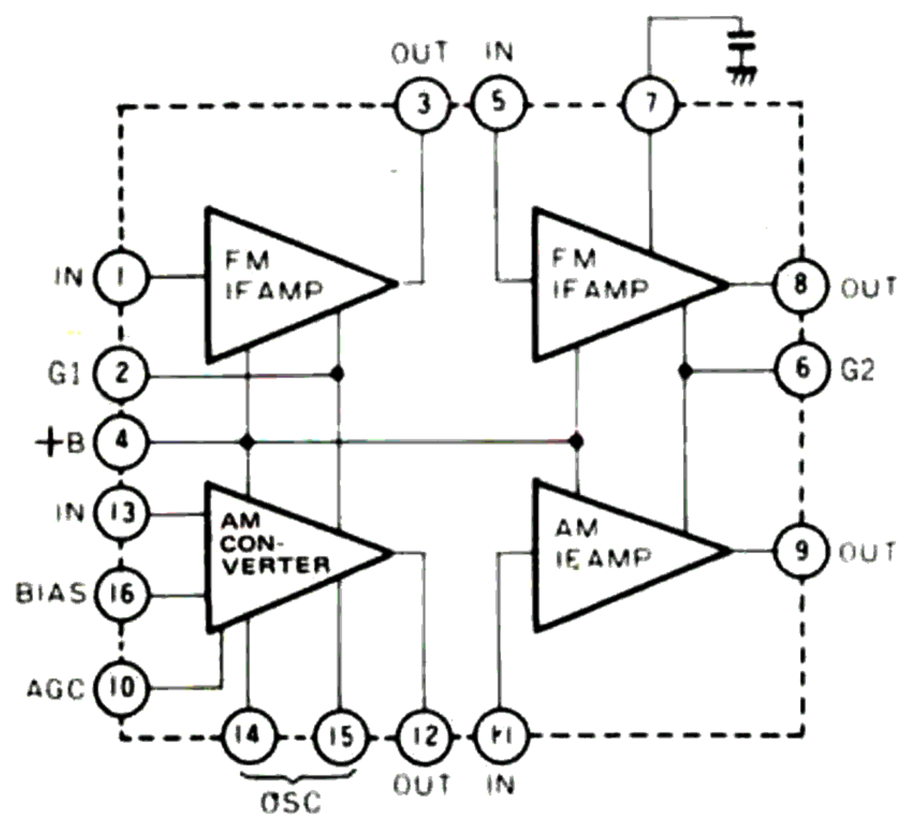

μPC554C

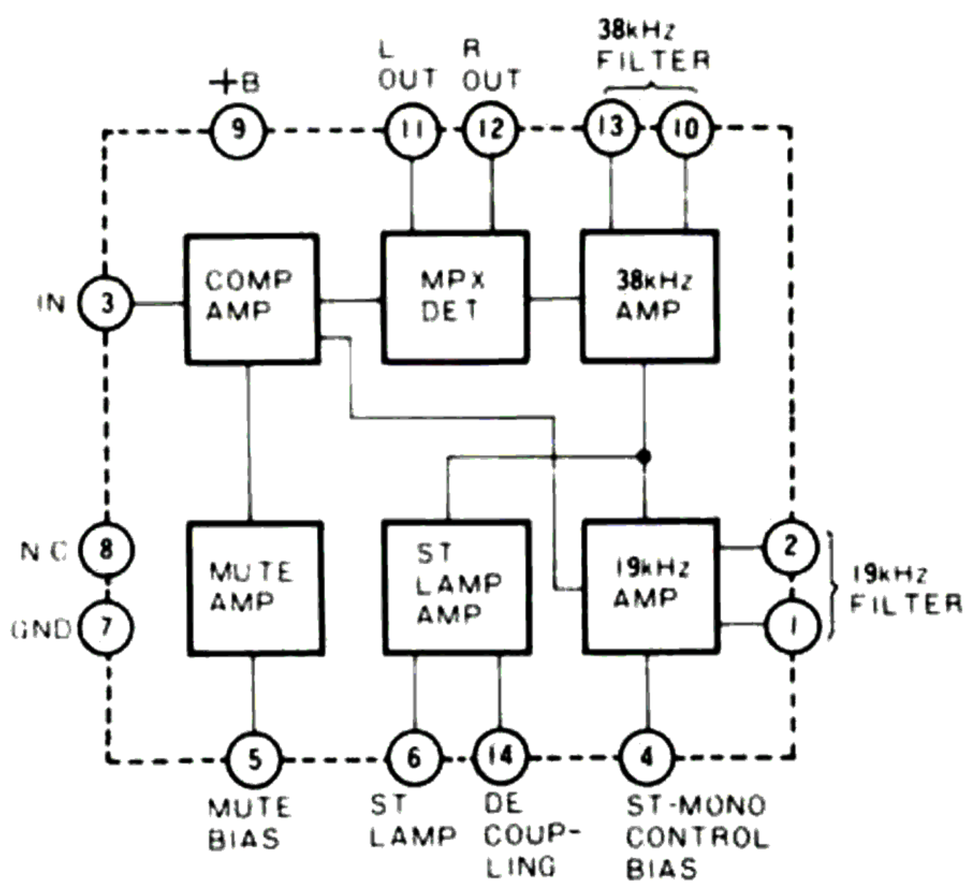

AUDIO (X09-1150-10)

Power supply, Power amp, Tone control and Preamp are involved in this unit. IC TA7136P (Qm1, Qm2) is used in Preamp. Pure complementary OCL circuit with ASO current limiter protection is employed in Power amp.
Tone control operation is effected by changing NF amount of Power amp.

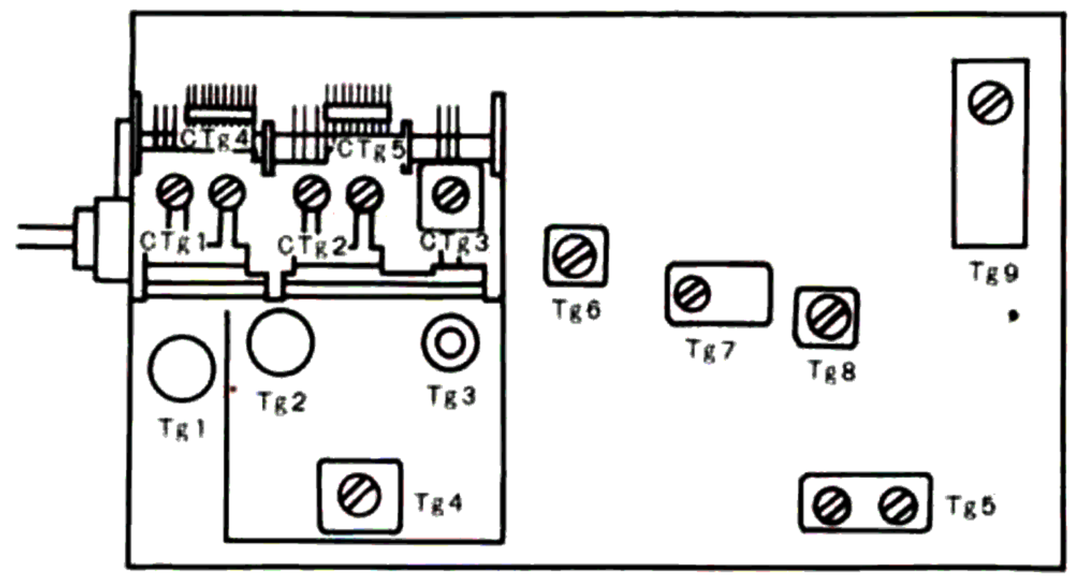

Fig. 1 TUNER Unit

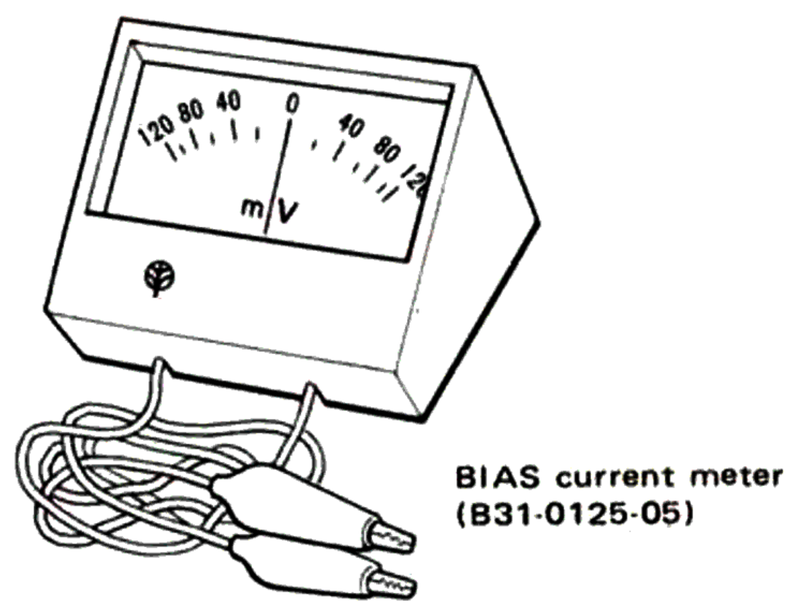

Fig. 2 BIAS CURRENT METER (B31-0125-05)

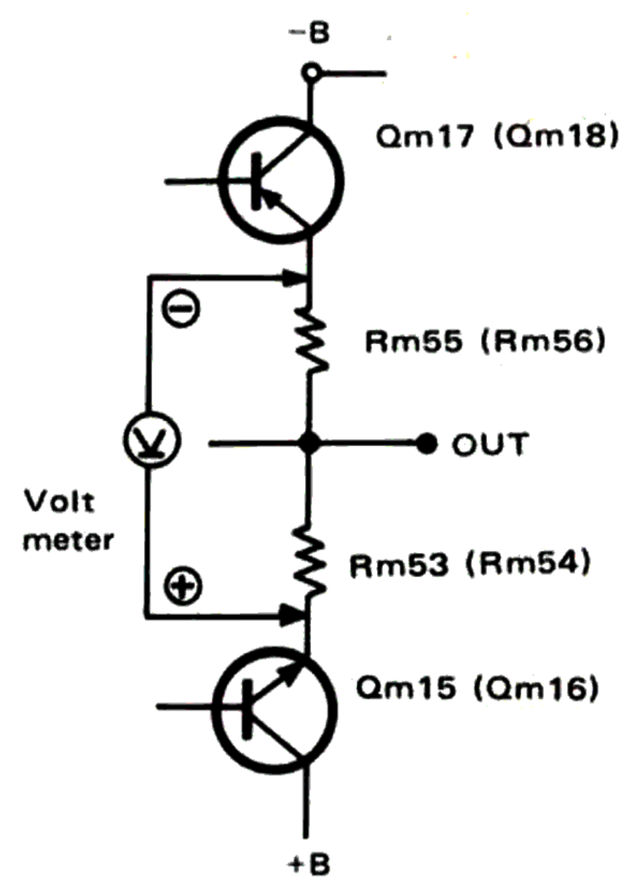

Fig. 3 BIAS Adjustment

www.hifiengine.com

ADJUSTMENTS

TEST EQUIPMENTS

RF signal generator . . . . . RF-SG
Oscilloscope . . . . . scope
Solid state volt meter . . . . . SSVM
FM stereo generator . . . . . MPX-SG
Frequency counter

NOTE

* Tuning dial is set to the proper point corresponding to no radio stations.
* RF-SG is set to the lowest response possible on oscilloscope.
* The output level of RF-SG is made a 6 dB drop by the dummy ant.
* The input level 60 dB means 66 dB read on RF-SG.
* Repeat TRACKING adjustment several times and confirm the reception of broadcasting.
* Test point is shown in the schematic diagram.

No.	ALIGN	TEST EQUIPMENTS		RECEIVER SETTING	OUTPUT INDICATOR	ADJUSTMENT POINTS	REMARKS
		CONNECTION	SETTING				
FM SECTION							
1	IF	RF-SG to ANT terminal via dummy ant.	98 MHz 60 dB 400 Hz (Mod) 75 kHz (Dev)	98 MHz	SSVM & scope to output jack (L)	Tg4	Maximum deflection
2	IF	–	–	–	T.S meter	Tg5 (bottom)	Make the pointer position in the center of the meter
3	IF	RF-SG to ANT terminal via dummy ant.	98 MHz (60 dB) 400 Hz (Mod) 75 kHz (Dev)	98 MHz	SSVM & scope to output jack (L)	Tg5 (top)	Maximum deflection & minimum distortion
4	TRACKING	Same	90 MHz 400 Hz (Mod) 75 kHz (Dev)	90 MHz	Same	Tg1 ~ 3	Maximum deflection
5	TRACKING	Same	108 MHz 400 Hz (Mod) 75 kHz (Dev)	108 MHz	Same	CTg1 ~ 3	Maximum deflection
6	OUTPUT	Same	98 MHz 400 Hz (Mod) 75 kHz (Dev) 60 dB (Input)	98 MHz	Same	–	Confirm output voltage is 500 mV.
7	SEPARATION	MPX-SG to RF-SG ext. jack	98 MHz 400 Hz (Mod) 67.5 kHz (Dev) L or R (Select) 60 dB (Input)	98 MHz	SSVM & scope to REC jack	Tg9 (19 kHz / 38 kHz)	Minimum cross-talk (Maximum separation)
8	38 kHz (This coil sealed usually should not be touched at random if not necessary.)	MPX-SG to RF-SG ext. jack	98 MHz 400 Hz (Mod) 67.5 kHz (Dev) Phase→Reverse 60 dB (Input)	Same	SSVM & scope to TP1	Tg9 (19 kHz / 38 kHz)	Maximum deflection (Adjust separation in the same manner as No. 7)
9	BEACON	Same	98 MHz 400 Hz (Mod) 40 kHz (Dev) 30 dB (Input)	98 MHz	–	–	Confirm STEREO indicator lights
AM SECTION							
1	IF	RF-SG to ANT terminal via dummy ant.	1000 kHz 400 Hz, 30% (Mod) 100 dB	1000 kHz	SSVM & scope to output jack (L)	Tg7, 8	Maximum deflection
2	TRACKING	Same	600 kHz 400 Hz, 30% (Mod) 100 dB	600 kHz	Same	Tg6 Bar antenna	Same
3	TRACKING	Same	1400 kHz 400 Hz, 30% (Mod) 100 dB	1400 kHz	Same	CTg4, 5	Same
4	S METER	Same	1000 kHz 400 Hz, 30% (Mod) 100 dB	1000 kHz	T. S meter	VRg2	More than 90 percent deflection
AUDIO SECTION							
1	BIAS	–	–	VOLUME is its min.	Volt meter or B31-0125-05	VR5, 6	Meter indicates 25 mV. (Fig. 2, 3)

www.hifiengine.com

TROUBLESHOOTING

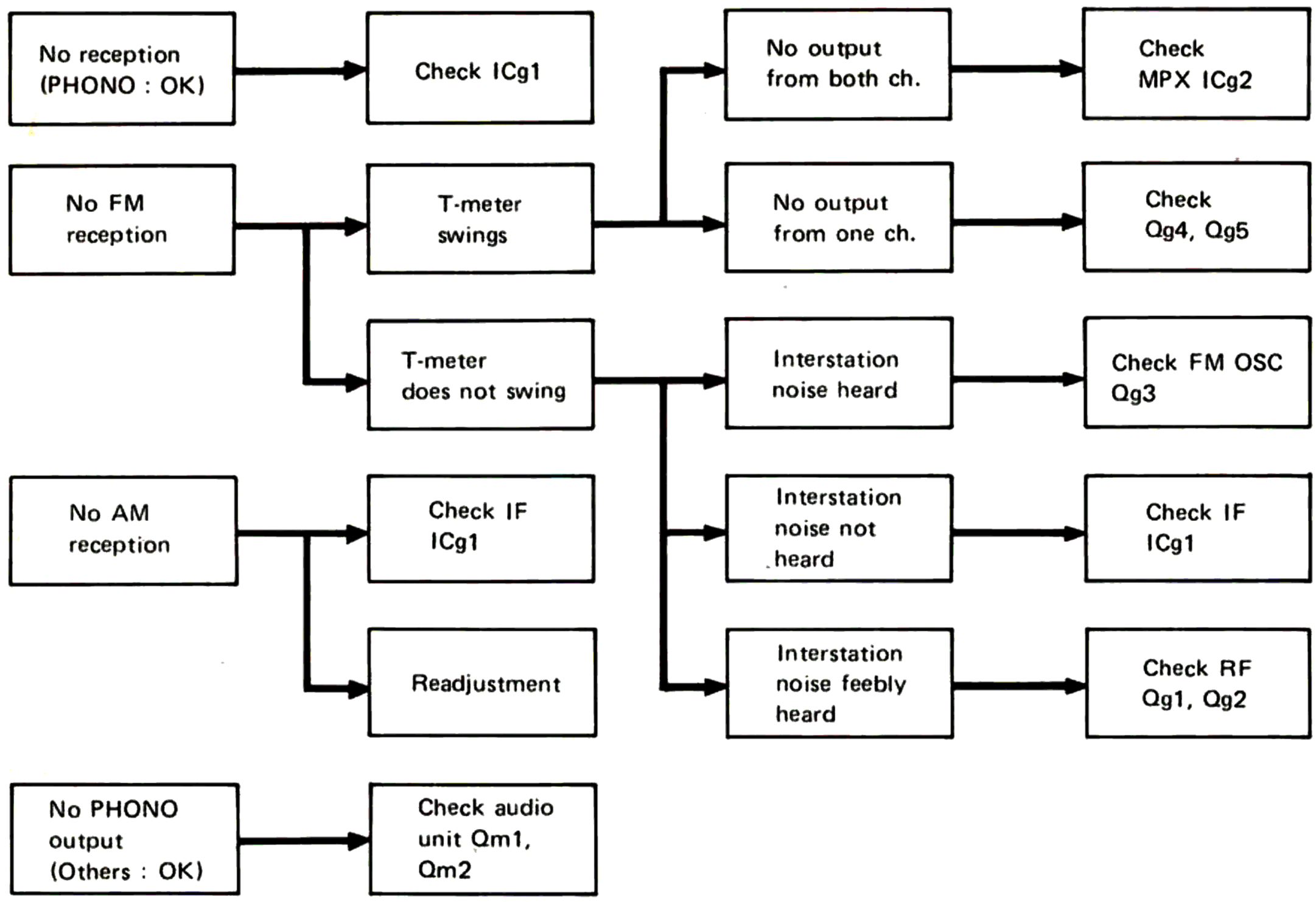

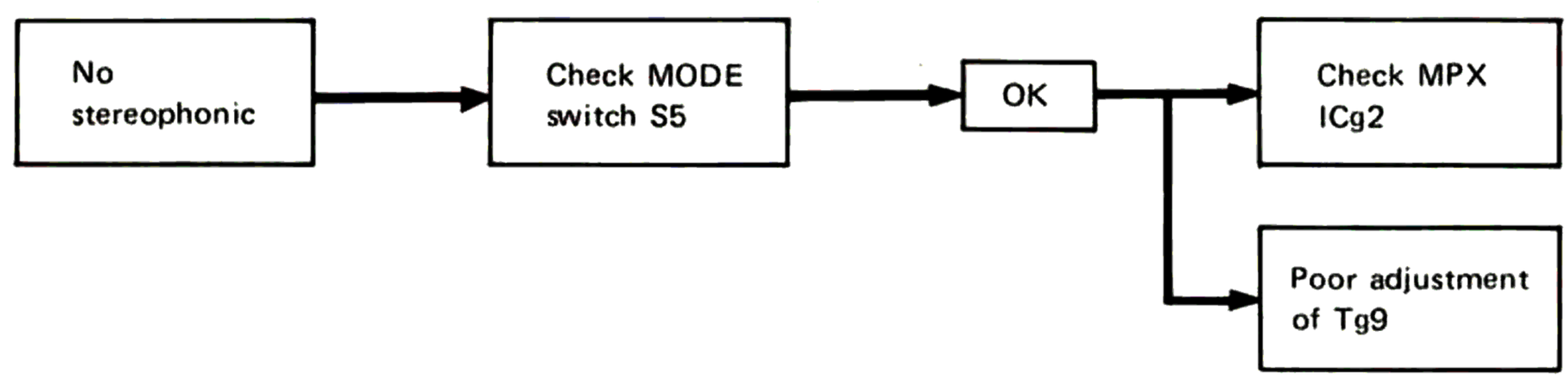

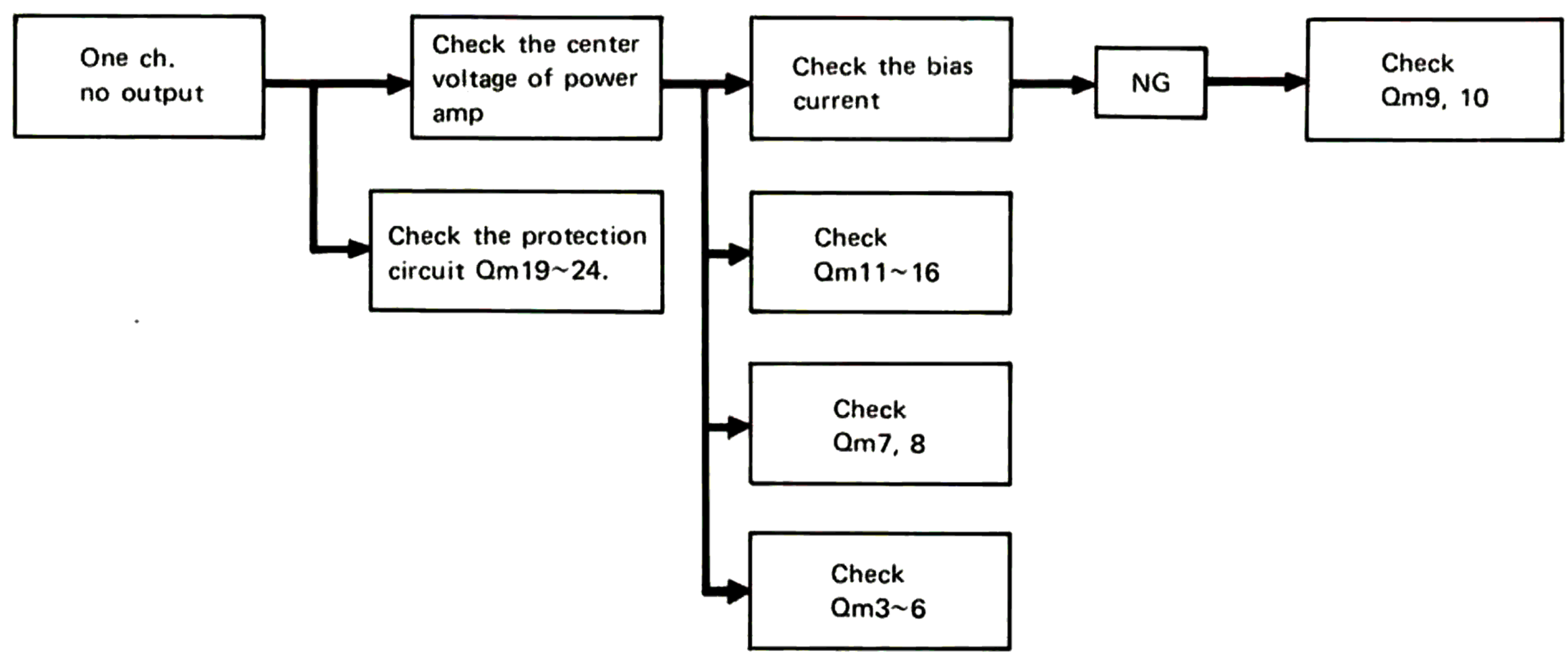

www.hifiengine.com

PARTS LIST

TOTAL

☆ : New parts, ● : The parts not being kept in stock.

Ref. No.	Parts No.	Description	Re-marks
		CAPACITOR	
C1, 2	C90-0245-05	Ceramic 0.01μF ±20%	
		RESISTOR	
R2, 3	RC05GF2H221K	Carbon 220Ω ±10% 1/2W	
R4, 5	PD14BY2E104J	Carbon 100kΩ ±5% 1/4W	
R6, 7	PD14BY2E394J	Carbon 390kΩ ±5% 1/4W	
		SEMICONDUCTOR	
–	V11-0392-05	LED GD4-203CD	
		MISCELLANEOUS	
–	A03-0204-03	Cabinet	☆
–	A10-0487-02	Chassis	● ☆
–	A21-0242-02	Dress panel	☆
–	B21-0006-04	Dial pointer ass'y	☆
–	B42-0009-04	Passed sticker	
–	B42-0473-14	Serial number seal	
–	E06-0501-05	DIN connector	
–	E13-0415-05	Pin jack x 2	☆
–	E20-0434-05	Speaker terminal x 2	☆
–	E20-0435-05	Antenna terminal	☆
–	F15-0204-04	Douser rubber x 2	● ☆
–	F15-0206-04	Douser felt	●
–	H10-1444-02	Polystyrene foamed fixture	
–	H10-1445-02	Polystyrene foamed fixture	
–	H25-0078-00	Instruction bag	
–	J21-0806-24	Bar antenna mounting hardware	
–	K21-0311-04	Knob (Power, volume, selector) x 3	☆
–	K21-0312-03	Knob (Tuning)	☆
–	K21-0313-04	Knob (Bass, treble, balance) x 3	☆
–	K27-0036-04	Knob (Pushbutton) x 6	☆
–	N08-0126-05	Dress screw (4 x 20, black) x 4	
–	N08-0127-05	Dress screw (4 x 30, bar antenna)	
–	N08-0128-15	GND terminal	
–	T90-0002-05	FM indoor antenna	
–	T90-0031-05	Bar antenna	

TUNER ASSEMBLY

Ref. No.	Parts No.	Description	Re-marks
		MISCELLANEOUS	
–	A11-0070-02	Sub chassis	● ☆
–	A22-0194-01	Sub panel	● ☆
–	A30-0105-02	Dial back board	● ☆
–	B30-0115-05	Pilot lamp (8V 300mA) x 2	☆
–	B31-0238-05	T.S meter	☆
–	D15-0141-23	Pulley	
–	D15-0160-04	Small pulley x 3	
–	D20-0121-03	Dial shaft ass'y	
–	E11-0044-15	Phone jack with switch	
–	E31-0034-05	Connector socket with lead wire (LED)	☆
–	G01-0045-24	Dial spring	
–	N09-0100-14	Screw for the small pulley x 3	
S7, 8	S42-2007-05	Pushbutton switch	
–	X09-1150-10	Audio unit	
–	351-0003-14	Dial cord 0.5φ 180cm	

TUNER (X05-1300-10, -41, -61)

Ref. No.	Parts No.	Description	Re-marks
		CAPACITOR	
Cg1	CC45SL1H120K	Ceramic 12pF ±10%	
Cg2	CK45F1H103Z	Ceramic 0.01μF +80%,–20%	
Cg3	CC45SL1H120K	Ceramic 12pF ±10%	
Cg4	CC45SL1H030C	Ceramic 3pF ±0.25pF	
Cg5	CC45TH1H020C	Ceramic 2pF ±0.25pF	
Cg7	CC45SL1H221K	Ceramic 220pF ±10%	
Cg8	CK45F1H223Z	Ceramic 0.022μF +80%,–20%	
Cg9	CC45PG1H150K	Ceramic 15pF ±10%	-10,-61
	CC45UG1H080K	Ceramic 8pF ±10%	-41
Cg10	CC45SG1H150K	Ceramic 15pF ±10%	-10,-61
	CC45TH1H150K	Ceramic 15pF ±10%	-41
Cg11	CC45SG1H470K	Ceramic 47pF ±10%	
Cg12	CC45SG1H220K	Ceramic 22pF ±10%	-10,-61
	CC45TH1H220K	Ceramic 22pF ±10%	-41
Cg13	CK45F1H103Z	Ceramic 0.01μF +80%,–20%	
Cg14~16	CK45F1H223Z	Ceramic 0.022μF +80%,–20%	
Cg17	CE04W1E100	Electrolytic 10μF 25WV	
Cg18	CC45SL1H221K	Ceramic 220pF ±10%	
Cg21	CK45F1H223Z	Ceramic 0.022μF +80%,–20%	
Cg22	CC45SL1H180K	Ceramic 18pF ±10%	
Cg23	CQ09S1H361J	Polystyrene 360pF ±5%	
Cg24	CK45F1H103Z	Ceramic 0.01μF +80%,–20%	
Cg25,26	CK45F1H223Z	Ceramic 0.022μF +80%,–20%	
Cg27,28	CE04W1H010	Electrolytic 1μF 50WV	
Cg29	CK45F1H223Z	Ceramic 0.022μF +80,–20%	
Cg30	C90-0269-05	Ceramic 1μF ±20%	
Cg31	CE04W1E4R7	Electrolytic 4.7μF 25WV	
Cg32	CQ93M1H102K	Mylar 0.001μF ±10%	
Cg33	CE04W1H010	Electrolytic 1μF 50WV	
Cg34,35	CQ93M1H273J	Mylar 0.027μF ±5%	-10,-41
	CQ93M1H183J	Mylar 0.018μF ±5%	-61
Cg36	CK45F1H103Z	Ceramic 0.01μF +80%,–20%	
Cg37,38	CQ93M1H392K	Mylar 0.0039μF ±10%	
Cg39,40	CQ93M1H102K	Mylar 0.001μF ±10%	
Cg41,42	CE04W1H010	Electrolytic 1μF 50WV	
Cg45	CC45SL1H180K	Ceramic 18pF ±10%	
Cg46	CK45F1H223Z	Ceramic 0.022μF +80%,–20%	
Cg47,48	CQ93M1H222K	Mylar 0.0022μF ±10%	
		RESISTOR	
Rg1	PD14BY2E680J	Carbon 68Ω ±5% 1/4W	
Rg2	PD14CY2E223J	Carbon 22kΩ ±5% 1/4W	
Rg3	PD14CY2E472J	Carbon 4.7kΩ ±5% 1/4W	
Rg4	PD14CY2E102J	Carbon 1kΩ ±5% 1/4W	
Rg5	PD14CY2E103J	Carbon 10kΩ ±5% 1/4W	
Rg6	PD14CY2E153J	Carbon 15kΩ ±5% 1/4W	
Rg7	PD14CY2E102J	Carbon 1kΩ ±5% 1/4W	
Rg8	PD14CY2E101J	Carbon 100Ω ±5% 1/4W	
Rg9	PD14BY2E680J	Carbon 68Ω ±5% 1/4W	
Rg11	PD14CY2E680J	Carbon 68Ω ±5% 1/4W	
Rg12	PD14BY2E470J	Carbon 47Ω ±5% 1/4W	
Rg13	PD14BY2E153J	Carbon 15kΩ ±5% 1/4W	
Rg14	PD14BY2E101J	Carbon 100Ω ±5% 1/4W	
Rg15,16	PD14CY2E471J	Carbon 470Ω ±5% 1/4W	
Rg17,18	PD14BY2E101J	Carbon 100Ω ±5% 1/4W	

www.hifiengine.com

PARTS LIST

Ref. No.	Parts No.	Description	Re-marks
Rg19	PD14BY2E153J	Carbon 15kΩ ±5% 1/4W	
Rg21	PD14BY2E103J	Carbon 10kΩ ±5% 1/4W	
Rg22	PD14BY2E222J	Carbon 2.2kΩ ±5% 1/4W	
Rg23	PD14BY2E154J	Carbon 150kΩ ±5% 1/4W	
Rg24	PD14CY2E223J	Carbon 22kΩ ±5% 1/4W	
Rg25	PD14BY2E223J	Carbon 22kΩ ±5% 1/4W	
Rg26	PD14BY2E101J	Carbon 100Ω ±5% 1/4W	
Rg27	PD14BY2E103J	Carbon 10kΩ ±5% 1/4W	
Rg28	PD14CY2E104J	Carbon 100kΩ ±5% 1/4W	
Rg29	PD14BY2E472J	Carbon 4.7kΩ ±5% 1/4W	
Rg30,31	PD14CY2E272J	Carbon 2.7kΩ ±5% 1/4W	
Rg32,33	PD14BY2E333J	Carbon 33kΩ ±5% 1/4W	
Rg34	PD14BY2E682J	Carbon 6.8kΩ ±5% 1/4W	
Rg35	PD14CY2E682J	Carbon 6.8kΩ ±5% 1/4W	
Rg36	PD14BY2E682J	Carbon 6.8kΩ ±5% 1/4W	
Rg37	PD14CY2E682J	Carbon 6.8kΩ ±5% 1/4W	
Rg38,39	PD14BY2E681J	Carbon 680Ω ±5% 1/4W	
Rg40,41	PD14CY2E332J	Carbon 3.3kΩ ±5% 1/4W	
Rg42,43	PD14BY2E104J	Carbon 100kΩ ±5% 1/4W	
Rg44	PD14BY2E103J	Carbon 10kΩ ±5% 1/4W	
Rg45	PD14CY2E101J	Carbon 100Ω ±5% 1/4W	
Rg46	PD14BY2E680J	Carbon 68Ω ±5% 1/4W	
Rg48	PD14BY2E121J	Carbon 120Ω ±5% 1/4W	
Rg49	PD14CY2E682J	Carbon 6.8kΩ ±5% 1/4W	
		SEMICONDUCTOR	
Qg1	V09-0071-05	FET 2SK55 (D) or (E)	
Qg2	V03-0444-05	Transistor 2SC1674 (L) or (K)	
Qg3	V03-0357-05	Transistor 2SC1342 (A) or (B)	
Qg4,5	V01-0140-05	Transistor 2SA763WL5	
ICg1	V30-0093-05	IC AN217BB	
ICg2	V30-0092-05	IC μPC554C (1)	
Dg1,2	V11-0076-05	Diode 1S2076 or 1S1555	
Dg3	V11-0051-05	Diode 1N60	
		COIL/IFT/FILTER/TRIMMER CAPACITOR	
CTg1	C05-0055-05	Ceramic trimmer capacitor	
Tg1	L31-0361-05	FM ANT coil	
Tg2	L31-0362-05	FM RF coil	
Tg3	L32-0187-05	FM OSC coil	-10,-61
	L32-0204-05	FM OSC coil	-41
Tg4	L30-0282-05	FM IFT	
Tg5	L30-0260-15	FM discriminator coil	
Tg6	L32-0186-05	AM OSC coil	
Tg7	L72-0035-05	AM ceramic filter	
Tg8	L30-0283-05	AM detector coil	
Tg9	L35-0058-05	MPX coil	
Lg1	L40-1091-41	Choke coil	
CFg1,2	L72-0034-05	FM ceramic filter	
		MISCELLANEOUS	
CRg1	R90-0107-05	CR parts	
CRg2	R90-0104-05	CR parts	
–	C01-0185-05	Variable capacitor	
–	F10-0344-03	Shield plate	●

AUDIO (X09-1150-10)

Ref. No.	Parts No.	Description	Re-marks
		CAPACITOR	
Cm1,2	CE04W1H010	Electrolytic 1μF 50WV	
Cm3,4	CE04W1A470	Electrolytic 47μF 10WV	
Cm5,6	CQ93M1H472J	Mylar 0.0047μF ±5%	
Cm7,8	CQ93M1H153J	Mylar 0.015μF ± 5%	
Cm9,10	CC45SL1H470K	Ceramic 47pF ±10%	
Cm11,12	CC45SL1H100D	Ceramic 10pF ±0.5pF	
Cm13,14	CE04W1H010	Electrolytic 1μF 50WV	
Cm15,16	CQ93M1H562K	Mylar 0.0056μF ±10%	
Cm17,18	CK45B1H561K	Ceramic 560pF ±10%	
Cm19,20	CQ93M1H273K	Mylar 0.027μF ±10%	
Cm21,22	CC45SL1H101K	Ceramic 100pF ±10%	
Cm23,24	CE04W1H010	Electrolytic 1μF 50WV	
Cm25~28	CE04W1A101	Electrolytic 100μF 10WV	
Cm29,30	CC45SL1H100D	Ceramic 10pF ±0.5pF	
Cm31,32	CE04W1E470	Electrolytic 47μF 25WV	
Cm33,34	CC45SL1H101K	Ceramic 100pF ±10%	
Cm35~38	CE04W1A470	Electrolytic 47μF 10WV	
Cm39,40	CQ93M1H104K	Mylar 0.1μF ±10%	
Cm41~44	CE04W1C100NP	Non-pole electrolytic 10μF 16WV	
Cm45,46	CE04W1E100	Electrolytic 10μF 25WV	
Cm47~50	CE04W1E3R3MBR	Electrolytic 3.3μF 25WV	
Cm51,52	CQ93M1H224K	Mylar 0.22μF ±10%	
Cm53,54	CQ93M1H333K	Mylar 0.033μF ±10%	
Cm55,56	CQ93M1H224K	Mylar 0.22μF ±10%	
Cm57,58	C90-0299-05	Electrolytic 4700μF 40WV	
Cm59~61	CE04W1C471	Electrolytic 470μF 16WV	
Cm62,63	CK45E2H103P	Ceramic 0.01μF +100%,–0%	
Cm64	CE04W1V221	Electrolytic 220μF 35WV	
Cm65	CE04W1E3R3MBR	Electrolytic 3.3μF 25WV	
		RESISTOR	
Rm1,2	PD14BY2E222J	Carbon 2.2kΩ ±5% 1/4W	
Rm3~6	PD14BY2E104J	Carbon 100kΩ ±5% 1/4W	
Rm7,8	PD14BY2E331J	Carbon 330Ω ±5% 1/4W	
Rm9,10	PD14BY2E104J	Carbon 100kΩ ±5% 1/4W	
Rm13,14	PD14BY2E163J	Carbon 16kΩ ±5% 1/4W	
Rm15,16	PD14CY2E244J	Carbon 240kΩ ±5% 1/4W	
Rm17,18	PD14BY2E563J	Carbon 56kΩ ±5% 1/4W	
Rm19,20	PD14BY2E562J	Carbon 5.6kΩ ±5% 1/4W	
Rm21,22	PD14BY2E472J	Carbon 4.7kΩ ±5% 1/4W	
Rm23,24	PD14BY2E123J	Carbon 12kΩ ±5% 1/4W	
Rm25,26	PD14BY2E394J	Carbon 390kΩ ±5% 1/4W	
Rm27,28	PD14BY2E562J	Carbon 5.6kΩ ±5% 1/4W	
Rm29,30	PD14BY2E104J	Carbon 100kΩ ±5% 1/4W	
Rm31,32	PD14CY2E153J	Carbon 15kΩ ±5% 1/4W	
Rm33,34	PD14BY2E272J	Carbon 2.7kΩ ±5% 1/4W	
Rm35,36	PD14BY2E151J	Carbon 150Ω ±5% 1/4W	
Rm37,38	PD14BY2E124J	Carbon 120kΩ ±5% 1/4W	
Rm39,40	PD14BY2E222J	Carbon 2.2kΩ ±5% 1/4W	
Rm41,42	PD14BY2E472J	Carbon 4.7kΩ ±5% 1/4W	
Rm43,44	PD14BY2E392J	Carbon 3.9kΩ ±5% 1/4W	
Rm45~48	PD14BY2E182J	Carbon 1.8kΩ ±5% 1/4W	
Rm49~52	PD14BY2E331JB	Carbon 330Ω ±5% 1/4W	
Rm53~56	R92-0110-05	Cement 0.47Ω ±10% 1W	
Rm57,58	PD14BY2E153J	Carbon 15kΩ ±5% 1/4W	
Rm59~62	PD14BY2E182J	Carbon 1.8kΩ ±5% 1/4W	
Rm63,64	PD14CY2E102J	Carbon 1kΩ ±5% 1/4W	
Rm65,66	PD14BY2E102J	Carbon 1kΩ ±5% 1/4W	
Rm67,68	PD14BY2E153J	Carbon 15kΩ ±5% 1/4W	
Rm69,70	PD14BY2E101J	Carbon 100Ω ±5% 1/4W	
Rm71,72	PD14BY2E681J	Carbon 680Ω ±5% 1/4W	
Rm73,74	PD14CY2E153J	Carbon 15kΩ ±5% 1/4W	
Rm75,76	PD14BY2E181J	Carbon 180Ω ±5% 1/4W	
Rm77,78	PD14BY2E121J	Carbon 120Ω ±5% 1/4W	
Rm79,80	PD14BY2E102J	Carbon 1kΩ ±5% 1/4W	
Rm81,82	PD14BY2E331J	Carbon 330Ω ±5% 1/4W	
Rm83,84	PD14BY2E152J	Carbon 1.5kΩ ±5% 1/4W	
Rm85,86	RN14AB3A100JB	Metalfilm 10Ω ±5% 1W	
Rm87	PD14BY2E331JB	Carbon 330Ω ±5% 1/4W	
Rm88	PD14BY2E681JB	Carbon 680Ω ±5% 1/4W	
Rm89	RN14AB3A271JB	Metal film 270Ω ±5% 1W	
Rm90	PD14BY2E101JB	Carbon 100Ω ±5% 1/4W	
Rm91	PD14BY2E681JB	Carbon 680Ω ±5% 1/4W	
Rm92	PD14BY2E331JB	Carbon 330Ω ±5% 1/4W	

www.hifiengine.com

PARTS LIST

Ref. No.	Parts No.	Description	Re-marks
Rm93	PD14BY2E102JB	Carbon 1kΩ ±5% 1/4W	
Rm94	PD14BY2E104J	Carbon 100kΩ ±5% 1/4W	
SEMICONDUCTOR			
Qm1,2	V30-0122-05	IC TA7136P	
Qm3~6	V01-0140-05	Transistor 2SA763WL 4 or 5	
Qm7,8	V03-0215-05	Transistor 2SC1213A (B) or (C)	
Qm9,10	V03-0447-05	Transistor 2SC1681 (GR)or(BL)	
Qm11,12	V03-0215-05	Transistor 2SC1213A (B) or (C)	
Qm13,14	V01-0073-05	Transistor 2SA673A (B) or (C)	
Qm15,16	V03-0330-05	Transistor 2SC789	
Qm17,18	V01-0107-05	Transistor 2SA489	
Qm19,20	V03-0270-05	Transistor 2SC945 (Q) or (R)	
Qm21,22	V01-0084-05	Transistor 2SA733 (Q) or (R)	
Qm23,24	V03-0270-05	Transistor 2SC945 (Q) or (R)	
Qm25	V03-0408-05	Transistor 2SC1222 (U) or (E)	
Dm1~4	V11-0076-05	Diode 1S2076 or 1S1555	
Dm5~8	V11-0219-05	Diode V06B	
Dm9,10,14	V11-0076-05	Diode 1S2076 or 1S1555	
Dm11	V11-0263-05	Zener diode BZ-090	
Dm12,13	V11-0051-05	Diode 1N60	
THm1,2	V22-0027-05	Thermistor 5TP-41L	
POTENTIOMETER			
VR1	R06-5017-05	100kΩ (B) x 2 VOLUME	☆
VR2	R01-5014-05	200kΩ (W) BALANCE	☆
VR3,4	R06-2005-05	5kΩ (C) BASS, TREBLE	☆
VR5,6	R12-0047-05	PC trimmer 500Ω (B) BIAS	☆
SWITCH			
S2	S01-4023-05	Slide rotary INPUT SELECTOR	☆
S3~5	S42-3013-05	Pushbutton TAPE, HI, MODE	☆
S6	S40-2069-05	Pushbutton LOUDNESS	☆
MISCELLANEOUS			
–	F01-0238-13	Heat sink	
–	F20-0078-05	Mica insulating plate x 4	
–	J21-1569-04	Transistor mounting hardware	● ☆

www.hifiengine.com

DESTINATIONS' PARTS LIST

Ref. No.	U.S.A. (K)	Canada (P)	PX (U)	Australia (X)	Europe (W)	Scandinavia (L)	England (T)	South Africa (S)	Other Area (M)	Description
C3	C91-0001-05	C91-0001-05	–	CK45E3D103PMU	CK45E3D103PMU	CK45E3D103PMU	CK45E3D103PMU	CK45E3D103PMU	CK45E3D103PMU	Ceramic 0.01μF
R1	RC05GF2H225K	RC05GF2H225K	–	–	–	–	–	–	–	Carbon resistor 2.2MΩ ± 10% 1/2W
–	A20-1026-03	A20-1026-03	–	A20-1026-03	A20-1026-03	A20-1026-03	A20-1027-03	A20-1090-03	A20-1026-03	Panel assembly
–	A20-1028-01	A20-1028-01	–	A20-1028-01	A20-1028-01	A20-1028-01	A20-1091-01	A20-1028-01	A20-1028-01	Panel
–	A23-0643-02	A23-0643-02	–	A23-0644-02	A23-0647-02	A23-0648-02	A23-0646-02	A23-0644-02	A23-0644-02	Rear panel
–	B20-0370-04	B20-0370-04	–	B20-0370-04	B20-0370-04	B20-0370-04	B20-0370-04	B20-0371-04	B20-0370-04	Dial calibrations
–	B41-0220-04	B41-0220-04	–	–	–	–	–	–	–	UL caution sticker
–	–	–	–	–	B42-0024-04	–	–	–	–	SEV sticker x 2
–	B42-0359-04	B42-0359-04	–	–	–	–	–	–	–	Caution sticker
–	B42-0421-04	–	–	–	–	–	–	–	–	UL sticker
–	B42-0439-04	B42-0439-04	–	–	–	–	–	–	–	Fuse name plate
–	–	–	–	–	B42-0574-04	–	–	–	–	FTZ sticker
–	B42-0612-04	–	–	–	–	–	–	–	–	Vinyl chloride indicating sticker
–	B46-0056-00	B46-0055-00	–	–	–	–	–	–	–	Warranty card
–	B50-1472-00	B50-1472-00	–	B50-1472-00	B50-1472-00	B50-1472-00	B50-1473-00	B50-1472-00	B50-1472-00	Instruction manual
–	–	–	–	B58-0003-00	B58-0156-00	–	–	B58-0003-00	B58-0003-00	Power supply caution card
–	B58-0043-00	B58-0043-00	–	–	–	–	–	–	–	Carton case caution card
–	–	–	–	B58-0101-00	B58-0157-00	–	–	B58-0101-00	B58-0101-00	Power voltage selector caution card
–	–	–	–	B58-0108-00	B58-0108-00	–	–	B58-0108-00	B58-0108-00	Spare fuse caution card
–	–	–	–	–	–	–	B58-0214-04	–	–	Power cord caution card
–	–	–	–	D32-0075-04	D33-0075-04	–	–	D32-0075-04	D32-0075-04	Switch stopper
–	E08-0225-05	E08-0225-05	–	E08-0225-05	E08-0225-05	–	–	E08-0225-05	E08-0225-05	AC outlet
–	E30-0181-05	E30-0181-05	–	E30-0185-05	E30-0459-05	E30-0292-05	040-0304-05	040-0304-05	E30-0545-05	Power cord
–	–	–	–	F05-1023-05	F06-1021-05	–	–	F05-1023-05	F05-1023-05	Fuse 1A (Spare)
–	F05-1021-05x2	F05-1021-05x2	–	F05-1023-05	F06-1021-05	F06-1021-05	F05-1023-05	F05-1023-05	F05-1023-05	Fuse 1A (Spare)
–	–	–	–	F05-5013-05	F05-5015-05	F05-5015-05	F05-5013-05	F05-5013-05	F05-5013-05	Fuse 0.5A
–	–	–	–	–	F09-0044-05	F09-0044-05	–	–	–	Thermal protector
–	H01-1571-04	H01-1572-04	–	H01-1571-04	H01-1571-04	H01-1571-04	H01-1573-04	H01-1571-04	H01-1571-04	Carton case
–	H20-0341-14	H20-0417-04	–	H20-0417-04	H20-0417-04	H20-0417-04	H20-0417-04	H20-0417-04	H20-0417-04	Protection cover
–	–	–	–	H25-0029-04	H25-0029-04	–	–	H25-0029-04	H25-0029-04	Polyethylene bag
–	–	–	–	–	–	–	–	–	H40-0004-04	Rust preventing paper
–	J02-0073-05	J02-0049-14	–	J02-0049-14	J02-0049-14	J02-0049-14	J02-0049-14	J02-0049-14	J02-0049-14	Leg x 4
–	J13-0040-05	J13-0040-05	–	J13-0040-05	J13-0027-05	J13-0027-05	J13-0040-05	J13-0040-05	J13-0040-05	Fuse holder x 2
–	J41-0034-05x2	J41-0034-05x2	–	J41-0024-15	J41-0017-05	J41-0017-05	J41-0024-15	J41-0024-15	J41-0034-05	Power cord bushing
–	–	–	–	–	–	J61-0038-05	J61-0038-05	J61-0038-05	–	Cord band
–	L01-1041-05	L01-1048-05	–	L01-1045-05	L01-1046-05	L01-1042-05	L01-1047-05	L01-1045-05	L01-1045-05	Power transformer
S1	S40-2071-05	S40-2071-05	–	S40-2071-05	S40-1003-15	S40-1003-15	S40-1003-15	S40-2071-05	S40-2071-05	Power switch
–	–	–	–	S31-2001-05	S31-2001-05	–	–	S31-2001-05	S31-2001-05	Slide switch
–	X90-1220-10	X90-1220-10	–	X90-1220-71	X90-1220-61	X90-1220-71	X90-1220-51	X90-1220-41	X90-1220-41	Tuner assembly
–	X05-1300-10	X05-1300-10	–	X05-1300-61	X05-1300-61	X05-1300-61	X05-1300-61	X05-1300-41	X05-1300-10	Tuner unit

www.hifiengine.com

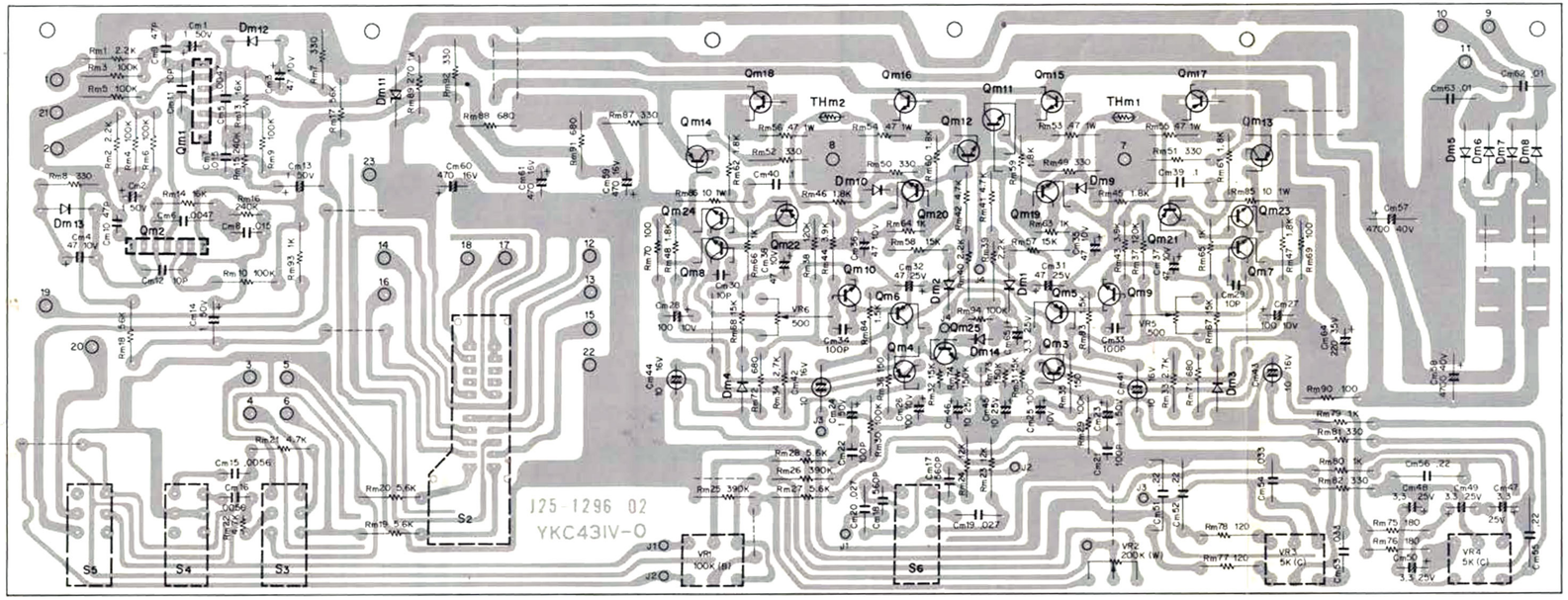

Qm1,2:TA7136P, Qm3~6:2SA763WL4 or 5, Qm7, 8, 11, 12:2SC1213A (B) or (C), Qm9, 10:2SC1681, (GR) or (BL), Qm13, 14:2SA673A (B) or (C), Qm15, 16:2SC789, Qm17, 18: 2SA489, Qm19, 20, 23, 24:2SC945 (Q) or (R), Qm21, 22:2SA733 (Q) or (R), Dm1~4, 9, 10, 14:1S2076 or 1S1555, Dm5~8:V06B, Dm11:BZ090, Dm12, 13:1N60, THm1, 2:5TP41L, Qm25:2SC1222 (U) or (E)

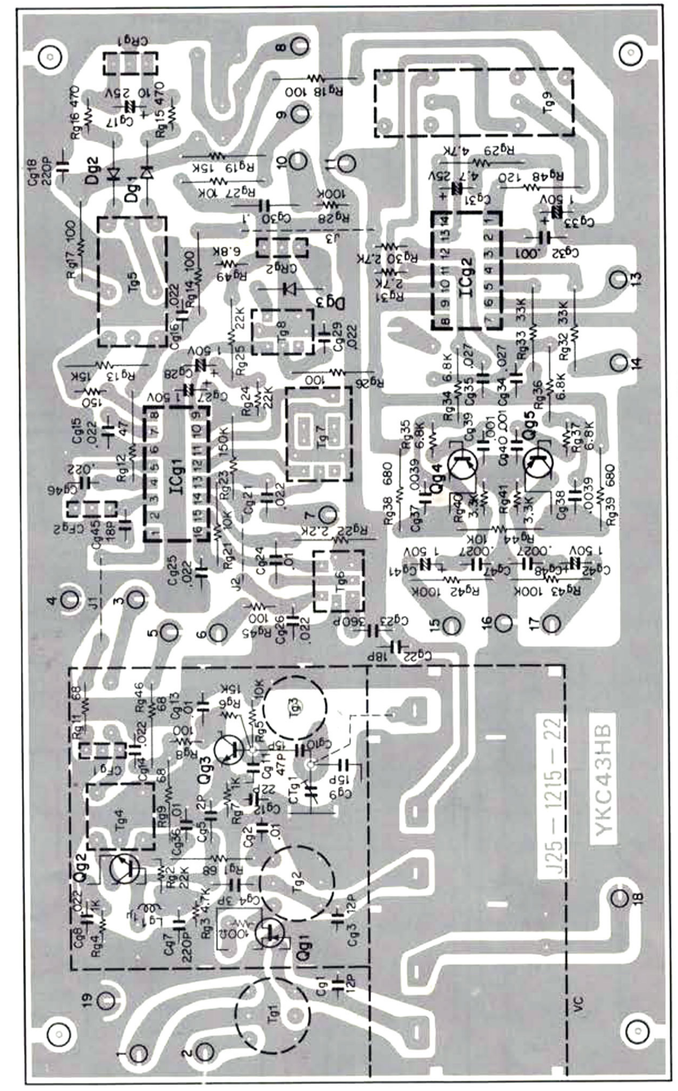

Qg1:2SK55 (D) or (E), Qg2:2SC1674 (L) or (K), Qg3:2SC1342 (A) or (B), Qg4, 5:2SA763WL5, Dg1, 2:1S2076 or 1S1555, Dg3:1N60, ICg1:AN217BB, ICg2:μPC554C (1)

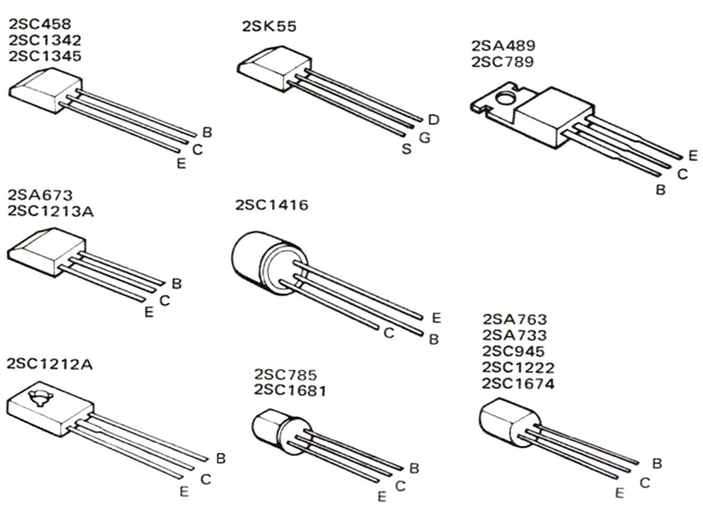

Semiconductor name	Substitutions
TUNER (X05-1300-10)	
2SK55 (D) or (E)	2SK19 (Y)
2SA763WL5	2SA733
2SC1342 (A) or (B)	2SC785 (R)
2SC1674 (L) or (K)	2SA733 (Q)
AN217BB	–
μPC554C (I)	–
AUDIO (X09-1150-10)	
2SA489	–
2SA673A (B) or (C)	2SA720 (Q), (C)
2SA733 (Q) or (R)	2SA763
2SA763WL4 or 5	2SA733
2SC789	2SC1419 (B), (C)
2SC945 (Q) or (R)	2SC458 (C)
2SC1222 (U) or (E)	2SC1345 (E)
2SC1213A (B) or (C)	2SC1318 (D), (R)
2SC1681 (GR) or (BL)	2SC1416
TA7136P	–

SCHEMATIC DIAGRAM

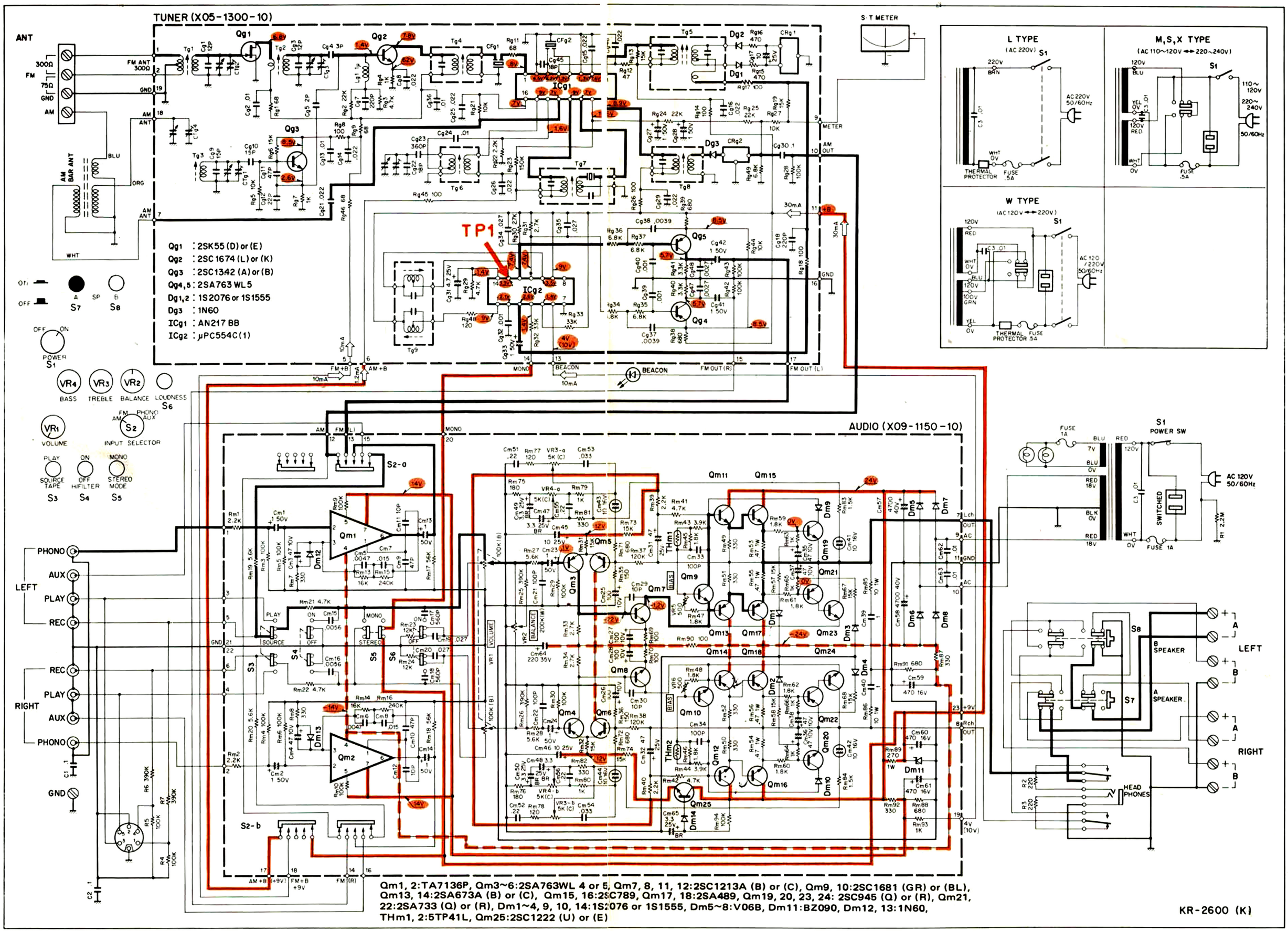

SPECIFICATIONS

FM TUNER SECTION

Frequency Range	88 MHz to 108 MHz
	87.5 MHz to 108 MHz
	(FTZ APPROVED)
Usable Sensitivity (IHF)	2.5 μV
Quieting Slope	4.5 μV 50 dB (MONO),
	55 μV 50 dB (STEREO)
Frequency Response	20 Hz to 15,000 Hz $^{+0}_{-2.0}$ dB
Harmonic Distortion	0.3% Mono
	(at 400 Hz 100% modulation)
	0.5% Stereo
	(at 400 Hz 100% modulation)
Signal to Noise Ratio	70 dB at 1 mV input (MONO),
	64 dB (STEREO)
Image Rejection	50 dB
Selectivity (IHF ALT channel)	50 dB DIN ±300 kHz 32 dB
IF Rejection	85 dB
Spurious Signal Rejection	75 dB
AM Suppression	45 dB
Capture Ratio	2.5 dB
Stereo Separation	33 dB at 1,000 Hz
	25 dB at 10,000 Hz
Sub Carrier Suppression	40 dB
Antenna Impedance	300 ohms Balanced &
	75 ohms Unbalanced

AM TUNER SECTION

Usable Sensitivity (IHF)	25 μV
Signal to Noise Ratio	48 dB at 1 mV input
Image Rejection	45 dB
Selectivity (IHF)	25 dB
IF Rejection	33 dB
Antenna	Built-in ferrite bar antenna,
	External antenna terminal

POWER AMPLIFIER SECTION

RMS Power Output	
Both channel driven	15 watts x 2 into 8 ohms at 20 Hz to 20,000 Hz
	18 watts x 2 into 8 ohms at 1,000 Hz
	18 watts x 2 into 4 ohms at 1,000 Hz (DIN)
Each channel driven	22 watts x 2 into 8 ohms at 1,000 Hz
	28 watts x 2 into 4 ohms at 1,000 Hz
Dynamic Power Output	52 watts into 8 ohms
	58 watts into 4 ohms
Total Harmonic Distortion	0.8% at rated power into 8 ohms
	0.1% at 1/2 rated power into 8 ohms at 1,000 Hz
Intermodulation Distortion	0.8% at rated power into 8 ohms
(60 Hz : 7 kHz = 4 : 1)	0.2% at 1/2 rated power into 8 ohms
Power Bandwidth	10 Hz to 70,000 Hz
Damping Factor	30 at 8 ohms
Speaker Impedance	Accept 4 ohms to 16 ohms

PRE-AMPLIFIER SECTION

Input Sensitivity & Impedance	
Phono	2.5 mV, 50 kohms
AUX	150 mV, 45 kohms
Tape Play	150 mV, 45 kohms
Maximum Input Voltage (rms)	
Phono	140 mV T.H.D. 0.8% at 1,000 Hz
Signal to Noise Ratio (IHF A Curve)	
Phono	70 dB
AUX	90 dB
Tape Play	90 dB
Output Voltage and Impedance	
Tape Rec. (Pin)	150 mV, 100 ohms
(Din connector)	30 mV, 80 kohms
Frequency Response	
Phono	RIAA Standard curve ±0.8 dB
AUX, Tape Play	20 Hz to 50,000 Hz ± 1.5 dB
Tone Controls	
Bass	±8 dB at 100 Hz
Treble	±8 dB at 10,000 Hz
Loudness Control (-30dB)	+8 dB at 100 Hz
	+5 dB at 10,000 Hz
High Filter	−10 dB at 10,000 Hz

GENERAL

Switches	
Speaker Selector	A, B, A + B
Input Selector	AM–FM–PHONO–AUX
Mode	MONO–STEREO
Function	HI–FILTER
Tape Monitor	PLAY–SOURCE
Others	LOUDNESS
	PHONES JACK
AC Outlets	Switched 1
Power Consumption	125 watts at full power
	15 watts at no signal
Dimensions	W 17-1/4" (438 mm)
	H 5-5/16" (135 mm)
	D 11-13/16" (300 mm)
Weight	14.3 lbs. (6.5 kg)

www.hifiengine.com

KENWOOD ELECTRONICS, INC.

■ 15777 SOUTH BROADWAY, GARDENA, CALIFORNIA 90248 U.S.A.
■ 72-02 51ST AVENUE, WOODSIDE. N.Y. 11377 U.S.A.

TRIO-KENWOOD ELECTRONICS, N.V.

■ HARENSESTEENWEG, 484. 1800 VILVOORDE,BELGIUM.

TRIO-KENWOOD ELECTRONICS, GmbH.

■ 6056 HEUSENSTAMM, RUDOLF-BRAAS-STR. 20, WEST GERMANY

TRIO-KENWOOD CORPORATION

■ 3-6-17 AOBADAI, MEGURO-KU, TOKYO, JAPAN.

© 1975-12 PRINTED IN JAPAN B51-0385-00 (T) 3,000

www.hifiengine.com