KENWOOD

HI/FI STEREO COMPONENTS

SERVICE MANUAL

KR-4200

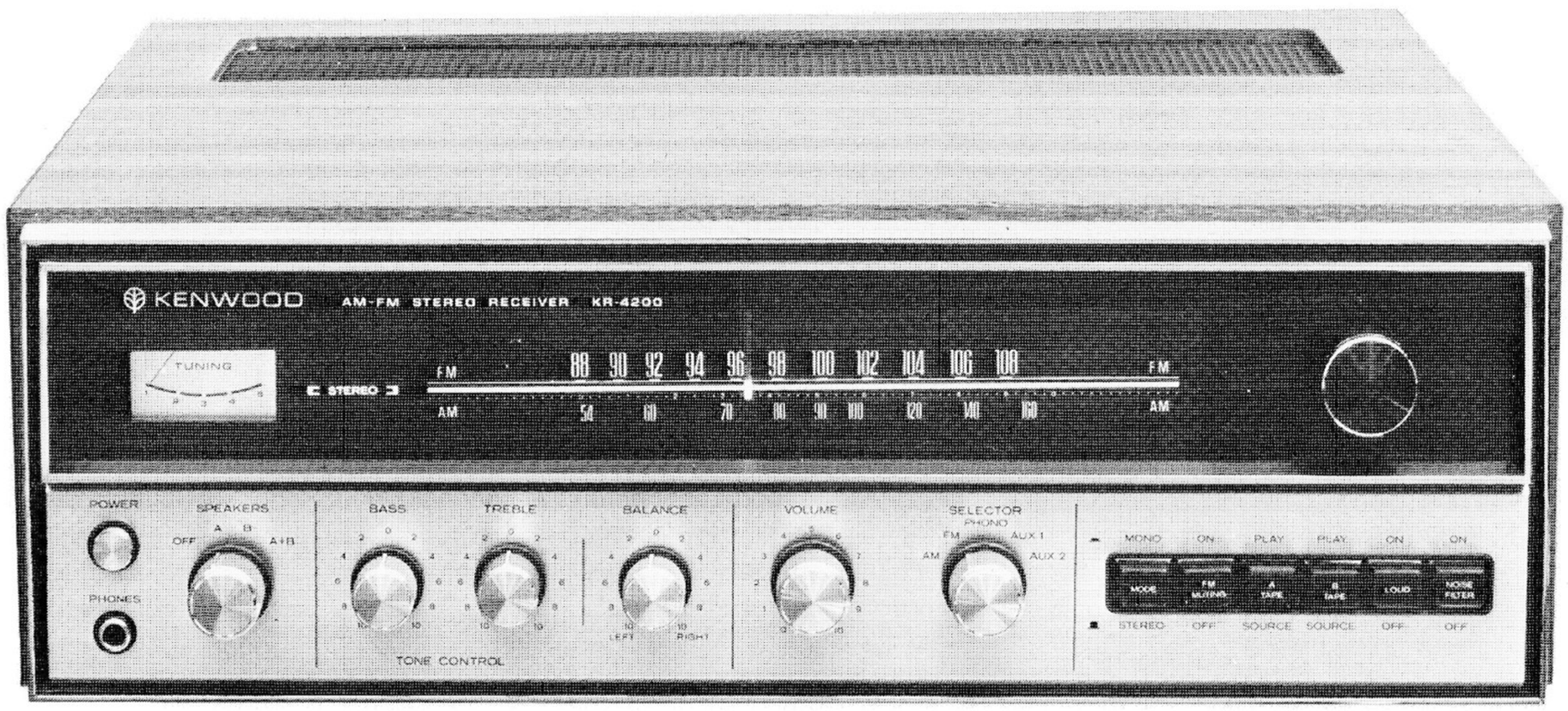

STEREO RECEIVER

www.hifiengine.com

TABLE OF CONTENTS

EXTERNAL VIEW 3
INTERNAL VIEW 4
DESCRIPTION OF CIRCUIT. 5
TROUBLESHOOTING 6
ADJUSTMENT OF TUNER SECTION 9
ADJUSTMENT OF AUDIO SECTION 13
REPLACEMENT OF POWER TRANSISTORS 14
DISASSEMBLY OF KR-4200 15
MOUNTING TEMPLATE 16
CORD STRINGING & TRANSISTOR LEADS 17
TABLE OF INTERCHANGEABLE OF TRANSISTORS 18
PARTS LIST 19
- POWER SUPPLY (X00-1200-10 or 01) 22
- TUNER (X05-1080-10) 23
- MAIN AMP (X07-1030-03) 27
- PREAMP (X08-1080-13) 29
- TONE AMP (X11-1100-10) 30
- PUSHBUTTON (X13-1270-10) 31

PC BOARD 32
- POWER SUPPLY 32
- PUSHBUTTON 32
- TUNER 33
- MAIN AMP 34
- PREAMP 35
- TONE AMP 35

BLOCK DIAGRAM 36
CIRCUIT DIAGRAM 37
COLOR CODE 38
SPECIFICATIONS 39

www.hifiengine.com

EXTERNAL VIEW

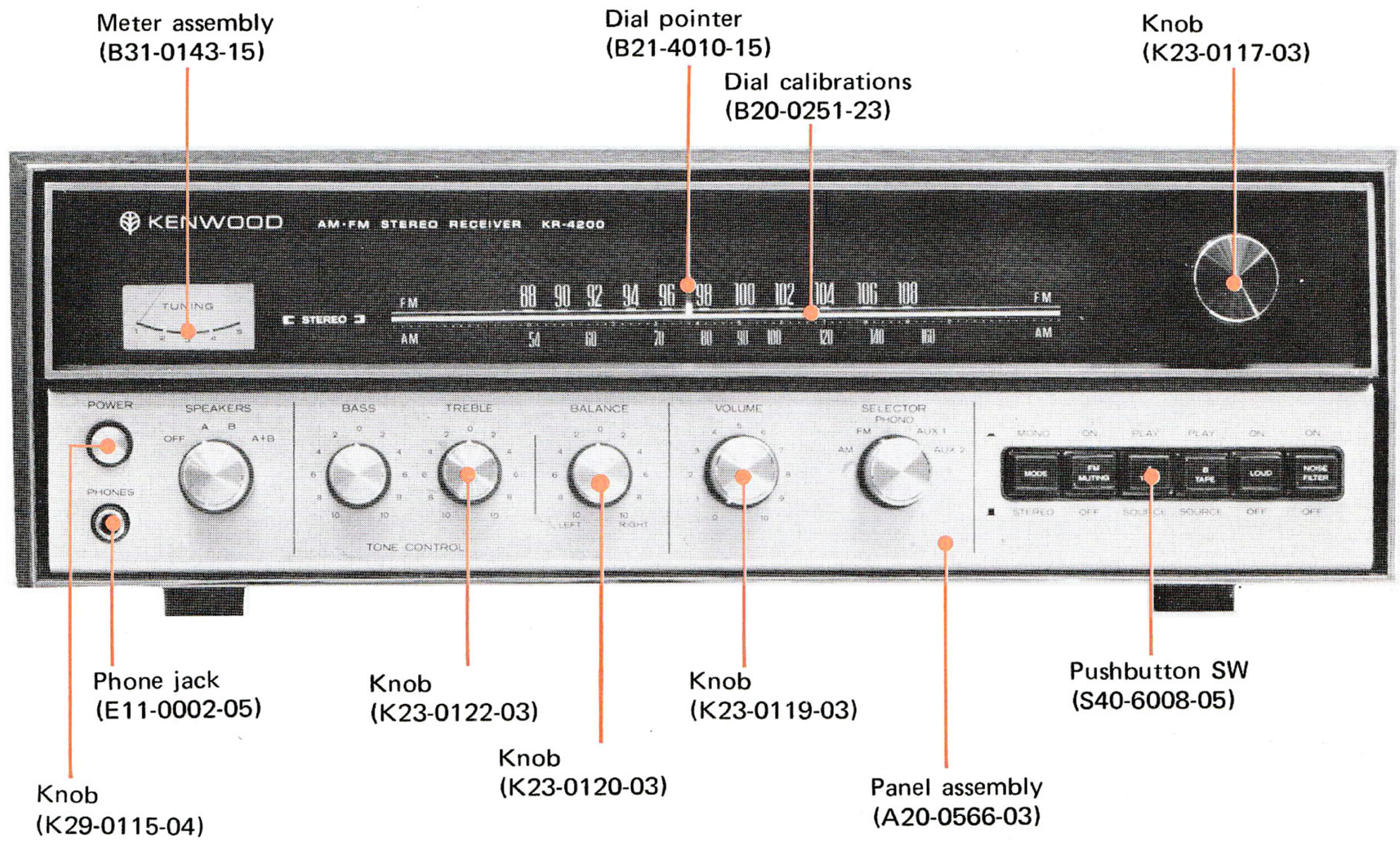

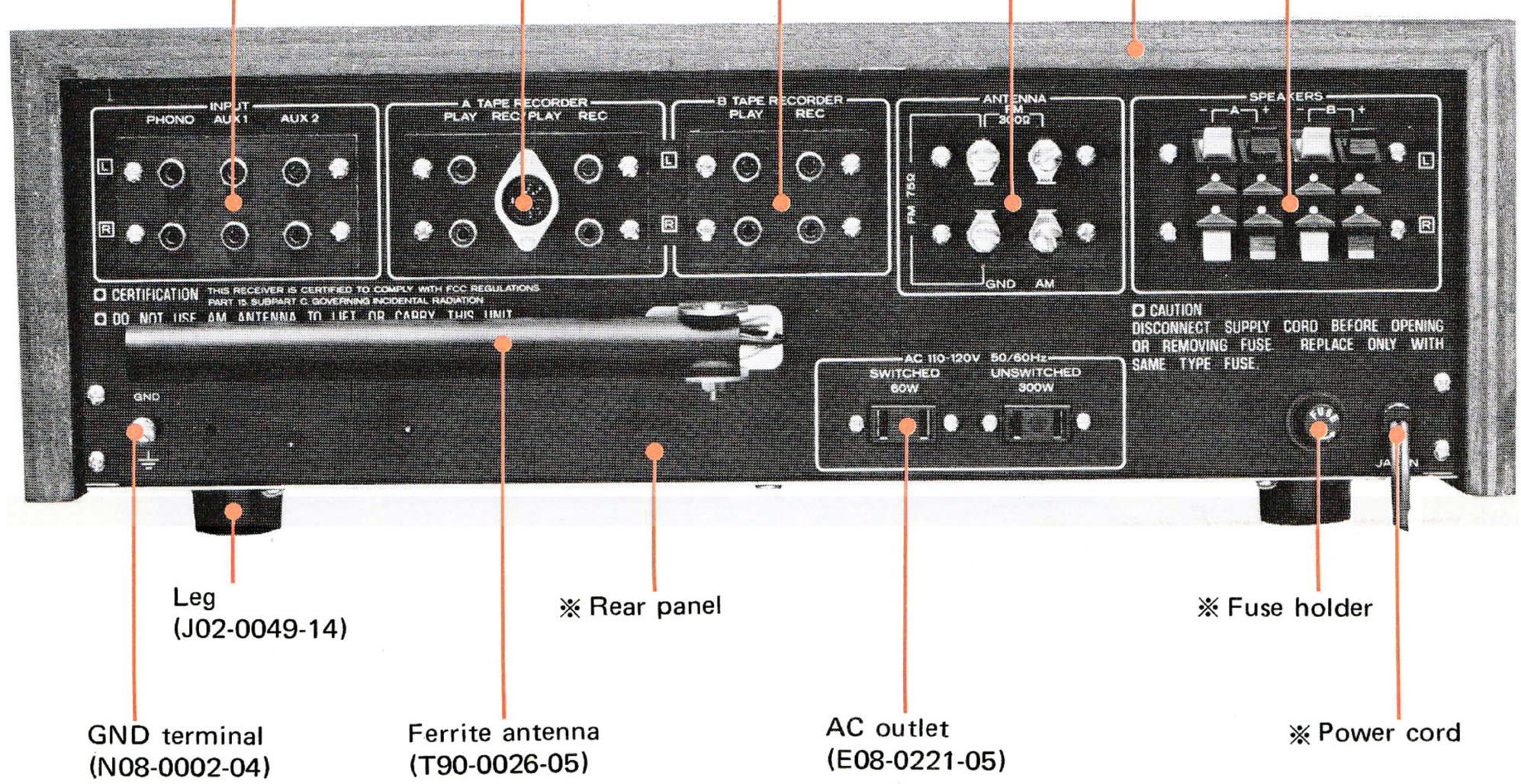

※ Refer to parts list.

INTERNAL VIEW

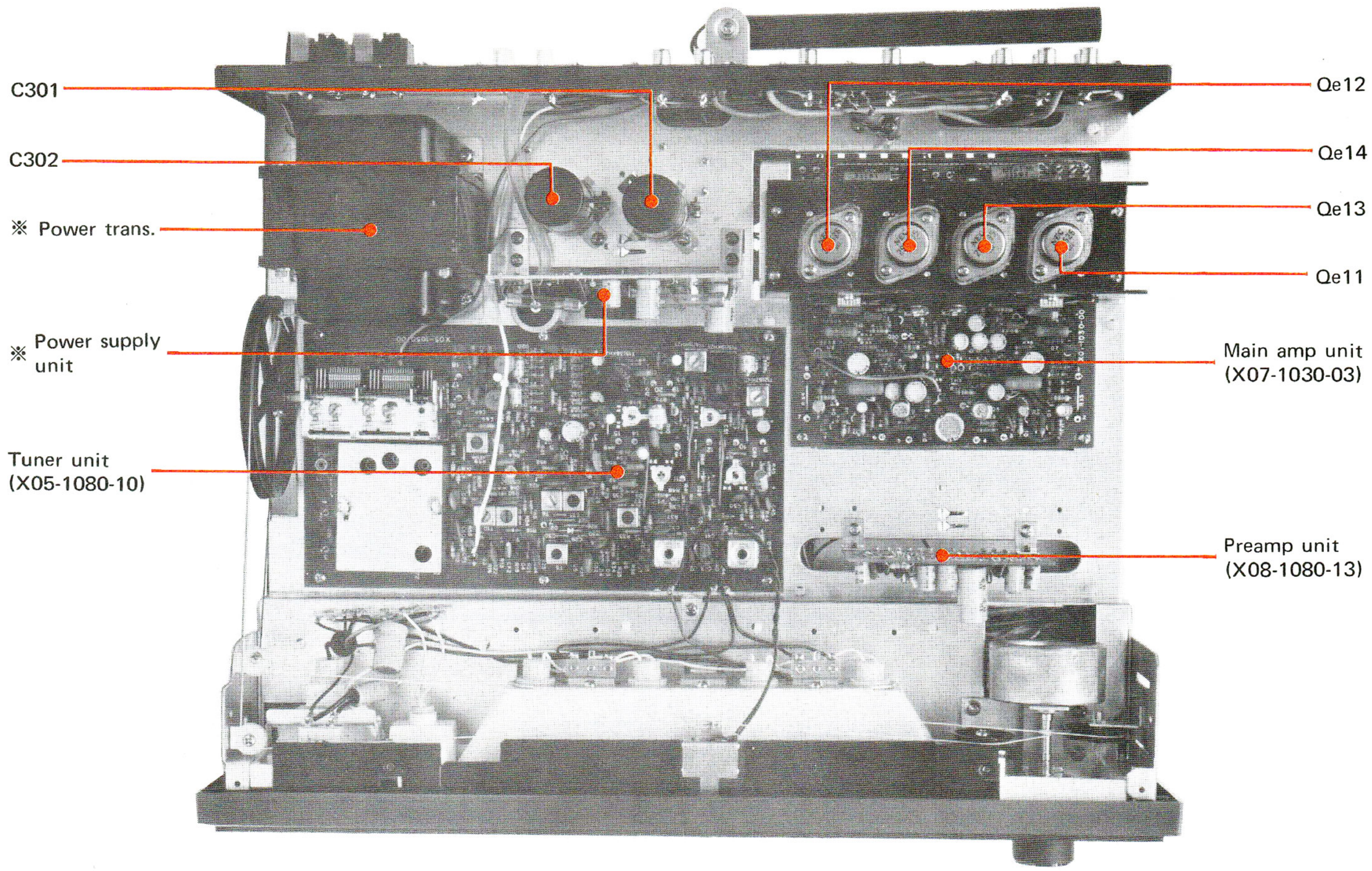

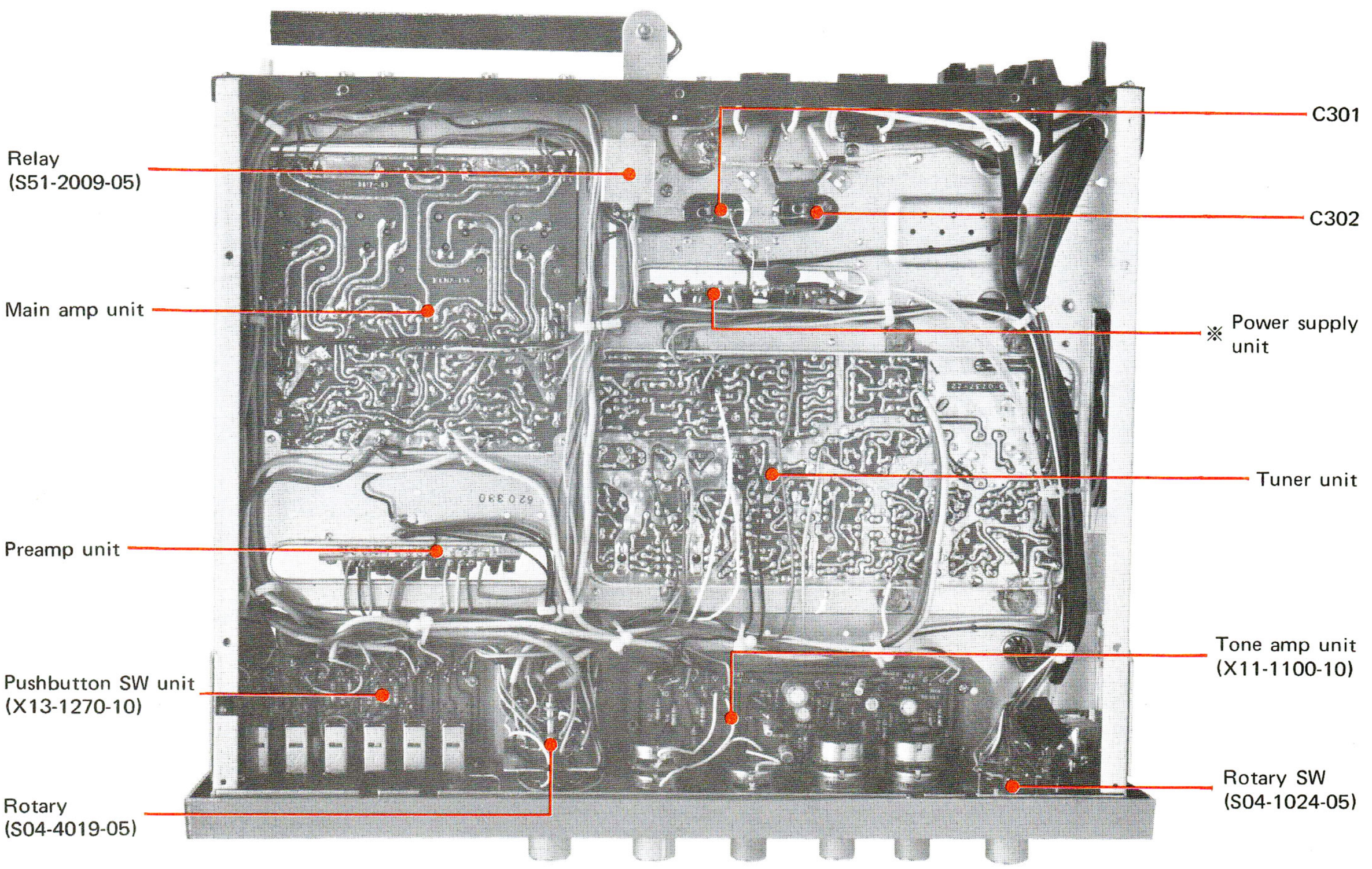

※ Refer to parts list.

DESCRIPTION OF CIRCUIT

Protection Circuit

1. Muting Function

When the power switch is set to ON, shock noise may enter the loudspeaker system due to the effect of overcurrent. In the KR-4200 this is, however, prevented by use of a protection relay. With the power switch set to ON, current of the B source passes through this relay and flows into C_e21 of the main amplifier. When C_e21 has been charged up, the base potential of Q_e19 becomes zero and thus Qe 19 is turned off. Since Qe 19, 20 are the Schmidt circuit, Qe 20 is turned on and the relay operates. Thus sound can come out of the loudspeaker system. The duration of muting (operating time of this relay) is about 3 seconds which is dependent upon the time constant of Ce21 and Re50 in the circuit.

2. ASO (Area of Safety Operation)

If the power transistor receives a flow of abnormal Ic exceeding the ASO level, the emitter potential will be raised. This potential is detected by Q_e15 or Q_e16 and is delivered to Q_e18. Namely voltage is generated at the emitter, base potential of Q_e15 is raised, and Q_e15 is turned on. Then the base potential of Q_e18 drops since current flows in the transistor of the preceding stage. Consequently Q_e18 also turns on.
In this state, collector current of Q_e18 flows, base potential of Q_e19 is raised, Q_e19 is turned on, Q_e20 is turned off, and the relay operates also. Thus the power transistor can be protected against abnormal current.

3. Center Voltage Drift Protection

Center potential of the power transistor must always be maintained at zero volt. If center potential causes a drift of more than 0 ±3 volts for a certain fault, this potential will be detected by diodes regardless of the polarity. Thus voltage is applied to the base of Q_e17, which therefore tunrs on. The base potential of Q_e18 drops by collector current and Q_e18 is turned on. In the similar way, the loudspeaker system is protected by the on-off function of the relay.

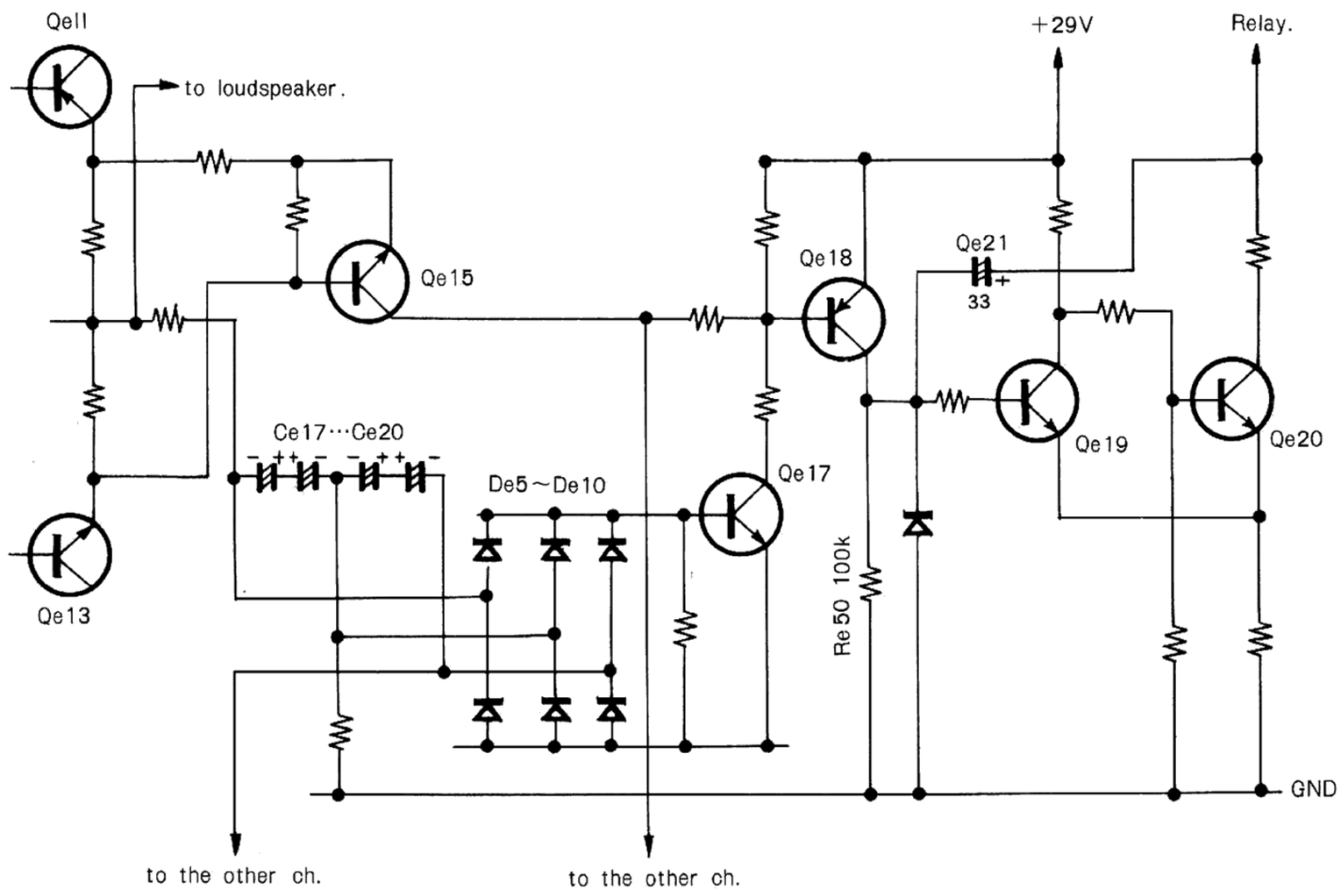

www.hifiengine.com

TROUBLESHOOTING

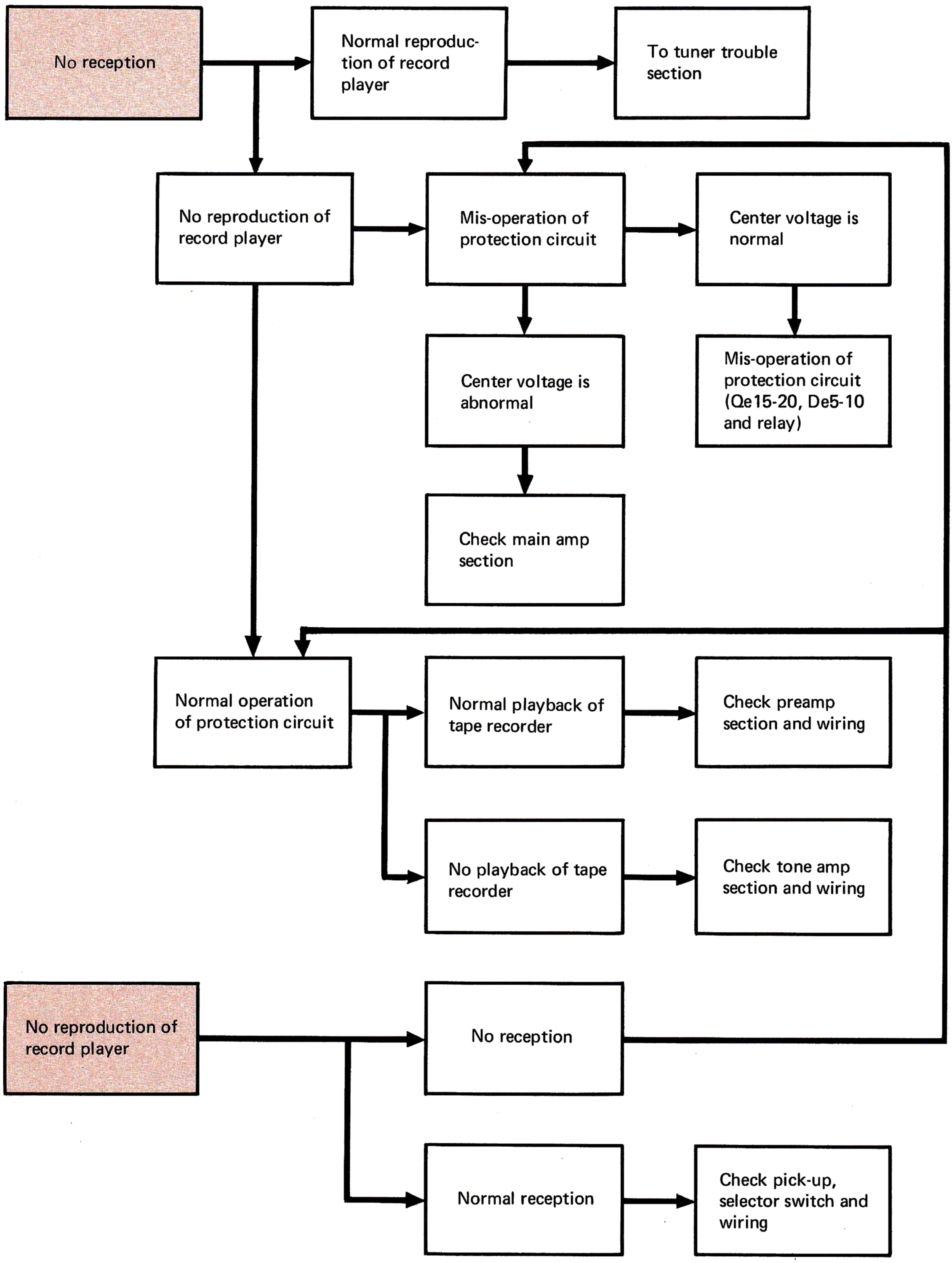

www.hifiengine.com

TROUBLESHOOTING

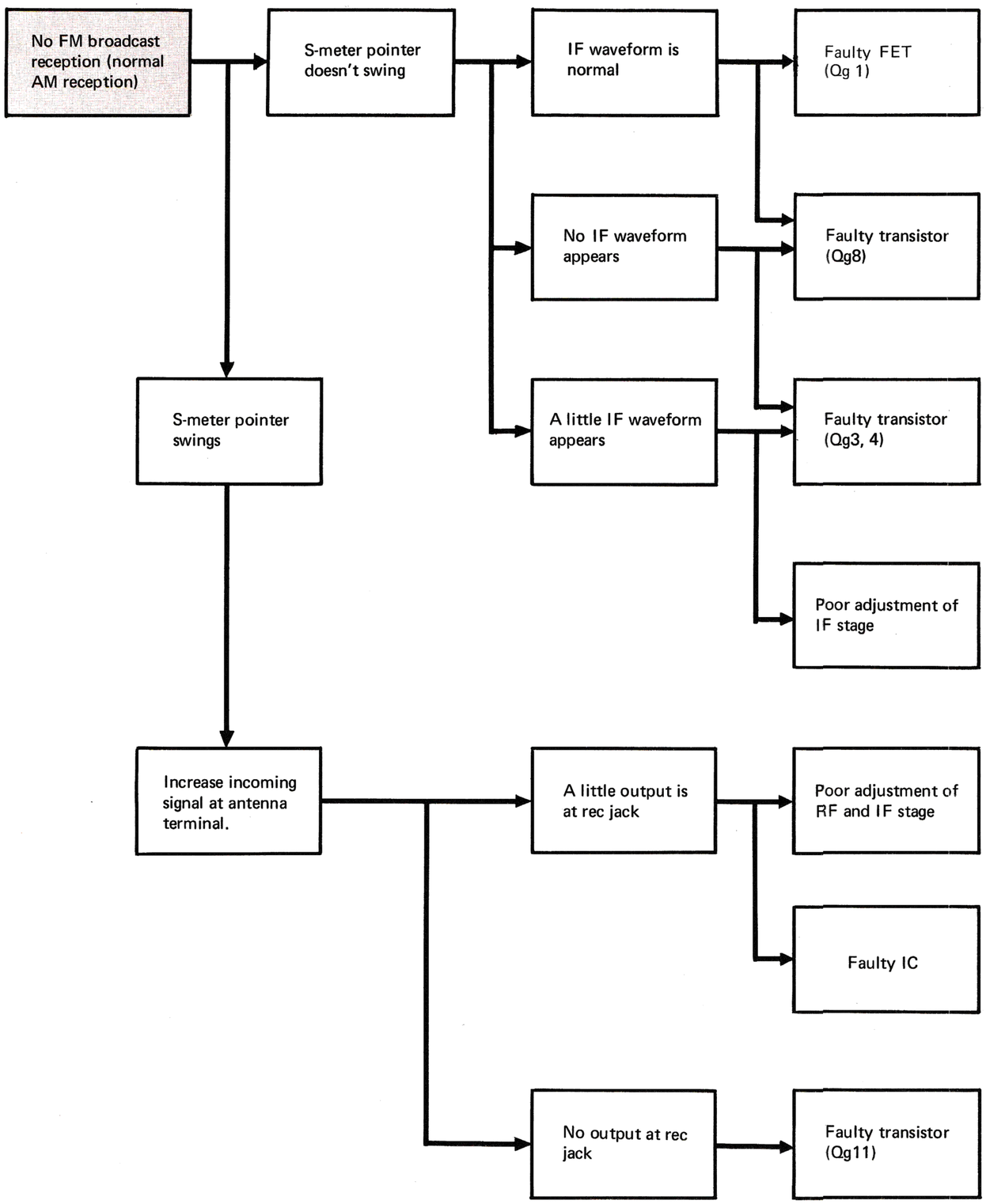

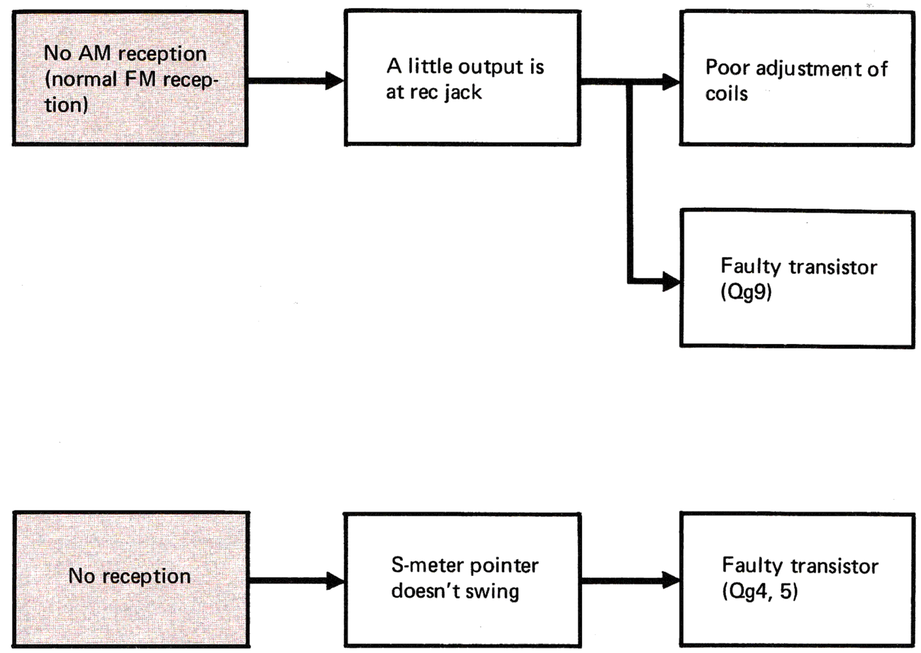

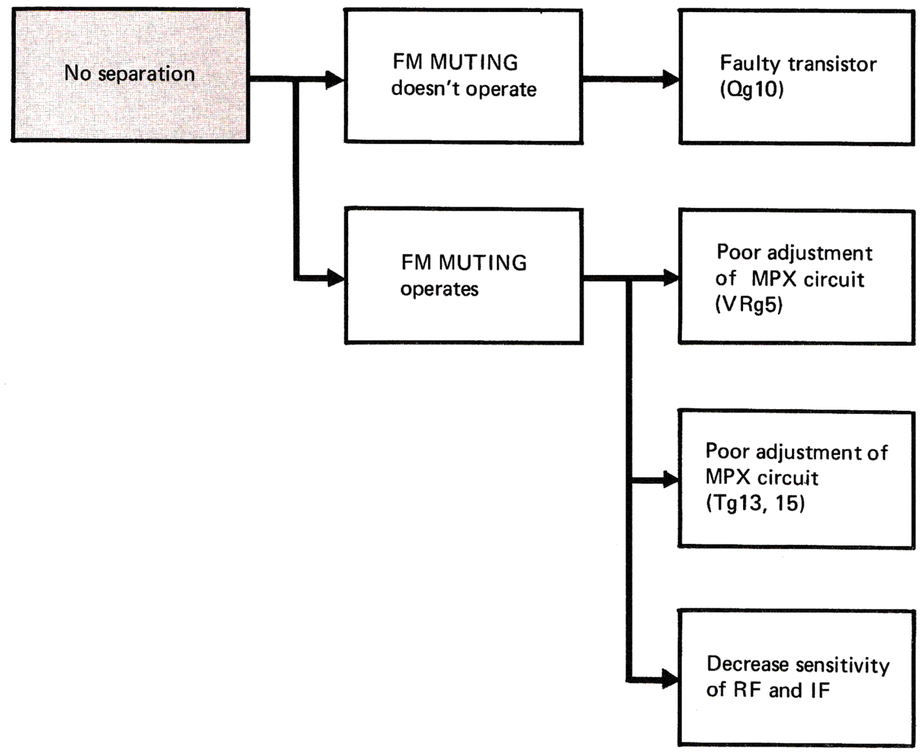

www.hifiengine.com

TROUBLESHOOTING

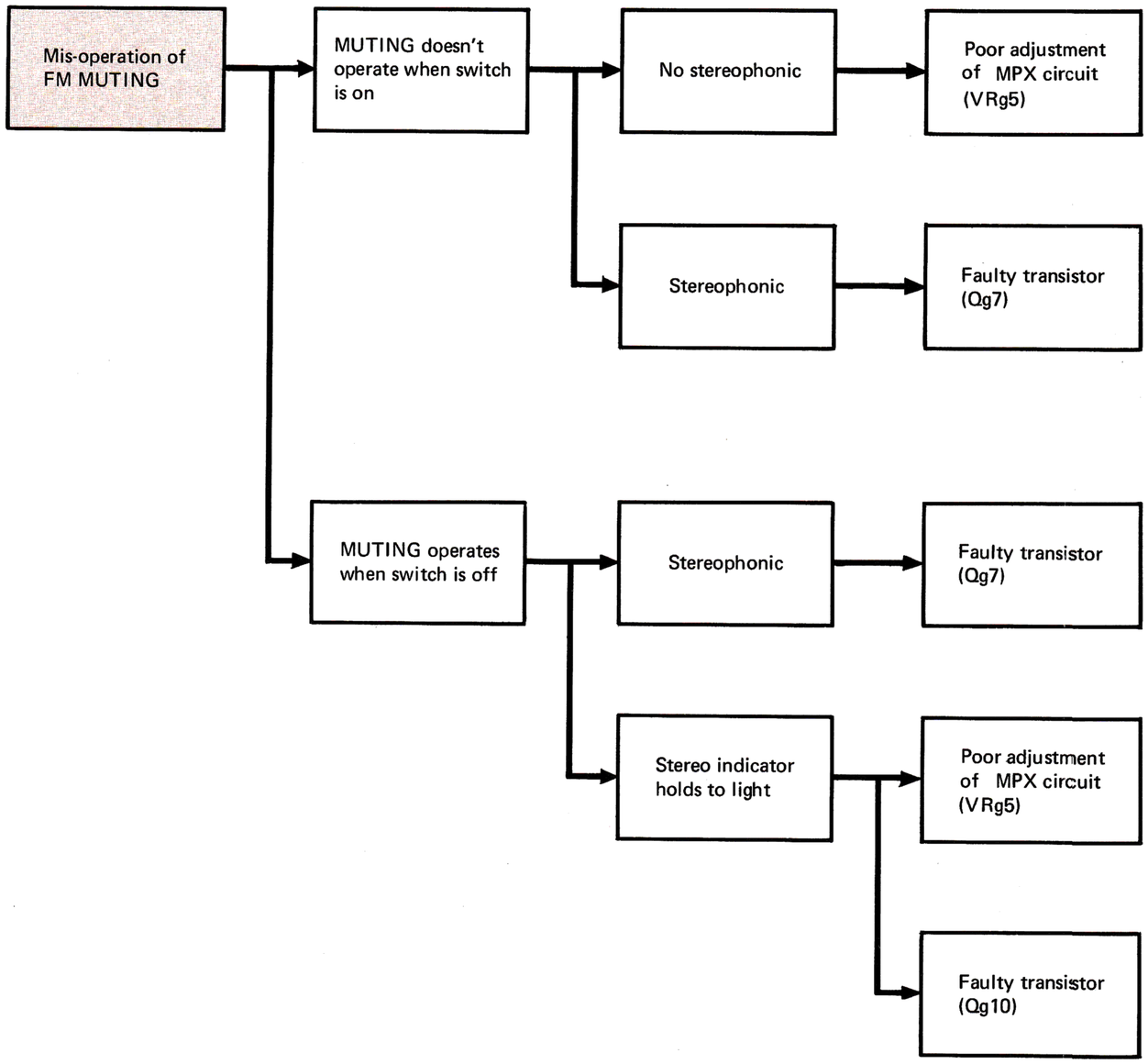

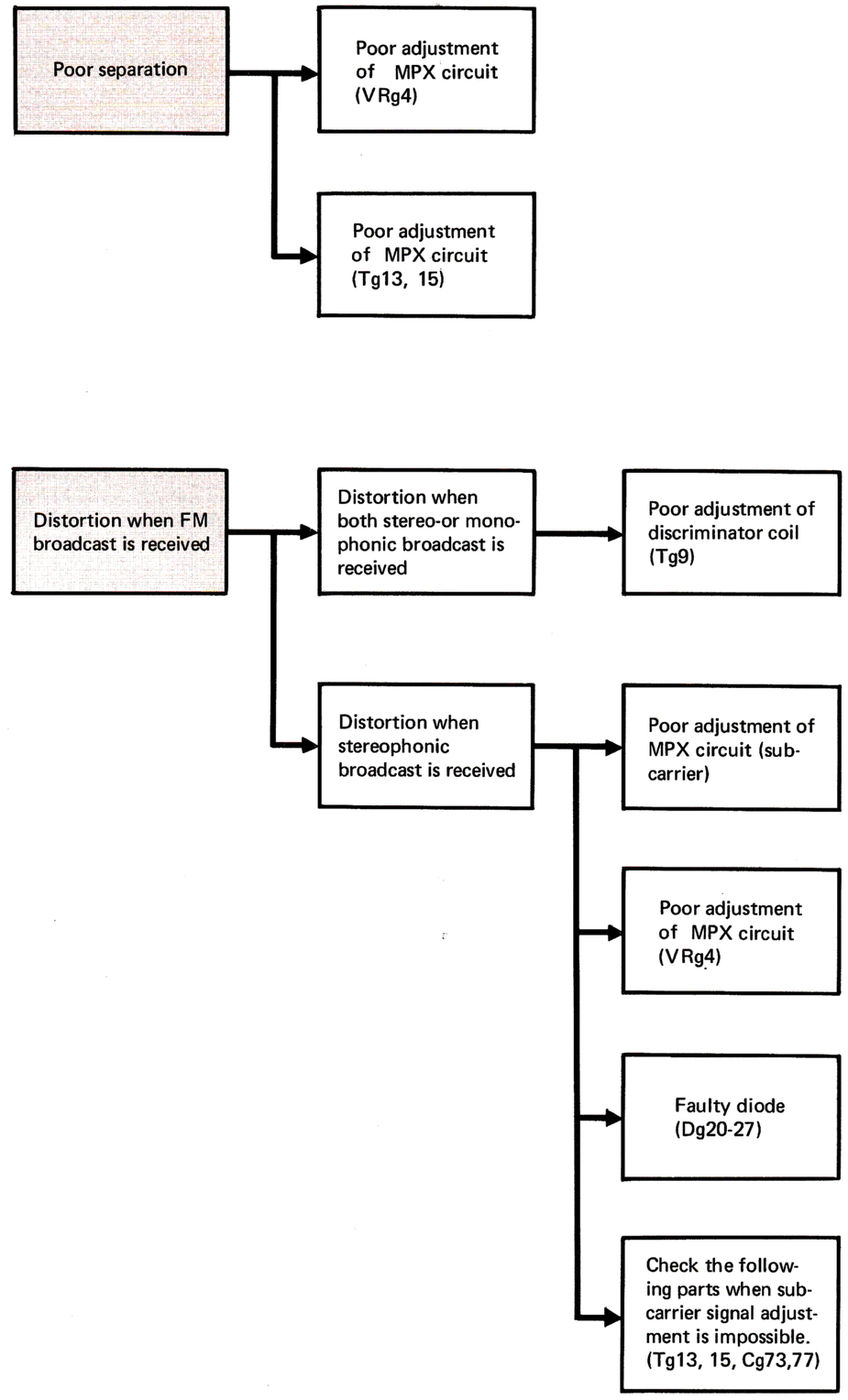

ADJUSTMENT OF TUNER SECTION

BEFORE ADJUSTMENT

* Tuning dial is set to the proper point corresponding to no radio stations.
* The sweep and the r.f. generator are set to the lowest response possible on oscilloscope.
* When connecting the r.f. generator to the antenna terminal using the dummy antenna . . . . refer to figure.
* Use the insulated screwdriver adjusting the i.f.t..
* SELECTOR is FM AUTO position.
* FM MUTING is OFF position unless it is required.
* Test point shown in the circuit diagram.

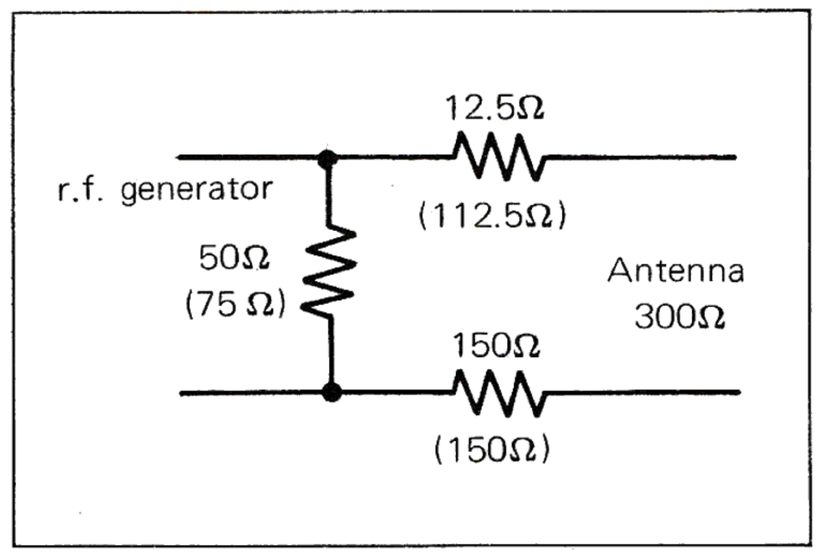

▲ Dummy antenna

ADJUSTING FM-IFT

1. Connect the sweep generator set to 10.7 MHz to test point 1 (TP1) through a capacitor 5pF.
2. Connect the oscilloscope to test point 2.
3. Adjust i. f. t. Tg4, 5, 8 so that the output is at maximum.

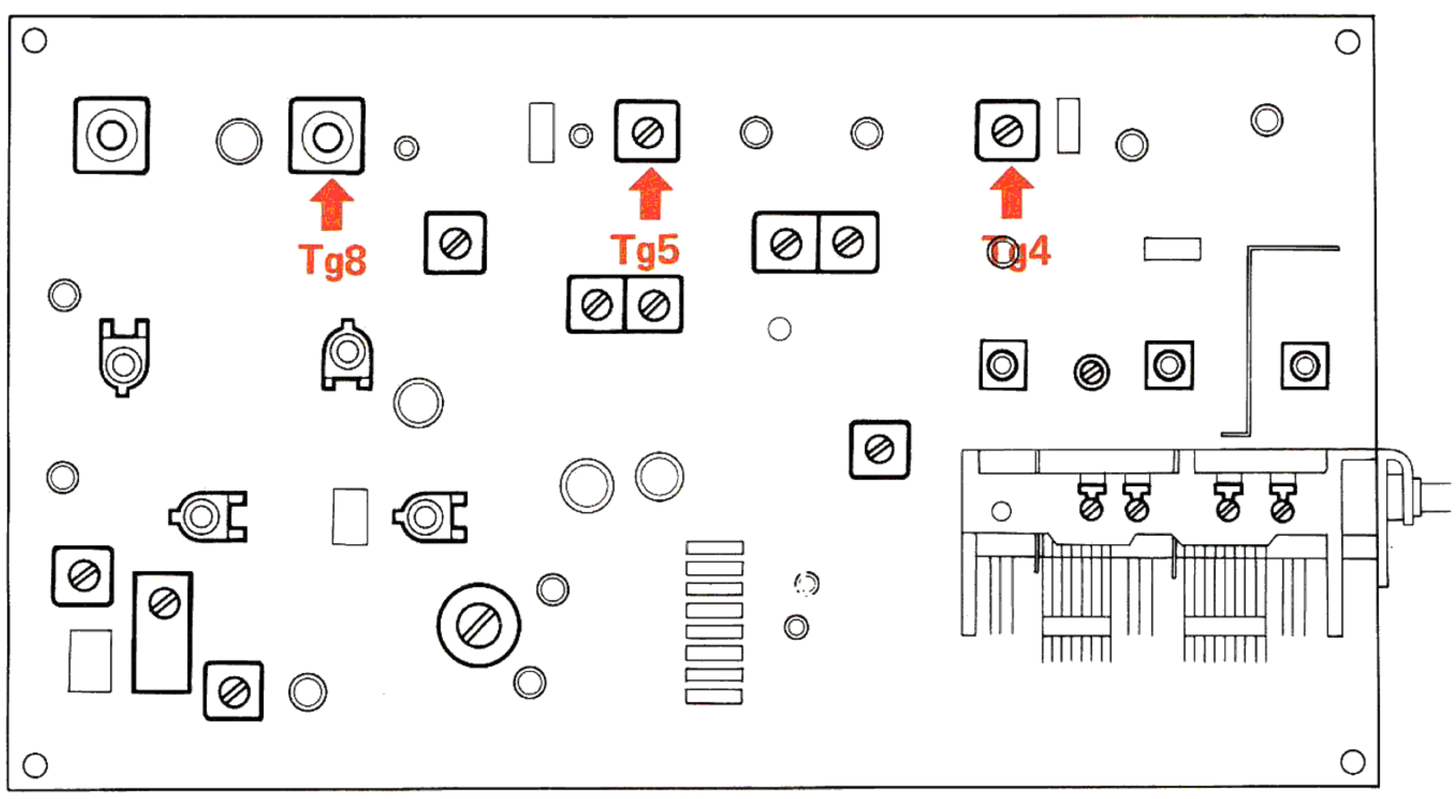

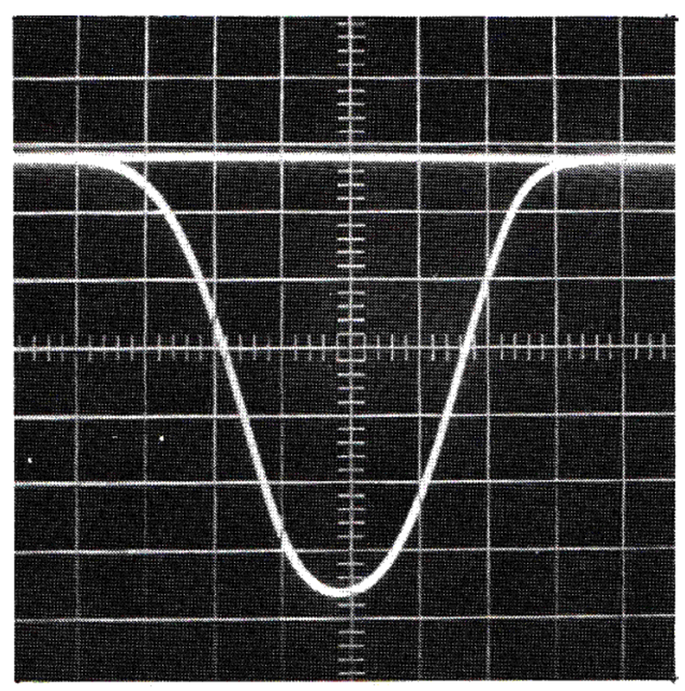

ADJUSTING DISCRIMINATOR

1. Connect the sweep generator set to 10.7 MHz to test point 1 through a capacitor.
2. Connect the oscilloscope to test point 3.
3. Adjust the discriminator coil Tg9 so that the output is at maximum.

ADJUSTING TRACKING

1. Connect the r.f. generator to antenna terminal through a dummy antenna.
2. Set the r.f. generator to 90 MHz, the modulation of 400 Hz, the deviation of 75 kHz, and the input of 10 μV.
3. Connect the VTVM to rec jack.
4. Set the dial pointer to 90 MHz on the dial calibrations.
5. Adjust the core of r. f. t. Tg1, 2 and local oscillator coil Tg3 so that the output is at maximum.

www.hifiengine.com

ADJUSTMENT OF TUNER SECTION

1. Set the r.f. generator to 106 MHz, the modulation of 400 Hz, the deviation of 75 kHz and input of 10 μV.
2. Set the dial pointer to 106 MHz on the dial calibrations.
3. Adjust trimmers CTg1 ~ 3 so that the output is at maximum.

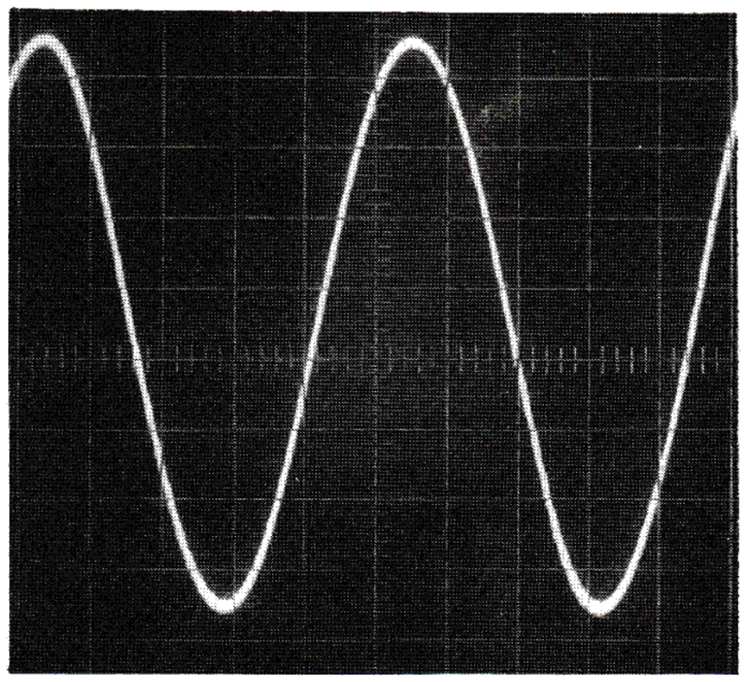

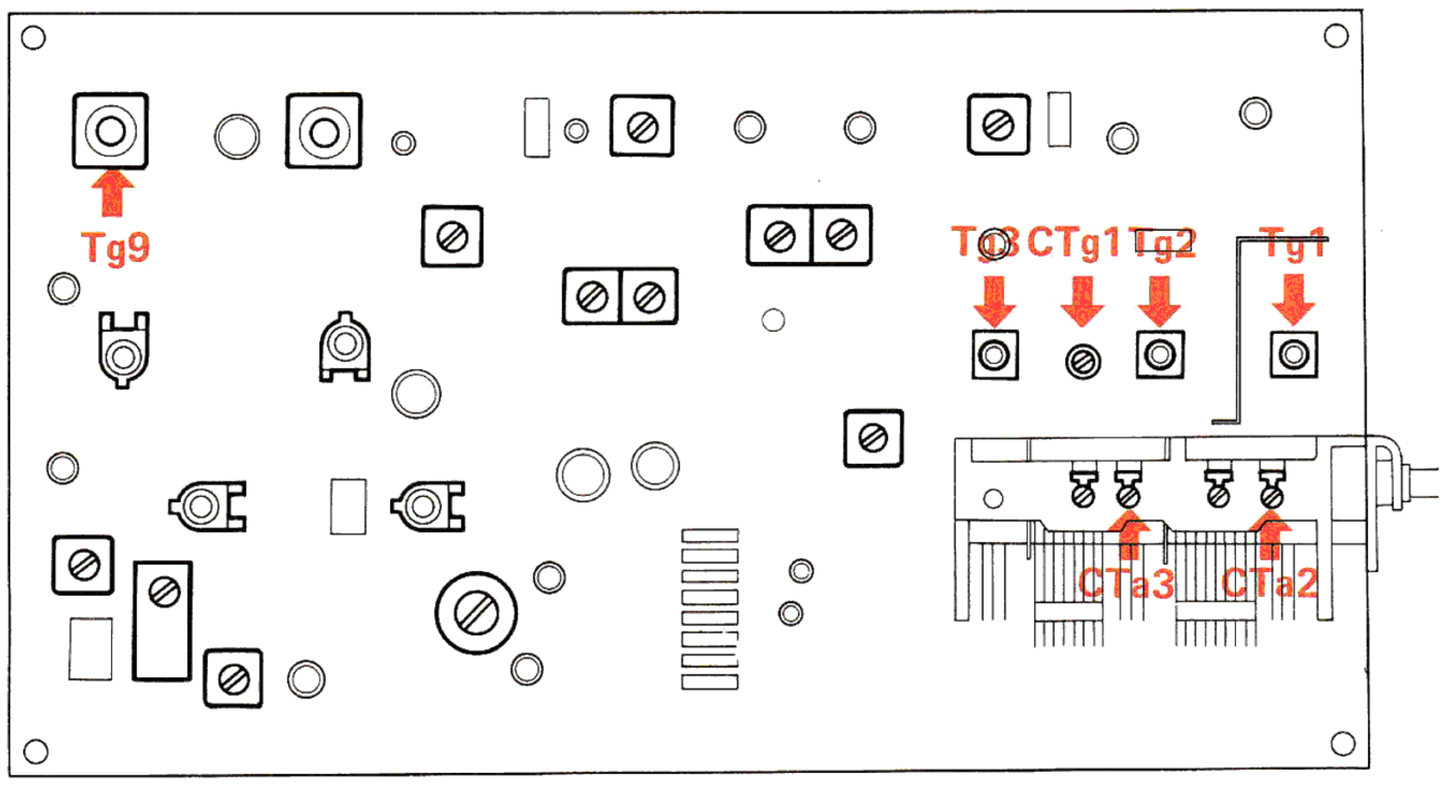

SCA FILTER

1. Connect the audio generator set to 67 kHz to test point 3.
2. Connect the VTVM to test point 4.
3. Adjust the core of Tg12 so that the output is at minimum.

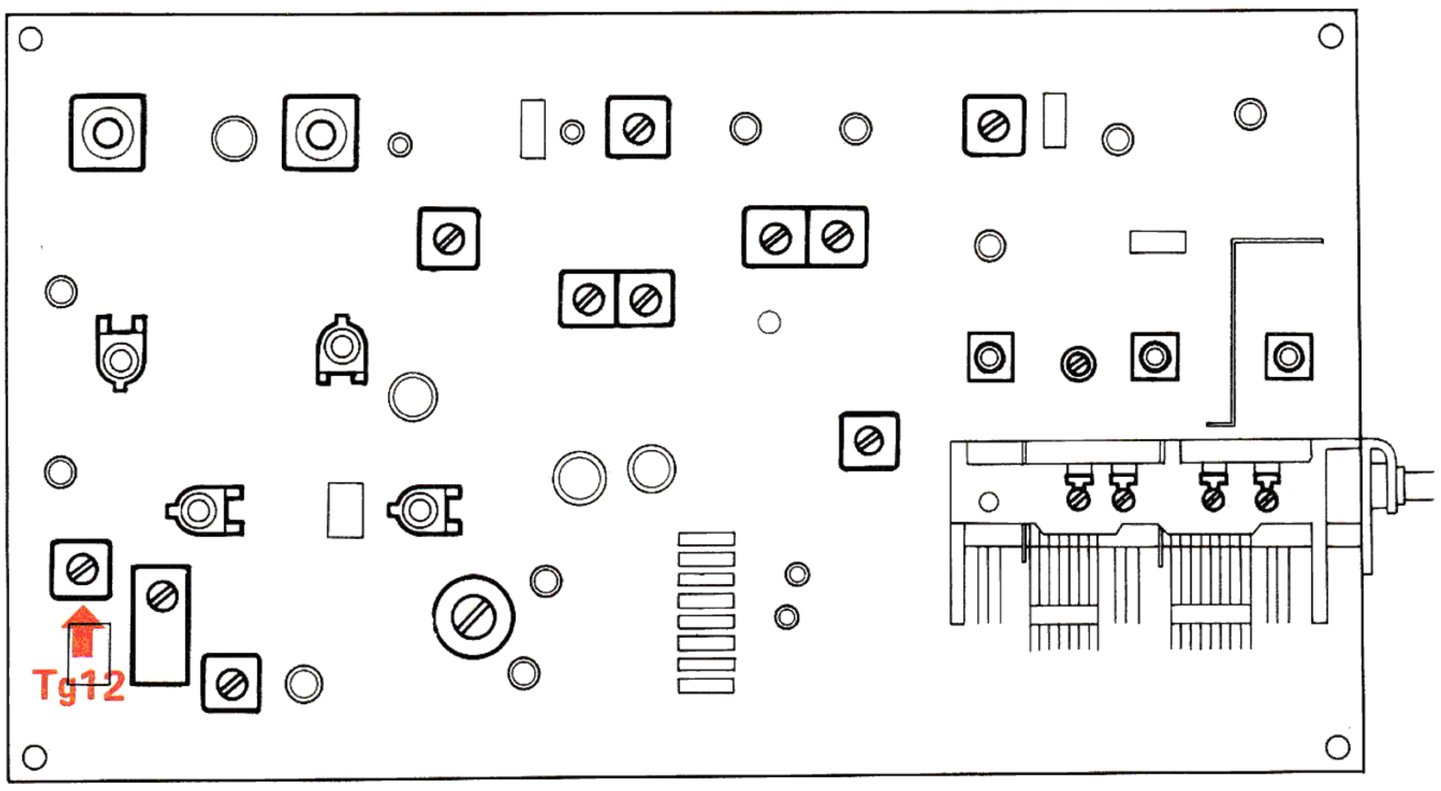

www.hifiengine.com

ADJUSTMENT OF TUNER SECTION

ADJUSTING MPX

1. Connect the r.f. generator set to 98 MHz, modulation of 400 Hz, deviation of 75 kHz, to antenna terminal through a dummy antenna and VTVM to rec jack.
2. Adjust the potentiometer VRg3 so that the output is 1.5V.
3. Set the MPX generator to the followings.
   SELECTOR → A + B PHASE → NORMAL
   MODULATION → 400 Hz DEVIATION → 67.5 kHz
   OUTPUT → EXT jack of r.f. generator
4. Connect the r.f. generator to antenna terminal and the VTVM to test point 5.
5. Adjust the core of Tg13, 14 so that the output is at maximum.
6. Switch the selector of MPX generator to A – B (reverse).
7. Remove the VTVM to rec jack.
8. Adjust the core of Tg15 so that the output is at maximum.
9. Switch the selector and deviation of MPX generator to A + B and 40 kHz.
10. Adjust potentiometer VRg5 so that the stereo indicator is on.
11. Switch the selector of the MPX generator to A (R).
12. Adjust the potentiometer VRg4 so that left output is at minimum.
13. Switch the selector of the MPX generator to B (L).
14. Adjust the potentiometer VRg4 so that the right output is at minimum.

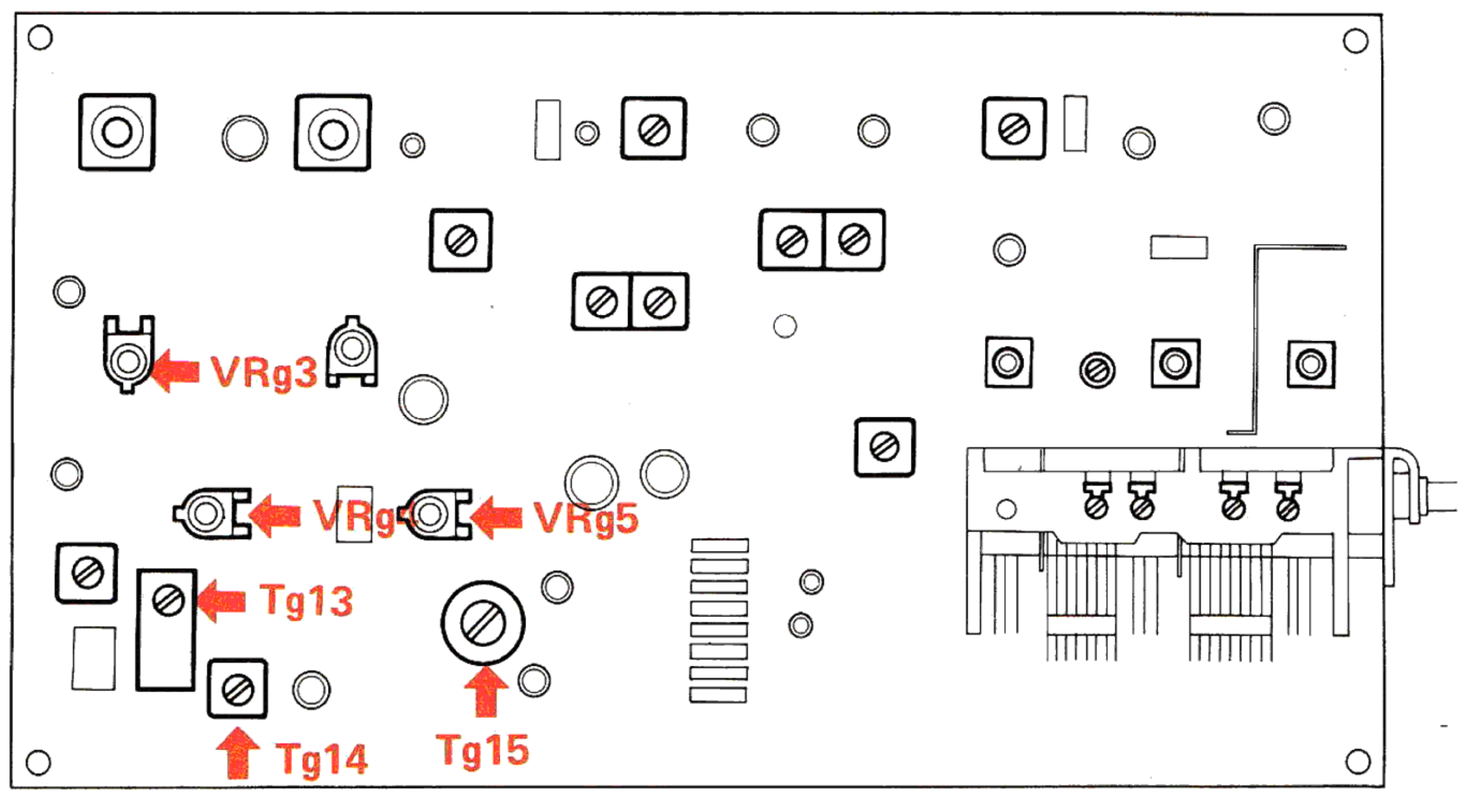

NOTE: In case of difference between right and left channel, set the potentiometer VRg4 to average.

ADJUSTING AM-IFT

1. Connect the sweep generator set to 455 kHz to test point 6.
2. Connect the oscilloscope to the test point 7.
3. Adjust the core of i. f. t. Tg10, 6, 7 so that the output is at maximum.

www.hifiengine.com

ADJUSTMENT OF TUNER SECTION

ADJUSTING TRACKING

1. Connect the r.f. generator set to 600 kHz, modulation of 30% at 400 Hz to antenna terminal.
2. Connect the VTVM to the rec jack.
3. Set the dial pointer to the 600 kHz on the dial calibrations.
4. Adjust the OSC-trans. Tg11 and ferrite antenna so that the output is at maximum.

1. Connect the r.f. generator set to 1,400 kHz, modulation of 30% at 400 Hz to antenna terminal.
2. Connect the VTVM to the rec jack.
3. Set the dial pointer to the 1,400 kHz on the dial calibrations.
4. Adjust the trimmer CTg4, 5 so that the output is at maximum.

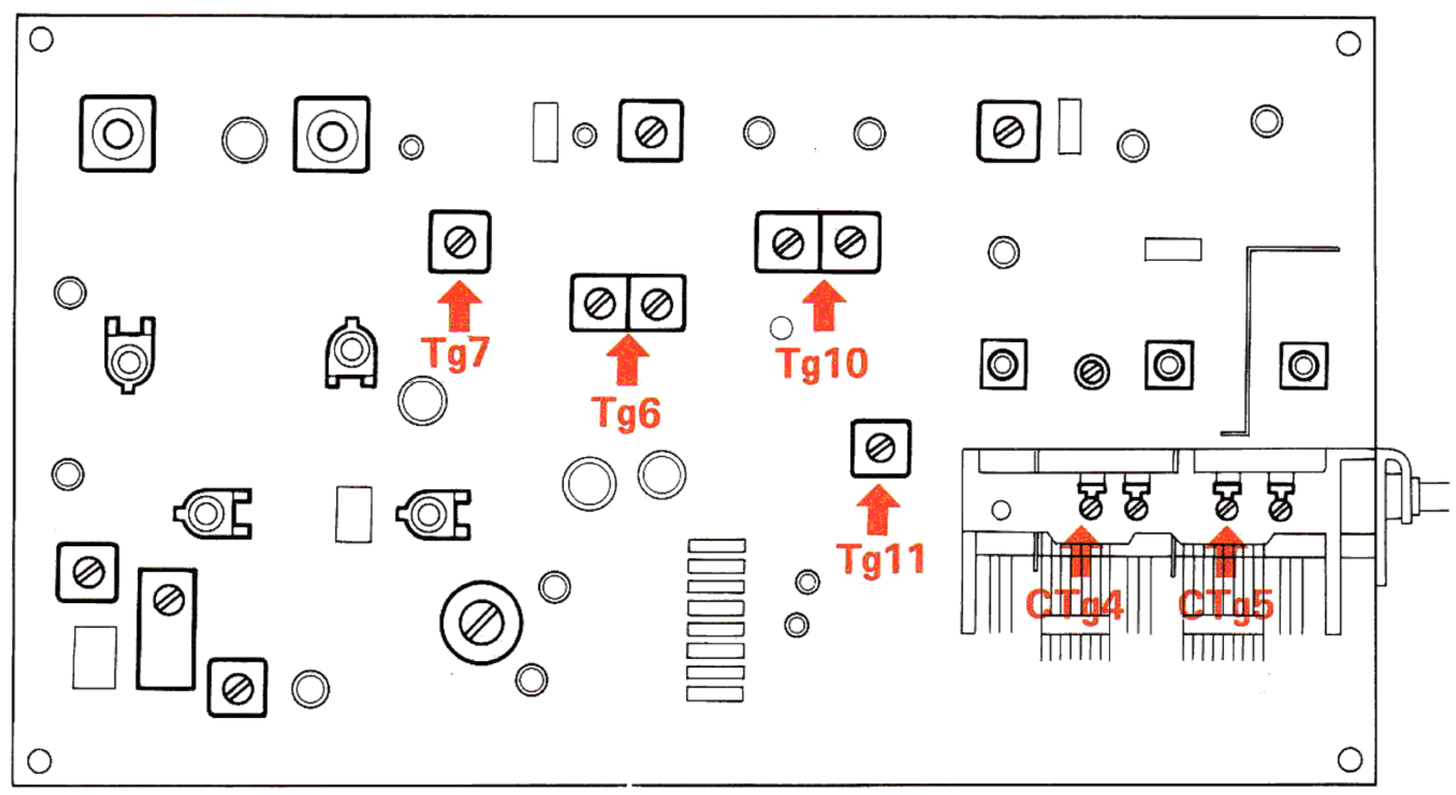

ADJUSTING METER

1. Connect the r.f. generator to antenna terminal.
2. Set the dial pointer to the 1,000 kHz on the dial calibrations.
3. Adjust potentiometer VRg1 so that the signal meter indicates "5".

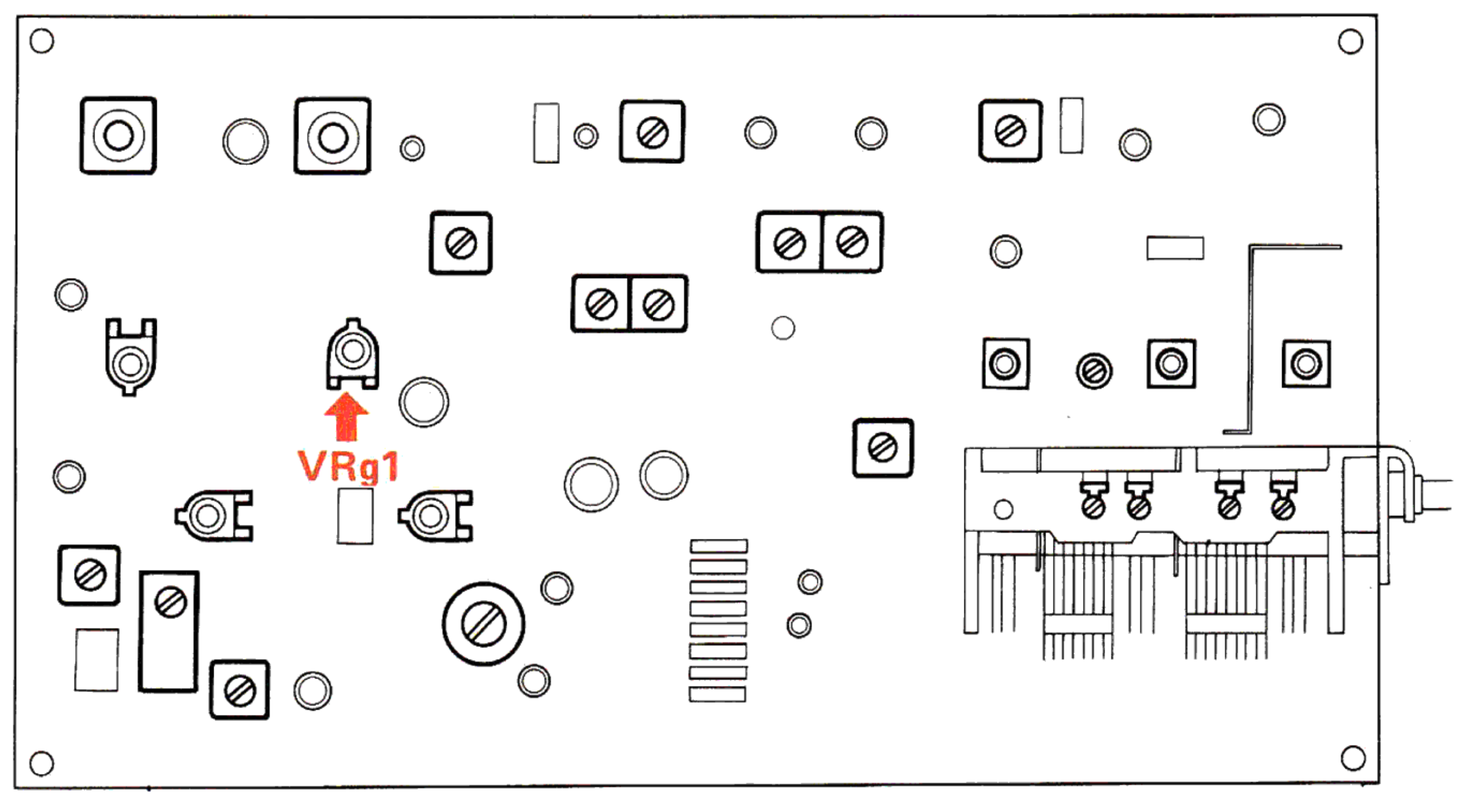

www.hifiengine.com

ADJUSTMENT OF AUDIO SECTION

BIAS ADJUSTMENT

WHEN USING TESTER AS AMMETER

1. Set PC trimmer potentiometer (VRe1, 2) to its min.
2. Couple tester (as ammeter) to terminal 20 and negative power supply lead.
3. Adjust PC trimmer potentiometer (VRe2) so that tester reading is 40mA.
4. Remove tester to terminal 19 and negative power supply lead.
5. Adjust PC trimmer potentiometer (VRe1) so that tester reading is 30mA.

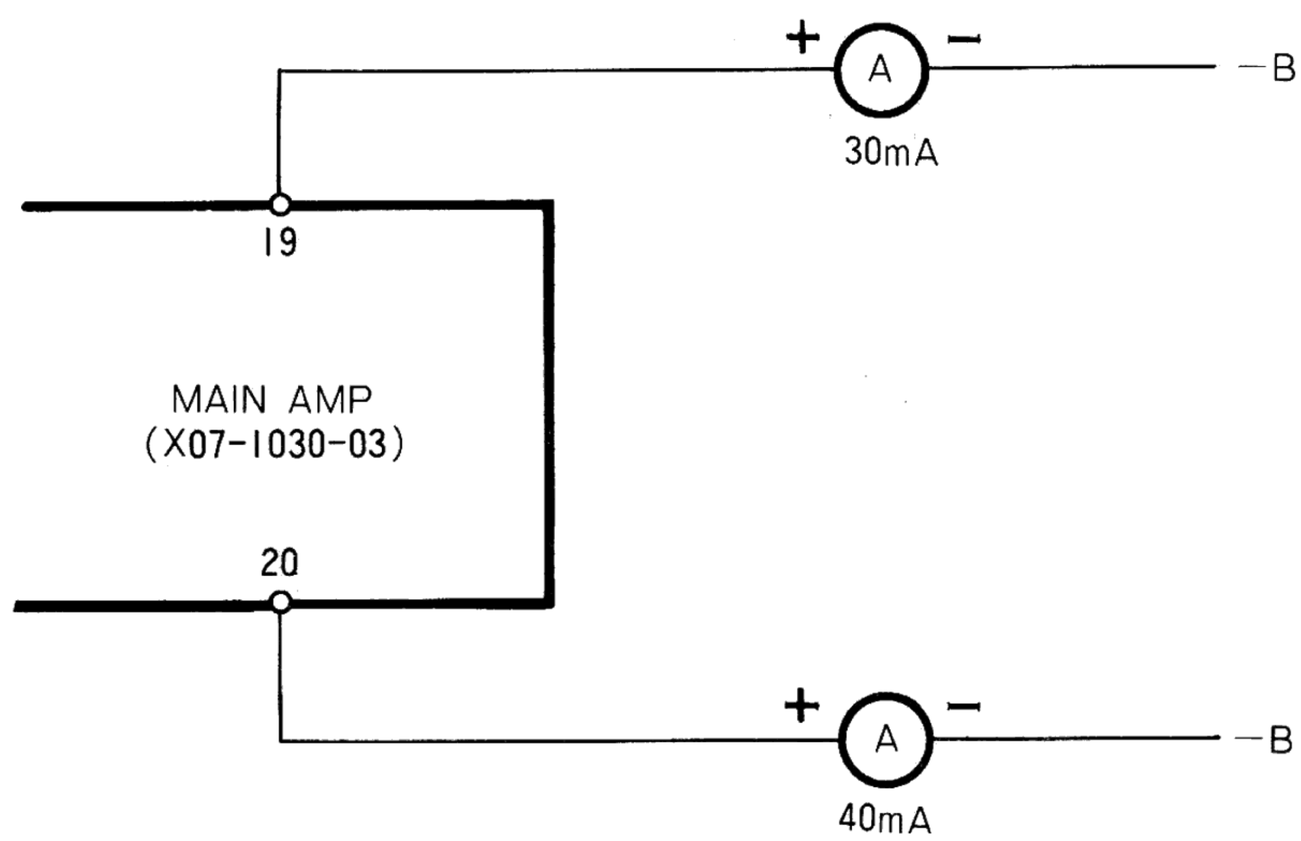

WHEN USING TESTER WITH LOW LEVEL RANGE (LESS THAN .3V RANGE)

1. Set potentiometer (VRe1, 2) to its min..
2. Connect tester (as voltmeter) to emitter of power transistor (Qe12 and Qe14).
3. Adjust PC trimmer potentiometer (VRe2) so that tester reading is 20mV.
4. Remove tester to emitter of power transistor (Qe11 and Qe13).
5. Adjust PC trimmer potentiometer (VRe1) so that tester reading is 20mV.

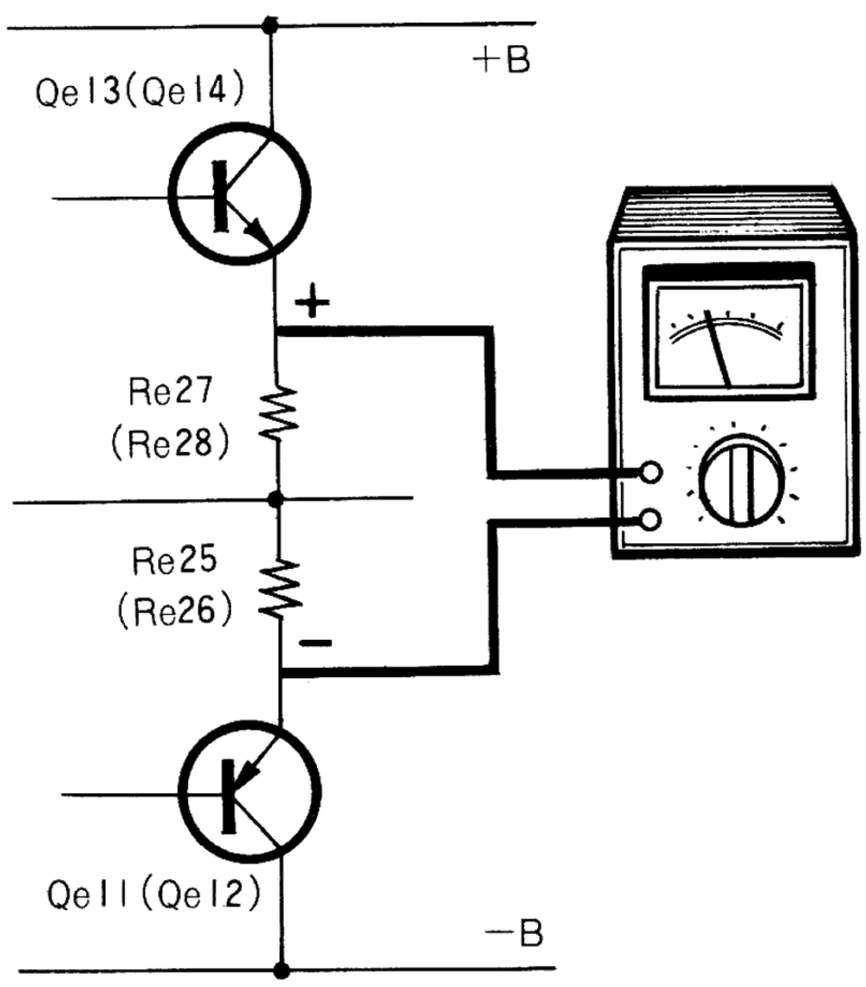

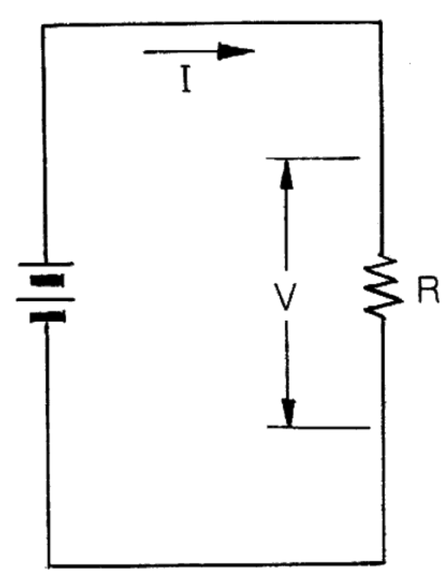

R=Re25+Re26≒1 ohm
V=I×R=20mV

www.hifiengine.com

REPLACEMENT OF POWER TRANSISTOR

1. Remove screws (not tapping screw).
2. Replace the power transistor with new.
   At this time, don't forget to spread silicone grease on faces of mica.
3. Fix the power transistor with screw on the heat sink.
4. Check the transistor is not in contact with heat sink.

NOTE: 1. Tapping screw holds the transistor socket. Don't remove it without necessity.
2. Before fixing the transistor, in the case of replacing transistor socket, fix the transistor socket.

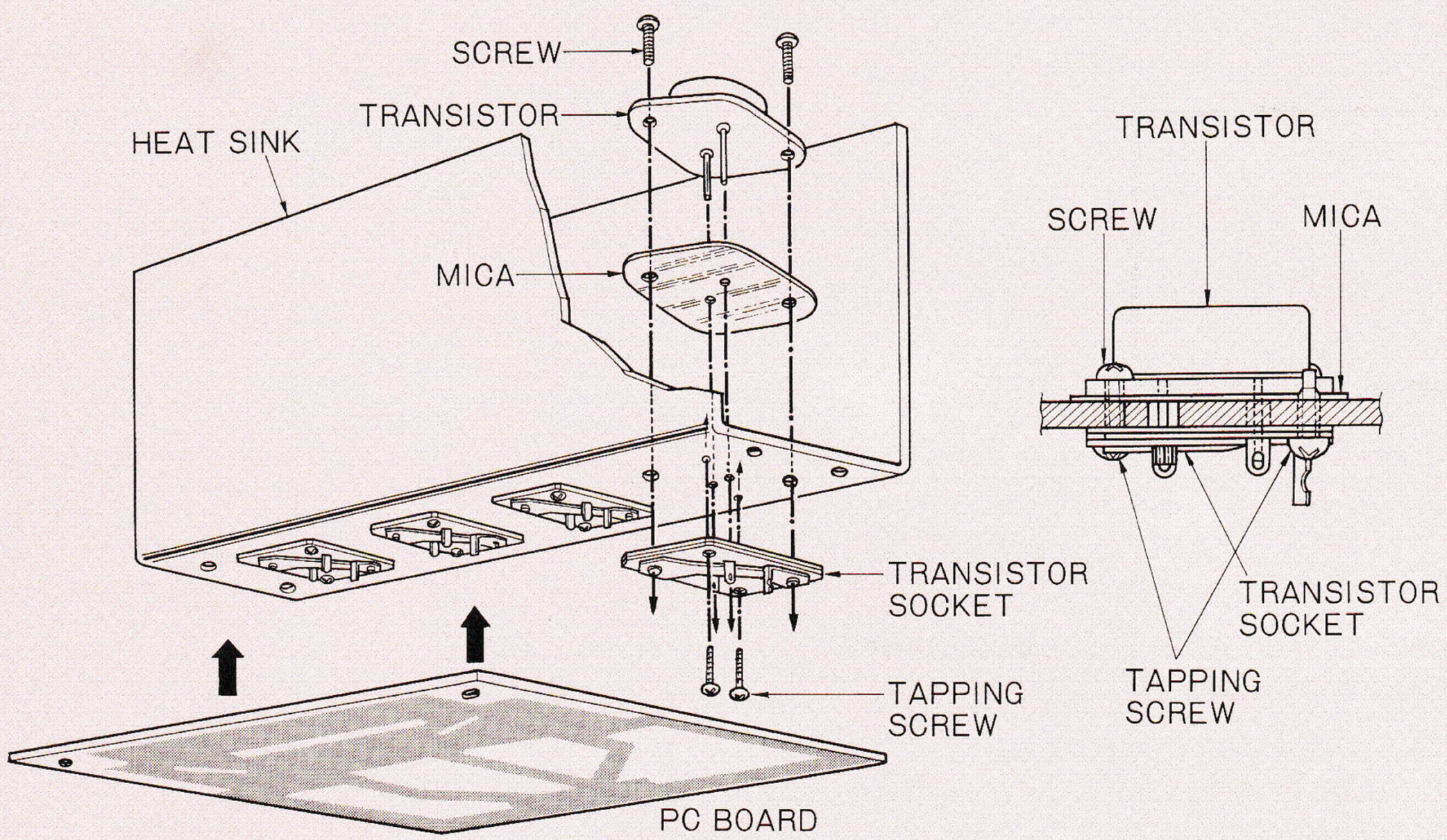

*Don't forget to spread silicone grease on the faces of mica.

www.hifiengine.com

DISASSEMBLY OF KR-4200

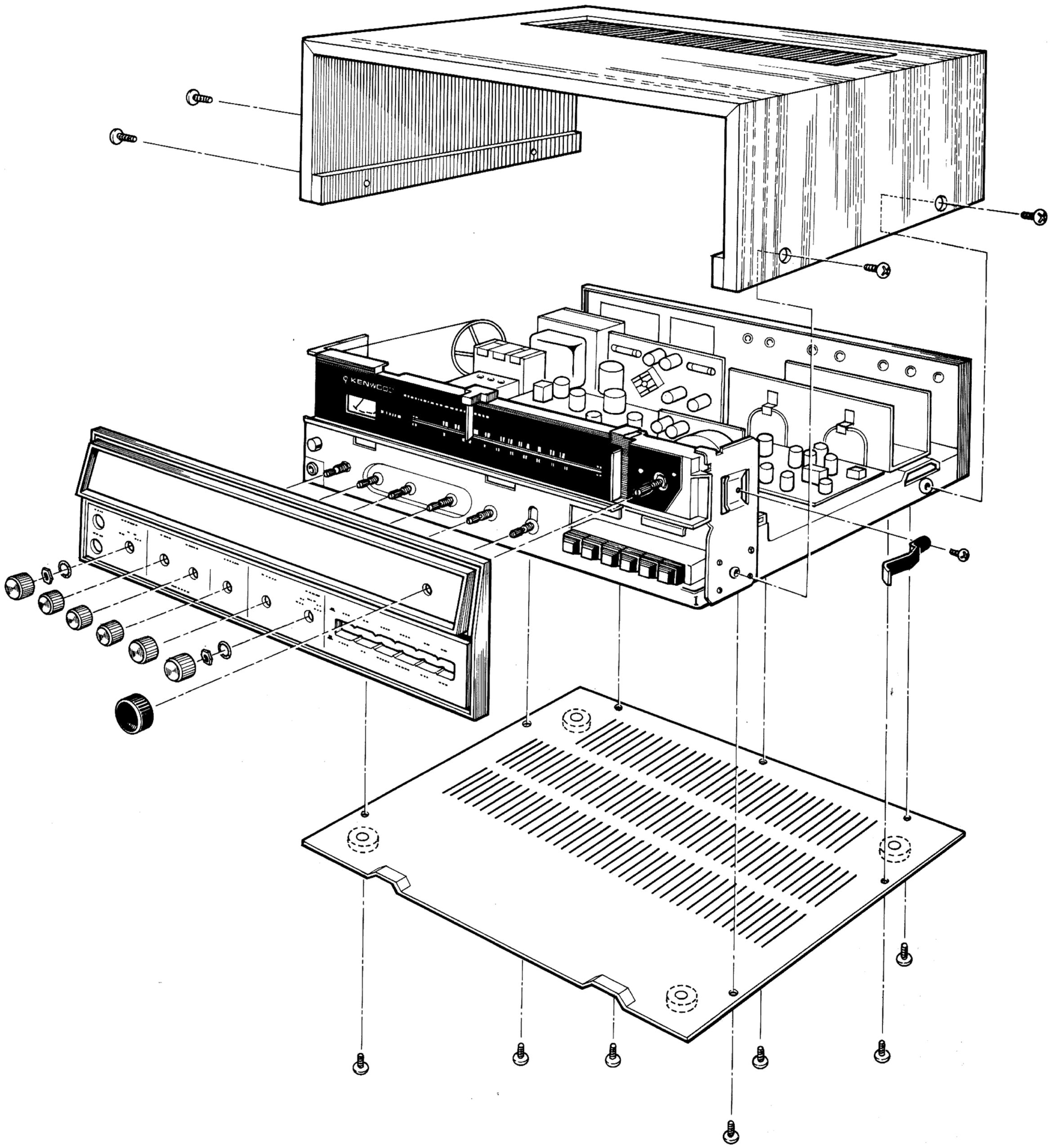

www.hifiengine.com

MOUNTING TEMPLATE

1. Remove the walnut cabinet.
2. Locate the supporting shelf at the height you wish the receiver positioned.
3. Remove the four bottom legs.
4. An air space must be made between the bottom of the set and the supporting shelf to assure good ventilation and cool operation. This space can be made by placing two boards which measure 9/16" thick by 1" to 2" width between chassis and the supporting shelf.
5. Make panel cutout in the size shown below 4-7/8" x 16-5/16". The bottom of the cutout should be flush with the bottom plate of the receiver, as shown in the side view. The distance between the bottom of the cutout and the top of the supporting shelf is 9/16".
6. The receiver is held in place by two bolts. The holes must be made in the shelf to correspond with the holes in the receiver. Use the "Top View" to locate these holes on the supporting shelf. The holes should be made 1/4" in diameter or somewhat larger.

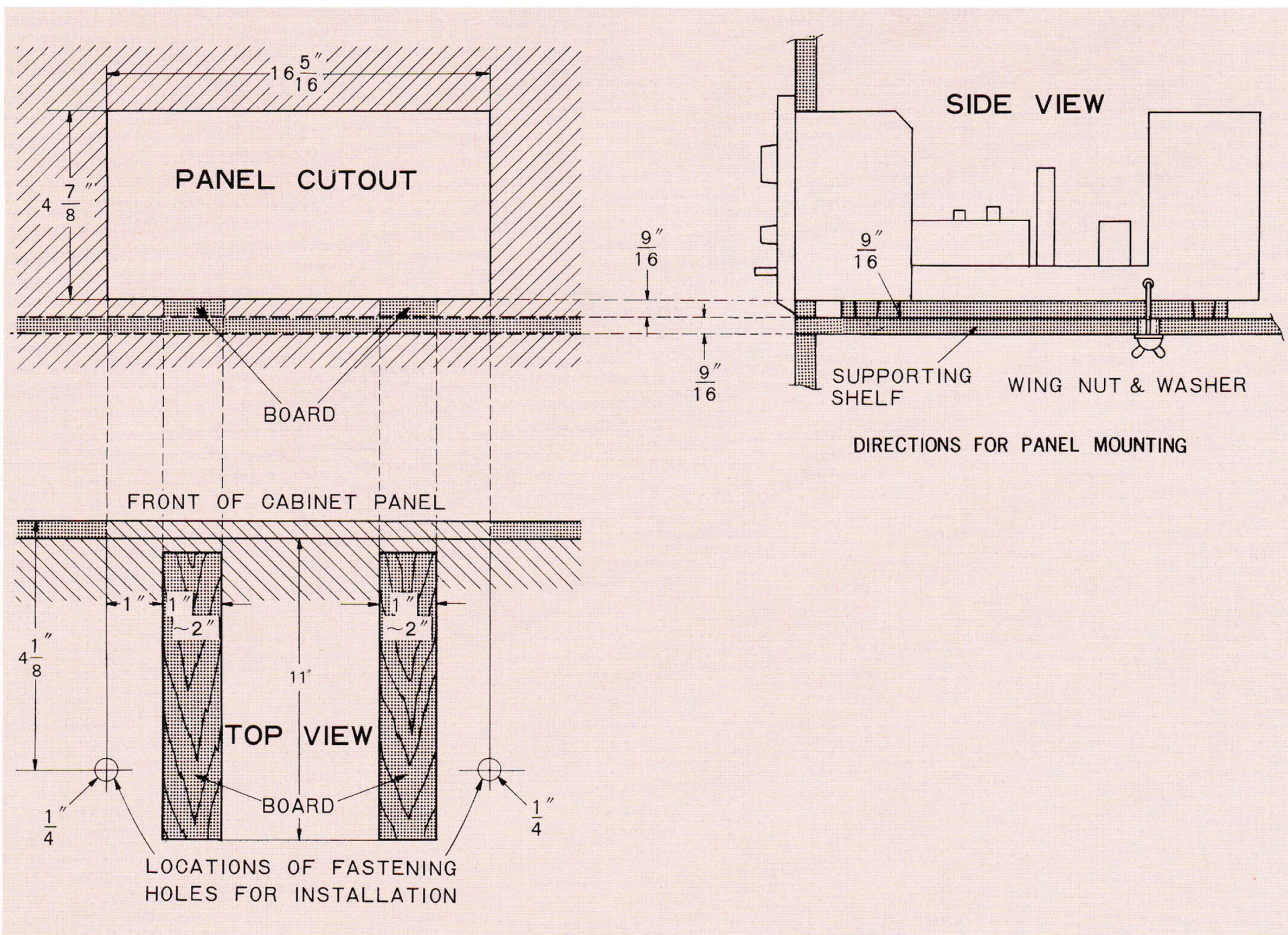

CORD STRINGING & TRANSISTOR LEADS

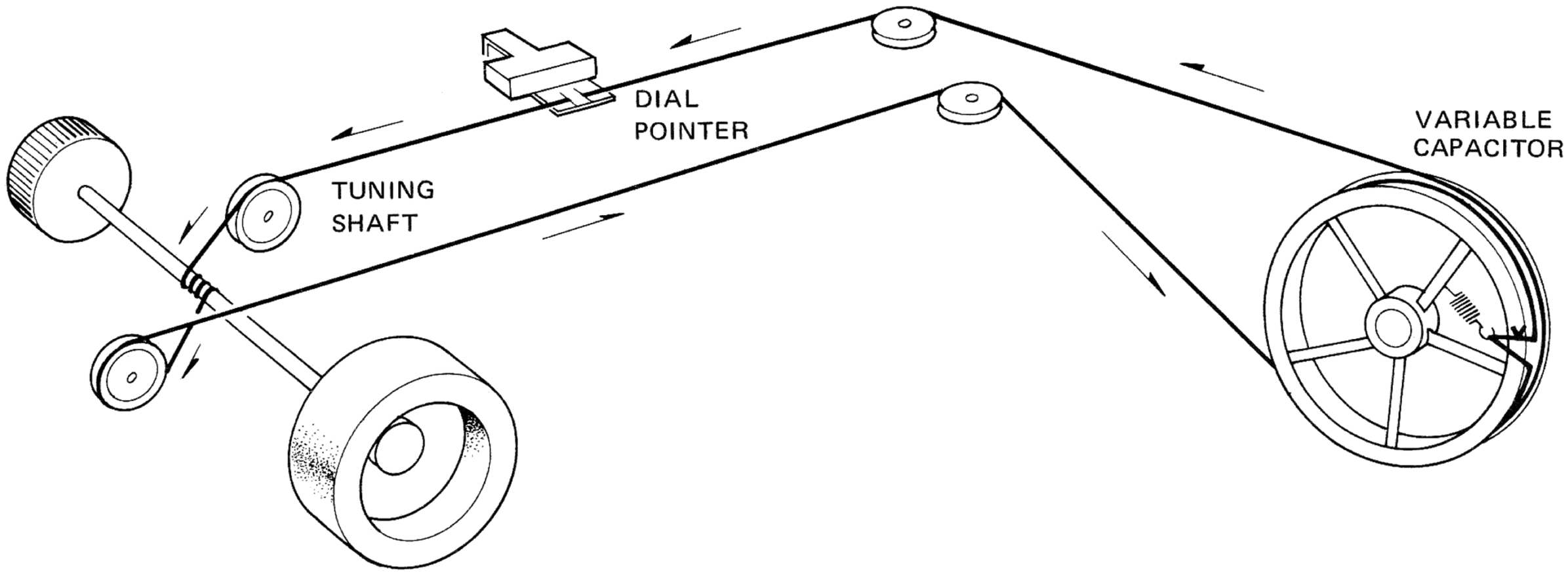

2SA620WL

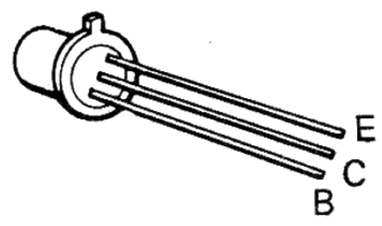

2SC458
2SC1345

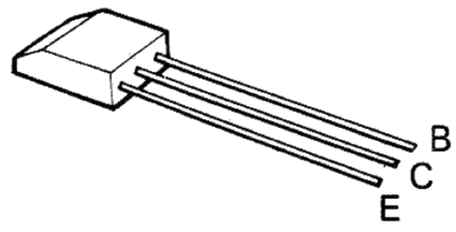

2SD220

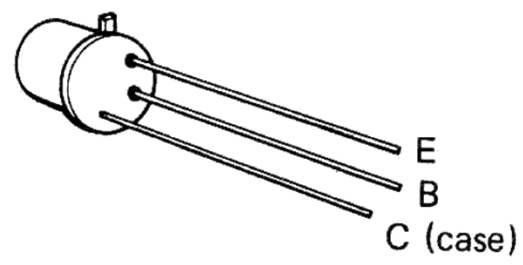

3SK30

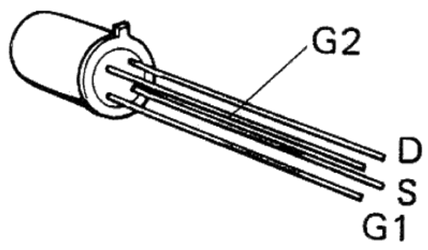

2SA621

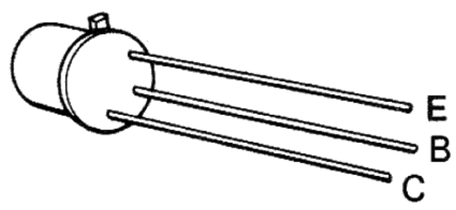

2SC1213A
2SA673

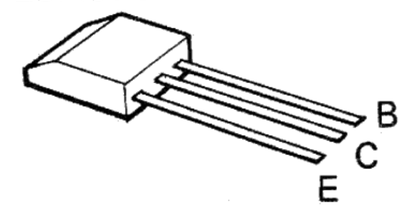

2SC1416

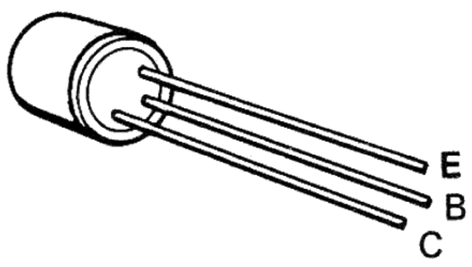

2SA733
2SC945

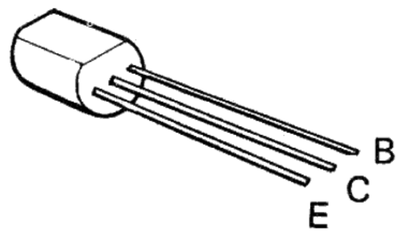

2SC758R 2SC381R
2SC941
2SC1000

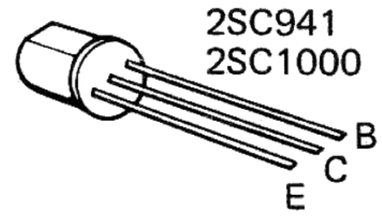

2SC1061

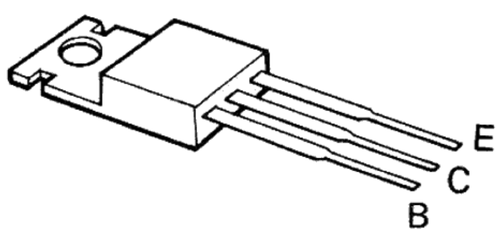

2SA743A
2SC1212A

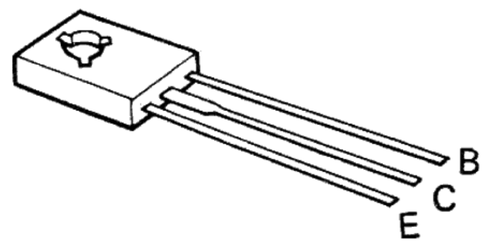

2SD335
2SA626

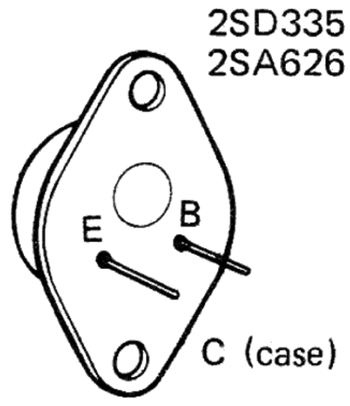

www.hifiengine.com

TABLE OF INTERCHANGEABLE TRANSISTORS

Tr. name	INTERCHANGEABLE Tr.
(X00-1200-10 or -01)	
2SD220	2SC497, 2SC484
2SC945 (Q)	2SC1213A (C), 2SC984 (C)
(X05-1080-10)	
μPC555A	μA703C, CS5995
3SK30 (B) or (C)	2SK-19
2SC785 (R)	—
2SC381 (R)	2SC535 (A) or (B), 2SC460, SE-3001, 2SC380
2SC941 (O)	2SC381 (O)
2SC945 (Q) or (R)	2SC1213A
2SC458 (D)	2SC1000 (GR), 2SC1345 (D)
2SA733A (Q) or (R)	2SA620WL (4) or (5)
2SC1213A (C)	2SC734 (Y), 2SC984 (C)
(X07-1030-03)	
2SA743A (B) or (C)	2SA497, 2SA484
2SA626	2SA649, 2SA627, 2SA746
2SA673A (B)	2SA743A (B)
2SA621-2-3 or 4	2SA743A (B) or (C)
2SC1345 (E)	2SC1000 (BL), 2SC1416 (BL), 2SC1416A (BL)
2SC1212A (B) or (C)	2SC484, 2SC497, 2SC708A
2SC1213A (B) or (C)	2SC984, 2SC734, 2SC1212A
2SD335 (2SD180)	2SC1111, 2SD287, 2SC1402
(X08-1080-13)	
2SA620WL4	2SA493 (GR)
2SC1416BL	2SC1000 (BL), 2SC1345 (E)
(X11-1100-10)	
2SC1000BL	2SC1416A (BL), 2SC1000 (E)

www.hifiengine.com

PARTS LIST

Ref. No.	Parts No.	Description				Remarks
		CAPACITOR				
C1	CE04W0F221	Electrolytic	220μF	3.15WV		
C3, 4	CE04W1C331	Electrolytic	330μF	16WV		
C300	C90-0145-05	Polyester	0.01μF	±20%		
C301, 302	C90-0146-05	Electrolytic	2200μF	35WV		
		RESISTOR				
R100	PD14BY2E103J	Carbon	10kΩ	±5%	1/4W	
R120	PD14BY2E394J	Carbon	390kΩ	±5%	1/4W	
R121	PD14BY2E104J	Carbon	100kΩ	±5%	1/4W	
R171	RC05GF2H331K	Carbon	330Ω	±10%	1/2W	
R220	PD14BY2E394J	Carbon	390kΩ	±5%	1/4W	
R221	PD14BY2E104J	Carbon	100kΩ	±5%	1/4W	
R271	RC05GF2H331K	Carbon	330Ω	±10%	1/2W	
R300	RC05GF2H225K	Carbon	2.2MΩ	±10%	1/2W	
R301	RC05GF2H270K	Carbon	27Ω	±10%	1/2W	
		SEMICONDUCTOR				
D1		V06B				
		SWITCH				
S1	S04-4019-05	Rotary (F4. 10. 5) SELECTOR				
S9	S04-1024-05	Rotary (F1. 4. 4.) SPEAKERS				
		MISCELLAENOUS				
—	A03-0095-12	Cabinet				
—	A10-0330-11	Chassis				
—	A15-0021-13	Pushbutton switch frame				
—	A20-0518-15	Panel				
—	A20-0566-03	Panel assembly				
—	A21-0107-02	Dress panel				
—	A30-0070-05	Dial board				
—	A40-0101-13	Bottom plate				
—	B07-0084-04	Black spacer				
—	B10-0100-12	Frontglass				
—	B20-0251-23	Dial calibrations				
—	B21-4010-15	Dial pointer (yellow)				
—	B30-0064-15	Pilot lamp (50mA BEACON)				
—	B30-0068-05	Pilot lamp (meter)				
—	B30-0069-05	Pilot lamp (300mA) x 4				
—	B31-0143-15	Meter assembly				
—	B42-0009-04	Passed sticker				
—	B52-0140-00	Circuit diagram				
—	D01-0009-05	Flywheel				
—	D15-0034-05	Pulley				
—	D15-0073-14	Middle size pulley x 2				
—	D15-0075-04	Small size pulley x 2				
—	D20-0092-05	Dial shaft				
—	E08-0221-05	AC outlet x 2 (UL)				
—	E11-0002-05	Phone jack (PHONES)				
—	E13-0401-05	Pin jack (4P with DIN)				
—	E13-0408-05	Pin jack (4P)				
—	E13-0601-05	Pin jack (6P)				
—	E20-0418-03	Terminal strips (4P)				

www.hifiengine.com

PARTS LIST

Ref. No.	Parts No.	Description	Remarks
—	E21-0802-05	Push terminal (8P)	
—	F07-0279-14	Dial cover	
—	F99-0009-14	Slider	
—	G01-0044-04	Dial spring	
—	H01-0846-04	Carton case	
—	J02-0049-14	Leg x 4	
—	J19-0266-14	Frontglass stopper	
—	J19-0268-04	Relay stopper	
—	J19-0286-14	Dial stopper	
—	J19-0288-24	Meter stopper	
—	J19-0290-24	Side board (L)	
—	J19-0291-14	Side board (R)	
—	J19-0301-33	Dial stopper	
—	J19-0304-04	Dial stopper (side) x 2	
—	J21-0806-14	Antenna mounting hardware	
—	J21-0192-04	Amp stopper	
—	J21-0977-14	Switch mounting hardware	
—	J21-1015-34	L shaped hardware	
—	J21-1016-14	Pilot lamp mounting hardware	
—	J21-1030-14	Panel stopper	
—	K23-0117-03	Knob (TUNING)	
—	K23-0119-03	Knob (SPEAKER, MODE, SELECTOR)	
—	K23-0120-03	Knob (BALANCE)	
—	K23-0122-03	Knob (TONE) x 2	
—	K29-0115-04	Knob (POWER)	
—	K29-0124-13	Knob (TAPE-A)	
—	K29-0125-13	Knob (TAPE-B)	
—	K29-0126-13	Knob (LOUDNESS)	
—	K29-0127-13	Knob (NOISE FIL)	
—	K29-0128-13	Knob (FM-MUTING)	
—	K29-0129-13	Knob (MODE)	
—	L03-0078-05	Power trans.	
—	R90-0097-05	Spark killer	
—	S51-2009-05	Relay (UL)	
—	T90-0002-05	FM antenna	
—	T90-0026-05	Ferrite antenna	
—	X05-1080-10	Tuner unit	
—	X07-1030-03	Main amp unit	
—	X08-1080-13	Preamp unit	
—	X11-1100-10	Tone amp unit	
—	X13-1270-10	Pushbutton switch unit	
In North America add to the following parts.			
—	A23-0332-12	Rear panel	
—	B40-0681-04	Model name plate	
—	B42-0359-04	Caution sticker x 2	

www.hifiengine.com

PARTS LIST

Ref. No.	Parts No.	Description	Remarks
–	B46-0002-00	Warranty card	
–	B50-0879-00	Instruction manual	
–	B58-0043-00	Carton case caution card	
–	E30-0046-05	Power cord (UL)	
–	F05-2021-05	Fuse (2A) (UL)	
–	H03-0168-04	Carton case	
–	J13-0016-15	Fuse holder (UL)	
–	S39-2002-05	Pushbutton switch (UL)	
–	X00-1200-10	Power supply unit	
In other area,			
–	A23-0333-12	Rear panel	
–	B40-0683-04	Model name plate	
–	B46-0022-00	Warranty card	
–	B46-0023-00	Warranty card	
–	B50-0880-00	Instruction manual	
–	B58-0139-00	Power supply caution card	
–	B58-0144-00	Power voltage caution card	
–	B58-0146-00	Spare fuse caution card	
–	B59-0018-00	KENWOOD service stations' list	
–	D32-0021-04	Switch stopper	
–	E30-0034-05	Power cord	
–	F05-1023-05	Fuse (1A)	
–	F05-2023-05	Fuse (2A)	
–	J13-0033-05	Fuse holder	
–	S31-2001-05	Slide switch (voltage selector)	
S8	S39-2003-05	Pushbutton switch (POWER)	
–	X00-1200-01	Power supply unit	

www.hifiengine.com

POWER SUPPLY (X00-1200-10) PARTS LIST

Ref. No.	Parts No.	Description				Remarks
		CAPACITOR				
Ck1	CE02W1J471	Electrolytic	470μF	63WV		
Ck2	CE04W1H010	Electrolytic	1μF	50WV		
Ck3	CE04W1H100	Electrolytic	10μF	50WV		
Ck4	CE04W1H3R3	Electrolytic	3.3μF	50WV		
Ck5	CE04W1J100	Electrolytic	10μF	63WV		
Ck6	CE04W1H330	Electrolytic	33μF	50WV		
Ck7	CP02B2J103M	Oil filled	0.01μF	±20%		
Ck8	CE04W1C331	Electrolytic	330μF	16WV		
Ck9	CE04W1C100	Electrolytic	10μF	16WV		
		RESISTOR				
Rk1	RC05GF2H5R6K	Carbon	5.6Ω	±10%	1/2W	
Rk2	RC05GF2H2R2K	Carbon	2.2Ω	±10%	1/2W	
Rk3	PD14BY2E392J	Carbon	3.9kΩ	±5%	1/4W	
Rk4	PD14BY2E472J	Carbon	4.7kΩ	±5%	1/4W	
Rk5	PD14BY2E392J	Carbon	3.9kΩ	±5%	1/4W	
Rk6	PD14BY2E822J	Carbon	8.2kΩ	±5%	1/4W	
Rk7	PD14BY2E682J	Carbon	6.8kΩ	±5%	1/4W	
Rk8	RW14AG3G271J	Wire wound	270Ω	±5%	4W	
Rk9	RN14AB3D221J	Metal film	220Ω	±5%	2W	
Rk10	PD14BY2E394J	Carbon	390kΩ	±5%	1/4W	
		SEMICONDUCTOR				
Qk1		2SD220				
Qk2, 3		2SC945 (Q)				
Dk1		S1RB-10				
Dk2, 3		V06B				
Dk4		1S388T				
Dk5		V06B				
		MISCELLANEOUS				
—	F02-0007-05	Heat sink				
—	F06-1023-05	Fuse (1A, lead type) (UL)				
—	F06-2022-05	Fuse (2A, lead type) (UL)				
—	J21-1003-04	PC board mounting hardware (L)				
—	J21-1004-04	PC board mounting hardware (R)				

www.hifiengine.com

TUNER (X05-1080-10) PARTS LIST

Ref. No.	Parts No.	Description				Remarks
		CAPACITOR				
Cg1	CC45SL1H150K	Ceramic	15pF	±10%		
Cg2	CC45SL1H101K	Ceramic	100pF	±10%		
Cg3	CK45F1H103Z	Ceramic	0.01μF	+80%	−20%	
Cg4	CC45SL1H030C	Ceramic	3pF	±0.25pF		
Cg5, 6	CK45F1H103Z	Ceramic	0.01μF	+80%	−20%	
Cg7	CC45SL1H180K	Ceramic	18pF	±10%		
Cg8	CC45SL1H270K	Ceramic	27pF	±10%		
Cg9	CC45SL1H100D	Ceramic	10pF	±0.5pF		
Cg10	CC45SL1H221K	Ceramic	220pF	±10%		
Cg11	CK45F1H103Z	Ceramic	0.01μF	+80%	−20%	
Cg12	CC45SL1H100D	Ceramic	10pF	±0.5pF		
Cg13	CC45TH1H020C	Ceramic	2pF	±0.25pF		
Cg14	CK45F1H223Z	Ceramic	0.022μF	+80%	−20%	
Cg15	CC45SG1H220K	Ceramic	22pF	±10%		
Cg16	CC45SG1H470K	Ceramic	47pF	±10%		
Cg17	CC45SG1H220K	Ceramic	22pF	±10%		
Cg18	CC45SG1H150K	Ceramic	15pF	±10%		
Cg19~26	CK45F1H223Z	Ceramic	0.022μF	+80%	−20%	
Cg27, 28	CM93D1H102J(Z)	Mica	1000pF	±5%		
Cg32	CC45SL1H050D	Ceramic	5pF	±0.5pF		
Cg33	CQ93M1H223K	Mylar	0.022μF	±10%		
Cg34	CM93D1H102J(Z)	Mica	1000pF	±5%		
Cg35	CK45F1H223Z	Ceramic	0.022μF	+80%	−20%	
Cg36	CK45F1H103Z	Ceramic	0.01μF	+80%	−20%	
Cg37	CQ93M1H102K	Mylar	0.001μF	±10%		
Cg38	CK45F1H223Z	Ceramic	0.022μF	+80%	−20%	
Cg39	CQ93M1H472J	Mylar	0.0047μF	±5%		
Cg40	CC45SL1H050D	Ceramic	5pF	±0.5pF		
Cg41	CK45B1H471K	Ceramic	470pF	±10%		
Cg42~44	CK45F1H223Z	Ceramic	0.022μF	+80%	−20%	
Cg45, 46	CC45SL1H221K	Ceramic	220pF	±10%		
Cg47	CE04W1E100	Electrolytic	10μF	25WV		
Cg49	CE04W1C101	Electrolytic	100μF	16WV		
Cg50	CC45SL1H101K	Ceramic	100pF	±10%		
Cg52, 53	CQ93M1H103K	Mylar	0.01μF	±10%		
Cg54	CE04W1H3R3	Electrolytic	3.3μF	50WV		
Cg56	CK45F1H223Z	Ceramic	0.022μF	+80%	−20%	
Cg58	CE04W1E100	Electrolytic	10μF	25WV		
Cg59~62	CK45F1H223Z	Ceramic	0.022μF	+80%	−20%	
Cg63	CE04W1E100	Electrolytic	10μF	25WV		
Cg64	CQ93M1H472J	Mylar	0.0047μF	±5%		
Cg65, 66	CQ93M1H103K	Mylar	0.01μF	±10%		
Cg67	CK45B1H361K	Ceramic	360pF	±10%		
Cg68	CC45SL1H180K	Ceramic	18pF	±10%		
Cg69	CE04W1E100	Electrolytic	10μF	25WV		
Cg70	CM93D1H391J(Z)	Mica	390pF	±5%		
Cg71	CE04W1H010	Electrolytic	1μF	50WV		
Cg72	CQ93M1H223K	Mylar	0.022μF	±10%		
Cg73	CQ08S2B472J	Polystyrene	0.0047μF	±5%		
Cg75	CQ93M1H822J	Mylar	0.0082μF	±5%		
Cg76	CE04W1H010	Electrolytic	1μF	50WV		
Cg77	CQ08S2B472J	Polystyrene	0.0047μF	±5%		
Cg78	CE04W1E100	Electrolytic	10μF	25WV		
Cg79	CE04W0J470	Electrolytic	47μF	6.3WV		
Cg80	CE04W1E4R7	Electrolytic	4.7μF	25WV		
Cg81, 82	CQ93M1H682J	Mylar	0.0068μF	±5%		

www.hifiengine.com

TUNER (X05-1080-10) PARTS LIST

Ref. No.	Parts No.	Description				Remarks
Cg83	CE04W1E4R7	Electrolytic	4.7μF	25WV		
Cg85	CQ93M1H223K	Mylar	0.022μF	±10%		
Cg86, 87	CQ08S2B102J	Polystyrene	0.001μF	±5%		
VC	C01-0171-05	Variable capacitor				
CTg1	C05-0009-15	Ceramic trimmer (6pF)				
		RESISTOR				
Rg1	PD14BY2B104J	Carbon	100kΩ	±5%	1/8W	
Rg2	PD14BY2B330J	Carbon	33Ω	±5%	1/8W	
Rg3	PD14BY2B471J	Carbon	470Ω	±5%	1/8W	
Rg4	PD14BY2B104J	Carbon	100kΩ	±5%	1/8W	
Rg5	PD14BY2B562J	Carbon	5.6kΩ	±5%	1/8W	
Rg6	PD14BY2B472J	Carbon	4.7kΩ	±5%	1/8W	
Rg7	PD14BY2B223J	Carbon	22kΩ	±5%	1/8W	
Rg8	PD14BY2B102J	Carbon	1kΩ	±5%	1/8W	
Rg9	PD14BY2B562J	Carbon	5.6kΩ	±5%	1/8W	
Rg10	PD14BY2B392J	Carbon	3.9kΩ	±5%	1/8W	
Rg11	PD14BY2B223J	Carbon	22kΩ	±5%	1/8W	
Rg12	PD14BY2B391J	Carbon	390Ω	±5%	1/8W	
Rg13	PD14BY2B331J	Carbon	330Ω	±5%	1/8W	
Rg14	PD14BY2B102J	Carbon	1kΩ	±5%	1/8W	
Rg15	PD14BY2B391J	Carbon	390Ω	±5%	1/8W	
Rg16	PD14BY2B393J	Carbon	39kΩ	±5%	1/8W	
Rg17	PD14BY2B103J	Carbon	10kΩ	±5%	1/8W	
Rg18	PD14BY2B223J	Carbon	22kΩ	±5%	1/8W	
Rg19	PD14BY2B332J	Carbon	3.3kΩ	±5%	1/8W	
Rg20	PD14BY2B221J	Carbon	220Ω	±5%	1/8W	
Rg21, 22	PD14BY2B102J	Carbon	1kΩ	±5%	1/8W	
Rg23	PD14BY2B222J	Carbon	2.2kΩ	±5%	1/8W	
Rg24	PD14BY2B223J	Carbon	22kΩ	±5%	1/8W	
Rg25	PD14BY2B562J	Carbon	5.6kΩ	±5%	1/8W	
Rg26	PD14BY2B183J	Carbon	18kΩ	±5%	1/8W	
Rg29	PD14BY2B470J	Carbon	47Ω	±5%	1/8W	
Rg30, 31	PD14BY2B561J	Carbon	560Ω	±5%	1/8W	
Rg32	PD14BY2B332J	Carbon	3.3kΩ	±5%	1/8W	
Rg33	PD14BY2B223J	Carbon	22kΩ	±5%	1/8W	
Rg34	PD14BY2B221J	Carbon	220Ω	±5%	1/8W	
Rg35	PD14BY2B562J	Carbon	5.6kΩ	±5%	1/8W	
Rg36	PD14BY2B561J	Carbon	560Ω	±5%	1/8W	
Rg37	PD14BY2B562J	Carbon	5.6kΩ	±5%	1/8W	
Rg38	PD14BY2B103J	Carbon	10kΩ	±5%	1/8W	
Rg39	PD14BY2B221J	Carbon	220Ω	±5%	1/8W	
Rg40	PD14BY2B682J	Carbon	6.8kΩ	±5%	1/8W	
Rg41, 42	PD14BY2B333J	Carbon	33kΩ	±5%	1/8W	
Rg43, 44	PD14BY2B222J	Carbon	2.2kΩ	±5%	1/8W	
Rg45, 46	PD14BY2B682J	Carbon	6.8kΩ	±5%	1/8W	
Rg48	PD14BY2B102J	Carbon	1kΩ	±5%	1/8W	
Rg49, 50	PD14BY2B221J	Carbon	220Ω	±5%	1/8W	
Rg51	PD14BY2B562J	Carbon	5.6kΩ	±5%	1/8W	
Rg52	PD14BY2B223J	Carbon	22kΩ	±5%	1/8W	
Rg53	PD14BY2B104J	Carbon	100kΩ	±5%	1/8W	
Rg54	PD14BY2B103J	Carbon	10kΩ	±5%	1/8W	
Rg55	PD14BY2B563J	Carbon	56kΩ	±5%	1/8W	
Rg56	PD14BY2B562J	Carbon	5.6kΩ	±5%	1/8W	
Rg57	PD14BY2B222J	Carbon	2.2kΩ	±5%	1/8W	
Rg58	PD14BY2B682J	Carbon	6.8kΩ	±5%	1/8W	
Rg59	PD14BY2B102J	Carbon	1kΩ	±5%	1/8W	

www.hifiengine.com

TUNER (X05-1080-10) PARTS LIST

Ref. No.	Parts No.	Description				Remarks
Rg60	PD14BY2B103J	Carbon	10kΩ	±5%	1/8W	
Rg61	PD14BY2B221J	Carbon	220Ω	±5%	1/8W	
Rg62	PD14BY2B473J	Carbon	47kΩ	±5%	1/8W	
Rg63	PD14BY2B103J	Carbon	10kΩ	±5%	1/8W	
Rg64	PD14BY2B221J	Carbon	220Ω	±5%	1/8W	
Rg65	PD14BY2B102J	Carbon	1kΩ	±5%	1/8W	
Rg66	PD14BY2B563J	Carbon	56kΩ	±5%	1/8W	
Rg67	PD14BY2B124J	Carbon	120kΩ	±5%	1/8W	
Rg68	PD14BY2B471J	Carbon	470Ω	±5%	1/8W	
Rg69	PD14BY2B330J	Carbon	33Ω	±5%	1/8W	
Rg70	PD14BY2B101J	Carbon	100Ω	±5%	1/8W	
Rg71	PD14BY2B102J	Carbon	1kΩ	±5%	1/8W	
Rg72	PD14BY2B101J	Carbon	100Ω	±5%	1/8W	
Rg74	PD14BY2B471J	Carbon	470Ω	±5%	1/8W	
Rg75	PD14BY2B472J	Carbon	4.7kΩ	±5%	1/8W	
Rg76	PD14BY2B330J	Carbon	33Ω	±5%	1/8W	
Rg77~84	PD14BY2B103J	Carbon	10kΩ	±5%	1/8W	
Rg85~87	PD14BY2B823J	Carbon	82kΩ	±5%	1/8W	
Rg89	PD14BY2B823J	Carbon	82kΩ	±5%	1/8W	
Rg90, 91	PD14BY2B153J	Carbon	15kΩ	±5%	1/8W	
Rg92, 93	PD14BY2B123J	Carbon	12kΩ	±5%	1/8W	
SEMICONDUCTOR						
Qg1		3SK30 (B) or (C)				
Qg2~6		2SC381 (R)				
Qg7		2SC945 (Q) or (R)				
Qg8		2SC785 (R)				
Qg9		2SC941 (O)				
Qg10		2SA733 (Q) or (R)				
Qg11, 12		2SC458 (D)				
Qg13		2SC1213A (C)				
Qg14		2SC941 (O)				
ICg1		μPC555A (R) or (B)				
Dg1		1N60				
Dg3, 4		1S1555 or 1S2076				
Dg5~12		1N60				
Dg13		1S1555 or 1S2076				
Dg14~18		1N60				
Dg19		1S1555 or 1S2076				
Dg20~27		1N60				
Dg29, 30		MV-13				
Zg1		DZ-140				
TRANS/COIL/FILTER						
Tg1	L34-0410-05	FM-ANT coil				
Tg2	L34-0408-05	FM-RF coil				
Tg3	L34-0409-05	FM-OSC coil				
Tg4	L30-0176-05	FM-IFT				
Tg5	L30-0247-05	FM-IFT				
Tg6	L30-0250-05	AM-IFT				
Tg7	L30-0052-05	AM-IFT				
Tg8	L30-0248-05	FM-IFT				
Tg9	L30-0207-15	Discriminator coil				
Tg10	L30-0249-05	AM-IFT				
Tg11	L30-0082-05	AM-OSC coil				
Tg12	L35-0054-05	MPX coil				
Tg13	L35-0052-05	MPX coil				

www.hifiengine.com

TUNER (X05-1080-10) PARTS LIST

Ref. No.	Parts No.	Description	Remarks
Tg14	L35-0054-05	MPX coil	
Tg15	L35-0053-05	MPX coil	
Lg1	L33-0086-05	Ferri-inductor	
Lg2	L33-0027-04	Choke coil	
Lg3, 4	L33-0026-04	Choke coil	
Lg5	L33-0098-05	Ferri-inductor	
Lg6~9	L33-0086-05	Ferri-inductor	
Lg10, 11	L33-0146-05	Ferri-inductor	
CFg1, 2	L72-0014-05	Ceramic filter	
POTENTIOMETER			
VRg1	R12-2016-05	PC trimmer (AM-METER) 5kΩ (B)	
VRg3	R12-3029-05	PC trimmer (FM-OUTPUT) 30kΩ (B)	
VRg4	R12-0047-05	PC trimmer (SEPARATION) 500Ω (B)	
VRg5	R12-4019-05	PC trimmer (BEACON) 50kΩ (B)	
MISCELLANEOUS			
–	F10-0279-14	Shield plate	
–	F10-0280-03	Shield plate	

www.hifiengine.com

MAIN AMP (X07-1030-03) PARTS LIST

Ref. No.	Parts No.	Description				Remarks
		CAPACITOR				
Ce1, 2	CC94SL1H221K	Ceramic	220pF	±10%		
Ce3, 4	CE04W1H010	Electrolytic	1μF	50W		
Ce5, 6	CE04W0F470	Electrolytic	47μF	3.15WV		
Ce9, 10	CC94SL1H470K	Ceramic	47pF	±10%		
Ce11, 12	CE04W0F101	Electrolytic	100μF	3.15WV		
Ce13, 14	CE04W1V470	Electrolytic	47μF	35WV		
Ce15, 16	CQ93M1H224M	Mylar	0.22μF	±20%		
Ce17~20	CE04W0F101	Electrolytic	100μF	3.15WV		
Ce21	CE04W1H330	Electrolytic	33μF	50WV		
Ce22, 23	CP02B2J223M	Oil filled	0.022μF	±20%		
Ce24	CE04W1V221	Electrolytic	220μF	35WV		
Ce25, 26	CK45F1H203Z	Ceramic	0.02μF	+80%	−20%	
		RESISTOR				
Re1, 2	PD14BY2E183J	Carbon	18kΩ	±5%	1/4W	
Re3, 4	PD14BY2E562J	Carbon	5.6kΩ	±5%	1/4W	
Re5, 6	PD14BY2E563J	Carbon	56kΩ	±5%	1/4W	
Re7, 8	PD14BY2E122J	Carbon	1.2kΩ	±5%	1/4W	
Re9, 10	PD14BY2E183J	Carbon	18kΩ	±5%	1/4W	
Re11, 12	PD14BY2E561J	Carbon	560Ω	±5%	1/4W	
Re13, 14	PD14BY2E563J	Carbon	56kΩ	±5%	1/4W	
Re15, 16	PD14BY2E222J	Carbon	2.2kΩ	±5%	1/4W	
Re17, 18	PD14BY2E472J	Carbon	4.7kΩ	±5%	1/4W	
Re19, 20	PD14CY2E101J	Carbon	100Ω	±5%	1/4W	
Re21~24	RC05GF2H331K	Carbon	330Ω	±10%	1/2W	
Re25~28	RN14AB3DR47J	Metal film	0.47Ω	±5%	2W	
Re29~32	RC05GF2H100K	Carbon	10Ω	±10%	1/2W	
Re35, 36	PD14BY2E472J	Carbon	4.7kΩ	±5%	1/4W	
Re37, 38	PD14BY2E102J	Carbon	1kΩ	±5%	1/4W	
Re39, 40	PD14BY2E152J	Carbon	1.5kΩ	±5%	1/4W	
Re41, 42	PD14CY2E681J	Carbon	680Ω	±5%	1/4W	
Re43	PD14CY2E103J	Carbon	10kΩ	±5%	1/4W	
Re44	PD14BY2E103J	Carbon	10kΩ	±5%	1/4W	
Re46	PD14BY2E103J	Carbon	10kΩ	±5%	1/4W	
Re47	PD14CY2E332J	Carbon	3.3kΩ	±5%	1/4W	
Re49	PD14CY2E333J	Carbon	33kΩ	±5%	1/4W	
Re50	PD14BY2E104J	Carbon	100kΩ	±5%	1/4W	
Re51, 52	RC05GF2H392K	Carbon	3.9kΩ	±10%	1/2W	
Re53	PD14CY2E183J	Carbon	18kΩ	±5%	1/4W	
Re54	PD14BY2E183J	Carbon	18kΩ	±5%	1/4W	
Re55	PD14BY2E101J	Carbon	100Ω	±5%	1/4W	
Re56	RC05GF2H681K	Carbon	680Ω	±10%	1/2W	
Re57	PD14BY2E560J	Carbon	560Ω	±5%	1/4W	
Re58	RC05GF2H152K	Carbon	1.5kΩ	±10%	1/2W	
Re59	PD14CY2E222J	Carbon	2.2kΩ	±5%	1/4W	
		SEMICONDUCTOR				
Qe1~4		2SC1345 (E)				
Qe5, 6		2SA621-2-3 or 4				
Qe7, 8		2SA743A (B) or (C)				
Qe9, 10		2SC1212A (B) or (C)				
Qe11, 12		2SA626				
Qe13, 14		2SD335				
Qe15~17		2SC1213A (B)				
Qe18		2SA673A (B)				
Qe19, 20		2SC1213A (B) or (C)				

www.hifiengine.com

MAIN AMP (X07-1030-03) PARTS LIST

Ref. No.	Parts No.	Description	Remarks
De1, 2		1S1555	
De3, 4		STV-3	
De5~10		1S1555	
De11		RV-1	
De12~15		S-1.5-02	
De16		1S338T	
THe1, 2		5T-31L	
POTENTIOMETER			
VRe1, 2	R12-0026-05	PC trimmer (BIAS) 500Ω (B)	
MISCELLANEOUS			
–	E02-0209-05	Transistor socket x 4	
–	F01-0135-03	Heat sink	

www.hifiengine.com

PREAMP (X08-1080-13) PARTS LIST

Ref. No.	Parts No.	Description				Remarks
		CAPACITOR				
Cd1, 2	CS04E1E010M	Tantalum	1μF	25WV		
Cd3, 4	CK45D1H561M	Ceramic	560pF	±20%		
Cd5, 6	CC45SL1H680K	Ceramic	68pF	±10%		
Cd7, 8	CQ93M1H472J	Mylar	0.0047μF	±5%		
Cd9, 10	CQ93M1H153J	Mylar	0.015μF	±5%		
Cd13~16	CE04W1E100	Electrolytic	10μF	25WV		
Cd17, 18	CC45SL1H330K	Ceramic	33pF	±10%		
Cd19, 20	CE04W0F101	Electrolytic	100μF	3.15WV		
Cd21, 22	CE04W1E100	Electrolytic	10μF	25WV		
Cd23	CE04W1H100	Electrolytic	10μF	50WV		
Cd24	CE04W1H101	Electrolytic	100μF	50WV		
Cd27, 28	CC45SL1H220K	Ceramic	22pF	±10%		
		RESISTOR				
Rd1, 2	PD14BY2E222J	Carbon	2.2kΩ	±5%	1/4W	
Rd3, 4	PD14BY2E823J	Carbon	82kΩ	±5%	1/4W	
Rd5, 6	RN92A2H334J	Metal film	330kΩ	±5%	1/2W	
Rd7, 8	RN92A2H224J	Metal film	220kΩ	±5%	1/2W	
Rd9, 10	PD14BY2E473J	Carbon	47kΩ	±5%	1/4W	
Rd11, 12	PD14BY2E113J	Carbon	11kΩ	±5%	1/4W	
Rd13, 14	RN92A2E163G	Metal film	16kΩ	±2%	1/4W	
Rd15, 16	PD14BY2E204J	Carbon	200kΩ	±5%	1/4W	
Rd19, 20	PD14BY2E331J	Carbon	330Ω	±5%	1/4W	
Rd21~24	PD14BY2E333J	Carbon	33kΩ	±5%	1/4W	
Rd25, 26	PD14BY2E562J	Carbon	5.6kΩ	±5%	1/4W	
Rd27, 28	PD14BY2E221J	Carbon	220Ω	±5%	1/4W	
Rd29, 30	PD14BY2E333J	Carbon	33kΩ	±5%	1/4W	
Rd31	PD14BY2E104J	Carbon	100kΩ	±5%	1/4W	
Rd32	PD14BY2E471J	Carbon	470Ω	±5%	1/4W	
		SEMICONDUCTOR				
Qd1, 2		2SA620WL4				
Qd3, 4		2SC1416BL				

www.hifiengine.com

TONE AMP (X11-1100-10) PARTS LIST

Ref. No.	Parts No.	Description				Remarks
		CAPACITOR				
Ci1, 2	CS04E1E010XorM	Tantalum	1μF	25WV		
Ci3, 4	CC45SL1H101K	Ceramic	100pF	±10%		
Ci5, 6	CE04W1E100	Electrolytic	10μF	25WV		
Ci7, 8	CE04W0J101	Electrolytic	100μF	6.3WV		
Ci9, 10	CQ93M1H103K	Mylar	0.01μF	±10%		
Ci11, 12	CQ93M1H104K	Mylar	0.1μF	±10%		
Ci13, 14	CQ93M1H222K	Mylar	0.0022μF	±10%		
Ci15, 16	CQ93M1H273K	Mylar	0.027μF	±10%		
Ci17	CE04W1H101	Electrolytic	100μF	50WV		
		RESISTOR				
Ri1~4	PD14BY2E103J	Carbon	10kΩ	±5%	1/4W	
Ri5, 6	PD14BY2E564J	Carbon	560kΩ	±5%	1/4W	
Ri7, 8	PD14BY2E124J	Carbon	120kΩ	±5%	1/4W	
Ri9, 10	PD14BY2E562J	Carbon	5.6kΩ	±5%	1/4W	
Ri11, 12	PD14BY2E102J	Carbon	1kΩ	±5%	1/4W	
Ri13, 14	PD14BY2E271J	Carbon	270Ω	±5%	1/4W	
Ri15, 16	PD14BY2E562J	Carbon	5.6kΩ	±5%	1/4W	
Ri17, 18	PD14BY2E152J	Carbon	1.5kΩ	±5%	1/4W	
Ri19, 20	PD14BY2E103J	Carbon	10kΩ	±5%	1/4W	
Ri21, 22	PD14BY2E681J	Carbon	680Ω	±5%	1/4W	
Ri23	PD14BY2E561J	Carbon	560Ω	±5%	1/4W	
		SEMICONDUCTOR				
Qi1, 2		2SC1000BL				
		POTENTIOMETER				
VRi1	R08-4059-05	Potentiometer	50kΩ (B) dual	VOLUME		
VRi2	R03-5020-05	Potentiometer	100kΩ (W) slide	BALANCE		
VRi3	R08-4051-05	Potentiometer	50kΩ (A) dual	BASS		
VRi4	R08-4051-05	Potentiometer	50kΩ (A) dual	TREBLE		

www.hifiengine.com

PUSHBUTTON (X13-1270-10) PARTS LIST

Ref. No.	Parts No.	Description				Remarks
		CAPACITOR				
Ch1~4	CK45D1H561M	Ceramic	560pF	±20%		
Ch5	CK45D1H681M	Ceramic	680pF	±20%		
Ch6	CQ93M1H393K	Mylar	0.039μF	±10%		
Ch7	CK45D1H681M	Ceramic	680pF	±20%		
Ch8	CQ93M1H393K	Mylar	0.039μF	±10%		
Ch9, 10	CQ93M1H472K	Mylar	0.0047μF	±10%		
		RESISTOR				
Rh1~4	PD14BY2E222J	Carbon	2.2kΩ	±5%	1/4W	
Rh5, 6	PD14BY2E472J	Carbon	4.7kΩ	±5%	1/4W	
		SWITCH				
S2~7	S40-6008-05	Pushbutton switch (6 keys)				

www.hifiengine.com

PC BOARD

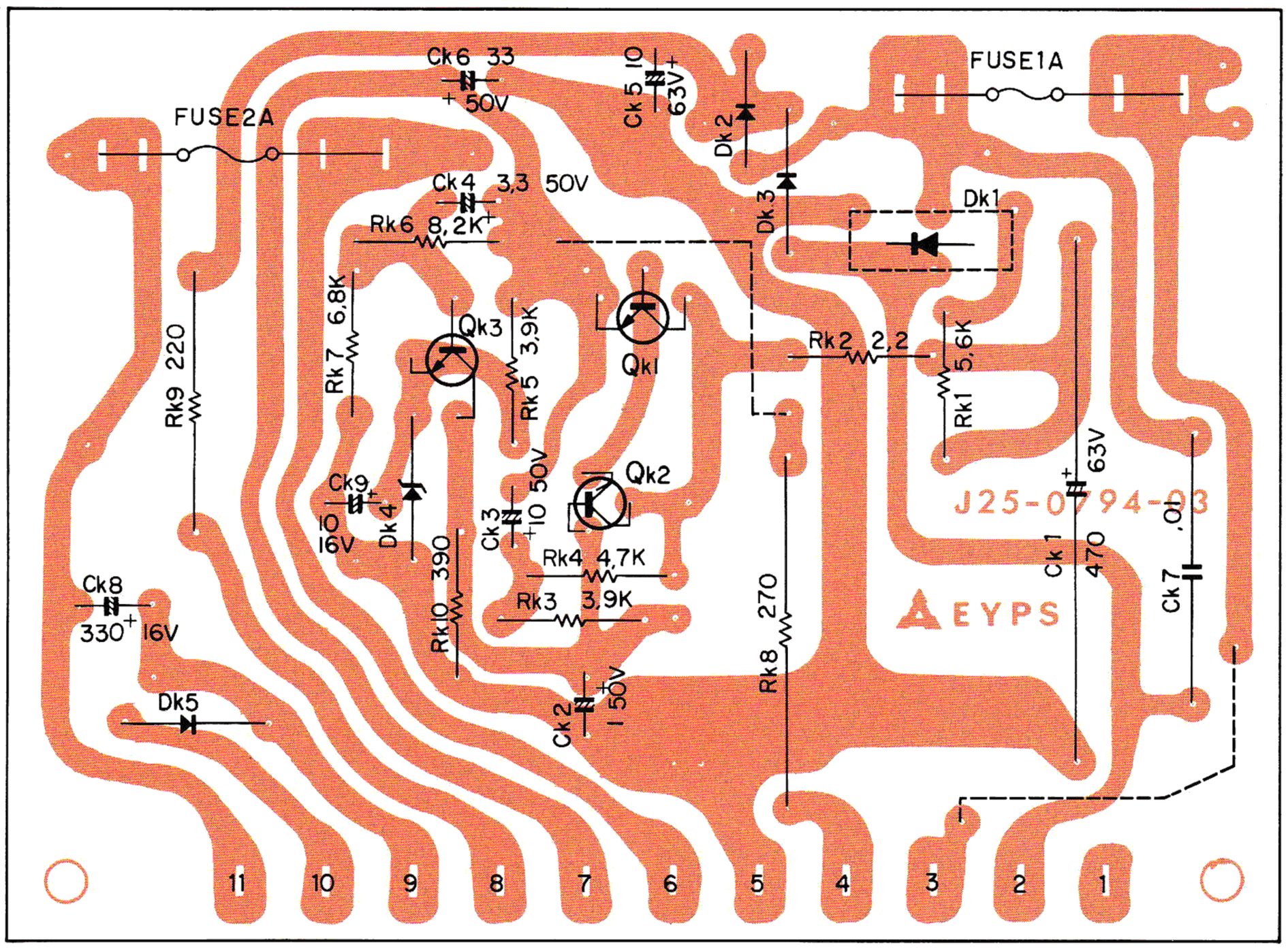

Qk1 : 2SD220, Qk2, 3 : 2SC945 (Q), Dk1 : S1RB-10,
Dk2, 3 : V06B, Dk4 : 1S388T, Dk5 : V06B

▲POWER SUPPLY UNIT (X00-1200-10 or 01)

▼PUSH BUTTON SW UNIT (X13-1270-10)

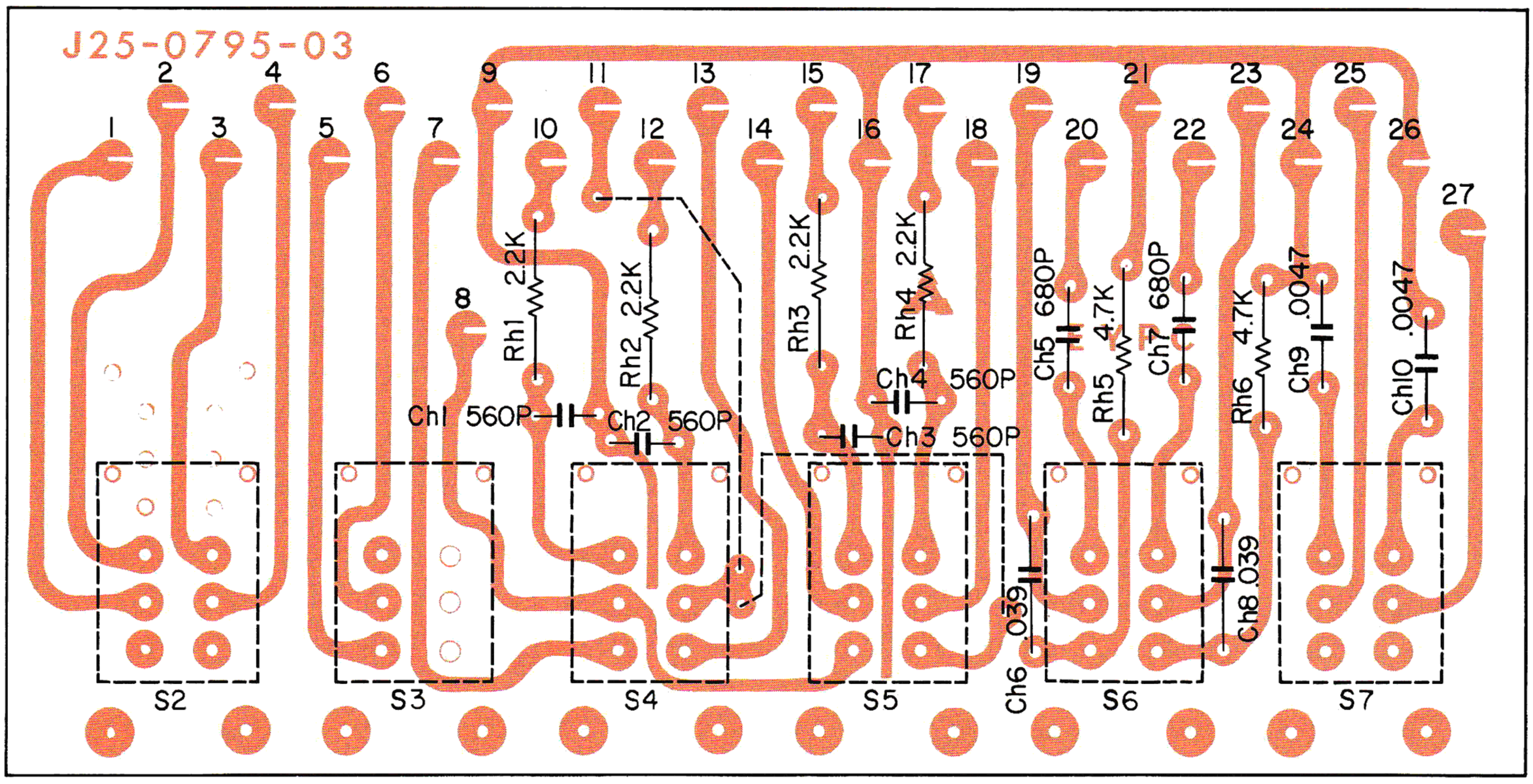

PC BOARD

TUNER UNIT ▶
(X05-1080-10)

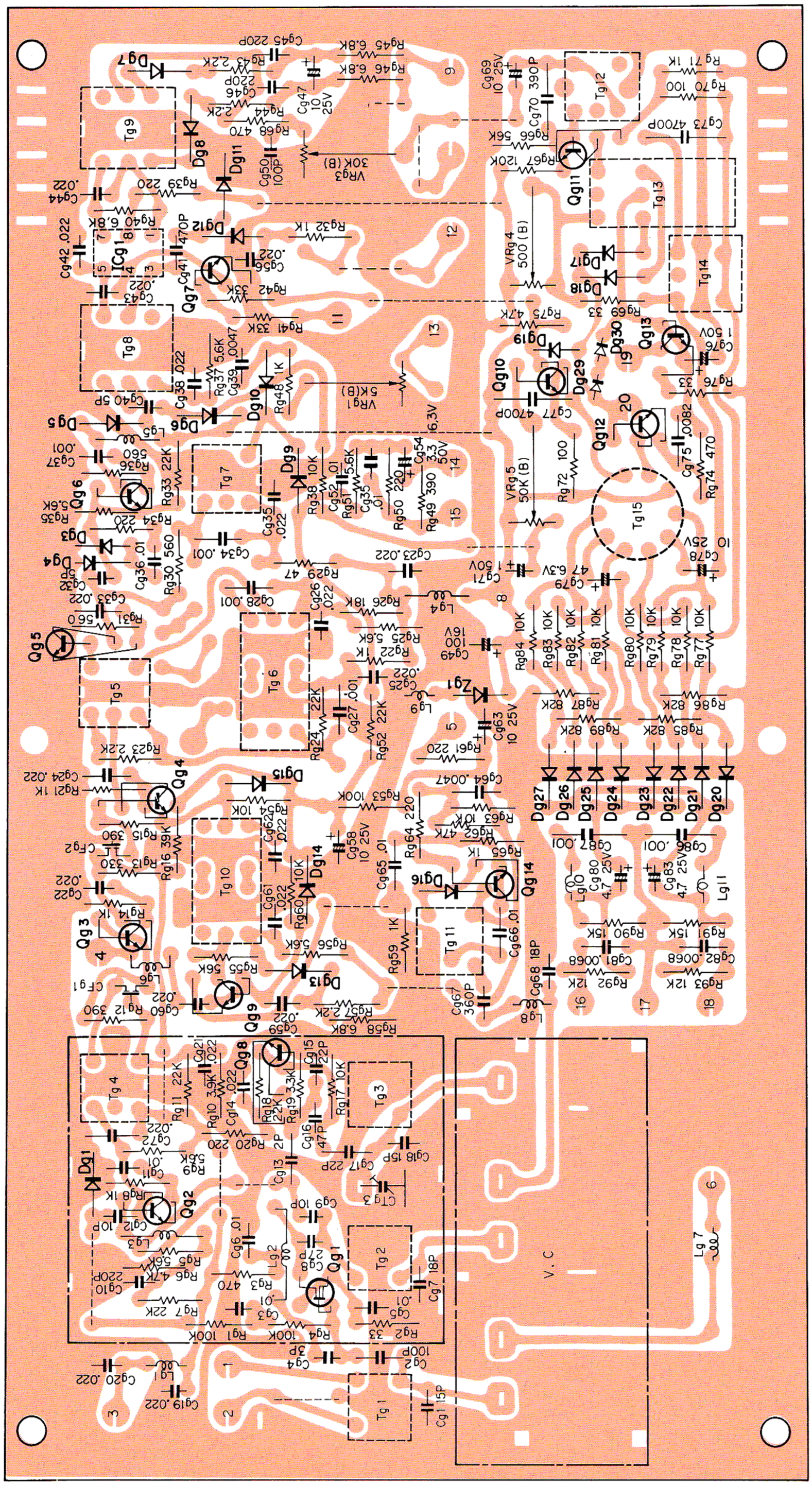

Qg1 : 3SK30 (B) or (C), Qg2~6 : 2SC381 (R), Qg7 : 2SC945 (Q) or (R),
Qg8 : 2SC785 (R), Qg9 : 2SC941 (O), Qg10 : 2SA733 (Q) or (R),
Qg11, 12 : 2SC458 (D), Qg13 : 2SC1213A (C), Qg14 : 2SC941 (O),
ICg1 : μPC555A, Dg1 : 1N60, Dg3, 4 : 1S1555 or 1S2076, Dg5~12 :
1N60, Dg13 : 1S1555 or 1S2076, Dg14~18 : 1N60, Dg19 : 1S1555 or
1S2076, Dg20 ~ 27 : 1N60, Dg29, 30 : MV-13, Zg1 : DZ-140

www.hifiengine.com

PC BOARD

▼MAIN AMP UNIT (X07-1030-03)

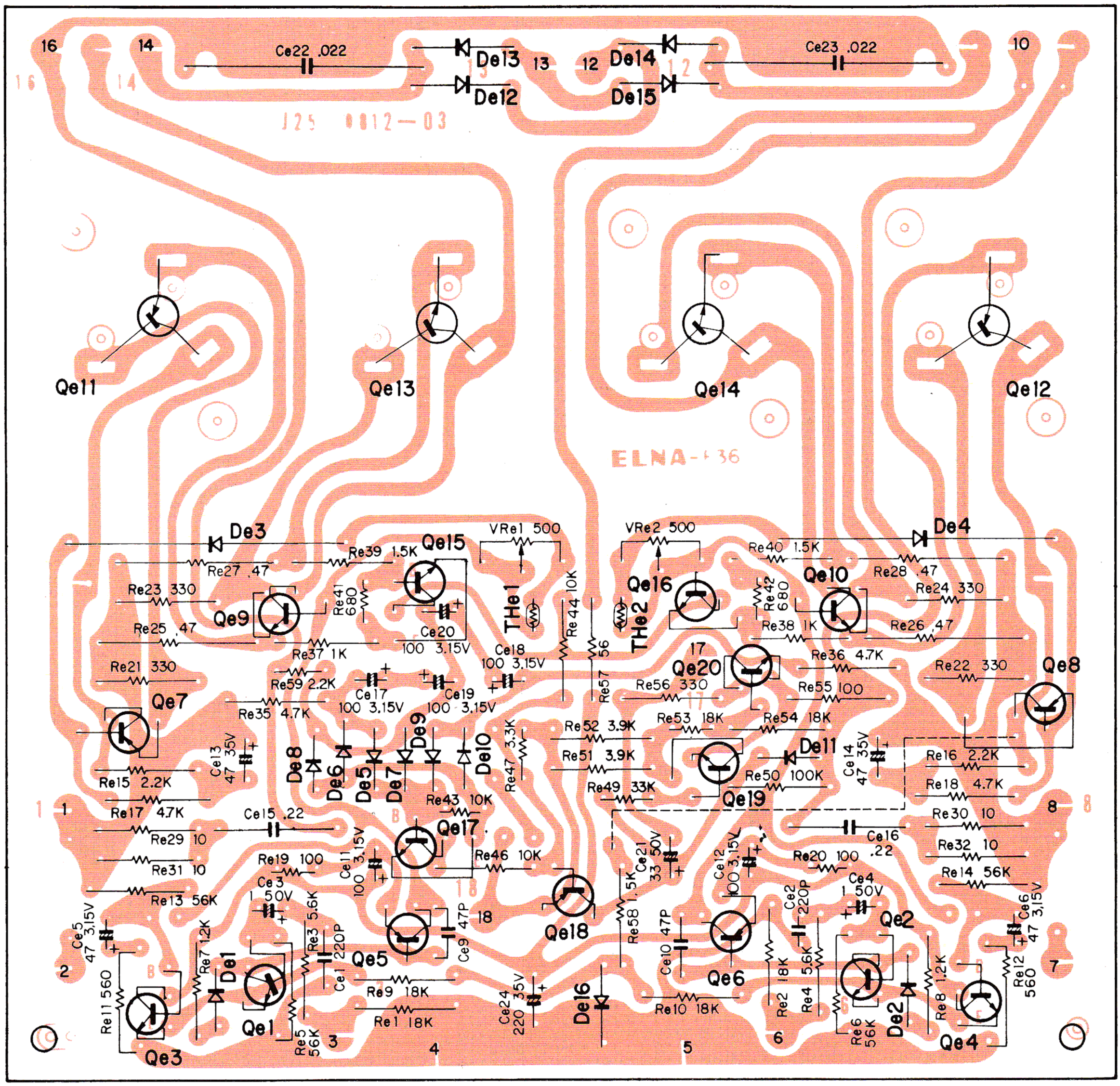

Qe1~4 : 2SC1345 (E),
Qe5, 6 : 2SA621-2-3 or 4,
Qe7, 8 : 2SA743A (B) or (C)
Qe9, 10 : 2SC1212A (B) or (C),
Qe11, 12 : 2SA626,
Qe13, 14 : 2SD335
Qe15~17 : 2SC1213A (B),
Qe18 : 2SA673A (B),
Qe19, 20 : 2SC1213A (B) or (C)
De1, 2 : 1S1555,
De3, 4 : STV-3,
De5~10 : 1S1555,
De11 : RV-1,
De12~15 : S-1.5-0.2,
De16 : 1S338T,
THe1, 2 : 5T-31L

www.hifiengine.com

PC BOARD

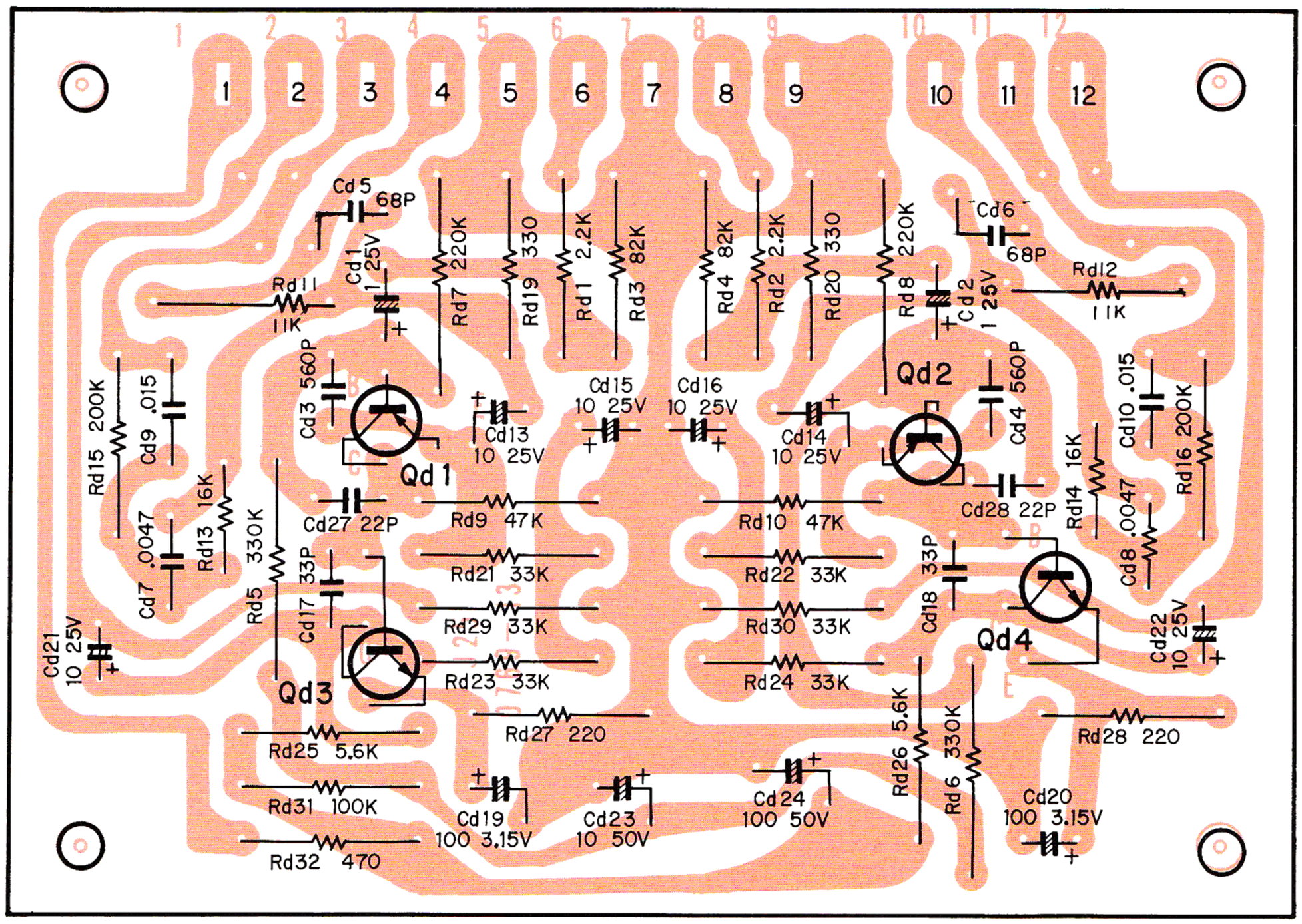

Qd1, 2 : 2SA620WL4, Qd3, 4 : 2SC1416BL

▲PREAMP UNIT (X08-1080-13)

▼TONE AMP UNIT (X11-1100-10)

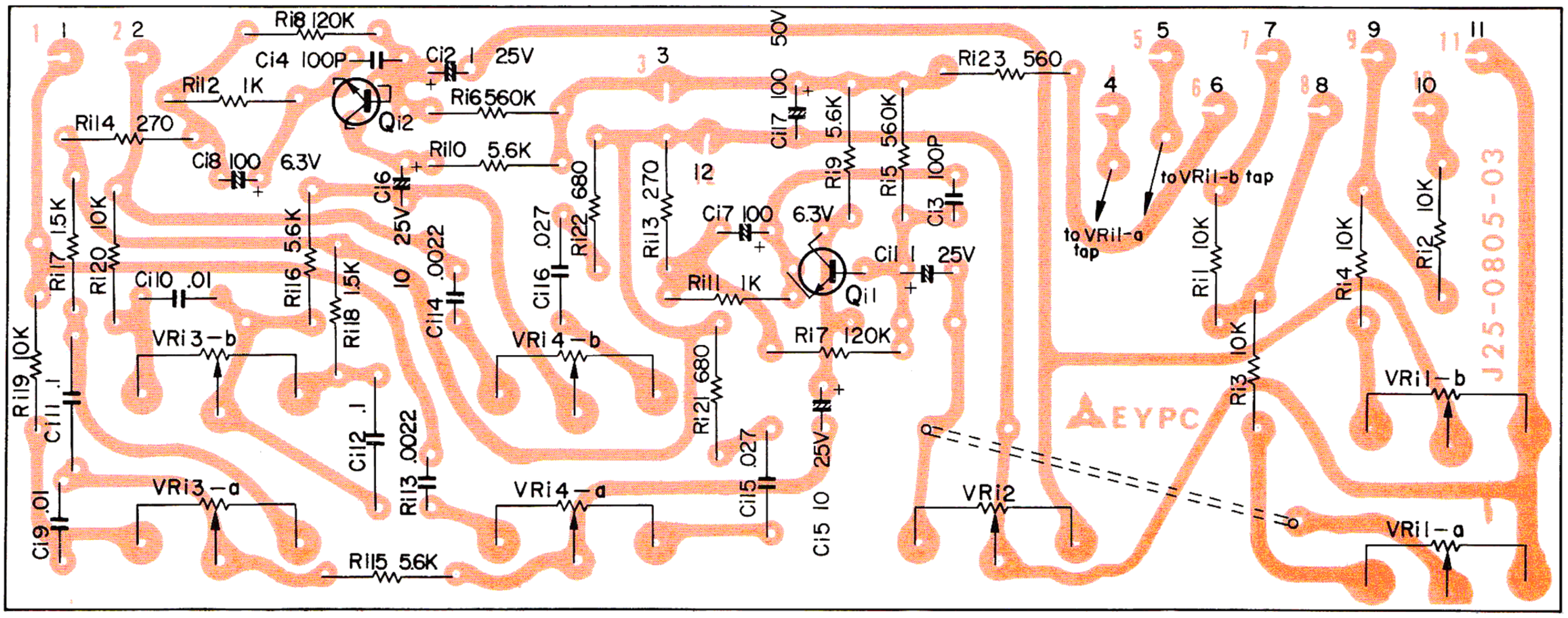

Qi1, 2 : 2SC1000BL

BLOCK DIAGRAM

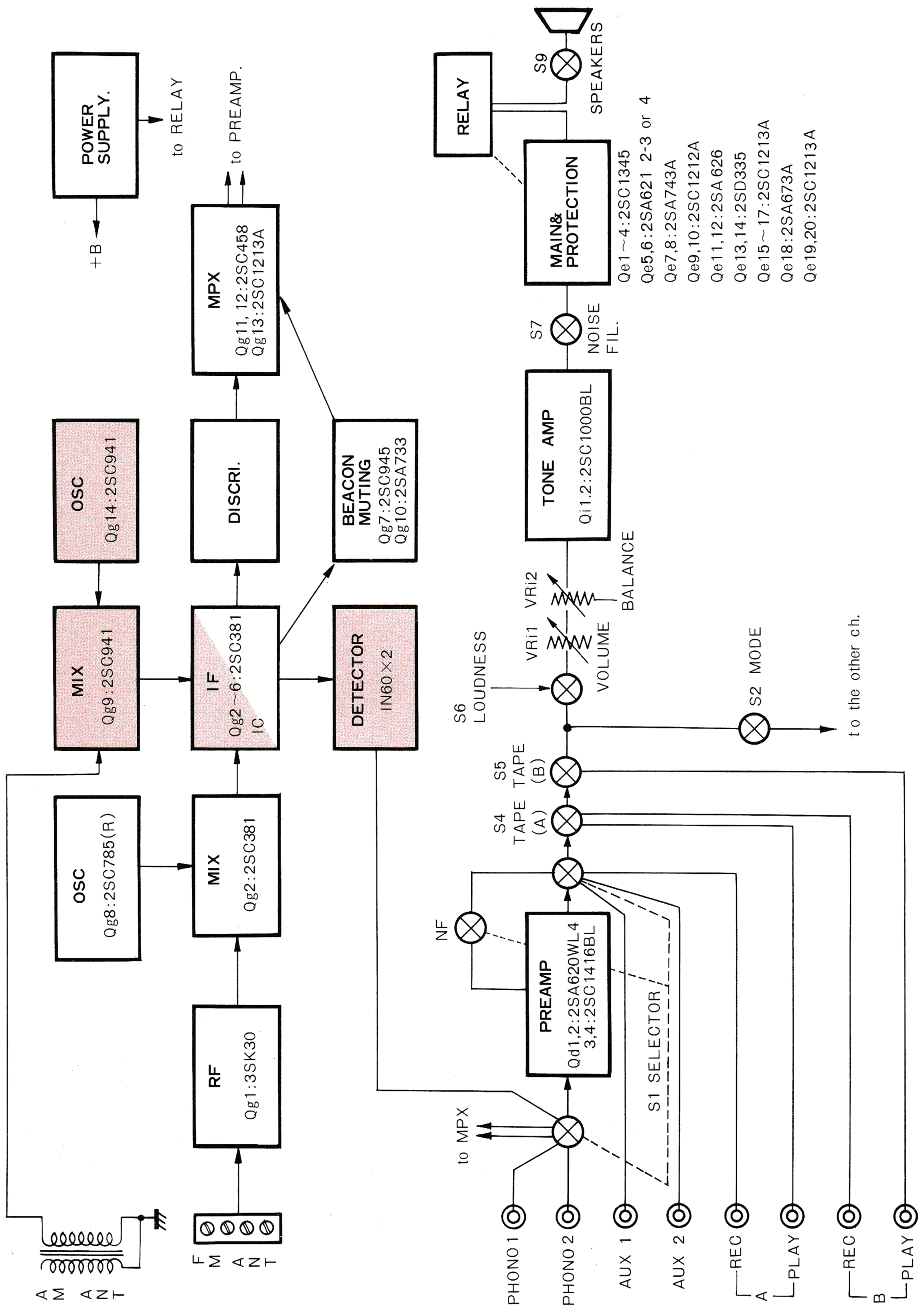

CIRCUIT DIAGRAM

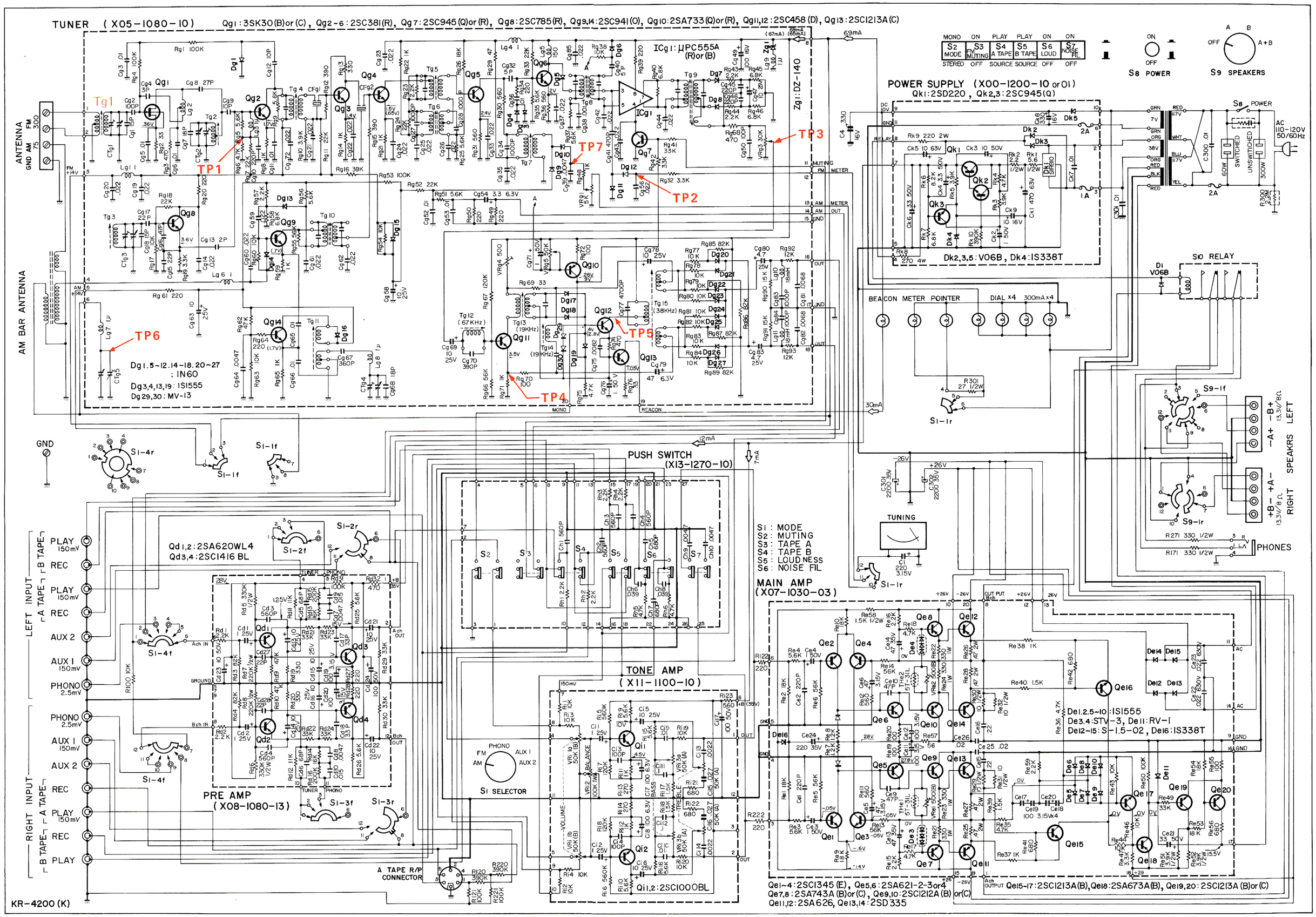

COLOR CODE

RESISTOR

COLOR (meaning)	1st (value)	2nd (value)	3rd (multiplier)	4th (tolerance)
Black	0	0	10^0	–
Brown	1	1	10^1	± 1%
Red	2	2	10^2	± 2%
Orange	3	3	10^3	–
Yellow	4	4	10^4	–
Green	5	5	10^5	–
Blue	6	6	10^6	–
Purple	7	7	10^7	–
Grey	8	8	10^8	–
White	9	9	10^9	–
Gold	–	–	10^{-1}	± 5%
Silver	–	–	10^{-2}	±10%
Non-color	–	–	–	±20%

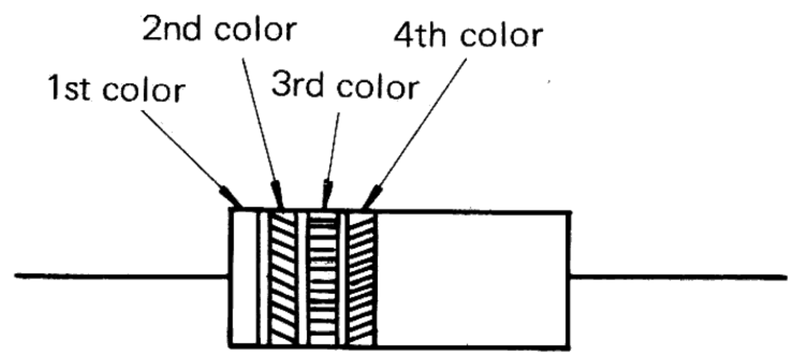

CAPACITOR (MICA)

COLOR (meaning)	1st (grade)	2nd (value)	3rd (value)	4th (multiplier)	5th (tolerance)	6th (characteristic)
Black	X	0	0	10^0	±20%	–
Brown	–	1	1	10^1	± 1%	B
Red	Z	2	2	10^2	± 2%	C
Orange	–	3	3	10^3	–	D
Yellow	–	4	4	10^4	–	E
Green	–	5	5	–	*± 5%	–
Blue	–	6	6	–	–	–
Purple	–	7	7	–	–	–
Grey	Y	8	8	–	–	–
White	–	9	9	0.1	±10%	–

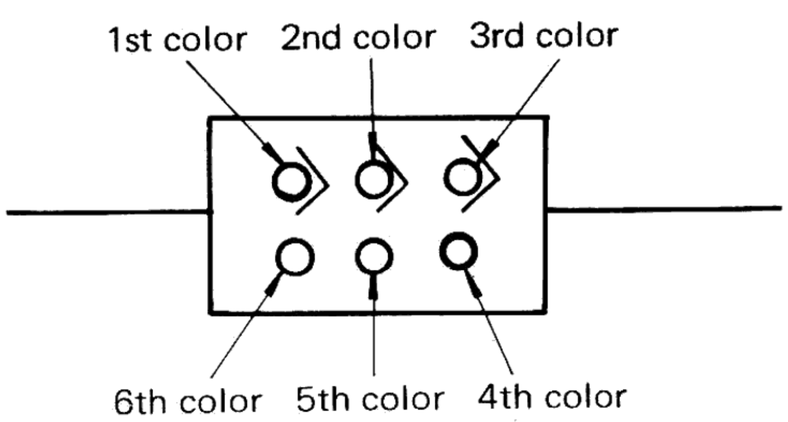

Unit = pF

* Capacitance being less than 10pF is ±0.5pF on tolerance.

www.hifiengine.com

SPECIFICATIONS

FM TUNER SECTION

Antenna Impedance	300 ohms balanced and 75 ohms unbalanced
Usable Sensitivity, IHF	2.0 μV
Quieting Slope	45 dB at 5 μV 60 dB at 10 μV 63 dB at 50 μV
Frequency Response	+0.5 dB, −2.0 dB, 20 Hz to 15,000 Hz
Harmonic Distortion	Mono Less than 0.5%
(at 400 Hz, 100% Mod)	Stereo Less than 0.8%
Signal-to-Noise Ratio	Better than 63 dB
Capture Ratio, IHF	3.0 dB
Selectivity, IHF (Alt. channel)	Better than 50 dB
Image Rejection	Better than 60 dB
IF Rejection	Better than 90 dB
Spurious Signal Rejection	Better than 90 dB
AM Suppression	Better than 60 dB
Stereo Separation	Better than 40 dB at 1,000 Hz. Better than 20 dB at 10,000 Hz
Sub Carrier Suppression	Better than 45 dB

AM TUNER SECTION

Antenna	Built-in ferrite antenna. External antenna terminals.
Usable Sensitivity, IHF	25 μV
Signal-to-Noise Ratio	Better than 45 dB at 1 mV input
Selectivity, IHF	Better than 30 dB
Image Rejection	Better than 45 dB
IF Rejection	Better than 35 dB

AMPLIFIER SECTION

Power Output	38 watts RMS continuous power stereo. 19 watts per channel. Both channels operating simultaneously into 8 ohms load at any frequency from 50 Hz to 20,000 Hz.		
	32/32 watts. Each channel operating into 4 ohms at 1,000 Hz.		
	26/26 watts. Each channel operating into 8 ohms at 1,000 Hz.		
	26/26 watts. Both channel operating into 4 ohms at 1,000 Hz.		
	20/20 watts. Both channel operating into 8 ohms at 1,000 Hz.		
	82 watts IHF total Dynamic power into 4 ohms.		
	62 watts IHF total Dynamic power into 8 ohms.		
Harmonic Distortion	Less than 0.7% at rated output from 50 Hz to 20,000 Hz.		
	Less than 0.2% at −3 dB rated output.		
Intermodulation Distortion	Less than 0.7% at rated output.		
	Less than 0.2% at −3 dB rated output.		
Frequency Response, High Level Input	±2dB, 22 Hz to 35,000 Hz.		
Power Bandwidth, IHF	25 Hz to 25,000 Hz.		
Input Sensitivity,	PHONO	3 mV,	(50 K ohms.)
(Input Impedance)	AUX 1 & 2	180 mV,	(30 K ohms.)
	TAPE PLAY A & B	200 mV,	(45 K ohms.)
Recording Output	TAPE REC A & B	150 mV	
(Below rated input)	DIN	30 mV	
Signal-to-Noise Ratio	PHONO	63 dB	
	AUX 1 & 2	75 dB	
	TAPE PLAY A & B	75 dB	
Damping Factor	50 at 8 ohms load		
Speaker Impedance	Accepts 4 to 16 ohms.		
Bass Control	±10 dB at 100 Hz.		
Treble Control	±10 dB at 10,000 Hz.		
Noise Filter	−10 dB at 10,000 Hz.		
Loudness Control (−30 dB)	+10 dB at 100 Hz, +5 dB at 10,000 Hz.		

GENERAL

Switches, SPEAKERS	OFF−A−B−A+B
SELECTOR	AM−FM−PHONO−AUX 1 −AUX 2
MODE	MONO − STEREO
Others	TAPE MONITOR-A, TAPE MONITOR-B, NOISE FILTER, FM MUTING, LOUDNESS
AC Outlets	1 switched and 1 unswitched
Power Consumption	137 watts at full power. 40 watts at no signal.
Dimensions	17-1/8" W, 5-3/4" H, 13-5/8"D.
Weight	21.05 lbs.

www.hifiengine.com

KENWOOD ELECTRONICS, INC.

- 15777 SOUTH BROADWAY, GARDENA, CALIFORNIA 90248
- 72-02 51ST AVENUE, WOODSIDE. N.Y. 11377

CANADIAN EXCLUSIVE DISTRIBUTOR

MAGNASONIC CANADA LTD.

- 4980 BUCHAN ST. MONTREAL P.Q, CANADA
- 14 BANIGAN DRIVE THORNCLIFFE PARK TORONTO CANADA

© 1972-8 PRINTED IN JAPAN (T)

www.hifiengine.com