KR-5150 SCHEMATIC DIAGRAM

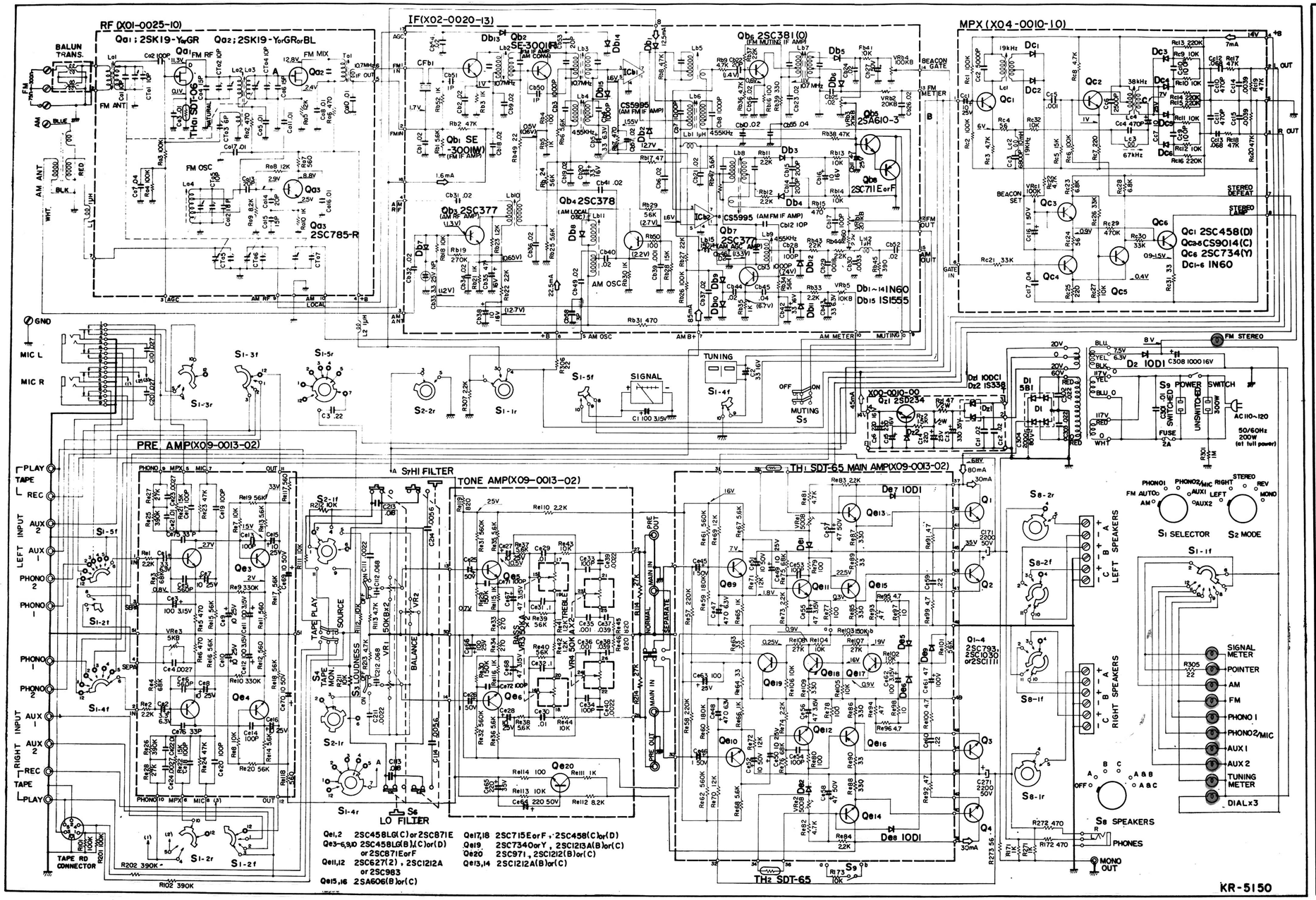

POWER TRANSFORMER ARRANGEMENTS

- For AC 110-120 V/220-240 V Sets

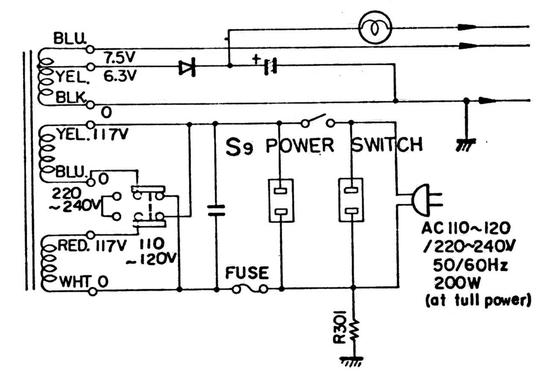

NOTE: A 2A fuse is placed in the power transformer 7.5 V circuit for the sets sold in Europe except England.

Note: The schematic diagram above is for the KR-5150 receivers made for the operation in AC 110-120 V power source areas. Revised power transformer circuits for those receivers made to accept different power source voltages are shown at the right. We reserve the right to make modifications in this model in accordance with technical developments.

1971 • 3 PRINTED IN JAPAN B52-0072-10 (KUPMTW) (R)