KENWOOD

HI/FI STEREO COMPONENTS

SERVICE MANUAL

KR-5200

STEREO RECEIVER

www.hifiengine.com

SPECIFICATIONS

FM TUNER SECTION

Antenna Impedance	300/75Ω	
Usable Sensitivity (IHF)	1.8μV	
Harmonic Distortion		
(at 400Hz 100% Mod.)		
MONO	0.5%	
STEREO	0.7%	
Signal to Noise Ratio	65 dB	
Capture Ratio	2.0 dB	
Selectivity (Alt. CH.) (IHF)	60 dB	
Image Rejection	70 dB	
IF Rejection	100 db	
Spurious Signal Rejection	100 dB	
AM Suppression	70 dB	
Stereo Separation (at 1kHz)	40 dB	
(at 10kHz)	25 dB	
Sub Carrier Suppression	60 dB	
Muting Level	10μV	
Quieting Slope	52 dB	5μV
	58 dB	10μV
	65 dB	50μV
Frequency Response	20 ~ 15 kHz +0.5 dB, −2 dB	
Front End	2 FET (1 DG), 4 Gang	
IF Stage	1 IC, 3 element mechanical filter	

AM TUNER SECTION

Antenna	Built in ferrite bar antenna and external antenna terminal.
Usable Sensitivity (IHF)	15μV
Signal to Noise Ration	45 dB
Selectirity (IHF)	35 dB
Image Rejection	70 dB
IF Rejection	70 dB
Front End	3 Gang
IF Stage	2 stages

AMPLIFIER SECTION

Dynamic Power Output (IFH)	
Both CH. 4Ω 1kHz	140 watts
Both CH. 8Ω 1 kHz	115 watts
Continuous Power Output	
Each CH. 4Ω 1kHz	52/52 watts
Each CH. 8Ω 1kHz	44/44 watts
Both CH. 4Ω 1kHz	40/40 watts
Both CH. 8Ω 1kHz	33/33 watts
Both CH. 8Ω 20 ~ 20 kHz	30/30 eatts
Harmonic Distortion (at rated)	0.5%
(at −3 dB rated)	0.1%
I.M. Distortion (at rated)	0.5%
(at −3 dB rated),	0.1%
Frequency Response	20 ~ 40 kHz ±2 dB
(High Level Input)	
Power Band Width (IHF)	17 ~ 30,000 Hz

Input Sensitivity		
PHONO	2.5 mV	50 kΩ
MIC	3 mV	25 kΩ
AUX 1	150 mV	30 kΩ
AUX 2	150 mV	30 kΩ
TAPE PLAY A	150 mV	30 kΩ
TAPE PLAY B	150 mV	30 kΩ
Recording Output		
TAPE REC A	150 mV	
TAPE REC B	150 mV	
DIN	30 mV	
Damping Factor (at 8Ω)	50	
Hum and Noise		
PHONO	65 dB	
MIC	55 dB	
AUX 1	75 dB	
AUX 2	75 dB	
TAPE PLAY A	75 dB	
TAPE PLAY B	75 dB	
Speaker Impedance	4 ~ 16Ω	
Tone Control		
BASS (at 100Hz)	±10 dB	
TREBLE (at 10kHz)	±10 dB	
Filter		
LOW (at 100Hz)	−7 dB	
HIGH (at 10kHz)	−10 dB	
Loudness Control (−3 dB)		
at 100Hz	+10 dB	
at 10kHz	+5 dB	

GENERAL

Switches:	**SPEAKERS**	OFF−A−B−C−A+B−A+C
	SELECTOR	AM−FM−PHONO−AUX 1−AUX 2−MIC
	MODE	LEFT−RIGHT−STEREO−REV−MIX
	OTHERS	TAPE MONITOR A, TAPE MONITOR B, LOW−HIGH FILTER, FM MUTING, LOUDNESS, MIC jack
AC Outlets	**SWITCHED**	1
	UNSWITCHED	1
Semiconductors		2 FETs, 1 IC, 51 Transistors, 48 Diodes
Power Consumption		
at full power		260 watts
at no signal		40 watts
Dimensions		17-1/18"(W) x 5-3/4"(H) x 14"(D)
Weight		24.6 lbs.
Walnut Cabinet (included price)		YES

www.hifiengine.com

TROUBLE SHOOTING

Symptom	CHECK Unit (Page)					
	R.f. (4)	I.f. (4 ~ 5)	MPX (5)	Pre (6)	Tone (6)	Main (6 ~ 7)
No sound				●	●	●
Distortion		●				●
Noise		●		●	●	●
Dynamic range				●		
Hum				●	●	
Crosstalk				●		
Bias voltage variation						●
Oscillation						●
Heated transistor						●
Tone					●	
Poor output at low frequency in PHONO position				●		
Protection						●
Out of dial calibrations	●					
Not light stereo indicator		●	●			
Drift	●					
Separation			●			
Interference	●	●				
Carrier-leak			●			
Sensitivity	●	●				
Muting		●				
Meter		●				
Not receive f.m. broadcastings	●	●				
Not receive a.m. broadcastings		●				

Note: This trouble shooting has not power supply, sub unit and etc..

www.hifiengine.com

■ R.f. Unit (X01-1030-10)

Complaint	Possible cause	Repairs
Not receive f.m. broadcastings	Poor connection of supply voltage line.	Check the terminal No. 3.
	Faulty transistor Qa_3.	Check and replace.
	Poor adjustment of trimmer CTa_5.	Readjustment.
Poor sensitivity	Poor adjustment.	Readjustment.
	Faulty FETs $Qa_{1,2}$.	Check and replace.
	Poor connection of supply voltage line.	Check coils $La_{5,6}$.
Out of calibrations	Poor adjustment of local oscillation.	Readjustment.
Drift	Faulty trimmer CTa_4 of local oscillator.	Check and replace.
Interference	Poor adjustment.	Readjustment

■ I.f. Unit (X02-1020-10)

Not light stereo indicator	Poor adjustment of coil Lb_6 and potentiometer VRb_3.	Readjustment
	Faulty transistors $Qb_{7,8}$ and diode Db_{11}.	Check and replace.
	Faulty or poor adjustment of MPX unit.	Check and replace, or readjust
Not operate f.m. muting	Faulty transistors $Qb_{9,10}$ and diode Db_{12}.	Check and replace.
Not receive broadcastings with muting off (but signal meter's pointer swings)	Faulty transistor Qb_{10}.	Check collector of Qb_{10} to be 0V under operating.
	Faulty IC ICb_1.	Check and replace.
Distortion	Faulty diodes $Db_{4,5}$ and coil Lb_3.	Check and replace.
	Poor adjustment of coil Lb_3.	Readjustment
Poor f.m. sensitivity. (but signal meter's pointer swings)	Faulty transistors $Qb_{4,5}$, and IC ICb_1.	Check and replace.
(Not meter's pointer swings)	Faulty transistors $Qb_1 \sim 3$.	Check and replace.

www.hifiengine.com

■ I.f. Unit (X02-1020-10)

Complaint	Possible cause	Repairs
Not receive f.m. broad-castings. (but singal meter's pointer swings)	Faulty transistor $Qb_{4,5}$, and IC ICb_1.	Check and replace.
(But meter's pointer not swing)	Poor connection of supply voltage line.	Check the terminal No. 6.
Not receive (a.m.)	Faulty transistors $Qb_{11 \sim 15}$.	Check and replace.
Noise (a.m.)	Faulty variable capacitor.	Check it.
Interference (a.m.)	Faulty trans. and coils $Lb_{11 \sim 15}$.	Check and replace.
Distortion (a.m.)	Faulty diodes $Db_{13, 14}$.	Check and replace.
Poor sensitivity (a.m.)	Faulty transistors $Qb_{11 \sim 14}$.	Check and replace.

■ MPX Unit (X04-1010-10)

Not light stereo indicator	Faulty pilot lamp.	Check and replace.
	Poor i.f. stage.	Readjustment
	Poor adjustment of potentiometer VRc_2.	Readjustment
	Faulty transistors $Qc_{2,4 \sim 7}$.	Check and replace.
Not separate (but stereo indicator lights)	Faulty of transistor Qc_3 and coil Lc_4.	Check and replace.
Poor separation	Poor adjustment of coils $Lc_{2 \sim 4}$ and potentiometer VRc_1.	Readjustment
	Faulty diodes $Dc_{3 \sim 10}$.	Check and replace.
Carrier-leak	Faulty diodes $Dc_{3 \sim 10}$.	Check and replace.
	Faulty capacitor $Cc_{9,10}$.	Check and replace.
	Faulty low-pass filter Lc_5.	Check and replace.

www.hifiengine.com

■ Preamp Unit (X08-1080-10)

Complaint	Possible cause	Repairs
No sound	Faulty transistors $Qj_{1 \sim 4}$.	Check and replace.
Noise	Faulty transistors $Qj_{1,2}$, resistors $Rj_{5,6,25,26}$, and capacitors $Cj_{1,2,21,22}$.	Check and replace.
Dynamic range	Faulty transistors $Qj_{1,2}$ and capacitors $Cj_{1,2}$.	Check and replace.
Hum	Faulty capacitor $Cj_{23,24}$.	Check and replace.
Poor output of low frequency at phono position	Faulty capacitor $Cj_{15,16,19,20}$.	Check and replace.

■ Tone amp Unit (X11-1030-01)

No sound	Faulty transistors $Qi_{1,2}$ resistors $Ri_{1 \sim 10}$. and capacitors $Ci_{1,2,5,6,7,8}$.	Check and replace.
Noise	Faulty transistors $Qi_{1,2}$, resistors $Ri_{1 \sim 4}$, and capacitors $Ci_{1,2}$.	Check and replace.
Boost and cut	Faulty potentiometers $VRi_{1,2}$, and capacitors $Ci_{9 \sim 16}$.	Check and replace.

■ Main amp Unit (X07-1100-00)

No sound. (protection relay is off.)	Under operating protections, faulty transistors $Qe_{1 \sim 14}$.	Check and replace. (replacement order first $Qe_{11 \sim 14}$, second $Qe_{7 \sim 10}$, third $Qe_{5,6}$, fourth $Qe_{1 \sim 4}$).
	Faulty resistors $Re_{31,32}$.	Check and replace.
	Under not operating protection, faulty transistors $Qe_{13 \sim 15}$.	Check and replace.
Distortion	Faulty resistors $Re_{29 \sim 32}$.	Check and replace.
	Output Waveform 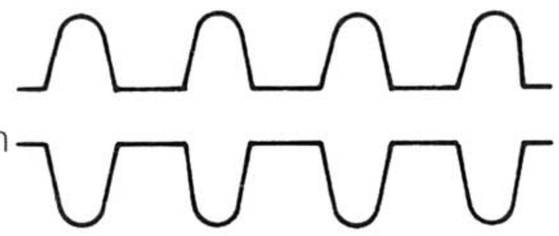 →	Check resistors $Re_{31,32}$.
	→	Check resistors $Re_{29,30}$.
(Cross-over distortion)	Faulty diodes $De_{3,4}$.	Check and replace.
Hum	Faulty capacitor Ce_{17}.	Check and replace.
Noise	Faulty transistors $Qe_{1 \sim 4}$, capacitors $Ce_{3,4,11,12}$, and diode De_{13}.	Check and replace.
Shock noise	Faulty capacitor Ce_{16}, and transistors $Qe_{18,19}$.	Check and replace.

www.hifiengine.com

Complaint	Possible cause	Repairs
Bias voltage variation	Faulty transistors $Qe_{1 \sim 4}$, and diode De_{13}.	Check and replace.
Oscillation	Faulty capacitors $De_{1, 2, 7, 8, 13, 14}$ and resistors $Re_{33, 34}$.	Check and replace.
Heated power transistor.	Faulty potentiometers $VRe_{1, 2}$, resistors $Re_{21, 22}$, and varistors $De_{3, 4}$.	Check and replace.
Heated drive stage transistor.	Faulty resistors $Re_{29 \sim 32}$.	Check and replace.
Misoperation of protection circuit.	Diodes and faulty diodes $De_{5, 6}$ and resistor Qe_{15}.	Check and replace.
	Faulty diodes $De_{8 \sim 10}$, transistor Qe_{16}.	Check and replace.

www.hifiengine.com

ADJUSTMENT

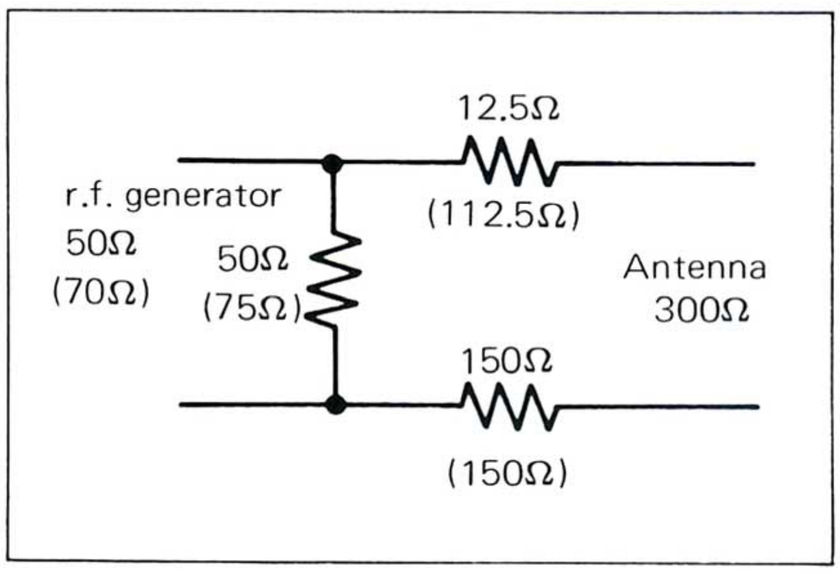

▲ Dummy antenna

[BEFORE ADJUSTMENT]

* Tuning dial is set to the proper point corresponding to no radio stations.
* The sweep and the r.f. generator are set to the minimum response on oscilloscope as possible.
* Connecting the r.f. generator to the antenna terminal using the dummy antenna . . . refer to figure.
* Use the insulated screwdriver adjusting the i.f.t.
* SELECTOR is FM AUTO position.
* FM MUTING is OFF position except necessity.
* Test point shown in the schematic diagram.

[ADJUSTING FM-IFT]

1. Connect the sweep generator being set to 10.7 MHz to test point 1 (TP1) through a capacitor 3 pF.
2. Connect the oscilloscope to test point 2.
3. Adjust i.f. trans La8, Lb1 so that output is the best.

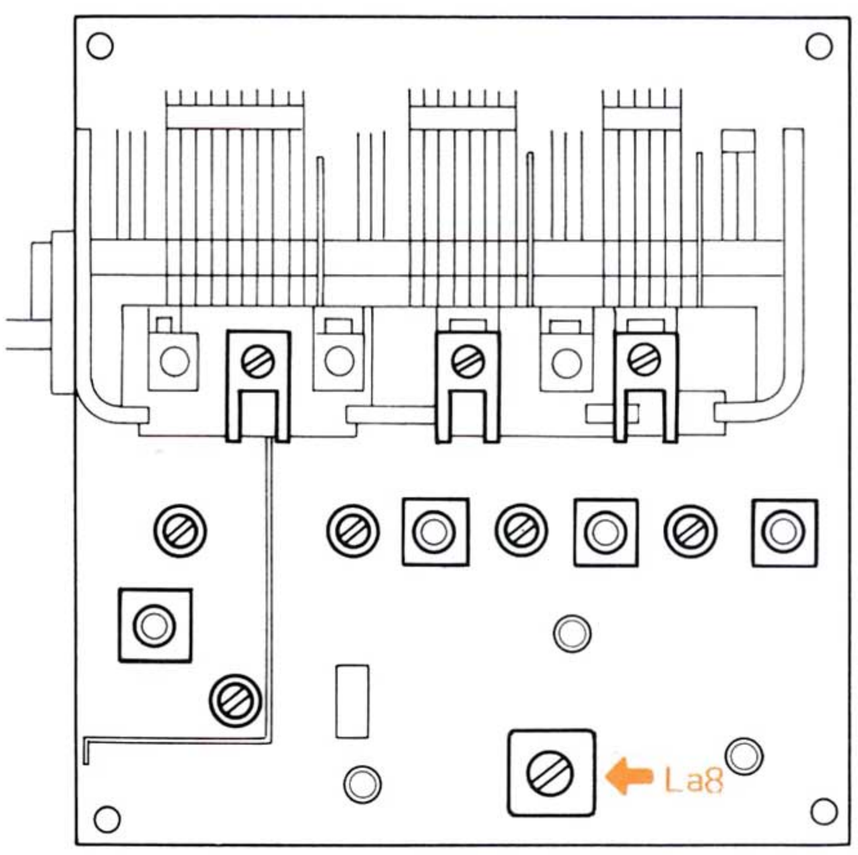

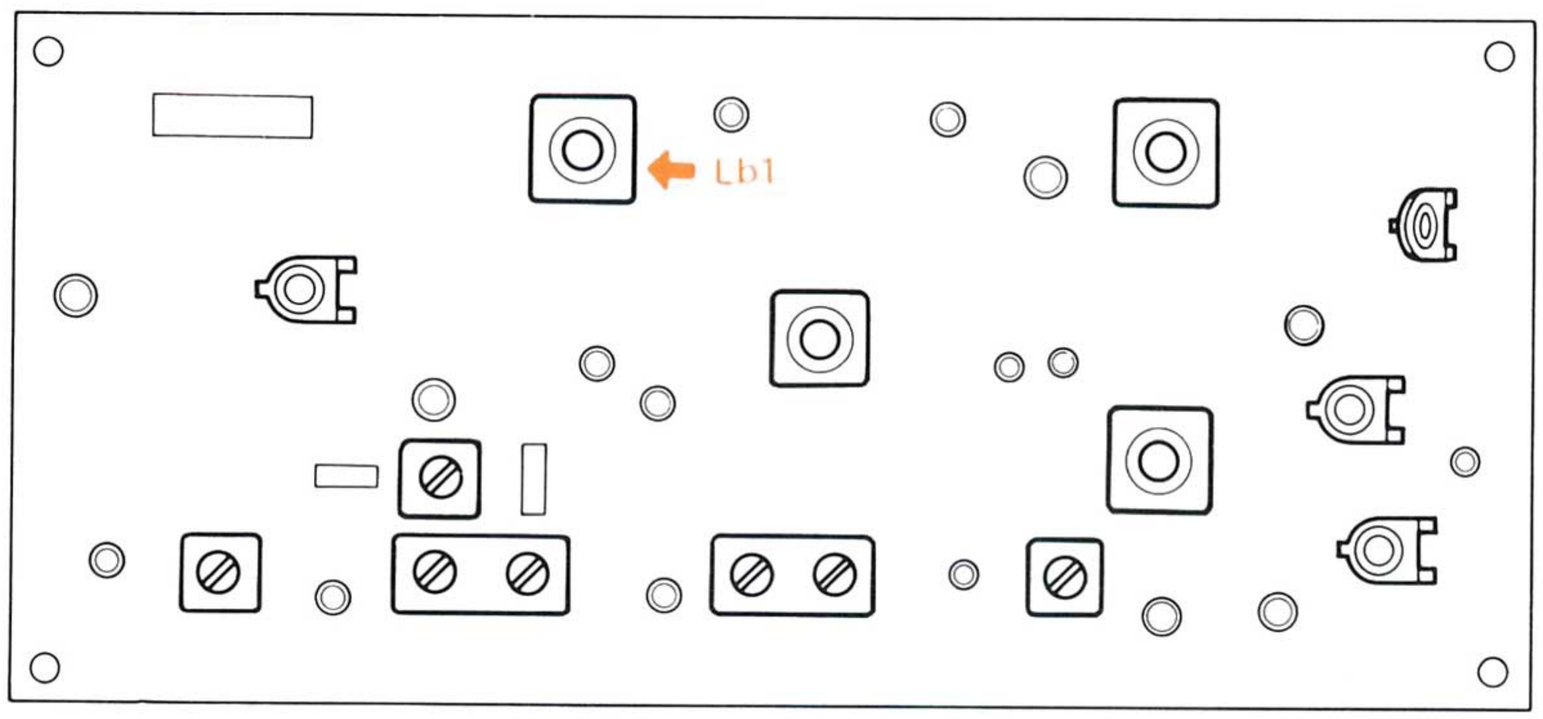

▼ Waveform of test point 2

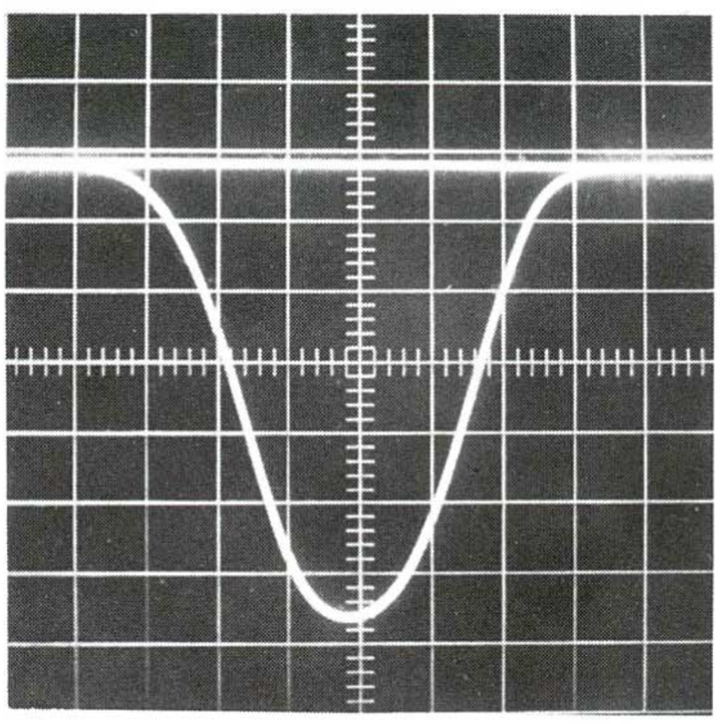

[ADJUSTING DISCRIMINATOR]

1. With no test equipments, adjust the secondary (top) of discriminator coil Lb3 so that tuning meter's pointer is between the center zone.
2. Connect d.c. voltmeter to test point 3.
3. Connect the r.f. generator being set 98 MHz, no modulation, antenna input of 5 ~ 7 μV to antenna terminal.
4. Adjust trigger coil Lb6 so that voltmeter is max.
5. Adjust meter coil Lb5 so that signal meter is max.
6. Set the output of r.f. generator so that voltmeter is 2.5V at test point 3.
7. Adjust the potentiometer VRb3 so that voltmeter is 2V at test point 3.
8. Switch the output of r.f. generator being set antenna input of 7μV to antenna terminal.
9. Adjust the potentiometer VRb1 so that voltmeter is 1.4V at test point 3.
10. Connect the r.f. generator being set 98 MHz, modulation of 400 Hz, deviation of 75 kHz, to antenna terminal and the oscilloscope and VTVM to REC jack.
11. Adjust the primary (bottom) of discriminator coil Lb3 so that distortion is min.
12. Adjust the potentiometer VRb2 so that voltmeter is 1V at REC jack.

www.hifiengine.com

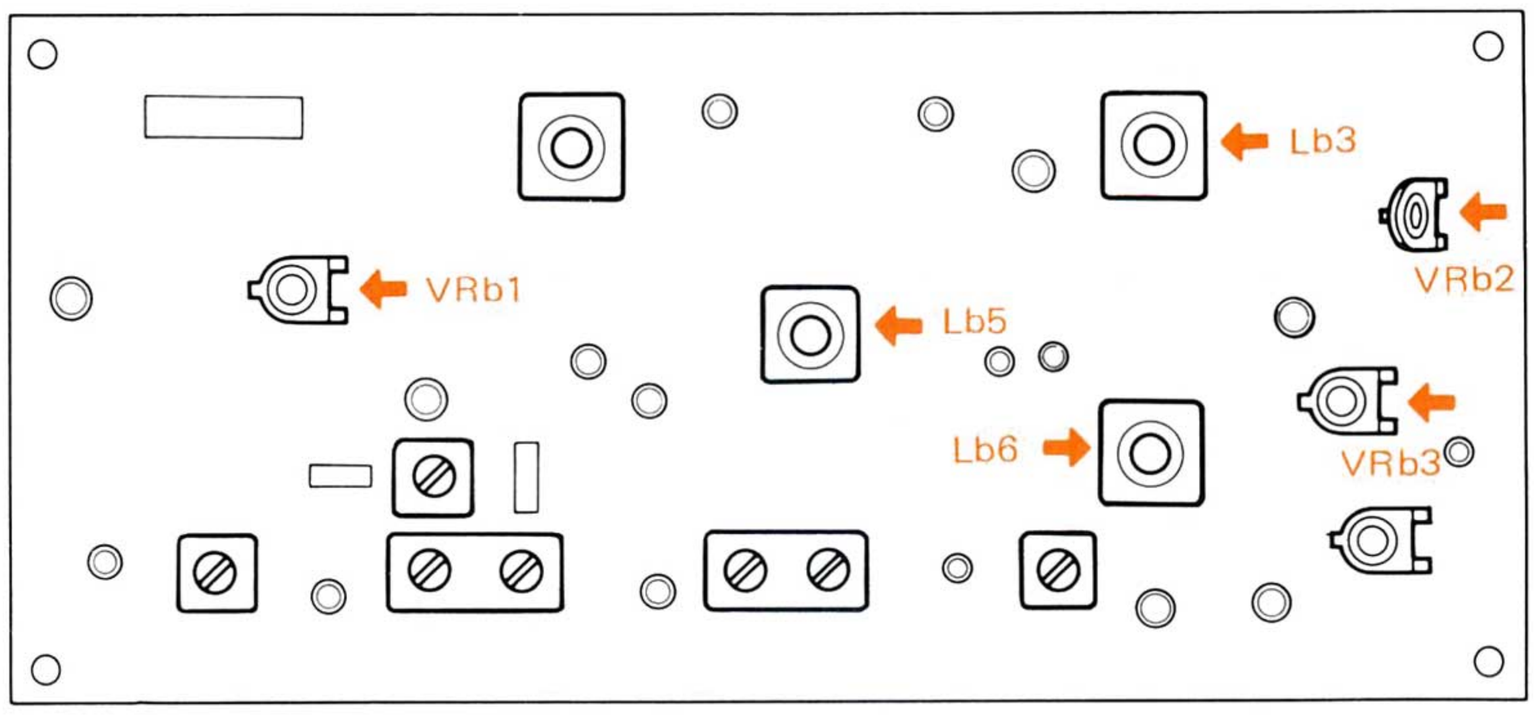

[ADJUSTING TRACKING]

1. Connect the r.f. generator to antenna terminal through a dummy antenna.
2. Set the r.f. generator to 90 MHz, the modulation of 400 Hz, the deviation of 75 kHz, and the input of 10 μV.
3. Connect the VTVM to the recording jack (REC jack).
4. Meet the dial pointer to 90 MHz on the dial calibrations.
5. Adjust the core of r.f. trans La1 ~ 3 and local oscillator coil La4 so that the output is the maximum.

1. Set the r.f. generator to 106 MHz, the modulation of 400 Hz, the deviation of 75 kHz and the input of 10 μV.
2. Meet the dial pointer to 106 MHz on the dial calibrations.
3. Adjust the trimmer CTa1 ~ 4 so that the output is the maximum.
   * If there is internal oscillation, adjust the trimmer CTa5.

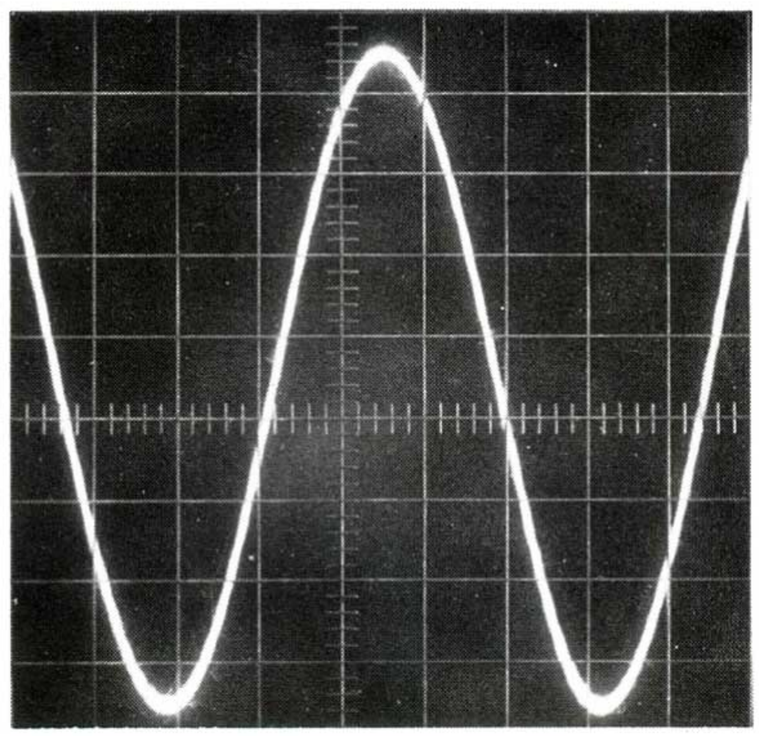

▲ Waveform of Rec jack

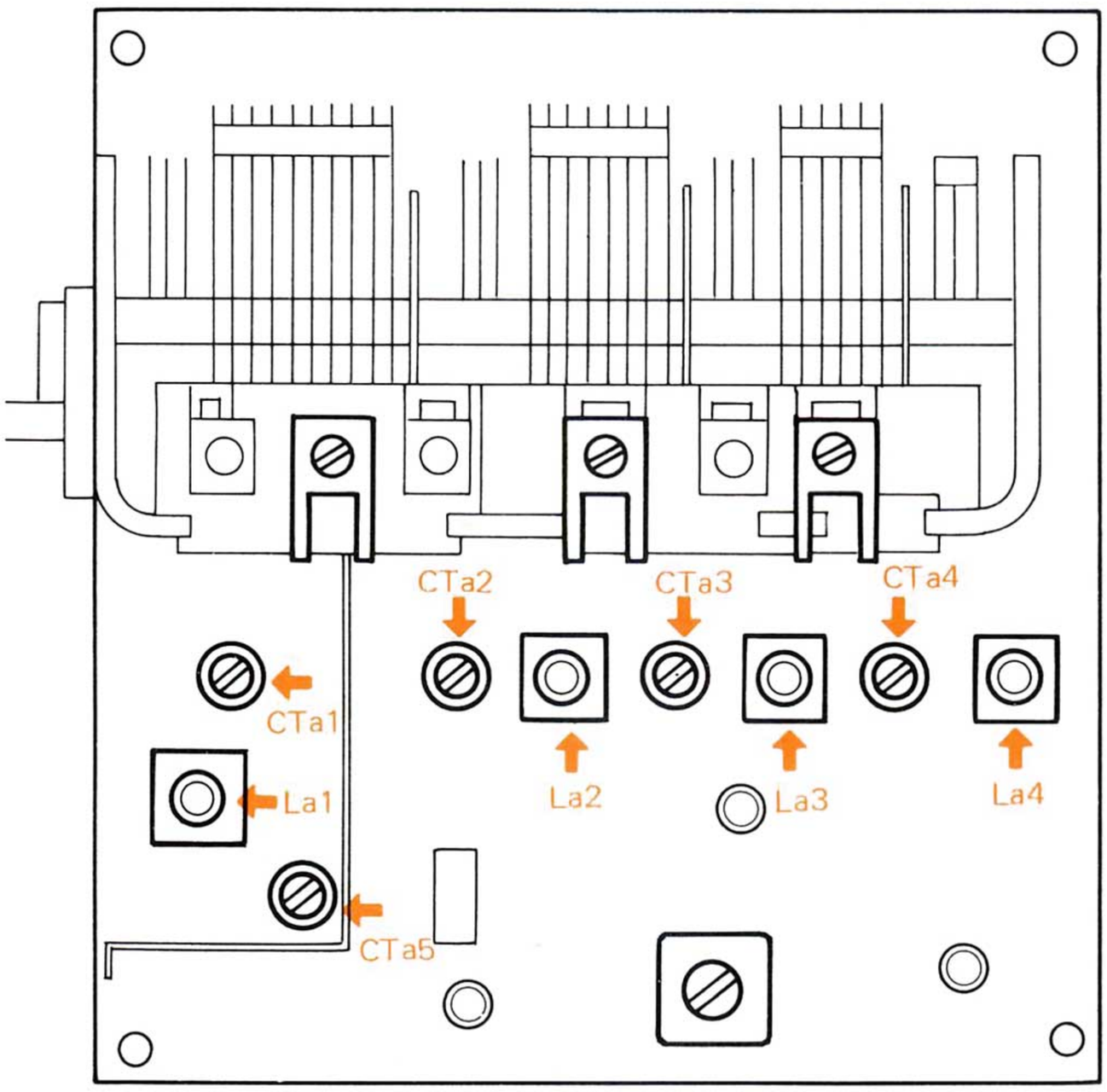

www.hifiengine.com

[ADJUSTING SCA FILTER]

1. Connect the audio generator being set to 67 kHz to the test point 4.
2. Connect the VTVM to the test point 5.
3. Adjust the core of Lc1 so that the output is the minimum.

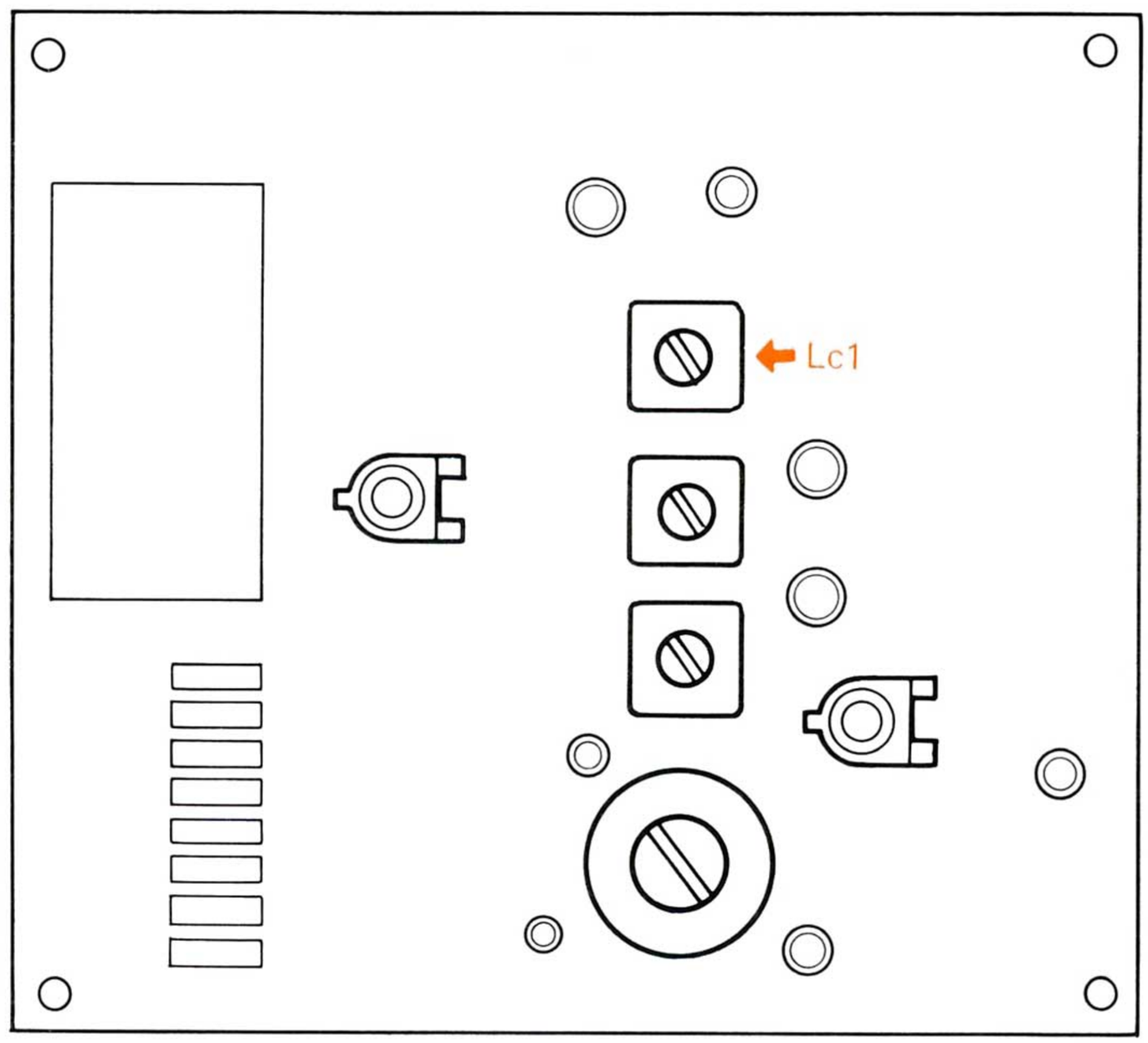

[ADJUSTING MPX]

1. Set the MPX generator to the following.

SELECTOR	→ A + B	PHASE	→ NORMAL
MODULATION	→ 400 Hz	DEVIATION	→ 67.5 kHz

2. Connect the r.f. generator to the antenna terminal and the VTVM to the test point 6.
3. Adjust the core of Lc2 ~ 4 so that the output is the maximum.
4. Switch the selector of MPX generator of A - B (reverse).
5. Remove the VTVM to the REC jack.
6. Adjust the core of Lc4 so that the output is the best.
7. Switch the selector and deviation of the MPX generator to A + B and 40 kHz.
8. Adjust the potentiometer VRC2 so that stereo indicator is on.
9. Switch the selector of the MPX generator to A (R).
10. Adjust the potentiometer VRc1 so that the output is the minimum.
11. Switch the selector of the MPX generator to B (L).
12. Adjust the potentiometer VRc1 so that the output is the minimum.

Note: In case of difference between right and left set the potentiometer (VRc1) to average.

www.hifiengine.com

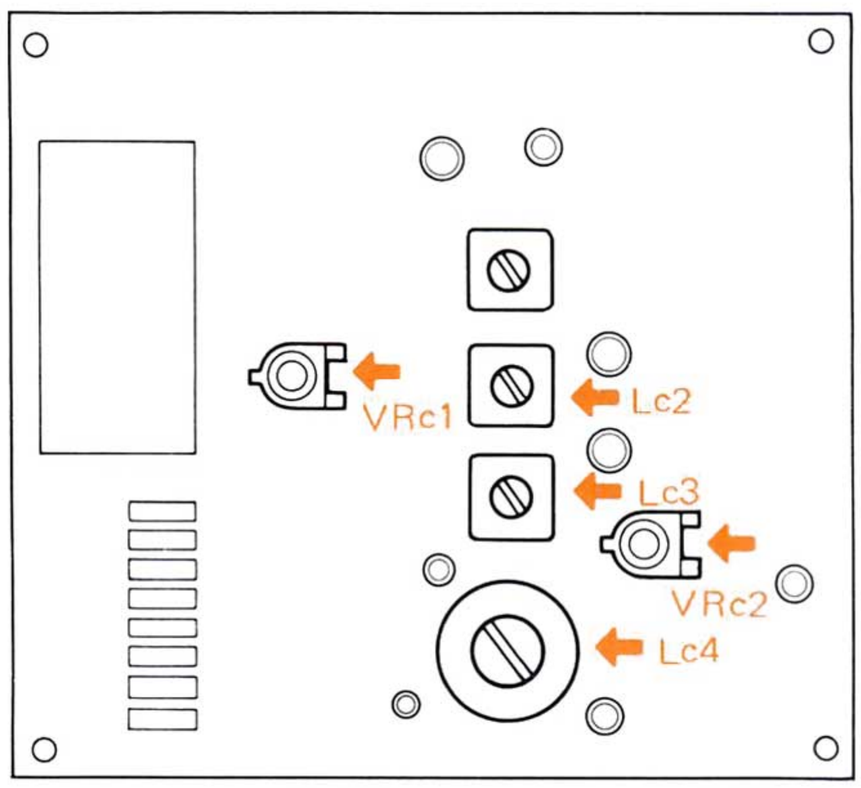

[ADJUSTING AM-IFT]

1. Connect the sweep generator being set to 455 kHz to antenna terminal.
2. Connect the oscilloscope to the test point 7.
3. Adjust the core of i.f. trans Lb13 ~ 15 so that the output is the best.

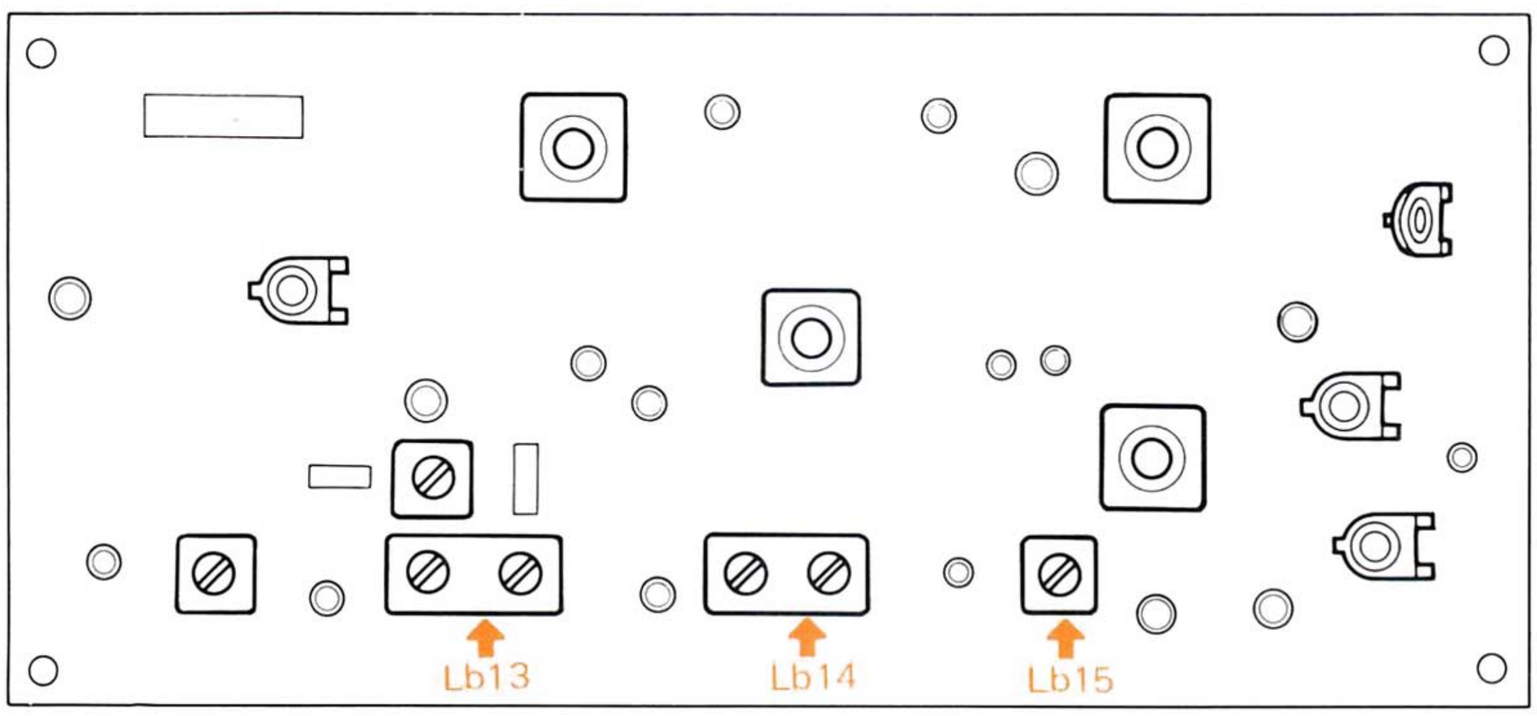

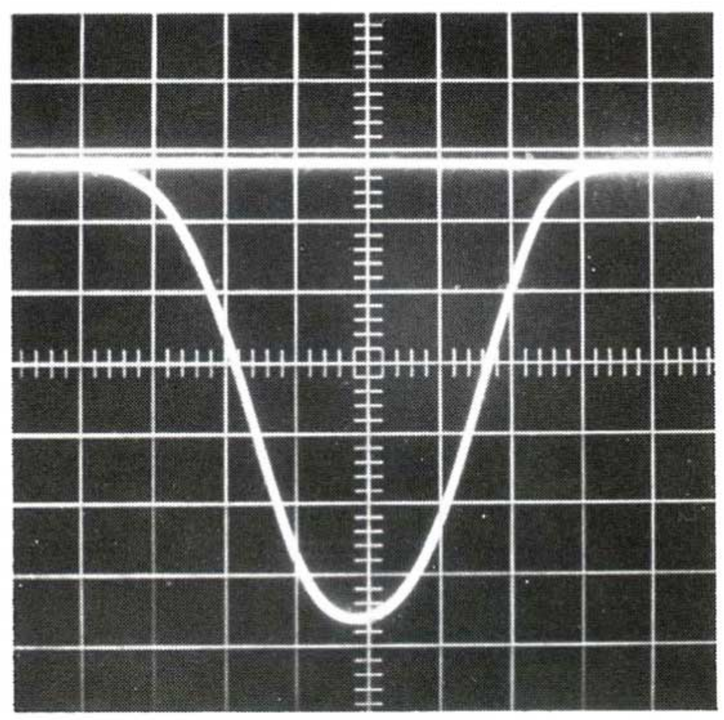

▲ Waveform of test point 7

[ADJUSTING TRACKING]

1. Connect the r.f. generator being set to 600 kHz, modulation of 30% at 400 Hz to antenna terminal.
2. Connect the VTVM to the REC jack.
3. Meet the dial pointer to the 600 kHz on the dial calibrations.
4. Adjust the osc-trans. Lb11 r.f.-trans. Lb12 and ferrite antenna so that the output is the max.

1. Connect the r.f. generator being set to 1,400 kHz, modulation of 30% at 400 Hz to antenna terminal.
2. Connect the VTVM to the REC jack.
3. Meet the dial pointer to the 1,400 kHz on the dial calibrations.
4. Adjust the trimmer CTa6 ~ 8 so that the output is the max.

www.hifiengine.com

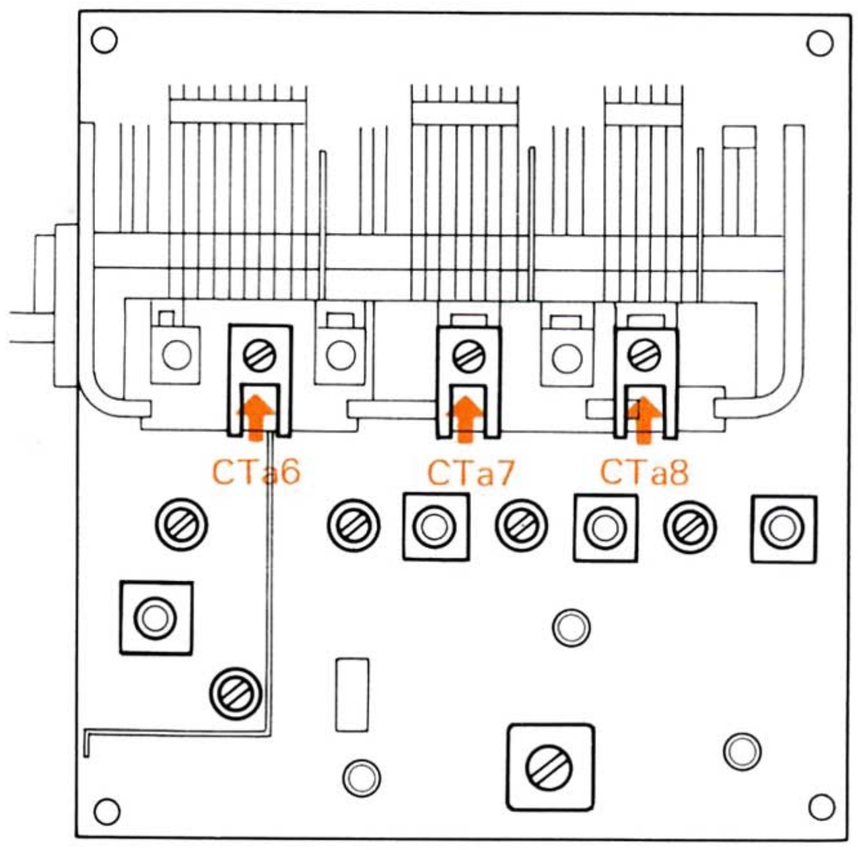

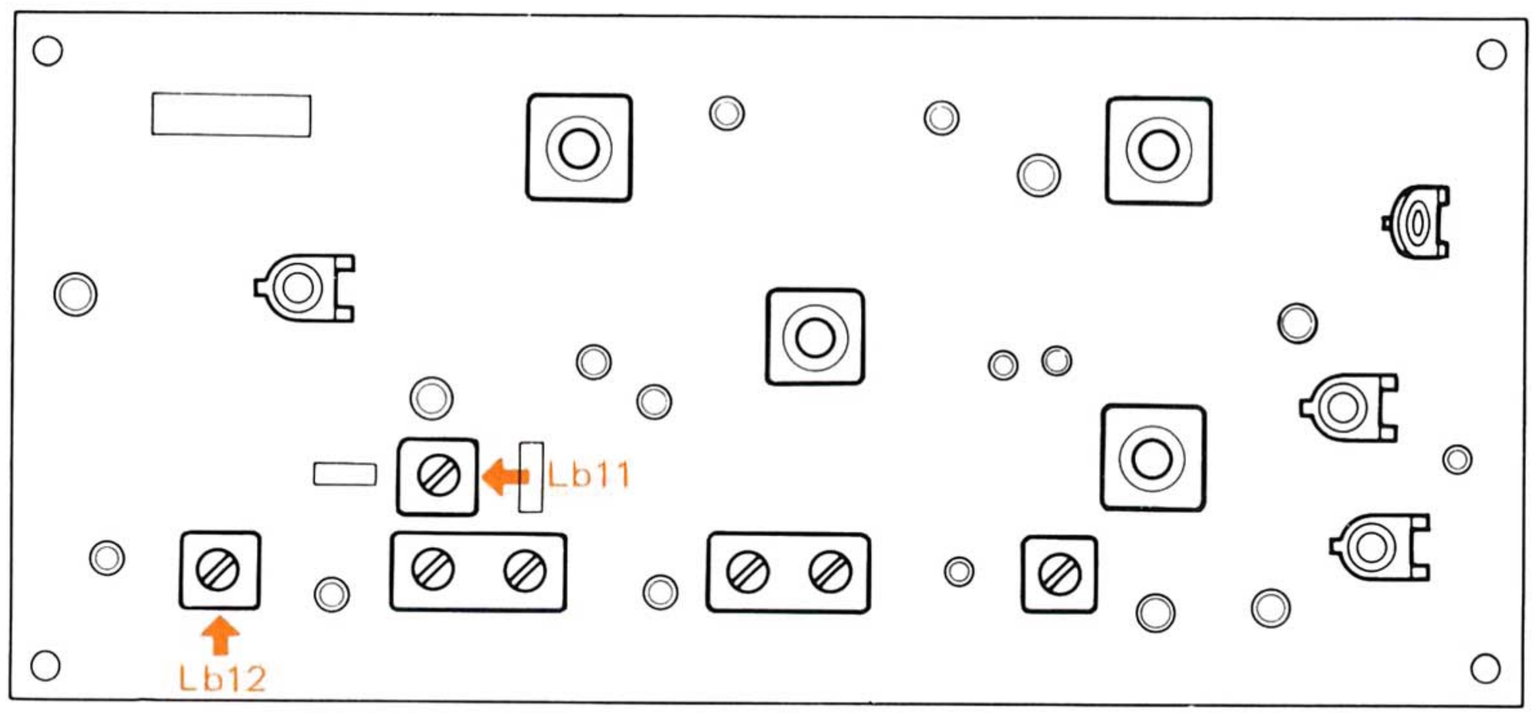

[ADJUSTING METER]

1. Connect the r.f. generator to antenna terminal.
2. Meet the dial pointer to the 1,000 kHz on the dial calibrations.
3. Adjust the potentiometer (VRb4) so that the signal meter indicates "5".

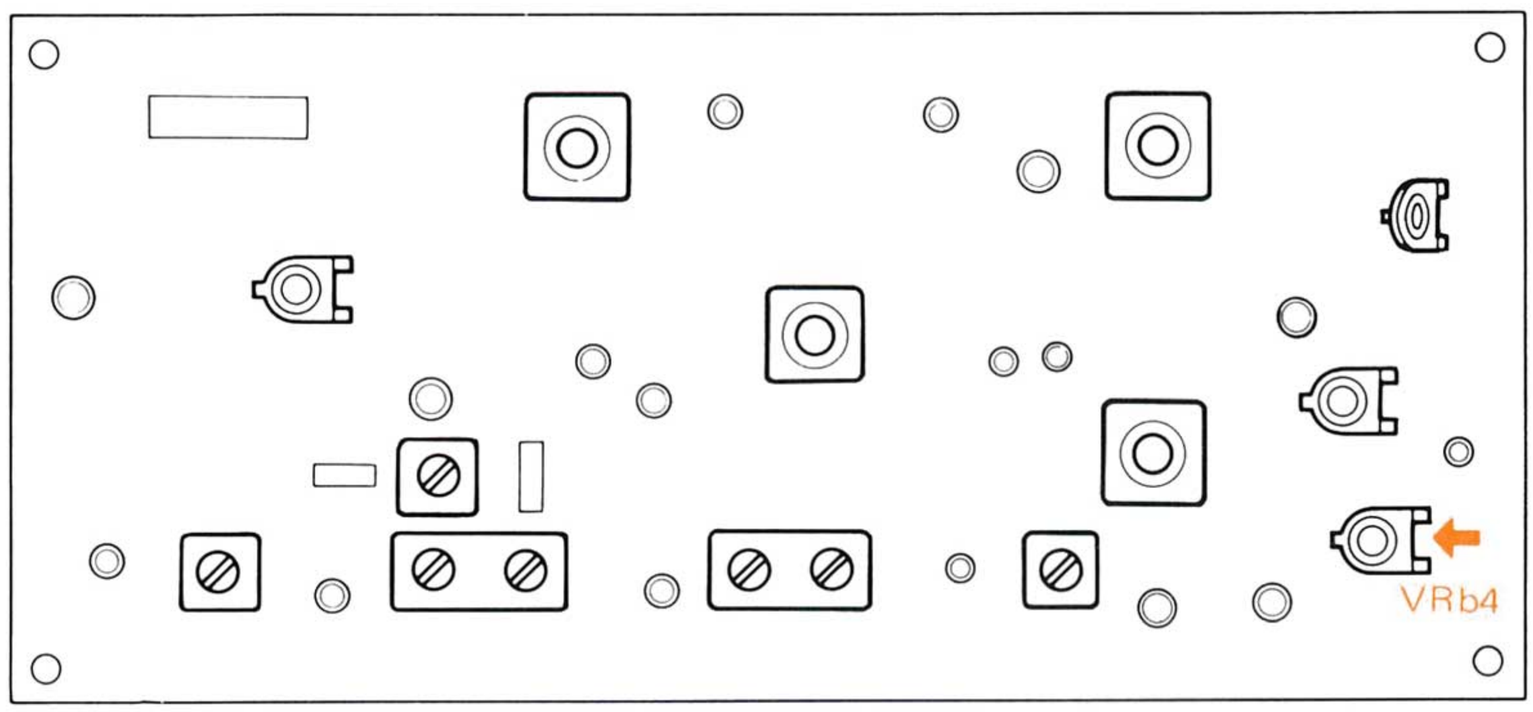

www.hifiengine.com

AUDIO ADJUSTMENT

[BIAS CURRENT]

In the case of using the voltmeter

1. Connect the voltmeter across the emitter resistor of power transistors.
2. Check the voltmeter to be 20mV.
3. If not, turn the PC trimmer potentiometer (VRe1, 2) so that the meter has rating value.

In the case of using the audio generator and oscilloscope, etc.

1. Connect the dummy load (8Ω) to speaker terminal and do the oscilloscope across the dummy.
2. Feed the signal (1 kHz) to the set.
3. Check the waveform to be the best.
4. If not, turn the PC trimmer potentiometer (VRe1, 2) so that the waveform is distortionless.
5. Check the voltmeter to be 20mV.

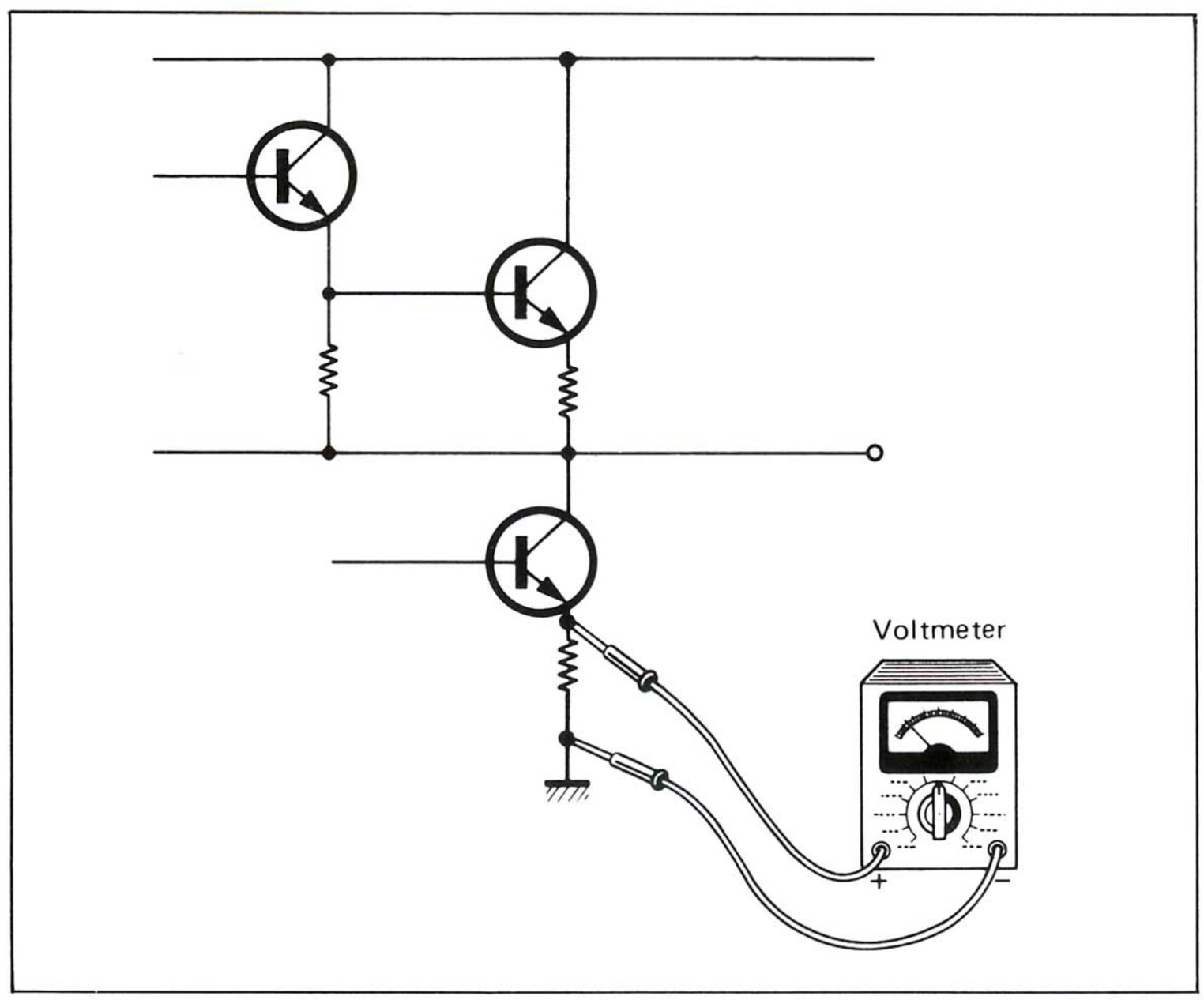

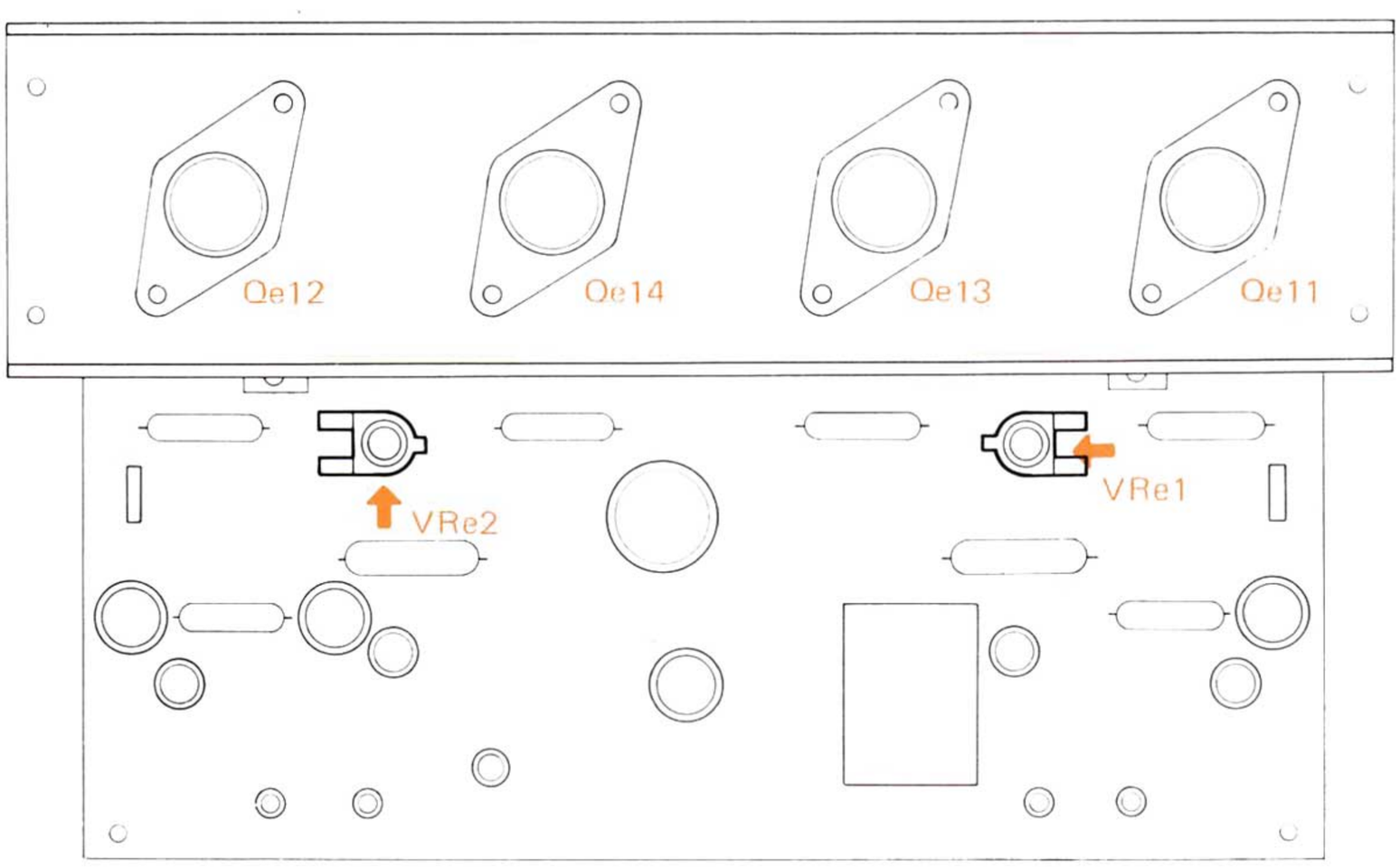

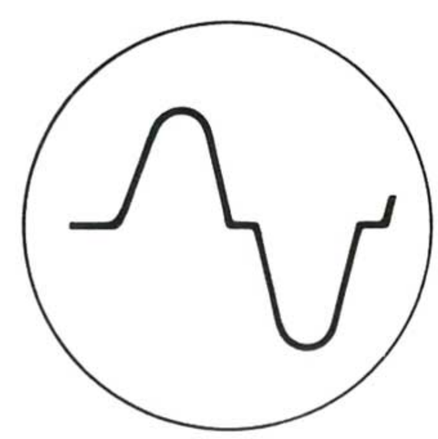

Distorted waveform

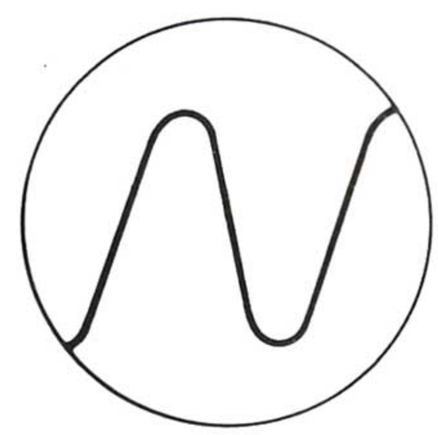

Best waveform

www.hifiengine.com

HOW TO REPLACE POWER TRANSISTOR

[REPLACING POWER TRANSISTOR]

1. Remove screws (not tapping screw).
2. Replace the power transistor with new.
   At this time, don't forget to spread silicone grease on faces of mylar.
3. Fix the power transistor with screw on the heat sink.
4. Check the transistor is not in contact with the heat sink.

Note: 1. Tapping screw holds the transistor socket. Don't remove it without necessity.
2. Before fix the transistor, in the case of replacing transistor socket, do the transistor socket.

*Don't forget to spread silicone grease on the faces of mylar.

Caution: KR-5200 has different heat sink being drawn in illustration.

www.hifiengine.com

MOUNTING TEMPLATE

DIRECTIONS FOR PANEL MOUNTING

1. Remove the walnut cabinet.
2. Locate the supporting shelf at the height you wish the receiver positioned.
3. Remove the four bottom legs.
4. An air space must be made between the bottom of the set and the supporting shelf to assure good ventilation and cool operation. This space can be made by placing two boards which measure 9/16" thick by 1" to 2" width between chassis and the supporting shelf.
5. Make panel cutout in the size shown at left 4-7/8" x 16-5/16". The bottom of the cutout should be flush with the bottom plate of the receiver, as shown in the side view. The distance between the bottom of the cutout and the top of the supporting shelf is 9/16".
6. The receiver is held in place by two bolts. The holes must be made in the shelf to correspond with the holes in the receiver. Use the "Top View" to locate these holes on the supporting shelf. The holes should be made 1/4" in diameter or somewhat larger.

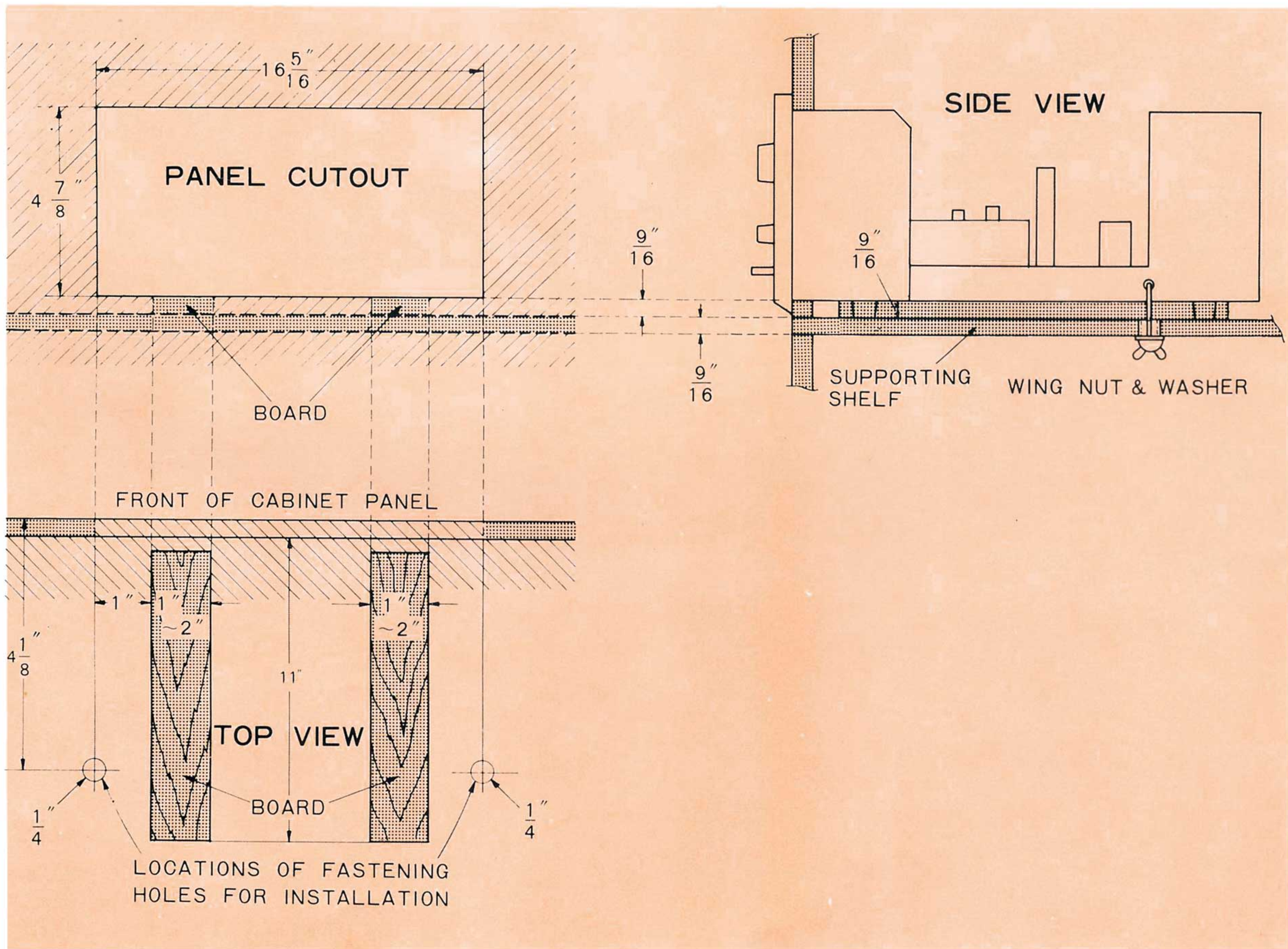

www.hifiengine.com

THE ROTARY SWITCH

- See Fig. 1, for an example.
- S1 means one of rotary switches, number 1 SELECTOR switch.
- Namely, 2 means the 2nd wafer, and 3 means the 3rd wafer. Others are like so. (Fig. 2)
- The numbering of contact points are as shown in Fig. 3.

▼ **Fig. 1**

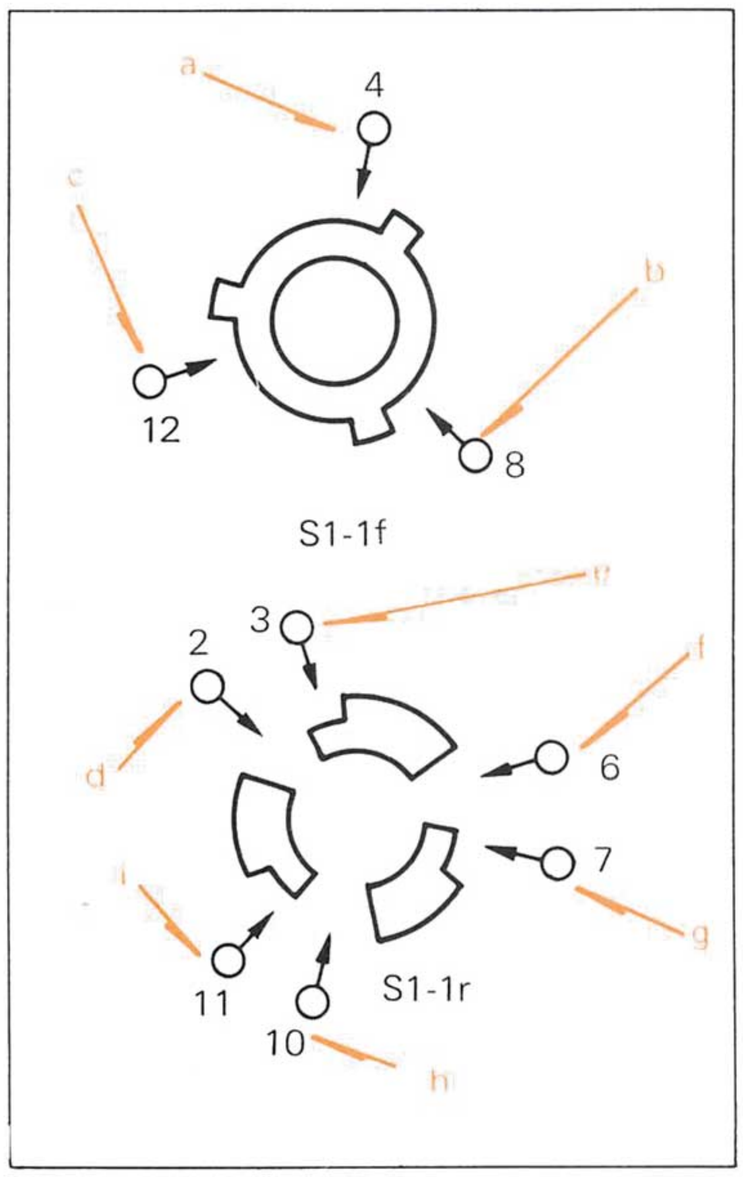

◎ means connection of the same contact point of rear and front wafer.

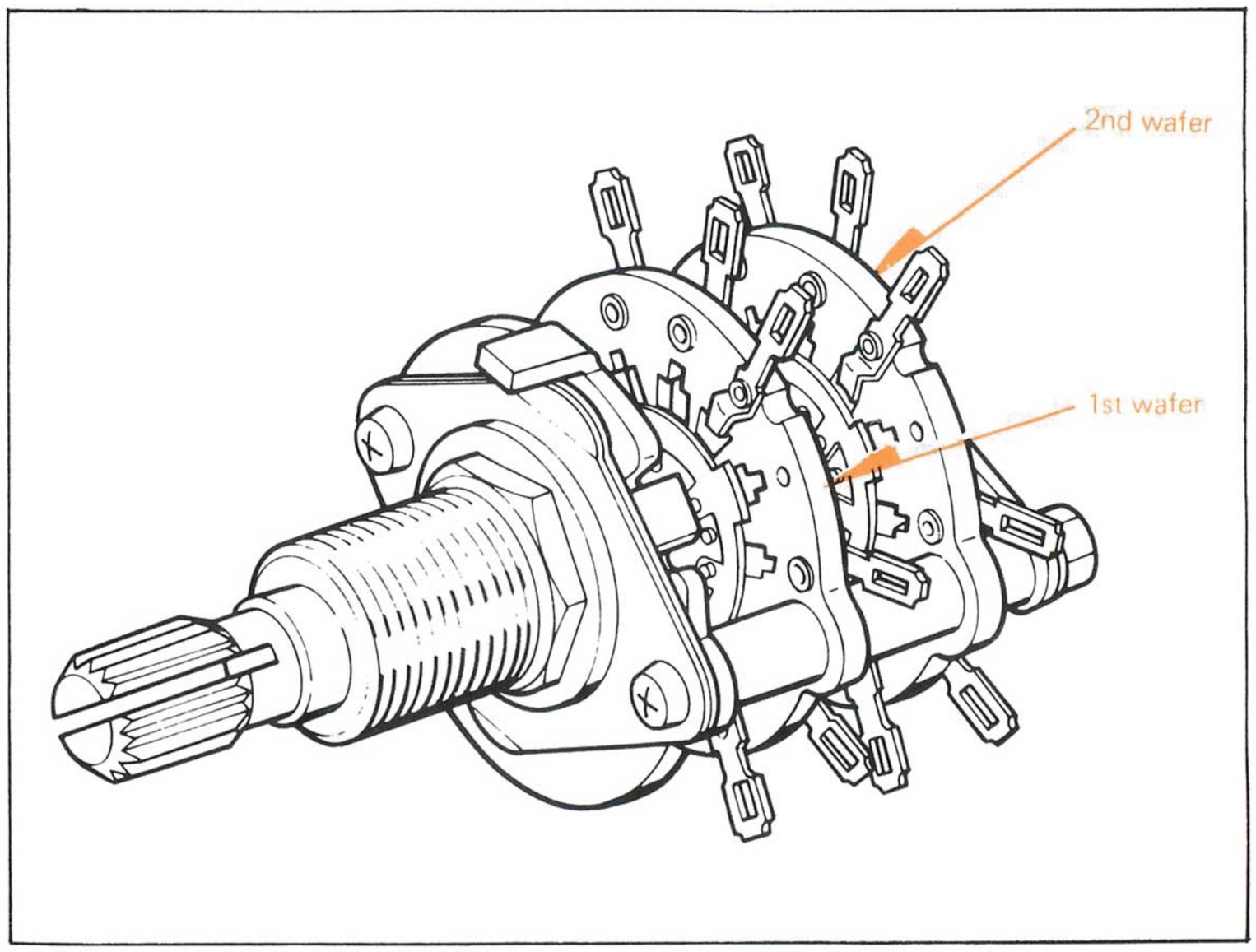

▲ **Fig. 2**

▼ **Fig. 3**

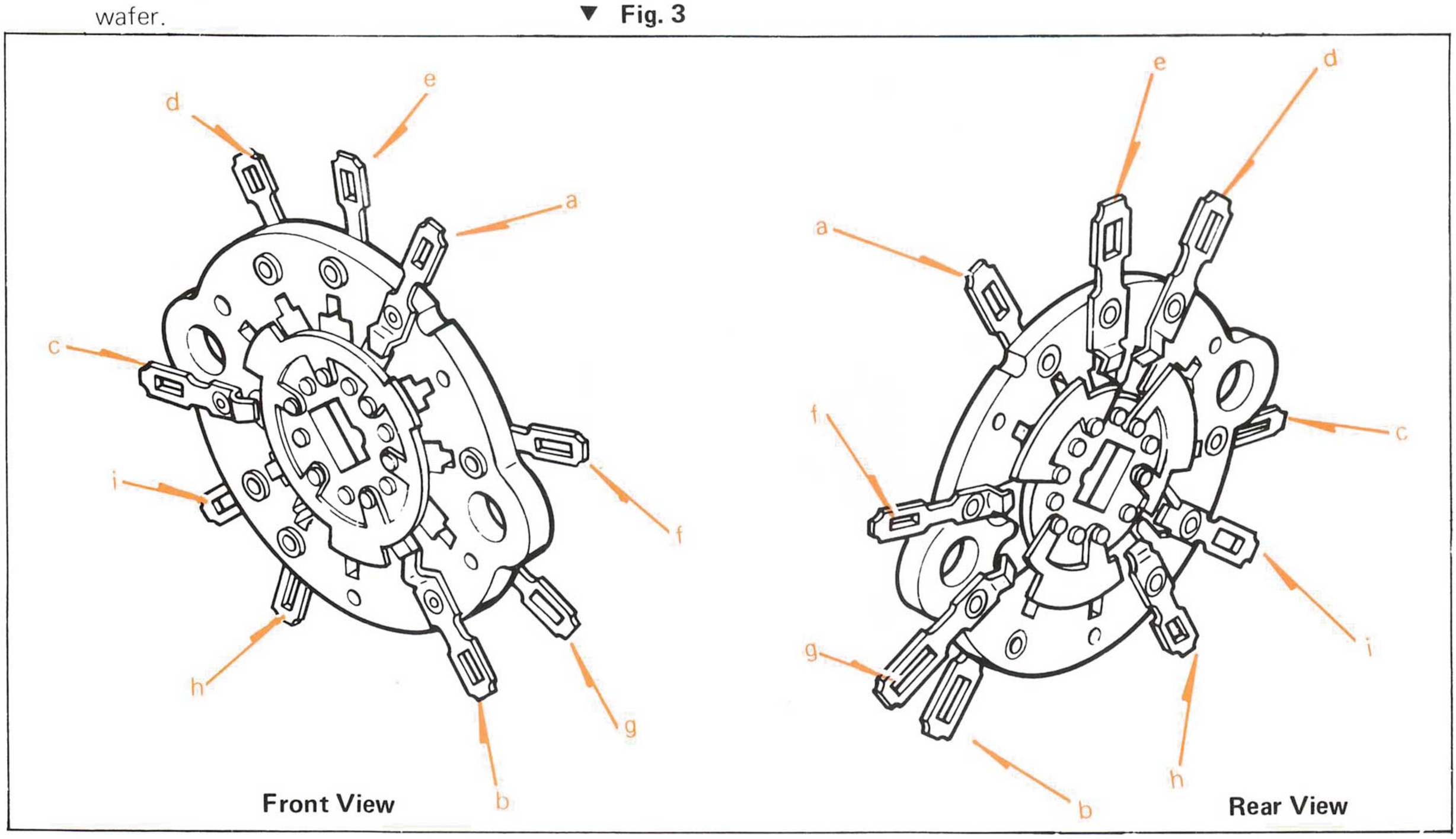

www.hifiengine.com

DIAL CORD STRINGING

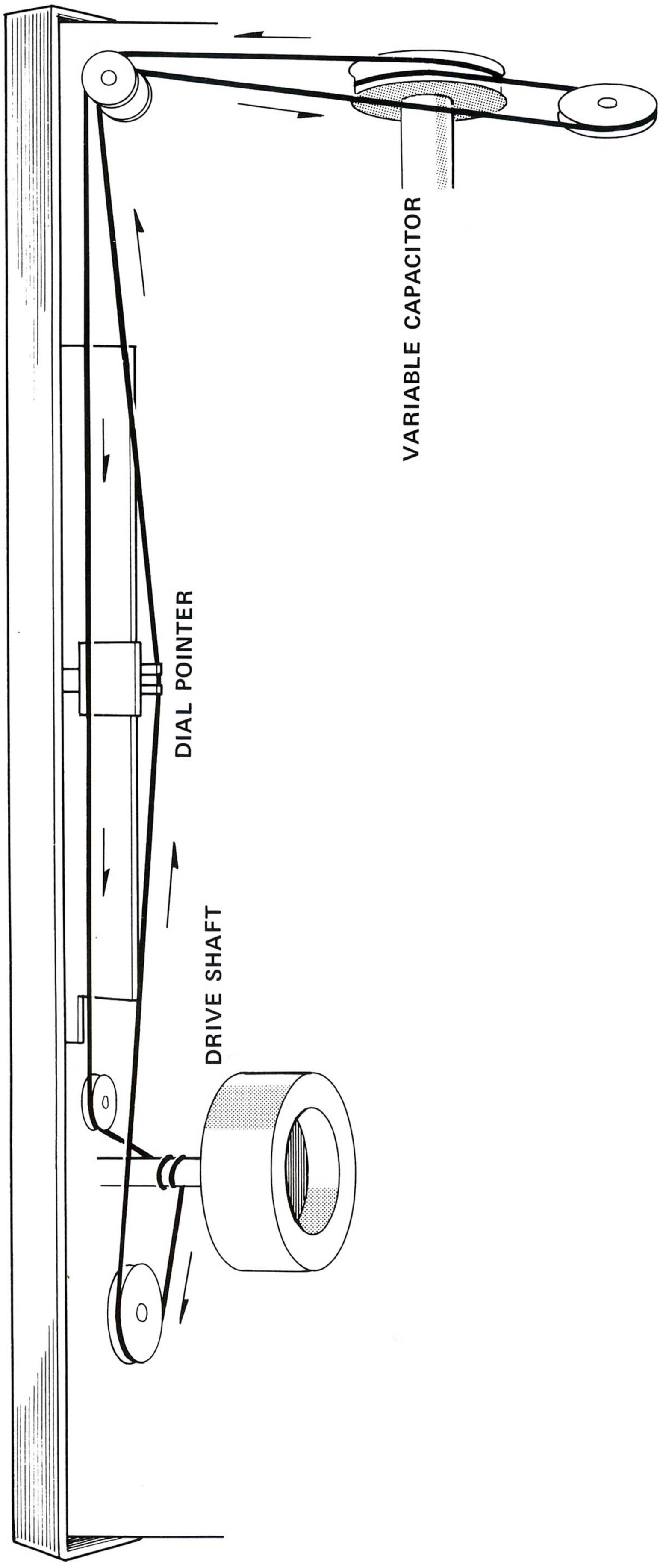

www.hifiengine.com

TABLE OF TRANSISTOR ABSOLUTE MAX. RATINGS

Transistor's name	V_{CBO}	V_{CEO}	V_{EBO}	I_C	I_E	P_C	T_J	h_{FE}	Type
2SA620WL	−60V	−50V	−5V	−50mA	50mA	200mA	125°C	90 ~ 500	Si
2SA673A	−55V	−55V	−4V	−0.5A	0.5A	0.4W	125°C	60 ~ 200	Si
2SA743A	−80V	−80V	−4V	1A	1A	750mW	150°C	40 ~ 320	Si
2SC381	40V	30V	4V	20mA	−20mA	100mW	125°C	40 ~ 80	Si
2SC458	30V	30V	5V	100mA	–	200mW	125°C	60 ~ 500	Si
2SC785R	40V	30V	4V	20mA	−20mA	100mW	125°C	40 ~ 80	Si
2SC941	35V	30V	4V	20mA	−20mA	200mW	125°C	40 ~ 140	Si
2SC945	50V	40V	5V	100mA	–	250mW	125°C	90 ~ 270	Si
2SC983	250V	150V	5V	50mA	−50mA	600mW	150°C	70 ~ 240	Si
2SC1000	55V	50V	5V	100mA	100mA	200mA	125°C	120 ~ 1200	Si
2SC1111	140V	80V	12V	6A	–	50W	150°C	30 ~ 60 50 ~ 100	Si
2SC1212A	90V	80V	4V	1A	–	750mW	150°C	60 ~ 120	Si
2SC1213A	55V	55V	4V	500mA	−500mA	400mW	125°C	60 ~ 200	Si
2SC1345	55V	50V	5V	100mA	−100mA	200mW	125°C	400 ~ 1200	Si
2SC1416A	55V	50V	5V	50mA	−50mA	200mW	150°C	200 ~ 700	Si
2SD220	80V	50V	7V	1A	−1A	500mW	–	70 ~ 400	Si

V_{CBO}	: Collector to base voltage	I_E	: Emitter current
V_{CEO}	: Collector to emitter voltage	P_C	: Maximum power disposition
V_{EBO}	: Emitter to base voltage	T_J	: Operating junction temperature
I_C	: Collector current	Si	: Silicon transistor

www.hifiengine.com

EXTERNAL VIEW

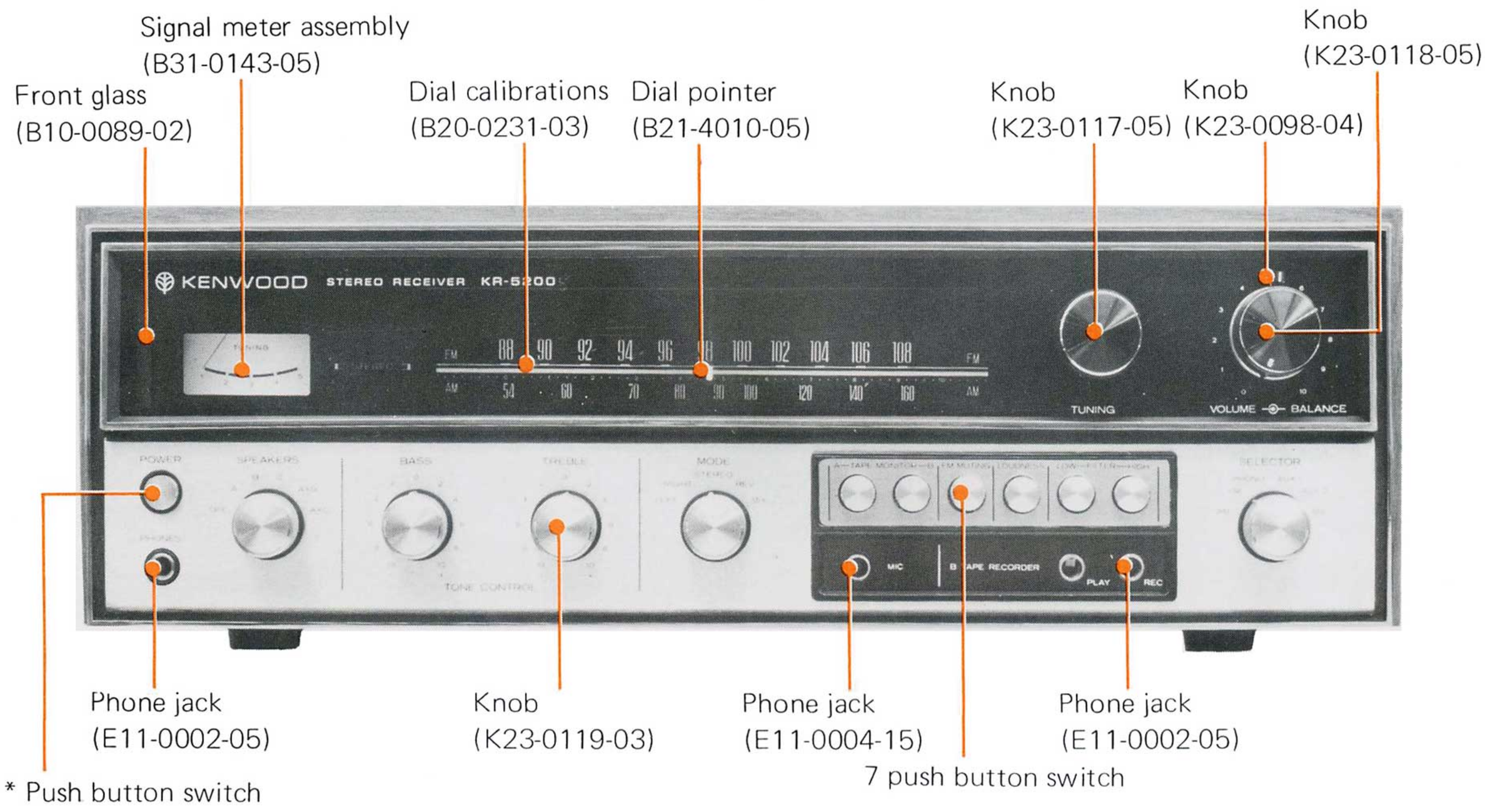

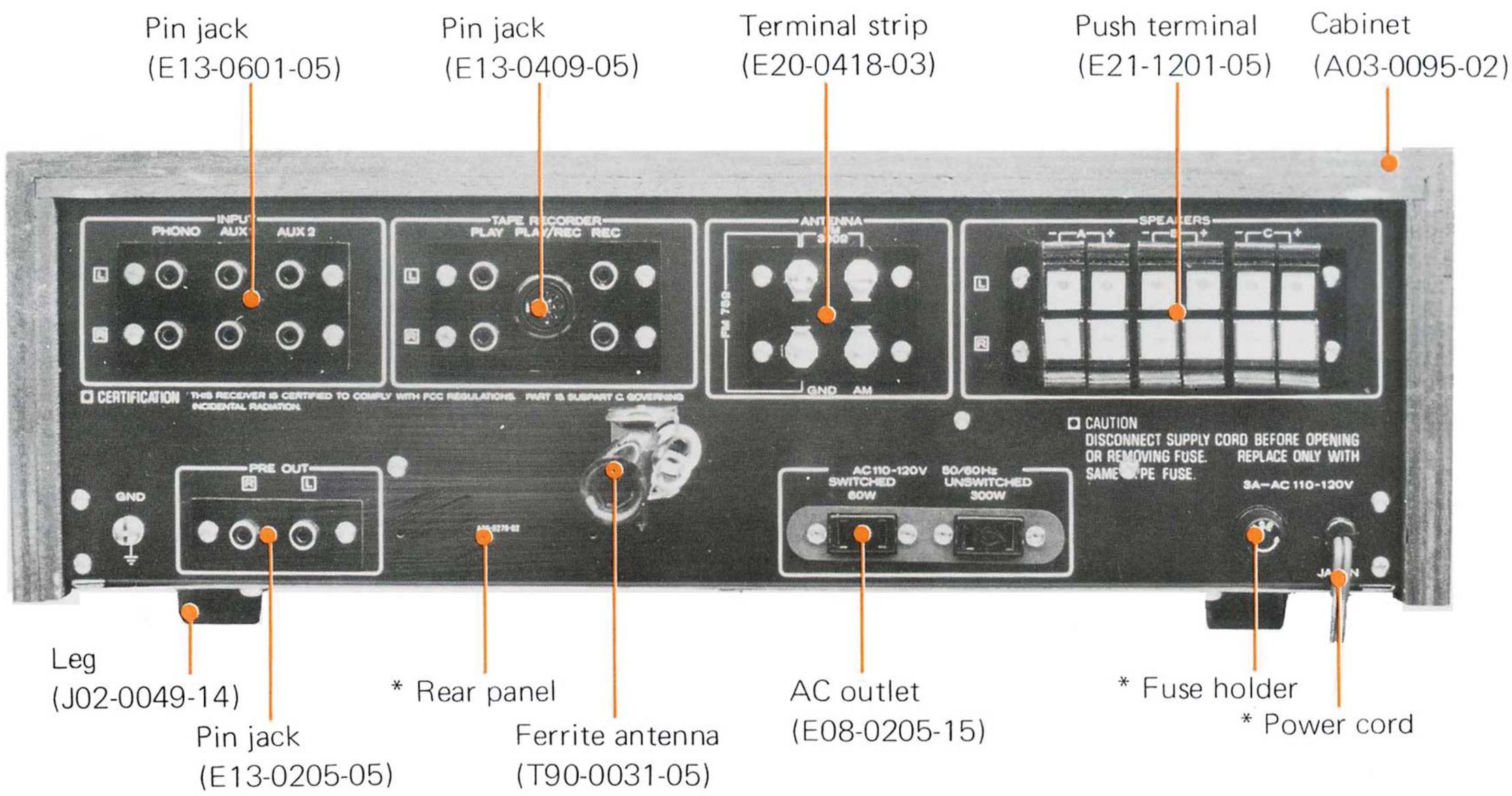

www.hifiengine.com

TOP & BOTTOM CHASSIS VIEW

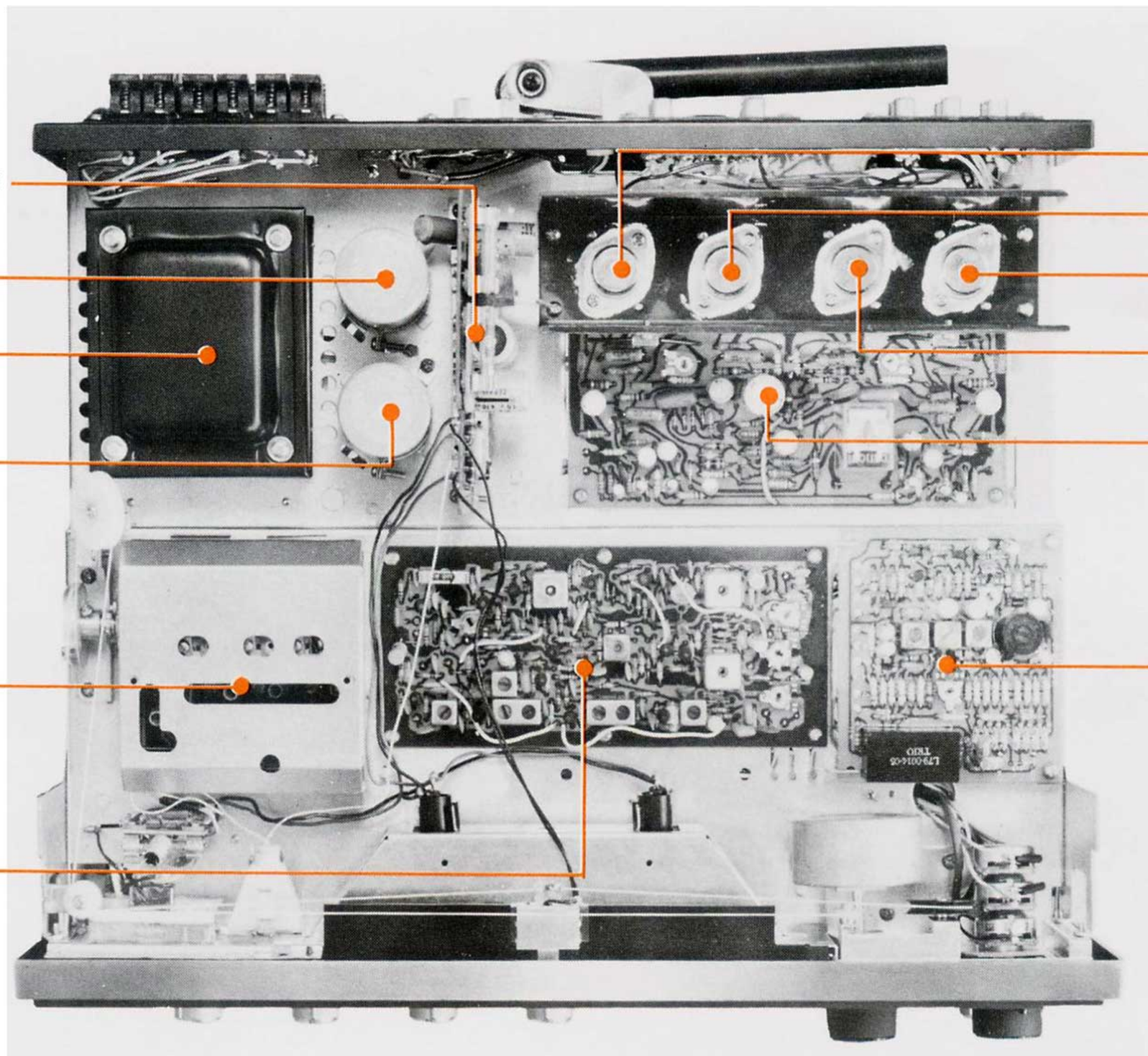

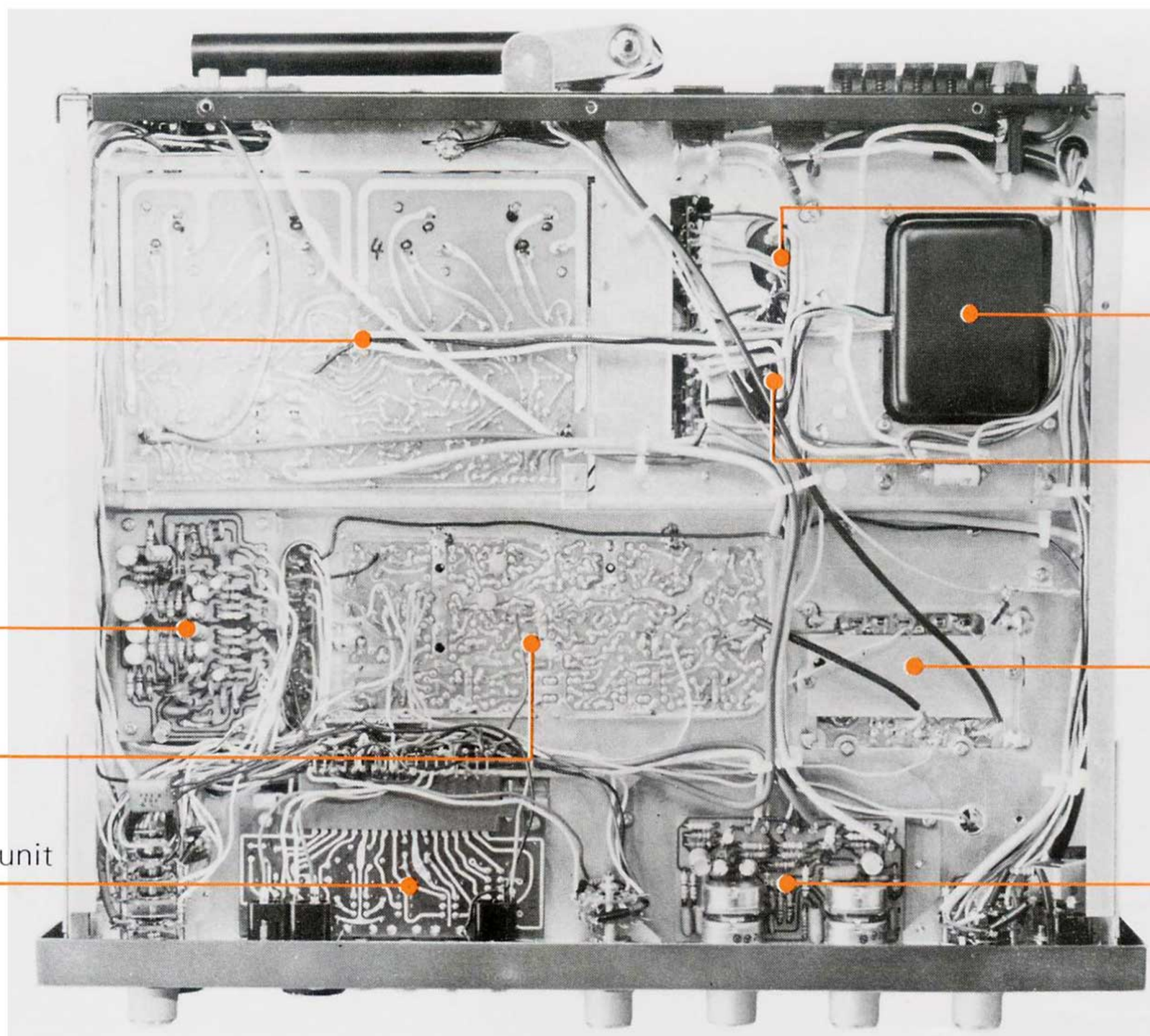

* Refer to the parts list.

www.hifiengine.com

PARTS LIST

Ref. No.	Parts No.	Description				Remarks
		CAPACITOR				
C100	CE04W0F221	Electrolytic	220μF	3.15WV		
C101	CQ93M1H224M	Mylar	0.22μF	±20%		
C120	CK45D1H561M	Ceramic	560pF	±20%		
C220	CK45D1H561M	Ceramic	560pF	±20%		
C300	C90-0029-05	Oil filled	0.01μF	+100%	−0%	
C301, 302	C90-0134-05	Electrolytic	4700μF	50WV		
		RESISTOR				
R110	PD14BY2E103J	Carbon	10kΩ	±5%	1/4W	
R120	PD14BY2E394J	Carbon	390kΩ	±5%	1/4W	
R121	PD14BY2E104J	Carbon	100kΩ	±5%	1/4W	
R122	PD14BY2E222J	Carbon	2.2kΩ	±5%	1/4W	
R123	PD14BY2E682J	Carbon	6.8kΩ	±5%	1/4W	
R124	PD14BY2E473J	Carbon	47kΩ	±5%	1/4W	
R170	RC05GF2H471K	Carbon	470Ω	±10%	1/2W	
R210	PD14BY2E103J	Carbon	10kΩ	±5%	1/4W	
R220	PD14BY2E394J	Carbon	390kΩ	±5%	1/4W	
R221	PD14BY2E104J	Carbon	100kΩ	±5%	1/4W	
R222	PD14BY2E222J	Carbon	2.2kΩ	±5%	1/4W	
R223	PD14BY2E682J	Carbon	6.8kΩ	±5%	1/4W	
R224	PD14BY2E473J	Carbon	47kΩ	±5%	1/4W	
R270	RC05GF2H471K	Carbon	470Ω	±10%	1/2W	
R300	RC05GF2H225K	Carbon	2.2MΩ	±10%	1/2W	
		POTENTIOMETER				
VR1	R11-9003-05	VOLUME	50kΩ (B)	3 gangs		
VR2	R11-9003-05	BALANCE	100kΩ (W)	3 gangs		
		SWITCH				
S1	S04-5014-05	Rotary (SELECTOR)				
S2	S04-2043-05	Rotary (MODE)				
S10	S04-2036-05	Rotary (SPEAKERS)				
		MISCELLANEOUS				
–	A03-0095-02	Cabinet				
–	A10-0312-01	Chassis				
–	A15-0018-02	Frame				
–	A15-0019-13	Frame assembly				
–	A20-0518-05	Panel				
–	A20-0521-03	Panel assembly				
–	A21-0094-02	Ornamental plate				
–	A30-0066-05	Dial board				
–	A40-0097-05	Bottom plate				
–	B07-0084-04	Black spacer				
–	B10-0089-02	Front glass				
–	B20-0231-03	Dial calibrations				
–	B21-4010-05	Dial pointer				
–	B30-0060-05	Pilot lamp (300mA) x 3				
–	B30-0064-05	Pilot lamp (50mA, stereo indicator)				
–	B30-0067-05	Meter pilot lamp				
–	B31-0143-05	Meter assembly				
–	B42-0009-04	Passed stickers				
–	B42-0352-14	Name plate (C)				

www.hifiengine.com

Ref. No.	Parts No.	Description	Remarks
–	B42-0353-14	Name plate (A)	
–	B52-0131-00	Schematic diagram	
–	D01-0009-05	Flywheel	
–	D15-0073-14	Middle size pulley x 2	
–	D15-0075-04	Small size pulley x 3	
–	D15-0104-04	Pulley	
–	D20-0092-05	Dial shaft	
–	E08-0205-15	AC outlet x 2	U.L.
–	E10-3601-05	36P PC board connector	
–	E11-0002-05	Phone jack (TAPE-REC, -PLAY, PHONE) x 3	
–	E11-0004-15	Phone jack (MIC)	
–	E13-0205-05	2P pin jack	
–	E13-0409-05	4P pin jack with DIN	
–	E13-0601-05	6P pin jack	
–	E15-0038-05	Pilot lamp socket x 3	
–	E20-0418-03	4P terminal strips	
–	E21-1201-05	12P push terminal (speaker)	
–	F07-0264-14	Dial cover	
–	G01-0045-04	Dial spring	
–	H01-0816-04	Carton case	
–	J02-0049-19	Leg x 4	
–	J19-0029-14	Front glass stopper	
–	J19-0250-14	Dial stopper	
–	J19-0251-14	Left side board	
–	J19-0252-34	Right side board	
–	J19-0266-04	Upper front glass stopper	
–	J19-0267-04	Lower front glass stopper	
–	J19-0276-04	Meter stopper	
–	J21-0192-04	Amp stopper	
–	J21-0480-13	Antenna mounting hardware	
–	J21-0972-04	MPX unit mounting hardware	
–	J21-0973-14	Pushbutton mounting hardware	
–	J21-0976-14	L shape mounting hardware	
–	J21-0977-04	Switch mounting hardware	
–	J21-0989-14	Pilot lamp mounting hardware	
–	J21-1001-04	Frame mounting hardware	
–	J21-1005-04	Pilot lamp mounting hardware	
–	J25-0768-04	DIN PC board	
–	K23-0098-04	Knob (BALANCE)	
–	K23-0117-03	Knob (TUNING)	
–	K23-0118-03	Knob (VOLUME)	
–	K23-0119-03	Knob (MODE, SELECTOR, TONE, SPEAKERS) x 5	
--	K29-0115-04	Knob (POWER)	
–	K29-0117-04	Knob (pushbutton) x 6	
T1	L19-0009-05	Balun transformer	
L1	L33-0025-05	Choke coil (1μH)	

www.hifiengine.com

Ref. No.	Parts No.	Description	Remarks
–	T90-0002-05	FM indoor antenna	
T2	T90-0031-05	Ferrite antenna	
–	X01-1030-10	FM-RF unit	
–	X02-1020-10	IF unit	
–	X04-1010-10	MPX unit	
–	X07-1100-00	MAIN AMP unit	
–	X08-1080-10	PRE AMP unit	
–	X11-1030-01	TONE AMP unit	
–	X13-1210-10	Pushbutton unit	
	In North America add to the following parts.		
–	A23-0279-02	Rear panel	
–	B40-0463-04	Model name plate – only U.S.A.	
–	B40-0622-04	Model name plate – only Canada	
–	B42-0359-04	UL caution sticker x 2	
–	B46-0002-00	Warranty card (light blue) – only U.S.A.	
–	B46-0021-00	Warranty card (light blue) – only Canada	
–	B50-0825-00	Instruction manual	
–	B58-0043-00	Carton case caution card	
–	E30-0046-05	Power cord	UL
–	F05-3021-05	Fuse (3A) – only U.S.A.	UL
–	F05-3022-05	Fuse (3A) – only Canada	
–	H03-0135-14	Carton case	
–	J13-0016-15	Fuse holder	UL
–	J20-0227-14	AC outlet mounting hardware	
–	L03-0066-05	Power transformer – only U.S.A.	
–	L05-0014-05	Power transformer – only Canada	
CR1	R90-0097-05	Spark killer – only U.S.A.	
S9	S39-2002-05	Pushbutton switch (POWER)	UL
–	X00-1170-10	Power supply unit	
	In other area, do . . .		
–	A23-0280-02	Rear panel	
–	B40-0646-04	Model name plate	
–	B46-0022-00	Warranty card (yellow)	
–	B46-0023-00	Warranty card (yellow)	
–	B50-0826-00	Instruction manual	
–	B58-0139-00	Power supply caution card	
–	B58-0144-00	Power voltage selector caution card	
–	B58-0146-00	Spare fuse caution card	
–	B59-0018-00	KENWOOD service stations' list	

www.hifiengine.com

Ref. No.	Parts No.	Description	Remarks
–	D32-0021-04	Switch stopper	
–	E30-0034-05	Power cord	
–	F05-2023-05	Fuse (2A)	
–	F05-3022-05	Fuse (3A)	
–	J13-0033-05	Fuse holder	
–	L03-0066-05	Power transformer	
CR1	R90-0097-05	Spark killer	
–	S31-2001-05	Slide switch (power voltage selector)	SEV
S9	S39-2003-05	Pushbutton switch (POWER)	
–	X00-1170-81	Power supply unit	

www.hifiengine.com

SCHEMATIC DIAGRAM (1)

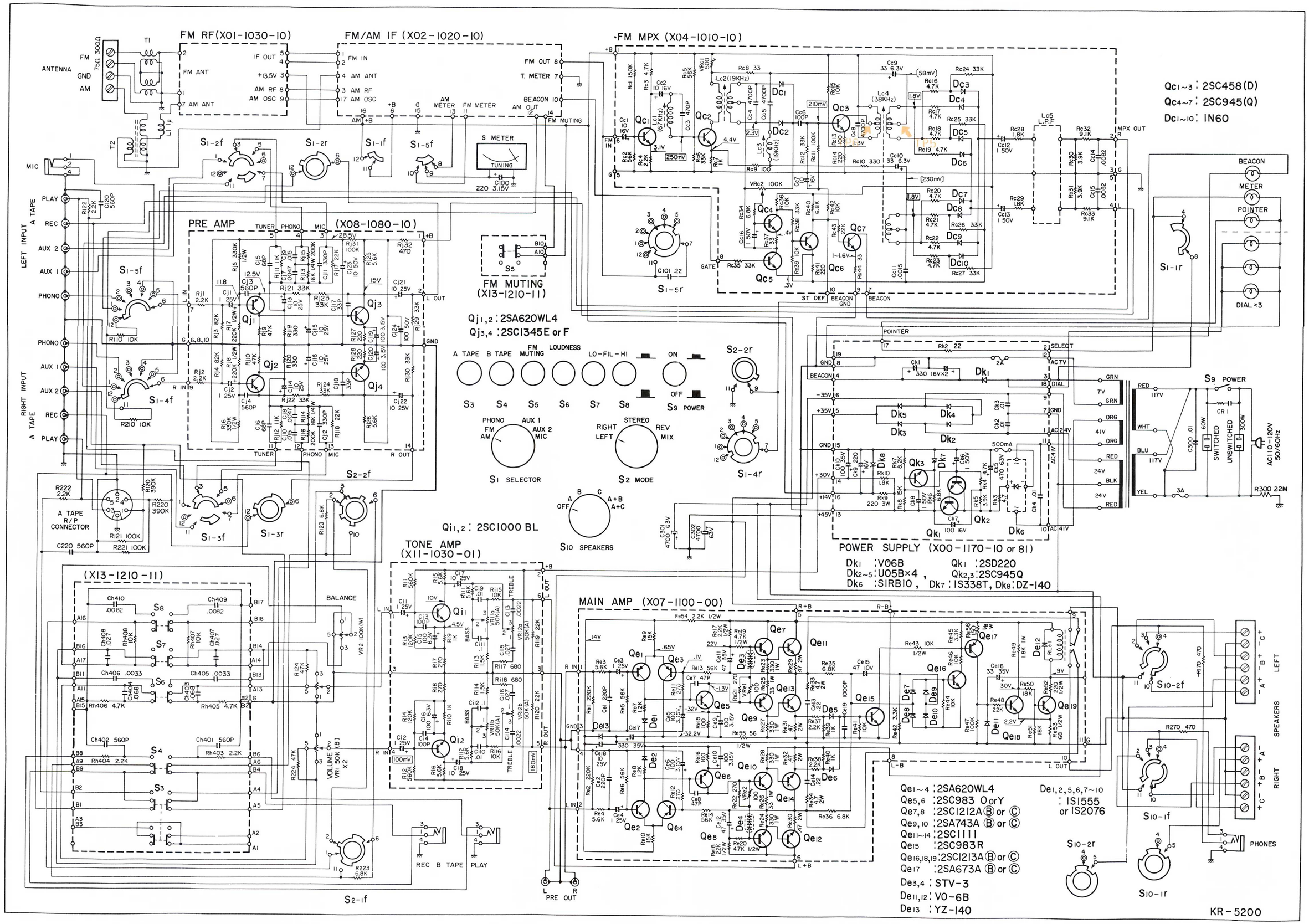

SCHEMATIC DIAGRAM (2)

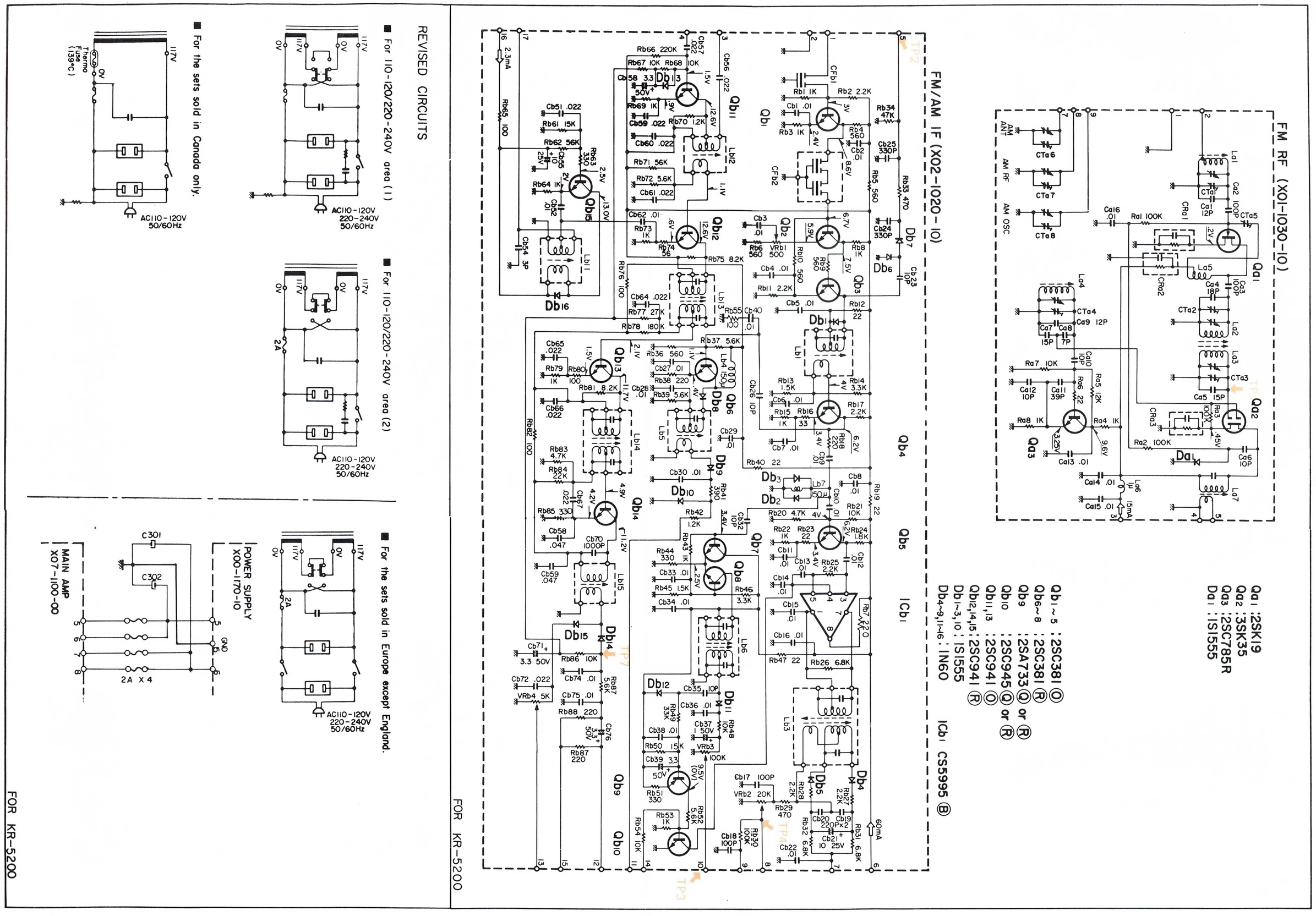

COLOR CODE

RESISTOR

COLOR (meaning)	1st (value)	2nd (value)	3rd (multiplier)	4th (tolerance)
Black	0	0	10^0	–
Brown	1	1	10^1	±1%
Red	2	2	10^2	±2%
Orange	3	3	10^3	–
Yellow	4	4	10^4	–
Green	5	5	10^5	–
Blue	6	6	10^6	–
Purple	7	7	10^7	–
Grey	8	8	10^8	–
White	9	9	10^9	–
Gold	–	–	10^{-1}	±5%
Silver	–	–	10^{-2}	±10%
Non-color	–	–	–	±20%

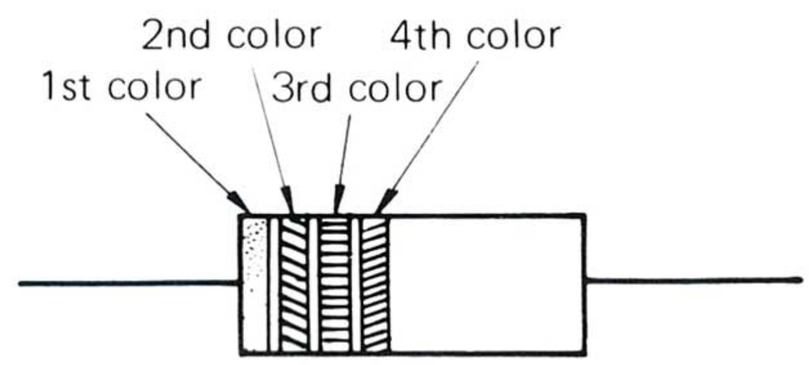

CAPACITOR (MICA)

COLOR (meaning)	1st (grade)	2nd (value)	3rd (value)	4th (multiplier)	5th (tolerance)	6th (characteristic)
Black	X	0	0	10^0	±20%	–
Brown	–	1	1	10^1	±1%	B
Red	Z	2	2	10^2	±2%	C
Orange	–	3	3	10^3	–	D
Yellow	–	4	4	10^4	–	E
Green	–	5	5	–	* ±5%	–
Blue	–	6	6	–	–	–
Purple	–	7	7	–	–	–
Grey	Y	8	8	–	–	–
White	–	9	9	0.1	±10%	–

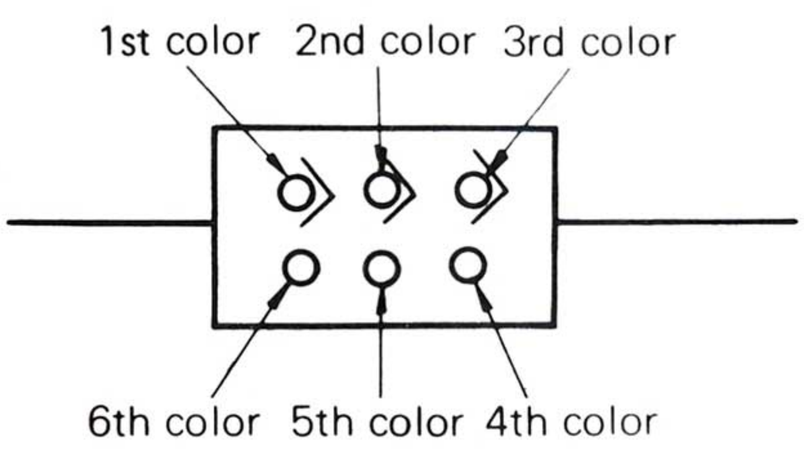

Unit = pF

* Capacitance being less than 10pF is ±0.5pF on tolerance.

www.hifiengine.com

CAUTION

In service manual of KR-series (KR-7200, KR-6200, KR-5200), correct the transistor figure of 2SA620WL to the below. And also in PREAMP (X08-1080-10) of service manual, correct 2SC620WL to 2SA620WL.

2SA620WL

Error

2SA620WL

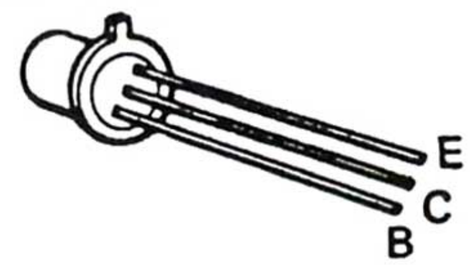

Correct

KENWOOD ELECTRONICS, INC
15777 So. Braodway
Gardena, California

23712 (T)

www.hifiengine.com

ADJUSTMENT OF AUDIO SECTION (KR-5200)

BIAS ADJUSTMENT

WHEN USING TESTER AS AMMETER

1. Set pc trimmer potentiometer (VRe1, 2) to its min.
2. Couple tester (as ammeter) to emitter resistor and negative power supply. (Refer to figure)
3. Adjust potentiometer so that tester reading is 30mA.
4. Check output waveform has not distortion.
5. If not, check main amp unit.

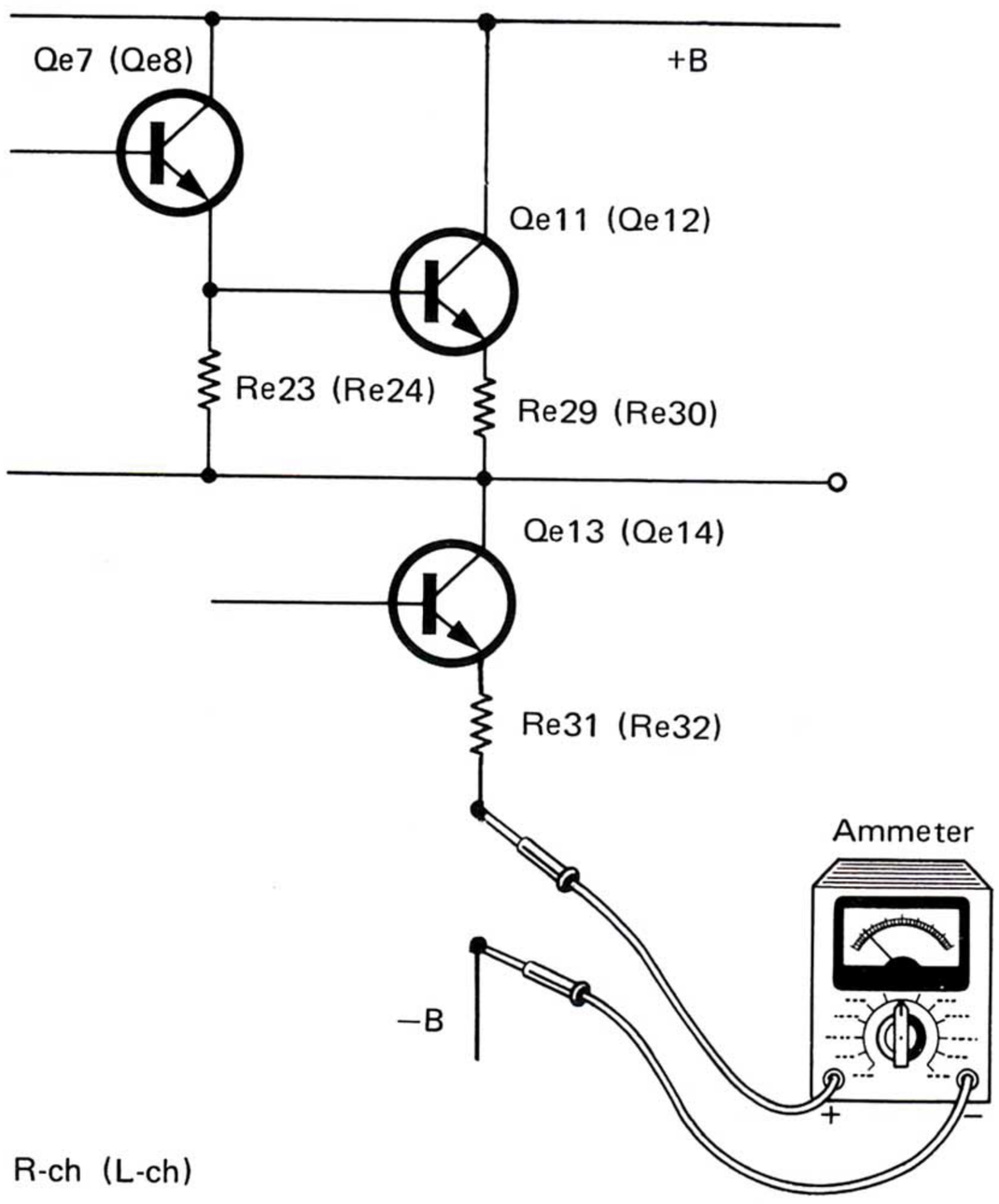

R-ch (L-ch)

© 1972-9 PRINTED IN JAPAN (T)

www.hifiengine.com

KENWOOD® POWER SUPPLY (X00-1170-10) SECTION

(KR-5200)

SCHEMATIC DIAGRAM

BOTTOM VIEW OF TRANSISTORS

2SD220

2SC945

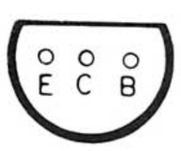

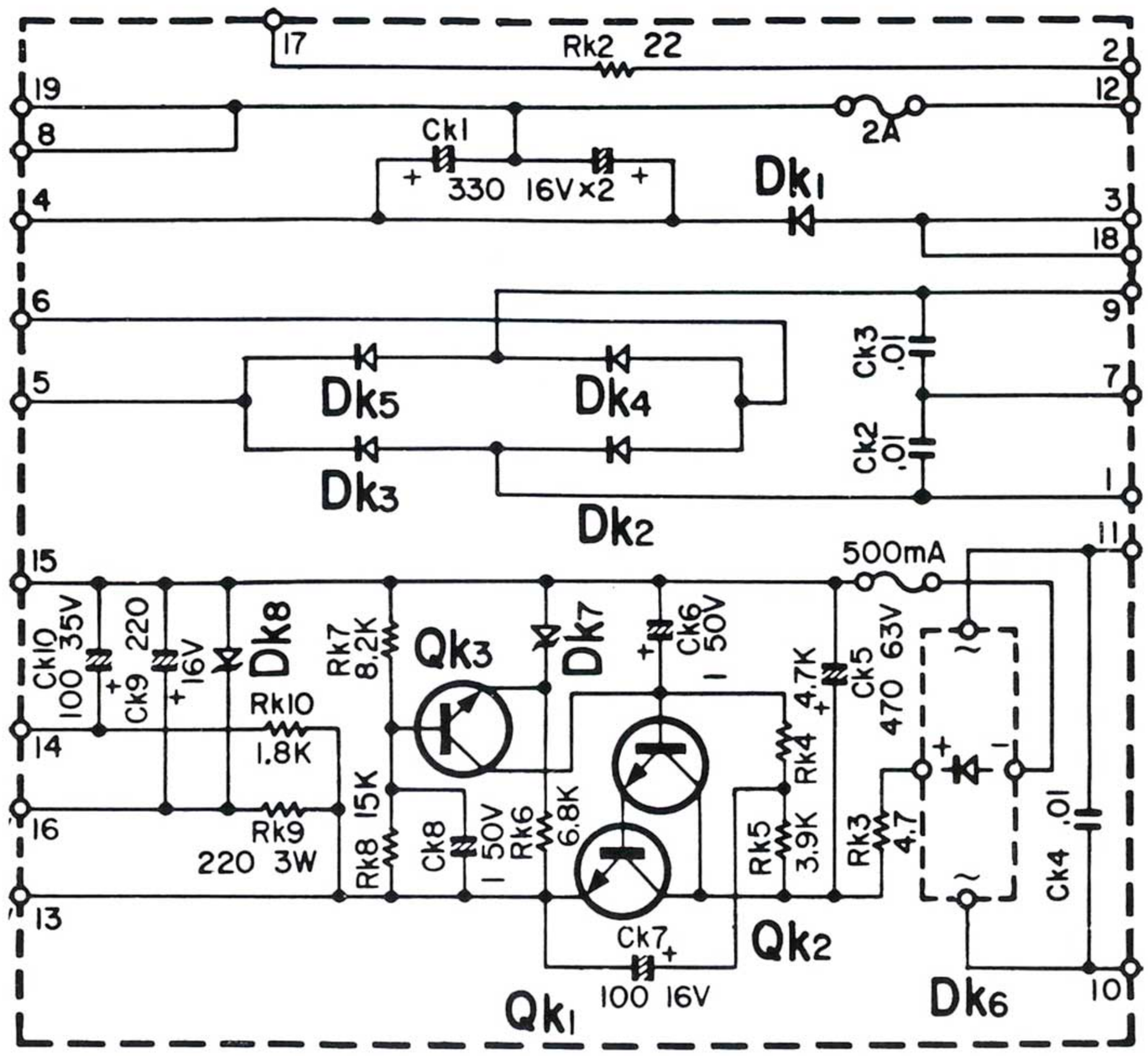

SEALED CIRCUIT ASSEMBLIES-PHANTOM VIEWS

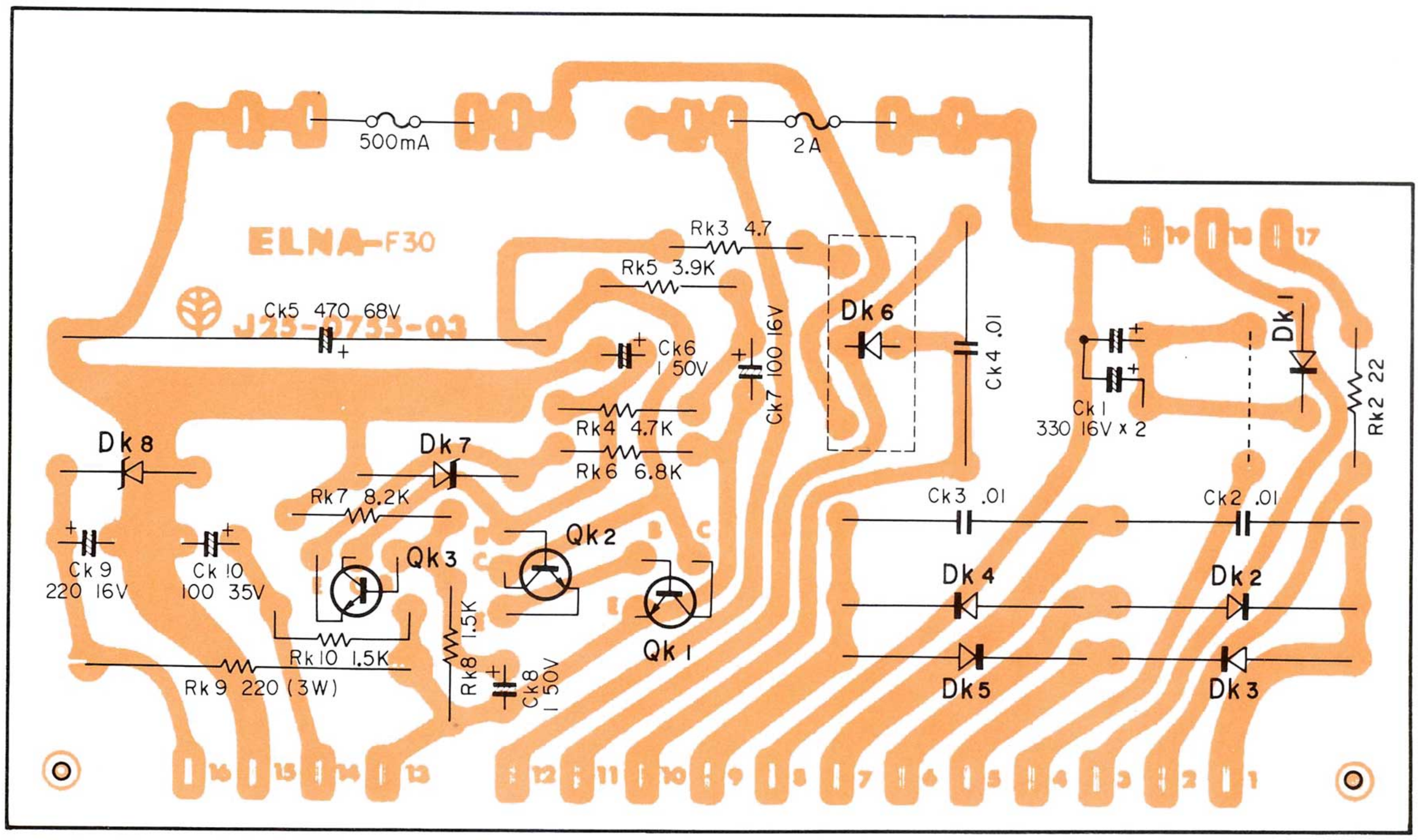

Qk1: 2SD220, Qk2, 3: 2SC945(Q), Dk1: V0-6B, Dk2 ~ 5: U05B, Dk6: S1RB10, Dk7: 1S338(T), Dk8: DZ-140

www.hifiengine.com

KENWOOD® POWER SUPPLY(X00-1170-10) SECTION

PARTS DESCRIPTION LIST

Ref. No.	Parts No.	Description				Remarks
CAPACITOR						
Ck1	CE04W1C331X2	Electrolytic	330μF x 2	16WV		
Ck2 ~4	CP02B2J103M	Oil filled	0.01μF	±20%		
Ck5	CE02W1J471	Electrolytic	470μF	63WV		
Ck6	CE04W1H010	Electrolytic	1μF	50WV		
Ck7	CE04W1C101	Electrolytic	100μF	16WV		
Ck8	CE04W1H010	Electrolytic	1μF	50WV		
Ck9	CE04W1C221	Electrolytic	220μF	16WV		
Ck10	CE04W1V101	Electrolytic	100μF	35WV		
RESISTOR						
Rk2	RC05GF2H220K	Carbon	22Ω	±10%	1/2W	
Rk3	RC05GF2H4R7K	Carbon	4.7Ω	±10%	1/2W	
Rk4	PD14BY2E472J	Carbon	4.7kΩ	±5%	1/4W	
Rk5	PD14BY2E392J	Carbon	3.9kΩ	±5%	1/4W	
Rk6	PD14BY2E682J	Carbon	6.8kΩ	±5%	1/4W	
Rk7	PD14BY2E822J	Carbon	8.2kΩ	±5%	1/4W	
Rk8	PD14BY2E153J	Carbon	15kΩ	±5%	1/4W	
Rk9	RN14AB3F221J	Metal film	220Ω	±5%	3W	
Rk10	RC05GF2H182K	Carbon	1.8kΩ	±10%	1/2W	
SEMICONDUCTOR						
Qk1		2SD220				
Qk2, 3		2SC945 (Q)				
Dk1		V0-6B				
Dk2 ~5		U05B				
Dk6		S1RB10				
Dk7		1S338 (T)				
Dk8		DZ-140				
MISCELLANEOUS						
—	F02-0007-05	Heat sink				
—	F05-5017-05	Fuse (0.5A)				UL
—	F06-2022-05	Fuse (2A)				UL
—	J21-1003-04	Left pc board stopper				
—	J21-1004-04	Right pc board stopper				

© 1972-5 PRINTED IN JAPAN (G)

www.hifiengine.com

KENWOOD® FM-RF (X01-1030-10) SECTION

(KR-6200) (KR-5200)

SCHEMATIC DIAGRAM

BOTTOM VIEW OF TRANSISTORS

2SK19

3SK35

2SC785R

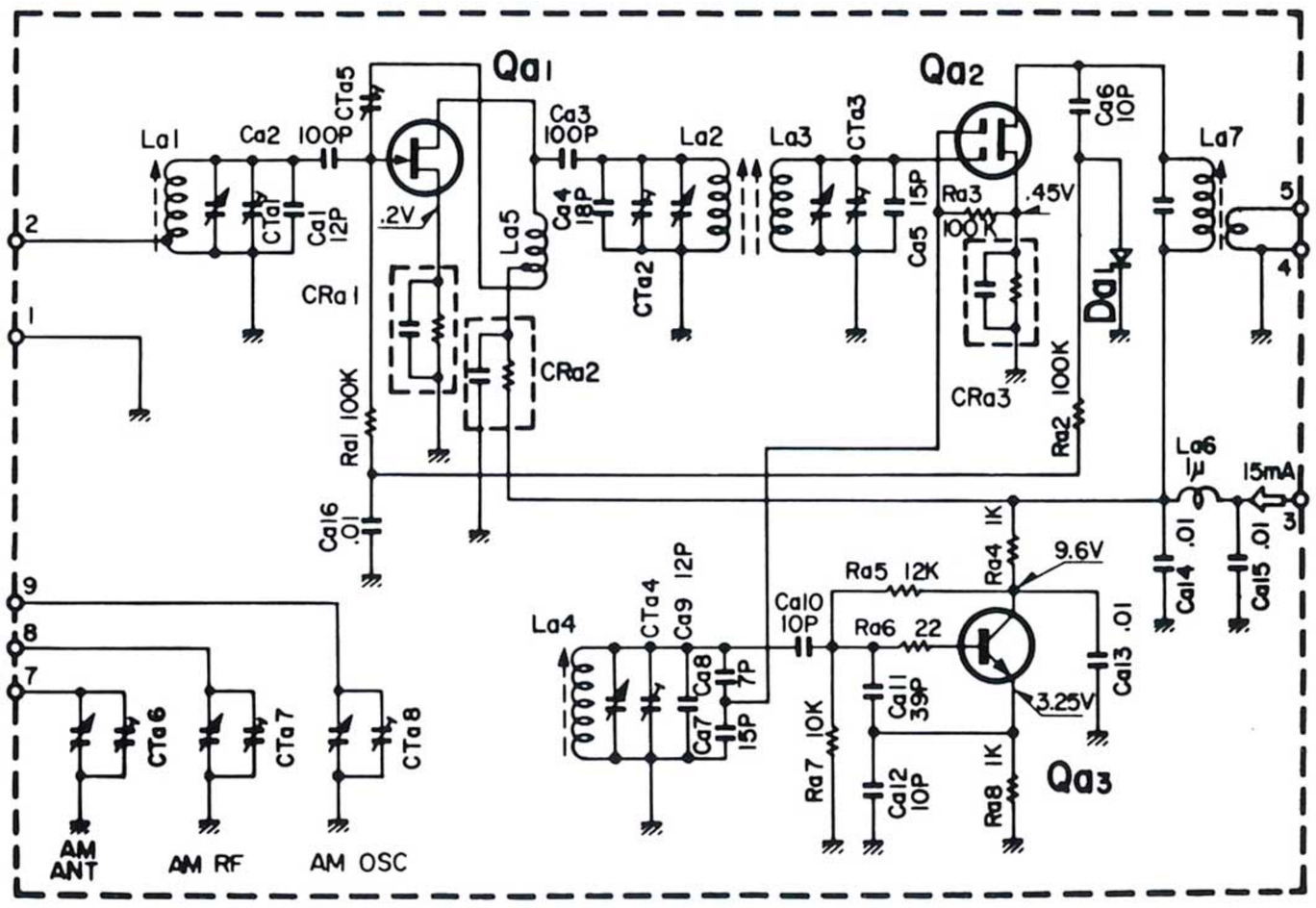

SEALED CIRCUIT ASSEMBLIES-PHANTOM VIEWS

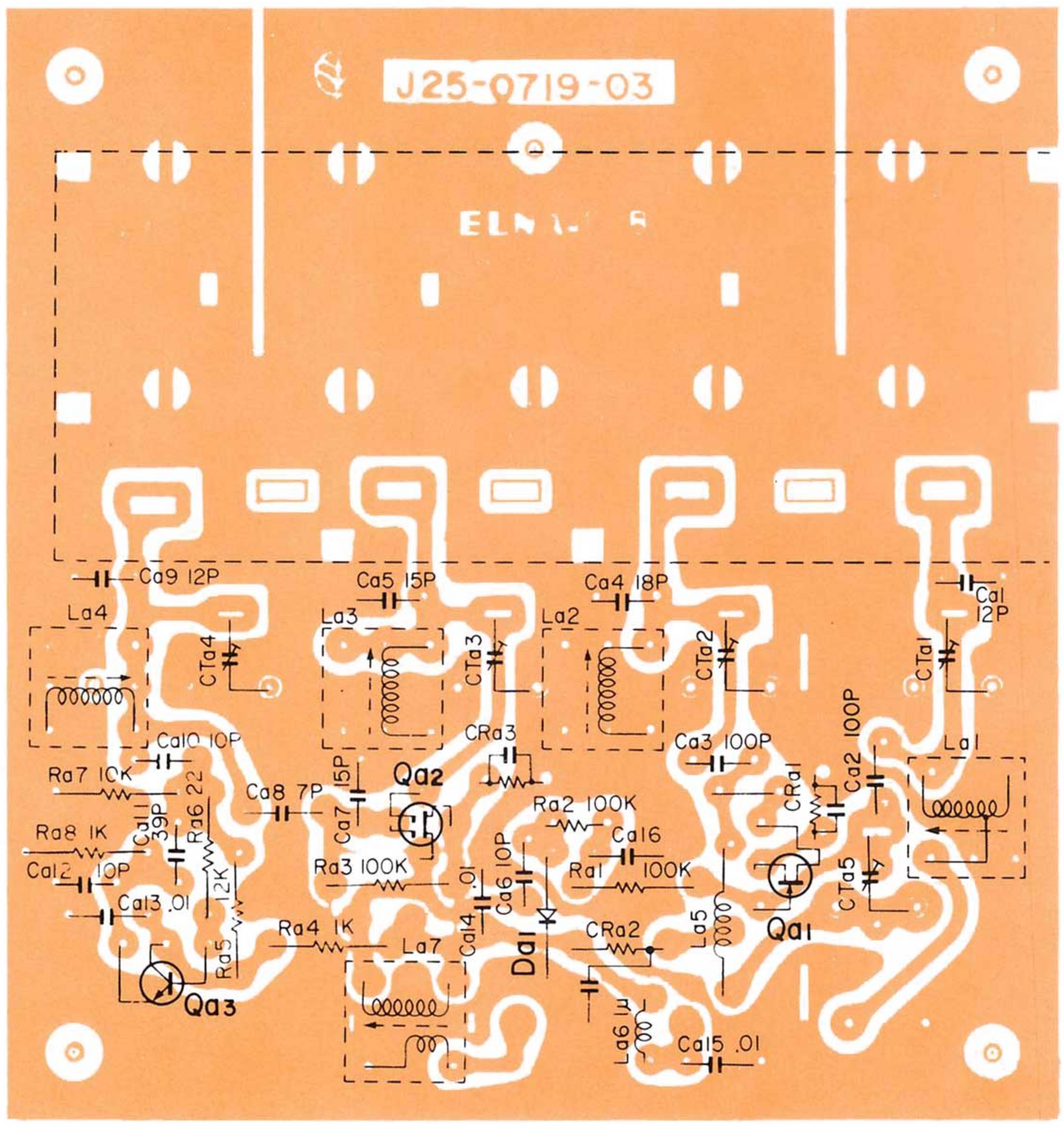

Qa1: 2SK19 (Low noise), Qa2: 3SK35, Qa3: 2SC785R, Da1: 1S1555

www.hifiengine.com

PARTS DESCRIPTION LIST

Ref. No.	Parts No.	Description				Remarks
		CAPACITOR				
Ca1	CC45SH1H120J	Ceramic	12pF	±5%		
Ca2, 3	CC45SL1H101K	Ceramic	100pF	±10%		
Ca4	CC45SH1H180J	Ceramic	18pF	±5%		
Ca5	CC45SH1H150J	Ceramic	15pF	±5%		
Ca6	CC45SL1H100J	Ceramic	10pF	±5%		
Ca7	CC45TH1H150J	Ceramic	15pF	±5%		
Ca8	CC45TH1H070C	Ceramic	7pF	±0.25pF		
Ca9	CC45SG1H120J	Ceramic	12pF	±5%		
Ca10	CC45SG1H100J	Ceramic	10pF	±5%		
Ca11	CC45SG1H390J	Ceramic	39pF	±5%		
Ca12	CC45SG1H100J	Ceramic	10pF	±5%		
Ca13 ~ 16	CK45F1H103Z	Ceramic	0.01μF	+80%, −20%		
		RESISTOR				
Ra1 ~ 3	PD14BY2B104J	Carbon	100kΩ	±5%	1/8W	
Ra4	PD14BY2B102J	Carbon	1kΩ	±5%	1/8W	
Ra5	PD14BY2B123J	Carbon	12kΩ	±5%	1/8W	
Ra6	PD14BY2B220J	Carbon	22Ω	±5%	1/8W	
Ra7	PD14BY2B103J	Carbon	10kΩ	±5%	1/8W	
		SEMICONDUCTOR				
Qa1		2SK19 (Low noise)				
Qa2		3SK35				
Qa3		2SC785R				
Da1		1S1555				
		TRANS./COIL				
La1	L34-0301-04	FM-ANT Coil				
La2	L34-0397-05	FM-RF1 Coil				
La3	L34-0398-05	FM-RF2 Coil				
La4	L34-0399-05	FM-OSC Coil				
La5	L33-0027-05	Choke coil				
La6	L33-0086-05	Choke coil				
La7	L30-0202-05	FM-IFT				
		MULTIPLE COMPONENT				
CRa1	R90-0070-05	Ceramic based multiple components (22Ω + 0.01μF)				
CRa2	R90-0071-05	Ceramic based multiple components (220Ω + 0.01μF)				
CRa3	R90-0096-05	Ceramic based multiple components (330Ω + 0.01μF)				
		MISCELLANEOUS				
–	A10-0304-03	Front end chassis				
–	A40-0096-04	Front end bottom plate				
VC	C01-0170-05	Variable capacitor				
CTa1 ~ 5	C05-0009-15	Ceramic trimmer				
–	F07-0251-03	Front end cover				
–	F07-0261-04	Front end chassis				
–	F10-0091-04	Front end shield plate				

©1972-5 PRINTED IN JAPAN (G)

www.hifiengine.com

KENWOOD AM & FM-IF (X02-1020-10) SECTION

(KR-7200) (KR-6200) (KR-5200) (KT-6005)

SCHEMATIC DIAGRAM

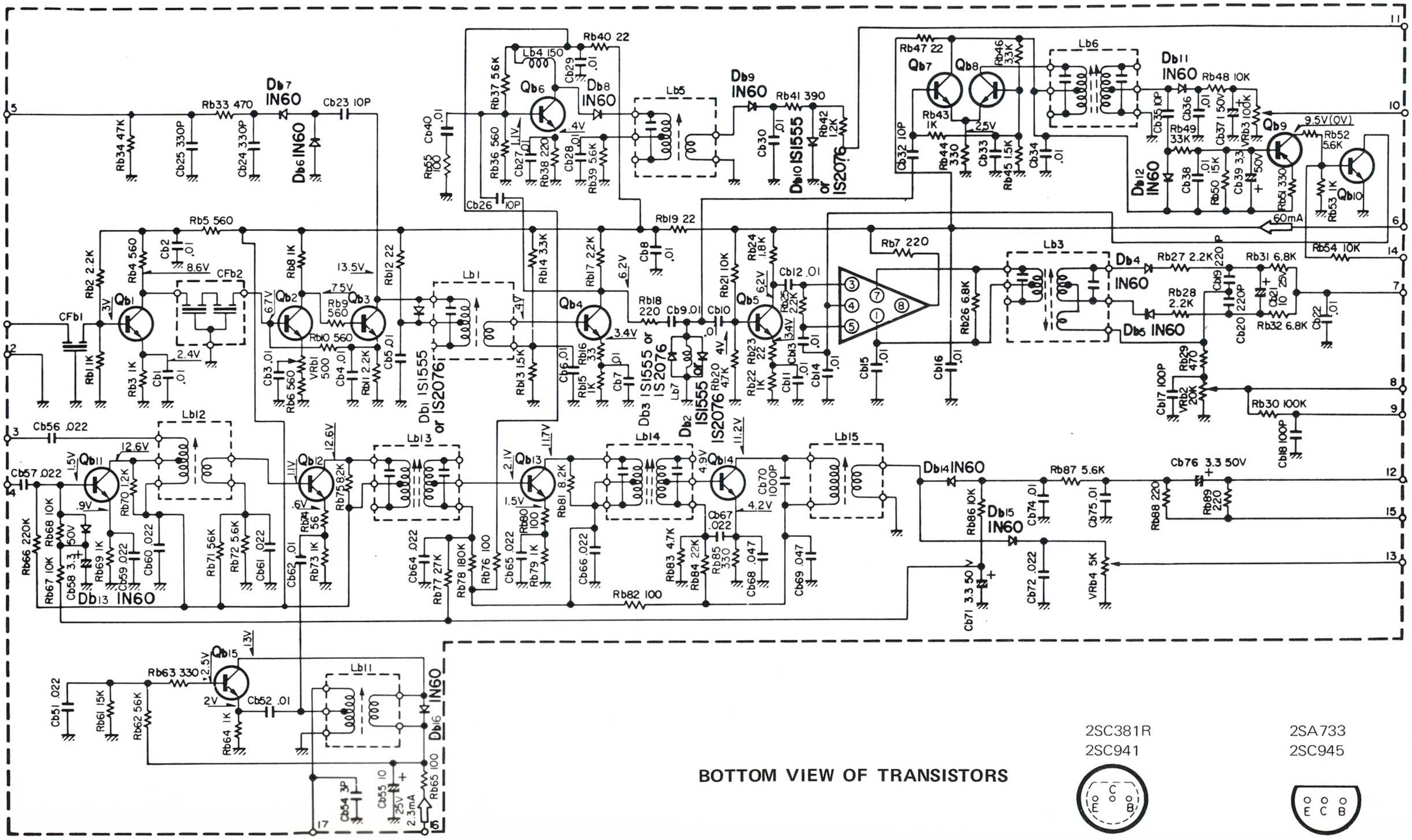

www.hifiengine.com

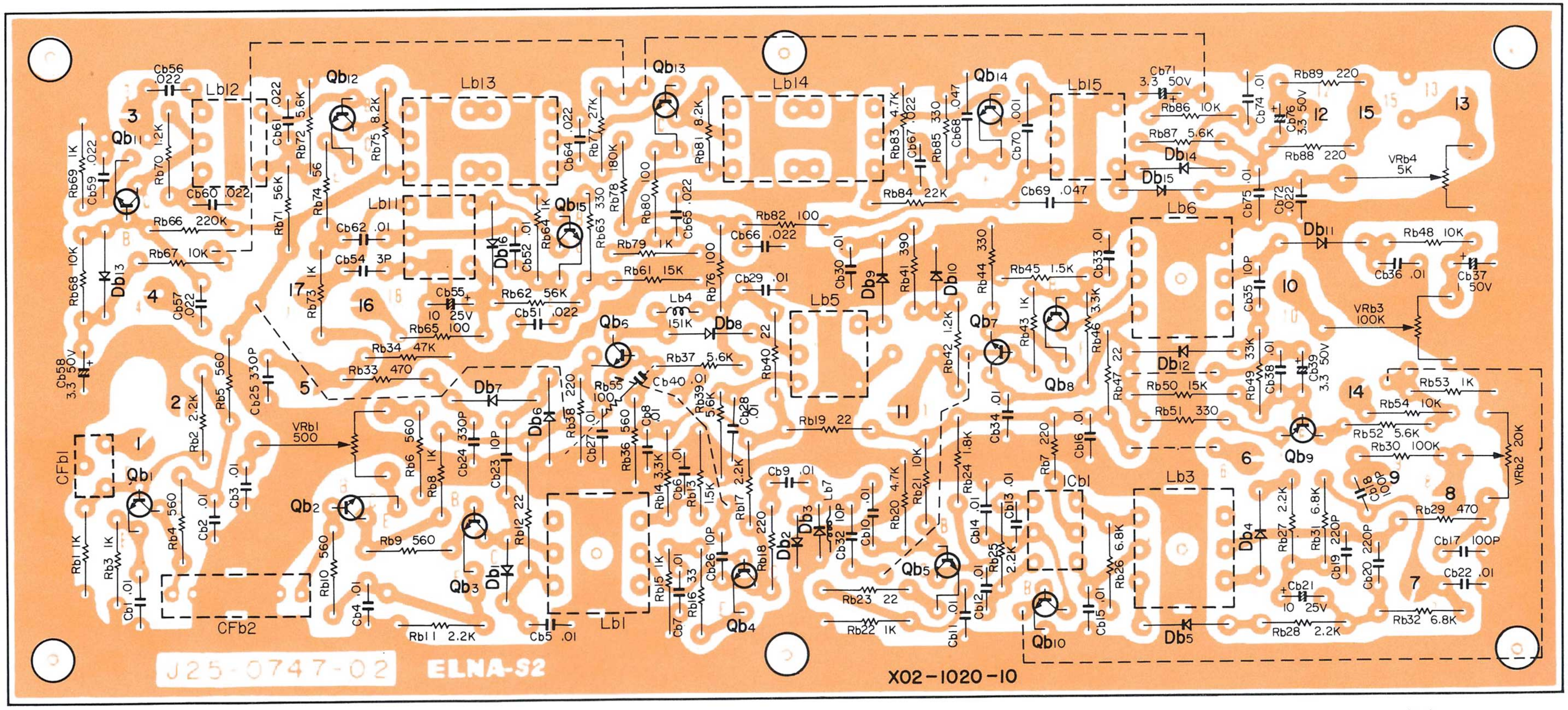

Qb1～5: 2SC381 (O), Qb6～8: 2SC381 (R), Qb9: 2SA733 (Q) or (R), Qb10: 2SC945 (Q) or (R), Qb11, 13: 2SC941 (O), Qb12, 14 15: 2SC941 (R), Db1, 2, 3, 10: 1S1555 or 1S2076, Db4～9, 11～16: 1N60, ICb1: CS5995 (B)

www.hifiengine.com

PARTS DESCRIPTION LIST

Ref. No.	Parts No.	Description					Re-marks
CAPACITOR							
Cb1~3	CK45F1H103Z	Ceramic	0.01μF	+80%, −20%			
Cb4	CQ93M1H103K	Mylar	0.01μF	±10%			
Cb5~16	CK45F1H103Z	Ceramic	0.01μF	+80%, −20%			
Cb17, 18	CC45SL1H101K	Ceramic	100pF	±10%			
Cb19, 20	CC45SL1H221K	Ceramic	220pF	±10%			
Cb21	CE04W1E100	Electrolytic	10μF	25WV			
Cb22	CK45F1H103Z	Ceramic	0.01μF	+80%, −20%			
Cb23	CC45SL1H100D	Ceramic	10pF	±0.5pF			
Cb24, 25	CC45SL1H331K	Ceramic	330pF	±10%			
Cb26	CC45SL1H100D	Ceramic	10pF	±0.5pF			
Cb27~30	CK45F1H103Z	Ceramic	0.01μF	+80%, −20%			
Cb32	CC45SL1H100D	Ceramic	10pF	±0.5pF			
Cb33, 34	CK45F1H103Z	Ceramic	0.01μF	+80%, −20%			
Cb35	CC45SL1H100D	Ceramic	10pF	±0.5pF			
Cb36	CK45F1H103Z	Ceramic	0.01μF	+80%, −20%			
Cb37	CE04W1H010	Electrolytic	1μF	50WV			
Cb38	CK45F1H103Z	Ceramic	0.01μF	+80%, −20%			
Cb39	CE04W1H3R3	Electrolytic	3.3μF	50WV			
Cb40	CK45F1H103Z	Ceramic	0.01μF	+80%, −20%			
Cb51	CK45F1H223Z	Ceramic	0.022μF	+80%, −20%			
Cb52	CQ93M1H103K	Mylar	0.01μF	±10%			
Cb54	CC45SL1H030C	Ceramic	3pF	±0.25pF			
Cb55	CE04W1E100	Electrolytic	10μF	25WV			
Cb56, 57	CK45F1H223Z	Ceramic	0.022μF	+80%, −20%			
Cb58	CE04W1H3R3	Electrolytic	3.3μF	50WV			
Cb59~61	CK45F1H223Z	Ceramic	0.022μF	+80%, −20%			
Cb62	CQ93M1H103K	Mylar	0.01μF	±10%			
Cb64~67	CK45F1H223Z	Ceramic	0.022μF	+80%, −20%			
Cb68, 69	CK45F1H473Z	Ceramic	0.047μF	+80%, −20%			
Cb70	CM93D1H102J(Z)	Mica	1000pF	±5%			
Cb71	CE04W1H3R3	Electrolytic	3.3μF	50WV			
Cb72	CK45F1H223Z	Ceramic	0.022μF	+80%, −20%			
Cb74, 75	CQ93M1H103K	Mylar	0.01μF	±10%			
Cb76	CE04W1H3R3	Electrolytic	3.3μF	50WV			
RESISTOR							
Rb1	PD14BY2B102J	Carbon	1kΩ	±5%	1/8W		
Rb2	PD14BY2B222J	Carbon	2.2kΩ	±5%	1/8W		
Rb3	PD14BY2B102J	Carbon	1kΩ	±5%	1/8W		
Rb4~6	PD14BY2B561J	Carbon	560Ω	±5%	1/8W		
Rb7	PD14BY2B221J	Carbon	220Ω	±5%	1/8W		
Rb8	PD14BY2B102J	Carbon	1kΩ	±5%	1/8W		
Rb9, 10	PD14BY2B561J	Carbon	560Ω	±5%	1/8W		
Rb11	PD14BY2B222J	Carbon	2.2kΩ	±5%	1/8W		
Rb12	PD14BY2B220J	Carbon	22Ω	±5%	1/8W		
Rb13	PD14BY2B152J	Carbon	1.5kΩ	±5%	1/8W		
Rb14	PD14BY2B332J	Carbon	3.3kΩ	±5%	1/8W		
Rb15	PD14BY2B102J	Carbon	1kΩ	±5%	1/8W		
Rb16	PD14BY2B330J	Carbon	33Ω	±5%	1/8W		
Rb17	PD14BY2B222J	Carbon	2.2kΩ	±5%	1/8W		
Rb18	PD14BY2B221J	Carbon	220Ω	±5%	1/8W		
Rb19	PD14BY2B220J	Carbon	22Ω	±5%	1/8W		
Rb20	PD14BY2B472J	Carbon	4.7kΩ	±5%	1/8W		
Rb21	PD14BY2B103J	Carbon	10kΩ	±5%	1/8W		
Rb22	PD14BY2B102J	Carbon	1kΩ	±5%	1/8W		
Rb23	PD14BY2B220J	Carbon	22Ω	±5%	1/8W		
Rb24	PD14BY2B182J	Carbon	1.8kΩ	±5%	1/8W		
Rb25	PD14BY2B222J	Carbon	2.2kΩ	±5%	1/8W		
Rb26	PD14BY2B682J	Carbon	6.8kΩ	±5%	1/8W		
Rb27, 28	PD14BY2B222J	Carbon	2.2kΩ	±5%	1/8W		
Rb29	PD14BY2B471J	Carbon	470Ω	±5%	1/8W		
Rb30	PD14BY2B104J	Carbon	100kΩ	±5%	1/8W		
Rb31, 32	PD14BY2B682J	Carbon	6.8kΩ	±5%	1/8W		
Rb33	PD14BY2B471J	Carbon	470Ω	±5%	1/8W		
Rb34	PD14BY2B473J	Carbon	47kΩ	±5%	1/8W		
Rb36	PD14BY2B561J	Carbon	560Ω	±5%	1/8W		
Rb37	PD14BY2B562J	Carbon	5.6kΩ	±5%	1/8W		
Rb38	PD14BY2B221J	Carbon	220Ω	±5%	1/8W		
Rb39	PD14BY2B562J	Carbon	5.6kΩ	±5%	1/8W		
Rb40	PD14BY2B220J	Carbon	22Ω	±5%	1/8W		
Rb41	PD14BY2B391J	Carbon	390Ω	±5%	1/8W		
Rb42	PD14BY2B122J	Carbon	1.2kΩ	±5%	1/8W		

Ref. No.	Parts No.	Description					Re-marks
Rb43	PD14BY2B102J	Carbon	1kΩ	±5%	1/8W		
Rb44	PD14BY2B331J	Carbon	330Ω	±5%	1/8W		
Rb45	PD14BY2B152J	Carbon	1.5kΩ	±5%	1/8W		
Rb46	PD14BY2B332J	Carbon	3.3kΩ	±5%	1/8W		
Rb47	PD14BY2B220J	Carbon	22Ω	±5%	1/8W		
Rb48	PD14BY2B103J	Carbon	10kΩ	±5%	1/8W		
Rb49	PD14BY2B333J	Carbon	33kΩ	±5%	1/8W		
Rb50	PD14BY2B153J	Carbon	15kΩ	±5%	1/8W		
Rb51	PD14BY2B331J	Carbon	330Ω	±5%	1/8W		
Rb52	PD14BY2B562J	Carbon	5.6kΩ	±5%	1/8W		
Rb53	PD14BY2B102J	Carbon	1kΩ	±5%	1/8W		
Rb54	PD14BY2B103J	Carbon	10kΩ	±5%	1/8W		
Rb55	PD14BY2B101J	Carbon	100Ω	±5%	1/8W		
Rb61	PD14BY2B153J	Carbon	15kΩ	±5%	1/8W		
Rb62	PD14BY2B563J	Carbon	56kΩ	±5%	1/8W		
Rb63	PD14BY2B331J	Carbon	330Ω	±5%	1/8W		
Rb64	PD14BY2B102J	Carbon	1kΩ	±5%	1/8W		
Rb65	PD14BY2B101J	Carbon	100Ω	±5%	1/8W		
Rb66	PD14BY2B224J	Carbon	220kΩ	±5%	1/8W		
Rb67, 68	PD14BY2B103J	Carbon	10kΩ	±5%	1/8W		
Rb69	PD14BY2B102J	Carbon	1kΩ	±5%	1/8W		
Rb70	PD14BY2B122J	Carbon	1.2kΩ	±5%	1/8W		
Rb71	PD14BY2B563J	Carbon	56kΩ	±5%	1/8W		
Rb72	PD14BY2B562J	Carbon	5.6kΩ	±5%	1/8W		
Rb73	PD14BY2B102J	Carbon	1kΩ	±5%	1/8W		
Rb74	PD14BY2B560J	Carbon	56Ω	±5%	1/8W		
Rb75	PD14BY2B822J	Carbon	8.2kΩ	±5%	1/8W		
Rb76	PD14BY2B101J	Carbon	100Ω	±5%	1/8W		
Rb77	PD14BY2B273J	Carbon	27kΩ	±5%	1/8W		
Rb78	PD14BY2B184J	Carbon	180kΩ	±5%	1/8W		
Rb79	PD14BY2B102J	Carbon	1kΩ	±5%	1/8W		
Rb80	PD14BY2B101J	Carbon	100Ω	±5%	1/8W		
Rb81	PD14BY2B822J	Carbon	8.2kΩ	±5%	1/8W		
Rb82	PD14BY2B101J	Carbon	100Ω	±5%	1/8W		
Rb83	PD14BY2B472J	Carbon	4.7kΩ	±5%	1/8W		
Rb84	PD14BY2B223J	Carbon	22kΩ	±5%	1/8W		
Rb85	PD14BY2B331J	Carbon	330Ω	±5%	1/8W		
Rb86	PD14BY2B103J	Carbon	10kΩ	±5%	1/8W		
Rb87	PD14BY2B562J	Carbon	5.6kΩ	±5%	1/8W		
Rb88, 89	PD14BY2B221J	Carbon	220Ω	±5%	1/8W		
SEMICONDUCTOR							
Qb1~5		2SC381 (O)					
Qb6~8		2SC381 (R)					
Qb9		2SA733 (Q) or (R)					
Qb10		2SC945 (Q) or (R)					
Qb11		2SC941 (O)					
Qb12		2SC941 (R)					
Qb13		2SC941 (O)					
Qb14, 15		2SC941 (R)					
Db1~3		1S1555 or 1S2076					
Db4~9		1N60					
Db10		1S1555 or 1S2076					
Db11~16		1N60					
ICb1		CS5995 (B)					
TRANS./COIL							
Lb1	L30-0243-05	FM-IFT					
Lb3	L30-0207-15	DISCRIMINATOR coil					
Lb4	L33-0098-05	Ferri-inductor (150μH)					
Lb5	L30-0246-05	Meter coil					
Lb6	L30-0244-05	Trigger coil					
Lb7	L33-0098-05	Ferri-inductor (150μH)					
Lb11	L32-0090-05	AM-OSC coil					
Lb12	L31-0111-05	AM-RF coil					
Lb13, 14	L30-0245-05	AM-IFT					
Lb15	L30-0052-05	AM-IFT					
POTENTIOMETER/FILTER							
VRb1	R12-0047-05	pc trimmer	500Ω	(B)	BIAS		
VRb2	R12-3014-05	pc trimmer	20kΩ	(B)	FM-OUT		
VRb3	R12-5019-05	pc trimmer	100kΩ	(B)	BEACON		
VRb4	R12-2016-05	pc trimmer	5kΩ	(B)	AM-METER		
CFb1	L72-0010-05	Ceramic filter					
CFb2	L72-0019-05	Ceramic filter					

© 1972-5 PRINTED IN JAPAN (G)

www.hifiengine.com

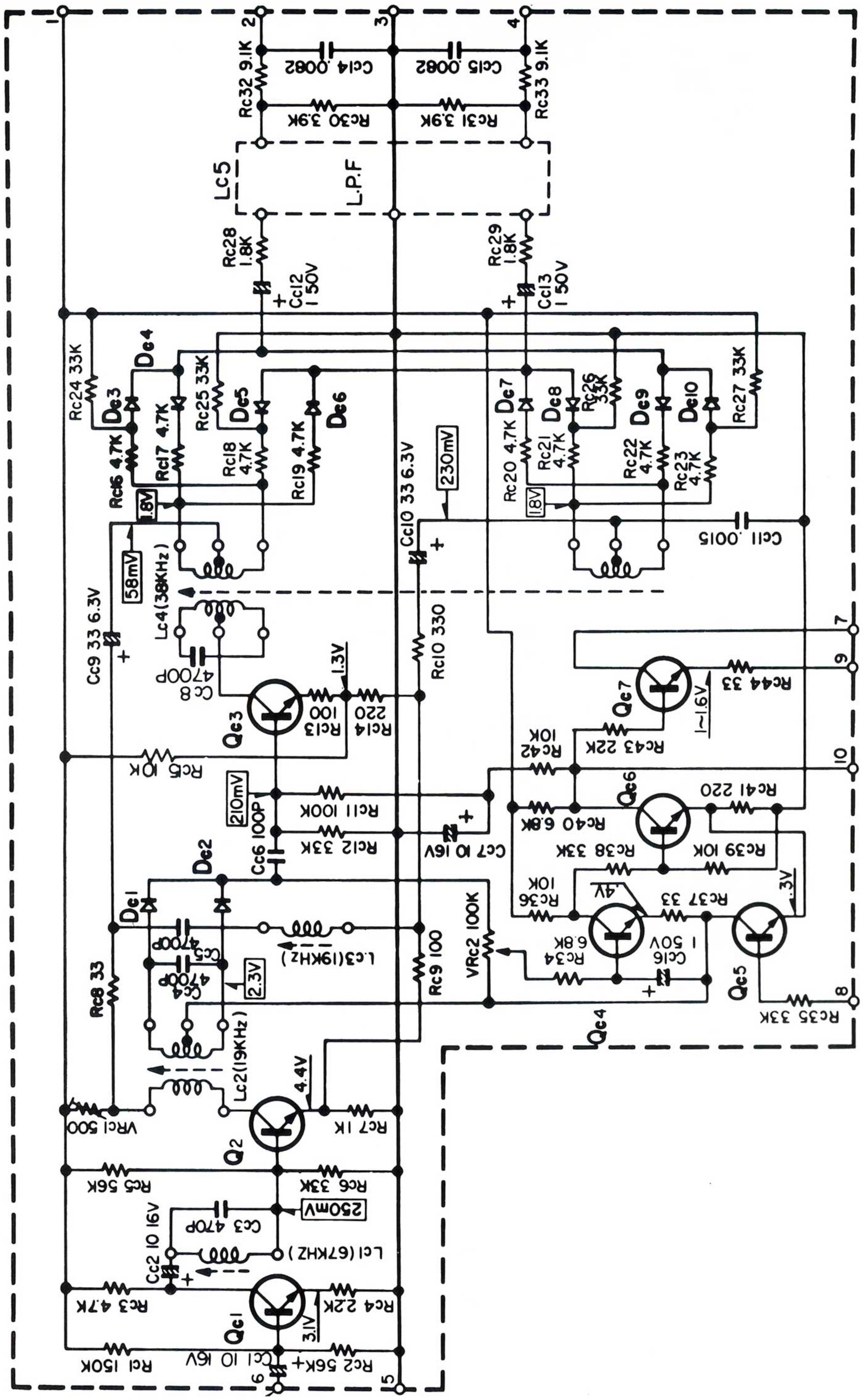

SCHEMATIC DIAGRAM

SEALED CIRCUIT ASSEMBLIES-PHANTOM VIEWS

BOTTOM VIEW OF TRANSISTOR

2SC945

2SC458

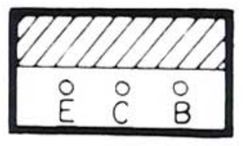

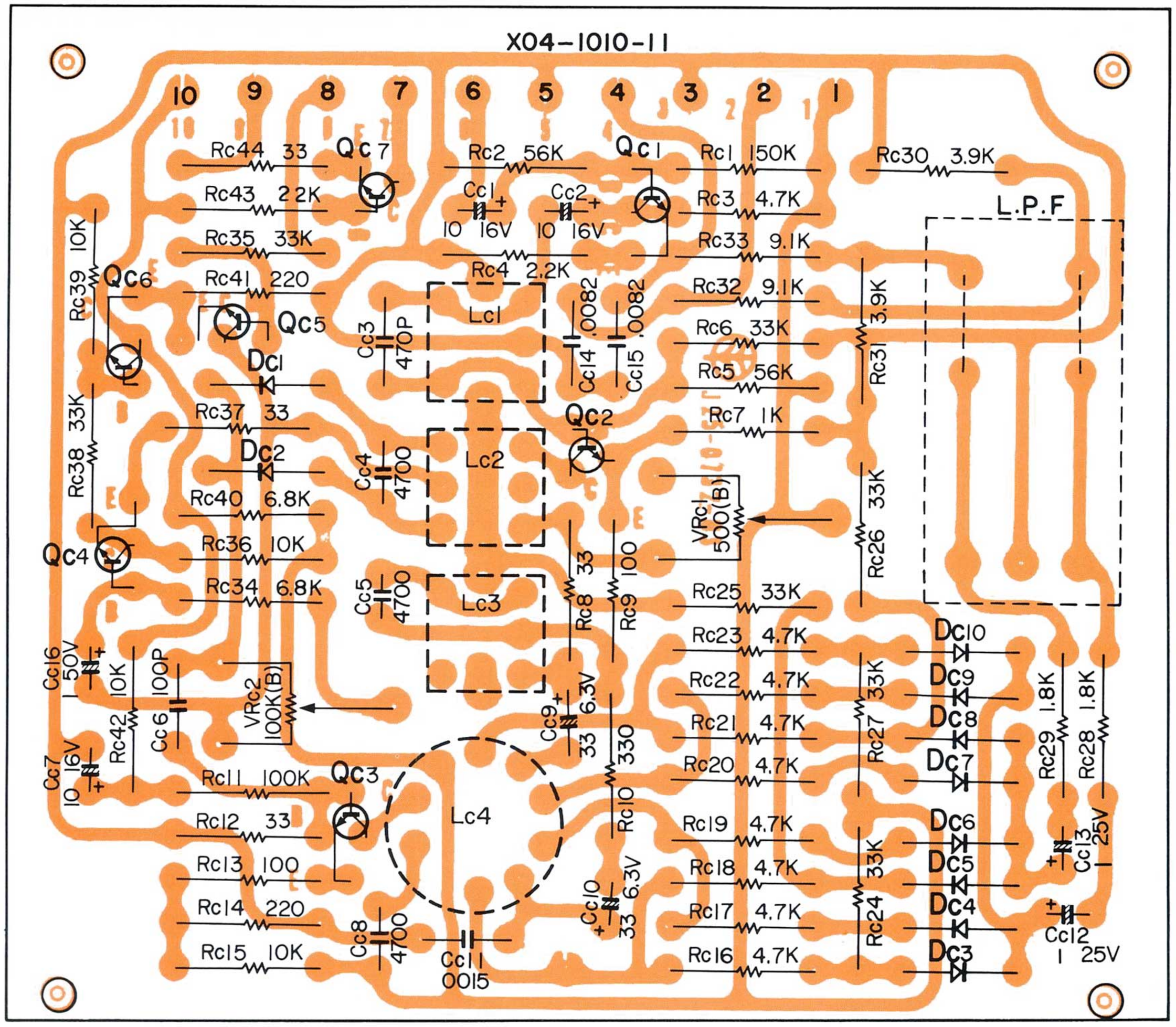

Qc1 ~ 3: 2SC458 (D), Qc4 ~ 7: 2SC945 (Q), Dc1 ~ 10: 1N60

www.hifiengine.com

PARTS DESCRIPTION LIST

Ref. No.	Parts No.	Description				Remarks
CAPACITOR						
Cc1, 2	CE04W1C100	Electrolytic	10μF	16WV		
Cc3	CQ08S2B471J	Polystyrene	470pF	±5%		
Cc4, 5	CQ09S1H472J(X)	Polystyrene	4700pF	±5%		
Cc6	CC45SL1H101K	Ceramic	100pF	±10%		
Cc7	CE04W1C100	Electrolytic	10μF	16WV		
Cc8	CQ09S1H472J(X)	Polystyrene	4700pF	±5%		
Cc9, 10	CE04W0J330	Electrolytic	33μF	6.3WV		
Cc11	CQ93M1H152J	Mylar	0.0015μF	±5%		
Cc12, 13	CE04W1H010	Electrolytic	1μF	50WV		
Cc14, 15	CQ93M1H822J	Mylar	0.0082μF	±5%		
Cc16	CE04W1H010	Electrolytic	1μF	50WV		
RESISTOR						
Rc1	PD14BY2E154J	Carbon	150kΩ	±5%	1/4W	
Rc2	PD14BY2E563J	Carbon	56kΩ	±5%	1/4W	
Rc3	PD14BY2E472J	Carbon	4.7kΩ	±5%	1/4W	
Rc4	PD14BY2E222J	Carbon	2.2kΩ	±5%	1/4W	
Rc5	PD14BY2E563J	Carbon	56kΩ	±5%	1/4W	
Rc6	PD14BY2E333J	Carbon	33kΩ	±5%	1/4W	
Rc7	PD14BY2E102J	Carbon	1kΩ	±5%	1/4W	
Rc8	PD14BY2E330J	Carbon	33Ω	±5%	1/4W	
Rc9	PD14BY2E101J	Carbon	100Ω	±5%	1/4W	
Rc10	PD14BY2E331J	Carbon	330Ω	±5%	1/4W	
Rc11	PD14BY2E104J	Carbon	100kΩ	±5%	1/4W	
Rc12	PD14BY2E333J	Carbon	33kΩ	±5%	1/4W	
Rc13	PD14BY2E101J	Carbon	100Ω	±5%	1/4W	
Rc14	PD14BY2E221J	Carbon	220Ω	±5%	1/4W	
Rc15	PD14BY2E103J	Carbon	10kΩ	±5%	1/4W	
Rc16 ~ 23	PD14BY2E472J	Carbon	4.7kΩ	±5%	1/4W	
Rc24 ~ 27	PD14BY2E333J	Carbon	33kΩ	±5%	1/4W	
Rc28, 29	PD14BY2E182J	Carbon	1.8kΩ	±5%	1/4W	
Rc30, 31	PD14BY2E392J	Carbon	3.9kΩ	±5%	1/4W	
Rc32, 33	PD14BY2E912J	Carbon	9.1kΩ	±5%	1/4W	
Rc34	PD14BY2E682J	Carbon	6.8kΩ	±5%	1/4W	
Rc35	PD14BY2E333J	Carbon	33kΩ	±5%	1/4W	
Rc36	PD14BY2E103J	Carbon	10kΩ	±5%	1/4W	
Rc37	PD14BY2E330J	Carbon	33Ω	±5%	1/4W	
Rc38	PD14BY2E333J	Carbon	33kΩ	±5%	1/4W	
Rc39	PD14BY2E103J	Carbon	10kΩ	±5%	1/4W	
Rc40	PD14BY2E682J	Carbon	6.8kΩ	±5%	1/4W	
Rc41	PD14BY2E221J	Carbon	220Ω	±5%	1/4W	
Rc42	PD14BY2E103J	Carbon	10kΩ	±5%	1/4W	
Rc43	PD14BY2E223J	Carbon	22kΩ	±5%	1/4W	
Rc44	PD14BY2E330J	Carbon	33Ω	±5%	1/4W	
SEMICONDUCTOR						
Qc1 ~ 3		2SC458 (D)				
Qc4 ~ 7		2SC945 (Q)				
Dc1 ~ 10		1N60				
COIL/FILTER						
Lc1	L35-0050-05	MPX coil				
Lc2	L35-0044-05	MPX coil				
Lc3	L35-0054-05	MPX coil				
Lc4	L35-0053-05	MPX coil				
Lc5	L79-0014-05	Low pass filter				
POTENTIOMETER						
VRc1	R12-0047-05	pc trimmer 500Ω (B) SEPARATION				
VRc2	R12-5019-05	pc trimmer 100kΩ (B)				

© 1972-5 PRINTED IN JAPAN (G)

www.hifiengine.com

KENWOOD

MAIN AMP (X07-1100-00) SECTION

(KR-5200)

SCHEMATIC DIAGRAM

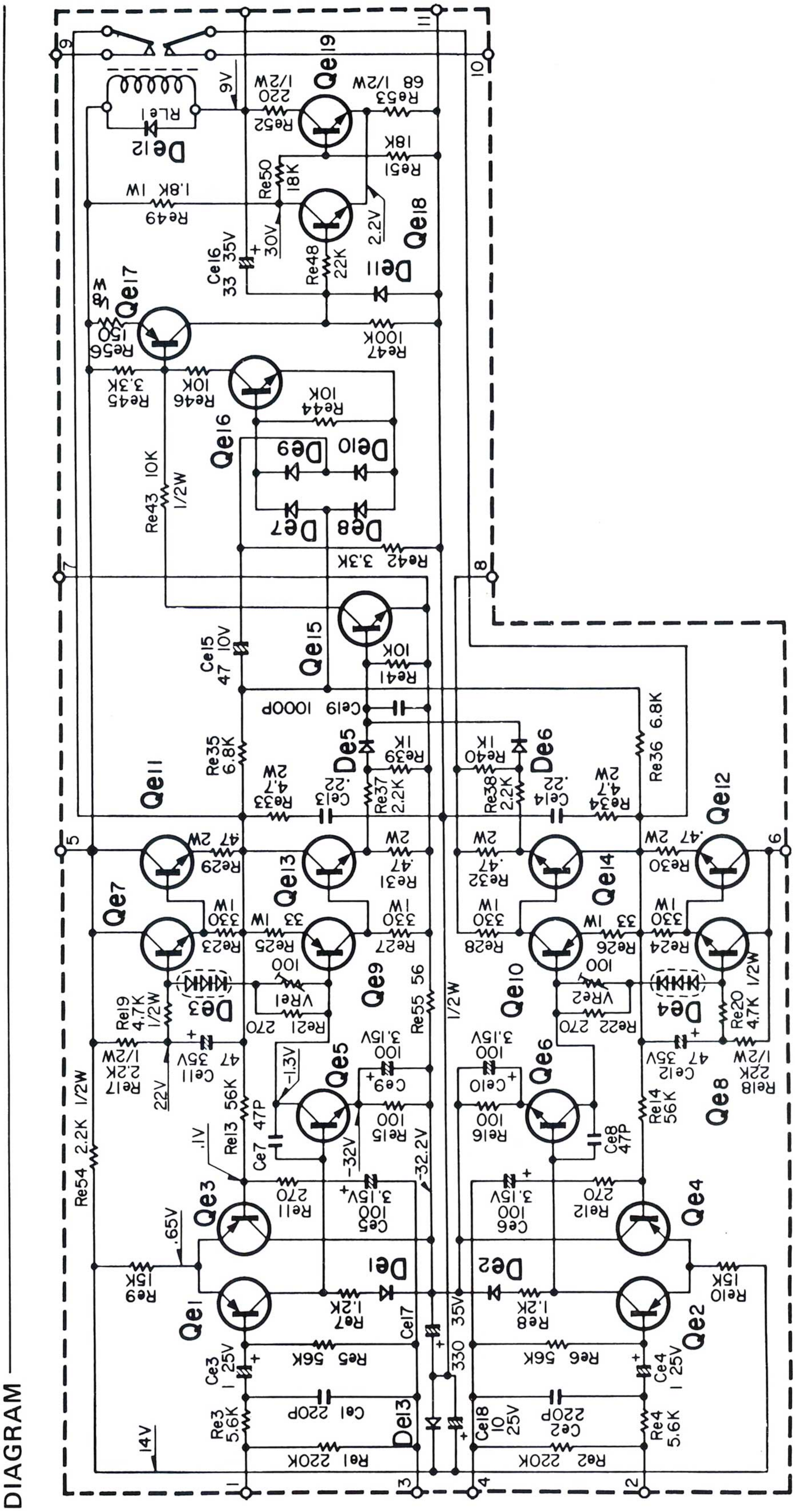

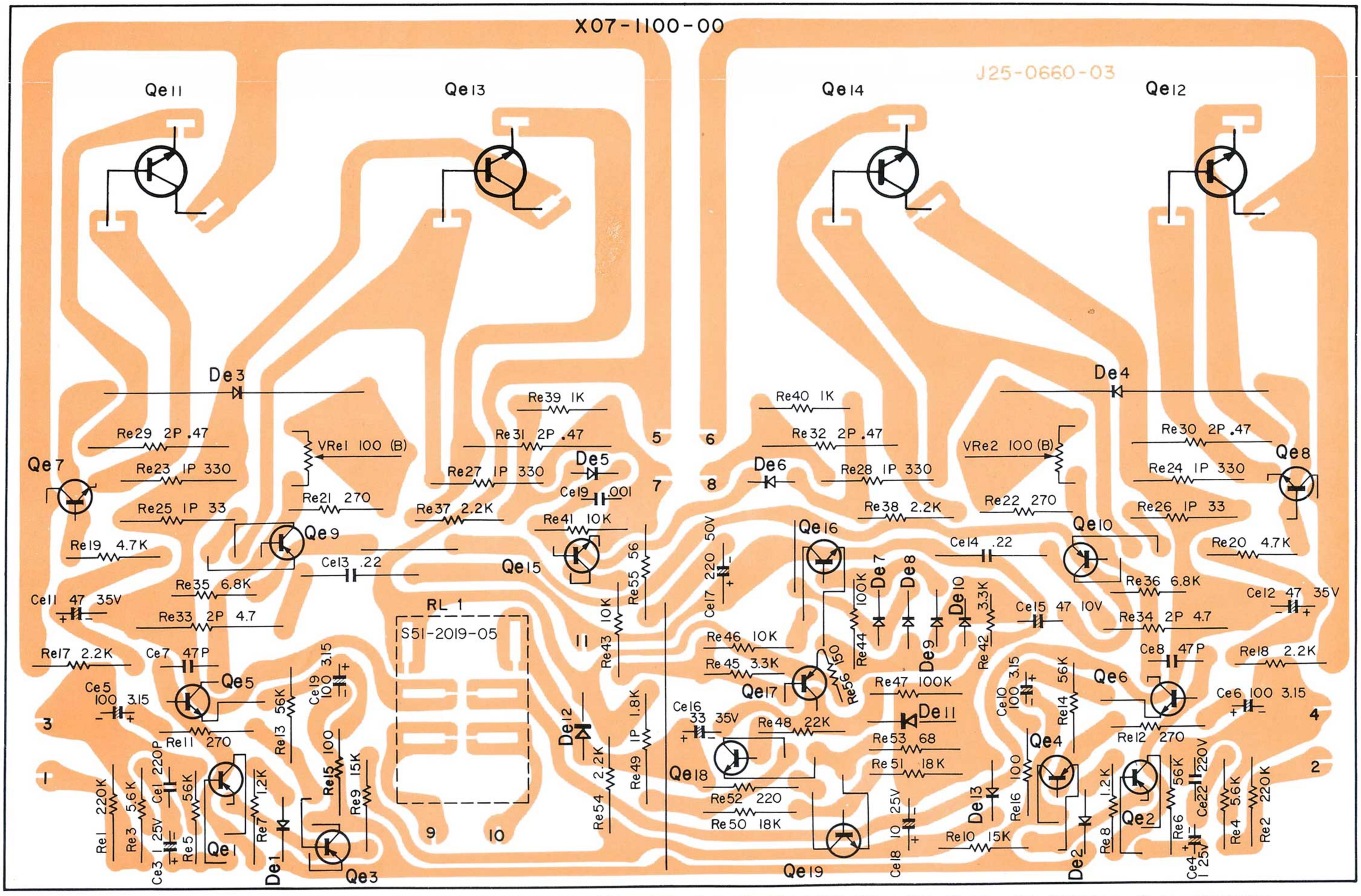

Qe1 ~ 4: 2SA620WL4, Qe5, 6: 2SC983 (O) or (Y), Qe7, 8: 2SC1212A (B) or (C), Qe9, 10: 2SA743A (B) or (C), Qe11,~ 14: 2SC1111, Qe15: 2SC983R, Qe16: 2SC1213A (B) or (C), Qe17: 2SA673A (B) or (C), Qe18, 19: 2SA1213A (B) or (C), De1, 2: 1S1555 or 1S2076, De3, 4: STV-3, De5 ~ 10: 1S1555 or 1S2076, De11, 12: V0-6B, De13: YZ-140

2SA620WL

2SA743
2SC1212A

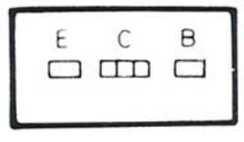

2SC1111

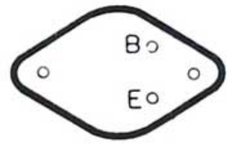

2SA673

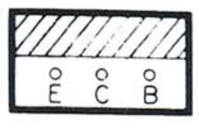

www.hifiengine.com

PARTS DESCRIPTION LIST

Ref. No.	Parts No.	Description				Remarks
		CAPACITOR				
Ce1, 2	CC45SL1H221K	Ceramic	220pF	±10%		
Ce3, 4	CS04E1E010X or M	Tantalum	1μF	25WV		
Ce5, 6	CE04W0F101	Electrolytic	100μF	3.15WV		
Ce7, 8	CC45SL1H470K	Ceramic	47pF	±10%		
Ce9, 10	CE04W0F101	Electrolytic	100μF	3.15WV		
Ce11, 12	CE04W1V470	Electrolytic	47μF	35WV		
Ce13, 14	CQ93M1H224M	Mylar	0.22μF	±20%		
Ce15	CE04W1A470(NP)	Electrolytic	47μF	10WV		
Ce16	CE04W1V330M	Electrolytic	33μF	35WV		
Ce17	CE04W1V331	Electrolytic	330μF	35WV		
Ce18	CE04W1E100	Electrolytic	10μF	25WV		
Ce19	CK45D1H102M	Ceramic	0.001μF	±20%		
		RESISTOR				
Re1, 2	PD14BY2E224J	Carbon	220kΩ	±5%	1/4W	
Re3, 4	PD14BY2E562J	Carbon	5.6kΩ	±5%	1/4W	
Re5, 6	PD14BY2E563J	Carbon	56kΩ	±5%	1/4W	
Re7, 8	PD14BY2E122J	Carbon	1.2kΩ	±5%	1/4W	
Re9, 10	PD14BY2E153J	Carbon	15kΩ	±5%	1/4W	
Re11, 12	PD14BY2E271J	Carbon	270Ω	±5%	1/4W	
Re13, 14	PD14BY2E563J	Carbon	56kΩ	±5%	1/4W	
Re15, 16	PD14BY2E101J	Carbon	100Ω	±5%	1/4W	
Re17, 18	RC05GF2H222K	Carbon	2.2kΩ	±10%	1/2W	
Re19, 20	RC05GF2H472K	Carbon	4.7kΩ	±10%	1/2W	
Re21, 22	PD14BY2E271J	Carbon	270Ω	±5%	1/4W	
Re23, 24	RN14AB3A331K	Metal film	330Ω	±10%	1W	
Re25, 26	RN14AB3A330K	Metal film	33Ω	±10%	1W	
Re27, 28	RN14AB3A331K	Metal film	330Ω	±10%	1W	
Re29 ~ 31	RN14AB3DR47K	Metal film	0.47Ω	±10%	2W	
Re33, 34	RN14AB3D4R7K	Metal film	4.7Ω	±10%	2W	
Re35, 36	PD14BY2E682J	Carbon	6.8kΩ	±5%	1/4W	
Re37, 38	PD14BY2E222J	Carbon	2.2kΩ	±5%	1/4W	
Re39, 40	PD14BY2E102J	Carbon	1kΩ	±5%	1/4W	
Re41	PD14BY2E103J	Carbon	10kΩ	±5%	1/4W	
Re42	PD14CY2E332J	Carbon	3.3kΩ	±5%	1/4W	
Re43	RC05GF2H103K	Carbon	10kΩ	±10%	1/2W	
Re44	PD14BY2E103J	Carbon	10kΩ	±5%	1/4W	
Re45	PD14BY2E332J	Carbon	33kΩ	±5%	1/4W	
Re46	PD14BY2E103J	Carbon	10kΩ	±5%	1/4W	
Re47	PD14BY2E104J	Carbon	100kΩ	±5%	1/4W	
Re48	PD14BY2E223J	Carbon	22kΩ	±5%	1/4W	
Re49	RN14AB3A182K	Metai film	1.8kΩ	±10%	1W	
Re50, 51	PD14BY2E183J	Carbon	18kΩ	±5%	1/4W	
Re52	RC05GF2H221K	Carbon	220Ω	±10%	1/2W	
Re53	RC05GF2H680K	Carbon	68Ω	±10%	1/2W	
Re54	RC05GF2H222K	Carbon	2.2kΩ	±10%	1/2W	
Re55	RC05GF2H560K	Carbon	56Ω	±10%	1/2W	
Re56	PD14BY2B151J	Carbon	150Ω	±5%	1/8W	
		SEMICONDUCTOR				
Qe1 ~ 4		2SA620WL4				
Qe5, 6		2SC983 (O) or (Y)				
Qe7, 8		2SC1212A (B) or (C)				
Qe9, 10		2SA743A (B) or (C)				
Qe11 ~ 14		2SC1111				
Qe15		2SC983R				
Qe16		2SC1213A (B) or (C)				
Qe17		2SA673A (B) or (C)				
Qe18, 19		2SC1213A (B) or (C)				
De1, 2		1S1555 or 1S2076				
De3, 4		STV-3				
De5 ~ 10		1S1555 or 1S2076				
De11, 12		V0-6B				
De13		YZ-140				
		POTENTIOMETER/RELAY				
VRe1, 2	R12-0052-05	Pc trimmer	100Ω (B) BIAS			
RLe1	S51-2019-05	Relay (LY2-US)				UL
		MISCELLANEOUS				
–	E02-0207-05	Transistor socket				
–	F01-0107-13	Heat sink				
–	J19-0101-04	Varistor holder				

© 1972 -5 PRINTED IN JAPAN (G)

www.hifiengine.com

KENWOOD® PRE AMP (X08-1080-10) SECTION

(KR-7200) (KR-6200) (KR-5200)

SCHEMATIC DIAGRAM

BOTTOM VIEW OF TRANSISTORS

2SC620WL

2SC1416

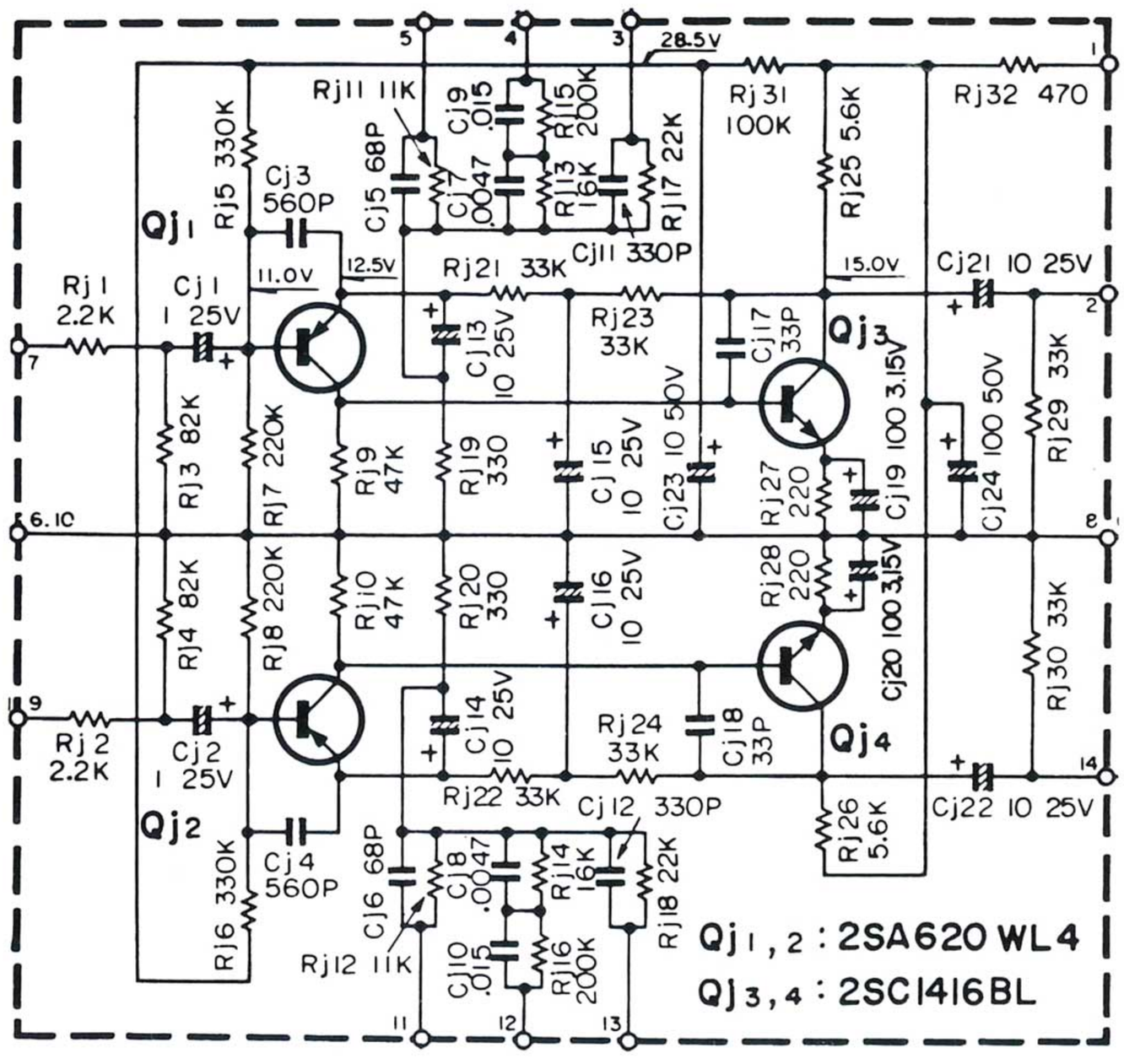

SEALED CIRCUIT ASSEMBLIES-PHANTOM VIEWS

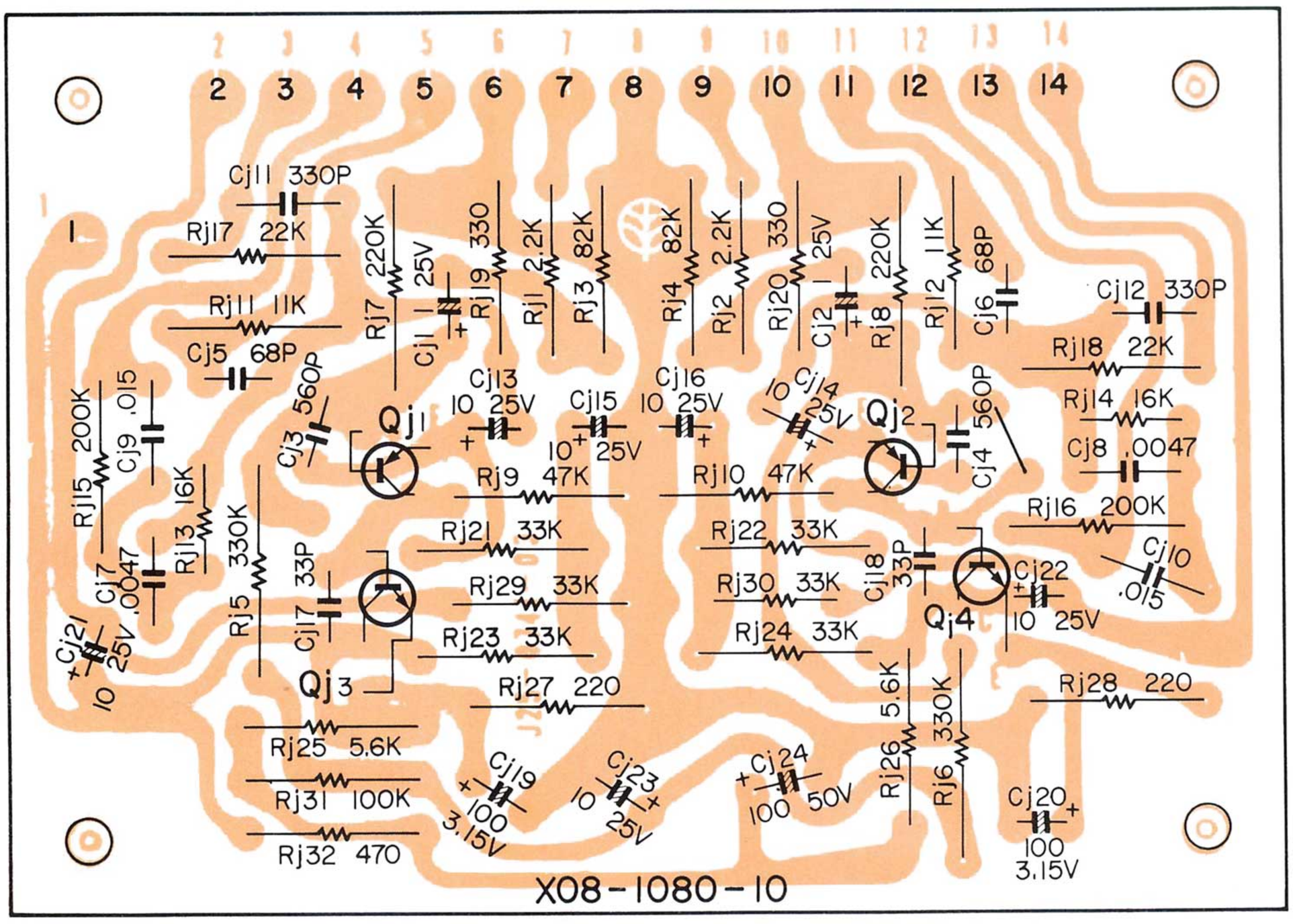

Qj1, 2: 2SA620WL4, Qj3, 4: 2SC1416 BL

www.hifiengine.com

PARTS DESCRIPTION LIST

Ref. No.	Parts No.	Description				Remarks
		CAPACITOR				
Cj1, 2	CS04E1E010M	Tantalum	1μF	25WV		
Cj3, 4	CK45D1H561M	Ceramic	560pF	±20%		
Cj5, 6	CC45SL1H680K	Ceramic	68pF	±10%		
Cj7, 8	CQ93M1H472J	Mylar	0.0047μF	±5%		
Cj9, 10	CQ93M1H153J	Mylar	0.015μF	±5%		
Cj11, 12	CK45D1H331M	Ceramic	330pF	±20%		
Cj13 ~ 16	CE04W1E100	Electrolytic	10μF	25WV		
Cj17, 18	CC45SL1H330K	Ceramic	33pF	±10%		
Cj19, 20	CE04W0F101	Electrolytic	100μF	3.15WV		
Cj21, 22	CE04W1E100	Electrolytic	10μF	25WV		
Cj23	CE04W1H100	Electrolytic	10μF	50WV		
Cj24	CE04W1H101	Electrolytic	100μF	50WV		
		RESISTOR				
Rj1, 2	PD14BY2E222J	Carbon	2.2kΩ	±5%	1/4W	
Rj3, 4	PD14BY2E823J	Carbon	82kΩ	±5%	1/4W	
Rj5, 6	RN92A2H334J	Metal film	330kΩ	±5%	1/2W	
Rj7, 8	RN92A2H224J	Metal film	220kΩ	±5%	1/2W	
Rj9, 10	PD14BY2E473J	Carbon	47kΩ	±5%	1/4W	
Rj11, 12	PD14BY2E113J	Carbon	11kΩ	±5%	1/4W	
Rj13, 14	RN92A2E163G	Metal film	16kΩ	±1%	1/4W	
Rj15, 16	PD14BY2E204J	Carbon	200kΩ	±5%	1/4W	
Rj17, 18	PD14BY2E223J	Carbon	22kΩ	±5%	1/4W	
Rj19, 20	PD14BY2E331J	Carbon	330Ω	±5%	1/4W	
Rj21 ~ 24	PD14BY2E333J	Carbon	33kΩ	±5%	1/4W	
Rj25, 26	PD14BY2E562J	Carbon	5.6kΩ	±5%	1/4W	
Rj27, 28	PD14BY2E221J	Carbon	220Ω	±5%	1/4W	
Rj29, 30	PD14BY2E333J	Carbon	33kΩ	±5%	1/4W	
Rj31	PD14BY2E104J	Carbon	100kΩ	±5%	1/4W	
Rj32	PD14BY2E471J	Carbon	470Ω	±5%	1/4W	
		SEMICONDUCTOR				
Qj1, 2		2SA620WL4				
Qj3, 4		2SC1416BL				

© 1972-5 PRINTED IN JAPAN (G)

www.hifiengine.com

KENWOOD® TONE AMP (X11-1030-01) SECTION

(KR-5200)

SCHEMATIC DIAGRAM

BOTTOM VIEW
OF
TRANSISTOR

2SC1000

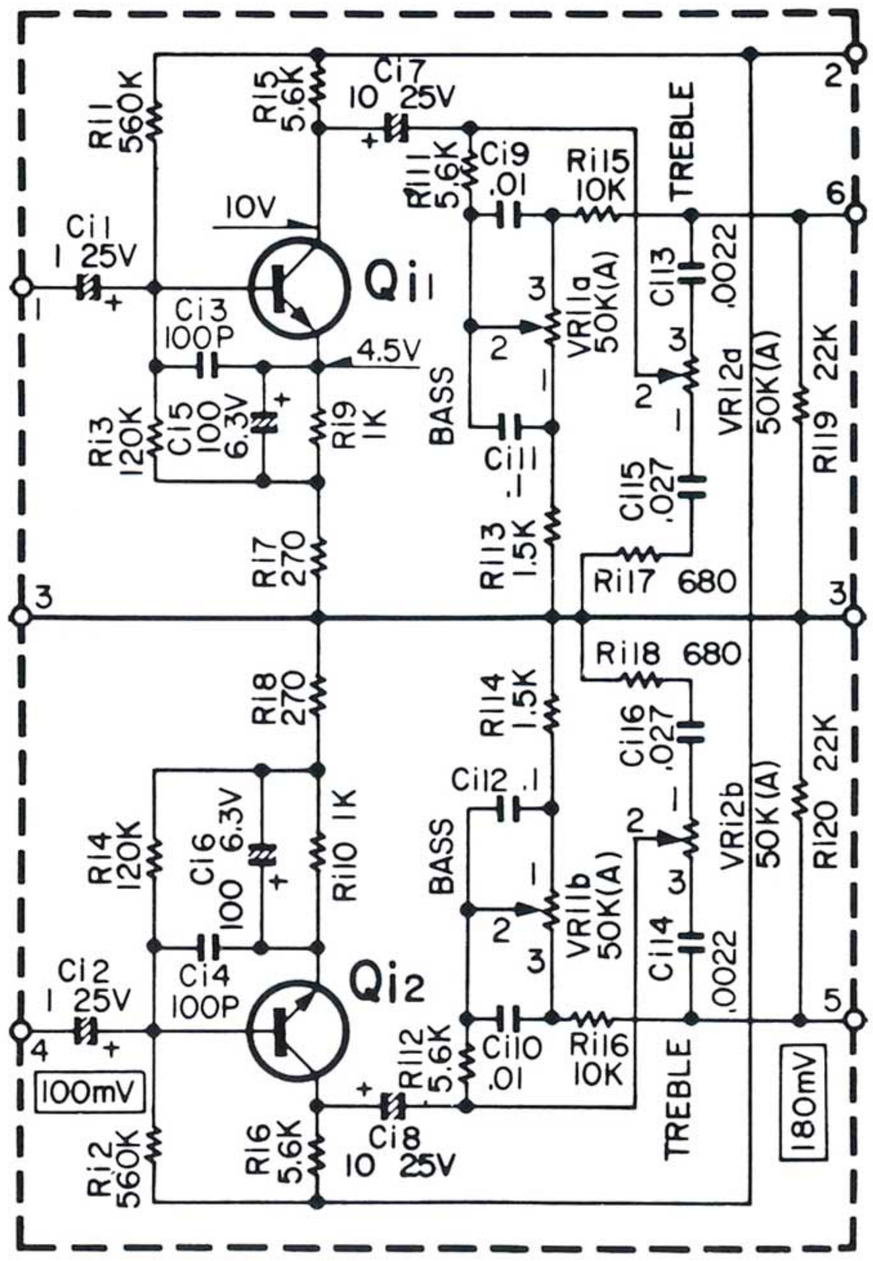

SEALED CIRCUIT ASSEMBLIES-PHANTOM VIEWS

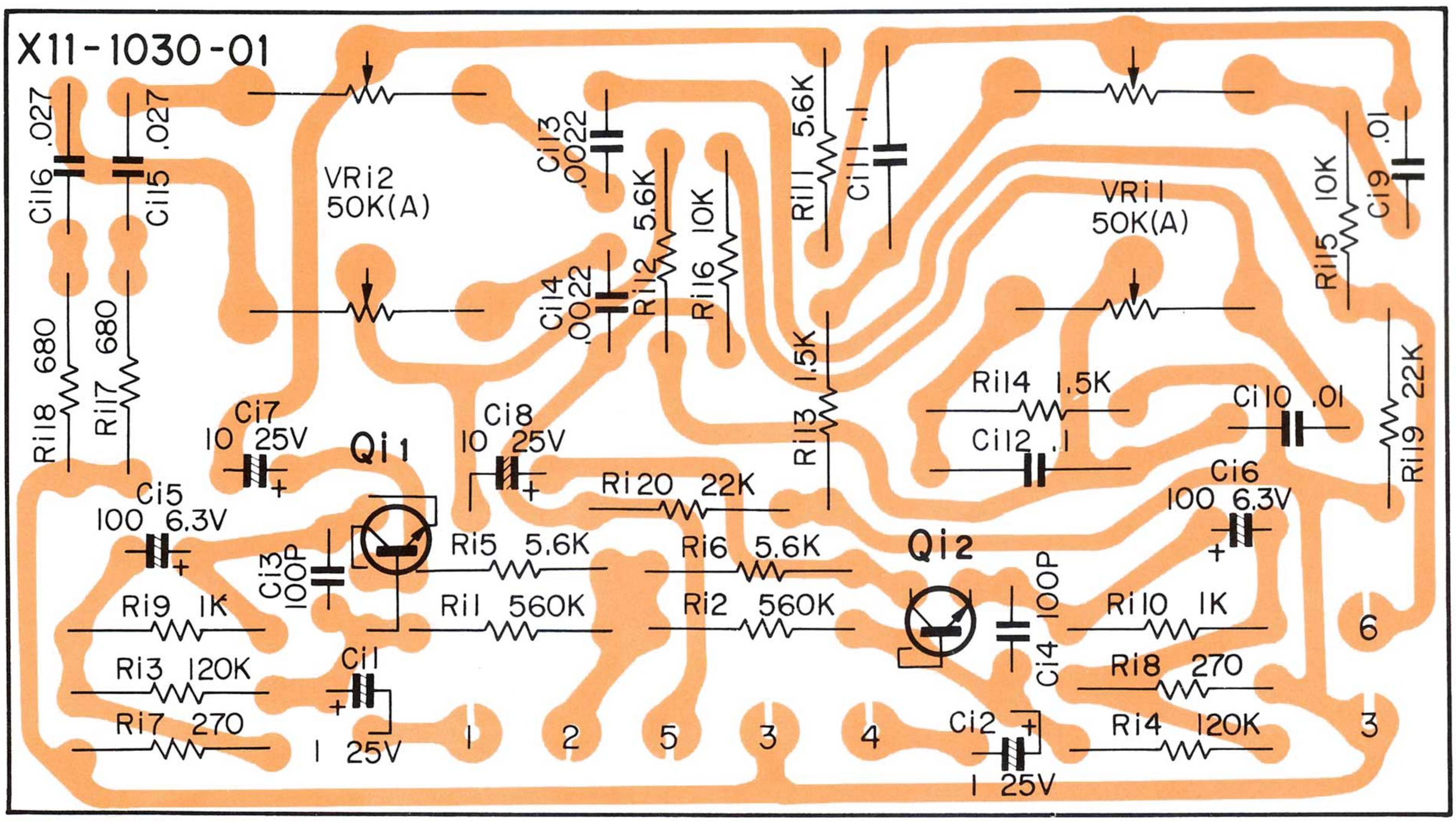

Qi1, 2: 2SC1000BL

www.hifiengine.com

PARTS DESCRIPTION LIST

Ref. No.	Parts No.	Description				Remarks
		CAPACITOR				
Ci1, 2	CS04E1E010X or M	Tantalum	1μF	25WV		
Ci3, 4	CC45SL1H101K	Ceramic	100pF	±10%		
Ci5, 6	CE04W0J101	Electrolytic	100μF	6.3WV		
Ci7, 8	CE04W1E100	Electrolytic	10μF	25WV		
Ci9, 10	CQ93M1H103K	Mylar	0.01μF	±10%		
Ci11, 12	CQ93M1H104K	Mylar	0.1μF	±10%		
Ci13, 14	CQ93M1H222K	Mylar	0.0022μF	±10%		
Ci15, 16	CQ93M1H273K	Mylar	0.027μF	±10%		
		RESISTOR				
Ri1, 2	PD14BY2E564J	Carbon	560kΩ	±5%	1/4W	
Ri3, 4	PD14BY2E124J	Carbon	120kΩ	±5%	1/4W	
Ri5, 6	PD14BY2E562J	Carbon	5.6kΩ	±5%	1/4W	
Ri7, 8	PD14BY2E271J	Carbon	270Ω	±5%	1/4W	
Ri9, 10	PD14BY2E102J	Carbon	1kΩ	±5%	1/4W	
Ri11, 12	PD14BY2E562J	Carbon	5.6kΩ	±5%	1/4W	
Ri13, 14	PD14BY2E152J	Carbon	1.5kΩ	±5%	1/4W	
Ri15, 16	PD14BY2E103J	Carbon	10kΩ	±5%	1/4W	
Ri17, 18	PD14BY2E681J	Carbon	680Ω	±5%	1/4W	
Ri19, 20	PD14BY2E223J	Carbon	22kΩ	±5%	1/4W	
		SEMICONDUCTOR				
Qi1, 2		2SC1000BL				
		POTENTIOMETER				
VRi1	R08-4054-05	Potentiometer 50kΩ (A) dual BASS				
VRi2	R08-4054-05	Potentiometer 50kΩ (A) dual TREBLE				

© 1972-5 PRINTED IN JAPAN (G)

www.hifiengine.com

KENWOOD® PUSH SWITCH (X13-1210-11) SECTION

(KR-5200)

SCHEMATIC DIAGRAM

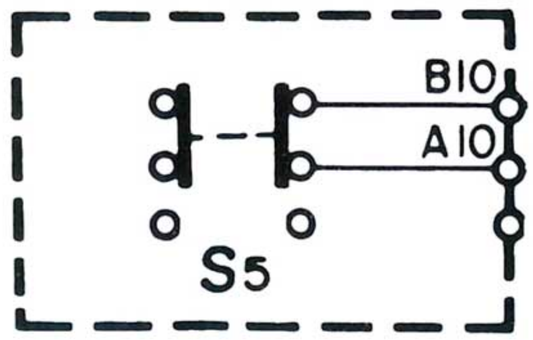

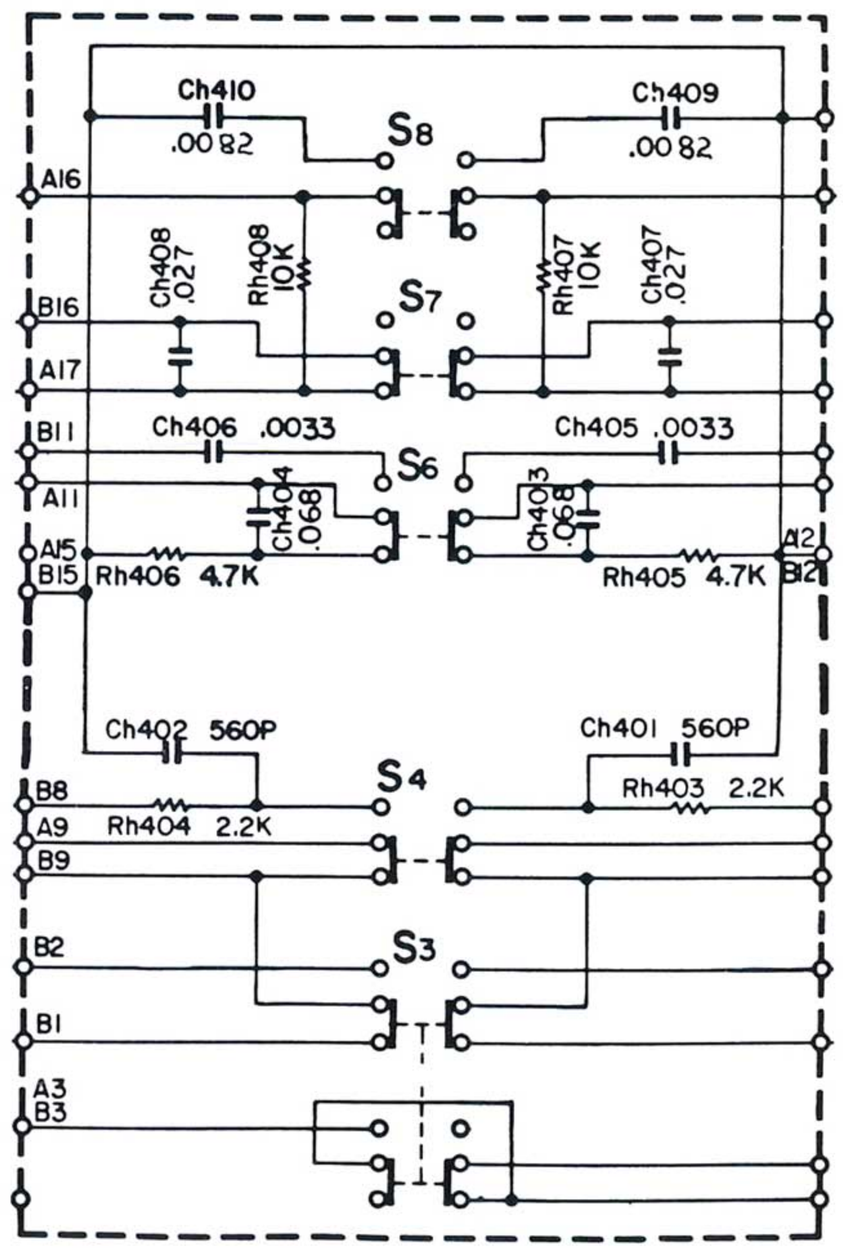

SEALED CIRCUIT ASSEMBLIES-PHANTOM VIEWS

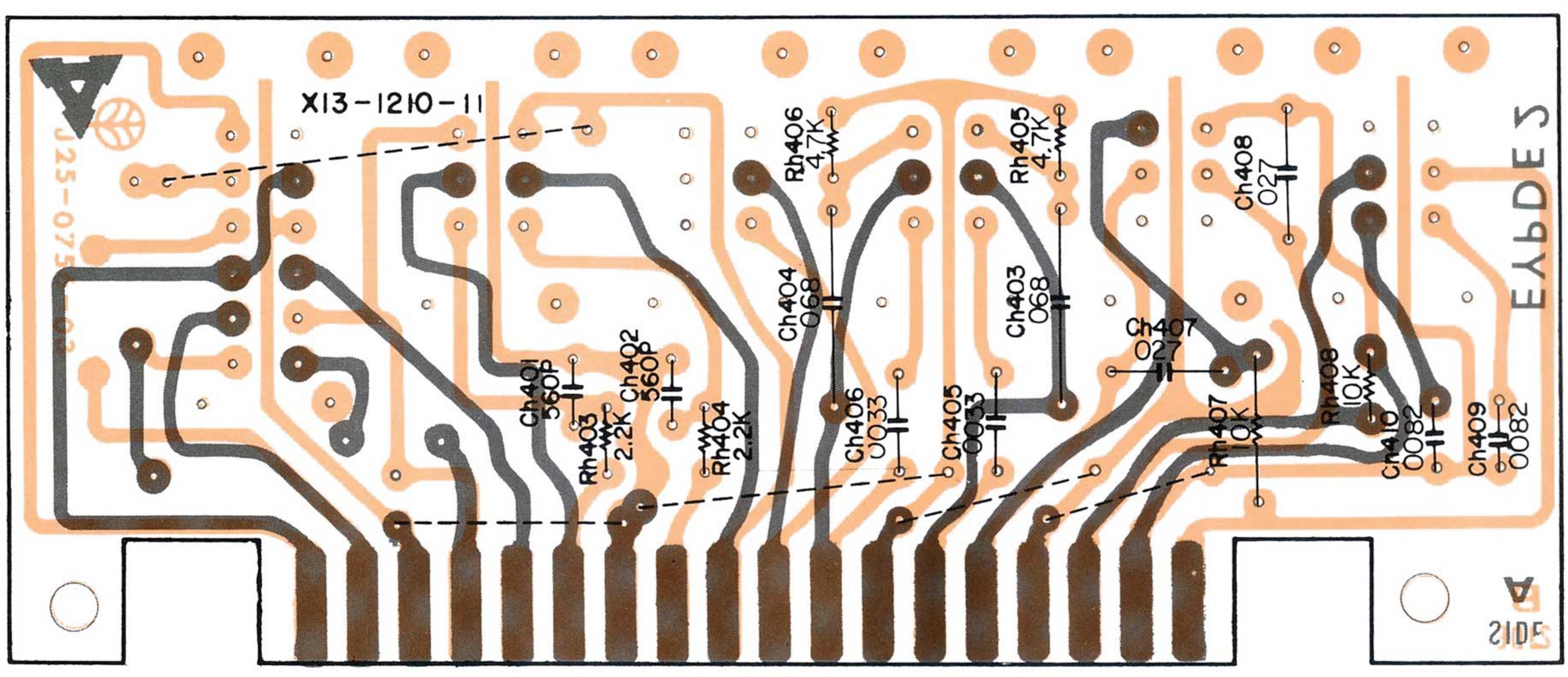

www.hifiengine.com

PARTS DESCRIPTION LIST

Ref. No.	Parts No.	Description				Remarks
		CAPACITOR				
Ch401, 402	CK45D1H561M	Ceramic	560pF	±20%		
Ch403, 404	CQ93M1H683K	Mylar	0.068μF	±10%		
Ch405, 406	CQ93M1H332K	Mylar	0.0033μF	±10%		
Ch407, 408	CQ93M1H273K	Mylar	0.027μF	±10%		
Ch409, 410	CQ93M1H822K	Mylar	0.0082μF	±10%		
		RESISTOR				
Rh403, 404	PD14BY2E222J	Carbon	2.2kΩ	±5%	1/4W	
Rh405, 406	PD14BY2E472J	Carbon	4.7kΩ	±5%	1/4W	
Rh407, 408	PD14BY2E103J	Carbon	10kΩ	±5%	1/4W	
		SWITCH				
S3	S40-6006-05	Six pushbutton (TAPE-A)				
S4	S40-6006-05	Six pushbutton (TAPE-B)				
S5	S40-6006-05	Six pushbutton (FM MUTING)				
S6	S40-6006-05	Six pushbutton (LOUDNESS)				
S7	S40-6006-05	Six pushbutton (LO-FIL)				
S8	S40-6006-05	Six pushbutton (HI-FIL)				

© 1972-5 PRINTED IN JAPAN (G)

www.hifiengine.com

KENWOOD ELECTRONICS, INC.

- 15777 SOUTH BROADWAY, GARDENA, CALIFORNIA 90248
- 72-02 51ST AVENUE, WOODSIDE. N.Y. 11377

CANADIAN EXCLUSIVE DISTRIBUTOR

MAGNASONIC CANADA LTD.

- 4980 BUCHAN ST. MONTREAL P.Q, CANADA
- 14 BANIGAN DRIVE THORNCLIFFE PARK TORONTO CANADA

© 1972-5 PRINTED IN JAPAN (G)

www.hifiengine.com