SERVICE MANUAL

KENWOOD®

KR-810

COMPUTERIZED HIGH SPEED STEREO RECEIVER

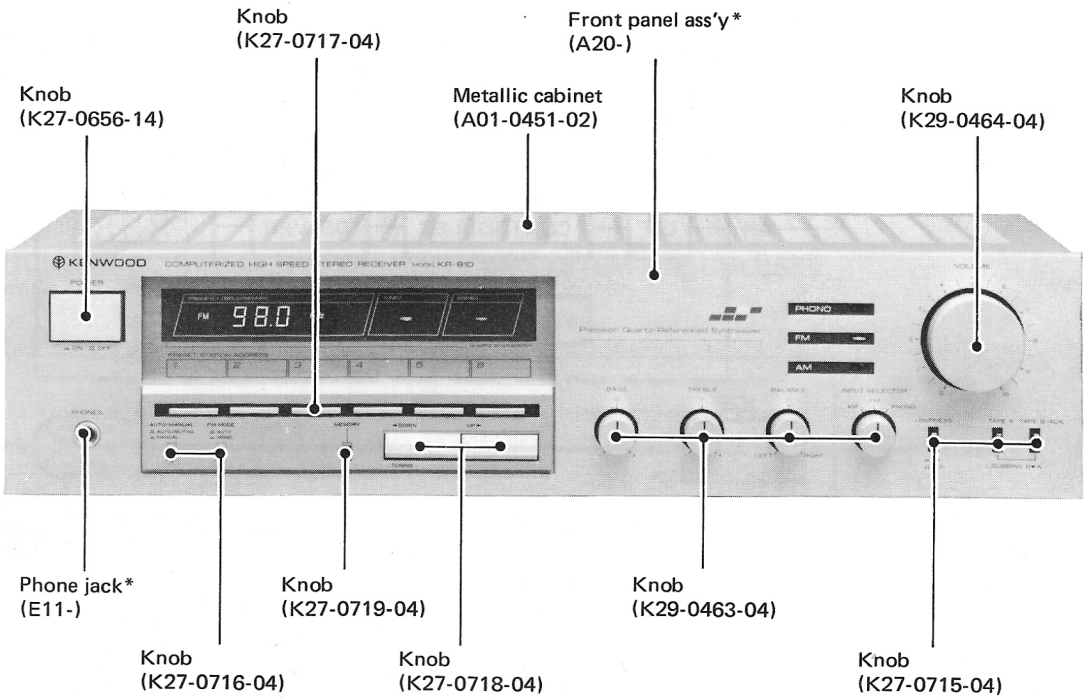

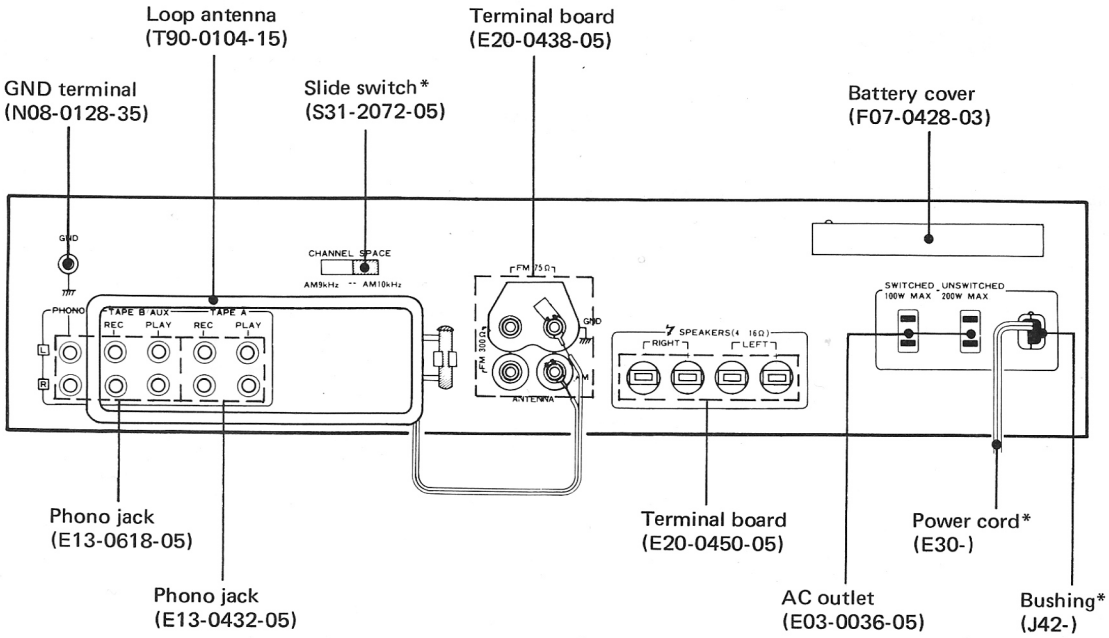

* Refer to Parts List on page 10.

BLOCK/LEVEL DIAGRAM

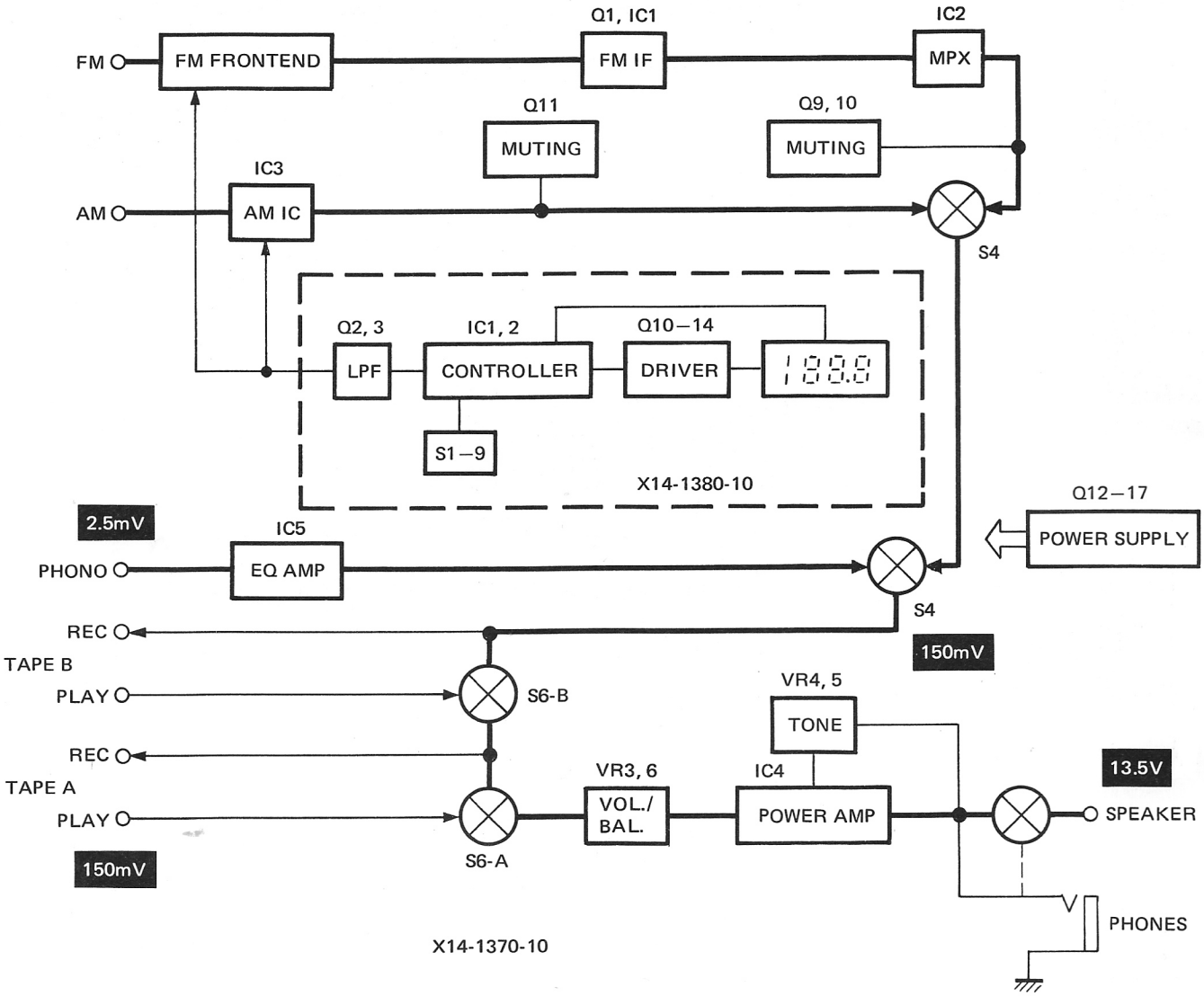

ADJUSTMENT/REGLAGES/ABGLEICH

TEST INSTRUMENT	APPAREILLAGE	PRÜFINSTRUMENTE	
Oscilloscope	Oscilloscope	Oszilloskop	SCOPE
AM signal generator	Générateur MA	MW-Signalgenerator	AM-SG
FM signal generator	Générateur MF	UKW-Signalgenerator	FM-SG
Audio generator	Générateur audio fréquences	NF-Signalgenerator	AG
AC voltmeter	Voltmètre CA	Wechselspannungsmesser	
FM multiplex generator	Générateur multiplex stéréo	UKW-Multiplexgenerator	FM-MPX
Frequency counter	Fréquencemètre	Frequenzzähler	
DC voltmeter	Voltmètre CC	Gleichspannungsmesser	
Distortion meter	Distorsiomètre	Klirrfaktormesser	
Dummy antenna	Antenne fictive	Antennennachbildung	

SYSTEM CONNECTIONS/RACCORDEMENTS DU SYSTEME/SYSTEM-ANSCHLÜSSE

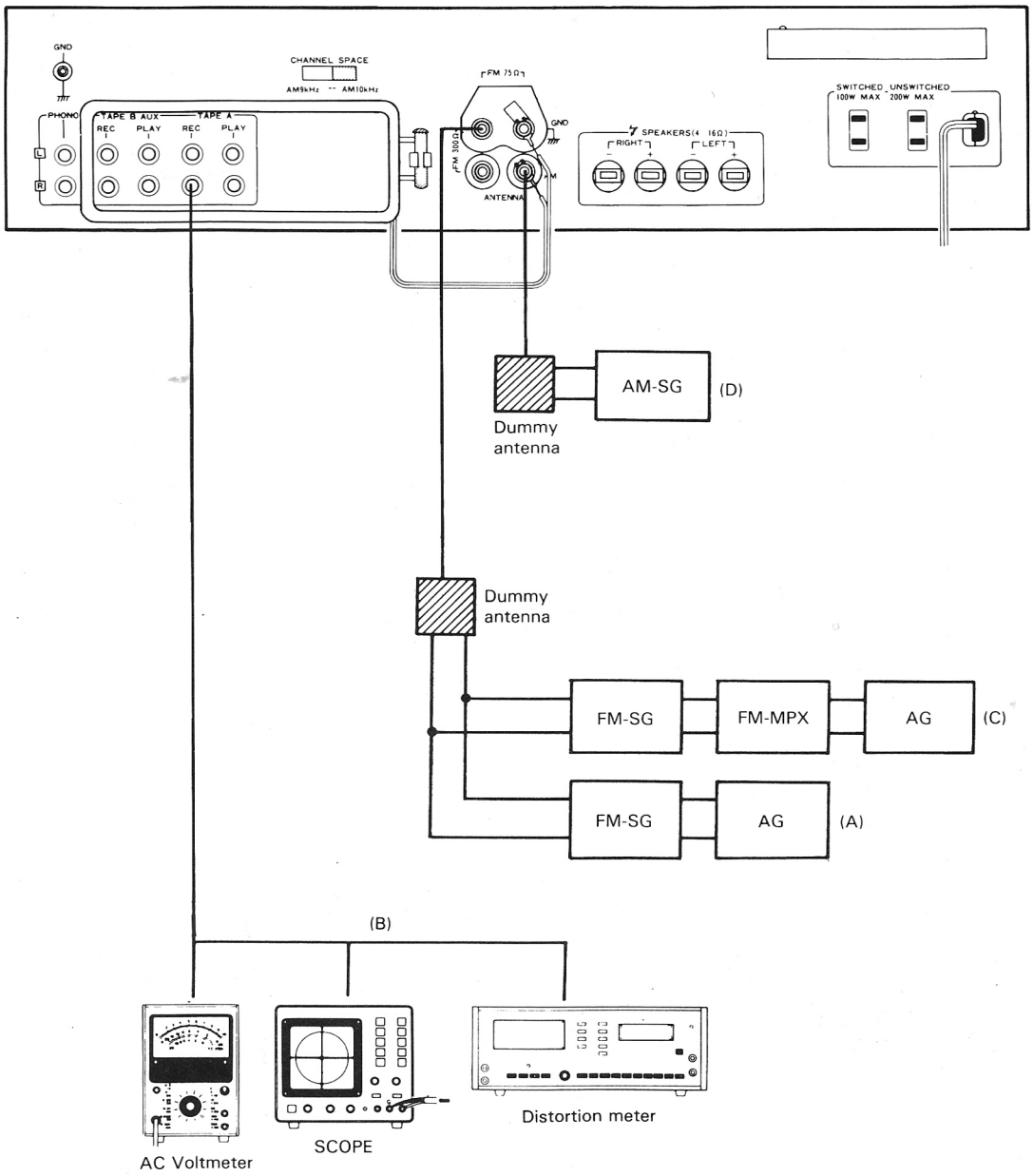

ADJUSTMENT

NO.	ITEM	INPUT SETTINGS	OUTPUT SETTINGS	TUNER SETTINGS	ALIGNMENT POINTS	ALIGN FOR	FIG.
	FM SECTION	**SELECTOR : FM**		**FM MODE : AUTO/ MUTING**			
1	**DISCRIMINATOR (1)**	(A) 100.1MHz 1kHz ± 75kHz dev 60dB (ANT input)	Connect a DC voltmeter across R13	MONO 100.1MHz	L1	0V	(a)
2	**DISCRIMINATOR (2)**	(A) 100.1MHz 1kHz ± 75kHz dev 60dB (ANT input)	(B)	MONO 100.1MHz	L2	Minimum distortion	
			Repeat alignments 1 and 2 several times.				
3	**VCO**	(A) 100.1MHz 0 dev 60dB (ANT input)	Connect a frequency counter to 9 pin of IC2.	100.1MHz	VR2	19.00kHz	(b)
4	**SEPARATION**	(C) 100.1MHz 1kHz ± 68.25kHz dev Selector : L or R Pilot : ± 6.75kHz dev 60dB (ANT input)	(B)	100.1MHz	VR1	Minimum crosstalk. A compromise adjustment may be required if left-to-right and right-to-left separations are unequal.	
5	**DISTORTION (STEREO)**	(C) 100.1MHz 1kHz ± 68.25kHz dev Selector : L or R Pilot : ± 6.75kHz dev 60dB (ANT input)	(B)	100.1MHz	T1 (Front end)	Minimum distortion. (Repeat alignments 1 and 2)	
	AM SECTION	**SELECTOR : AM**	**Keep the loop antenna installed.**				
(1)	**BAND EDGE (1)**	—	Connect a DC voltmeter to terminal 7.	1620kHz (1611kHz)	L4	9.0V	(c)
(2)	**RF ALIGNMENT (1)**	(D) 630kHz 400Hz, 30% mod	(B)	630kHz	L3, 5	Maximum amplitude and symmetry of the oscilloscope display.	
(3)	**RF ALIGNMENT (2)**	(D) 1440kHz 400Hz, 30% mod	(B)	1440kHz	TC1	Maximum amplitude and symmetry of the oscilloscope display.	
			Repeat alignments (3) and (4) several times.				

REGLAGES

N°	ITEM	REGLAGE DE L'ENTREE	REGLAGE DE LA SORTIE	REGLAGE DU TUNER	POINTS DE L'ALIGNEMENT	ALIGNER POUR	FIG.
	SECTION MF	**SELECTEUR : FM**		**FM MODE : AUTO/MUTING**			
1	**DISCRIMINA-TEUR (1)**	(A) 100,1MHz 1kHz ± 75kHz dév 60dB (Entrée ANT)	Connecter un voltmètre CC sur R13.	MONO 100,1MHz	L1	0V	(a)
2	**DISCRIMINA-TEUR (2)**	(A) 100,1MHz 1kHz ± 75kHz dév 60dB (Entrée ANT)	(B)	MONO 100,1MHz	L2	Distorsion minimale.	
			Répéter les points 1 et 2 plusieurs fois.				
3	**OSCILLATEUR CONTROLE PAR LA TENSION**	(A) 100,1MHz 0 dév 60dB (Entrée ANT)	Connecter un compteur de fréquence à la fiche 9 de IC2.	100,1MHz	VR2	19,00kHz	(b)
4	**SEPARATION**	(C) 100,1MHz 1kHz ± 68,25kHz dév Sélection : L ou R Signal pilote : ± 6,75kHz dév 60dB (Entrée ANT)	(B)	100,1MHz	VR1	Diaphonie minimale. Un compromis de réglage peut être nécessaire si les séparations de gauche à droite et de droite à gauche sont inégales.	
5	**DISTORSION (STEREO)**	(C) 100,1MHz 1kHz ± 68,25kHz dév Sélection : L ou R Signal pilote : ± 6,75kHz dév 60dB (Entrée ANT)	(B)	100,1MHz	T1 (Tête H.F.)	Distorsion minimale. (Répéter les points 1 et 2 plusieurs fois)	
	SECTION MA	**SELECTEUR : AM**	**Laisser l'antenne bouche MA installée.**				
(1)	**BORD DE BANDE (1)**	—	Connecter un voltmètre CC au terminal 7.	1620kHz (1611kHz)	L4	9,0V	(c)
(2)	**ALIGNEMENT H.T. (1)**	(D) 630kHz 400Hz, 30% mod	(B)	630kHz	L3, 5	Amplitude et symétrie maximale de l'affichage de l'oscilloscope.	
(3)	**ALIGNEMENT H.T. (2)**	(D) 1440kHz 400Hz, 30% mod	(B)	1440kHz	TC1	Amplitude et symétrie maximale de l'affichage de l'oscilloscope.	
			Répéter les points (3) et (4) plusieurs fois.				

ABGLEICH

NR.	GEGENSTAND	EINGANGS-EINSTELLUNG	AUSGANG-EINSTELLUNG	TUNER EINSTELLUNG	ABGLEICHE PUNKTE	ABGLEICHEN FÜR	ABB.
UKW-EMPFANGSABTEILUNG			WÄHLER : FM		FM MODE : AUTO/ MUTING		
1	DISKRIMINATOR (1)	(A) 100,1MHz 1kHz ± 75kHz Hub 60dB (ANT-Eingang)	Einen Gleichspannungs über R13 anschließen.	MONO 100,1MHz	L1	0V	(a)
2	DISKRIMINATOR (2)	(A) 100,1MHz 1kHz ± 75kHz Hub 60dB (ANT-Eingang)	(B)	MONO 100,1MHz	L2	Minimaler Klirrfaktor	
Abstimmungen 1 und 2 mehrere Male wiederholen.							
3	SPANNUNGS-GEREGELTER OSZILLATOR	(A) 100,1MHz 0 Hub 60dB (ANT-Eingang)	Einen Frequenzmesser zum Stift 9 von IC2 anschließen.	100,1MHz	VR2	19,00kHz	(b)
4	STEREO KANAL TRENNUNG	(C) 100,1MHz 1kHz ± 68,25kHz Hub Wähler : L oder R Pilotton : ± 6,75kHz Hub 60dB (ANT-Eingang)	(B)	100,1MHz	VR1	Minimales Übersprechen. Eine Ausgleichrege lung kann notwendig sein, falls links-zu-rechts und rechts-zu-links Trennungen ungleich sind.	
5	KLIRRFAKTOR (STEREO)	(C) 100,1MHz 1kHz ± 68,25kHz Hub Wähler : L oder R Pilotton : ± 6,75kHz Hub 60dB (ANT-Eingang)	(B)	100,1MHz	T1 (Frontende)	Minimaler Klirrfaktor. (Abstimmunger 1 und 2 mehrere Male wiederholen)	
MW-EMPFANGSABTEILUNG			Die MW-Rahmenantenne angebracht lassen.				
(1)	BANDKANTE (1)	–	Einen Gleichstom spannungsmesser zu Klemme 7 anschließen.	1620kHz (1611kHz)	L4	9,0V	(c)
(2)	HF-ABGLEICH (1)	(D) 630kHz 400Hz, 30% mod	(B)	630kHz	L3, 5	Maximale amplitude und Symmetrie des Oszilloskopbildes.	
(3)	HF-ABGLEICH (2)	(D) 1440kHz 400Hz, 30% mod	(B)	1440kHz	TC1	Maximale amplitude und Symmetrie des Oszilloskopbildes.	
Abstimmungen (3) und (4) nehrere Male wiederholen.							

PC BOARD

RECEIVER (X14-1370-10) Component side view

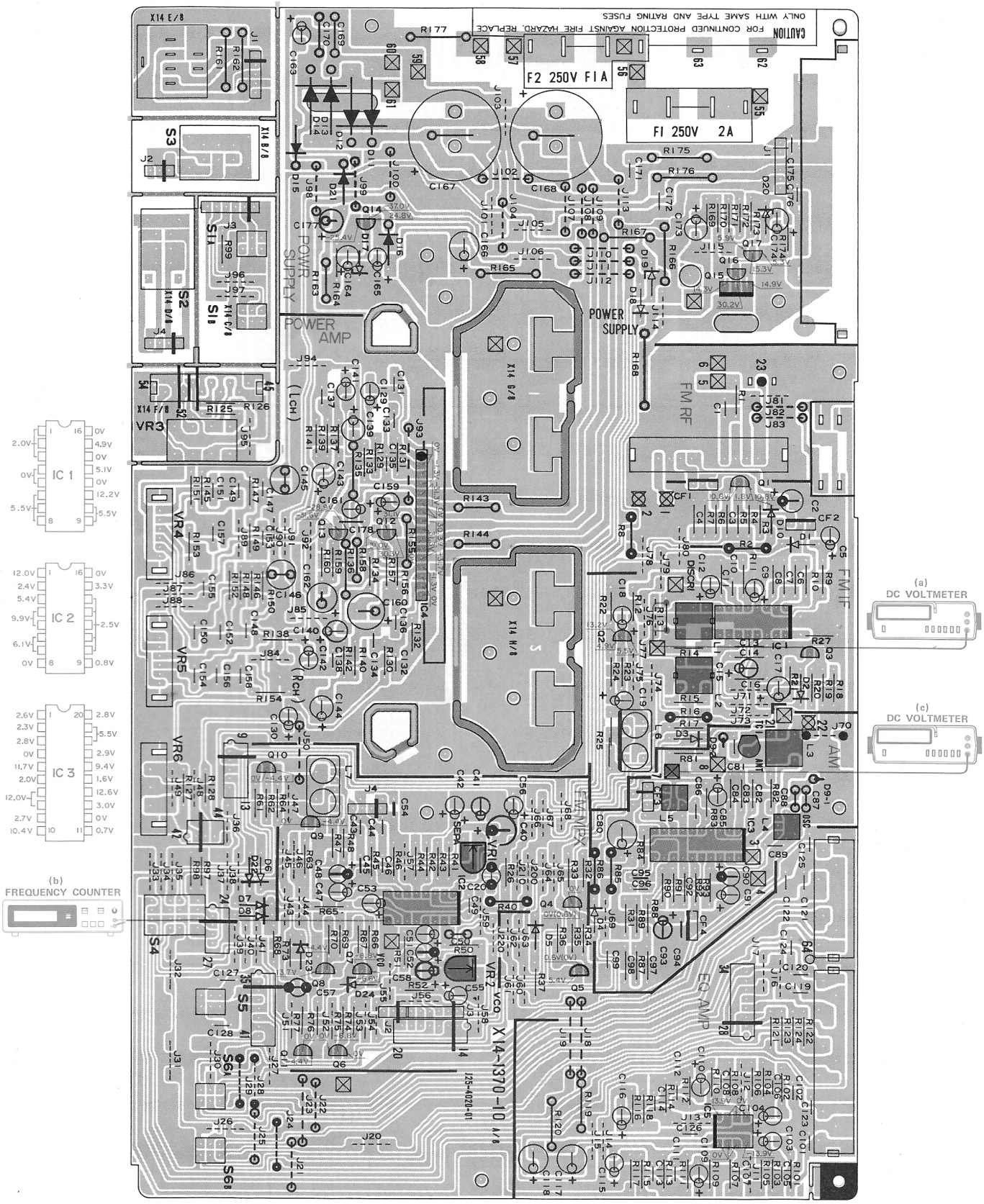

Refer to the schematic diagram for the values of resistors and capacitors.
The PC board drawing is viewed from the side easy to check.

PC BOARD

SYNTHESIZER (X14-1380-10) Component side view

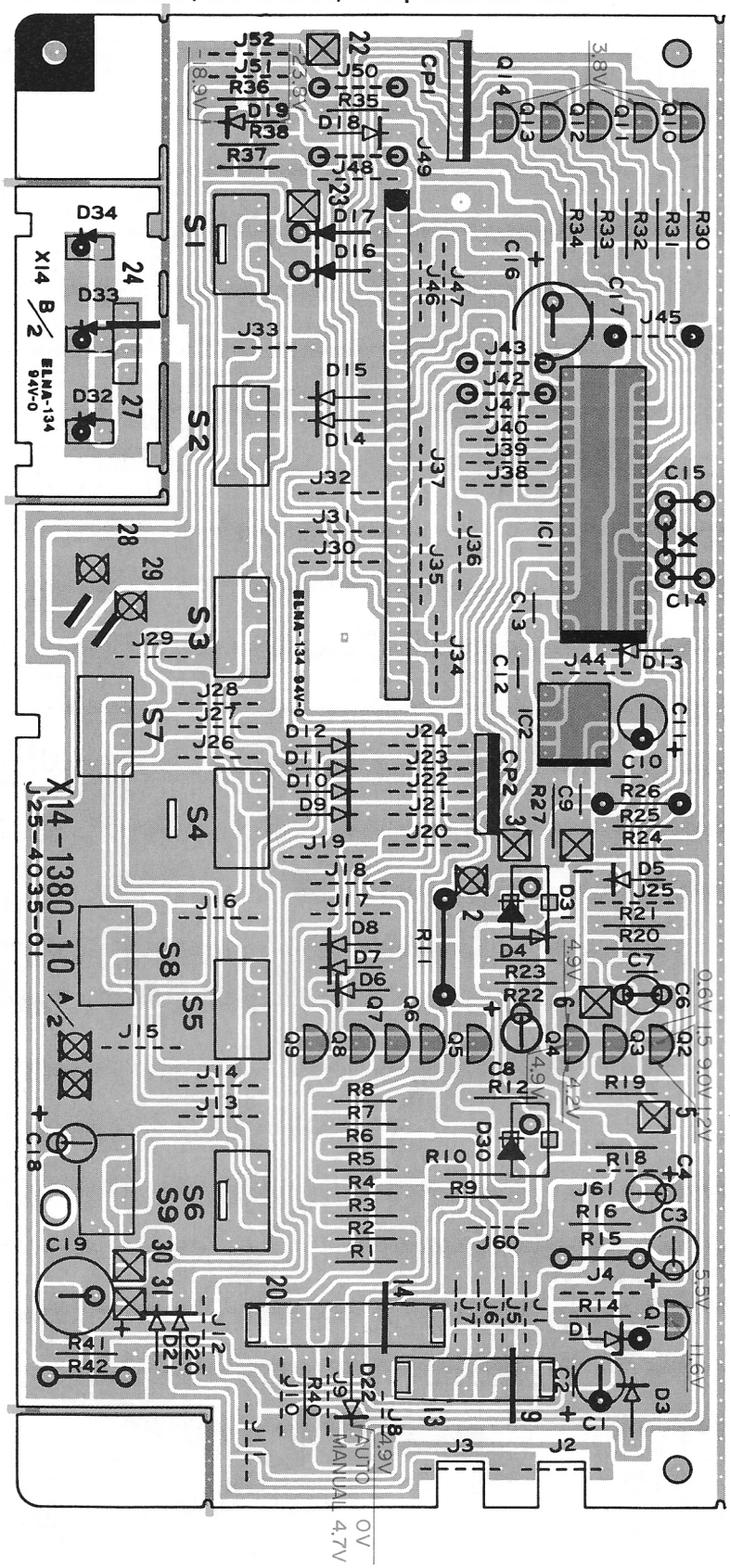

Refer to the schematic diagram for the values of resistors and capacitors.
The PC board drawing is viewed from the side easy to check.

KENWOOD®

2SC1675
2SC1841
JA101(P)
JC501(P)

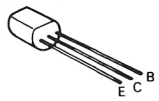

2SD330

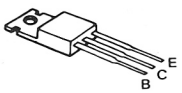

AN6552
μPB553AC

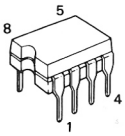

HA11225

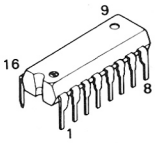

μPC1235C

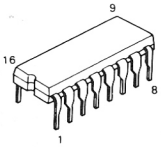

STK-460A

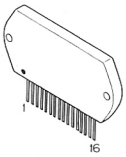

LA1245

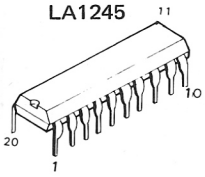

μPD1703C-018

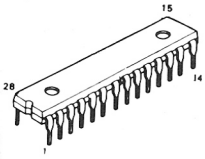

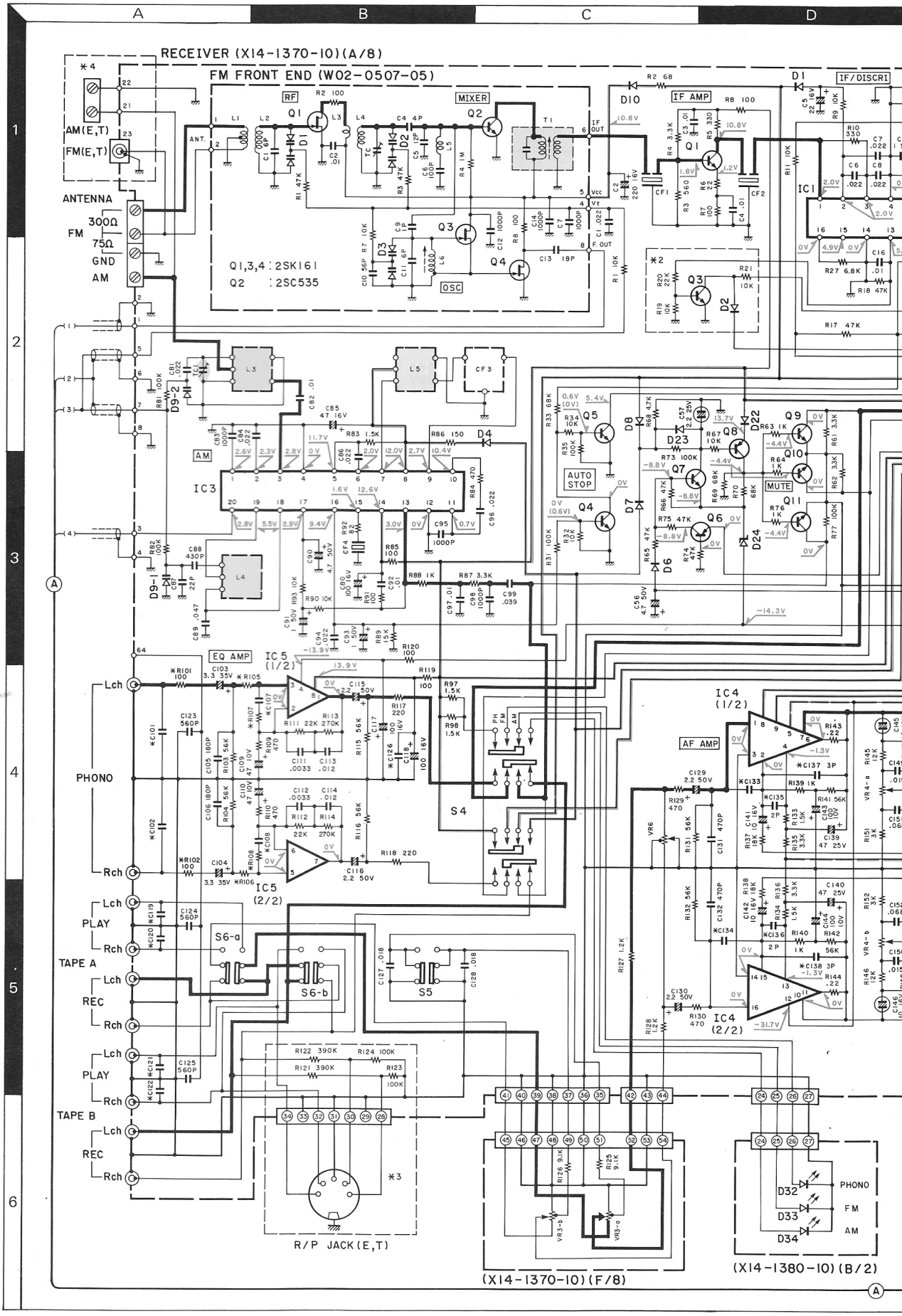

COMPUTERIZED HIGH SPEED STEREO RECEIVER

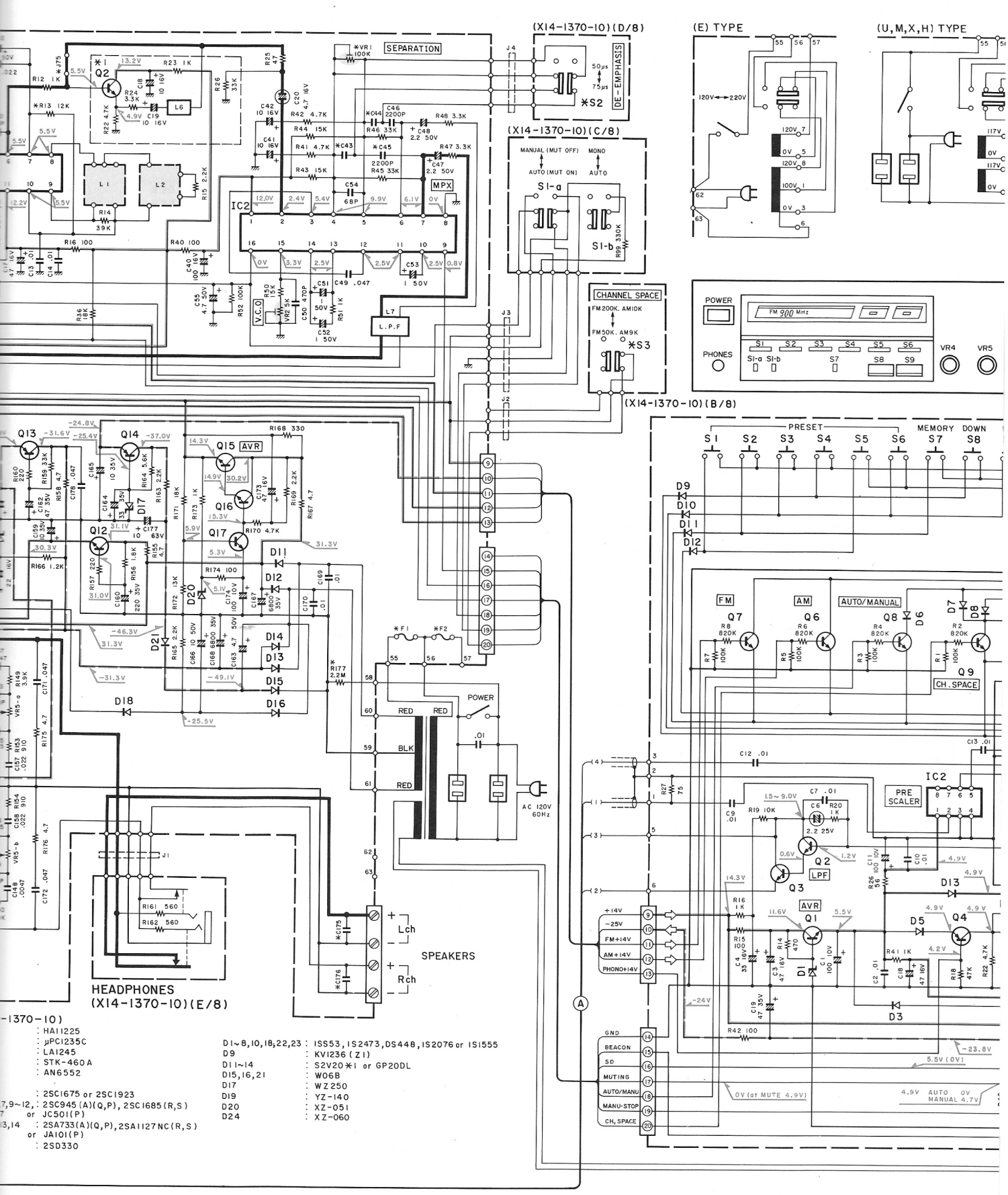

-1370-10)

	: HA11225
	: μPC1235C
	: LA1245
	: STK-460A
	: AN6552
	: 2SC1675 or 2SC1923
7,9~12,	: 2SC945(A)(Q,P), 2SC1685(R,S)
7 or	JC501(P)
3,14	: 2SA733(A)(Q,P), 2SA1127NC(R,S)
or	JA101(P)
	: 2SD330

D1~8,10,18,22,23	: 1SS53, 1S2473, DS448, 1S2076 or 1S1555
D9	: KV1236(Z1)
D11~14	: S2V20*1 or GP20DL
D15,16,21	: W06B
D17	: WZ250
D19	: YZ-140
D20	: XZ-051
D24	: XZ-060

• DC voltages are measured by a VOM of 25kΩ/V input impedance.

• Les tensions de courant continu son
d'une impédance d'entrée de 25kΩ/

KR-810

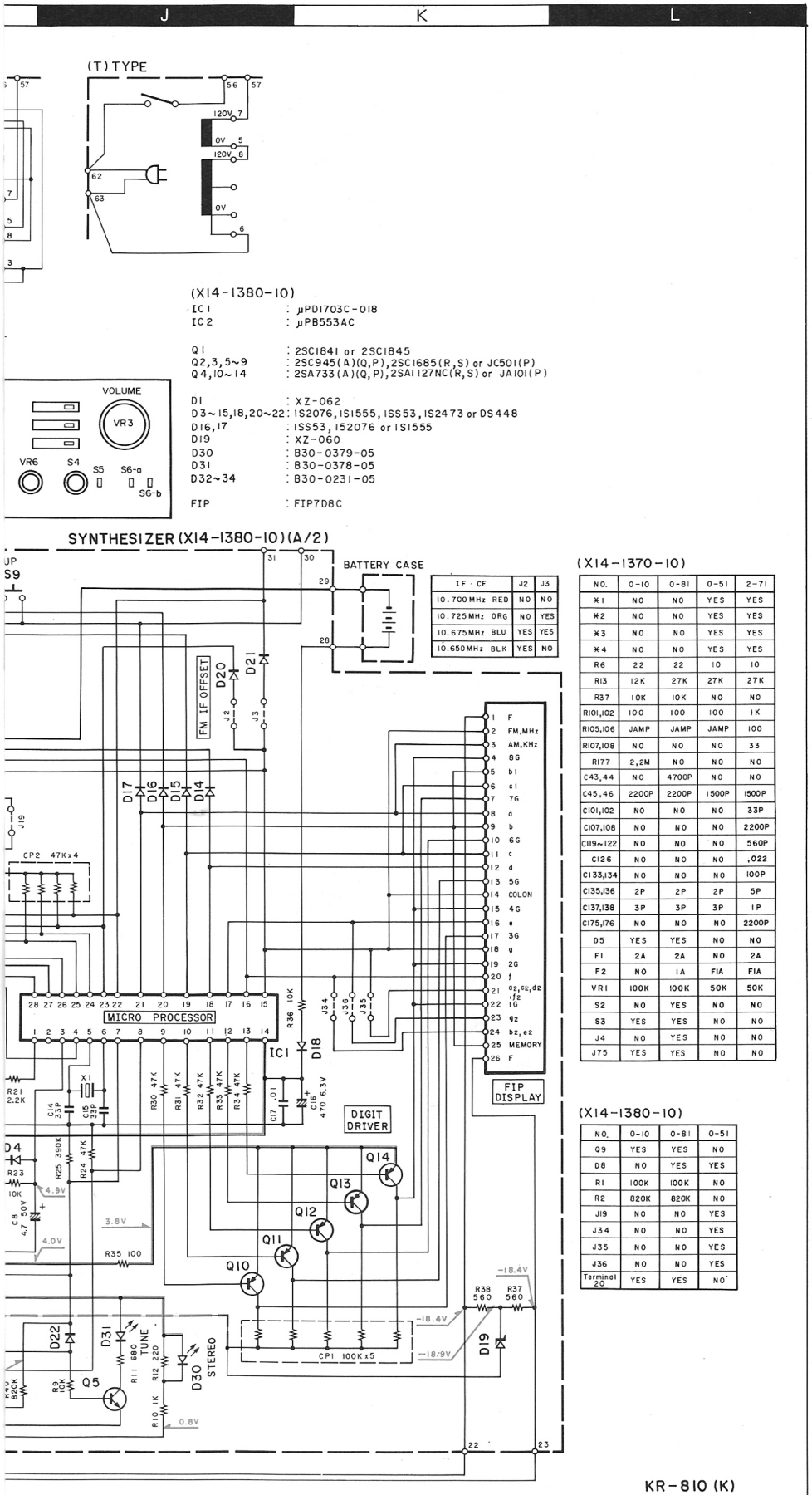

IF · CF		J2	J3
10.700MHz	RED	NO	NO
10.725MHz	ORG	NO	YES
10.675MHz	BLU	YES	YES
10.650MHz	BLK	YES	NO

NO.	0-10	0-81	0-51	2-71
*1	NO	NO	YES	YES
*2	NO	NO	YES	YES
*3	NO	NO	YES	YES
*4	NO	NO	YES	YES
R6	22	22	10	10
R13	12K	27K	27K	27K
R37	10K	10K	NO	NO
R101,102	100	100	100	1K
R105,106	JAMP	JAMP	JAMP	100
R107,108	NO	NO	NO	33
R177	2,2M	NO	NO	NO
C43,44	NO	4700P	NO	NO
C45,46	2200P	2200P	1500P	1500P
C101,102	NO	NO	NO	33P
C107,108	NO	NO	NO	2200P
C119~122	NO	NO	NO	560P
C126	NO	NO	NO	.022
C133,134	NO	NO	NO	100P
C135,136	2P	2P	2P	5P
C137,138	3P	3P	3P	1P
C175,176	NO	NO	NO	2200P
D5	YES	YES	NO	NO
F1	2A	2A	NO	2A
F2	NO	1A	FIA	FIA
VR1	100K	100K	50K	50K
S2	NO	YES	NO	NO
S3	YES	YES	NO	NO
J4	NO	YES	NO	NO
J75	YES	YES	NO	NO

NO.	0-10	0-81	0-51
Q9	YES	YES	NO
D8	NO	YES	YES
R1	100K	100K	NO
R2	820K	820K	NO
J19	NO	NO	YES
J34	NO	NO	YES
J35	NO	NO	YES
J36	NO	NO	YES
Terminal 20	YES	YES	NO*

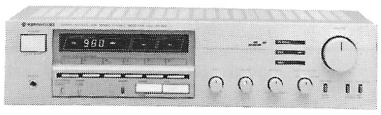

SPECIFICATIONS

Audio section

Power Output

23 watts* per channel minimum RMS, both channel driven at 8 ohms from 20 Hz to 20,000 Hz with no more than 0.07% total harmonic distortion.

Total Harmonic Distortion
(20 Hz to 20,000 Hz from TAPE)
rated power into 8 ohms 0.07%
1 watt power into 8 ohms 0.03%
Intermodulation Distortion
(60 Hz:7 kHz=4:1 SMPTE)
rated power into 8 ohms 0.07%
Slew Rate ..... ±40 V/μsec
Rise Time ..... 3 μsec
Damping Factor (at 8 ohms 1 kHz) 50
Input Sensitivity/Impedance
PHONO ..... 2.5 mV/50 k ohms
TAPE ..... 150 mV/50 k ohms
Signal to Noise Ratio (A weighted)
PHONO ..... 72 dB for 2.5 mV input
78 dB for 5.0 mV input
TAPE ..... 100 dB for 150 mV input
Maximum PHONO Input Level at 1,000 Hz ..... 150 mV (rms), THD 0.07%
Frequency Response
PHONO RIAA Standard
Curve ..... 20 Hz to 20,000 Hz ±0.3 dB
TAPE ..... 5 Hz to 100 kHz −3 dB
Tone Control
Bass ..... ±8 dB at 100 Hz
Treble ..... ±8 dB at 10 kHz
Loudness Control
(VOL. −30dB) ..... +10 dB at 100 Hz
Output Level/Impedance
TAPE REC Out (Pin) ..... 150 mV/1 k ohms

FM tuner section

Usable Sensitivity ..... 10.8 dBf (1.9 μV)
50 dB Quieting Sensitivity
Mono ..... 17.3 dBf (4.0 μV)
Stereo ..... 37.5 dBf (40.0 μV)
Signal to Noise Ratio at 65 dBf
Mono ..... 75 dB
Stereo ..... 71 dB
Total Harmonic Distortion at 1,000 Hz
Mono 0.1%
Stereo 0.15%
Frequency Response ..... 30 Hz to 15,000 Hz, +0.5 dB, −2.0 dB
Capture Ratio ..... 1 dB
Image Rejection Ratio ..... 45 dB
Spurious Response Ratio ..... 85 dB
IF Response Ratio ..... 95 dB
Alternate Channel Selectivity ..... 50 dB at 400 kHz
AM Suppression Ratio ..... 50 dB
Stereo Separation Ratio
at 1,000 Hz ..... 45 dB
at 50 Hz to 10,000 Hz ..... 3.3 dB
Subcarrier Product Ratio ..... 53 dB
Antenna Impedance ..... 300 ohms balanced & 75 ohms unbalanced
FM Frequency Range ..... 88 MHz to 108 MHz

AM tuner section

Usable Sensitivity ..... 10 μV
Signal to Noise Ratio ..... 50 dB
Image Rejection ..... 40 dB
Selectivity ..... 30 dB

GENERAL

Power Consumption ..... 1.6 A
18 watts at no signal
AC Outlet ..... Switched x 1
Unswitched x 1
Dimensions ..... W440 mm (17-5/16")
H 108 mm (4-1/4")
D 245 mm (9-41/64")
Net Weight ..... 4.5 kg (10.6 lb)
Gross Weight ..... 5.4 kg (11.9 lb)

* Measured pursuant to Federal Trade Commission's Trade Regulation rule on Power Output Claims for Amplifier in U.S.A.

t mesurées par un multimètre
V.

● Die Gleichstrom-Spannungen werden durch ein Vielfachmeßgerät von 25kΩ/V Eingangs-Impedanz gemessen.

KR-810

EXPLODED VIEW

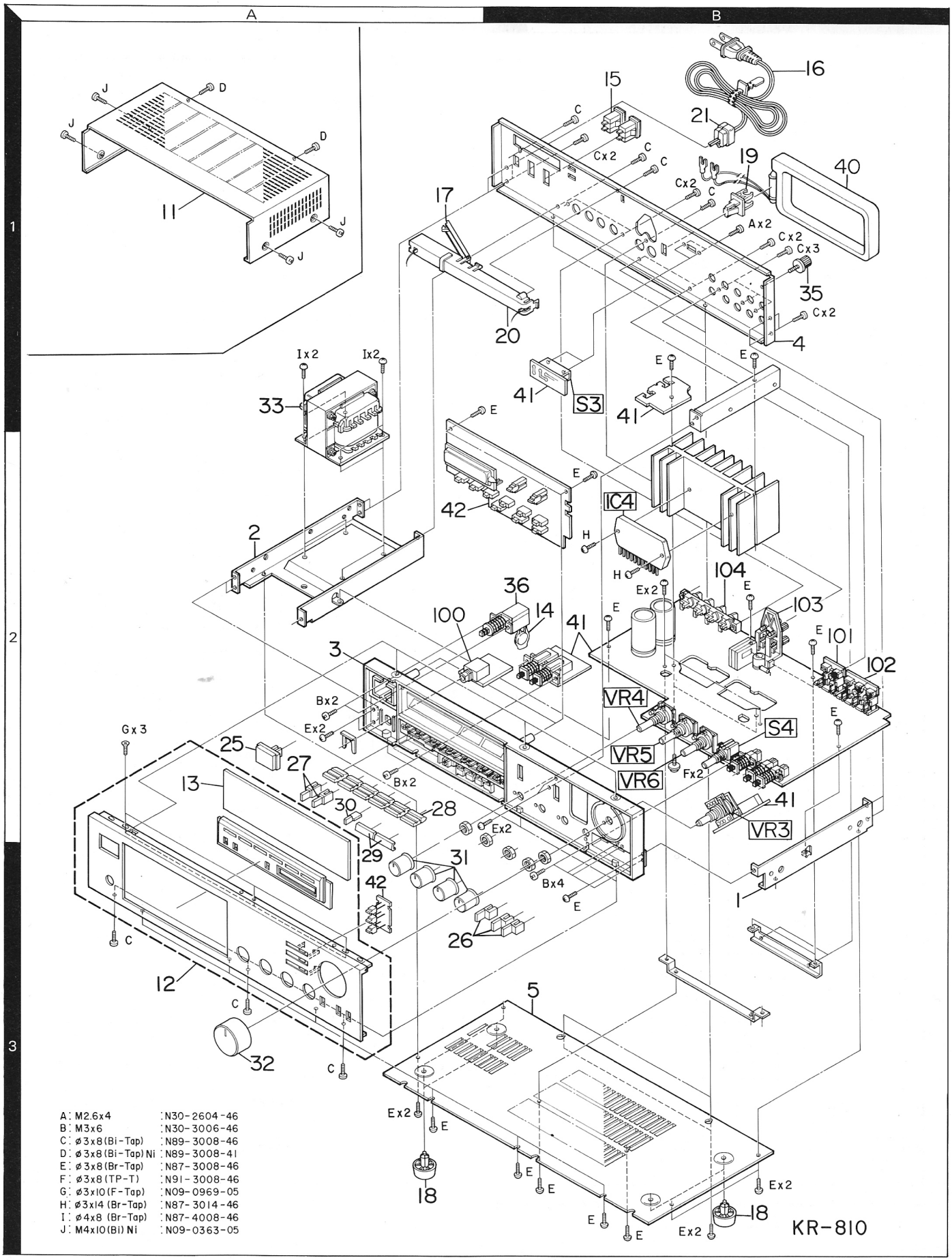

A	M2.6x4	N30-2604-46
B	M3x6	N30-3006-46
C	ø3x8(Bi-Tap)	N89-3008-46
D	ø3x8(Bi-Tap)Ni	N89-3008-41
E	ø3x8(Br-Tap)	N87-3008-46
F	ø3x8(TP-T)	N91-3008-46
G	ø3x10(F-Tap)	N09-0969-05
H	ø3x14(Br-Tap)	N87-3014-46
I	ø4x8 (Br-Tap)	N87-4008-46
J	M4x10(Bi)Ni	N09-0363-05

KR-810

PARTS LIST

★ New Parts
Parts without **Parts No.** are not supplied.
Les articles non mentionnés dans le **Parts No.** ne sont pas fournis.
Teile ohne **Parts No.** werden nicht geliefert.

Ref. No. 参照番号		Parts No. 部品番号	Description 部品名／規格	Remarks 備考
KR-810/815 (UNIT)				
1	3B	NO STOCK	METALLIC FRAME	
2	2A	NO STOCK	METALLIC FRAME	
3	2B	NO STOCK	SUB PANEL ASSY	
4	1B	NO STOCK	REAR PANEL	
5	3B	NO STOCK	BOTTOM PLATE	
11	1A	A01-0451-02	METALLIC CABINET	*
12	3A	A20-3269-02	FRONT PANEL ASSY	*K
12	3A	A20-3269-02	FRONT PANEL ASSY	PU
12	3A	A20-3269-02	FRONT PANEL ASSY	MH
12	3A	A20-3269-02	FRONT PANEL ASSY	UE
12	3A	A20-3269-02	FRONT PANEL ASSY	XE
12	3A	A20-3270-02	FRONT PANEL ASSY	*T
-		B46-0055-30	WARRANTY CARD	P
-		B46-0060-00	WARRANTY CARD	T
-		B46-0061-30	WARRANTY CARD	K
-		B46-0062-30	WARRANTY CARD	UH
-		B46-0062-30	WARRANTY CARD	UE
-		B46-0063-13	WARRANTY CARD MILITARY	UH
-		B46-0063-13	WARRANTY CARD MILITARY	UE
-		B46-0064-20	WARRANTY CARD	X
-		B46-0078-03	WARRANTY CARD	E
-		B50-4430-00	INSTRUCTION MANUAL	*K
-		B50-4431-00	INSTRUCTION MANUAL	*P
-		B50-4431-00	INSTRUCTION MANUAL	UM
-		B50-4431-00	INSTRUCTION MANUAL	HX
-		B50-4431-00	INSTRUCTION MANUAL	UE
-		B50-4432-00	INSTRUCTION MANUAL	*P
-		B50-4432-00	INSTRUCTION MANUAL	MX
-		B50-4433-00	INSTRUCTION MANUAL	*M
-		B50-4434-00	INSTRUCTION MANUAL	*T
-		B50-4435-00	INSTRUCTION MANUAL	*E
13	3A	B10-0349-04	FRONT GLASS	*
14	2B	C91-0023-05	CERAMIC 0.01UF AC250V	UM
14	2B	C91-0023-05	CERAMIC 0.01UF AC250V	HX
14	2B	C91-0023-05	CERAMIC 0.01UF AC250V	UE
14	2B	C91-0079-05	CERAMIC 0.01UF AC125V	KP
14	2B	C91-0079-05	CERAMIC 0.01UF AC125V	TE
-		E04-0006-05	COAXIAL CONNECTOR	TE
-		E06-0514-05	CYLINDRICAL RECEPTACLE	TE
-		E20-0228-05	TERMINAL BOARD	TE
15	1B	E03-0036-05	AC OUTLET	KP
15	1B	E03-0036-05	AC OUTLET	UM
15	1B	E03-0036-05	AC OUTLET	HX
15	1B	E03-0036-05	AC OUTLET	UE
16	1B	E30-0181-05	POWER CORD	KP
16	1B	E30-0459-05	POWER CORD	E
16	1B	E30-0545-05	POWER CORD	UM
16	1B	E30-0545-05	POWER CORD	UE
16	1B	E30-0545-05	POWER CORD	H
16	1B	E30-0587-15	POWER CORD	T
16	1B	E30-0649-05	POWER CORD	X
17	1A	F07-0428-03	COVER (BATTERY)	*
-		H01-3452-04	CARTON BOX	*K
-		H01-3452-04	CARTON BOX	PU
-		H01-3452-04	CARTON BOX	MH
-		H01-3452-04	CARTON BOX	UE
-		H01-3452-04	CARTON BOX	XE
-		H01-3453-04	CARTON BOX	*T
-		H10-1619-02	POLYSTYRENE FIXTURE	*
-		H20-0462-04	COVER	
-		H25-0078-04	BAG (235X315)	
18	3B	J02-0343-05	FOOT	
19	1B	J19-0626-02	ANTENNA HOLDER	
20	1B	J19-0654-03	BATTERY HOLDER	*
21	1B	J42-0083-05	BUSHING	KP
21	1B	J42-0083-05	BUSHING	UM
21	1B	J42-0083-05	BUSHING	HT
21	1B	J42-0083-05	BUSHING	UE
21	1B	J42-0083-05	BUSHING	E
21	1B	J42-0085-05	BUSHING	X
25	2A	K27-0656-14	KNOB POWER	
26	3A	K27-0715-04	KNOB TAPE	
27	2A	K27-0716-04	KNOB TUNER	
28	2A	K27-0717-04	KNOB PRESET	
29	3A	K27-0718-04	KNOB UP,DOWN	
30	2A	K27-0719-04	KNOB MEMORY	
31	3A	K29-0463-04	KNOB TONE	
32	3A	K29-0464-04	KNOB VOL.	
33	1A	L01-2781-05	POWER TRANS	*K
33	1A	L01-2786-05	POWER TRANS	*T
33	1A	L01-2786-05	POWER TRANS	E
33	1A	L01-2787-05	POWER TRANS	*U
33	1A	L01-2787-05	POWER TRANS	MH
33	1A	L01-2787-05	POWER TRANS	UE
33	1A	L01-2787-05	POWER TRANS	X
33	1A	L01-2788-05	POWER TRANS	*P
35	1B	N08-0128-35	GND TERMINAL	
-		S31-2050-05	SLIDE SWITCH	UM
-		S31-2050-05	SLIDE SWITCH	HX
-		S31-2050-05	SLIDE SWITCH	UE
-		S31-2050-05	SLIDE SWITCH	E
36	2B	S40-1022-05	PUSH SWITCH	UM
36	2B	S40-1022-05	PUSH SWITCH	HX
36	2B	S40-1022-05	PUSH SWITCH	UE
36	2B	S40-1024-05	PUSH SWITCH	KP
36	2B	S40-1025-05	PUSH SWITCH	TE
-		T90-0122-05	ANTENNA ADP.	TE
-		T90-0202-05	FM INDOOR ANTENNA	
40	1B	T90-0104-15	LOOP ANTENNA	
41	2B	X14-1370-10	RECEIVER PCB ASSY	*K
41	2B	X14-1370-10	RECEIVER PCB ASSY	P
41	2B	X14-1370-51	RECEIVER PCB ASSY	*T
41	2B	X14-1370-81	RECEIVER PCB ASSY	*U
41	2B	X14-1370-81	RECEIVER PCB ASSY	MH
41	2B	X14-1370-81	RECEIVER PCB ASSY	UE
41	2B	X14-1370-81	RECEIVER PCB ASSY	X
41	2B	X14-1372-71	RECEIVER PCB ASSY	*E
42	2A	X14-1380-10	SYNTHESIZER PCB ASSY	*K
42	2A	X14-1380-10	SYNTHESIZER PCB ASSY	P
42	2A	X14-1380-51	SYNTHESIZER PCB ASSY	*T
42	2A	X14-1380-51	SYNTHESIZER PCB ASSY	E
42	2A	X14-1380-81	SYNTHESIZER PCB ASSY	*U
42	2A	X14-1380-81	SYNTHESIZER PCB ASSY	MH
42	2A	X14-1380-81	SYNTHESIZER PCB ASSY	UE
42	2A	X14-1380-81	SYNTHESIZER PCB ASSY	X

E : Scandinavia & Europe H : Audio Club K : USA P : Canada
S : South Africa T : England U : PX (Far East, Hawaii)
UE : AAFES (Europe) X : Australia M : Other Areas

PARTS LIST

★ New Parts
Parts without **Parts No**. are not supplied.
Les articles non mentionnés dans le **Parts No**. ne sont pas fournis.
Teile ohne **Parts No**. werden nicht geliefert.

RECEIVER (X14-1370-10)

Ref. No. 参照番号	Parts No. 部品番号	Description 部品名／規格	Remarks 備考
C1	C55-1722-38	CERAMIC 0.022UF Z	
C2	C24-1222-77	ELECTRO 220UF 16WV	
C3 ,4	C91-0083-05	CERAMIC 0.01UF N	
C5	C24-1222-67	ELECTRO 22UF 16WV	
C6 -8	C91-0085-05	CERAMIC 0.022UF N	
C9	C24-1710-57	ELECTRO 1UF 50WV	
C10	C52-1733-16	CERAMIC 330PF K	
C11	C91-0085-05	CERAMIC 0.022UF N	
C12	C24-1747-47	ELECTRO 0.47UF 50WV	
C13 ,14	C91-0083-05	CERAMIC 0.01UF N	
C15	C24-1747-47	ELECTRO 0.47UF 50WV	
C16	C91-0083-05	CERAMIC 0.01UF N	
C17	C24-1247-67	ELECTRO 47UF 16WV	
C18 ,19	C24-1210-67	ELECTRO 10UF 16WV	TE
C20	C26-1247-57	NP-ELEC 4.7UF 16WV	
C40	C24-1210-77	ELECTRO 100UF 16WV	
C41 ,42	C24-1210-67	ELECTRO 10UF 16WV	
C43 ,44	C46-1747-26	MYLAR 0.0047UF K	U
C45 ,46	C46-1715-26	MYLAR 0.0015UF K	TE
C45 ,46	C46-1722-26	MYLAR 0.0022UF K	KU
C47	C24-1722-57	ELECTRO 2.2UF 50WV	
C48	C24-1722-57	ELECTRO 2.2UF 50WV	
C49	C46-1747-36	MYLAR 0.047UF K	
C50	C47-1747-15	POLYSTY 470PF J	
C51	C24-1710-57	ELECTRO 1UF 50WV	
C52	C24-1710-57	ELECTRO 1UF 50WV	
C53	C24-1710-57	ELECTRO 1UF 50WV	
C54	C71-1768-05	CERAMIC 68PF J	
C55 ,56	C24-1747-57	ELECTRO 4.7UF 50WV	
C57	C26-1422-57	NP-ELEC 2.2UF 25WV	
C58	C24-1222-67	ELECTRO 22UF 16WV	
C80	C24-1210-77	ELECTRO 100UF 16WV	
C81	C55-1722-38	CERAMIC 0.022UF Z	
C82	C91-0083-05	CERAMIC 0.01UF N	
C83	C53-1710-27	CERAMIC 0.001UF M	
C84	C91-0085-05	CERAMIC 0.022UF N	
C85	C24-1247-67	ELECTRO 47UF 16WV	
C86	C55-1722-38	CERAMIC 0.022UF Z	
C87	C70-1722-05	CERAMIC 22PF J	
C88	C47-1743-15	POLYSTY 430PF J	
C89	C55-1747-38	CERAMIC 0.047UF Z	
C90	C24-1747-57	ELECTRO 4.7UF 50WV	
C91	C24-1710-57	ELECTRO 1UF 50WV	
C92	C91-0083-05	CERAMIC 0.01UF N	
C93	C24-1710-57	ELECTRO 1UF 50WV	
C94	C55-1722-38	CERAMIC 0.022UF Z	
C95	C46-1710-26	MYLAR 0.001UF K	
C96	C46-1722-36	MYLAR 0.022UF K	
C97	C91-0083-05	CERAMIC 0.01UF N	
C98	C53-1710-27	CERAMIC 0.001UF M	
C99	C46-1739-36	MYLAR 0.039UF K	
C101,102	C71-1733-05	CERAMIC 33PF J	E
C103,104	C25-6533-57	LL-ELEC 3.3UF 35WV	
C105,106	C71-1718-15	CERAMIC 180PF J	
C107,108	C52-1722-26	CERAMIC 0.0022UF K	E
C109,110	C24-1047-67	ELECTRO 47UF 10WV	
C111,112	C46-1733-25	MYLAR 0.0033UF J	
C113,114	C46-1712-35	MYLAR 0.012UF J	
C115,116	C25-1722-57	LL-ELEC 2.2UF 50WV	
C117,118	C24-1210-77	ELECTRO 100UF 16WV	
C119-125	C52-1756-16	CERAMIC 560PF K	E
C123-125	C52-1756-16	CERAMIC 560PF K	KU
C123-125	C52-1756-16	CERAMIC 560PF K	T
C126	C55-1722-38	CERAMIC 0.022UF Z	E
C127,128	C46-1718-36	MYLAR 0.018UF K	
C129,130	C25-1722-57	LL-ELEC 2.2UF 50WV	
C131,132	C52-1747-16	CERAMIC 470PF K	
C133,134	C71-1710-15	CERAMIC 100PF J	E
C135,136	C71-1702-01	CERAMIC 2PF C	KU
C135,136	C71-1702-01	CERAMIC 2PF C	T
C135,136	C71-1705-01	CERAMIC 5PF C	E
C137,138	C71-1701-01	CERAMIC 1PF C	E
C137,138	C71-1703-01	CERAMIC 3PF C	KU
C137,138	C71-1703-01	CERAMIC 3PF C	T
C139,140	C24-1447-67	ELECTRO 47UF 25WV	
C141,142	C24-1210-67	ELECTRO 10UF 16WV	
C143,144	C24-1010-77	ELECTRO 100UF 10WV	
C145,146	C26-1210-67	NP-ELEC 10UF 16WV	
C147,148	C46-1747-26	MYLAR 0.0047UF K	
C149,150	C46-1715-36	MYLAR 0.015UF K	
C151,152	C46-1768-36	MYLAR 0.068UF K	
C153,154	C52-1733-16	CERAMIC 330PF K	
C155,156	C46-1715-26	MYLAR 0.0015UF K	
C157,158	C46-1722-36	MYLAR 0.022UF K	
C159	C24-6510-67	ELECTRO 10UF 35WV	
C160	C24-6522-77	ELECTRO 220UF 35WV	
C161	C24-1710-57	ELECTRO 1UF 50WV	
C162	C24-6547-67	ELECTRO 47UF 35WV	
C163	C24-1747-57	ELECTRO 4.7UF 50WV	
C164	C24-6533-67	ELECTRO 33UF 35WV	
C165	C24-6510-67	ELECTRO 10UF 35WV	
C166	C24-1710-67	ELECTRO 10UF 50WV	
C167,168	C90-0412-05	ELECTRO 6800UF 35WV	
C169,170	C54-2710-39	CERAMIC 0.01UF P	
C171,172	C46-1747-36	MYLAR 0.047UF K	
C173	C24-1247-67	ELECTRO 47UF 16WV	
C174	C24-1010-77	ELECTRO 100UF 10WV	
C175,176	C52-1722-26	CERAMIC 0.0022UF K	E
C177	C24-1810-67	ELECTRO 10UF 63WV	
C178	C55-1747-38	CERAMIC 0.047UF Z	
TC1	C05-0088-05	TRIMMER CAPACITOR	*
-	E23-0104-05	TERMINAL	TE
100 2A	E11-0105-05	PHONE JACK	*
101 2B	E13-0432-05	PHONO JACK	
102 2B	E13-0618-05	PHONO JACK	
103 2B	E20-0438-05	TERMINAL BOARD ANT	
104 2B	E20-0450-05	TERMINAL BOARD SPEAKER	*
F1	F05-2023-05	FUSE 250V 2A	U
F1	F05-2029-05	FUSE 250V F2A	E
F1	F06-2027-05	FUSE 250V 2A	K
F2	F05-1023-05	FUSE 250V 1A	U
F2	F06-1021-05	FUSE 250V F1A	TE
-	J13-0055-05	FUSE HOLDER	
-	L79-0147-05	FILTER KIT	TE
CF1	L72-0133-05	CERAMIC FILTER	TE
CF1 ,2	L72-0138-05	CERAMIC FILTER	KU
CF2	L72-0128-05	CERAMIC FILTER	TE
CF3	L72-0099-05	CERAMIC FILTER	
CF4	L72-0096-05	CERAMIC FILTER	
L1	L30-0327-15	IFT	

For RECEIVER
K : X14-1370-10 U : X14-1370-81
T : X14-1370-51 E : X14-1372-71

PARTS LIST

★ New Parts
Parts without **Parts No.** are not supplied.
Les articles non mentionnés dans le **Parts No.** ne sont pas fournis.
Teile ohne **Parts No.** werden nicht geliefert.

Ref. No. 参照番号	Parts No. 部品番号	Description 部品名／規格	Remarks 備考
L2	L30-0328-05	IFT	
L3	L31-0455-05	RF COIL	
L4	L32-0258-05	OSCILLATING COIL	
L5	L30-0362-05	IFT	
L6	L79-0109-05	FILTER L.P.F	TE
L7	L79-0140-05	FILTER	
R2	R42-1268-05	FL-PROOF RD68 J 2E	
R8	R42-1210-15	FL-PROOF RD100 J 2E	
R16	R42-1210-15	FL-PROOF RD100 J 2E	
R40	R42-1210-15	FL-PROOF RD100 J 2E	
R85	R42-1210-15	FL-PROOF RD100 J 2E	
R86	R42-1215-15	FL-PROOF RD150 J 2E	
R119,120	R42-1210-15	FL-PROOF RD100 J 2E	
R135,136	R40-8333-26	RC 3.3K K 2H	
R143,144	R92-0166-05	METAL-PLATE0.22 K 3D	
R155	R43-1247-95	FL-PROOF RD4.7 J 2E	
R158	R42-1247-95	FL-PROOF RD4.7 J 2E	
R161,162	R47-5456-15	FL-PROOF RS560 J 3A	
R163	R42-1222-25	FL-PROOF RD2.2K J 2E	
R165	R47-5422-25	FL-PROOF RS2.2K J 3A	
R166	R40-8312-26	RC 1.2K K 2H	
R167	R43-1247-95	FL-PROOF RD4.7 J 2E	UT
R167	R43-1247-95	FL-PROOF RD4.7 J 2E	E
R167	R92-0514-05	FUSE-RESIST4.7 2E	K
R168	R47-5533-15	FL-PROOF RS330 J 3D	
R175,176	R47-5447-95	FL-PROOF RS4.7 J 3A	
R177	R92-0173-05	RC 2.2M M 2H	K
VR1	R12-4302-05	TRIMMING POT. 50K	TE
VR1	R12-5302-05	TRIMMING POT. 100K	KU
VR2	R12-2302-05	TRIMMING POT. 5K	
VR3	R06-5068-05	POTENTIOMETER VOL.	
VR4 ,5	R06-4057-05	POTENTIOMETER TONE.	
VR6	R01-5038-05	POTENTIOMETER BAL.	
S1	S42-2064-15	PUSH SWITCH	
S2 ,3	S31-2072-05	SLIDE SWITCH	U
S3	S31-2072-05	SLIDE SWITCH	K
S4	S29-4012-05	ROTARY WAFER SWITCH	*
S5	S40-2153-15	PUSH SWITCH	
S6	S42-2076-05	PUSH SWITCH	
D1	V11-1200-80	1SS53	KU
D1 -4	V11-1200-80	1SS53	TE
D3 -8	V11-1200-80	1SS53	KU
D6 -8	V11-1200-80	1SS53	TE
D9	V11-7702-50	KV1236(Z1)	
D10	V11-1200-80	1SS53	
D11 -14	V11-1301-40	S2V20*1	
D15 ,16	V11-0295-05	W06B	
D17	V11-4108-50	WZ-250	
D18	V11-1200-80	1SS53	
D19	V11-0254-05	YZ-140	
D20	V11-4103-60	XZ-051	
D21	V11-0295-05	W06B	
D22 ,23	V11-1200-80	1SS53	
D24	V11-4101-20	XZ-060	
IC1	V30-0321-10	HA11225	
IC2	V30-0688-10	UPC1235C	
IC3	V30-0519-10	LA1245	
IC4	V30-0836-10	STK-460A	*
IC5	V30-0405-10	AN6552	
Q1	V03-1675-00	2SC1675	
Q2 -5	V08-0289-10	JC501(P)	TE
Q4 ,5	V08-0289-10	JC501(P)	KU
Q6	V08-0287-10	JA101(P)	
Q7	V08-0289-10	JC501(P)	
Q8	V08-0287-10	JA101(P)	
Q9 -12	V08-0289-10	JC501(P)	
Q13 ,14	V08-0287-10	JA101(P)	
Q15	V04-0330-00	2SD330	
Q16 ,17	V08-0289-10	JC501(P)	
-	W02-0507-05	FM FRONT END	*K
-	W02-0507-05	FM FRONT END	U
-	W02-0508-05	FM FRONT END	*T
-	W02-0508-05	FM FRONT END	E
SYNTHESIZER (X14-1380-10)			
D30	B30-0379-05	LAMP	
D31	B30-0378-05	LAMP	
D32 -34	B30-0231-05	LAMP	
C1	C24-1010-77	ELECTRO 100UF 10WV	
C2	C55-1710-38	CERAMIC 0.01UF Z	
C3	C24-1247-67	ELECTRO 47UF 16WV	
C4	C24-1233-67	ELECTRO 33UF 16WV	
C6	C26-1422-57	NP-ELEC 2.2UF 25WV	
C7	C46-1710-36	MYLAR 0.01UF K	
C8	C24-1747-57	ELECTRO 4.7UF 50WV	
C9 ,10	C55-1710-38	CERAMIC 0.01UF Z	
C11	C24-1010-77	ELECTRO 100UF 10WV	
C12 ,13	C55-1710-38	CERAMIC 0.01UF Z	
C14 ,15	C63-1733-05	CERAMIC 33PF J	
C16	C24-0847-77	ELECTRO 470UF 6.3WV	
C17	C55-1710-38	CERAMIC 0.01UF Z	
C18	C24-1047-67	ELECTRO 47UF 10WV	
C19	C24-6547-67	ELECTRO 47UF 35WV	
X1	L77-0573-05	CRYSTAL RESONATOR	
CP1	R90-0203-05	MULTIPLE COMPONENTS	*
CP2	R90-0202-05	MULTIPLE COMPONENTS	*
R11	R42-1368-15	FL-PROOF RD680 J 2H	
R15	R42-1210-15	FL-PROOF RD100 J 2E	
R26	R42-1256-05	FL-PROOF RD56 J 2E	
R42	R42-1210-15	FL-PROOF RD100 J 2E	
S1 -9	S40-1053-05	PUSH SWITCH	
D1	V11-4101-50	XZ-062	
D3 -7	V11-1200-80	1SS53	K
D3 -15	V11-1200-80	1SS53	UT
D9 -15	V11-1200-80	1SS53	K
D16 ,17	V11-1200-80	1SS53	
D18	V11-1200-80	1SS53	
D19	V11-4101-20	XZ-060	
D20 -22	V11-1200-80	1SS53	
FIP	V40-4401-40	FIP7D8C	*
IC1	V30-0770-10	UPD1703C-018	
IC2	V30-0626-10	UPB553AC	
Q1	V03-1841-00	2SC1841	
Q2 ,3	V08-0289-10	JC501(P)	
Q4	V08-0287-10	JA101(P)	
Q5 -9	V08-0289-10	JC501(P)	KU
Q5 -8	V08-0289-10	JC501(P)	T
Q10 -14	V08-0287-10	JA101(P)	

For RECEIVER
K : X14-1370-10 U : X14-1370-81
T : X14-1370-51 E : X14-1372-71

For SYNTHESIZER
K : X14-1380-10 U : X14-1380-81
T : X14-1380-51

WORLD MAP & AREA CODE

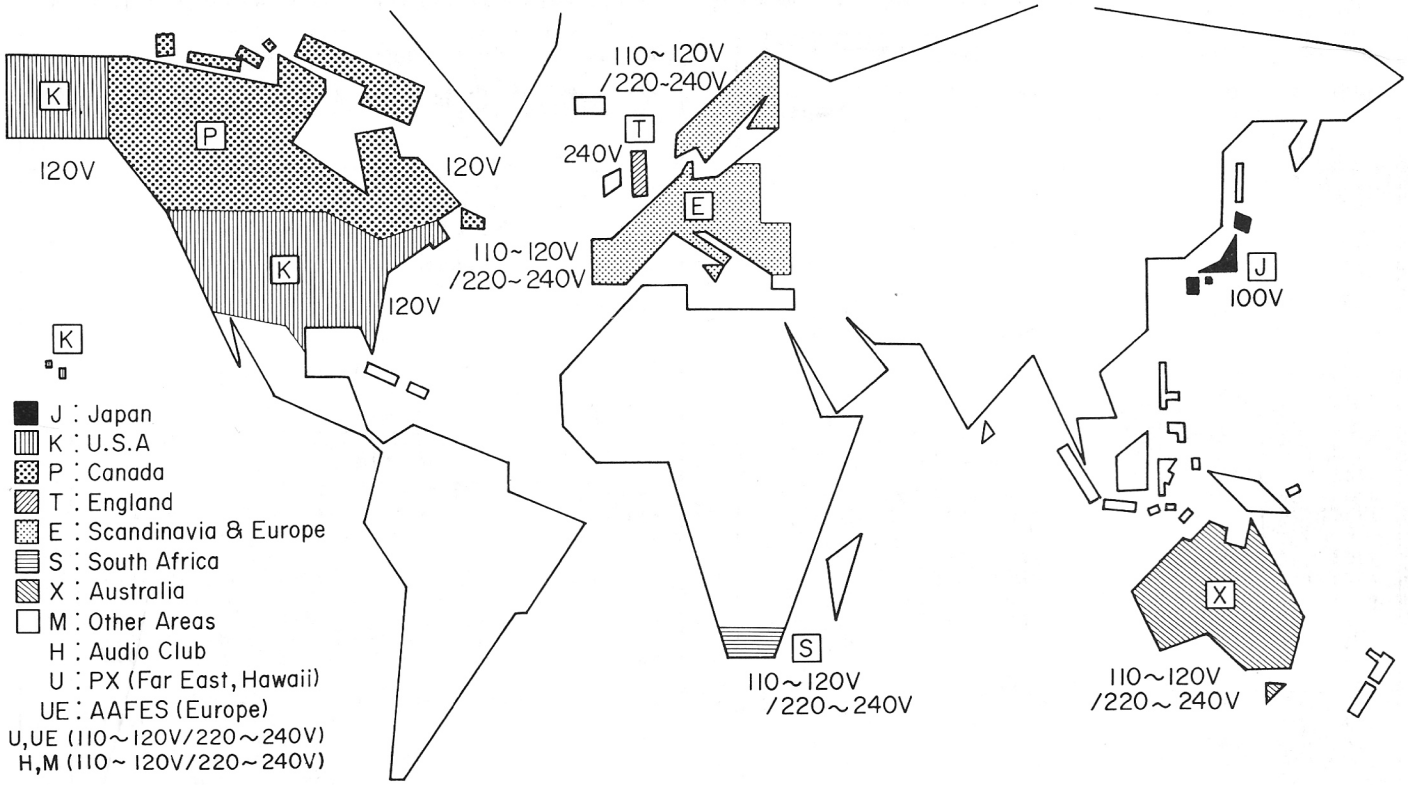

Note:

Component and circuitry are subject to modification to insure best operation under differing local conditions. This manual is based on, the U.S. (K) standard, and provides information on regional circuit modification through use of alternate schematic diagrams, and information on regional component variations through use of parts list.

A product of

TRIO-KENWOOD CORPORATION

Shionogi Shibuya Building, 17-5, 2-chome Shibuya, Shibuya-ku, Tokyo 150 Japan

KENWOOD U.S.A. CORPORATION
1315 E, Watsoncenter Rd, Carson, California 90745, U.S.A.
75 Seaview Drive, Secaucus, New Jersey 07094, U.S.A.
TRIO-KENWOOD CANADA INC.
1070 Jayson Court, Mississauga, Ontario, Canada L4W 2V5
TRIO-KENWOOD ELECTRONICS, N.V.
Leuvensesteenweg 504 , B-1930 Zaventem, Belgium
TRIO-KENWOOD ELECTRONICS, GmbH
Rudolf-Braas-Str. 20, 6056 Heusenstamm, West Germany
TRIO-KENWOOD FRANCE S.A.
5, Boulevard Ney, 75018 Paris, France
TRIO-KENWOOD AG
Unterboesh 6331 Huenenberg/ZUG Switzerland
TRIO-KENWOOD (AUSTRALIA) PTY. LTD.
4E Woodcock Place, Lane Cove. N.S.W. 2066, Australia
KENWOOD & LEE ELECTRONICS, LTD.
Wang Kee Building, 5th Floor, 34-37, Connaught Road, Central, Hong Kong