KENWOOD

KX-71R
KX-71RB

STEREO CASSETTE DECK

SERVICE MANUAL

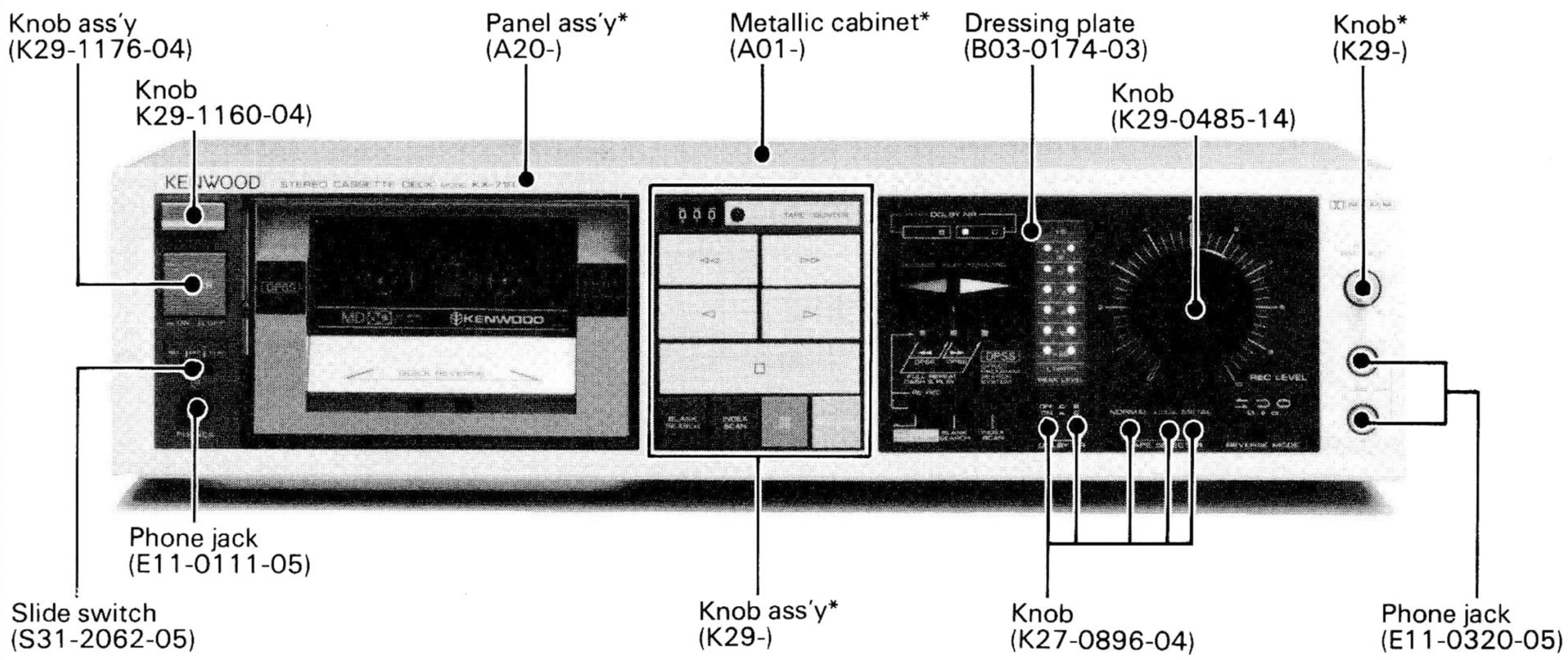

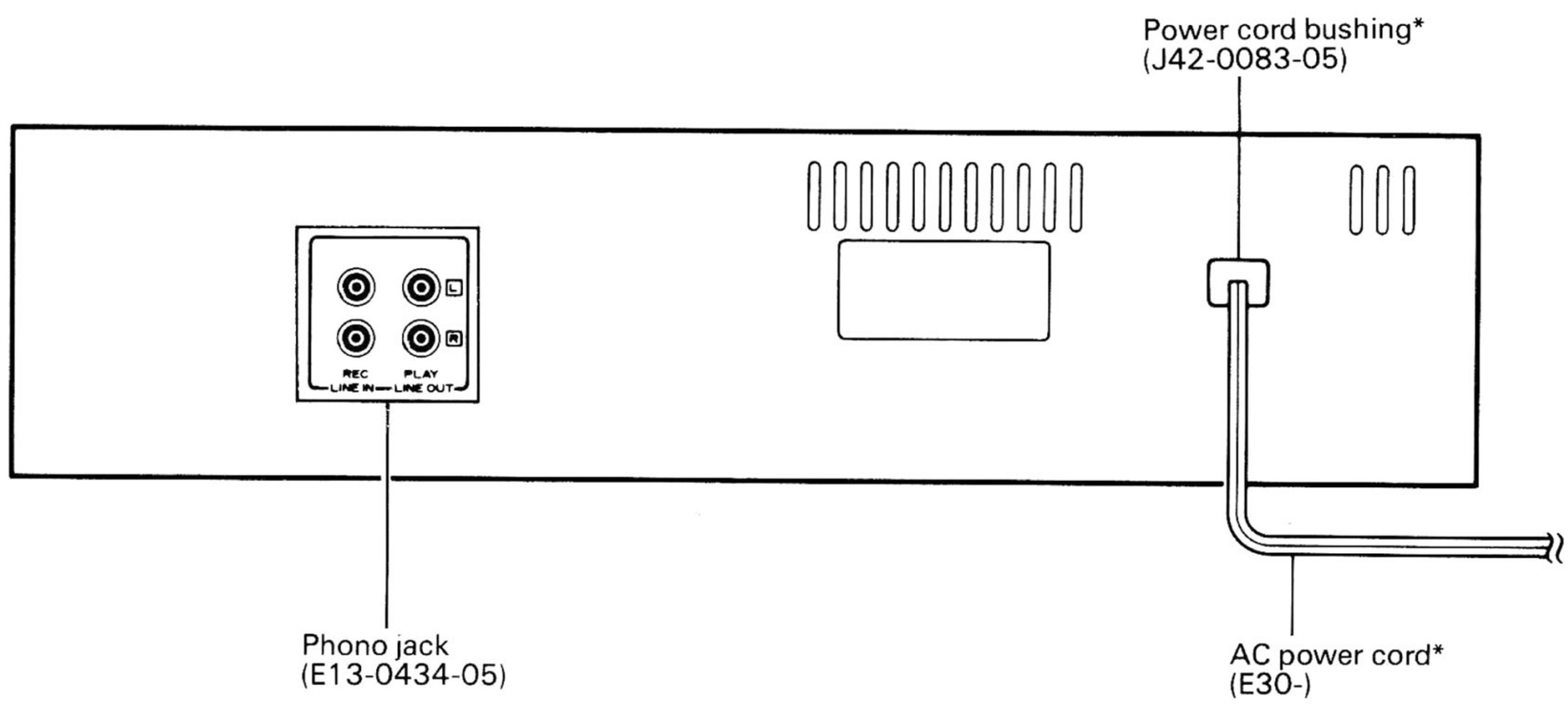

*Refer to parts list on page 11.

www.hifiengine.com

ADJUSTMENT

0 dBs = 0.775V

NO.	ITEM	INPUT SETTINGS	OUTPUT SETTINGS	CASSETTE TAPE DECK SETTINGS	ALIGNMENT POINTS	ALIGN FOR	FIG.
CASSETTE DECK SECTION							
REC/PLAY HEAD							
[1]	**DEMAGNETI-ZATION**	–	–	POWER: OFF Remove the cassette door.	REC/PLAY head	Demagnetize the REC/PLAY head with a head demagnetizer.	
[2]	**CLEANING**	–	–	PLAY	REC/PLAY head erase head, capstan, pinch roller	Clean the REC/PLAY head erase head, capstan and picnh roller using a cotton swab slightly damped with alcohol.	
[3]	**AZIMUTH**	MTT-256 10 kHz –20 dB	(A)	FORWARD PLAY REVERSE PLAY	Azimuth adjust-ment screw	Adjust the azimuth adjust-ment screw so that both channel outpu levels are max-imized for FORWARD and REVERSE PLAY, then lock the screw with adhesive.	(a)
DC MOTOR							
(i)	**TAPE SPEED**	MTT-111	(B)	PLAY	Trimming potentiometer in the DC motor (for capstan drive)	Frequency: 3000 Hz	
PC BOARD (X28-1540-00)							
(1)	**PLAYBACK LEVEL**	MTT-256 315 Hz 0 dB	(A)	PLAY	VR3(L) VR4(R)	Output level: –9 dBs	
(2)	**RECORD LEVEL**	(C) 1 kHz –10 dBs	(A)	Rec → Playback	VR5(L) VR6(R)	Adjust line REC LEVEL potentiometer so that the output at LINE OUT of –9 dBs is obtaind. After recording, playback and check so that the output of LINE OUT is –9 dBs.	
(3)	**BIAS CURRENT**	(C) 1 kHz, –30 dBs 10 kHz, –30 dBs	(A)	Record 1 kHz, 10 kHz signal alternately and playback.	VR7(L) VR8(R)	Adjust VR7 (VR8) so that the playback output level of 10 kHz is equal to that of 1 kHz.	
(4)	**LED PEAK LEVEL METER**	(C) 1 kHz –10 dBs	(A)	REC PAUSE	VR9(L) VR10(R)	Adjust LINE REC LEVEL so that output at LINE OUT of –9 dBs is obtained. Adjust VR9 (VR10) so that 0 dB LED segment is completely lit.	

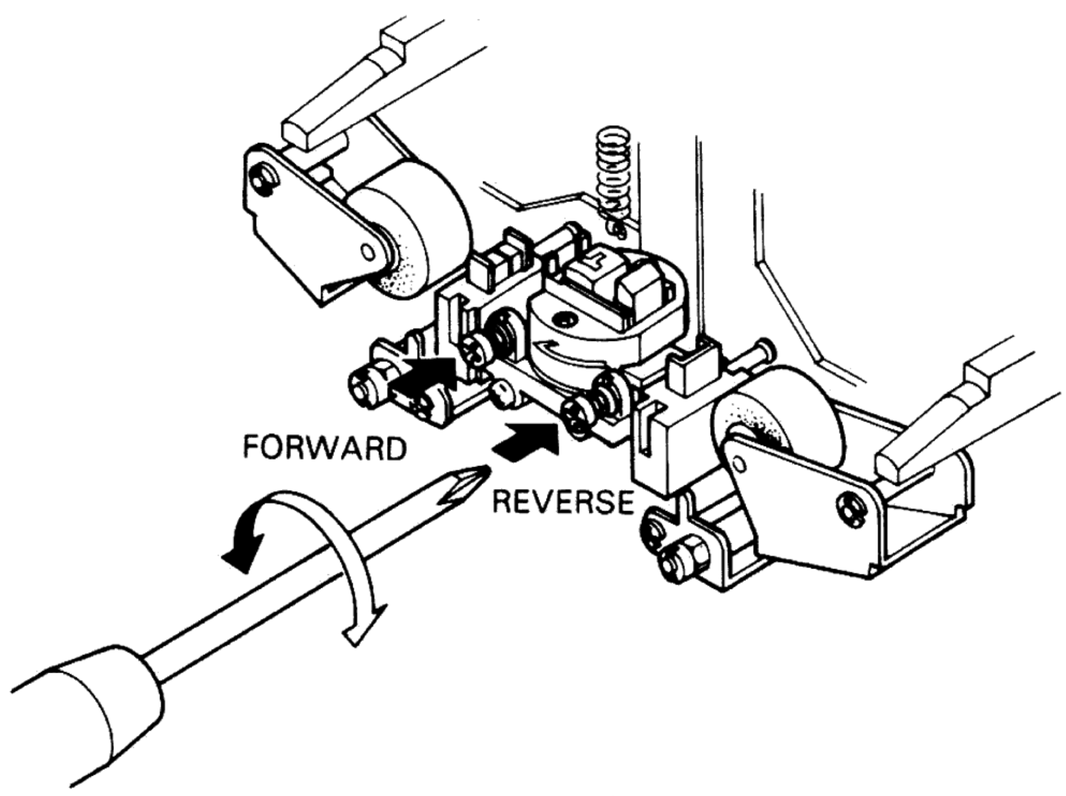

(a)

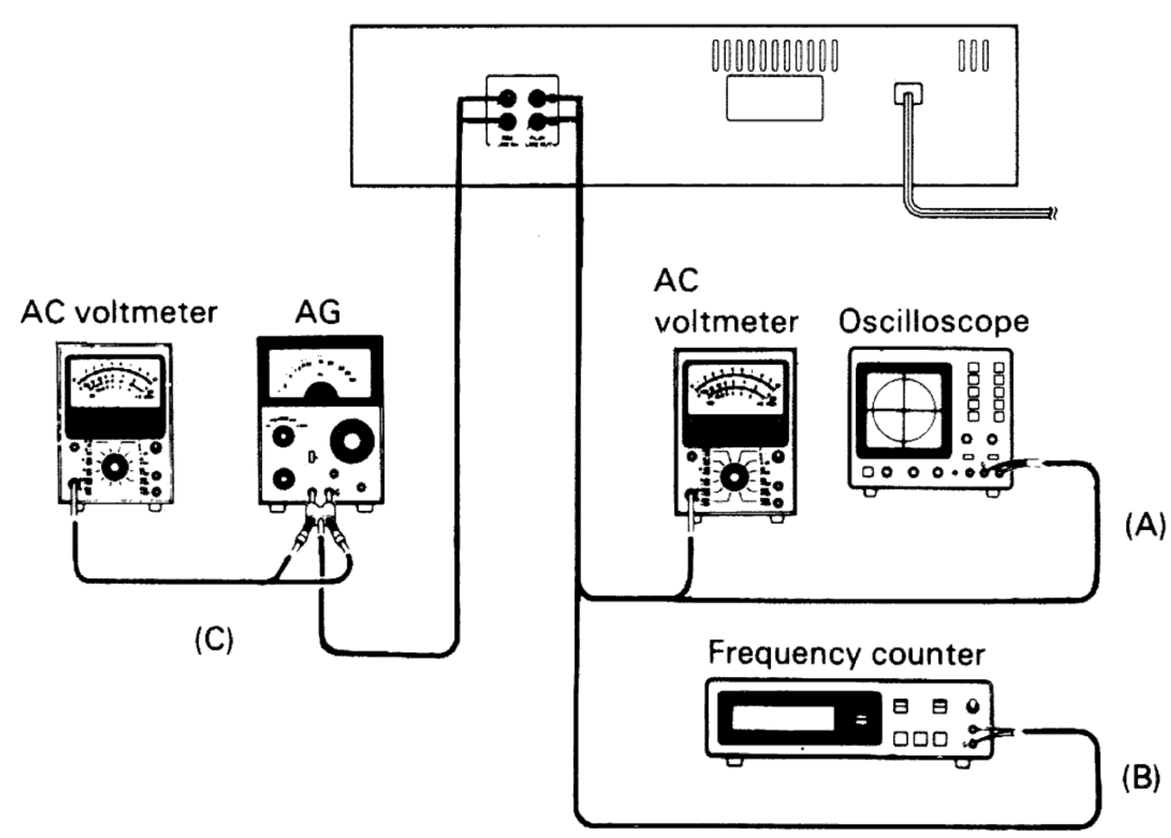

www.hifiengine.com

REGLAGES

0 dBs = 0,775V

Nº	ITEM	REGLAGE DE L'ENTREE	REGLAGE DE LA SORTIE	REGLAGE DU MAGNETOPHONE A CASSETTE	POINTS L'ALIGNMENT	ALIGNER POUR	FIG.
SECTION DU MAGNETOPHONE				TAPE SELECTEUR DE TYPE DE BAND: NORMAL			
TETE DE ENREGISTREMENT/LECTURE							
[1]	**DEMAGNETISA-TION**	–	–	POWER: OFF Élogner la porte.	Tête de ENREGISTRE-MENT/ LECTURE.	Demagnittiser la tête de ENREGISTREMENT/ LECTURE avec un démagnétiseur de tête.	
[2]	**NETTOYAGE**	–	–	PLAY	Tête de EN-REGISTREMENT/ LECTURE. Tête de efface-ment, cabestan, Galet-presseur.	Nettoyer la tête de EN-REGISTREMENT/LECTURE, la tête déffacement, le cabestan et le galetpresseur avec un coton-tige légèrement imbibé alcool.	
[3]	**AZIMUT**	MTT-256 10 kHz –20 dB	(A)	FORWARD PLAY REVERSE PLAY	Vis d'azimut	Régler la vis d'azimut en sorte que les deux niveaux de sortie de canal soient au maximum pour FORWARD et RVERSE PLAY, puis bloquer la vis avec l'adhésif.	(a)
MOTEUR CC							
(i)	**VITESSE DE DEFILEMENT**	MTT-111	(B)	PLAY	Résistance adjustable du moteur CC (pour entraînement du cabestan)	Fréquence: 3000 Hz	
PLAQUE IMPRIMEE (X28-1540-00)							
(1)	**NIVEAU DE LECTURE**	MTT-256 315 Hz 0 dB	(A)	PLAY	VR3(G) VR4(D)	Niveau de sortie: –9 dBs	
(2)	**NEVEAU D'ENREGISTRE-MENT**	(C) 1 kHz –10 dBs	(A)	Enregistrement → Lecture	VR5(G) VR6(D)	Régler le potentiomètre LINE REC LEVEL de façon á obtenir une LINE OUT de –9 dBs. Après l'enregistre-ment faire la lecture et vérifier que la LINE OUT soit comprise entre–9dBs.	
(3)	**COURANT DE POLARISATION**	(C) 1 kHz, –30 dBs 10 kHz, –30 dBs	(A)	Enregister alternative-ment les signaux de 1 kHz et 10 kHz, puis faire la lecture.	VR7(G) VR8(D)	Régler VR7 (VR8) en sorte que le niveau de sortie de lecture de 10 kHz égale celui de 1 kHz.	
(4)	**INDICATEUR DE NIVEAU DE CRETE A DIODE LED**	(C) 1 kHz –10 dBs	(A)	REC PAUSE	VR9(G) VR10(D)	Réguler LINE REC LEVEL de façon qu on puisse obtenir LINE OUT de –9 dBs. Ajuster VR9 (VR10) de daçon que le segment de diode LED 0 dB soit complètement allumé.	

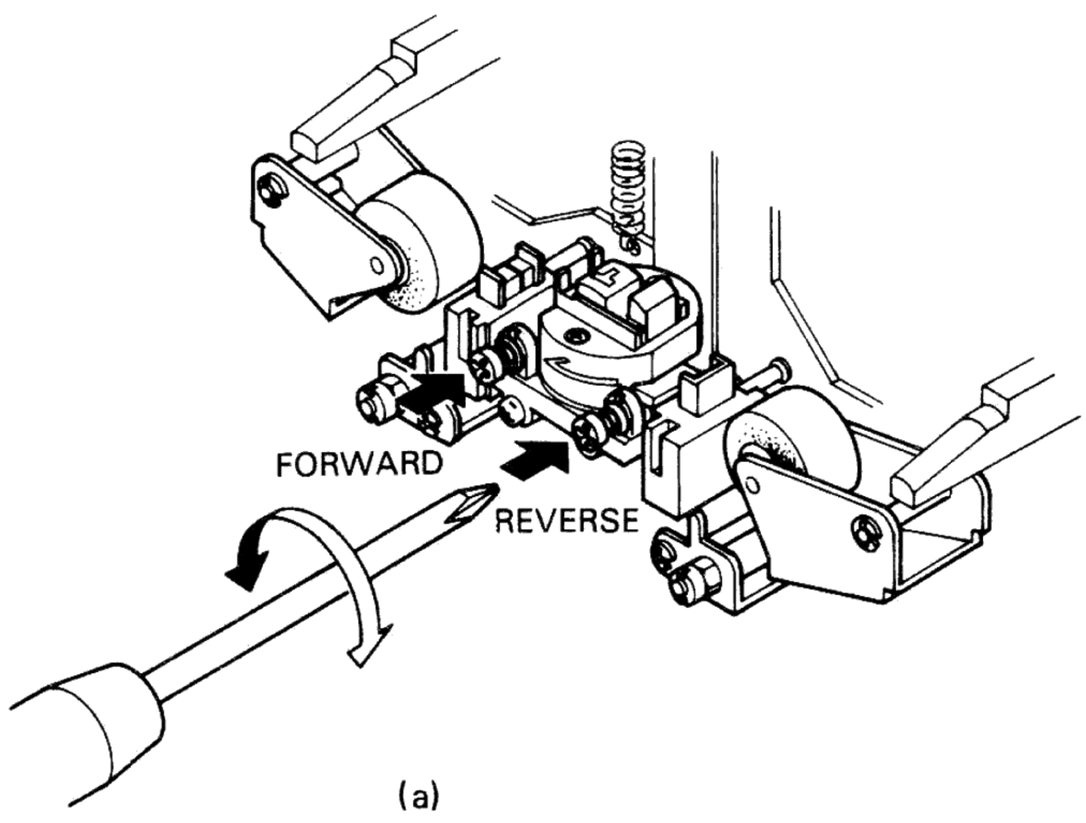

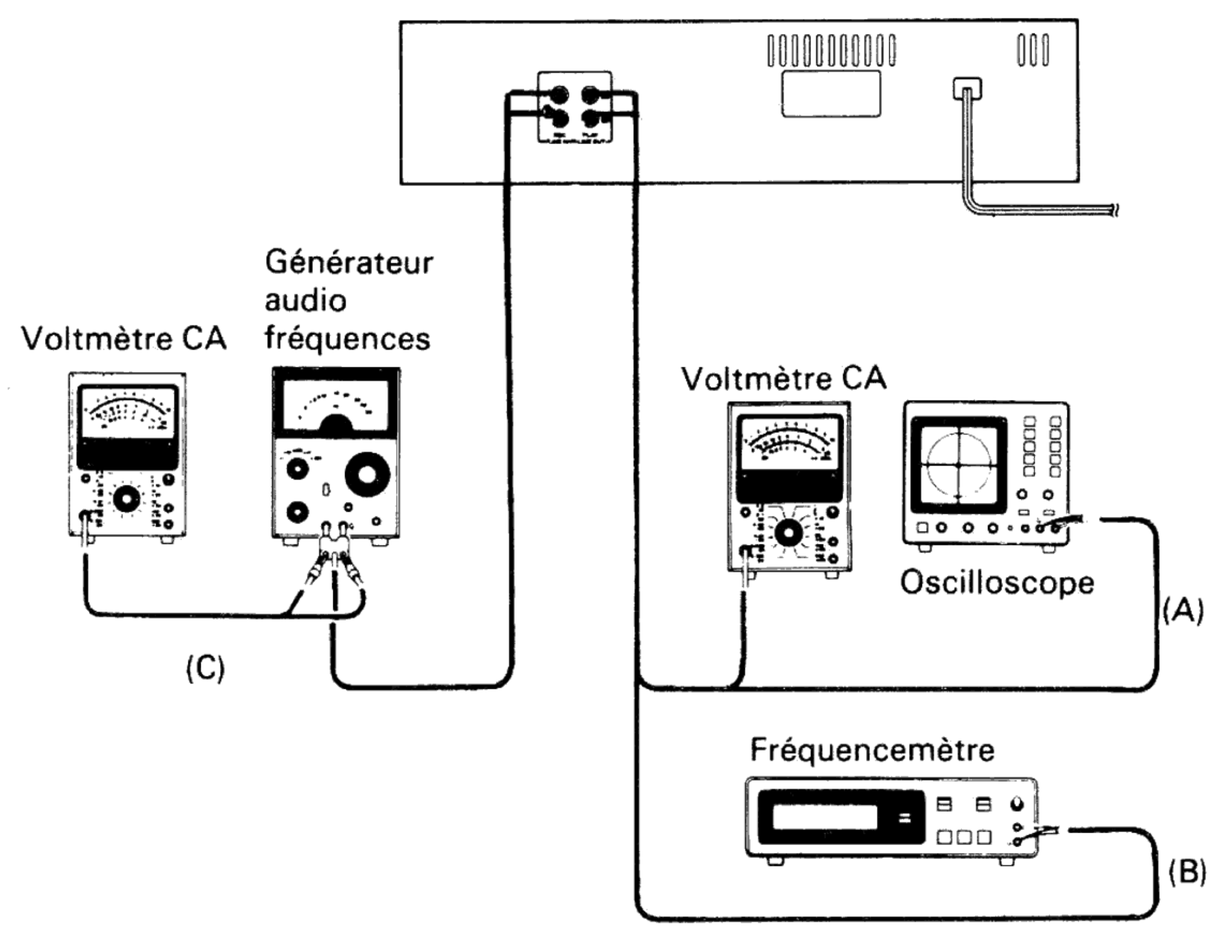

www.hifiengine.com

ABGLEICH

0 dBs = 0,775V

NR.	GEGENSTAND	EINGANGS-EINSTELLUNG	AUSGANGS-EINSTELLUNG	KASSETTEN-GERÄT-EINSTELLUNG	ABGLEICH-PUNKTE	ABGLEICHEN FÜR	ABB.
CASSETTEN-DECK-ABTEILUNG				TAPE BANDSORTENWÄHLER: NORMAL			
AUFNAHME/WIEDERGABE-KOPF							
[1]	**ENTMAGNETI-SIERUNG**	–	–	POWER: OFF Den Kassettenfach deckel oven herauszeihen.	AUFNAHME/ WIEDERGABE-Kopf	Entmagnetisierung von dem AUFNAHME/WIEDERGABE-Kopf mit einem Tonkopf Entmagnetisierungsdrossel.	
[2]	**REINGUNG**	–	–	PLAY	AUFNAHME/ WIEDERGABE-Kopf, Löschkopf, Tonwelle, Andruckrolle	AUFNAHME/WIEDERGABE-Kopf, Löschkopf, Tonwelle und Andruckrolle mit einem leicht mit Alkohol befeuchteten Wattebausch reiningn.	
[3]	**AZIMUTH-EINSTELLUNG**	MTT-256 10 kHz –20 dB	(A)	FORWARD PLAY REVERSE PLAY	Azimuth-Einstellschraube	Einstellung von Azimuth Einstellschraube so daß deide Kanal Ausgangspegel maximal sind für FORWARD und REVERSE PLAY, dann die Schraube mit Klebstoff festlegen.	(a)
GLEICHSTROMMOTOR							
(i)	**BANDGESCH-WINDIGKEIT**	MTT-111	(B)	PLAY	Trimmer potentiometer am Gleichstrommotor (für Tonwellenantreieb)	Frequenz: 3000 Hz	
GEDRUCKTE SCHALTPLATTE (X28-1540-00)							
(1)	**WIEDERGABE-PEGEL**	MTT-256 315 Hz 0 dB	(A)	PLAY	VR3(L) VR4(R)	Ausgangspegel: –9 dBs	
(2)	**AUFNAHME-PEGEL**	(C) 1 kHz –10 dBs	(A)	Aufnahme → Wiedergabe	VR5(L) VR6(R)	Stellen Sie LINE REC LEVEL so ein, daß man bei LINE OUT einen Ausgang von –9 dBs erhält. Drauf Aufnahme, Wiedergabe und stellen Sie sicher, daß der Ausgang von LINE OUT –9 dBs liegt. Wenn dieser Pegel nicht erreicht ist, nechstellen Sie VR5 (VR6) ein.	
(3)	**LEERLAUF-STROM**	(C) 1 kHz, –30 dBs 10 kHz, –30 dBs	(A)	Aufnehmen das Signal von 1 kHz und 10 kHz abwechselnd und Vorlesung	VR7(L) VR8(R)	Abgleich von VR7 (VR8) so daß der Abspiel-Ausgangspegel von 10 kHz dem von 1 kHz gleich ist.	
(4)	**LED-SPITZEN-PEGELMESSER**	(C) 1 kHz –10 dBs	(A)	REC PAUSE	VR9(L) VR10(R)	Stellen Sie LINE REC LEVEL so ein, daß man bei LINE OUT einen Ausgang von –9 dBs erhält. Stellen Sie VR9 (VR10) so ein, daß das 0 dB-Segment vollständig leuchtet.	

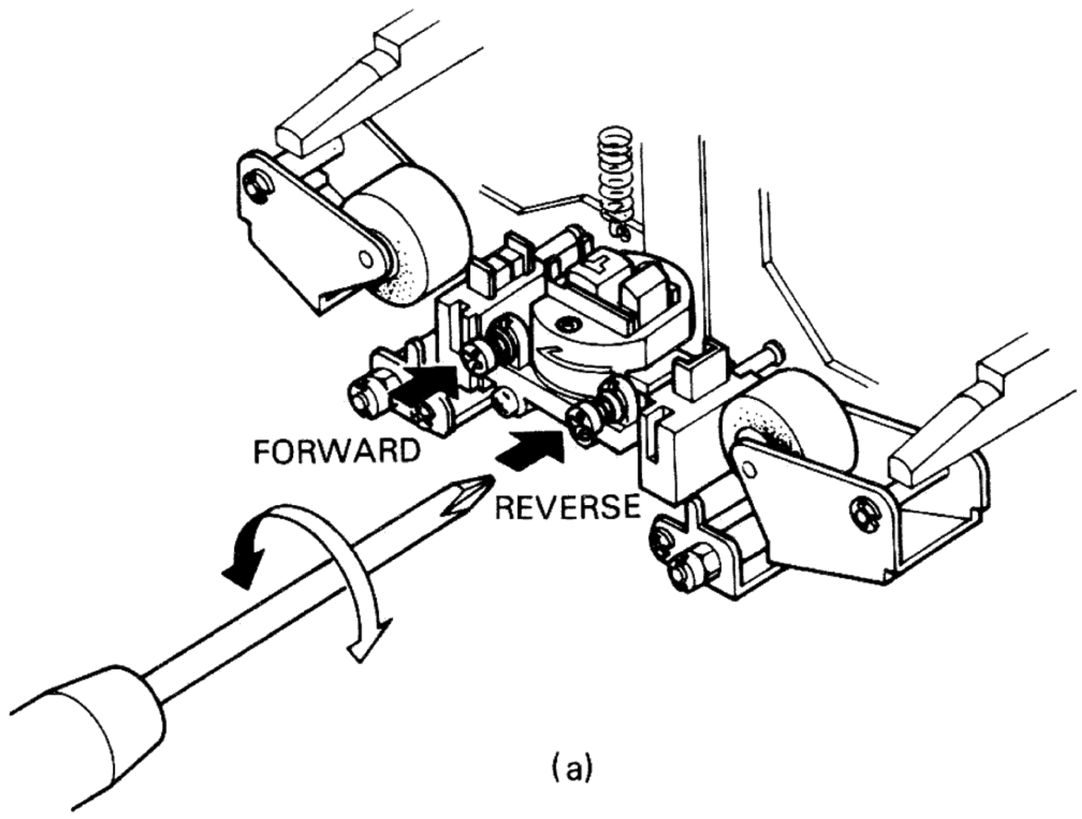

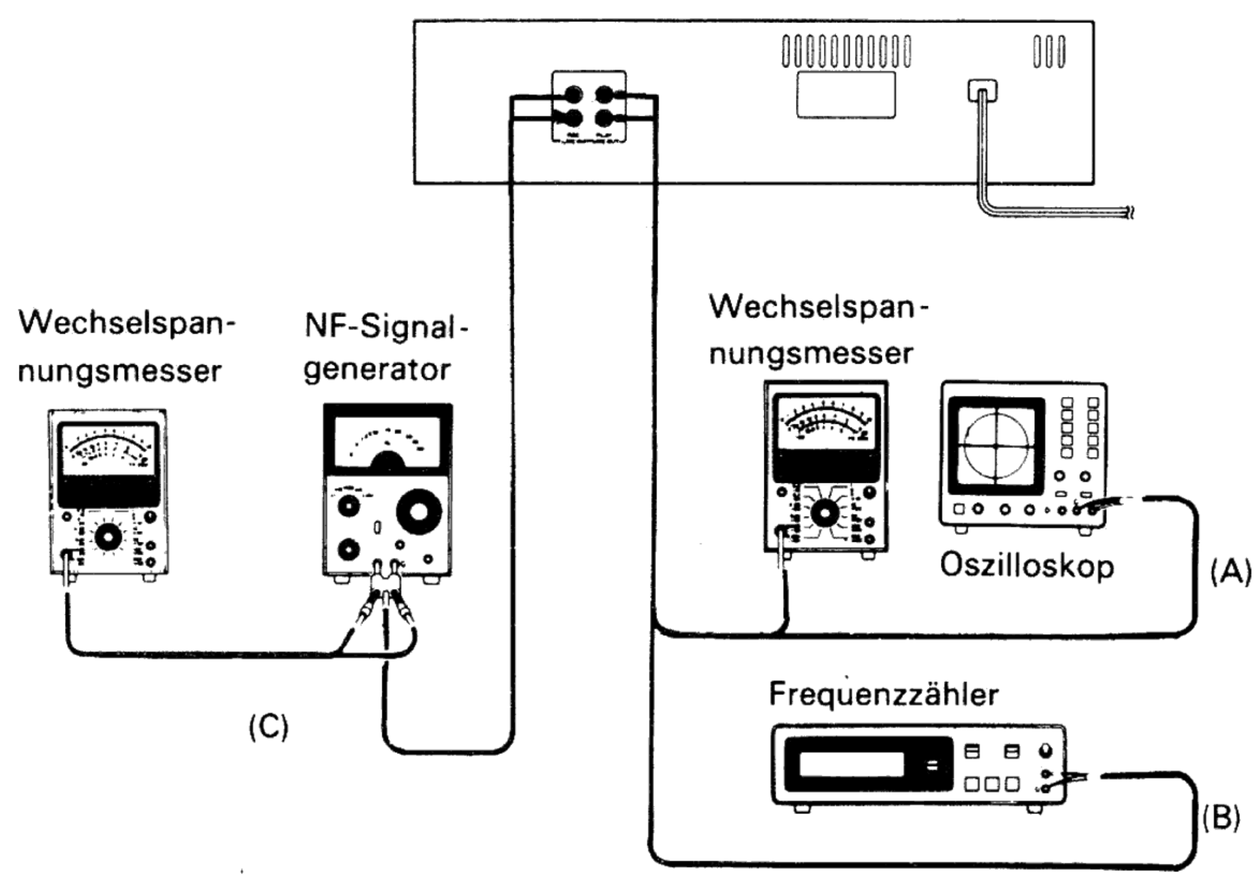

www.hifiengine.com

PC BOARD

RECORD/PLAYBACK (X28-1540-00) Component side view

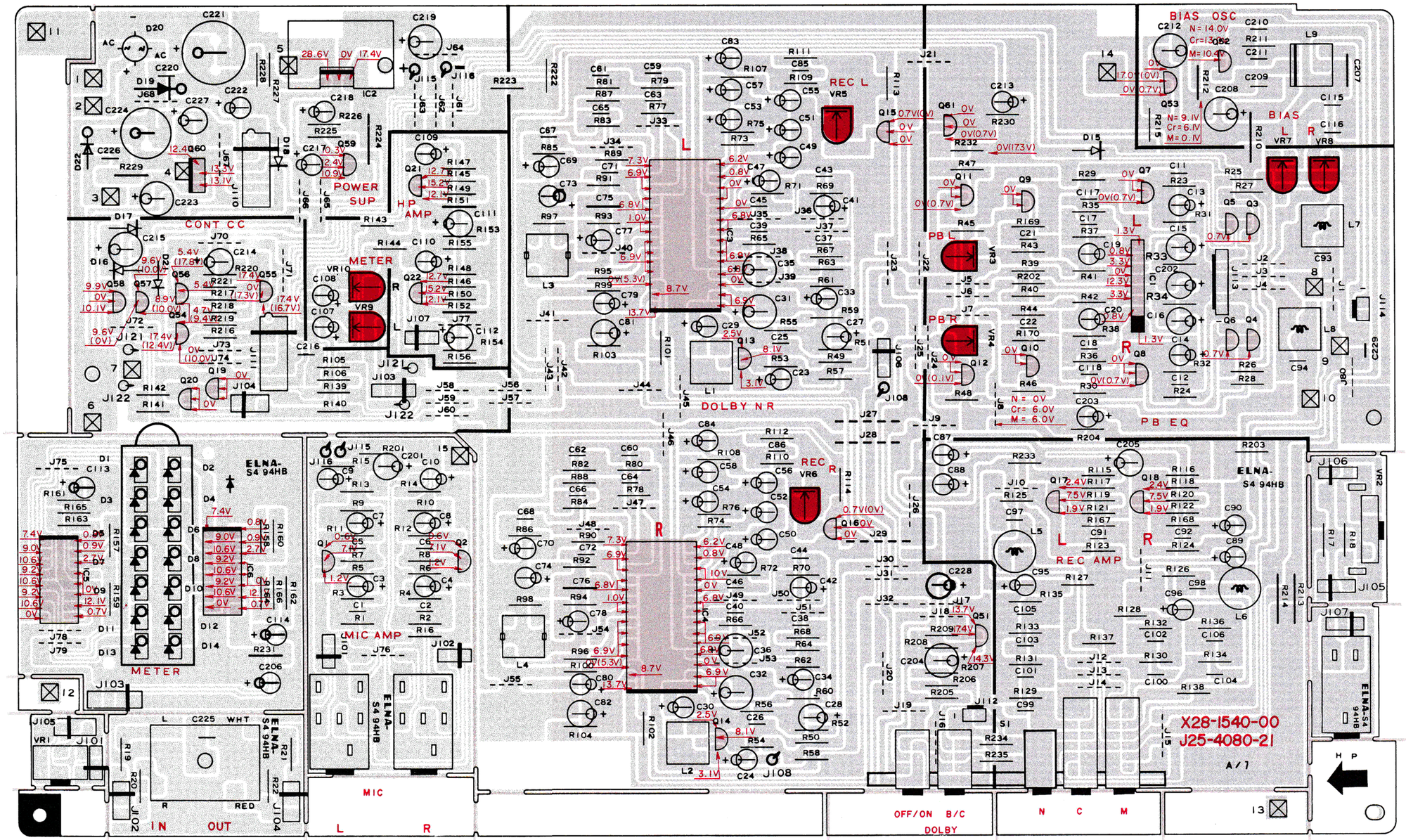

In this model, there are separated pc boards which were originally one. These separated pc boards can't be supplied independently.

Ex.	Part No. of pc board	Separated portion No.
	X09-1230-00	(A/3)
	X09-1230-00	(B/3)
	X09-1230-00	(C/3)

In the example shown above, separated portion can't be ordered independently. In case only A/3 was ordered, pc board ass'y of X09-1230-00, which all A/3, B/3, C/3 included, will be shipped.

Refer to the schematic diagram for the values of capacitors and resistors.
The PC board drawing is viewed from the side easy to check.

KENWOOD

STEREO CASSETTE DECK

KX-71R/71RB

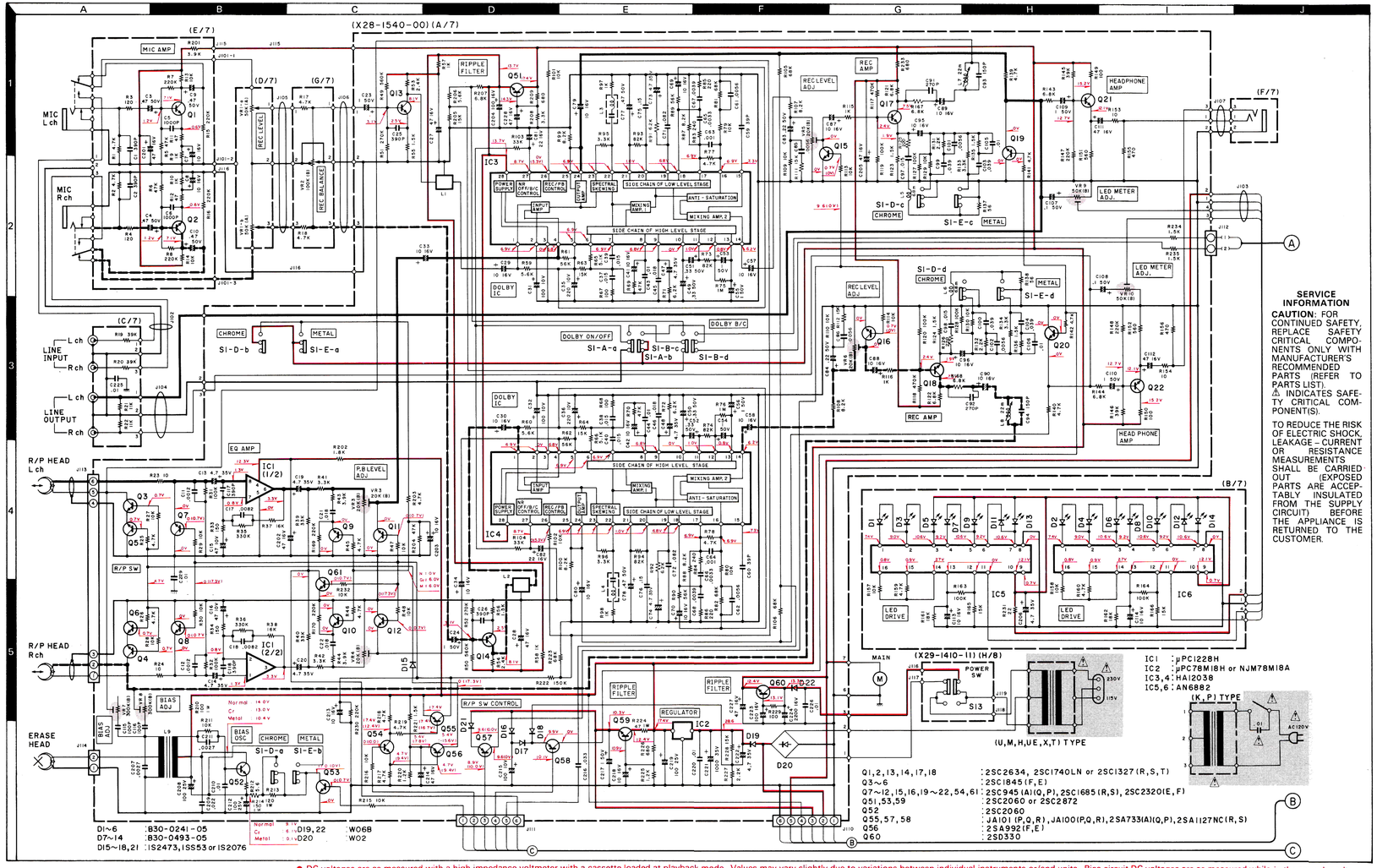

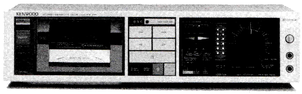

SERVICE INFORMATION

CAUTION: FOR CONTINUED SAFETY, REPLACE SAFETY CRITICAL COMPONENTS ONLY WITH MANUFACTURER'S RECOMMENDED PARTS (REFER TO PARTS LIST). ⚠ INDICATES SAFETY CRITICAL COMPONENT(S).

TO REDUCE THE RISK OF ELECTRIC SHOCK, LEAKAGE – CURRENT OR RESISTANCE MEASUREMENTS SHALL BE CARRIED OUT (EXPOSED PARTS ARE ACCEPTABLY INSULATED FROM THE SUPPLY CIRCUIT) BEFORE THE APPLIANCE IS RETURNED TO THE CUSTOMER.

SPECIFICATIONS

Type: Stereo Cassette Deck with Dolby B-C NR System and Direct Program Search System
Track System: 4-track, 2-channel Stereo/Mono, Recording/Playback
Recording System: AC Bias System (Bias Frequency: 85 kHz)
Erasing System: AC System
Tape Speed: 4.76 cm/sec (1-7/8 ips)
Heads: Record and Playback Head × 1 (Hard Permalloy Head with Sendust Guard)
Erase Head × 1 (Double Gap Ferrite)
Motor: 2 Motors
Capstan Drive: Electronically Controlled DC Single Motor
Reel Drive: DC Motor
Fast Winding Time: Approx. 90 seconds with C-60 tape
Frequency Response:
Normal Tape: 20 Hz to 16,000 Hz (30 Hz to 15,000 Hz, ±3 dB)
CrO_2 Tape: 20 Hz to 17,000 Hz (30 Hz to 15,000 Hz, ±3 dB)
Metal Tape: 20 Hz to 17,000 Hz (30 Hz to 15,000 Hz, ±3 dB)
Signal-to-Noise Ratio:
Dolby C Type NR ON: 75 dB
Dolby B Type NR ON: 67 dB
Dolby NR OFF: 57 dB
Harmonic Distortion: Less than 1.0% (at 1 kHz, 0 VU with Normal Tape)
Wow and Flutter: 0.04% (W.R.M.S.)
Input Sensitivity/Impedance:
LINE × 2: 77.5 mV/50 kohms
Microphones × 2: 0.7 mV/3.3 kohms
Output Level/Load Impedance:
LINE × 2: 270 mV/50 kohms
Headphones × 1: 50 mV/8 ohms

Built-in Features: Direct Program Search System by Micro-Computer
Dolby B and C Noise Reduction System
Three Position Tape Selectors (Normal/CrO_2/Metal)
LED Peak Level Meters
Full Auto Shut-off Mechanism in all Modes
Mechanical Tape Counter
Blank Search System
Index Scan System
Auto reverse Playback, Rec by Directional
Auto Recording Mute Function
Timer Stand-by Mechanism
Two Microphone Jacks, Headphone Jack
Quick Reverse with Photosensor, Revolving Head
Reverse Mode Switch
Reverse Mode Indicator
Power Requirements: AC 120V, 60 Hz: U.S.A. and Canada Models
AC 120V/220-240V (Switchable), 50/60 Hz: Other Countries
Power Consumption: 20 watts
Dimensions: W: 440 mm (17-5/16")
H: 117 mm (4-39/64")
D: 232 mm (9-1/8")
Weight: 4.9 kg (10.7 lb)
Supplied Accessories: Head Cleaning Set × 1, Audio Connection Cables × 2
Reference Tapes: Normal: KENWOOD NU-60
CrO_2: KENWOOD CD-60
Metal: KENWOOD MD-60

Kenwood follows a policy of continuous advancements in development. For this reason specifications may be changed without notice. DOLBY and the double-D symbol are trademarks of Dolby La boratories Licensing Corporation. Noise reduction circuit made under license from Dolby Laboratories Licensing Corporation.

Kenwood poursuit une politique de progrès constants en ce qui concerne le développement. Pour cette raison, les spécifications sont sujettes à modifications sans préavis. La marque DOLBY et le double "D" sont des marques dépo sées des Dolby Laboratories. Le système de réduction du bruit de fond est fabriqué sous license des Dolby Laboratories.

Kenwood strebt ständige Verbesserungen in der Entwicklung an. Daher bleiben Änderungen der technischen Daten jederzeit vorbehalten. DOLBY und Doppel-D-Symbol sind eingetragene Warenzei chen der Dolby Laboratories. Dolby-Rauschunterdrückung mit Lizenz der Dolby Laboratories gefertigt.

JA100
JA101
2SA1127NC
2SA684
2SA733
2SA934
2SA992
2SA999
2SB647
2SC1327
2SC1685
2SC1741
2SC1845
2SC2060
2SC2320
2SC2634
2SC2872
2SC945
2SD592NC

2SD882

2SD330

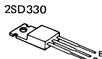

HA12038

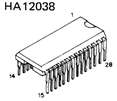

μPD4069UBC

AN6882

μPC1228H

μPD553C-224

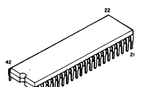

NJM78M18A
μPC78M18H

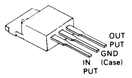

- DC voltages are as measured with a high impedance voltmeter with a cassette loaded at playback mode. Values may vary slightly due to variations between individual instruments or/and units. Bias circuit DC voltages are as measured while in the record mode.
- Les tensions c.c. doivent être mesurées avec un voltmètre à haute impédance, une cassette étant insérée en mode du lecture. Les valeurs peuvent différer légèrement du fait des variations inhérentes aux appareils et aux instruments de mesure individuels. Les tensions c.c. du circuit de polarité doivent être mesurées, l'appareil étant en mode d'enregistrement.
- Die angegeben Gleichspannungswerte wurden bie eingesetzter Cassette in der Wiedergabe mit einem hochohmigen Voltmeter gemessen. Dabei schwanken die Meßwerte aufgrund von Unterschieden zwischen einzelnein Instrumenten oder Geräten u.U. geringfügig. Die angegeben Gleichspannungswerte der Vormagnetisierungsschaltung wurden in der Aufnahme-Betriebsart gemessen.

Q1,2,7 : 2SA934, 2SA684 or 2SB647
Q3,4,9～11 : 2SC2060, 2SC1741, 2SC2872 or 2SD592NC
Q5 : 2SD882
Q6,8,16～19 : 2SC945(A)(Q,P) or 2SC2320(E,F)
Q13,15 : 2SA733(A)(Q,P), JA101(P,Q,R), JA100(P,Q,R), 2SA1127NC(R,S) or 2SA999(E,F)
Q14 : 2SC945(A)(Q)

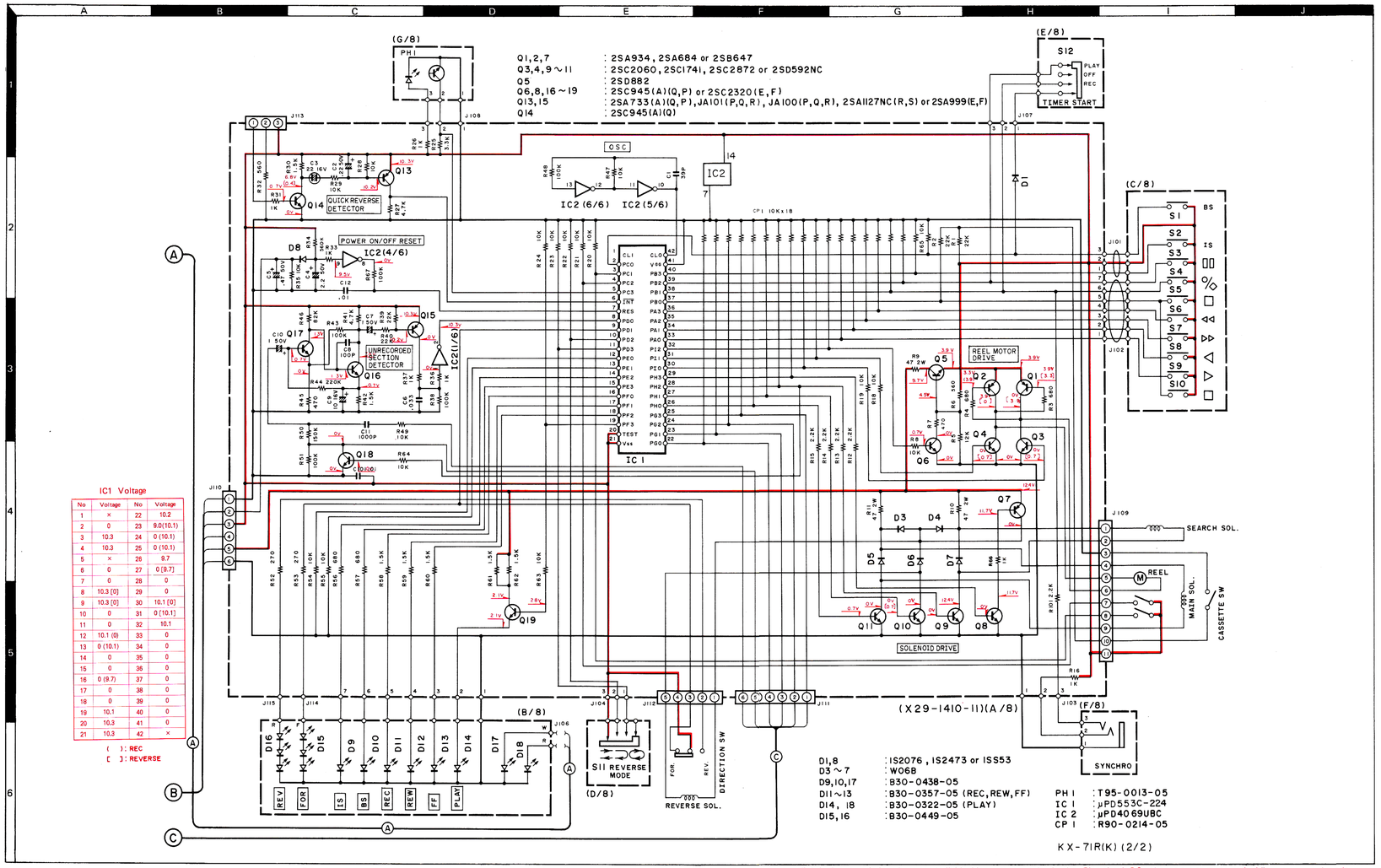

IC1 Voltage

No	Voltage	No	Voltage
1	×	22	10.2
2	0	23	9.0(10.1)
3	10.3	24	0 (10.1)
4	10.3	25	0 (10.1)
5	×	26	9.7
6	0	27	0 (9.7)
7	0	28	0
8	10.3 (0)	29	0
9	10.3 (0)	30	10.1 (0)
10	0	31	0 (10.1)
11	0	32	10.1
12	10.1 (0)	33	0
13	0 (10.1)	34	0
14	0	35	0
15	0	36	0
16	0 (9.7)	37	0
17	0	38	0
18	0	39	0
19	10.1	40	0
20	10.3	41	0
21	10.3	42	×

( ): REC
[ ]: REVERSE

D1,8 : 1S2076, 1S2473 or 1SS53
D3～7 : W06B
D9,10,17 : B30-0438-05
D11～13 : B30-0357-05 (REC,REW,FF)
D14, 18 : B30-0322-05 (PLAY)
D15,16 : B30-0449-05

PH1 : T95-0013-05
IC1 : μPD553C-224
IC2 : μPD4069UBC
CP1 : R90-0214-05

KX-71R(K)(2/2)

SCHEMATIC DIAGRAM (AN6882)

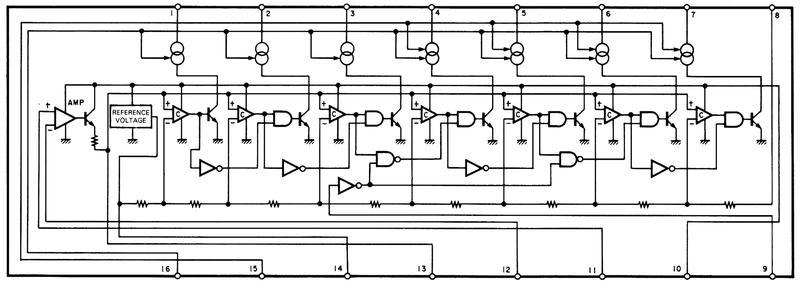

BLOCK DIAGRAM

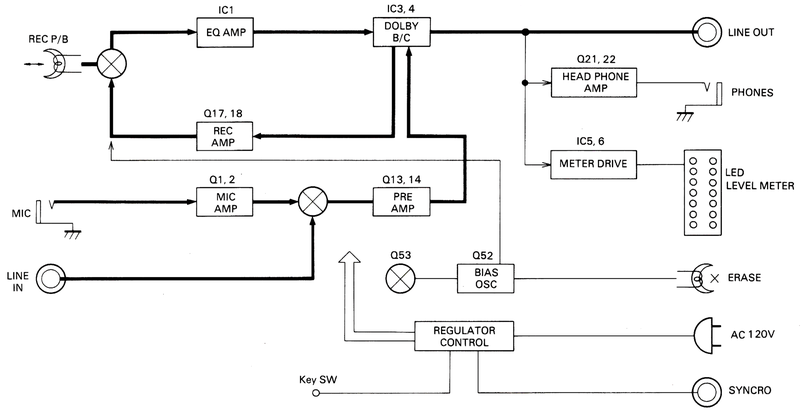

- DC voltages are as measured with a high impedance voltmeter with a cassette loaded at playback mode. Values may vary slightly due to variations between individual instruments or/and units. Bias circuit DC voltages are as measured while in the record mode.
- Les tensions c.c. doivent être mesurées avec un voltmètre à haute impédance, une cassette étant insérée en mode du lecture. Les valeurs peuvent différer légèrement du fait des variations inhérentes aux appareils et aux instruments de mesure individuels. Les tensions c.c. du circuit de polarité doivent être mesurées, l'appareil étant en mode d'enregistrement.
- Die angegeben Gleichspannungswerte wurden bie eingesetzter Cassette in der Wiedergabe mit einem hochohmigen Voltmeter gemessen. Dabei schwanken die Meßwerte aufgrund von Unterschieden zwischen einzelnein Instrumenten oder Geräten u.U. geringfügig. Die angegeben Gleichspannungswerte der Vormagnetisierungsschaltung wurden in der Aufnahme-Betriebsart gemessen.

PC BOARD

CONTROL CIRCUIT (X29-1410-11) Foil side view

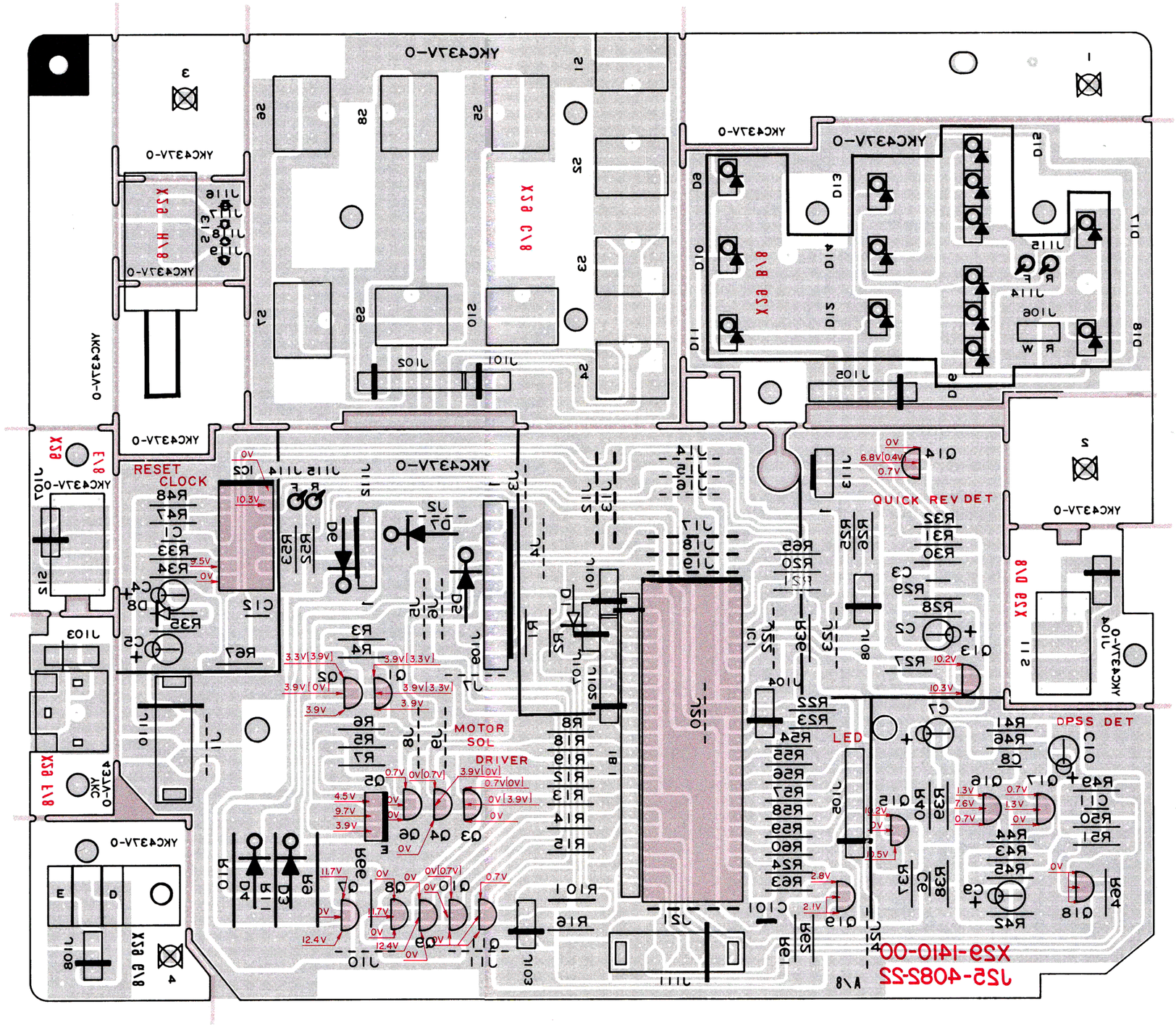

In this model, there are separated pc boards which were originally one. These separated pc boards can't be supplied independently.

Ex.	Part No. of pc board	Separated portion No.
	X09-1230-00	(A/3)
	X09-1230-00	(B/3)
	X09-1230-00	(C/3)

In the example shown above, separated portion can't be ordered independently. In case only A/3 was ordered, pc board ass'y of X09-1230-00, which all A/3, B/3, C/3 included, will be shipped.

IC1 Voltage

No	Voltage	No	Voltage
1	×	22	10.2
2	0	23	9.0(10.1)
3	10.3	24	0 (10.1)
4	10.3	25	0 (10.1)
5	×	26	9.7
6	0	27	0 [9.7]
7	0	28	0
8	10.3 [0]	29	0
9	10.3 [0]	30	10.1 [0]
10	0	31	0 [10.1]
11	0	32	10.1
12	10.1 (0)	33	0
13	0 (10.1)	34	0
14	0	35	0
15	0	36	0
16	0 (9.7)	37	0
17	0	38	0
18	0	39	0
19	10.1	40	0
20	10.3	41	0
21	10.3	42	×

( ): REC
[ ]: REVERSE

Refer to the schematic diagram for the values of capacitors and resistors.
The PC board drawing is viewed from the side easy to check.

www.hifiengine.com

EXPLODED VIEW (MECHANISM)

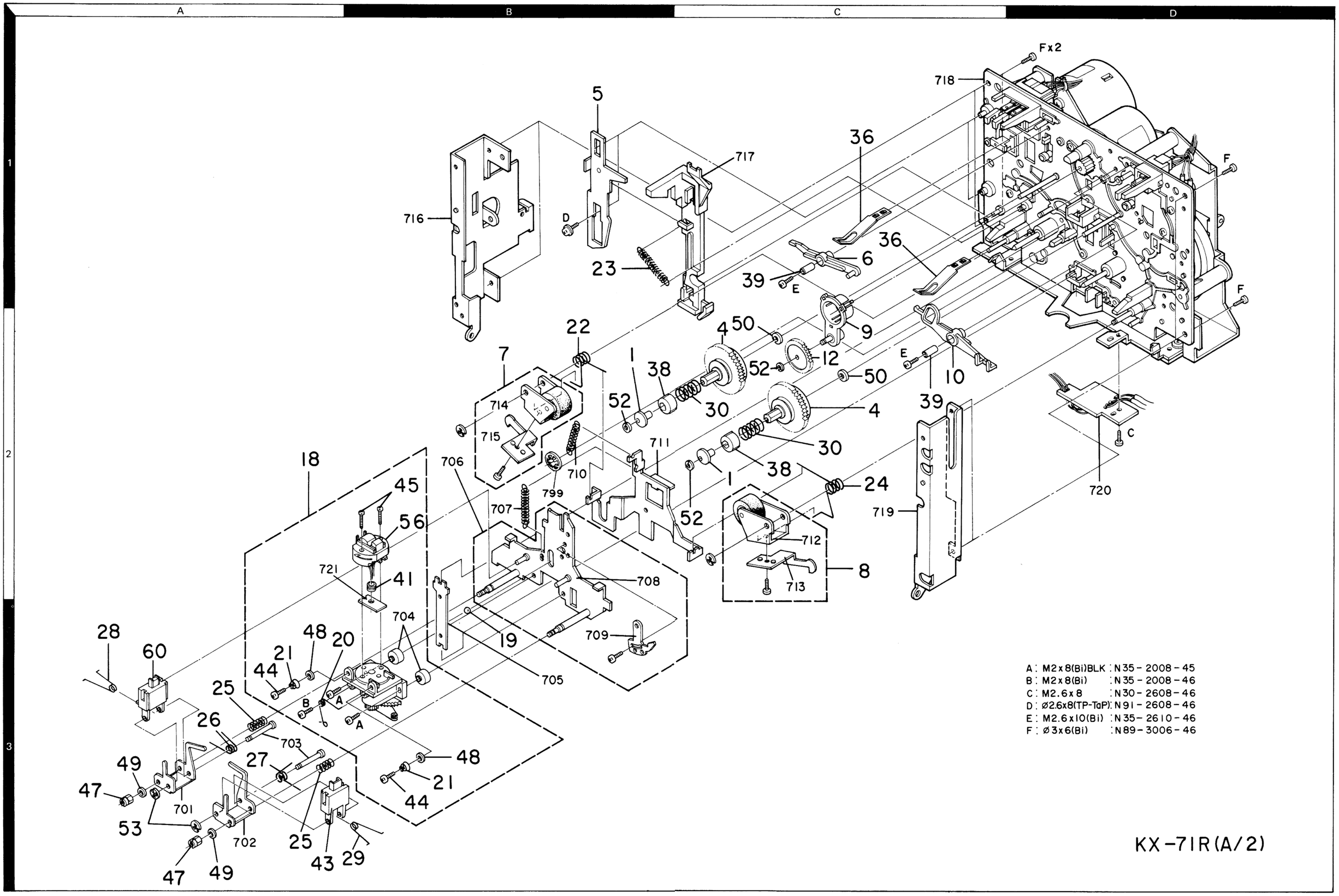

A : M2x8(Bi)BLK : N35-2008-45
B : M2x8(Bi) : N35-2008-46
C : M2.6x8 : N30-2608-46
D : ø2.6x8(TP-TaP) : N91-2608-46
E : M2.6x10(Bi) : N35-2610-46
F : ø3x6(Bi) : N89-3006-46

KX-71R(A/2)

EXPLODED VIEW (MECHANISM)

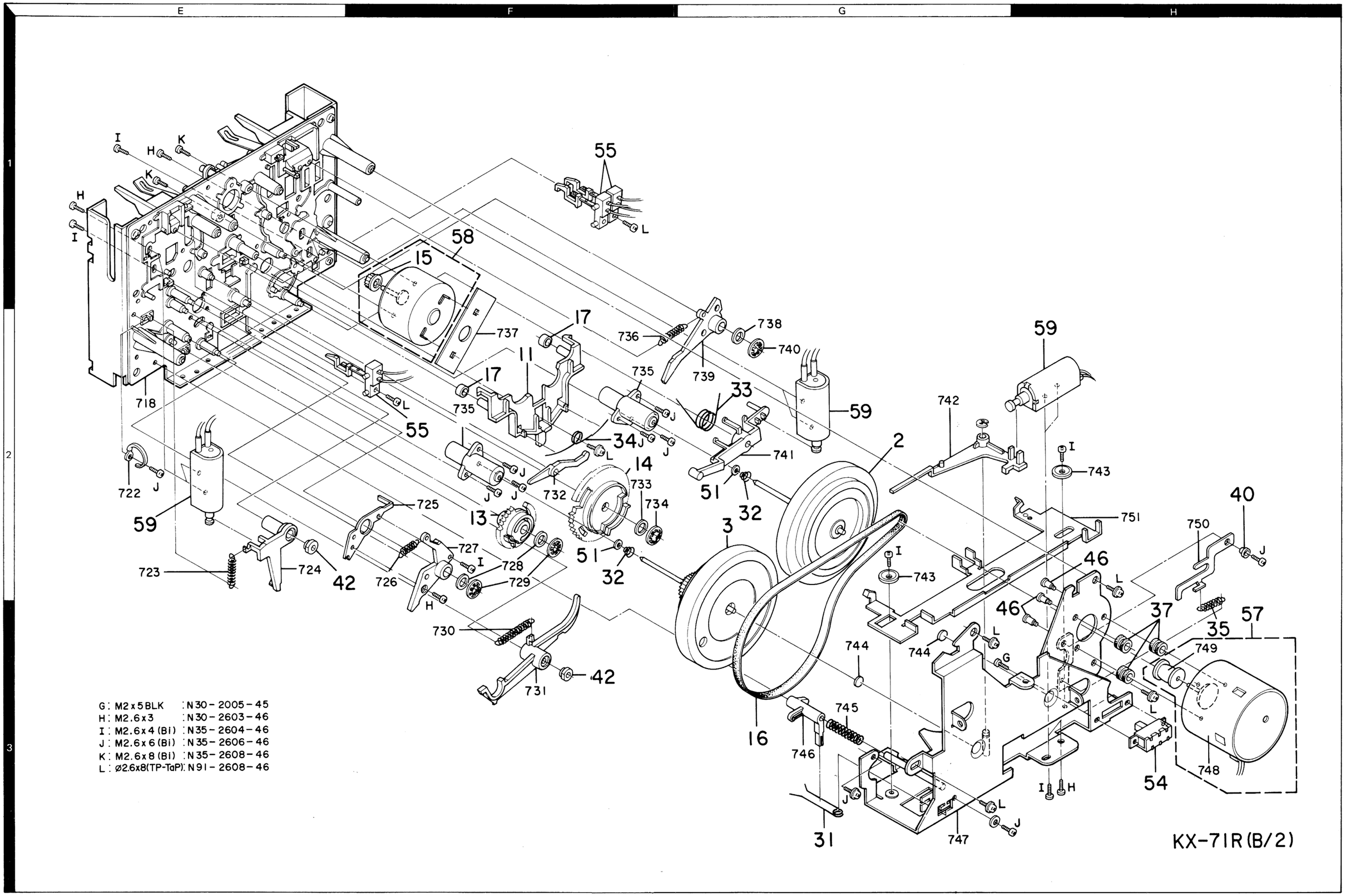

EXPLODED VIEW (UNIT)

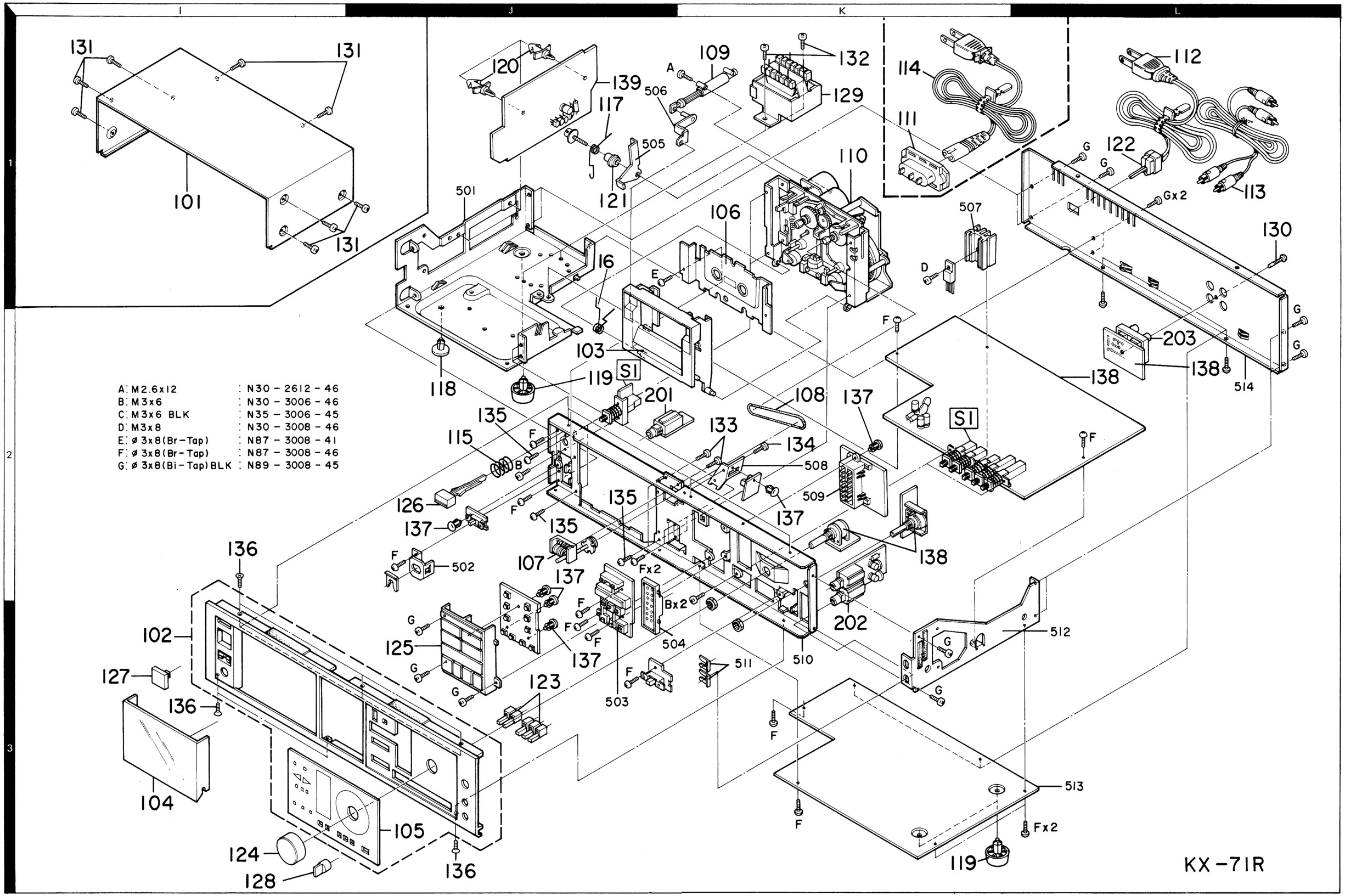

PARTS LIST

* New Parts
Parts without **Parts No.** are not supplied.
Les articles non mentionnes dans le **Parts No.** ne sont pas fournis.
Teile ohne **Parts No.** werden nicht geliefert.

⚠ indicates safety critical component.

Ref. No. 参照番号	Address 位置	New Parts 新	Parts No. 部品番号	Description 部品名／規格	Destination 仕向	Remarks 備考
			KX-71R/71RB			
101	1I		A01-0473-03	METALLIC CABINET	KPUMH	
101	1I		A01-0473-03	METALLIC CABINET	UE XT	
101	1I		A01-0473-03	METALLIC CABINET	E	
101	1I		A01-0633-03	METALLIC CABINET	K	
102	3I	*	A20-3361-13	PANEL ASSY	T	
102	3I	*	A20-3362-13	PANEL ASSY	KPUMH	
102	3I	*	A20-3362-13	PANEL ASSY	UE XE	
102	3I	*	A20-3574-03	PANEL ASSY	K	
103	2J	*	A53-0049-14	CASSETTE HOLDER ASSY	KPUMH	
103	2J	*	A53-0049-14	CASSETTE HOLDER ASSY	UE XT	
103	2J	*	A53-0049-14	CASSETTE HOLDER ASSY	E	
103	2J	*	A53-0089-04	CASSETTE HOLDER ASSY	K	
104	3I		A53-0052-04	CASSETTE LID		
105	3J		B03-0174-03	DRESSING PLATE		
106	1K	*	B03-0190-13	DRESSING PLATE	KPUMH	
106	1K	*	B03-0190-13	DRESSING PLATE	UE XT	
106	1K	*	B03-0190-13	DRESSING PLATE	E	
106	1K	*	B03-0499-03	DRESSING PLATE	K	
107	2J	*	B35-0018-05	TAPE COUNTER		
–			B46-0092-03	WARRANTY CARD	K K	
–			B46-0093-03	WARRANTY CARD	P	
–			B46-0094-03	WARRANTY CARD	UH UE	
–			B46-0095-03	WARRANTY CARD	UH UE	
–			B46-0096-03	WARRANTY CARD	X	
–			B46-0097-03	WARRANTY CARD	T	
–			B46-0098-03	WARRANTY CARD	E	
–		*	B50-4554-00	INSTRUCTION MANUAL	KPUMH	
–		*	B50-4554-00	INSTRUCTION MANUAL	UE X	
–		*	B50-4554-00	INSTRUCTION MANUAL	K	
–		*	B50-4555-00	INSTRUCTION MANUAL	PMXE	
–		*	B50-4556-00	INSTRUCTION MANUAL	M	
–		*	B50-4557-00	INSTRUCTION MANUAL	T	
–		*	B50-4558-00	INSTRUCTION MANUAL	E	
–			B59-0018-00	SERVICE DIRECTORY	UH UE	
–			B59-0094-00	SUB-INSTRUCTION MANUAL	KPUMH	
–			B59-0094-00	SUB-INSTRUCTION MANUAL	UE XT	
–			B59-0094-00	SUB-INSTRUCTION MANUAL	K	
–			B59-0095-00	SUB-INSTRUCTION MANUAL	PMXE	
–			B59-0096-00	SUB-INSTRUCTION MANUAL	M	
–			B59-0097-00	SUB-INSTRUCTION MANUAL	E	
⚠ C1			C91-0079-05	CERAMIC 0.01UF AC125V	KP K	
108	2K	*	D16-0077-04	BELT		
109	1K		D39-0164-05	DAMPER		
110	1K	*	D40-0255-05	CASSETTE MECHANISM ASSY		
⚠ 111	1K		E03-0102-15	AC INLET	UMHXT	
⚠ 111	1K		E03-0102-15	AC INLET	E UE	
⚠ 112	1L		E30-0181-05	AC POWER CORD	KP K	
113	1L		E30-0505-05	AUDIO CORD		
113	1L		E30-1353-05	AUDIO CORD		
⚠ 114	1K		E30-1305-15	AC POWER CORD (INLET)	UMH	
⚠ 114	1K		E30-1305-15	AC POWER CORD (INLET)	UE	

E: Scandinavia & Europe **H**:Audio Club **K**: USA **P**: Canada **K** : USA (KX-71RB)
S: South Africa **T**: England **U**: PX(Far East, Hawaii)
UE : AAFES(Europe) **X**: Australia **M**: Other Areas

www.hifiengine.com

PARTS LIST

* New Parts
Parts without **Parts No.** are not supplied.
Les articles non mentionnes dans le **Parts No.** ne sont pas fournis.
Teile ohne **Parts No.** werden nicht geliefert.

⚠ indicates safety critical component.

Ref. No. 参照番号	Address 位置	New Parts 新	Parts No. 部品番号	Description 部品名／規格	Destination 仕向	Remarks 備考
⚠ 114	1K		E30-1328-15	AC POWER CORD (INLET)	T	
⚠ 114	1K		E30-1329-05	AC POWER CORD (INLET)	E	
⚠ 114	1K		E30-1342-05	AC POWER CORD (INLET)	X	
–		*	F09-0052-04	HEAD PROTECTOR		
115	2J		G01-1222-04	COMPRESSION SPRING(EJECT)		
116	2J	*	G01-1255-04	SPRING (CASSETTE HOLDER)		
117	1J	*	G01-1316-14	SPRING (EJECT LEVER)		
–		*	H01-4369-04	ITEM CARTON CASE	KPUMH	
–		*	H01-4369-04	ITEM CARTON CASE	UE XE	
–		*	H01-4750-04	ITEM CARTON CASE	T	
–		*	H01-4806-04	ITEM CARTON CASE	K	
–			H10-1634-12	POLYSTYRENE FOAMED FIXTURE		
–			H20-1107-04	PROTECTION COVER	KPUHX	
–			H20-1107-04	PROTECTION COVER	TE UE	
–			H20-1107-04	PROTECTION COVER	K	
–			H20-1109-04	PROTECTION COVER	M	
–			H25-0078-04	PROTECTION BAG		
118	2J		J02-0109-05	FOOT (4.2MM)		
119	2J,3K		J02-0343-05	FOOT (10MM)		
120	1J		J19-0586-05	UNIT HOLDER		
121	1J	*	J31-0178-14	COLLAR (EJECT LEVER)		
⚠ 122	1L		J42-0083-05	POWER CORD BUSHING	KP K	
123	3J		K27-0896-04	KNOB (DOLBY,TAPE SELECTOR)		
124	3I		K29-0485-14	KNOB (REC LEVEL)		
125	3J	*	K29-1155-13	KNOB ASSY (OPERATION)	KPUMH	
125	3J	*	K29-1155-13	KNOB ASSY (OPERATION)	UE XT	
125	3J	*	K29-1155-13	KNOB ASSY (OPERATION)	E	
125	3J	*	K29-1318-03	KNOB ASSY (OPERATION)	K	
126	2J		K29-1160-04	KNOB (EJECT)		
127	3I		K29-1176-04	KNOB ASSY (POWER)		
128	3I		K29-1186-04	KNOB (REC BALANCE)	KPUMH	
128	3I		K29-1186-04	KNOB (REC BALANCE)	UE XT	
128	3I		K29-1186-04	KNOB (REC BALANCE)	E	
128	3I		K29-1272-04	KNOB (REC BALANCE)	K	
⚠ 129	1K		L01-6521-25	POWER TRANSFORMER	KP K	
⚠ 129	1K		L01-6524-15	POWER TRANSFORMER	UMHXT	
⚠ 129	1K		L01-6524-15	POWER TRANSFORMER	E UE	
130	1L		N09-0292-05	SCREW		
131	1I		N09-0377-05	TAPTITE SCREW	KPUMH	
131	1I		N09-0377-05	TAPTITE SCREW	UE XT	
131	1I		N09-0377-05	TAPTITE SCREW	E	
131	1I		N89-3008-45	TAPTITE SCREW	K	
132	1K		N09-0831-04	TAPTITE SCREW		
133	2K		N09-0979-05	TAPPING SCREW		
134	2K		N09-1203-05	TAPTITE SCREW		
135	2J		N09-1250-05	TAPTITE SCREW		
136	2I,3I		N09-1251-05	TAPTITE SCREW		
137	2J,2K		N29-0216-05	RIVET		
⚠ S1	2J		S40-1067-05	PUSH SWITCH (POWER)	KP K	
138	2K,2L	*	X28-1540-00	RECORD/PLAYBACK UNIT	UMHXT	
138	2K,2L	*	X28-1540-00	RECORD/PLAYBACK UNIT	UE	

E: Scandinavia & Europe **H**:Audio Club **K**: USA **P**: Canada **K** : USA (KX-71RB)
S: South Africa **T**: England **U**: PX(Far East, Hawaii)
UE : AAFES(Europe) **X**: Australia **M**: Other Areas

www.hifiengine.com

PARTS LIST

* New Parts
Parts without **Parts No.** are not supplied.
Les articles non mentionnes dans le **Parts No.** ne sont pas fournis.
Teile ohne **Parts No.** werden nicht geliefert.

⚠ indicates safety critical component.

Ref. No. 参照番号	Address 位置	New Parts 新	Parts No. 部品番号	Description 部品名／規格	Destination 仕向	Remarks 備考
138	2K,2L	*	X28-1540-11	RECORD/PLAYBACK UNIT	KPE [K]	
139	1J	*	X29-1410-11	CONTROL CIRCUIT UNIT	UMHXT	
139	1J	*	X29-1410-11	CONTROL CIRCUIT UNIT	E [UE]	
139	1J	*	X29-1410-12	CONTROL CIRCUIT UNIT	KP [K]	
RECORD/PLAYBACK (X28-1540-00)						
D1 -6			B30-0241-05	LED (PEAK LEVEL)		
D7 -14			B30-0493-05	LED (PEAK LEVEL)		
C207		*	C91-0348-05	POLYPRO 0.0027UF J		
201	2J		E11-0111-05	PHONE JACK (PHONES)		
202	3K		E11-0320-05	PHONE JACK (MIC)		
203	2L		E13-0434-05	PHONO JACK		
L1 ,2		*	L79-0163-05	LC FILTER		
L3 ,4			L39-0322-05	TRAP COIL		
L5 ,6			L40-6825-21	SMALL FIXED INDUCTOR		
L5 ,6			L40-6825-66	SMALL FIXED INDUCTOR		
L7 ,8			L39-0312-05	VARIABLE INDUCTOR		
L9		*	L32-0285-05	BIAS OSCILATING COIL		
R151,152			RD14GB2E561J	FL-PROOF RD 560 J 2E		
R210			RS14GB3A101J	FL-PROOF RS 100 J 3A		
R212			RD14GB2E5R6J	FL-PROOF RD 5.6 J 2E		
R213			RS14GB3A121J	FL-PROOF RS 120 J 3A		
R214			RS14GB3A151J	FL-PROOF RS 150 J 3A		
R224			RS14GB3A470J	FL-PROOF RS 47 J 3A		
R229			RD14GB2E101J	FL-PROOF RD 100 J 2E		
R231			R92-0508-05	FUSE-RESIST 22 J 2E		
VR1			R06-4062-05	VARIABLE RESISTOR (REC LEVEL)		
VR2			R01-5042-05	VARIABLE RESISTOR (BALANCE)		
VR3 -6			R12-3068-05	TRIMMING POT (20KB)		
VR7 ,8			R12-6008-05	TRIMMING POT (300KB)BIAS		
VR9 ,10			R12-4026-05	TRIMMING POT (50KB)LEVEL METER		
S1		*	S42-5034-05	MULTIPLE PUSH SW(DOLBY,SEL)		
D15 -18			1SS53	DIODE		
D15 -18			1S2076	DIODE		
D15 -18			1S2473	DIODE		
D19			W06B	DIODE		
D20			W02	DIODE		
D21			1SS53	DIODE		
D21			1S2076	DIODE		
D21			1S2473	DIODE		
D22			W06B	DIODE		
IC1			UPC1228H	IC		
IC2			NJM78M18A	IC		
IC2			UPC78M18H	IC		
IC3 ,4			HA12038	IC		
IC5 ,6			AN6882	IC		
Q1 ,2			2SC1327(R,S,T)	TRANSISTOR		
Q1 ,2			2SC1740LN	TRANSISTOR		
Q1 ,2			2SC2634	TRANSISTOR		
Q3 -6			2SC1845(F,E)	TRANSISTOR		
Q7 -12			2SC1685(R,S)	TRANSISTOR		
Q7 -12			2SC2320(E,F)	TRANSISTOR		

E: Scandinavia & Europe **H**:Audio Club **K**: USA **P**: Canada [K] : USA (KX-71RB)
S: South Africa **T**: England **U**: PX(Far East, Hawaii)
[UE] : AAFES(Europe) **X**: Australia **M**: Other Areas

www.hifiengine.com

PARTS LIST

* New Parts
Parts without **Parts No.** are not supplied.
Les articles non mentionnes dans le **Parts No.** ne sont pas fournis.
Teile ohne **Parts No.** werden nicht geliefert.

⚠ indicates safety critical component.

Ref. No. 参照番号	Address 位置	New Parts 新	Parts No. 部品番号	Description 部品名／規格	Destination 仕向	Remarks 備考
Q7 -12			2SC945(A)(Q,P)	TRANSISTOR		
Q13 ,14			2SC1327(R,S,T)	TRANSISTOR		
Q13 ,14			2SC1740LN	TRANSISTOR		
Q13 ,14			2SC2634	TRANSISTOR		
Q15 ,16			2SC1685(R,S)	TRANSISTOR		
Q15 ,16			2SC2320(E,F)	TRANSISTOR		
Q15 ,16			2SC945(A)(Q,P)	TRANSISTOR		
Q17 ,18			2SC1327(R,S,T)	TRANSISTOR		
Q17 ,18			2SC1740LN	TRANSISTOR		
Q17 ,18			2SC2634	TRANSISTOR		
Q19 -22			2SC1685(R,S)	TRANSISTOR		
Q19 -22			2SC2320(E,F)	TRANSISTOR		
Q19 -22			2SC945(A)(Q,P)	TRANSISTOR		
Q51			2SC2872	TRANSISTOR		
Q51 -53			2SC2060	TRANSISTOR		
Q52			2SC2060	TRANSISTOR		
Q53			2SC2872	TRANSISTOR		
Q54			2SC1685(R,S)	TRANSISTOR		
Q54			2SC2320(E,F)	TRANSISTOR		
Q54			2SC945(A)(Q,P)	TRANSISTOR		
Q55			JA100(P,Q,R)	TRANSISTOR		
Q55			JA101(P,Q,R)	TRANSISTOR		
Q55			2SA1127NC(R,S)	TRANSISTOR		
Q55			2SA733(A)(Q,P)	TRANSISTOR		
Q55			2SA999(E,F)	TRANSISTOR		
Q56			2SA992(F,E)	TRANSISTOR		
Q57 ,58			JA100(P,Q,R)	TRANSISTOR		
Q57 ,58			JA101(P,Q,R)	TRANSISTOR		
Q57 ,58			2SA1127NC(R,S)	TRANSISTOR		
Q57 ,58			2SA733(A)(Q,P)	TRANSISTOR		
Q57 ,58			2SA999(E,F)	TRANSISTOR		
Q59			2SC2060	TRANSISTOR		
Q59			2SC2872	TRANSISTOR		
Q60			2SD330	TRANSISTOR		
Q61			2SC1685(R,S)	TRANSISTOR		
Q61			2SC2320(E,F)	TRANSISTOR		
Q61			2SC945(A)(Q,P)	TRANSISTOR		
CONTROL CIRCUIT (X29-1410-11)						
D9 ,10			B30-0438-05	LED(INDEX SCAN,BLANK SEARCH)		
D11 -13			B30-0357-05	LED(REC PAUSE,DPSS)		
D14			B30-0322-05	LED(DPSS)		
D15 ,16			B30-0449-05	LED(REVERSE,FORWARD)		
D17			B30-0438-05	LED(DOLBY C)		
D18			B30-0322-05	LED(DOLBY B)		
C2			CE04GW1HR22M	LL-ELEC 0.22UF 50WV		
C3		*	CE04BW1C220M	NP-ELEC 22UF 16WV		
C4			CE04GW1H2R2M	LL-ELEC 2.2UF 50WV		
C5			CE04GW1HR47M	LL-ELEC 0.47UF 50WV		
CP1		*	R90-0214-05	BAR-RESIST		
R9 -11			RS14GB3D470J	FL-PROOF RS 47 J 3D		
S1 -10			S40-1068-05	PUSH SWITCH		
S11 ,12			S31-2062-05	SLIDE SWITCH(TIMER,MODE)		
S13			S40-2173-05	PUSH SWITCH(POWER)	UMHXE	

E: Scandinavia & Europe H:Audio Club K: USA P: Canada [K] : USA (KX-71RB)
S: South Africa T: England U: PX(Far East, Hawaii)
[UE]: AAFES(Europe) X: Australia M: Other Areas

www.hifiengine.com

PARTS LIST

* New Parts
Parts without **Parts No.** are not supplied.
Les articles non mentionnes dans le **Parts No.** ne sont pas fournis.
Teile ohne **Parts No.** werden nicht geliefert.

⚠ indicates safety critical component.

Ref. No. 参照番号	Address 位置	New Parts 新	Parts No. 部品番号	Description 部品名／規格	Destination 仕向	Remarks 備考
S13			S40-2173-05	PUSH SWITCH(POWER)	T UE	
PH1			T95-0013-05	OPTO ISOLATOR		
D1			1SS53	DIODE		
D1			1S2076	DIODE		
D1			1S2473	DIODE		
D3 -7			W06B	DIODE		
D8			1SS53	DIODE		
D8			1S2076	DIODE		
D8			1S2473	DIODE		
IC1		*	UPD553C-224	IC		
IC2			UPD4069UBC	IC		
Q1 ,2			2SA684	TRANSISTOR		
Q1 ,2			2SA934	TRANSISTOR		
Q1 ,2			2SB647	TRANSISTOR		
Q3 ,4			2SC1741	TRANSISTOR		
Q3 ,4			2SC2060	TRANSISTOR		
Q3 ,4			2SC2872	TRANSISTOR		
Q3 ,4			2SD592NC	TRANSISTOR		
Q5			2SD882	TRANSISTOR		
Q6			2SC2320(E,F)	TRANSISTOR		
Q6			2SC945(A)(Q,P)	TRANSISTOR		
Q7			2SA684	TRANSISTOR		
Q7			2SA934	TRANSISTOR		
Q7			2SB647	TRANSISTOR		
Q8			2SC2320(E,F)	TRANSISTOR		
Q8			2SC945(A)(Q,P)	TRANSISTOR		
Q9 -11			2SC1741	TRANSISTOR		
Q9 -11			2SC2060	TRANSISTOR		
Q9 -11			2SC2872	TRANSISTOR		
Q9 -11			2SD592NC	TRANSISTOR		
Q13			JA100(P,Q,R)	TRANSISTOR		
Q13			JA101(P,Q,R)	TRANSISTOR		
Q13			2SA1127NC(R,S)	TRANSISTOR		
Q13			2SA733(A)(Q,P)	TRANSISTOR		
Q13			2SA999(E,F)	TRANSISTOR		
Q14			2SC945(A)(Q)	TRANSISTOR		
Q15			JA100(P,Q,R)	TRANSISTOR		
Q15			JA101(P,Q,R)	TRANSISTOR		
Q15			2SA1127NC(R,S)	TRANSISTOR		
Q15			2SA733(A)(Q,P)	TRANSISTOR		
Q15			2SA999(E,F)	TRANSISTOR		
Q16 -19			2SC2320(E,F)	TRANSISTOR		
Q16 -19			2SC945(A)(Q,P)	TRANSISTOR		
CASSETTE MECHANISM ASS'Y (D40-0255-05)						
1	2B,2C	*	B09-0025-08	CAP		
2	2G	*	D01-0044-08	FLYWHEEL(L)		
3	2G	*	D01-0045-08	FLYWHEEL(R)		
4	2C	*	D03-0210-08	REEL		
5	1B	*	D10-0315-08	SLIDER(EJECT)		
6	1C	*	D10-0328-08	TRANSFER LEVER		
7	2B	*	D10-0329-08	PINCH ROLLER ASSY (L)		
8	2C	*	D10-0330-08	PINCH ROLLER ASSY (R)		

E: Scandinavia & Europe **H**:Audio Club **K**: USA **P**: Canada **K** : USA (KX-71RB)
S: South Africa **T**: England **U**: PX(Far East, Hawaii)
UE : AAFES(Europe) **X**: Australia **M**: Other Areas

www.hifiengine.com

PARTS LIST

* New Parts
Parts without **Parts No.** are not supplied.
Les articles non mentionnes dans le **Parts No.** ne sont pas fournis.
Teile ohne **Parts No.** werden nicht geliefert.

⚠ indicates safety critical component.

Ref. No. 参照番号	Address 位置	New Parts 新	Parts No. 部品番号	Description 部品名／規格	Destination 仕向	Remarks 備考
9	2C	*	D10-0331-08	LEVER ASSY		
10	2C	*	D10-0332-08	RELEASE LEVER		
11	2F	*	D10-0333-08	BRAKE SLIDER		
12	2C	*	D13-0084-08	TRANSFER GEAR		
13	2F	*	D13-0085-08	PAUSE CAM GEAR		
14	2F	*	D13-0086-08	PLAY CAM GEAR		
15	1F	*	D13-0087-08	GEAR		
16	3G	*	D16-0079-08	BELT		
17	2F	*	D31-0009-08	BRAKE RUBBER		
18	2A	*	D40-0275-08	HEAD BLOCK		
19	3B	*	D90-0024-08	STEEL BALL		
20	3A	*	G01-1256-08	HOLDER SPRING		
21	3A,3B	*	G01-1257-08	SPRING		
22	2B	*	G01-1258-08	SPRING		
23	1B	*	G01-1259-08	LOCK SLIDER SPRING		
24	2C	*	G01-1260-08	PINCH ROLLER SPRING		
25	3A	*	G01-1261-08	TAPE GUIDE LEVER SPRING		
26	3A	*	G01-1262-08	TAPE GUIDE SPRING(A)(L)		
27	3A	*	G01-1263-08	TAPE GUIDE SPRING(A)(R)		
28	3A	*	G01-1264-08	TAPE GUIDE SPRING(B)(L)		
29	3B	*	G01-1265-08	TAPE GUIDE SPRING(B)(R)		
30	2C	*	G01-1266-08	SPRING(REEL)		
31	3G	*	G01-1267-08	SPRING		
32	2F,2G	*	G01-1268-08	SPRING(FLYWHEEL)		
33	2G	*	G01-1269-08	PLAY LOCK LEVER SPRING		
34	2F	*	G01-1270-08	BRAKE SPRING		
35	2H	*	G01-1271-08	ASSIST LEVER SPRING		
36	1C	*	G02-0105-08	FLAT SPRING		
37	3H	*	G13-0140-08	MOTOR CUSHION		
38	2B,2C	*	J31-0185-08	COLLAR(A)		
39	1C,2C	*	J31-0186-08	COLLAR(B)		
40	2H	*	J31-0187-08	COLLAR(C)		
41	2B	*	J42-0104-08	BUSH		
42	2E,3F	*	J42-0105-08	BUSH		
43	3A	*	J90-0118-08	TAPE GUIDE		
44	3A,3B	*	N09-1256-08	SCREW		
45	2B	*	N09-1257-08	SCREW		
46	2H	*	N09-1259-08	SCREW		
47	3A	*	N14-0135-08	NUT		
48	3A,3B	*	N19-0348-08	WASHER		
49	3A	*	N19-0349-08	WASHER		
50	2C	*	N19-0350-08	WASHER		
51	2F,2G	*	N19-0351-08	WASHER		
52	2B,2C	*	N29-0060-08	RING		
53	3A	*	N29-0061-08	E RING		
54	3H	*	S31-1007-08	SLIDE SWITCH		
55	1F,2F	*	S46-1025-08	LEAF SWITCH		
56	2B	*	T34-0303-08	R/P HEAD		
57	3H	*	T49-0015-08	MAIN MOTOR ASSY		
58	1F	*	T49-0016-08	REEL MOTOR ASSY		
59	2E,2G	*	T94-0023-08	SOLENOID		
60	3A	*	T95-0014-08	PHOTO COUPLER ASSY		

E: Scandinavia & Europe **H**:Audio Club **K**: USA **P**: Canada **K** : USA (KX-71RB)
S: South Africa **T**: England **U**: PX(Far East, Hawaii)
UE : AAFES(Europe) **X**: Australia **M**: Other Areas

www.hifiengine.com

WORLD MAP & AREA CODE

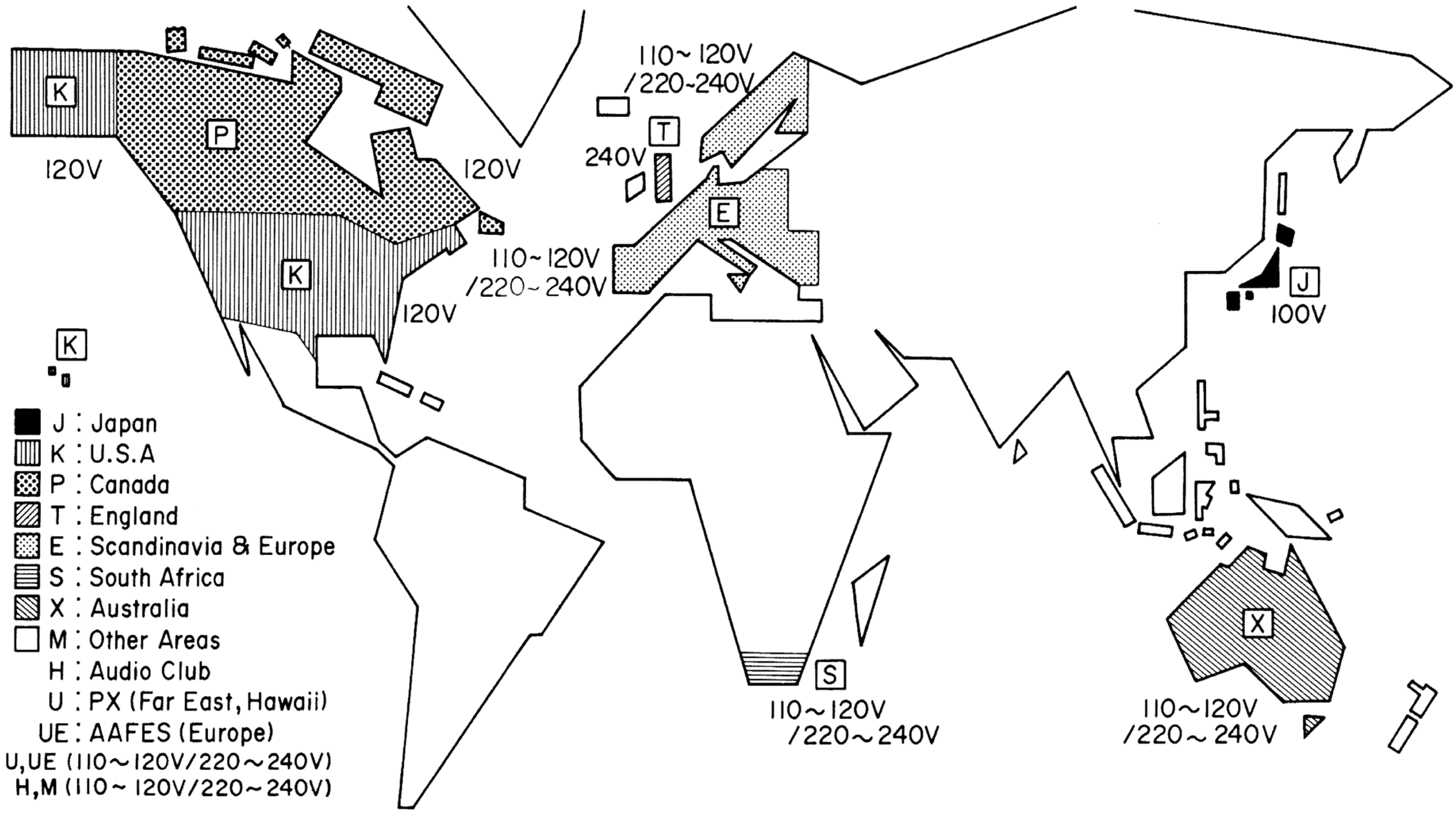

www.hifiengine.com

MEMO

TRIO-KENWOOD CORPORATION
Shionogi Shibuya Building, 17-5, 2-chome Shibuya, Shibuya-ku, Tokyo 150, Japan

KENWOOD ELECTRONICS
1315 E. Watsoncenter Rd, Carson, California 90745;
75 Seaview Drive, Secaucus, New Jersey 07094, U.S.A.

TRIO-KENWOOD CANADA INC.,
1070 Jayson Court, Mississauga, Ontario, Canada L4W 2V5

TRIO-KENWOOD ELECTRONICS, N.V.
Leuvensesteenweg 504 B-1930 Zaventem, Belgium

TRIO-KENWOOD ELECTRONICS GmbH
Rudolf-Brass-Str. 20, 6056 Heusenstamm, West Germany

TRIO-KENWOOD FRANCE S.A.
5, Boulevard Ney, 75018 Paris, France

TRIO-KENWOOD (AUSTRALIA) PTY. LTD. (INCORPORATED IN N.S.W.)
4E Woodcock Place, Lane Cove, N.S.W. 2066, Australia

KENWOOD & LEE ELECTRONICS, LTD.
Wang Kee Building, 5th Floor, 34-37, Connaught Road, Central, Hong Kong

1983-1 PRINTED IN JAPAN B51-1420-00 (G) 2888

www.hifiengine.com

KENWOOD

KX-71R

SERVICE MANUAL SUPPLEMENT

(Note) This service manual describes the operation of the mechanism of KX-71R. Please file it with the basic service manual.

Description of Mechanism Operation

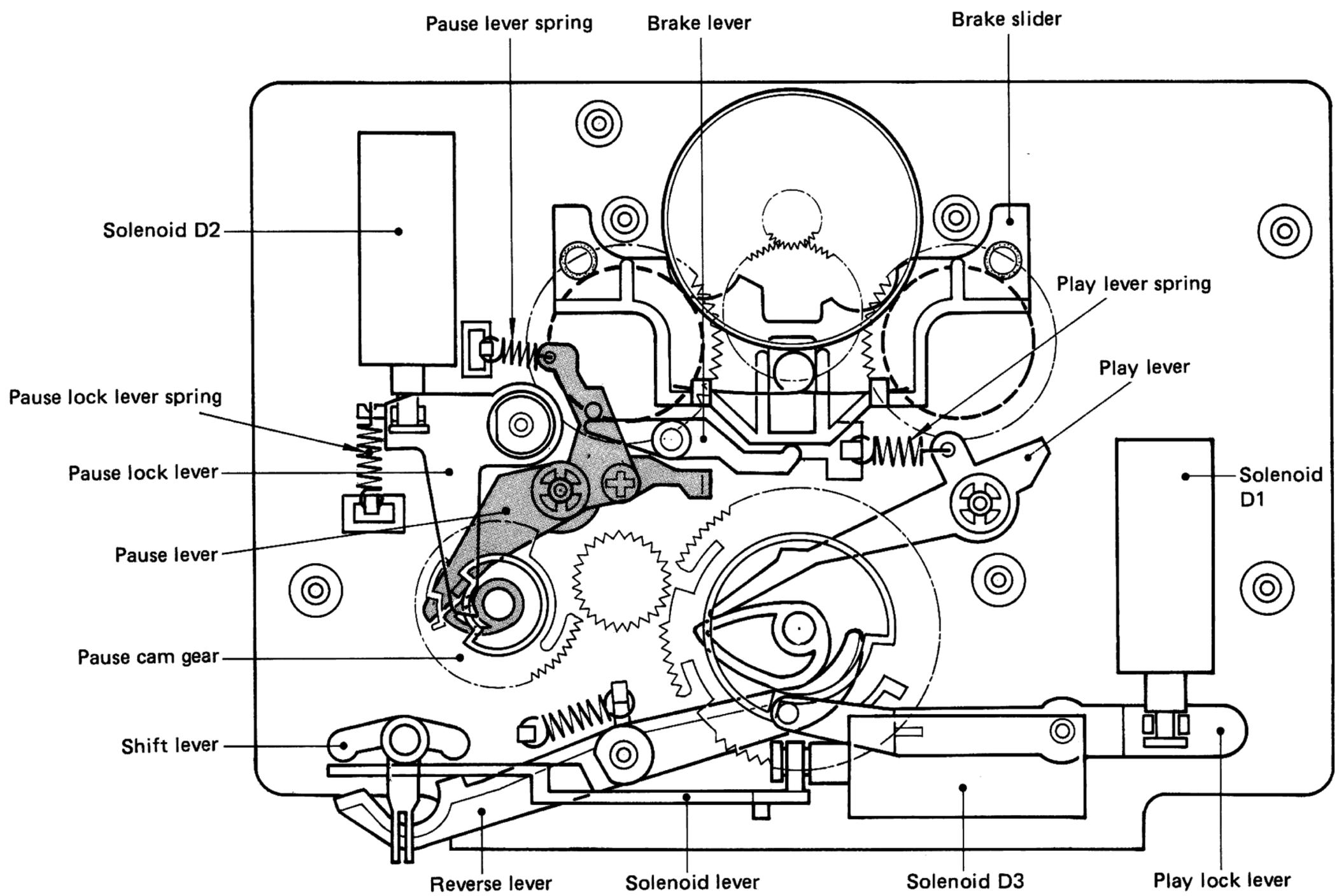

Fig. 1 Mechanism rear view

Pinch roller pressure	: 320g (Standard)
Take up torque	: 35~60g.cm
FF/REW torque	: 80~160g.cm

www.hifiengine.com

DESCRIPTION OF MECHANISM OPERATION

1. PLAY operation (1)

(1) The microcomputer (μPD553C-224) activates solenoid D1 (①) to pull the play lock lever when the FORWARD PLAY button or REVERSE PLAY button is pressed.

(2) The projection b, of the play lock lever disengages from the projection a, of the play cam gear. (②).

(3) The play lever, pulled by the play lever spring, makes the play cam gear rotate, slightly in the direction shown by the arrow (③).

(4) The capstan gear and play cam gear engage and the play cam gear starts rotating.

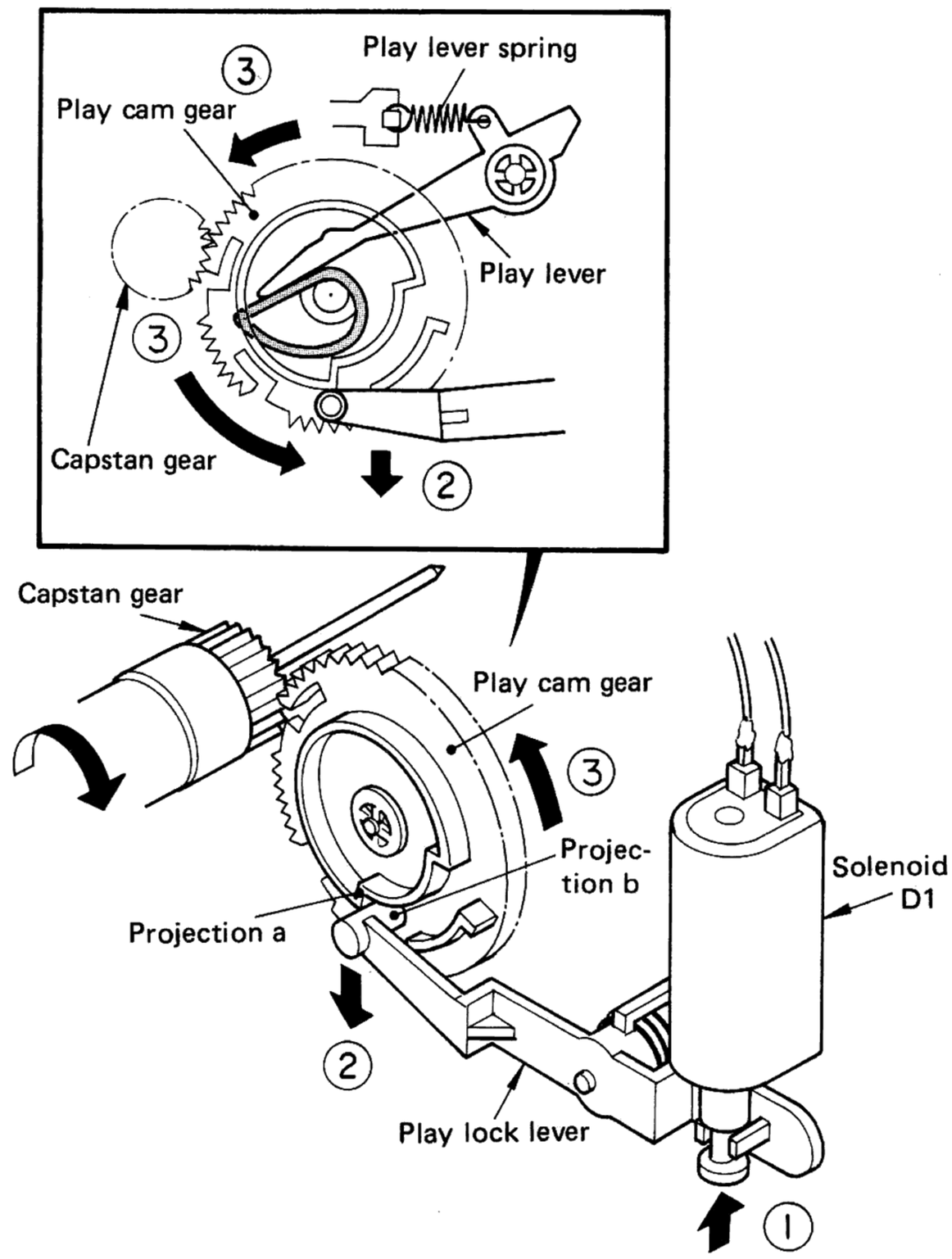

Fig. 2 PLAY operation (1)

2. PLAY operation (2)

(1) The capstan gear rotates the play cam gear in the direction shown by the arrow (④). The play cam gear stops this rotation when its toothless segment comes to the engaging position with the play cam gear.

(2) However, the play cam gear continues to rotate a little further since the play lever pushes the cam of the play cam gear. It stops when projection c comes in contact with projection b.

(3) The cam of the play cam gear pushes up the play lever and the portion A of the head base in the direction shown by the arrow (⑤) during the above operation, thus raising the head base and moving the REC/PLAY head and the erase head to the play position. At the same time, the brake slider is pushed up by the portion A in the direction shown by the arrow (⑥) and it is detached from the supply and take-up reels.

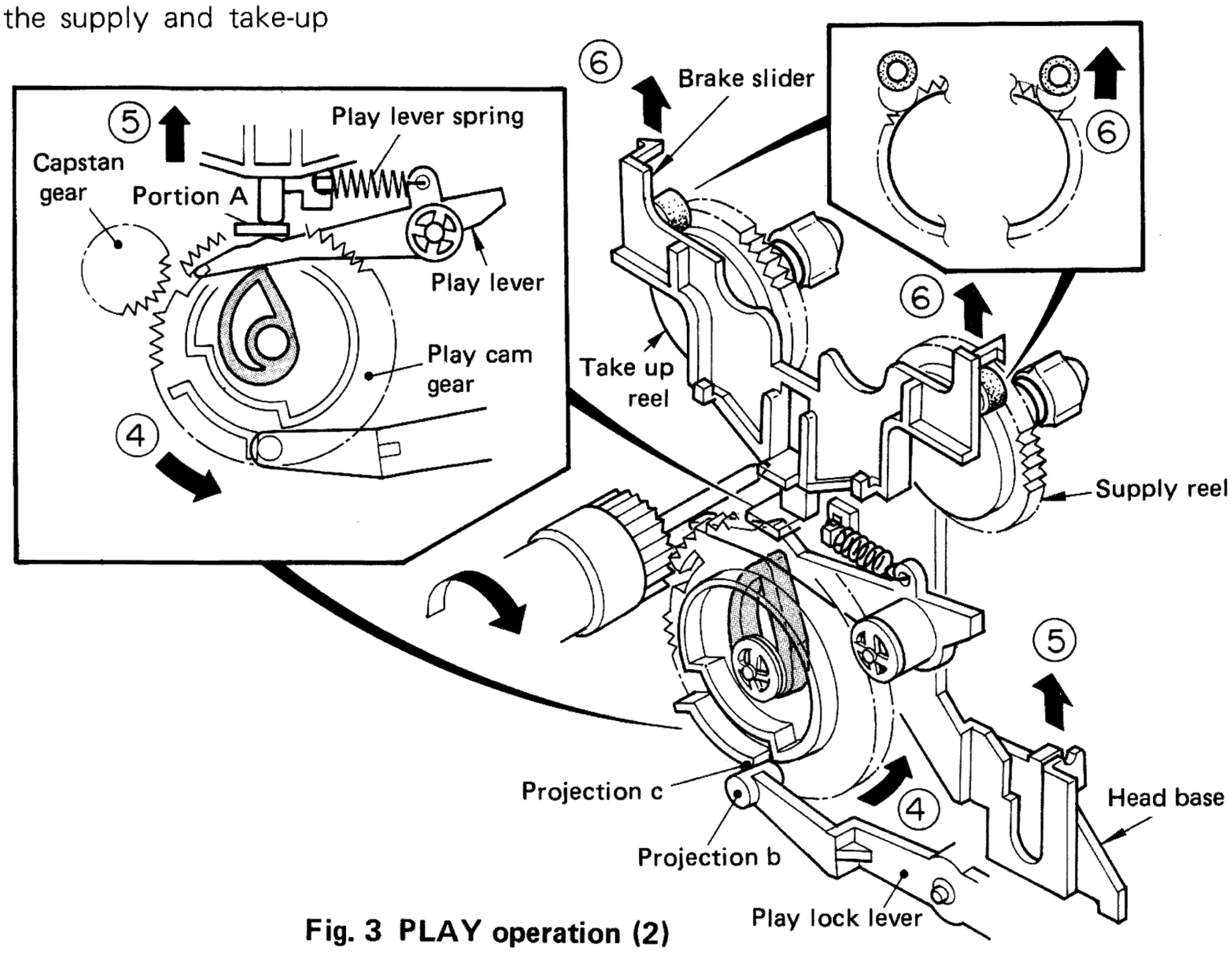

Fig. 3 PLAY operation (2)

DESCRIPTION OF MECHANISM OPERATION

3. PLAY operation (3)

(1) During FORWARD PLAY the motor gear rotates in the direction shown by the arrow (⑦) and causes the transfer gear to rotate in the direction shown by the arrow (⑧). The transfer gear is also moved laterally in the direction shown by the arrow (⑨).

(2) The transfer gear engages with the take-up reel and the take-up reel is driven to rotate in the direction shown by the arrow (⑩).

(3) During REVERSE PLAY the motor gear rotates in the direction opposite to that shown by the arrow (⑦). The transfer gear rotates in the direction opposite to that shown by the arrow (⑧) and is moved laterally in the direction opposite to that shown by the arrow (⑨). The transfer gear engages with the supply reel and drives it in the direction shown by the arrow (⑪).

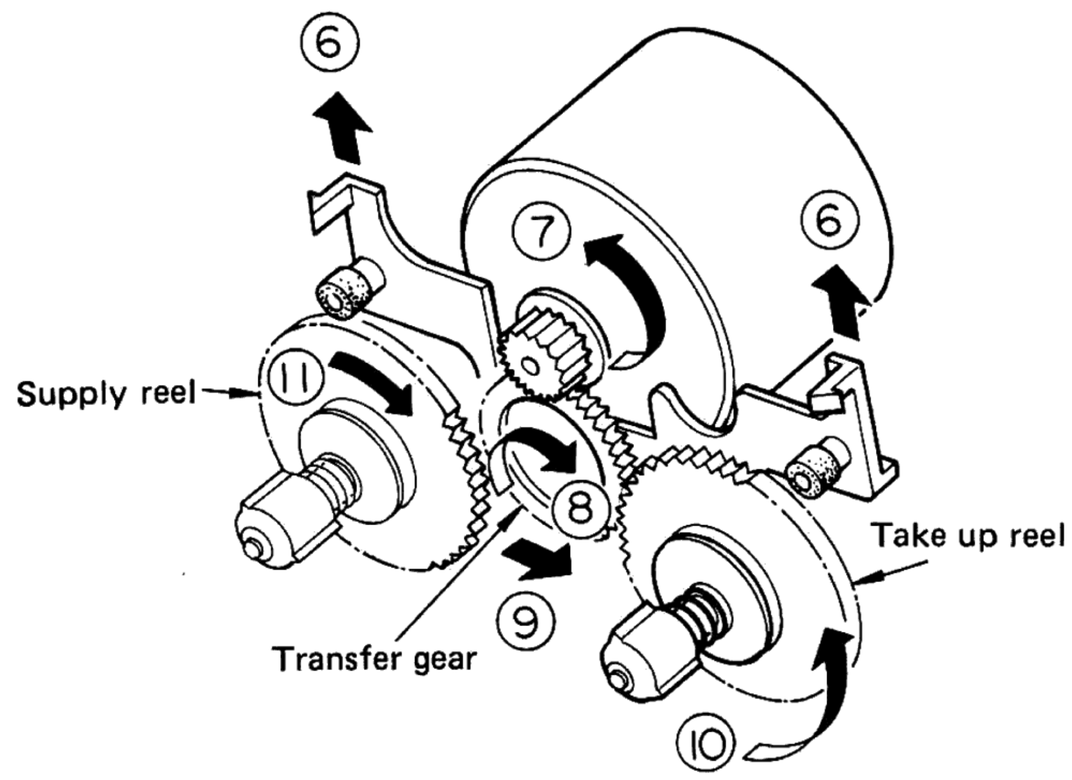

Fig. 4 PLAY operation (3)

4. STOP operation (Refer to Fig. 2,3)

(1) When the STOP button is pressed, the reel motor stops and the solenoid is deactuated. The plunger of the solenoid then pushes down the play lock lever to disengage projection b from projeciton c, and the play cam gear begins to rotate. At the same time, the brake slider and the head base go down and the REC/PLAY head and erase head go back to the STOP mode position.

(2) Projection b comes into contact with projection a again as the play cam gear rotates.

5. FF/REWIND operation

(1) When the FF or REWIND button is pressed, solenoid D2 is actuated to pull the pause lock lever. (①)

(2) Projection d of the pause lock lever disengages from projection m of the pause cam gear. (②)

(3) When the pause lever is pulled by the pause lever spring it makes the pause cam gear rotate slightly in the direction shown by the arrow (③).

(4) The pause cam gear engages the capstan gear and the pause cam gear begins to rotate. (④)

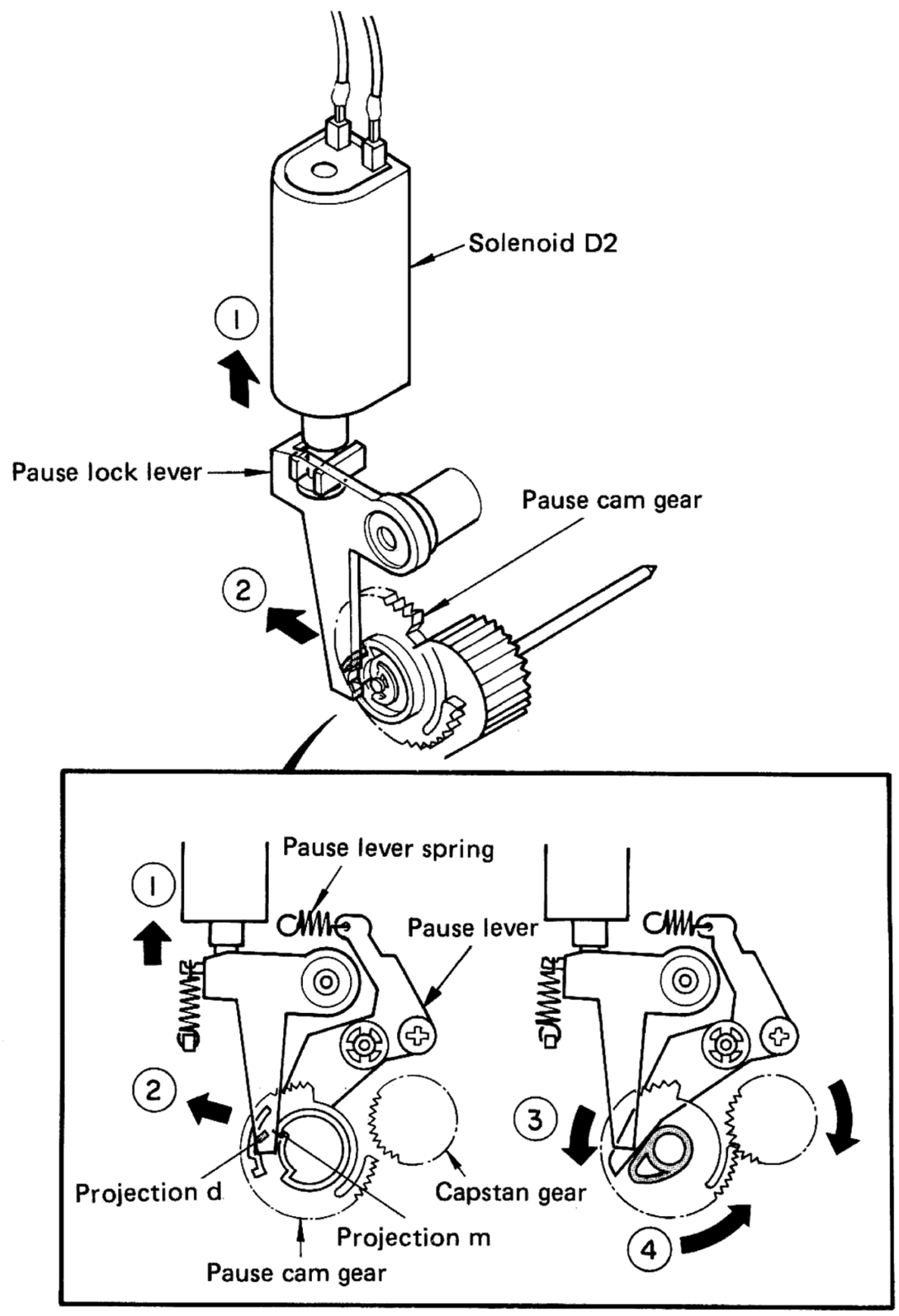

Fig. 5 FF/REWIND operation (1)

www.hifiengine.com

DESCRIPTION OF MECHANISM OPERATION

6. FF/REWIND operation (2)

(1) The pause cam gear is driven by the capstan gear to rotate in the direction shown by the arrow (④) and stops when the non-toothed portion of the pause cam gear is met by the capstan gear.

(2) When the pause lever is pulled by the pause lever spring, it makes the pause cam gear rotate slightly by pushing it. Then projection d of the pause lock lever comes into contact with projection e of the pause cam gear and the pause cam gear stops. (⑤)

(3) The pause lever is rotated by the cam of the pause cam gear in the direction shown by the arrow (⑥). Projection f of the pause lever makes the brake lever rotate in the direction shown by the arrow (⑦) during operation (1) and (2) above, the brake lever pushes up the brake slider (⑧) and the brake slider disengages itself from the take-up reel and the supply reel. (⑨)

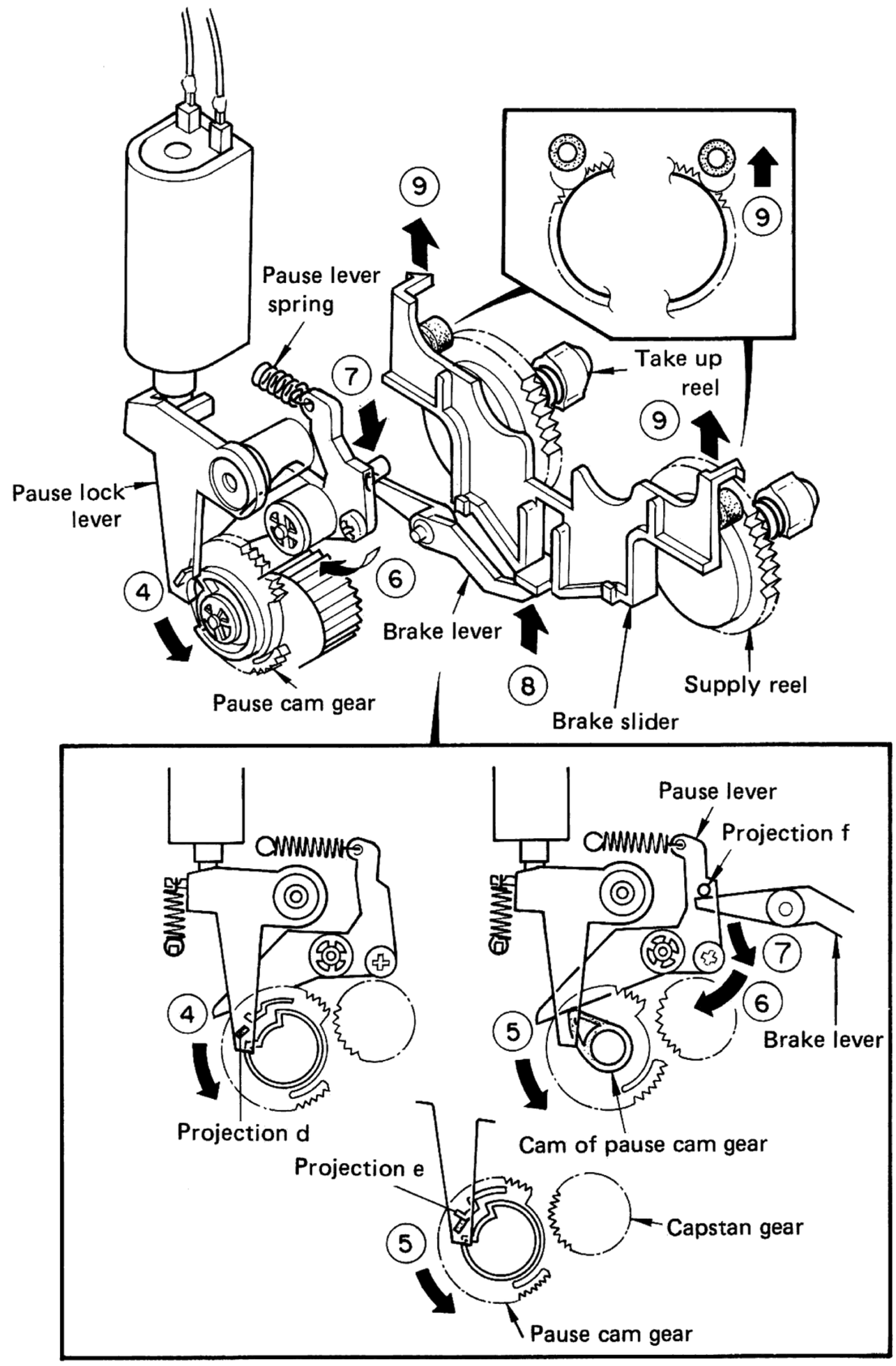

Fig. 6 FF/REWIND operation (2)

7. FF/REWIND operation (3)

(1) The motor gear rotates in the direction shown by the arrow (⑩) during the FORWARD/FF.
The transfer gear rotates in the direction shown by the arrow (⑪) and moves laterally in the direction shown by the arrow (⑫).

(2) The transfer gear engages with the take-up reel and the take-up reel is driven to rotate in the direction shown by the arrow (⑬).

(3) The motor gear rotates in the direction opposite to that shown by the arrow (⑩) and the transfer gear is moved in the direction opposite to that shown by the arrow (⑫) during the FORWARD/REWIND.
The transfer gear then engages with the supply reel and the supply reel is rotated in the direction shown by the arrow (⑭).

(4) The REVERSE/FF and REVERSE/REWIND operations are the same as the FORWARD/REWIND and FORWARD/FF operations except that the angle of the head is different.

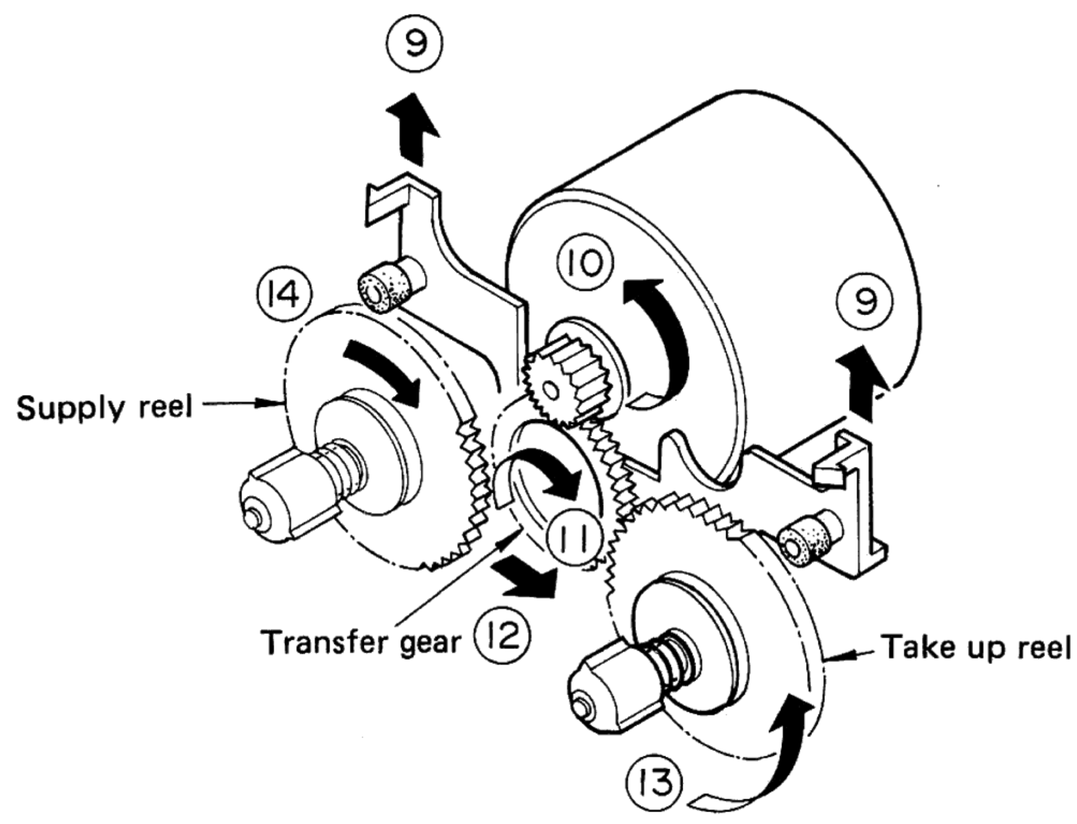

Fig. 7 FF/REWIND operation (3)

www.hifiengine.com

8. PAUSE and DPSS operations

(1) Since the PAUSE and DPSS operations are both entered from the PLAY operation, the solenoid has been activated, the brake slider has been detached from the take-up and supply reels, and the head base has been lifted.

(2) When the PAUSE button is pressed, the solenoid D2 is activated by the microcomputer to pull the pause lock lever.

(3) The pause cam gear begins to rotate as the result of the same operations as those of the FF and REWIND operations . (See (2) to (4) in 5. FF and REWIND operations (1))

(4) The cam of the pause cam gear rotates the pause lever in the direction shown by the arrow (④) and the arm of the pause lever pushes down the head base. (⑤,⑥)

(5) Projection e of the pause cam gear comes into contact with projection d of the pause lock lever. The pause cam gear then stops rotating.

(6) During PAUSE operation the tape is lightly in contact with the REC/PLAY head, and the reel motor stops. During DPSS operation the mechanism is in the same setting as in the PAUSE operation and the reel motor is rotating at the same speed as in the FF and REWIND operations.

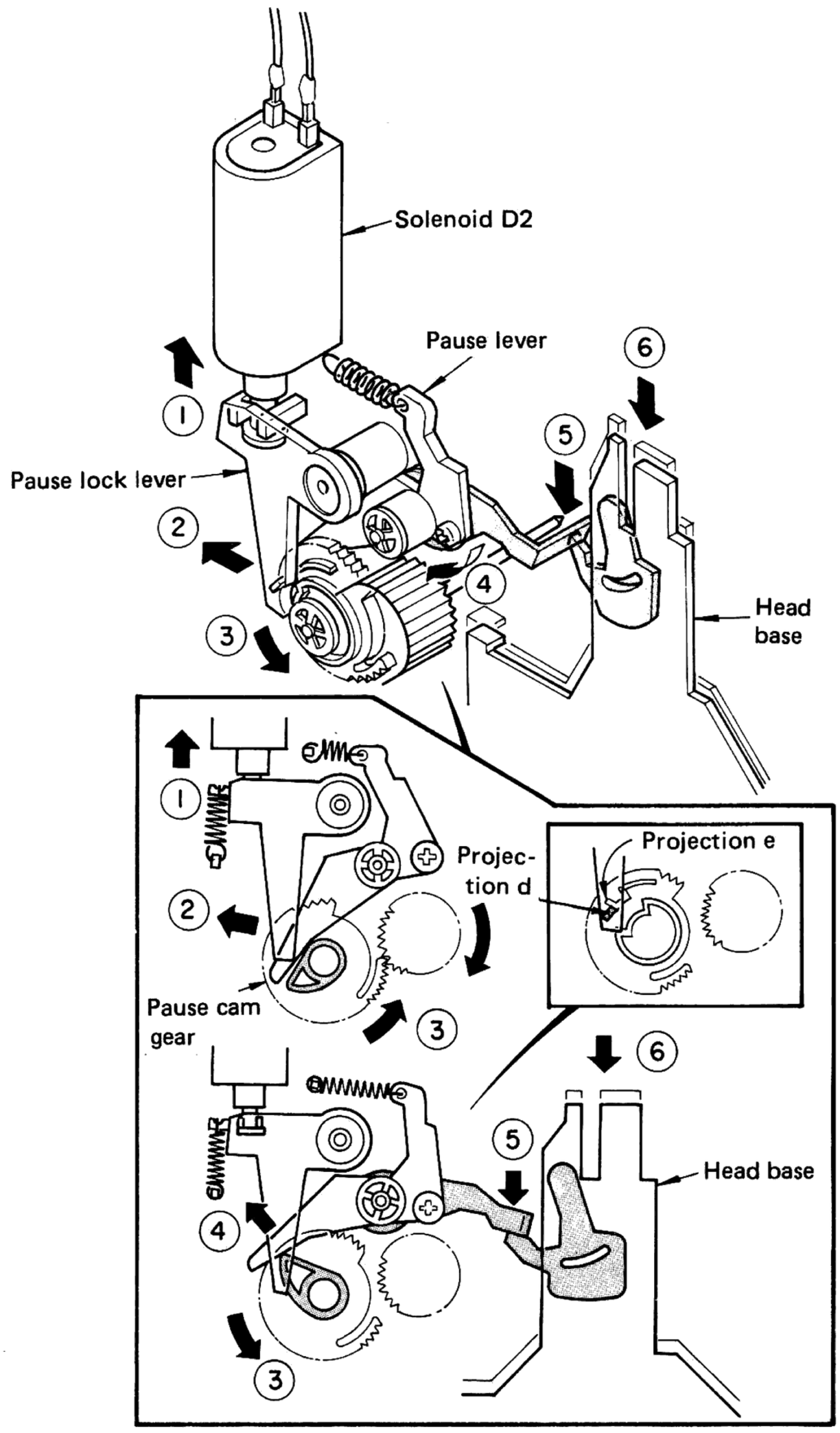

Fig. 8 PAUSE and DPSS operations

www.hifiengine.com

DESCRIPTION OF MECHANISM OPERATION

9. Switching from REVERSE to FORWARD

(1) The mechanism resumes PLAY operation via the STOP state when REVERSE operation is switched to FORWARD operation.

(2) During this operation the shift lever is pressed by the shift lever spring in the direction shown by the arrow (①).

(3) The reverse lever is rotated in the direction shown by the arrow (③) due to the rotation of the play cam gear in the direction shown by the arrow (②).

(4) Projection h of the reverse lever comes into contact with projection g of the shift lever and rotates it in the direction shown by the arrow (④). The shift lever then pushes the reverse slider in the direction shown by the arrow (⑤).

(5) The reverse slider rotates the head shift gear in the direction shown by the arrow (⑥) to rotate the head gear in the direction shown by the arrow (⑦). The REC/PLAY head is also rotated from the REVERSE/PLAY position to the FORWARD/PLAY position. (Fig. 9 shows the mechanism after head rotation.)

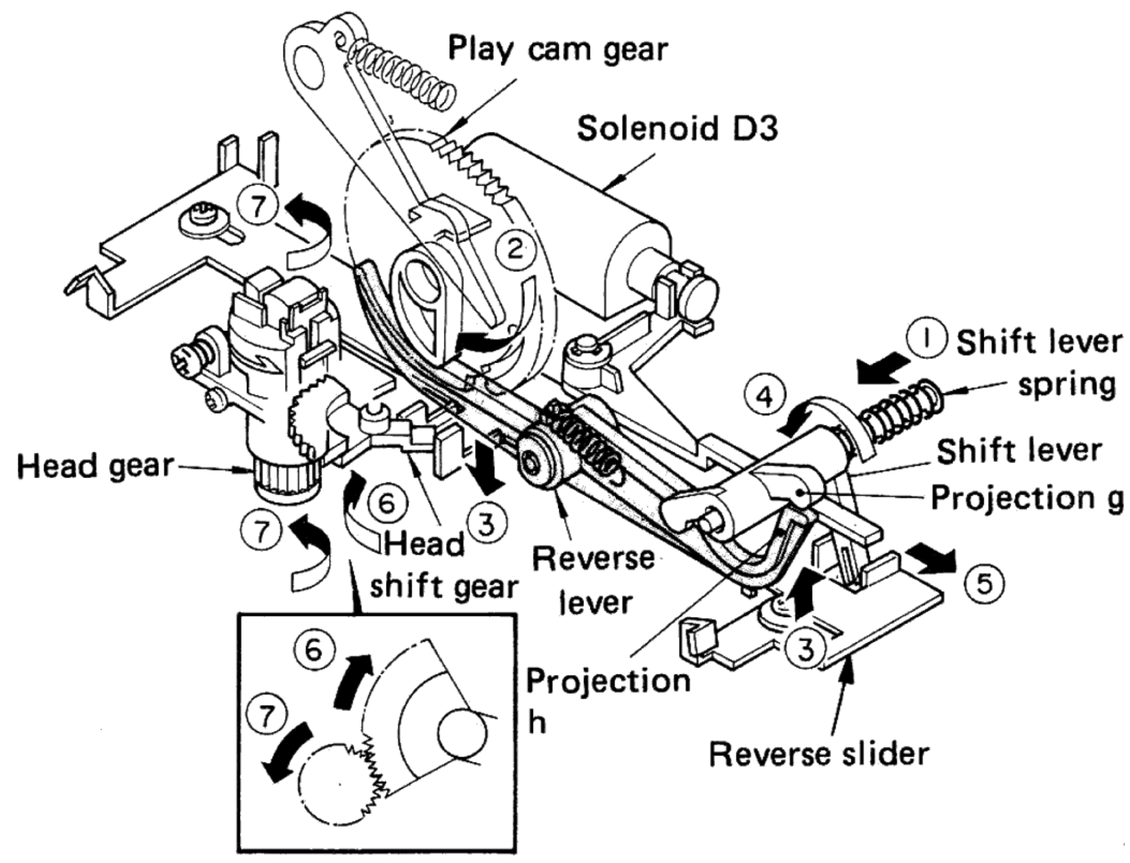

Fig. 9 Switching from REVERSE to FORWARD

10. Switching from FORWARD to REVERSE

(1) When the REVERSE/PLAY button is pressed solenoid D3 is actuated and pulls the solenoid lever (①).

(2) The solenoid lever rotates in the direction shown by the arrow (②) and the shift lever is moved by the solenoid lever in the direction shown by the arrow (③).

(3) In PLAY operation, the play cam gear rotates (④) and the cam rotates the reverse lever in the direction shown by the arrow (⑤).

(4) Projection i of the reverse lever comes into contact with projection j of the shift lever (⑥), and the shift lever is rotated in the direction shown by the arrow (6). The reverse slider then slides in the direction shown by the arrow (⑦).

(5) The head shift gear and head gear are rotated by the reverse slider and the REC/PLAY head is rotated toward the REVERSE position. (⑧ and ⑨) (Fig. 10 shows the mechanism after head rotation.)

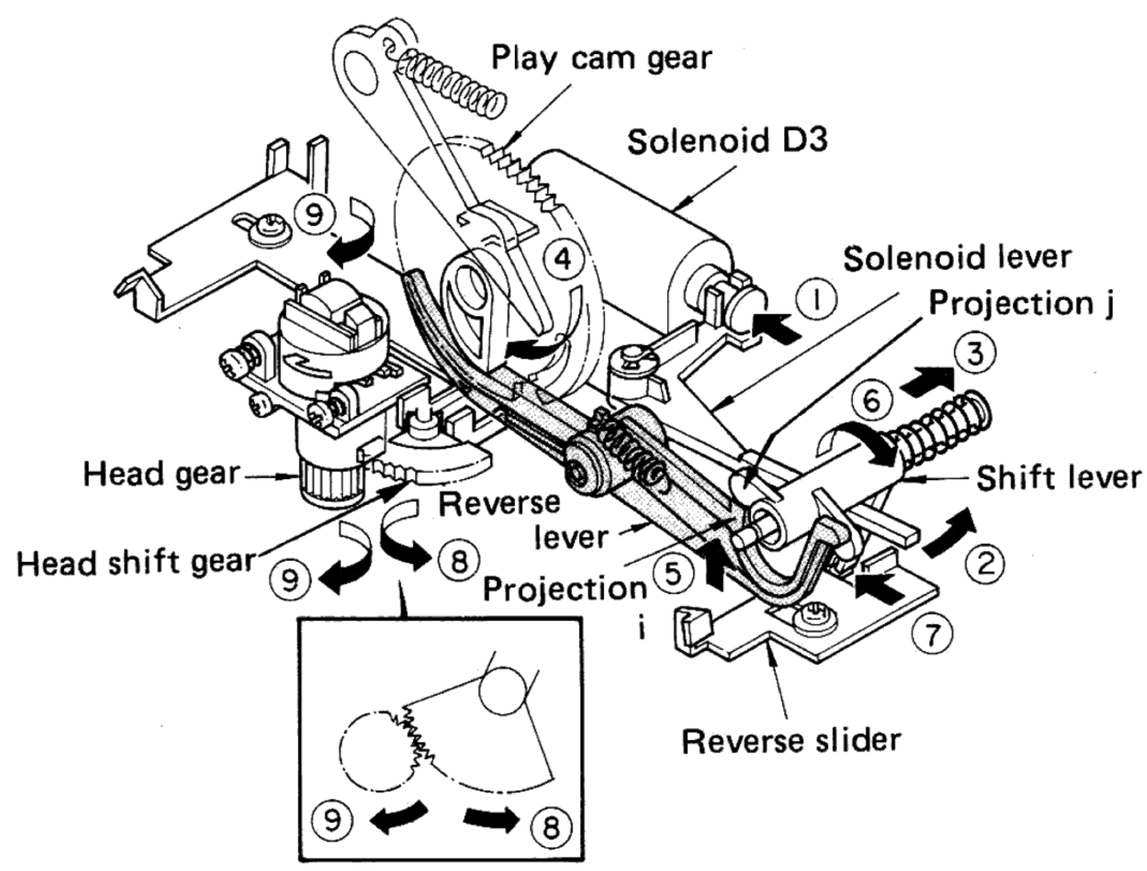

Fig. 10 Switching from FORWARD to REVERSE

www.hifiengine.com

DESCRIPTION OF MECHANISM OPERATION

11. Pinch roller and tape guide positioning mechanism

(1) A pinch roller, capstan, and tape guide are provided for each of the FORWARD and REVERSE operations in this model. In FORWARD operation the reverse slider is moved in the direction shown by the arrow (①).

(2) During PLAY operation the pinch roller and the tape guide rise as the head base rises. However, the pinch roller (L) is stopped at the point where the pinch roller lever (L) comes into contact with projection k of the reverse slider. Since the head base continues to rise after the pinch roller has stopped rising, the guide lever (L) rotates in the direction shown by the arrow (②) to push up the photo-coupler ass'y. (③)

(3) The pinch roller (R) rises as the head base rises until it comes into contact with the capstan. The guide lever (R) is rotated in the direction shown by the arrow (④) to pull down the tape guide (R) after the pinch roller (R) has come into contact with the capstan. (⑤)

(4) In REVERSE/PLAY operation, the movements of the left pinch roller and tape guide and those of the right ones are interchanged, other operations are the same as those for FORWARD/PLAY operation.

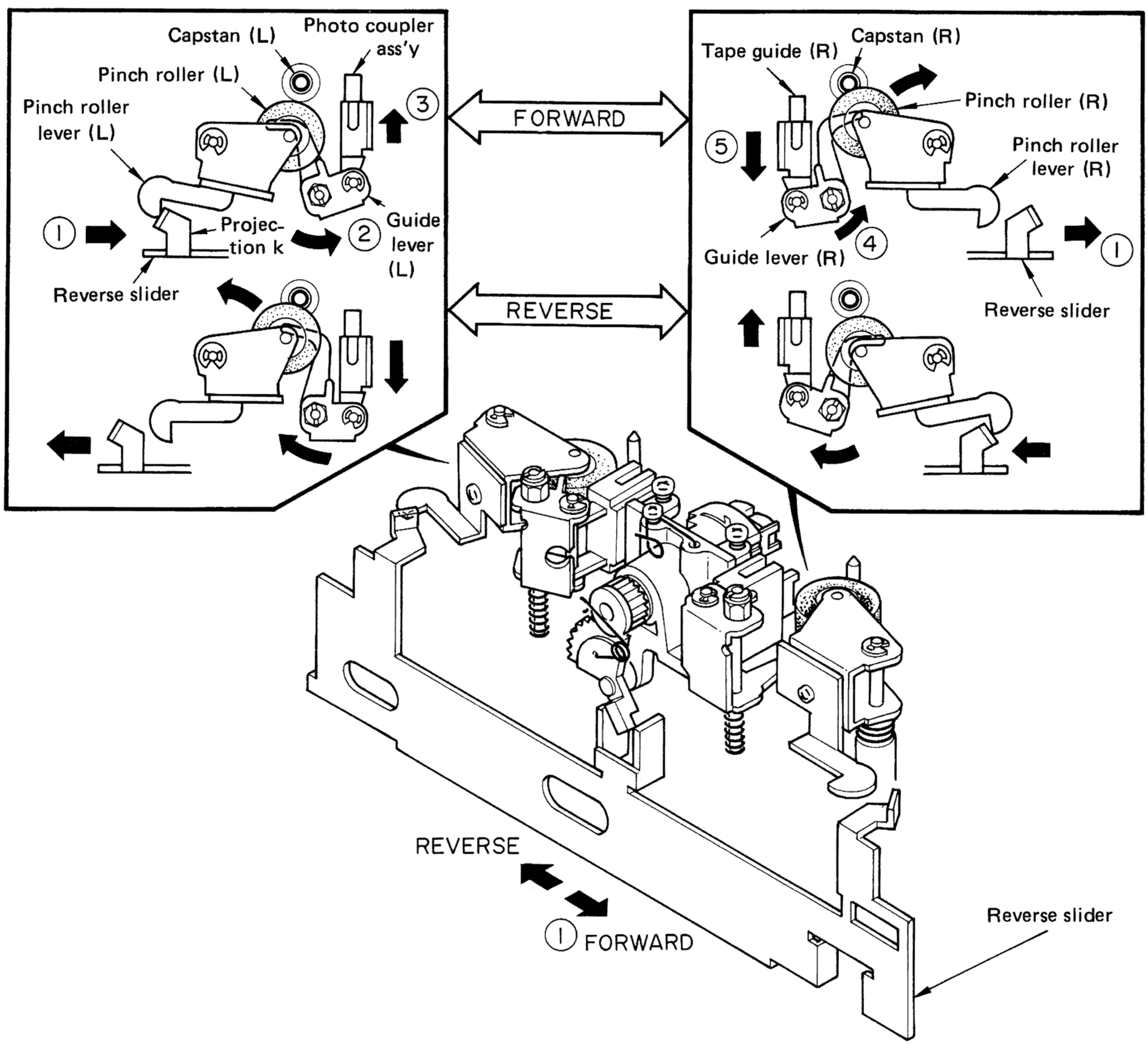

Fig. 11 Pinch roller and tape guide positioning mechanism

www.hifiengine.com

DISASSEMBLY

1. Reel motor replacement

(1) Remove two screws on the front panel. (①)

(2) To mount the motor, confirm that at least 2/3 of the motor gear and transfer gear teeth engages. (②) and mount the reel motor, positioning its terminal approximately in the horizontal position. (③)

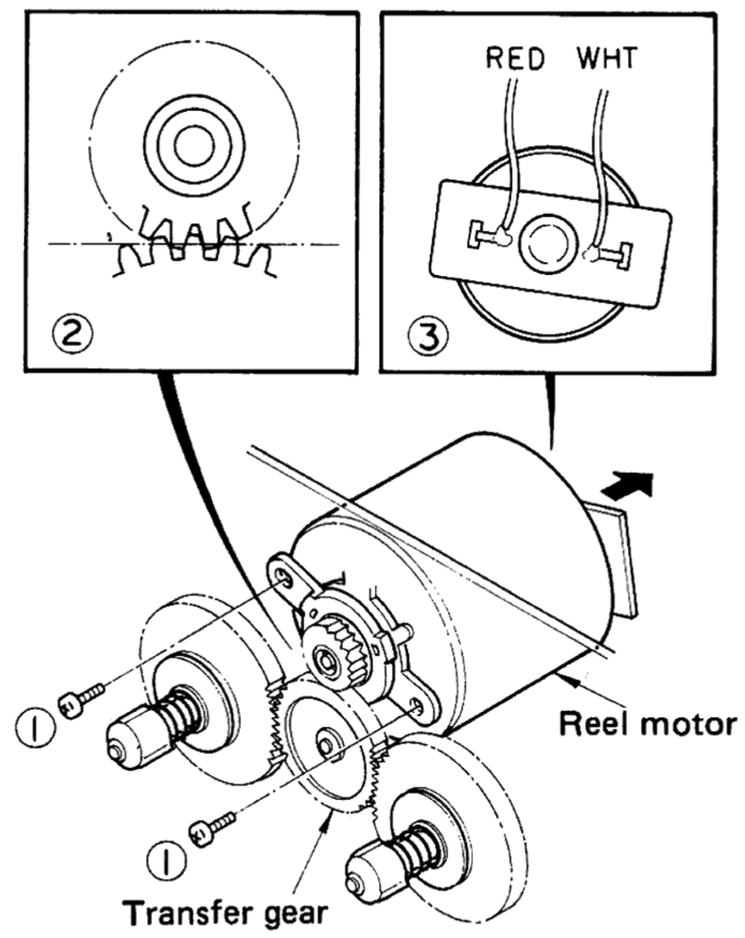

Fig. 12 Reel motor replacement

2. Main motor replacement

(1) Slip the belf off the main motor pulley and hook it on the shaft on the mechanism chassis. (①)

(2) Remove the screws retaining the PC board (②) and 6 screws retaining the motor bracket. (③)

(3) Replace the motor.

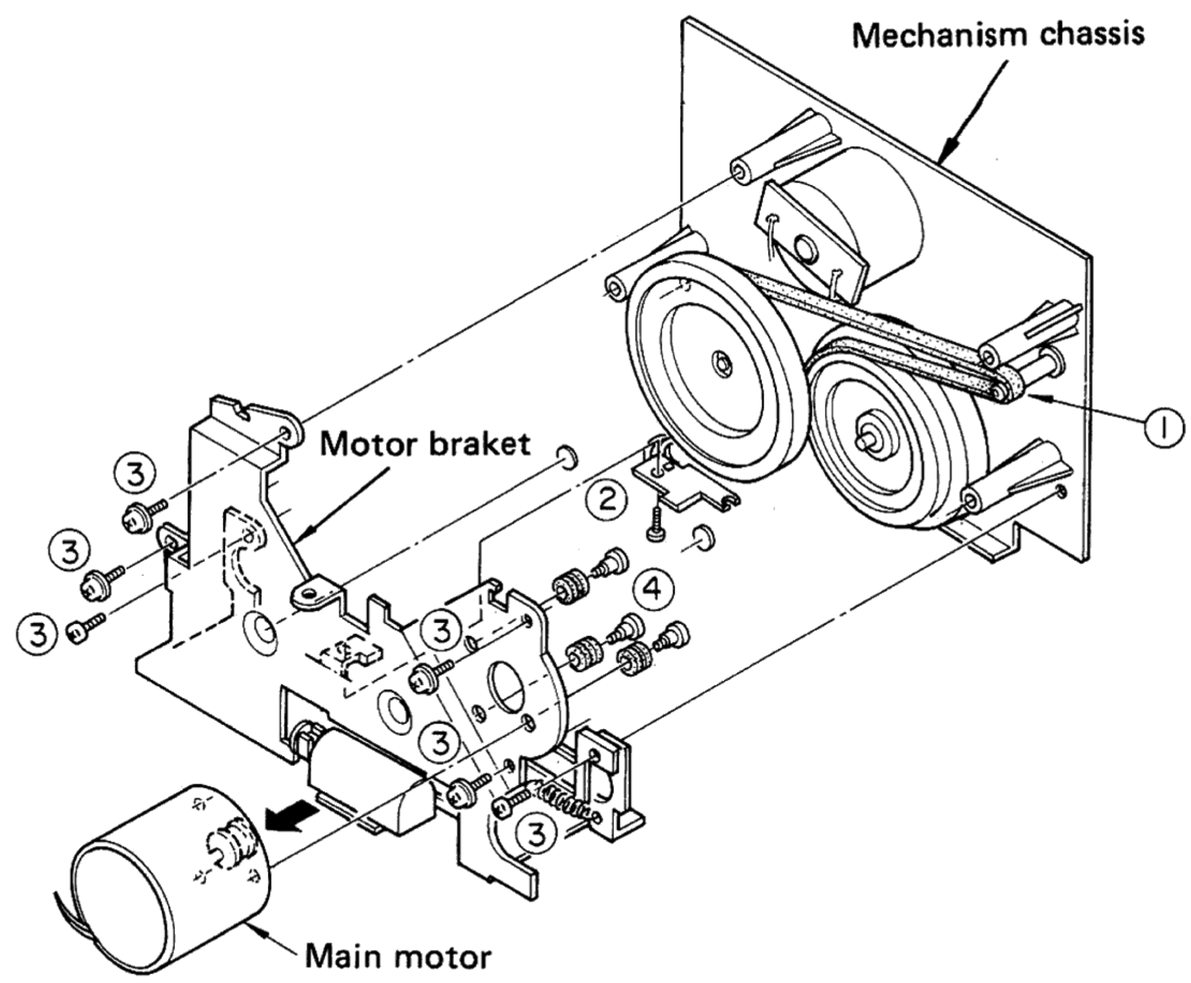

Fig. 13 Main motor replacement

3. Quick-sensor replacement

(1) Demount the mechanism ass'y (Refer to the KX-71R service manual.)

(2) Remove the PC board (①) and disconnect the soldered lead wire from the quick-sensor.

(3) Remove the nut. (③)

(4) Slip off the E ring.

Note: Adjust the position of the tape guide after the quick-sensor replacement.

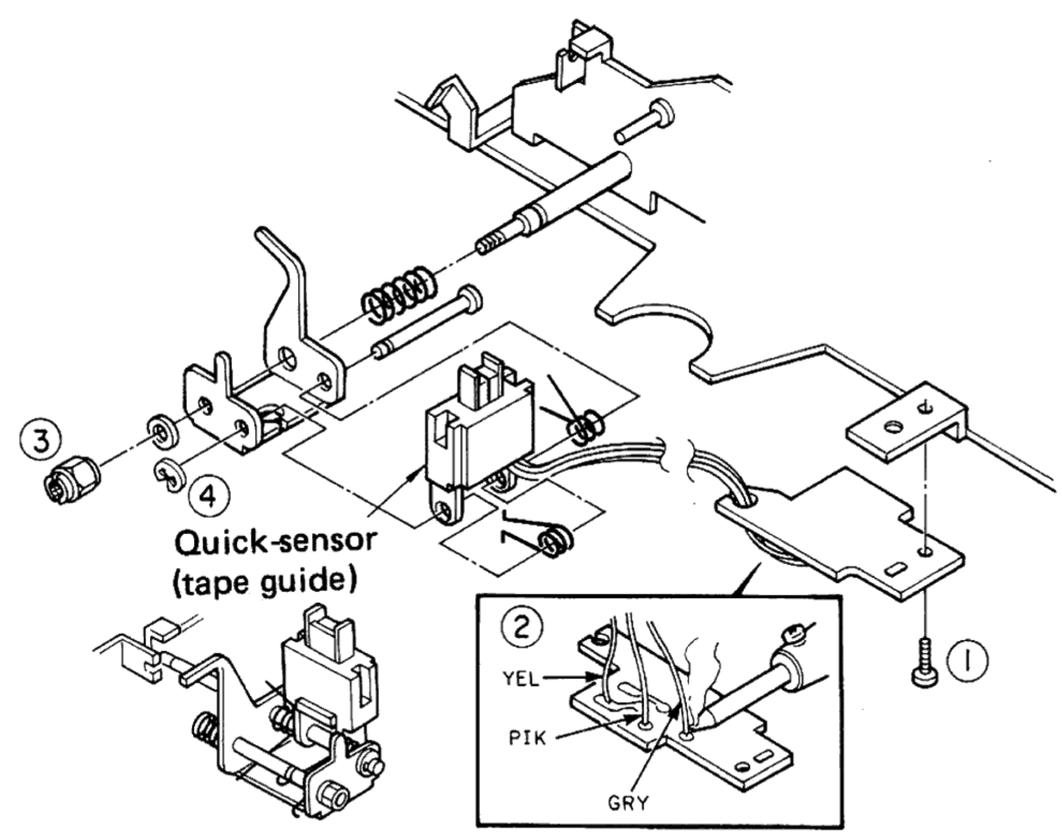

Method of mounting tape guide spring

Fig. 14 Quick-sensor replacement

www.hifiengine.com

DISASSEMBLY

4. REC/PLAY head replacement

(1) Demount the mechanism ass'y. (Refer to the KX-71R service manual.)

(2) Remove the PC board (①) and disconnect the soldered wire from the head.

(3) Remove 2 screws and demount the head block. (②)

Note: The azimuth of the head and the position of the tape guide will have to be adjusted head replacement.

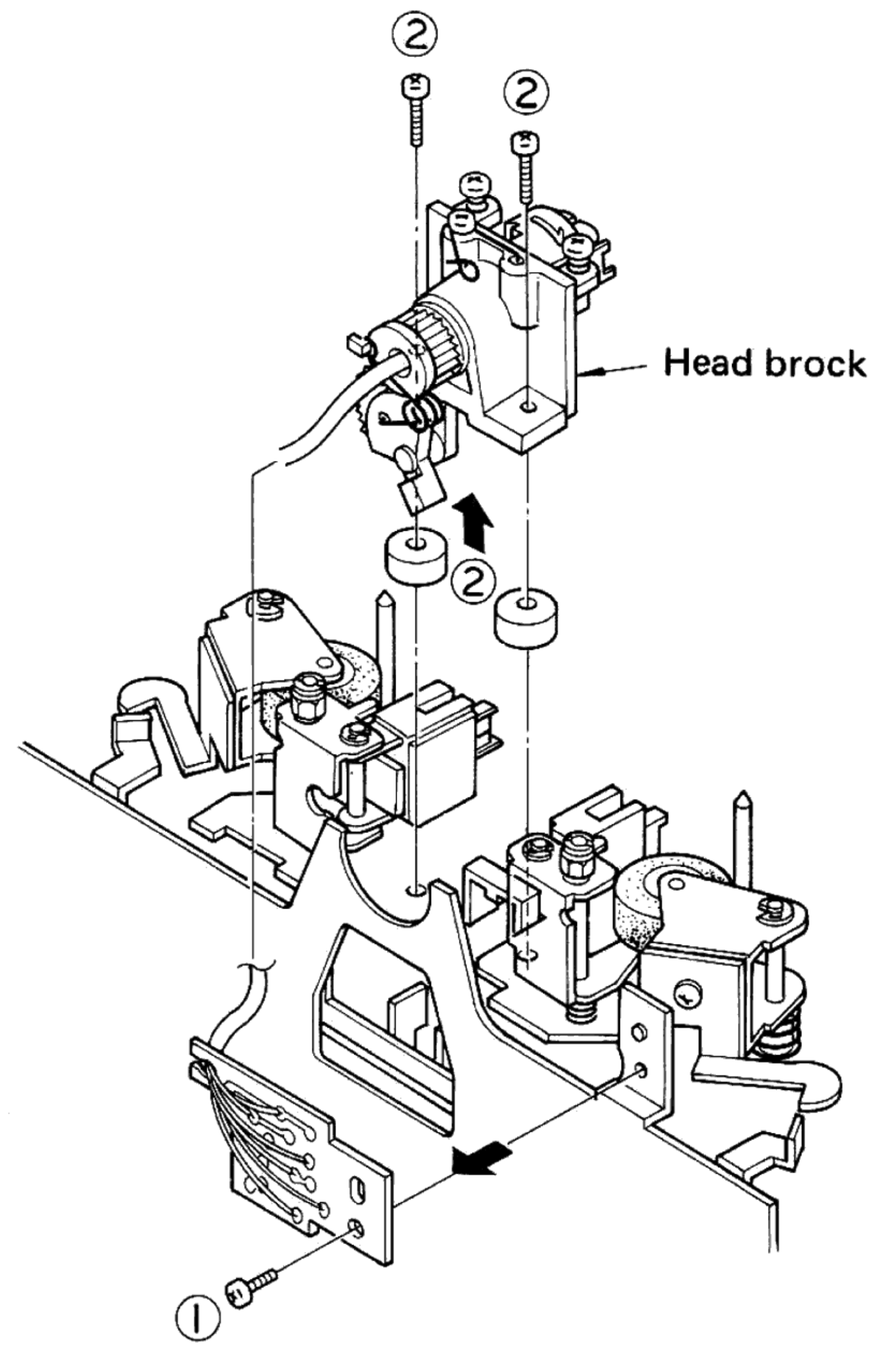

Fig. 15 REC/PLAY head replacement

5. Method for demounting cassette holder ass'y

(1) Remove the front panel.

(2) Remove the rivet and demount the PC board. (①)

(3) Unhook the holder spring from the damper arm. (②)

(4) Remove the damper arm from the cassette holder ass'y. (③)

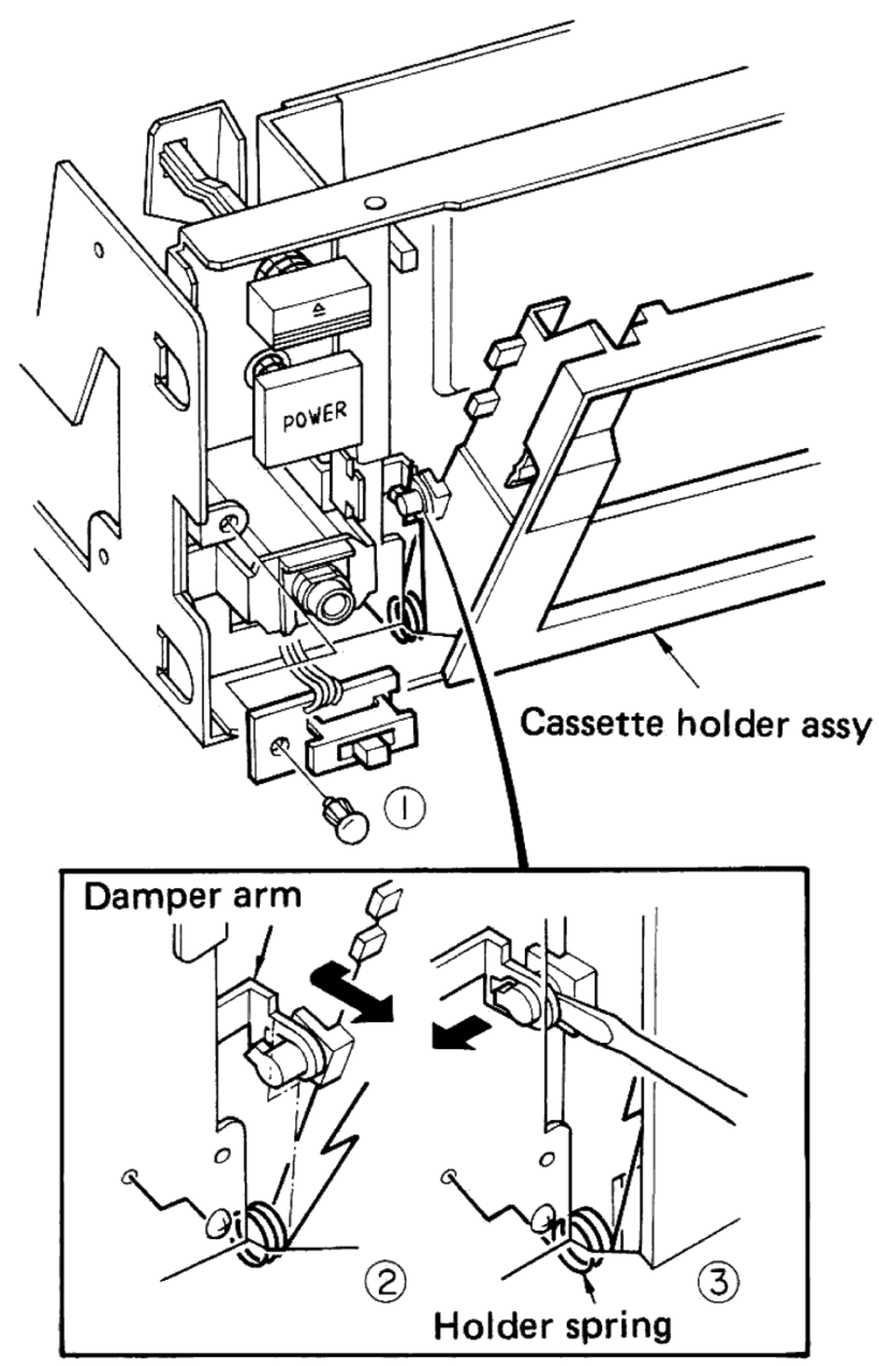

Fig. 16 Method for demounting cassette holder ass'y (1)

www.hifiengine.com

(5) Remove the cassette holder ass'y from the mechanism ass'y pressing it at the point shown by the arrow④. (⑤)

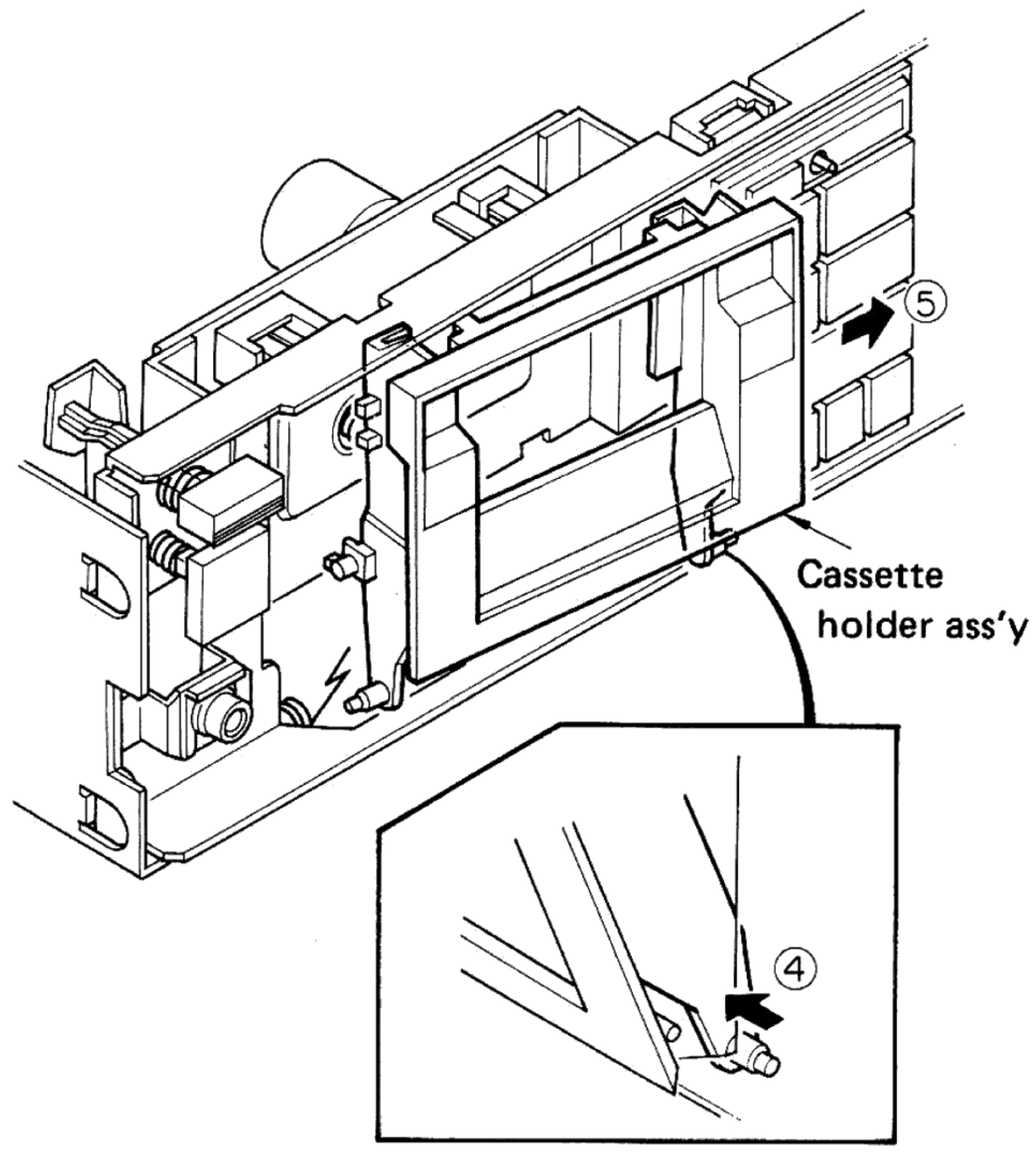

Fig. 17 Method for demounting cassette holder ass'y (2)

Adjustment

1. Tape guide position adjustment

(1) Demount the cassette holder ass'y

(2) Load a mirror tape.

(3) Adjust the height of the tape guide so that the tape edge does not curl in the FORWARD/PLAY (Ⓐ) and REVERSE/PLAY (Ⓑ) operations.

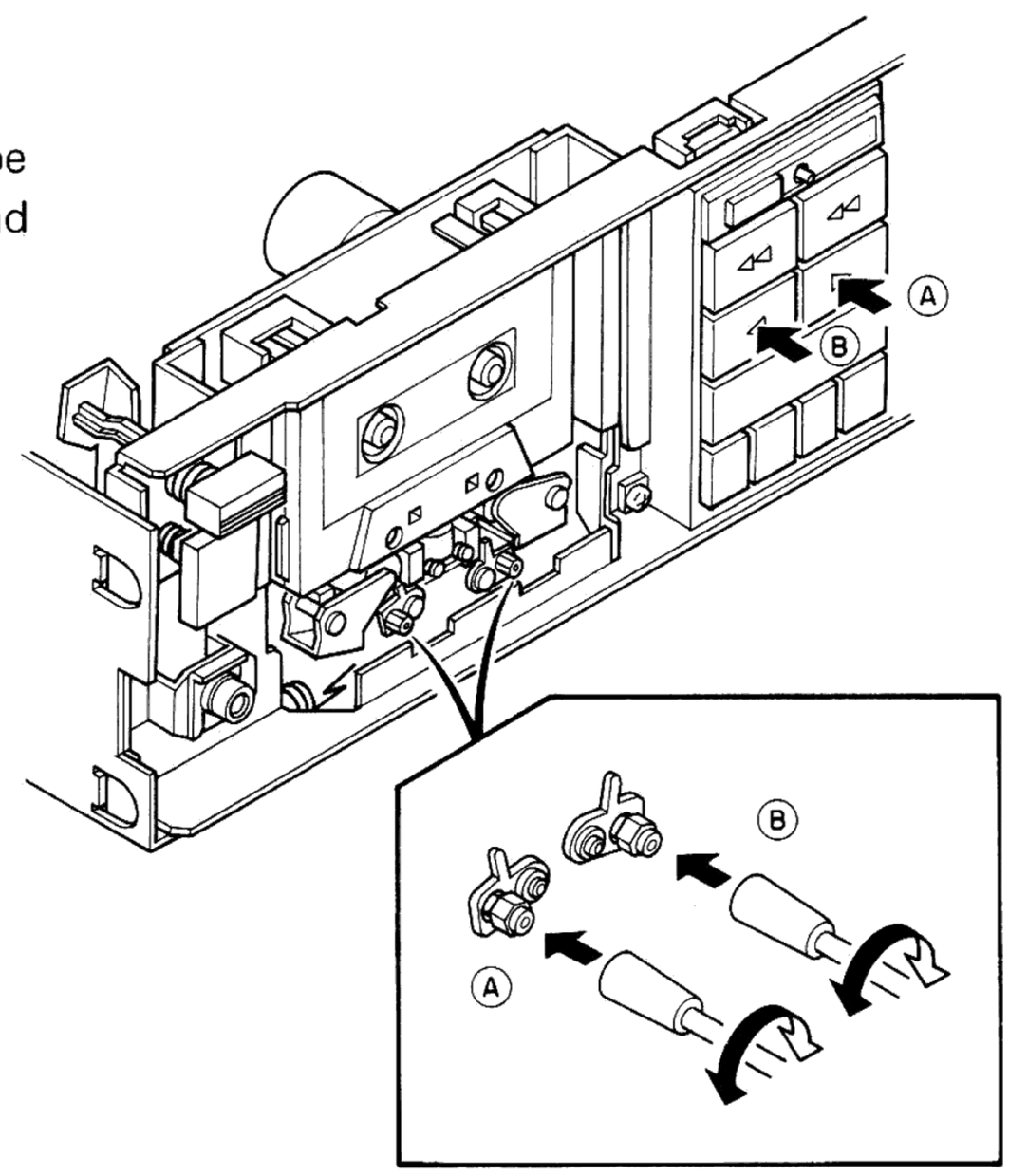

Fig. 18 Tape guide position adjustment

www.hifiengine.com

EXPLODED VIEW

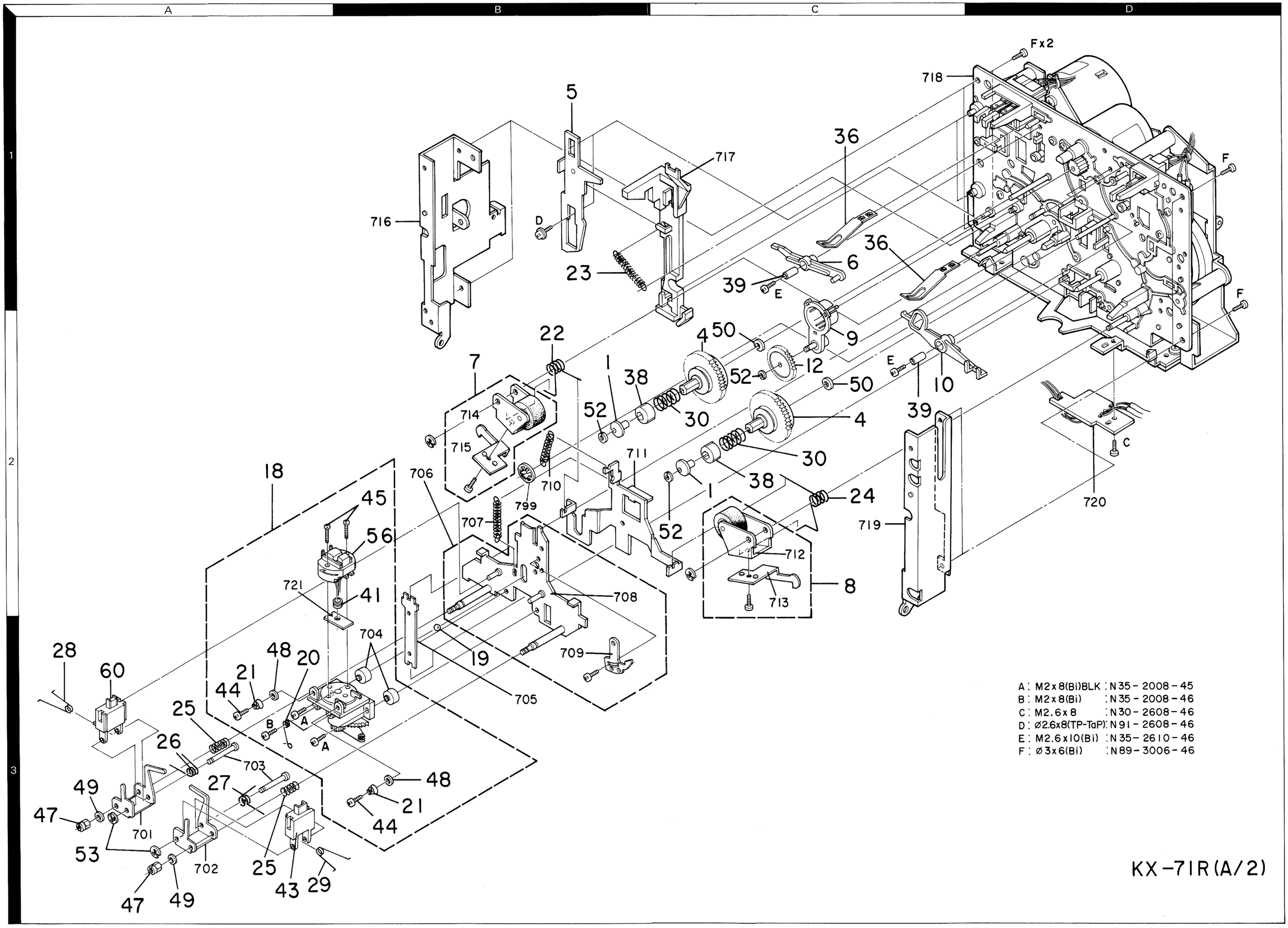

A : M2x8(Bi)BLK : N35-2008-45
B : M2x8(Bi) : N35-2008-46
C : M2.6x8 : N30-2608-46
D : Ø2.6x8(TP-TaP) : N91-2608-46
E : M2.6x10(Bi) : N35-2610-46
F : Ø3x6(Bi) : N89-3006-46

KX-71R(A/2)

EXPLODED VIEW

CHASSIS REAR SIDE VIEW

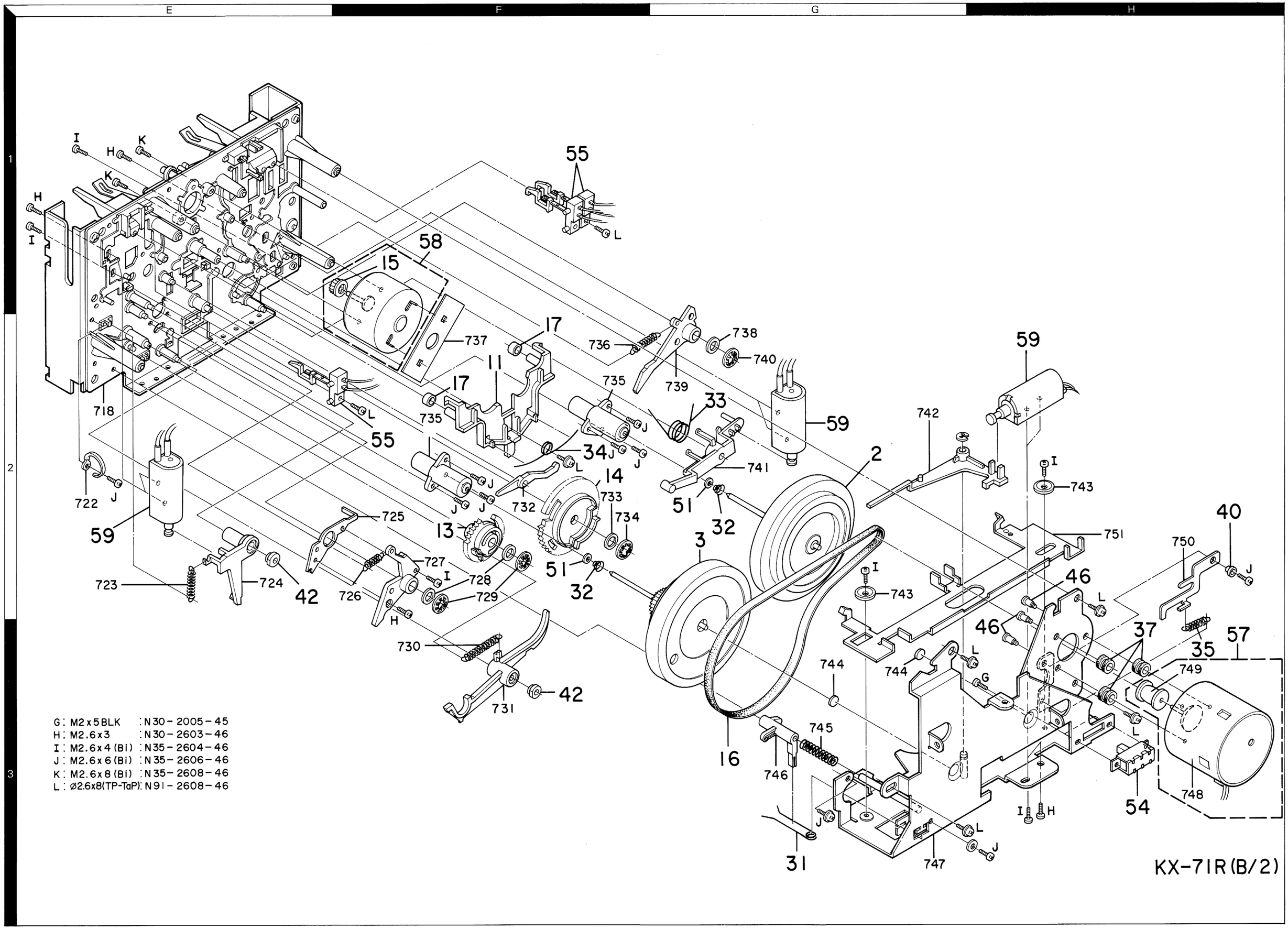

PARTS LIST

* New Parts
Parts without **Parts No.** are not supplied.
Les articles non mentionnes dans le **Parts No.** ne sont pas fournis.
Teile ohne **Parts No.** werden nicht geliefert.

Ref. No. 参照番号	Address 位置	New Parts 新	Parts No. 部品番号	Description 部品名／規格	Destination 仕向	Remarks 備考
CASSETTE MECHANISM ASS'Y (D40-0255-05)						
1	2B,2C	*	B09-0025-08	CAP		
2	2G	*	D01-0044-08	FLYWHEEL(L)		
3	2G	*	D01-0045-08	FLYWHEEL(R)		
4	2C	*	D03-0210-08	REEL		
5	1B	*	D10-0315-08	SLIDER(EJECT)		
6	1C	*	D10-0328-08	TRANSFER LEVER		
7	2B	*	D10-0329-08	PINCH ROLLER ASSY (L)		
8	2C	*	D10-0330-08	PINCH ROLLER ASSY (R)		
9	2C	*	D10-0331-08	LEVER ASSY		
10	2C	*	D10-0332-08	RELEASE LEVER		
11	2F	*	D10-0333-08	BRAKE SLIDER		
12	2C	*	D13-0084-08	TRANSFER GEAR		
13	2F	*	D13-0085-08	PAUSE CAM GEAR		
14	2F	*	D13-0086-08	PLAY CAM GEAR		
15	1F	*	D13-0087-08	GEAR		
16	3G	*	D16-0079-08	BELT		
17	2F	*	D31-0009-08	BRAKE RUBBER		
18	2A	*	D40-0275-08	HEAD BLOCK		
19	3B	*	D90-0024-08	STEEL BALL		
20	3A	*	G01-1256-08	HOLDER SPRING		
21	3A,3B	*	G01-1257-08	SPRING		
22	2B	*	G01-1258-08	SPRING		
23	1B	*	G01-1259-08	LOCK SLIDER SPRING		
24	2C	*	G01-1260-08	PINCH ROLLER SPRING		
25	3A	*	G01-1261-08	TAPE GUIDE LEVER SPRING		
26	3A	*	G01-1262-08	TAPE GUIDE SPRING(A)(L)		
27	3A	*	G01-1263-08	TAPE GUIDE SPRING(A)(R)		
28	3A	*	G01-1264-08	TAPE GUIDE SPRING(B)(L)		
29	3B	*	G01-1265-08	TAPE GUIDE SPRING(B)(R)		
30	2C	*	G01-1266-08	SPRING(REEL)		
31	3G	*	G01-1267-08	SPRING		
32	2F,2G	*	G01-1268-08	SPRING(FLYWHEEL)		
33	2G	*	G01-1269-08	PLAY LOCK LEVER SPRING		
34	2F	*	G01-1270-08	BRAKE SPRING		
35	2H	*	G01-1271-08	ASSIST LEVER SPRING		
36	1C	*	G02-0105-08	FLAT SPRING		
37	3H	*	G13-0140-08	MOTOR CUSHION		
38	2B,2C	*	J31-0185-08	COLLAR(A)		
39	1C,2C	*	J31-0186-08	COLLAR(B)		
40	2H	*	J31-0187-08	COLLAR(C)		
41	2B	*	J42-0104-08	BUSH		
42	2E,3F	*	J42-0105-08	BUSH		
43	3A	*	J90-0118-08	TAPE GUIDE		
44	3A,3B	*	N09-1256-08	SCREW		
45	2B	*	N09-1257-08	SCREW		
46	2H	*	N09-1259-08	SCREW		
47	3A	*	N14-0135-08	NUT		
48	3A,3B	*	N19-0348-08	WASHER		
49	3A	*	N19-0349-08	WASHER		
50	2C	*	N19-0350-08	WASHER		
51	2F,2G	*	N19-0351-08	WASHER		

E: Scandinavia & Europe **H**:Audio Club **K**: USA **P**: Canada
S: South Africa **T**: England **U**: PX(Far East, Hawaii)
UE: AAFES(Europe) **X**: Australia **M**: Other Areas

www.hifiengine.com

PARTS LIST

* New Parts
Parts without **Parts No.** are not supplied.
Les articles non mentionnes dans le **Parts No.** ne sont pas fournis.
Teile ohne **Parts No.** werden nicht geliefert.

Ref. No. 参照番号	Address 位置	New Parts 新	Parts No. 部品番号	Description 部品名／規格	Destination 仕向	Remarks 備考
52	2B,2C	*	N29-0060-08	RING		
53	3A	*	N29-0061-08	E RING		
54	3H	*	S31-1007-08	SLIDE SWITCH		
55	1F,2F	*	S46-1025-08	LEAF SWITCH		
56	2B	*	T34-0303-08	R/P HEAD		
57	3H	*	T49-0015-08	MAIN MOTOR ASSY		
58	1F	*	T49-0016-08	REEL MOTOR ASSY		
59	2E,2G	*	T94-0023-08	SOLENOID		
60	3A	*	T95-0014-08	PHOTO COUPLER ASSY		

E: Scandinavia & Europe **H**:Audio Club **K**: USA **P**: Canada
S: South Africa **T**: England **U**: PX(Far East, Hawaii)
UE: AAFES(Europe) **X**: Australia **M**: Other Areas

TRIO-KENWOOD CORPORATION
Shionogi Shibuya Building, 17-5, 2-chome Shibuya, Shibuya-ku, Tokyo 150, Japan

KENWOOD ELECTRONICS
1315 E. Watsoncenter Rd, Carson, California 90745;
75 Seaview Drive, Secaucus, New Jersey 07094, U.S.A.

TRIO-KENWOOD CANADA INC.,
1070 Jayson Court, Mississauga, Ontario, Canada L4W 2V5

TRIO-KENWOOD ELECTRONICS, N.V.
Leuvensesteenweg 504 B-1930 Zaventem, Belgium

TRIO-KENWOOD ELECTRONICS GmbH
Rudolf-Brass-Str. 20, 6056 Heusenstamm, West Germany

TRIO-KENWOOD FRANCE S.A.
5, Boulevard Ney, 75018 Paris, France

TRIO-KENWOOD (AUSTRALIA) PTY. LTD. (INCORPORATED IN N.S.W.)
4E Woodcock Place, Lane Cove, N.S.W. 2066, Australia

KENWOOD & LEE ELECTRONICS, LTD.
Wang Kee Building, 5th Floor, 34-37, Connaught Road, Central, Hong Kong

1983-1 PRINTED IN JAPAN B51-1420-10 (O) 2888

www.hifiengine.com