KENWOOD

KX-55C/77C
KX-5XC

STEREO CASSETTE DECK

SERVICE MANUAL

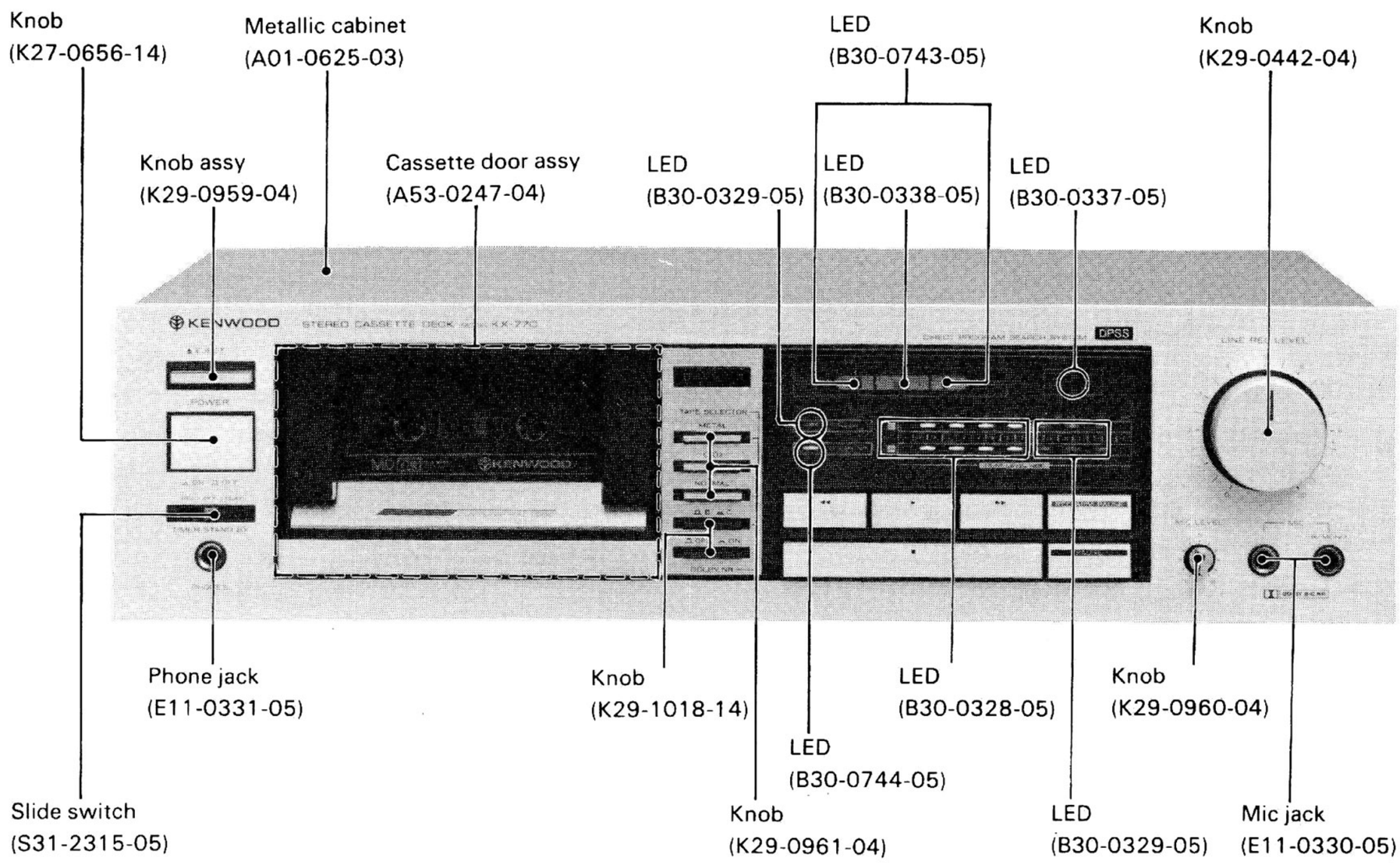

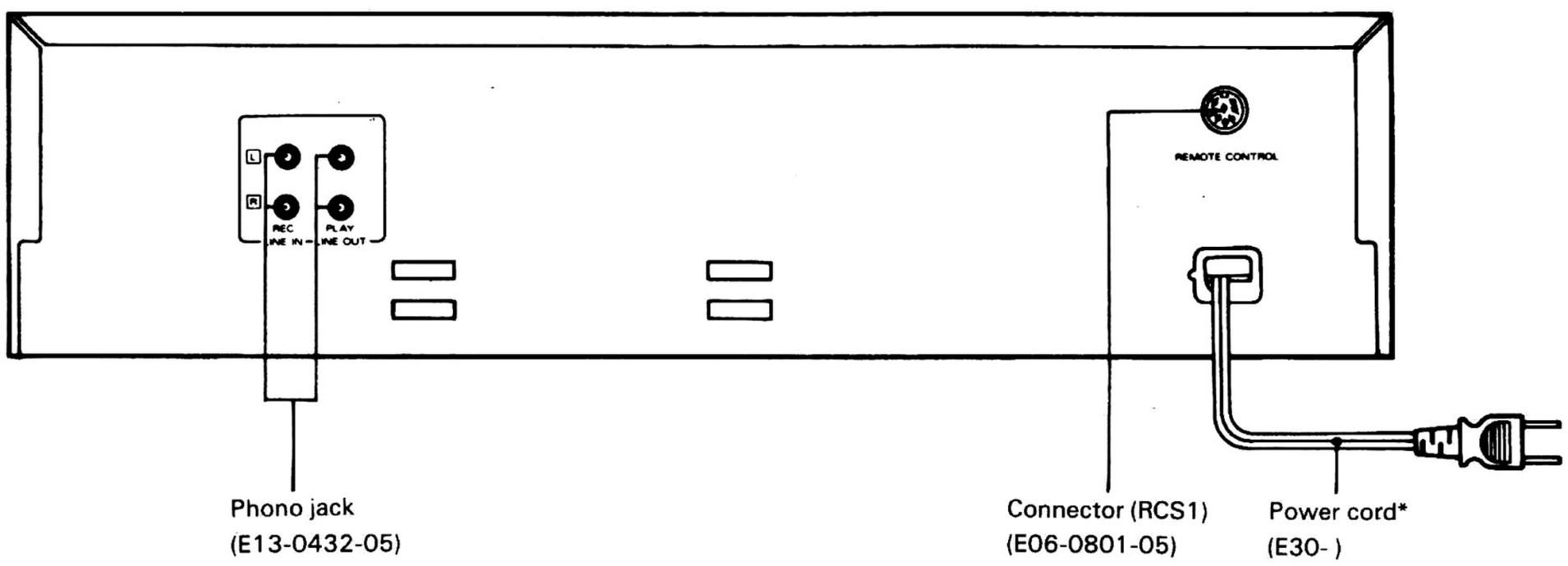

*Refer to parts list on page 13.
Photo is KX-77C

www.hifiengine.com

ADJUSTMENT

1 Notes for Adjustments

a) **Load resistance**: A pure resistance load of 100 kΩ should be connected to the LINE OUTPUT terminal.

b) **Standard level**: 0 dBs = 0.775 V

c) The electrical system should be adjusted by dividing it into playback and recording.
Adjustment of recording requires perfect performance of the playback system.
No special adjustment should be required unless inner components are replaced.

d) When the head is replaced, its stray magnetism must be completely erased by the demagnetizer prior to mounting the tape.

e) Unless otherwise designated, measurement should be carried out with the Dolby NR switch off.

2 Test Instruments, Tools and Jigs

- AC voltmeter (High input impedance)
- Audio signal generator: AG
- Oscilloscope
- Frequency counter
- Wow and flutter meter
- Weighting filter
  (ASA A characteristic with NAB curve)
- Band pass filter (Center frequency: 125 Hz, 1 kHz; Attenuation: 18 dB/oct. or more)
- Cassette type torque gage (TW-2111: T99-0208-00)
- Spring balance
- Torque dial
- Head demagnetizer
- Cleaning tape (T93-0014-05)
- Mirror tape (T93-0021-00)

3 Test Tapes

a) Test tapes for recording section adjustment
Normal: TDK AC-223 (T93-0022-05)
or KENWOOD ND
CrO_2: TDK AC-512 (T93-0019-05)
or KENWOOD CD
Metal: TDK AC-711 (T93-0020-05)
or KENWOOD MD

b) Test tapes for playback section adjustment
Tape speed and wow and flutter:
TEAC MTT-111 (T93-0015-00)
Frequency characteristic and azimuth:
TEAC MTT-256 (T93-0025-00)

4 Meaning of Technical words

a) **Standard playback condition**: The state obtained by reproducing the reference level 315 Hz signal (160 pWb/mm) of the test tape and by adjusting the playback level so that the standard output level −9 dBs = 0.27V can be obtained at the LINE OUTPUT terminal.

b) **Standard recording condition**: The state obtained by applying the 1 kHz signal to the LINE INPUT jack at the normal input level (−10 dBs) and by adjusting the RECORD LEVEL volume control so that recording can be carried out at the normal recording level.

c) **Standard recording level**: A level to obtain residual magnetic flux of 160 pWb/mm on the standard recording tape, which is 9 dB below the level 315 Hz, 0 dB (160 pWb/mm) of the test tape (MTT-256).

d) **Standard input level**: The standard input level necessary for obtaining the normal recording level. The levels at respective input jacks are as specified below.
MIC ..... −50 dBs (0 VU)
LINE INPUT ..... −20 dBs (0 VU) KX-77C
−24 dBs (0 VU) KX-55C/5XC

e) **Standard output level**: The standard signal level obtained at the LINE OUTPUT jack when the reference level 315 Hz signal is reproduced from the test tape.
MTT-256 315 Hz (160 pWb/mm)
Output level: −9 dBs

Note:
DOLBY and the double-D symbol are trademarks of Dolby Laboratories Licensing Corporation.
Noise reduction circuit made under license from Dolby Laboratories Licensing Corporation.

TEST TAPE SPECIFICATIONS

MODEL	TITLE	TIME CONSTANT	DESCRIPTION		APPLICATION
			FREQ/LEVEL	PROGRAM	
MTT-111	FLUTTER	—	3 kHz −10 dB	10 dB 3 kHz 30 Min. (Thickness 18 μm)	Tape Speed Test Wow and flutter Test
MTT-256	FREQUENCY	3180 μs and 120 μs	315 Hz ~ 14 kHz 0 dB/−20 dB 0 dB = DIN REFERENCE LEVEL −4 dB	315 10k 31.5 63 250 1k 4k 8k 12.5k 0 dB 20 dB 6.3k 315 40 125 500 2k 6.3k 10k 14k 30 30 30 10	FREQUENCY Response Test

www.hifiengine.com

ADJUSTMENT

NO.	ITEM	INPUT SETTINGS	OUTPUT SETTINGS	CASSETTE TAPE DECK SETTINGS	ALIGNMENT POINTS	ALIGN FOR	FIG.
CASSETTE DECK SECTION				TAPE SELECTOR: NORMAL			
REC/PLAY HEAD							
[1]	**DEMAGNETI-ZATION**	–	–	POWER: OFF Remove the cassette door.	REC/PLAY head	Demagnetize the REC/PLAY head with a head demagnetizer.	
[2]	**CLEANING**	–	–	PLAY	REC/PLAY head erase head, capstan, pinch roller	Clean the REC/PLAY head erase head, capstan and picnh roller using a cotton swab slightly damped with alcohol.	
[3]	**AZIMUTH**	MTT-256 10 kHz –20 dB	(A)	PLAY	Azimuth adjust-ment screw	Adjust the azimuth adjustment screw so that both channel output levels are maximized, then lock the screw with adhesive.	(a)
DC MOTOR							
(i)	**TAPE SPEED**	MTT-111	(A)	PLAY	Trimming potentiometer in the DC motor (for capstan drive)	Frequency: 3000 Hz	(b)
PC BOARD (X28-1470-10)							
(1)	**PLAYBACK LEVEL**	MTT-256 315 Hz 0 dB	(A)	PLAY	VR3(L) VR4(R)	Output level: –9 dBs	
(2)	**RECORD LEVEL**	AC-223 (C) 1 kHz –10 dBs	(A)	Rec → Playback	VR5(L) VR6(R)	Adjust LINE REC LEVEL potentiometer so that the output at LINE OUT of –9 dBs is obtained. After recording, playback and check so that the output of LINE OUT is –9 dBs.	
(3)	**BIAS CURRENT**	(C) 1 kHz, –30 dBs 10 kHz, –30 dBs	(A)	Record 1 kHz, 10 kHz signal alternately and playback.	VR9(L) VR10(R)	Adjust VR9 (VR10) so that the playback output level of 10 kHz is equal to that of 1 kHz.	
(4)	**LED PEAK LEVEL METER**	(C) 1 kHz –10 dBs	(A)	REC PAUSE	VR7(L) VR8(R)	Adjust LINE REC LEVEL so that output at LINE OUT of –9 dBs is obtained. Adjust VR7 (VR8) so that 0 dB LED segment is completely lit.	

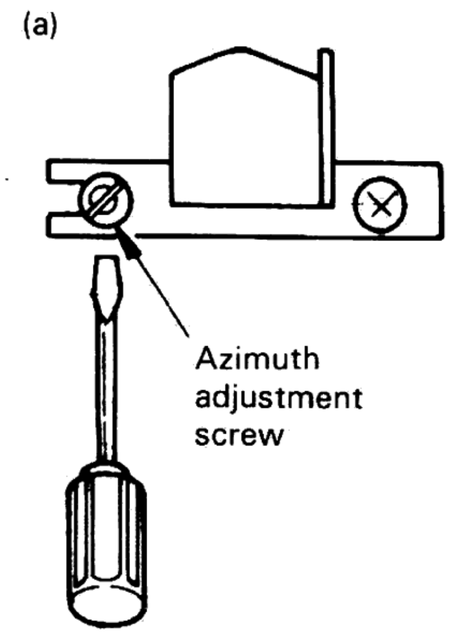

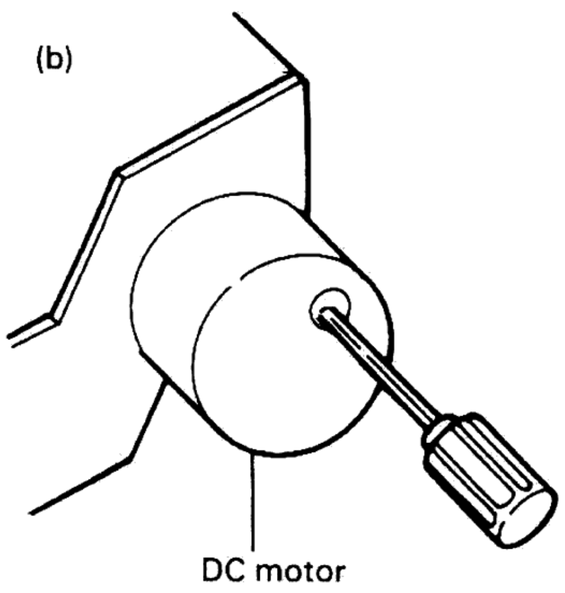

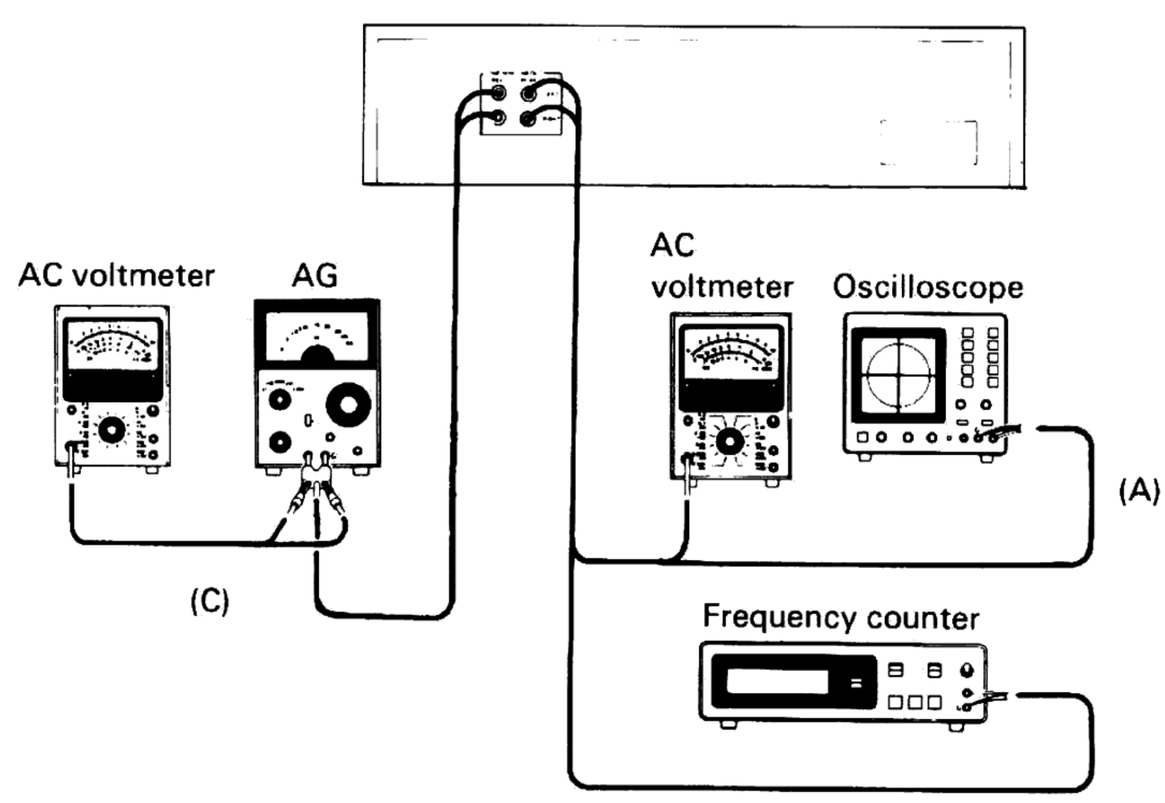

www.hifiengine.com

REGLAGES

1 Remarques concernant les réglages

a) **Résistance de charge**: Connecter une charge de résistance pure de 100 kΩ à la borne de SORTIE DE LIGNE.

b) **Niveau standard**: 0 dBs = 0.775 V

c) Ajuster le système électrique en le divisant en une reproduction et un enregistrement.
L'ajustage de l'enregistrement nécessite une performance parfaite du système de reproduction.
Aucun ajustage spécial n'est nécessaire à moins que des composants intérieurs soient remplacés.

d) Lorsque la tête de lecture est remplacée; son magnétisme parasite doit être éffacé complètement avec un appareil de démagnétisation avant de poser la bande.

e) Sauf si indiqué autrement, la mesure doit être effectuée avec l'interrupteur Dolby NR mis hors circuit.

2 Appareillages de Mesure, Outils et Gabarits

- Voltmètre CA (Impédance d'entrée élevée)
- Générateur audio fréquences
- Oscilloscope
- Fréquencemètre
- Fluctuomètre
- Filtre de pondération
  (courbe ASA A avec courbe NAB)
- Filtre passe-bande (fréquence moyenne: 125 Hz, 1 kHz
  Atténuation: 18 dB/oct. ou plus)
- Cassette de mesure de couple
  (TW-2111: T99-0208-00)
- Peson
- Torsiomètre
- Démagnétiseur
- Bande de nettoyage (T93-0014-05)
- Bande miroir (T93-0021-00)

3 Bandes d'essai

a) Bandes d'essai pour réglage de la section enregistrement
Normal: TDK AC-223 (T93-0022-05)
ou KENWOOD ND
CrO_2: TDK AC-512 (T93-0019-05)
ou KENWOOD CD
Metal: TDK AC-711 (T93-0020-05)
ou KENWOOD MD

b) Bandes d'essai pour réglage de la section lecture vitesse de défilement et pleurage et scintillement:
TEAC MTT-111 (T93-0015-00)
Réponse en fréquence et azimut:
TEAC MTT-256 (T93-0025-00)
Conditions d'enregistrement quand un signal d'entrée

4 Signification des Termes Techniques

a) **Condition de reproduction normale**: L'état obtenu par la reproduction du signal au niveau de référence de 315 Hz (160 pWb/mm) de la bande d'essai et par l'ajustage du niveau de reproduction de telle façon que le niveau de sortie normal (−9 dBs = 0,27V) puisse être obtenu à la borne de SORTIE DE LIGNE.

b) **Condition d'enregistrement normale**: L'état obtenu par l'application du signal de 1 kHz au jack d'ENTREE DE LIGNE au niveau d'entrée normal (−10 dBs) et par l'ajustage de la commande de volume du NIVEAU D'ENREGISTREMENT de sorte que l'enregistrement puisse être effectué au niveau d'enregistrement normal.

c) **Niveau d'enregistrement normal**: Un niveau pour obtenir un flux magnétique résiduel de 160 pWb/mm sur la bande d'enregistrement standard qui est de 9 dB plus bas que le niveau de 315 Hz, 0 dB (160 pWb/mm) de la bande d'essai (MTT-256).

d) **Niveau d'entrée normal**: Le niveau d'entrée normal nécessaire pour obtenir le niveau d'enregistrement normal. Les niveaux aux jacks d'entrée respectifs sont indiqués ci-dessous.
MICROPHONE ..... −50 dBs (0 VU)
ENTREE DE LIGNE ..... −20 dBs (0 VU) KX-77C
−24 dBs (0 VU) KX-55C/5XC

e) **Niveau de sortie normal**: Le niveau de signal normal obtenu au jack de SORTIE DE LIGNE lorsque le signal au niveau de référence de 315 Hz est reproduit de la bande d'essai.
MTT-256 315 Hz (160 pWb/mm)
Niveau de sortie: −9 dBs

Remarque:
La marque DOLBY et le double "D" sont des marques déposées des Dolby Laboratories.
Le système de réduction du bruit de fond est fabriqué sous license des Dolby Laboratories.

SPECIFICATIONS DE LA BANDE

MODELE	TITRE	CONSTANTE DE TEMPS	DESCRIPTION		APPLICATION
			FREQ./NIVEAU	PROGRAMME	
MTT-111	FLUTTER	–	3 kHz −10 dB	10 dB 3 kHz 30 Min. (Thickness 18 μm)	Vitesse de défilement Pleurage et scintillement
MTT-256	FREQUENCY	3180 μs et 120 μs	315 Hz ~ 14 kHz 0 dB/−20 dB 0 dB = Niveau de référence DIN −4 dB	315 10k 31.5 63 250 1k 4k 8k 12.5k 0 dB 20 dB 6.3k 315 40 125 500 2k 6.3k 10k 14k 30 30 30 10	Réponse en fréquence Azimut

www.hifiengine.com

REGLAGES

Nº	ITEM	REGLAGE DE L'ENTREE	REGLAGE DE LA SORTIE	REGLAGE DU MAGNETOPHONE A CASSETTE	POINTS L'ALIGNMENT	ALIGNER POUR	FIG.
SECTION DU MAGNETOPHONE				TAPE SELECTEUR DE TYPE DE BAND: NORMAL			
TETE DE ENREGISTREMENT/LECTURE							
[1]	**DEMAGNETISATION**	–	–	POWER: OFF Élogner la porte.	Tête de ENREGISTREMENT/ LECTURE.	Demagnittiser la tête de ENREGISTREMENT/ LECTURE avec un démagnétiseur de tête.	
[2]	**NETTOYAGE**	–	–	PLAY	Tête de ENREGISTREMENT/ LECTURE. Tête de effacement, cabestan, Galet-presseur.	Nettoyer la tête de ENREGISTREMENT/LECTURE, la tête déffacement, le cabestan et le galetpresseur avec un coton-tige légèrement imbibé alcool.	
[3]	**AZIMUT**	MTT-256 10 kHz –20 dB	(A)	PLAY	Vis d'azimut	Régler la vis d'azimut en sorte que les deux niveaux de sortie de canal soient au maximum, puis bloquer la vis avec l'adhésif.	(a)
MOTEUR CC							
(i)	**VITESSE DE DEFILEMENT**	MTT-111	(A)	PLAY	Résistance adjustable du moteur CC (pour entraînement du cabestan)	Fréquence: 3000 Hz	(b)
PLAQUE IMPRIMEE (X28-1470-10)							
(1)	**NIVEAU DE LECTURE**	MTT-256 315 Hz 0 dB	(A)	PLAY	VR3(G) VR4(D)	Niveau de sortie: –9 dBs	
(2)	**NEVEAU D'ENREGISTREMENT**	AC-223 (C) 1 kHz –10 dBs	(A)	Enregistrement → Lecture	VR5(G) VR6(D)	Régler le potentiomètre LINE REC LEVEL de façon á obtenir une LINE OUT de –9 dBs. Après l'enregistrement faire la lecture et vérifier que la LINE OUT soit comprise entre –9 dBs.	
(3)	**COURANT DE POLARISATION**	(C) 1 kHz, –30 dBs 10 kHz, –30 dBs	(A)	Enregister alternativement les signaux de 1 kHz et 10 kHz, puis faire la lecture.	VR9(G) VR10(D)	Régler VR9 (VR10) en sorte que le niveau de sortie de lecture de 10 kHz égale celui de 1 kHz.	
(4)	**INDICATEUR DE NIVEAU DE CRETE A DIODE LED**	(C) 1 kHz –10 dBs	(A)	REC PAUSE	VR7(G) VR8(D)	Réguler LINE REC LEVEL de façon qu'on puisse obtenir LINE OUT de–9 dBs. Ajuster VR7 (VR8) de façon que le segment de diode LED 0 dB soit complètement allumé.	

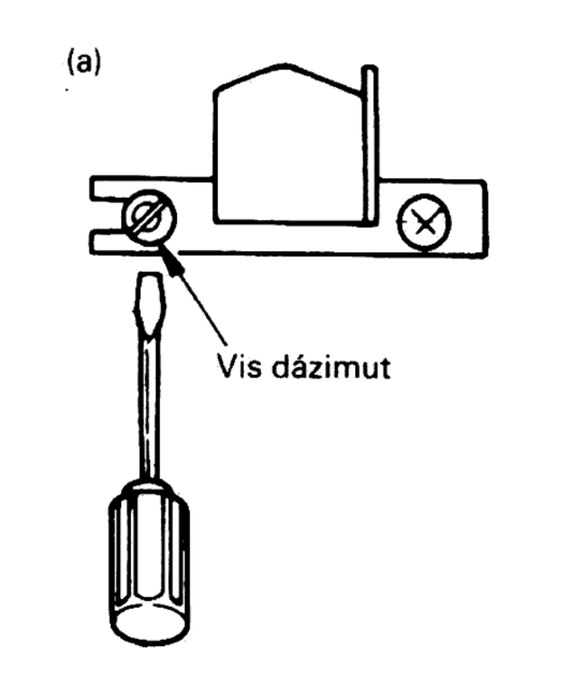

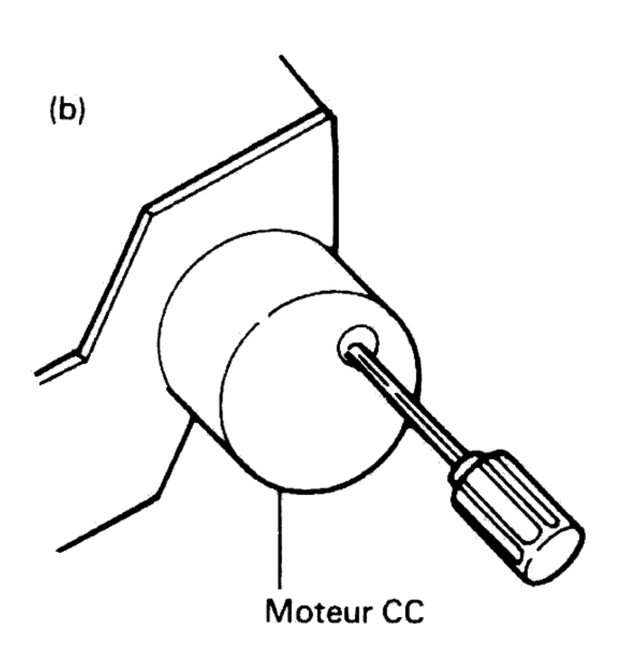

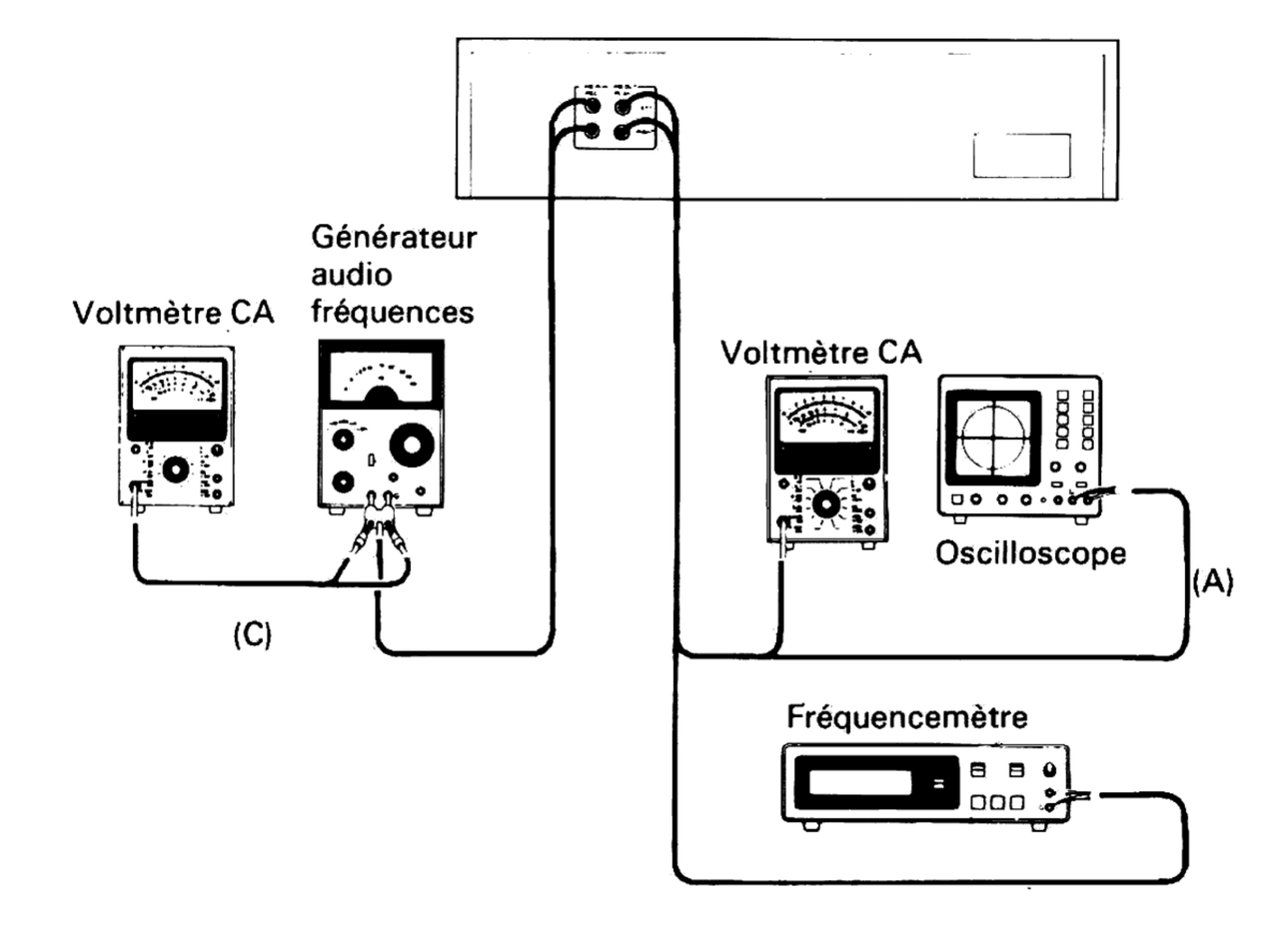

www.hifiengine.com

ABGLEICH

1 Hinweise für Abgleich

a) **Belastungswiderstand**: Eine ,reine Widerstandsbelastung von 100 kΩ an die LINIENAUSGANGS-Klemme anschließen!

b) **Standardpegel**: 0 dBs = 0,775 Volt

c) Das elektrische System durch seine Einteilung in Wiedergabe und Aufnahme einstellen.
Die Einstellung der Aufnahme setzt eine perfekte Leistung des Wiedergabesystems voraus.
Keine speziellen Einstellungen sollten nötig sein, ausser wenn innere Komponenten ausgewechselt werden.

d) Beim Auswechseln des Kopfes muß sein Streumagnetismus völlig mit einem Entmagnetisierer vor dem Einlegen des Bandes gelöscht werden.

e) Ausser wenn anders vorgeschrieben, die Messung mit dem Dolby NR Schalter in der Aus-Stellung durchführen.

2 Meß-und Prüfgeräte, Werkzeuge und Einspannvorrichtungen

- Wechselspannungsmesser (Hohe Eingangsimpedanz)
- NF-Signalgenerator
- Oszilloskop
- Frequenzzähler
- Gleichlauf- Schwankungsmesser
- Ohrkurven-Bewertungsfilter (ASA "A" mit NAB-Kurve)
- Bandpaßfilter (Mittelfrequenz: 125 Hz, 1 kHz Schwächung: 18 dB/Okt. oder mehr)
- Kassetten-Drehmomentmesser (TW-2111: T99-0208-00) (od. Bandzugmesser)
- Federwaage
- Drehmomentskala
- Tonkopf-Entmagnetisierungsdrossel
- Reinigungsband (T93-0014-05)
- Spiegelband (T93-0021-00)

3 Bezugsbänder

a) Bezugsbänder für Abgleich von Aufnahmeteil
Normalband: TDK AC-223 (T93-0022-05) oder KENWOOD ND
CrO_2 Band: TDK AC-512 (T93-0019-05) oder KENWOOD CD
Reineisenband: TDK AC-711 (T93-0020-05) oder KENWOOD MD

b) Bezugsbänder für Abgleich von Ablesungsteil Bandgeschwindigkeit und Gleichlaufshwankungen:
TEAC MTT-111 (T93-0015-00)
Frequenzgang und Kopfazimth:
TEAC MTT-256 (T93-0025-00)

4 Bedutung der Technischen Wörter

a) **Standardwiedergabezustand**: Der Zustand, der durch die Wiedergabe des Signals mit dem Bezugspegel von 315 Hz (160 pWb/mm) des Testbandes und durch die Einstellung des Wiedergabëpegel erreicht wird und zwar so, daß der Standardausgangspegel (−9 dBs = 0.27V) an der LINIENAUSGANGS-Klemme erreicht werden kann.

b) **Standardaufnahmezustand**: Der Zustand, der durch das Anbringen des 1 kHz Signals an die LINIENEINGANGS-Klemme mit dem Normaleingangspegel (−10 dBs) und durch Einstellung des AUFNAHMEPEGEL-Reglers erreicht wird und zwar so, daß die Aufnahme bei normalem Aufnahmepegel durchgeführt werden kann.

c) **Standardaufnahmepegel**: Ein Pegel um den Restmagnetfluß von 160 pWb/mm auf dem Standardaufnahmeband zu erreichen, der 9 dB unter dem 315 Hz, 0 dB (160 pWb/mm) Pegel des Testbandes liegt (MTT-256).

d) **Standardeingangspegel**: Der Standardeingangspegel, der benötigt wird um den normalen Aufnahmepegel zu erreichen. Die Pegel an den respektiven Klemmen sind hier unten angegeben.
MIKROFON ..... −50 dBs (0 VU)
LINIENEINGANGS..... −20 dBs (0 VU) KX-77C
−24 dBs (0 VU) KX-55C/5XC

e) **Standardausgangspegel**: Der Standardsignalpegel, der an der LINIENAUSGANGS-Klemme erreicht wird, wenn das Signal mit dem Bezugspegel von 315 Hz vom Testband wiedergegeben wird.
MTT-256 315 Hz (160 pWb/mm)
Ausgangspegel: −9 dBs

Hinweis:
DOLBY und Doppel-D-Symbol sind eingetragene Warenzeichen der Dolby Laboratories. Dolby-Rauschunterdrückung mit Lizenz der Dolby Laboratories gefertigt.

TECHNISCHE DATEN DER BEZUGSBÄNDER

TYP	BEZEICHNUNG	ZEITKONSTANTE	BESCHREIBUNG		ANWENDUNG
			FREQ/PEGEL	PROGRAM	
MTT-111	Gleichlaufschwankungen (FLUTTER)	—	3 kHz −10 dB	10 dB 3 kHz (Thickness 18 μm) 30 Min.	Bandlaufgeschwindigkeits-Prüfung Gleichlaufschwankungs-Prufung
MTT-256	Frequenzgang (FREQUENCY)	3180 μSek. und 120 μSek.	315 Hz ~ 14 kHz 0 dB/−20 dB 0 dB = DIN-Bezugspegel −4 dB	0 dB 20 dB 315 10k 31.5 63 250 1k 4k 8k 12.5k 6.3k 315 40 125 500 2k 6.3k 10k 14k 30 30 30 10	Prüfung des Frequenzgangs

www.hifiengine.com

ABGLEICH

NR.	GEGENSTAND	EINGANGS-EINSTELLUNG	AUSGANGS-EINSTELLUNG	KASSETTEN-GERÄT-EINSTELLUNG	ABGLEICH-PUNKTE	ABGLEICHEN FÜR	ABB.
CASSETTEN-DECK-ABTEILUNG				TAPE BANDSORTENWÄHLER: NORMAL			
AUFNAHME/WIEDERGABE-KOPF							
[1]	**ENTMAGNETI-SIERUNG**	–	–	POWER: OFF Den Kassettenfach deckel oben herausziehen.	AUFNAHME/ WIEDERGABE-Kopf	Entmagnetisierung von dem AUFNAHME/WIEDERGABE-Kopf mit einem Tonkopf Entmagnetisierungsdrossel.	
[2]	**REINIGUNG**	–	–	PLAY	AUFNAHME/ WIEDERGABE-Kopf, Löschkopf, Tonwelle, Andruckrolle	AUFNAHME/WIEDERGABE-Kopf, Löschkopf, Tonwelle und Andruckrolle mit einem leicht mit Alkohol befeuchteten Wattebausch reinigen.	
[3]	**AZIMUTH-EINSTELLUNG**	MTT-256 10 kHz –20 dB	(A)	PLAY	Azimuth-Einstellschraube	Einstellung von Azimuth Einstellschraube so daß beide Kanal Ausgangspegel maximal sind, dann die Schraube mit Klebstoff festlegen.	(a)
GLEICHSTROMMOTOR							
(i)	**BANDGESCH-WINDIGKEIT**	MTT-111	(A)	PLAY	Trimmer potentiometer am Gleichstrommotor (für Tonwellenantreibe)	Frequenz: 3000 Hz	(b)
GEDRUCKTE SCHALTPLATTE (X28-1470-10)							
(1)	**WIEDERGABE-PEGEL**	MTT-256 315 Hz 0 dB	(A)	PLAY	VR3(L) VR4(R)	Ausgangspegel: –9 dBs	
(2)	**AUFNAHME-PEGEL**	AC-223 (C) 1 kHz –10 dBs	(A)	Aufnahme → Wiedergabe	VR5(L) VR6(R)	Stellen Sie LINE REC LEVEL so ein, daß man bei LINE OUT einen Ausgang von –9 dBs erhält. Darauf Aufnahme, Wiedergabe und stellen Sie sicher, daß der Ausgang von LINE OUT –9 dBs liegt. Wenn dieser Pegel nicht erreicht ist, nachstellen Sie VR5 (VR6) ein.	
(3)		(C) 1 kHz, –30 dBs 10 kHz, –30 dBs	(A)	Aufnehmen das Signal von 1 kHz und 10 kHz abwechselnd und vorlesung	VR9(L) VR10(R)	Abgleich von VR9 (VR10) so daß der Abspiel-Ausgangspegel von 10 kHz dem von 1 kHz gleich ist.	
(4)	**LED-SPITZEN-PEGELMESSER**	(C) 1 kHz –10 dBs	(A)	REC PAUSE	VR7(L) VR8(R)	Stellen Sie LINE REC LEVEL so ein, daß man bei LINE OUT einen Ausgang von –9 dBs erhält. Stellen Sie VR7 (VR8) so ein, daß das 0 dB-Segment vollständig leuchtet.	

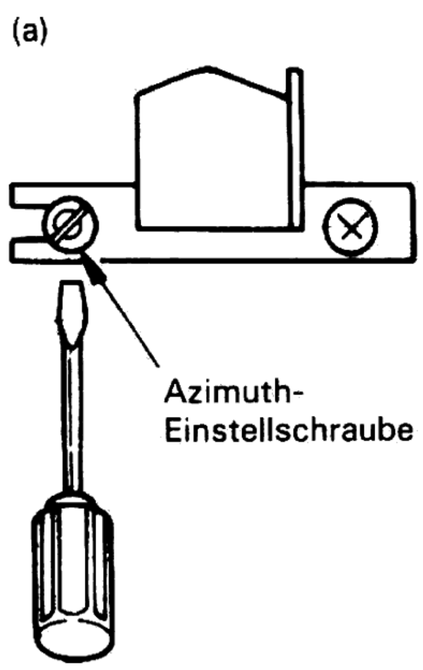

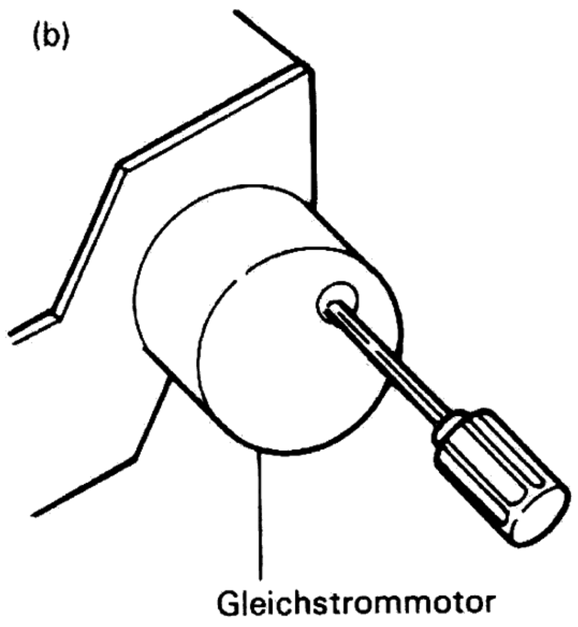

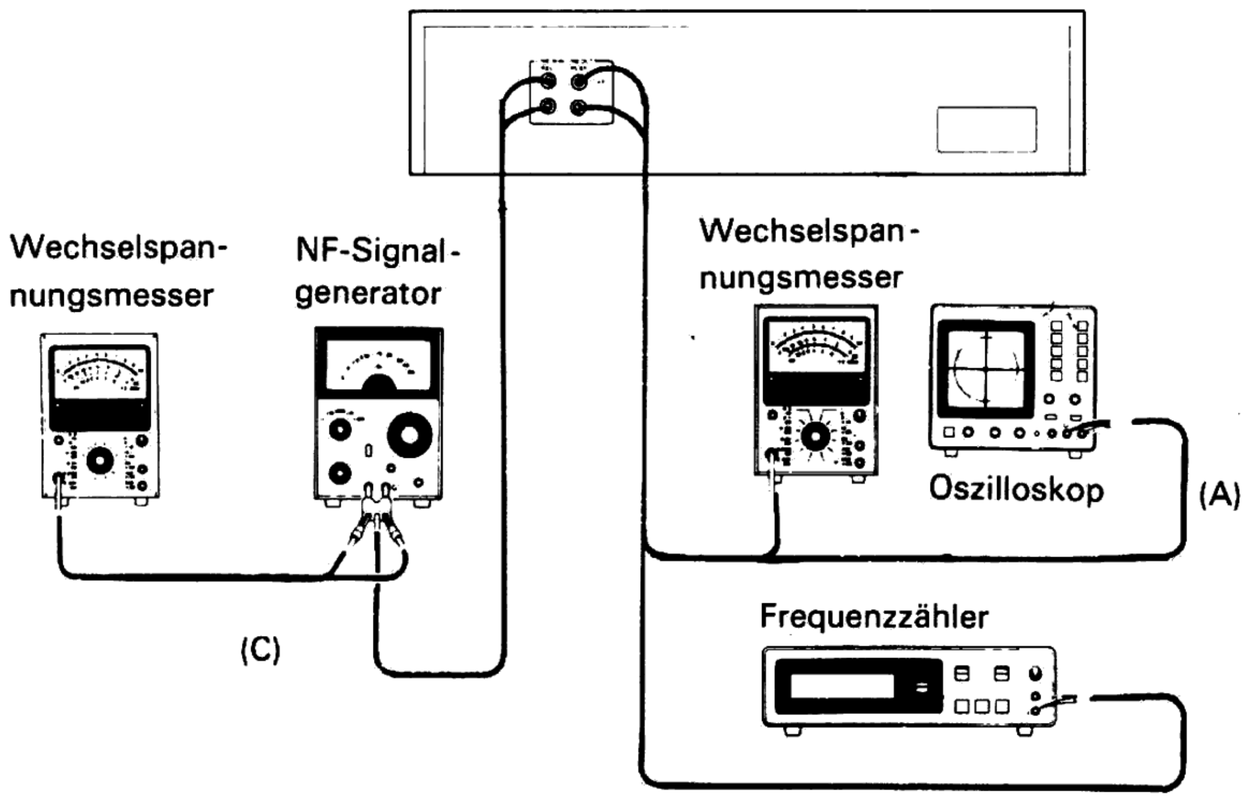

www.hifiengine.com

PC BOARD

CONTROL
(X29-1330-00)
Component side view

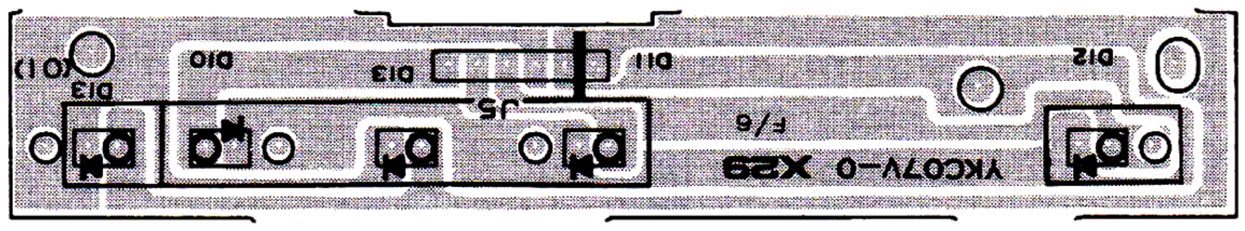

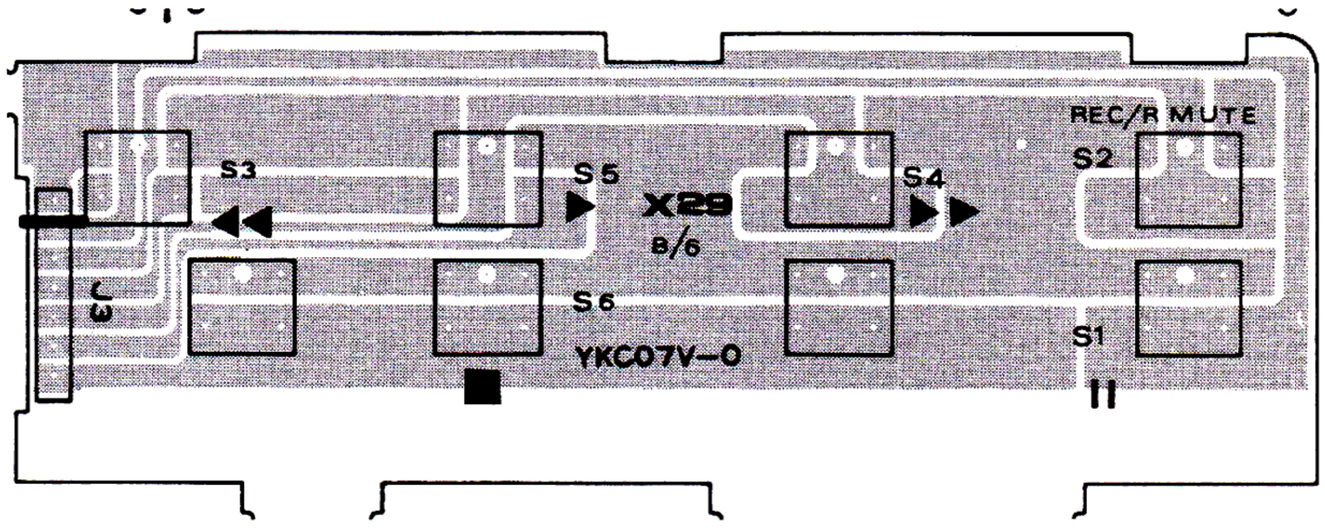

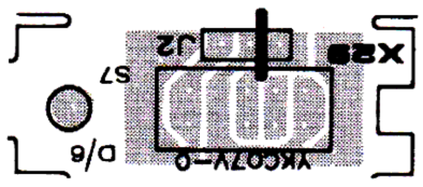

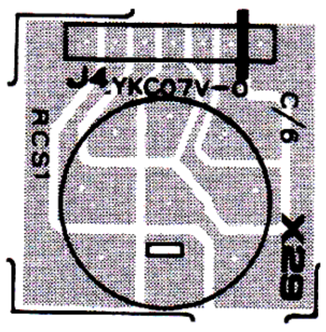

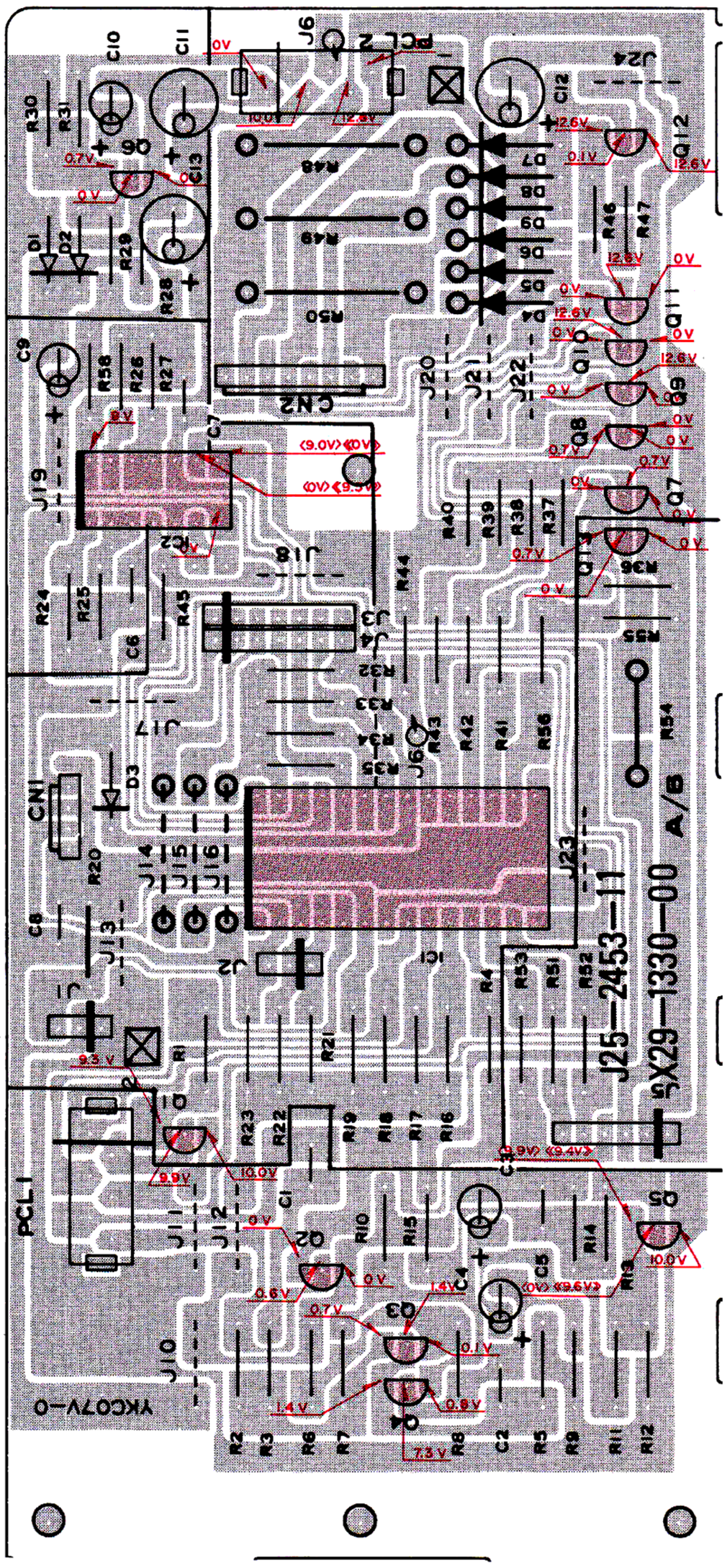

PHOTO INTERRUPTER
Foil side view

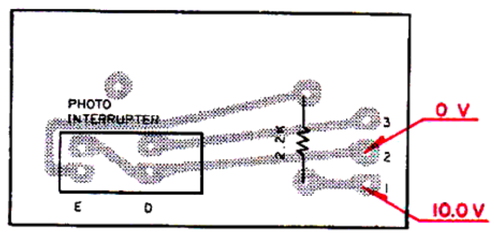

Refer to the schematic diagram for the values of capacitors and resistors. The PC board drawing is viewed from the side easy to check.

In this model, there are separated pc boards which were originally one. These separated pc boards can't be supplied independently.

Ex.

Part No. of pc board	Separated portion No.
X09-1230-00	(A/3)
X09-1230-00	(B/3)
X09-1230-00	(C/3)

In the example shown above, separated portion can't be ordered independently. In case only A/3 was ordered, pc board ass'y of X09-1230-00, which all A/3, B/3, C/3 included, will be shipped.

www.hifiengine.com

PC BOARD

REC/PLAY
(X28-1470-10)
Component side view

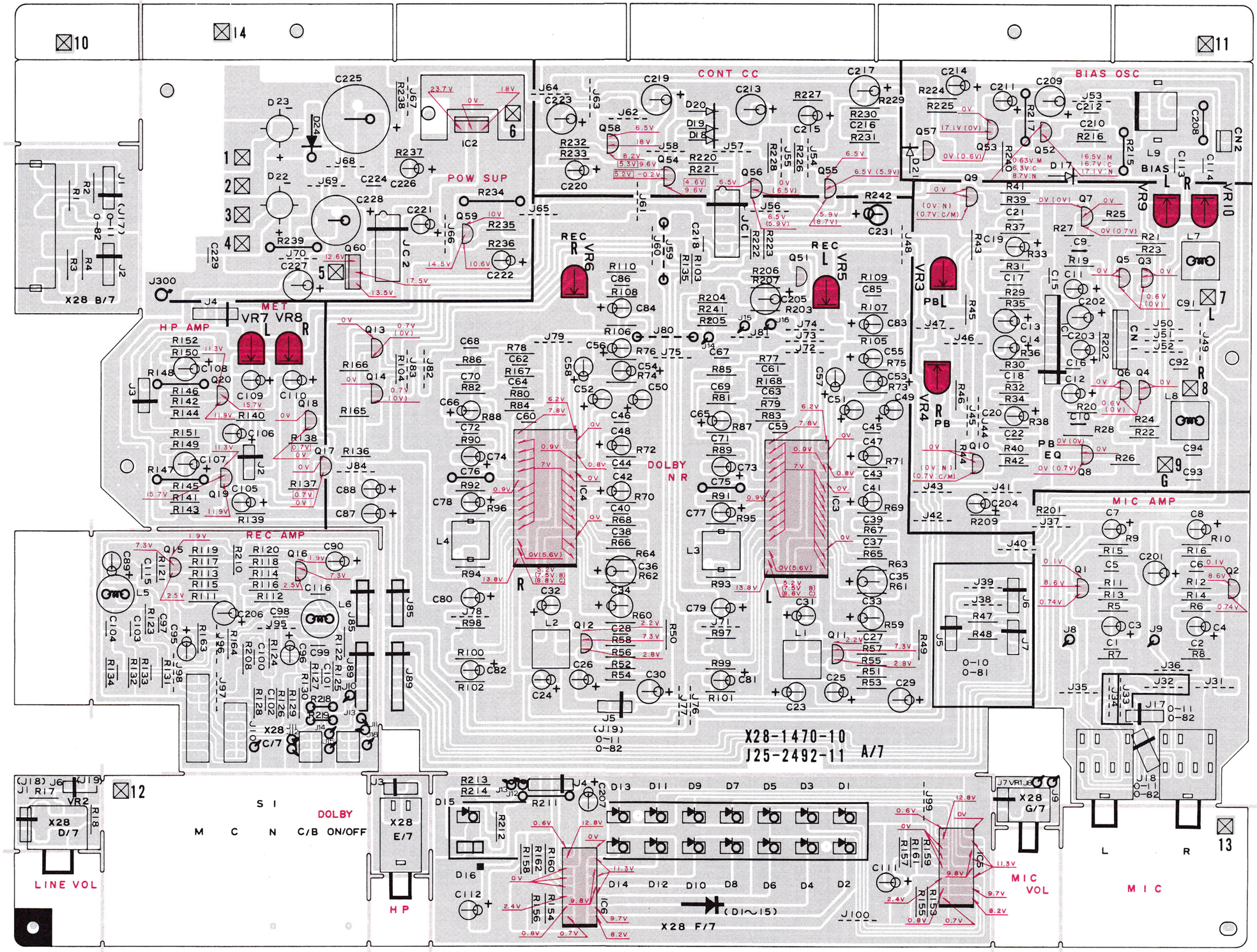

B: DOLBY B POSITION
C: DOLBY C POSITION
N: NORMAL POSITION
C: CHROME POSITION
M: METAL POSITION

In this model, there are separated pc boards which were originally one. These separated pc boards can't be supplied independently.

Ex.

Part No. of pc board	Separated portion No.
X09-1230-00	(A/3)
X09-1230-00	(B/3)
X09-1230-00	(C/3)

In the example shown above, separated portion can't be ordered independently. In case only A/3 was ordered, pc board ass'y of X09-1230-00, which all A/3, B/3, C/3 included, will be shipped.

Refer to the schematic diagram for the values of capacitors and resistors. The PC board drawing is viewed from the side easy to check.

KENWOOD

STEREO CASSETTE DECK

KX-77C

SPECIFICATIONS (KX-55C/77C)

Type	Front Loading Stereo Cassette Deck with Dolby B C NR System
Track System	4-Track, 2-Channel Stereo/Mono, Recording/Playback
Recording System	AC Bias System (Bias Frequency: 105 kHz)
Erasing System	AC System
Tape Speed	4.76 cm/sec (1-7/8 ips)
Heads	Record and Playback Head × 1 (Amorphous Alloy) Erase Head × 1 (Double Gap Ferrite)
Motor	Electronically Controlled DC Single Motor
Fast Winding Time	Approx. 100 seconds with C-60 tape
Frequency Response:	
Normal Tape	20 Hz to 16,000 Hz (30 Hz to 15,000 Hz, ± 3 dB)
CrO_2 Tape	20 Hz to 17,000 Hz (30 Hz to 16,000 Hz, ± 3 dB)
Metal Tape	20 Hz to 17,000 Hz (30 Hz to 16,000 Hz, ± 3 dB)
Signal-to-Noise Ratio:	
Dolby C NR ON	72 dB (Metal Tape)
Dolby B NR ON	65 dB (Metal Tape)
Dolby NR OFF	57 dB (Metal Tape)
Harmonic Distortion	Less than 1.0% (at 1 kHz, 0 VU with Metal Tape)
Wow and Flutter	0.04% (W.R.M.S.)
Input Sensitivity/Impedance:	
LINE × 2	77.5 mV/50 kohms (KX-77C) 49 mV/50 kohms (KX-55C)
Microphones × 2	2.5 mV/3.3 kohms
Output Level/Load Impedance:	
LINE × 2	270 mV/100 kohms
Headphones × 1	35 mV/8 ohms
Built-in Features	Direct Program Search System by Micro-Computer Dolby B C Noise Reduction System Three Position Tape Selectors (Normal/CrO_2/Metal) Peak Level Meters Full-Auto Shut Off Mechanism in All Modes REC/REC PAUSE Indicator (KX-77C only) DPSS Indicators (◁◁, ▷▷, ▷) (KX-77C only) DPSS OPERATION indicator (▭) (KX-55C only) Timer Stand by Mechanism Two Microphone Jacks, Headphone Jack
Power Requirements	AC 120V, 60 Hz: U.S.A. and Canada Models AC 120V/220-240V (Switchable), 50/60 Hz: Other Countries
Power Consumption	18 watts
Dimensions	KX-77C W: 440 mm (17-5/16") H: 120 mm (4-23/32") D: 275 mm (10-13/16") KX-55C W: 440 mm (17-5/16") H: 120 mm (4-23/32") D: 235 mm (9-4/16")
Weight	KX-77C: 4.7 kg (10.3 lb), KX-55C: 4.2 kg (9.2 lb)
Supplied Accessories	Audio Connection Cable × 2 Head Cleaning Set × 1
Reference Tapes	Normal: KENWOOD ND-60 CrO_2: KENWOOD CD-60 Metal: KENWOOD MD-60

Kenwood follows a policy of continuous advancements in development. For this reason specifications may be changed without notice.
DOLBY and the double-D symbol are trademarks of Dolby Laboratories Licensing Corporation.
Noise reduction circuit made under license from Dolby Laboratories Licensing Corporation.

Kenwood poursuit une politique de progrès constants en ce qui concerne le développement. Pour cette raison, les spécifications sont sujettes à modifications sans préavis.
La marque DOLBY et le double "D" sont des marques déposées des Dolby Laboratories.
Le système de réduction du bruit de fond est fabriqué sous license des Dolby Laboratories.

Kenwood strebt ständige Verbesserungen in der Entwicklung an. Daher bleiben Änderungen der technischen Daten jederzeit vorbehalten.
DOLBY und Doppel-D-Symbol sind eingetragene Warenzeichen der Dolby Laboratories. Dolby-Rauschunterdrückung mit Lizenz der Dolby Laboratories gefertigt.

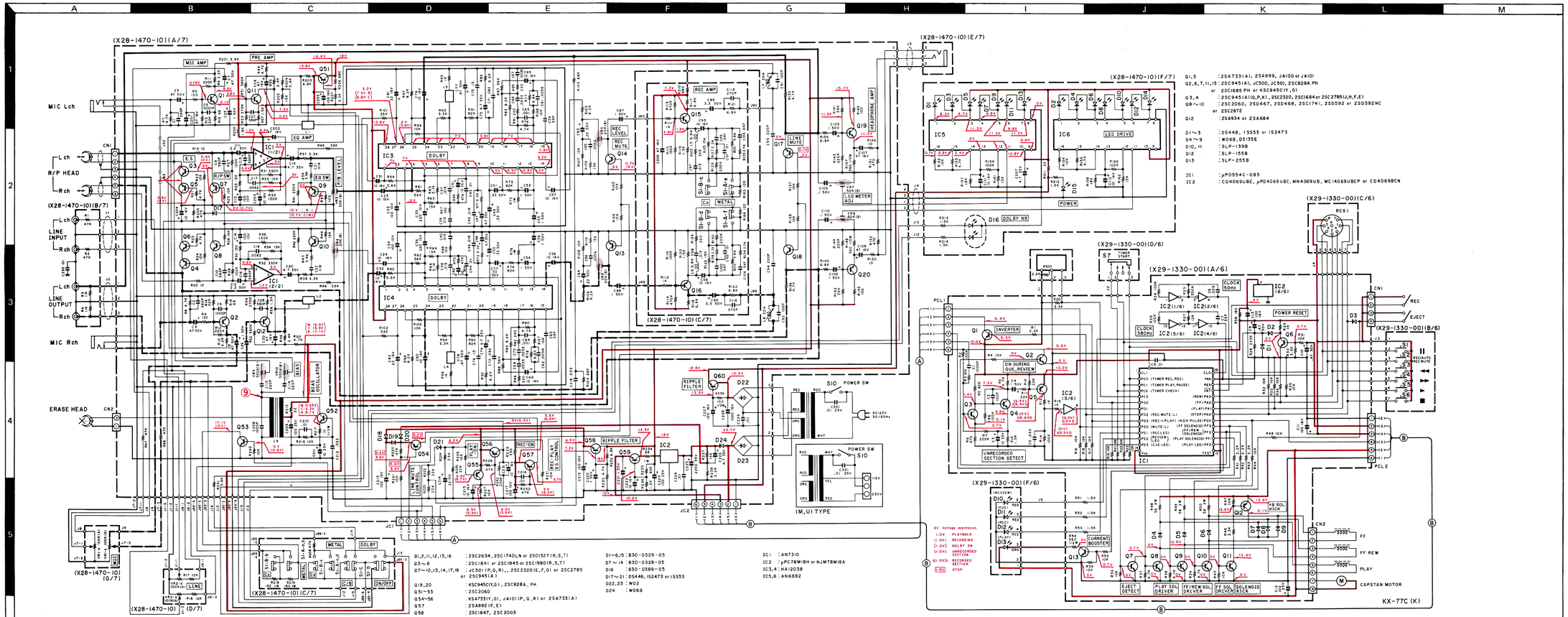

Q1,5 : 2SA733(A), 2SA999, JA100 or JA101
Q2,6,7,11,13 : 2SC945(A), JC500, JC501, 2SC828A,PH or 2SC1685 PH or KSC945C(Y, O)
Q3,4 : 2SC945(A10,P,K), 2SC2320, 2SC1684 or 2SC2785(J,H,F,E)
Q8~10 : 2SC2060, 2SD467, 2SD468, 2SC1741, 2SD592 or 2SD592NC or 2SC2872
Q12 : 2SA934 or 2SA684
D1~3 : DS448, IS553 or IS2473
D4~9 : WO68, DS135E
D10, 11 : SLP-139B
D12 : SLP-155B
D13 : SLP-255B
IC1 : μPD554C-085
IC2 : CD4069UBE, μPD4069UBC, MN4069UB, MC14069UBCP or CD4069BCN

DC Voltage explanation
1.0V PLAYBACK
(1.0V) RECORDING
(1.0V) DOLBY ON
(1.0V) UNRECORDED SECTION
(0.0V) RECORDED SECTION
0.0V STOP

Q1,2,11,12,15,16 : 2SC2634, 2SC1740LN or 2SC1327(R,S,T)
Q3~6 : 2SC1841 or 2SC1845 or 2SC1980(R,S,T)
Q7~10,13,14,17,18 : JC501(P,Q,R1,, 2SC2320(E,F,G) or 2SC2785 or 2SC945(A)
Q19,20 : KSC945C(Y,G), 2SC828A, PH
Q51~53 : 2SC2060
Q54~56 : KSA733(Y,O), JA101(P,Q,R) or 2SA733(A)
Q57 : 2SA992(F,E)
Q58 : 2SC1847, 2SC2003
Q59 : 2SC2060 or 2SC2872
Q60 : 2SD330

D1~6,15 : B30-0329-05
D7~14 : B30-0328-05
D16 : B30-0389-05
D17~21 : DS448, IS2473 or IS553
D22,23 : WO2
D24 : WO68

IC1 : AN7310
IC2 : μPC78M18H or NJM78M18A
IC3,4 : HA12038
IC5,6 : AN6882

① Base of Q3
0.5V/div, 0.2 ms/div

② Collector of Q3
1V/div, 0.2 ms/div

③ Collector of Q4
5V/div, 0.2 ms/div

④ Junction of C4 and R11
5V/div, 0.2 ms/div

⑤ Base of Q5
0.5V/div, 0.2 ms/div

⑥ Collector of Q5
5V/div, 0.2 ms/div

⑦ IC1-28
5V/div, 2 μs/div

⑧ IC1-25
5V/div, 0.02 μs/div

⑨ TAPE SELECTOR: NORMAL
20V/div, 10 μs/div

⑨ TAPE SELECTOR: CrO_2
20V/div, 10 μs/div

⑨ TAPE SELECTOR: METAL
20V/div, 10 μs/div

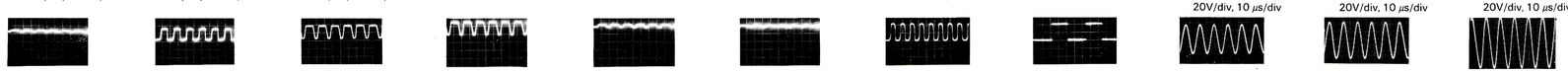

2SA684
2SA733(A)
2SA934
2SA992
2SA999
2SC828APH

2SC945(A)
2SC1327
2SC1684
2SC1685PH
2SC1847
2SC1740LN

2SC1841
2SC1845
2SC1980
2SC2003
2SC2060
2SC2320
2SC2634

2SC2872
2SD592NC
JA100
JA101
JC500
JC501

KSA733
KSC945C

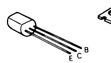

2SD330

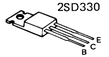

2SC2785

μPC78M18H
NJM78M18A

AN7310

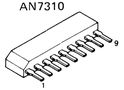

CD4069UBE
MN4069UB
MC14069UBCP

μPD4069C

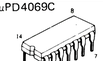

HA12038

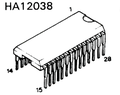

μPD554C-085

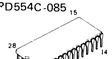

AN6882

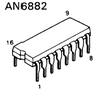

- DC voltages are measured by a VOM of 20 kΩ/V input impedance.
- Les tensions de courant continu sont measurées par un multimètre d'une impédance d'entrée de 20 kΩ/V.
- Die Gleichstrom-Spannungen werden durch ein Vielfachmeßgerät von 20 kΩ/V Eingangs-Impedanz gemessen.

KENWOOD

STEREO CASSETTE DECK

KX-55C/5XC

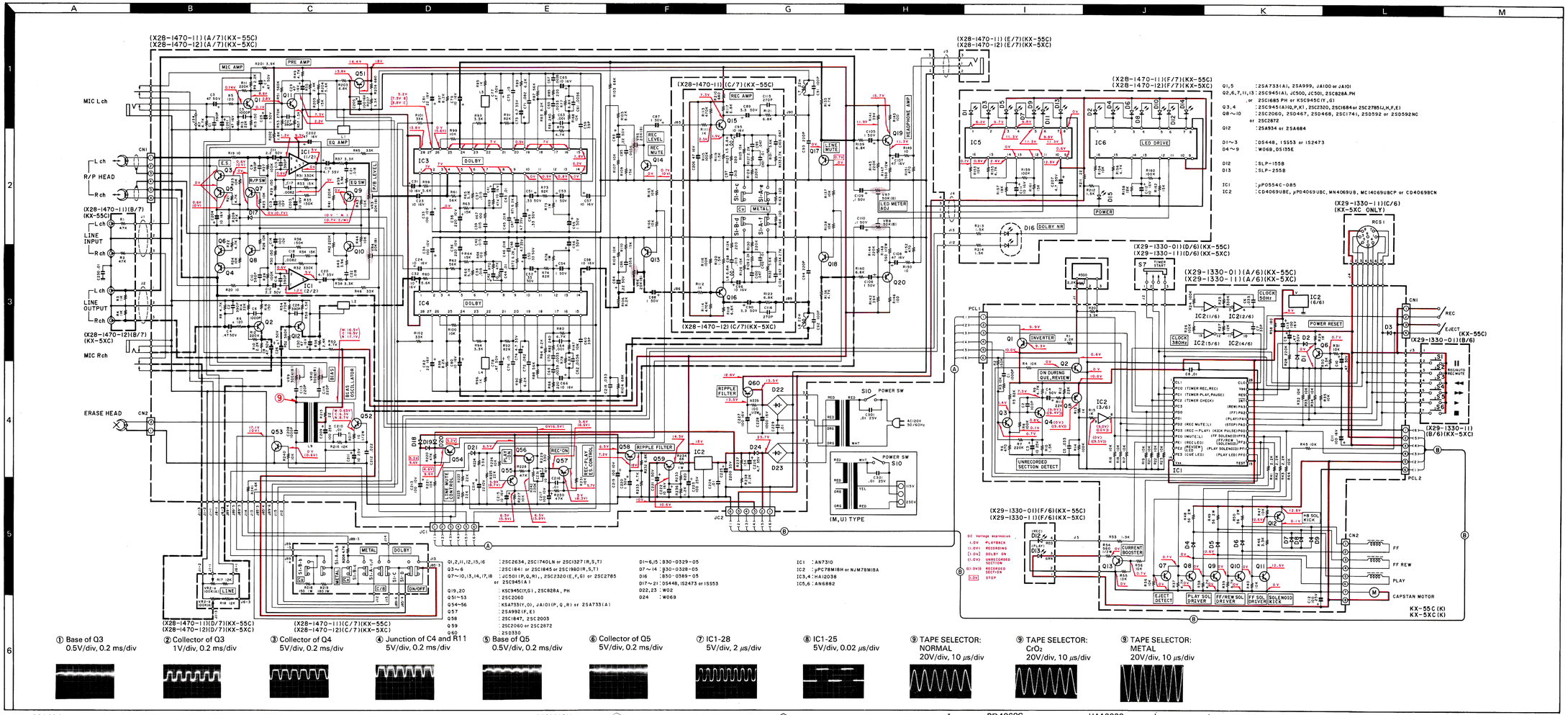

Q1,5 : 2SA733(A), 2SA999, JA100 or JA101
Q2,6,7,11,13 : 2SC945(A), JC500, JC501, 2SC828A,PH or 2SC1685 PH or KSC945C(Y,G)
Q3,4 : 2SC945(A)(G,P,K), 2SC2320, 2SC1684or 2SC2785(J,H,E,E)
Q8~10 : 2SC2060, 2SD467, 2SD468, 2SC1741, 2SD592 or 2SD592NC or 2SC2872
Q12 : 2SA934 or 2SA684
D1~3 : DS448, 1S553 or 1S2473
D4~9 : W06B, DS135E
D12 : SLP-155B
D13 : SLP-255B
IC1 : μPD554C-085
IC2 : CD4069UBE, μPD4069UBC, MN4069UB, MC14069UBCP or CD4069BCN

DC Voltage mapression
(.0V PLAYBACK
(1.0V) RECORDING
(1.0V) DOLBY ON
(1.5V) UNRECORDED SECTION
(0V.0V3) RECORDED SECTION
(.0V STOP

Q1,2,11,12,15,16 : 2SC2634, 2SC1740LN or 2SC1327(R,S,T)
Q3~6 : 2SC1684 or 2SC1845 or 2SC1980(R,S,T)
Q7~10,13,14,17,18 : JC501(P,Q,R), , 2SC2320(E,F,G) or 2SC2785 or 2SC945(A)
Q19,20 : KSC945C(Y,G), 2SC828A, PH
Q51~53 : 2SC2060
Q54~56 : KSA733(Y,G), JA101(P,Q,R) or 2SA733(A)
Q57 : 2SA992(F,E)
Q58 : 2SC1847, 2SC2003
Q59 : 2SC2060 or 2SC2872
Q60 : 2SD330

D1~6,15 : B30-0329-05
D7~14 : B30-0328-05
D16 : B30-0369-05
D17~21 : DS448, 1S2473 or 1S553
D22,23 : W02
D24 : W06B

IC1 : AN7310
IC2 : μPC78M18H or NJM78M18A
IC3,4 : HA12038
IC5,6 : AN6882

① Base of Q3 0.5V/div, 0.2 ms/div
② Collector of Q3 1V/div, 0.2 ms/div
③ Collector of Q4 5V/div, 0.2 ms/div
④ Junction of C4 and R11 5V/div, 0.2 ms/div
⑤ Base of Q5 0.5V/div, 0.2 ms/div
⑥ Collector of Q5 5V/div, 0.2 ms/div
⑦ IC1-28 5V/div, 2 μs/div
⑧ IC1-25 5V/div, 0.02 μs/div
⑨ TAPE SELECTOR: NORMAL 20V/div, 10 μs/div
⑨ TAPE SELECTOR: CrO₂ 20V/div, 10 μs/div
⑨ TAPE SELECTOR: METAL 20V/div, 10 μs/div

Photo is KX-5XC.

SPECIFICATIONS (KX-5XC)

Type	Front Loading Stereo Cassette Deck with Dolby NR System
Track System	4-Track, 2-Channel Stereo/Mono, Recording/Playback
Recording System	AC Bias System (Bias Frequency: 105 kHz)
Erasing System	AC system
Tape Speed	4.76 cm/sec (1-7/8 ips)
Heads	Record/Playback Head × 1 (Amorphous Alloy)
	Erase Head × 1 (Double Gap Ferrite)
Motor	Electronically Controlled DC Motor
Fast Winding Time	Approx. 100 seconds with C-60 tape
Frequency Response:	
Normal Tape	20 Hz to 16,000 Hz (30 Hz to 15,000 Hz: ±3 dB)
CrO₂ Tape	20 Hz to 17,000 Hz (30 Hz to 16,000 Hz: ±3 dB)
Metal Tape	20 Hz to 17,000 Hz (30 Hz to 16,000 Hz: ±3 dB)
Signal to Noise Ratio:	
Dolby C Type NR ON	72 dB (Metal Tape)
Dolby B Type NR ON	65 dB (Metal Tape)
Dolby NR OFF	57 dB (Metal Tape)
Harmonic Distortion	Less than 1.0% (at 1 kHz, 0 VU, 3rd. H.D. with Metal Tape)
Wow and Flutter	0.04% (W.R.M.S.)
Input Sensitivity/Impedance:	
LINE × 2	49 mV/50 kohms
Microphones × 2	2.45 mV/3.3 kohms
Output Level/Load Impedance:	
LINE × 2	270 mV/100 kohms
Headphones × 1	35 mV/8 ohms
Built-in Features	Direct Program Search System by Micro-Computer Dolby B and C Noise Reduction Systems Three Position Tape Selector (Normal/CrO₂/Metal) 7-LED Peak Level Meters (−20 dB to +6 dB) Full Auto Shut-off Mechanism in all Models DPSS Operation and Rec/Rec Pause Indicators Auto Rec Mute Timer Stand-by Mechanism Two Microphone Jacks Headphone Jack Remote Control Jack
Power Requirements	AC 120V, 60 Hz: U.S.A. and Canada Models AC 120-V/220-240V (Switchable), 50/60 Hz: Other countries
Power Consumption	18.0 watts
Dimensions	W: 440 mm (17-5/16") H: 119 mm (4-11/16") D: 327 mm (12-7/8")
Weight	5.5 kg (12.13 lbs)
Supplied Accessories	Head Cleaning Set × 1, Audio Connection Cables × 2
Reference Tapes	Normal: KENWOOD ND-60 or TDK AD C-60 CrO₂: KENWOOD CD-60 or TDK SA C-60 Metal: KENWOOD MD-60 or TDK MA C-60

*KX-55C's specifications are printed on Page 9.

Kenwood follows a policy of continuous advancements in development. For this reason specifications may be changed without notice.
DOLBY and the double-D symbol are trademarks of Dolby Laboratories Licensing Corporation.
Noise reduction circuit made under license from Dolby Laboratories Licensing Corporation.

Kenwood poursuit une politique de progrès constants en ce qui concerne le développement. Pour cette raison, les spécifications sont sujettes à modifications sans préavis.
La marque DOLBY et le double "D" sont des marques déposées des Dolby Laboratories.
Le système de réduction du bruit de fond est fabriqué sous license des Dolby Laboratories.

Kenwood strebt ständige Verbesserungen in der Entwicklung an. Daher bleiben Änderungen der technischen Daten jederzeit vorbehalten.
DOLBY und Doppel-D-Symbol sind eingetragene Warenzeichen der Dolby Laboratories. Dolby-Rauschunterdrückung mit Lizenz der Dolby Laboratories gefertigt.

2SA684	2SC945(A)	2SC1841	2SC2872	KSA733	2SD330	2SC2785	μPC78M18H	AN7310	CD4069UBE	μPD4069C	HA12038
2SA733(A)	2SC1327	2SC1845	2SD592NC	KSC945C			NJM78M18A		MN4069UB		
2SA934	2SC1684	2SC1980	JA100						MC14069UBCP		
2SA992	2SC1685PH	2SC2003	JA101								
2SA999	2SC1847	2SC2060	JC500								
2SC828APH	2SC1740LN	2SC2320	JC501								
		2SC2634									

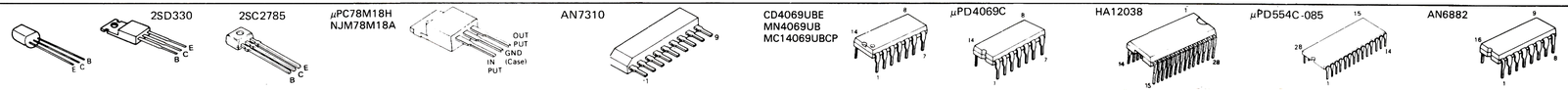

μPD554C-085 AN6882

- DC voltages are measured by a VOM of 20 kΩ/V input impedance.
- Les tensions de courant continu sont measurées par un multimètre d'une impédance d'entrée de 20 kΩ/V.
- Die Gleichstrom-Spannungen werden durch ein Vielfachmeßgerät von 20 kΩ/V Eingangs-Impedanz gemessen.

EXPLODED VIEW (KX-55C/77C)

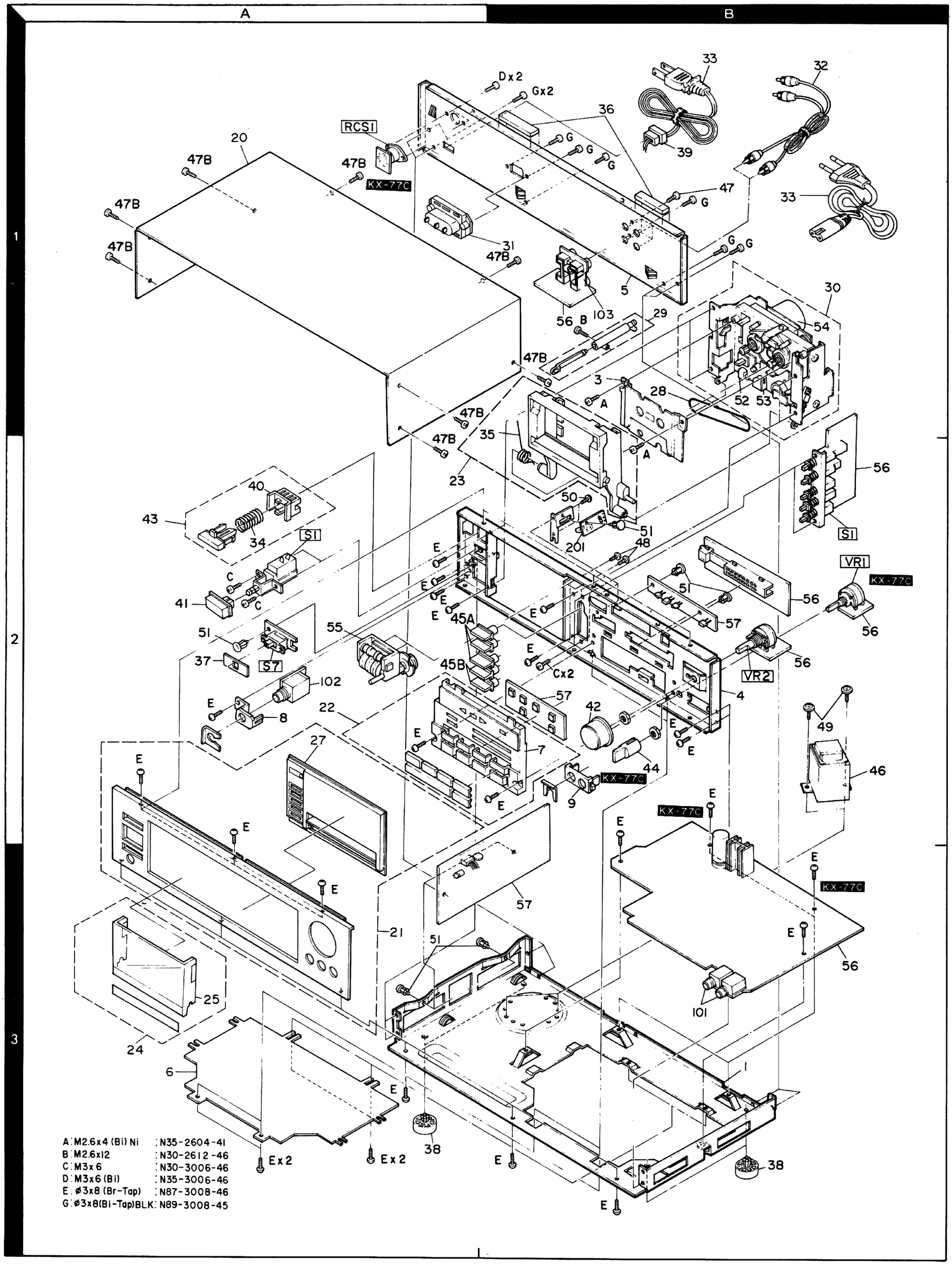

A	M2.6x4 (Bi) Ni	N35-2604-41
B	M2.6x12	N30-2612-46
C	M3x6	N30-3006-46
D	M3x6 (Bi)	N35-3006-46
E	ø3x8 (Br-Tap)	N87-3008-46
G	ø3x8(Bi-Tap)BLK	N89-3008-45

www.hifiengine.com

EXPLODED VIEW (KX-5XC)

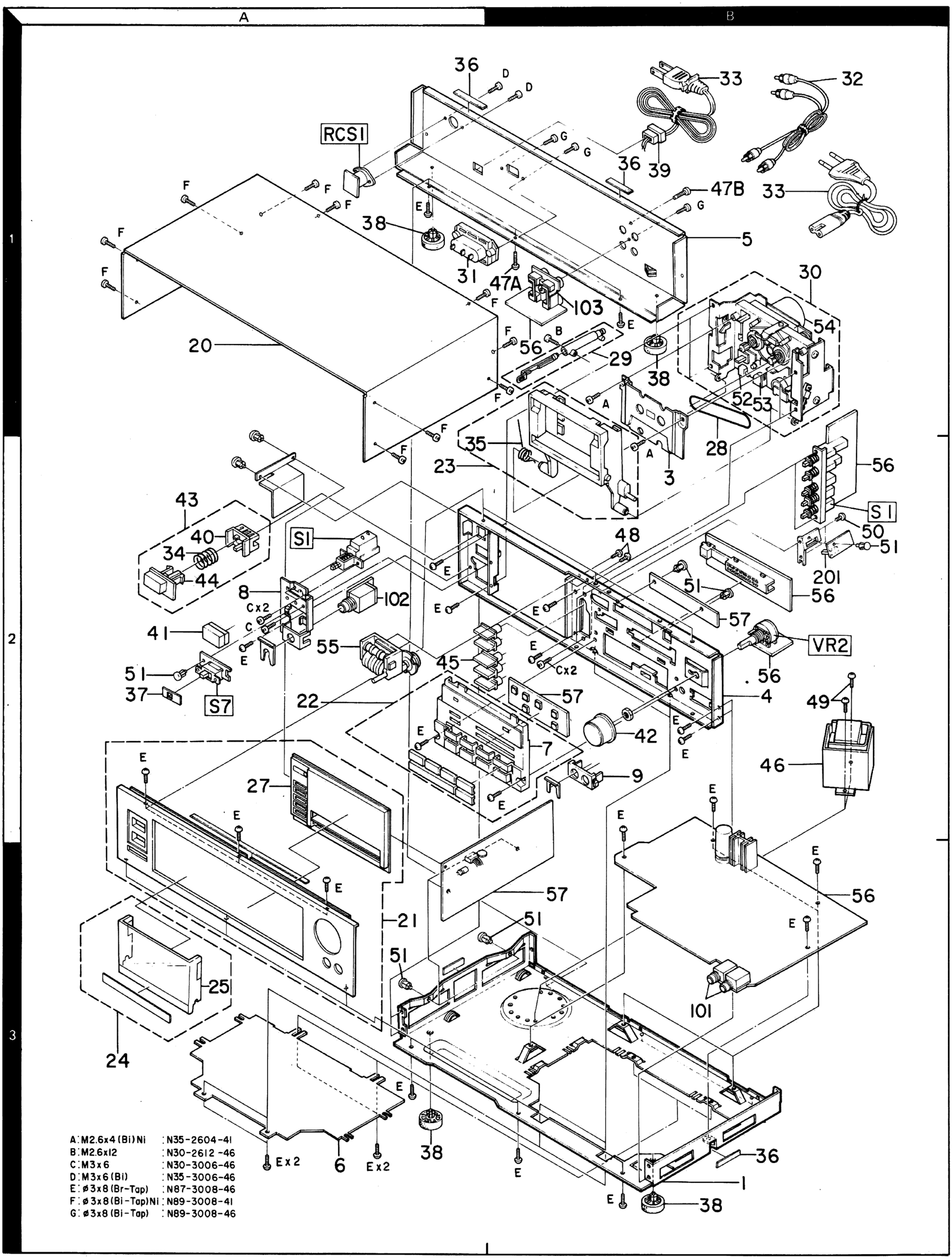

PARTS LIST

* New Parts
Parts without **Parts No.** are not supplied.
Les articles non mentionnés dans le **Parts No.** ne sont pas fournis.
Teile ohne **Parts No.** werden nicht geliefert.

Note: For detail parts of the mechanism ass'y, refer to KX-77 Service Manual.

Ref. No. 参照番号	Parts No. 部品番号	Description 部品名／規格	Remarks 備考
KX-77C			
1 3B	NO STOCK	MAIN CHASSIS	
3 1B	NO STOCK	DRESSING PANEL	
4 2B	NO STOCK	SUB PANEL	
5 1B	NO STOCK	REAR PANEL	
6 3A	NO STOCK	BOTTOM PLATE	
7 2B	NO STOCK	PANEL ESCUTCHEON	
8 2A	NO STOCK	MOUNTING HARDWARE(PHONE	
9 2B	NO STOCK	MOUNTING HARDWARE(MIC)	
20 1A	A01-0627-03	METALLIC CABINET	
21 3A	A20-2111-03	FRONT PANEL	*K
21 3A	A20-2111-03	FRONT PANEL	PU
21 3A	A20-2111-03	FRONT PANEL	MH
21 3A	A20-2111-03	FRONT PANEL	UE
21 3A	A20-2111-03	FRONT PANEL	X
21 3A	A20-2112-03	FRONT PANEL	*T
21 3A	A20-2113-03	FRONT PANEL	*E
22 2A	A21-0942-03	DRESSING PANEL ASSY	
23 2A	A53-0266-04	CASSETTE HOLDER ASSY	
24 3A	A53-0247-04	CASSETTE DOOR ASSY	
25 3A	A53-0248-04	CASSETTE DOOR	
-	B46-0055-30	WARRANTY CARD	P
-	B46-0060-00	WARRANTY CARD	T
-	B46-0061-30	WARRANTY CARD	K
-	B46-0062-30	WARRANTY CARD	UH
-	B46-0062-30	WARRANTY CARD	UE
-	B46-0063-13	WARRANTY CARD	UH
-	B46-0063-13	WARRANTY CARD	UE
-	B46-0064-20	WARRANTY CARD	X
-	B46-0078-03	WARRANTY CARD	E
-	B50-4450-00	INST MANUAL(ENG)	*K
-	B50-4450-00	INST MANUAL(ENG)	UH
-	B50-4450-00	INST MANUAL(ENG)	UE
-	B50-4451-00	INST MANUAL(ENG/FR)	*P
-	B50-4451-00	INST MANUAL(ENG/FR)	MX
-	B50-4452-00	INST MANUAL(SPANISH)	*M
-	B50-4453-00	INST MANUAL(4-LIGUAL)	*E
-	B50-4454-00	INST MANUAL(ENG)	*T
-	B59-0018-00	SERVICE STATIONS LIST	UH
-	B59-0018-00	SERVICE STATIONS LIST	UE
27 2A	B10-0541-03	FRONT GLASS ASSY	*
55 2A	B35-0218-15	COUNTER	
C1	C91-0079-05	CERAMIC 0.01UF AC125V	
28 2B	D16-0228-04	BELT	
29 1B	D39-0165-05	DAMPER ASSY	
30 1B	D40-0558-05	MECHANISM ASSY (Note)	*
31 1B	E03-0102-05	3P INLET	UM
31 1B	E03-0102-05	3P INLET	HT
31 1B	E03-0102-05	3P INLET	UE
31 1B	E03-0102-05	3P INLET	XE
32 1B	E30-0505-05	AUDIO CORD	
32 1B	E30-1353-05	AUDIO CORD	
33 1B	E30-1305-15	POWER CORD	UM
33 1B	E30-1305-15	POWER CORD	UE
33 1B	E30-1305-15	POWER CORD	H
33 1B	E30-1328-15	POWER CORD	T
33 1B	E30-1329-05	POWER CORD	E
33 1B	E30-1342-05	POWER CORD	X
33 1B	E30-1350-05	POWER CORD	KP

Ref. No. 参照番号	Parts No. 部品番号	Description 部品名／規格	Remarks 備考
34 2A	G01-1157-04	COIL SPRING	
35 2A	G01-1158-04	COIL SPRING	
36 1B	G13-0439-04	CUSHION	
37 2A	G16-0346-04	SHEET	
-	H01-4348-04	CARTON BOX	*T
-	H01-4349-04	CARTON BOX	*K
-	H01-4349-04	CARTON BOX	PU
-	H01-4349-04	CARTON BOX	MH
-	H01-4349-04	CARTON BOX	UE
-	H01-4349-04	CARTON BOX	XE
-	H10-2303-02	POLYSTYRENE FIXTURE	
-	H20-1107-04	COVER	KP
-	H20-1107-04	COVER	UX
-	H20-1107-04	COVER	UE
-	H20-1107-04	COVER	TE
-	H20-1109-04	COVER	M
-	H25-0078-04	BAG (235x315)	
38 3A,3B	J02-0343-05	FOOT	
39 1B	J42-0083-05	BUSHING	KP
40 2A	J42-0326-04	ESCUTCHEON	
41 2A	K27-0656-14	KNOB (POWER)	
42 2B	K29-0442-04	KNOB (REC LEVEL)	
43 2A	K29-0959-04	KNOB ASSY (EJECT)	
44 2B	K29-0960-04	KNOB (MIC)	
45A 2A	K29-0961-14	KNOB (PUSH)X3	
45B 2A	K29-1018-14	KNOB (DOLBY)X2	
46 2B	L01-6461-05	POWER TRANS	KP
46 2B	L01-6464-05	POWER TRANS	UM
46 2B	L01-6464-05	POWER TRANS	HX
46 2B	L01-6464-05	POWER TRANS	UE
46 2B	L01-6464-05	POWER TRANS	TE
47A 1B	N09-0292-05	SCREW	
47B 1A,1B	N09-0377-05	SCREW	
48 2B	N09-0979-05	SCREW	
49 2B	N09-0311-05	SCREW	UM
49 2B	N09-0311-05	SCREW	UE
49 2B	N09-0311-05	SCREW	HX
49 2B	N09-0311-05	SCREW	TE
49 2B	N09-0982-05	SCREW	KP
50 2B	N09-0810-04	SCREW	
51 2A,2B	N29-0216-05	FASTENER	
-	S46-1325-05	LEAF SWITCH (MECHANISM)	
S1	S40-1035-05	PUSH SWITCH (POWER)	KP
S1	S40-1037-05	PUSH SWITCH (POWER)	UM
S1	S40-1037-05	PUSH SWITCH (POWER)	HX
S1	S40-1037-05	PUSH SWITCH (POWER)	UE
S1	S40-1037-05	PUSH SWITCH (POWER)	TE
52 1B	T32-0010-05	ERASE HEAD	
53 1B	T34-0022-05	REC/PLAYBACK HEAD	
54 1B	T42-0108-05	MOTOR	
-	W01-0301-05	HEAD CLEANING BAR	
56 2B,3B	X28-1470-10	AMPLIFIER PC BOARD ASSY	*K
56 2B,3B	X28-1470-10	AMPLIFIER PC BOARD ASSY	P
56 2B,3B	X28-1470-81	AMPLIFIER PC BOARD ASSY	*U
56 2B,3B	X28-1470-81	AMPLIFIER PC BOARD ASSY	MH
56 2B,3B	X28-1470-81	AMPLIFIER PC BOARD ASSY	UE
56 2B,3B	X28-1470-81	AMPLIFIER PC BOARD ASSY	XT
56 2B,3B	X28-1470-81	AMPLIFIER PC BOARD ASSY	E
57 3B	X29-1330-00	CONTROL AMP PCB ASSY	

E: Scandinavia & Europe H: Audio Club K: USA P: Canada
S: South Africa T: England U: PX (Far East, Hawaii)
UE: AAFES (Europe) X: Australia M: Other Areas

www.hifiengine.com

PARTS LIST

* New Parts

Parts without **Parts No.** are not supplied.
Les articles non mentionnés dans le **Parts No.** ne sont pas fournis.
Teile ohne **Parts No.** werden nicht geliefert.

Note: For detail parts of the mechanism ass'y, refer to KX-55 Service Manual.

Ref. No. 参照番号	Parts No. 部品番号	Description 部品名／規格	Remarks 備考
KX-55C			
1 3B	NO STOCK	MAIN CHASSIS	
3 1B	NO STOCK	DRESSING PANEL	
4 2B	NO STOCK	SUB PANEL	
5 1B	NO STOCK	REAR PANEL	
6 3A	NO STOCK	BOTTOM PLATE	
7 2B	NO STOCK	PANEL ESCUTCHEON	
8 2A	NO STOCK	MOUNTING HARDWARE(PHONE	
9 2B	NO STOCK	MOUNTING HARDWARE(MIC)	
20 1A	A01-0628-03	METALLIC CABINET	
21 3A	A20-2117-03	FRONT PANEL	*K
21 3A	A20-2117-03	FRONT PANEL	PU
21 3A	A20-2117-03	FRONT PANEL	MH
21 3A	A20-2117-03	FRONT PANEL	UE
21 3A	A20-2117-03	FRONT PANEL	X
21 3A	A20-2118-03	FRONT PANEL	*T
21 3A	A20-2119-03	FRONT PANEL	*E
22 2A	A21-0944-03	DRESSING PANEL ASSY	
23 2A	A53-0266-04	CASSETTE HOLDER ASSY	
24 3A	A53-0247-04	CASSETTE DOOR ASSY	
25 2B	A53-0248-04	CASSETTE DOOR	
-	B46-0055-30	WARRANTY CARD	P
-	B46-0060-00	WARRANTY CARD	T
-	B46-0061-30	WARRANTY CARD	K
-	B46-0062-30	WARRANTY CARD	UH
-	B46-0062-30	WARRANTY CARD	UE
-	B46-0063-13	WARRANTY CARD	UH
-	B46-0063-13	WARRANTY CARD	UE
-	B46-0064-20	WARRANTY CARD	X
-	B46-0078-03	WARRANTY CARD	E
-	B50-4450-00	INST MANUAL(ENG)	*K
-	B50-4450-00	INST MANUAL(ENG)	UH
-	B50-4450-00	INST MANUAL(ENG)	UE
-	B50-4451-00	INST MANUAL(ENG/FR)	*P
-	B50-4451-00	INST MANUAL(ENG/FR)	MX
-	B50-4452-00	INST MANUAL(SPANISH)	*M
-	B50-4453-00	INST MANUAL(4-LIGUAL)	*E
-	B50-4454-00	INST MANUAL(ENG)	*T
-	B59-0018-00	SERVICE STATIONS LIST	UH
-	B59-0018-00	SERVICE STATIONS LIST	UE
27 3A	B10-0541-03	FRONT GLASS	
55 2A	B35-0218-15	COUNTER	
C1	C91-0079-05	CERAMIC 0.01UF AC125V	
28 2B	D16-0228-04	BELT	
29 2B	D39-0165-05	DAMPER ASSY	
30 1B	D40-0558-05	MECHANISM ASSY (Note)	
-	E29-0114-05	TERMINAL	KP
31 1A	E03-0102-05	3P INLET	UM
31 1A	E03-0102-05	3P INLET	HX
31 1A	E03-0102-05	3P INLET	UE
31 1A	E03-0102-05	3P INLET	TE
32 1B	E30-0505-05	AUDIO CORD LUG	
32 1B	E30-1353-05	AUDIO CORD LUG	
33 1B	E30-1305-15	POWER CORD	UM
33 1B	E30-1305-15	POWER CORD	UE
33 1B	E30-1305-15	POWER CORD	H
33 1B	E30-1328-15	POWER CORD	T
33 1B	E30-1329-05	POWER CORD	E
33 1B	E30-1342-05	POWER CORD	X
33 1B	E30-1350-05	POWER CORD	KP
34 2A	G01-1157-04	COIL SPRING	
35 2A	G01-1158-04	COIL SPRING	
36 1B	G13-0439-04	CUSHION	
37 2A	G16-0346-04	SHEET	
-	H01-4350-04	CARTON BOX	*T
-	H01-4351-04	CARTON BOX	*K
-	H01-4351-04	CARTON BOX	PU
-	H01-4351-04	CARTON BOX	MH
-	H01-4351-04	CARTON BOX	UE
-	H01-4351-04	CARTON BOX	XE
-	H10-2304-02	POLYSTYRENE FIXTURE	
-	H20-1107-04	COVER	KP
-	H20-1107-04	COVER	UX
-	H20-1107-04	COVER	UE
-	H20-1107-04	COVER	TE
-	H20-1109-04	COVER	M
-	H25-0078-04	BAG (235X315)	
38 3A,3B	J02-0343-05	FOOT	
39 1B	J42-0083-05	BUSHING	KP
40 2A	J42-0326-04	ESCUTCHEON	
41 2A	K27-0656-14	KNOB (POWER)	
42 2B	K29-0442-04	KNOB (REC LEVEL)	
43 2A	K29-0959-04	KNOB ASSY (EJECT)	
45A 2A	K29-0961-14	KNOB (PUSH)X3	
45B 2A	K29-1018-14	KNOB (DOLBY)X2	
46 2B	L01-6461-05	POWER TRANS	KP
46 2B	L01-6464-05	POWER TRANS	UM
46 2B	L01-6464-05	POWER TRANS	HX
46 2B	L01-6464-05	POWER TRANS	UE
46 2B	L01-6464-05	POWER TRANS	TE
47A 1B	N09-0292-05	SCREW	
47B 1A	N09-0377-05	SCREW	
48 2B	N09-0979-05	SCREW	
49 2B	N09-0311-05	SCREW	UM
49 2B	N09-0311-05	SCREW	UE
49 2B	N09-0311-05	SCREW	HX
49 2B	N09-0311-05	SCREW	TE
49 2B	N09-0982-05	SCREW	KP
50 2B	N09-0810-04	SCREW	
51 2A,2B	N29-0216-05	FASTENER	
-	S46-1325-05	LEAF SWITCH	
S1	S40-1035-05	PUSH SWITCH (POWER)	KP
S1	S40-1037-05	PUSH SWITCH (POWER)	UM
S1	S40-1037-05	PUSH SWITCH (POWER)	HX
S1	S40-1037-05	PUSH SWITCH (POWER)	UE
S1	S40-1037-05	PUSH SWITCH (POWER)	TE
52 1B	T32-0010-05	ERASE HEAD (MECHANISM)	
53 1B	T34-0022-05	REC/PLAYBACK HEAD	
54 1B	T42-0108-05	MOTOR	
-	W01-0301-05	HEAD CLEANING BAR	
56 2B,3B	X28-1470-11	AMPLIFIER PC BOARD ASSY	*K
56 2B,3B	X28-1470-11	AMPLIFIER PC BOARD ASSY	P
56 2B,3B	X28-1470-82	AMPLIFIER PC BOARD ASSY	*U
56 2B,3B	X28-1470-82	AMPLIFIER PC BOARD ASSY	MH
56 2B,3B	X28-1470-82	AMPLIFIER PC BOARD ASSY	UE
56 2B,3B	X28-1470-82	AMPLIFIER PC BOARD ASSY	XT
56 2B,3B	X28-1470-82	AMPLIFIER PC BOARD ASSY	E
57 3B	X29-1330-01	CONTROL AMP PCB ASSY	

E: Scandinavia & Europe H: Audio Club K: USA P: Canada
S: South Africa T: England U: PX (Far East, Hawaii)
UE: AAFES (Europe) X: Australia M: Other Areas

www.hifiengine.com

* New Parts

Parts without **Parts No.** are not supplied.
Les articles non mentionnés dans le **Parts No.** ne sont pas fournis.
Teile ohne **Parts No.** werden nicht geliefert.

PARTS LIST

Note: For detail parts of the mechanism ass'y, refer to KX-55 Service Manual.

Ref. No. 参照番号	Parts No. 部品番号	Description 部品名／規格	Remarks 備考
KX-5X			
1 3B	NO STOCK	MAIN CHASSIS	
3 1B	NO STOCK	DRESSING PANEL	
4 2B	NO STOCK	SUB PANEL	
5 1B	NO STOCK	REAR PANEL	
6 3A	NO STOCK	BOTTOM PLATE	
7 2B	NO STOCK	PANEL ESCUTCHEON	
8 2A	NO STOCK	MOUNTING HARDWARE(PHONE	
9 2B	NO STOCK	MOUNTING HARDWARE(MIC)	
20 1A	A01-0629-02	METALLIC CABINET	
21 3A	A20-2133-02	FRONT PANEL	*K
21 3A	A20-2133-02	FRONT PANEL	PU
21 3A	A20-2133-02	FRONT PANEL	MH
21 3A	A20-2133-02	FRONT PANEL	UE
21 3A	A20-2133-02	FRONT PANEL	X
21 3A	A20-2134-02	FRONT PANEL	*T
22 2A	A21-0954-03	DRESSING PANEL	*
23 2A	A53-0258-04	CASSETTE HOLDER ASSY	
24 3A	A53-0272-04	CASSETTE DOOR ASSY	*
25 3A	A53-0248-04	CASSETTE DOOR	
-	B46-0055-30	WARRANTY CARD	P
-	B46-0060-00	WARRANTY CARD	T
-	B46-0061-30	WARRANTY CARD	K
-	B46-0062-30	WARRANTY CARD	UH
-	B46-0062-30	WARRANTY CARD	UE
-	B46-0063-13	WARRANTY CARD	UH
-	B46-0063-13	WARRANTY CARD	UE
-	B46-0064-20	WARRANTY CARD	X
-	B46-0078-03	WARRANTY CARD	E
-	B50-4460-00	INST MANUAL	*K
-	B50-4460-00	INST MANUAL	UH
-	B50-4460-00	INST MANUAL	UE
-	B50-4461-00	INST MANUAL	*P
-	B50-4461-00	INST MANUAL	MX
-	B50-4462-00	INST MANUAL	*T
-	B50-4463-00	INST MANUAL	*E
-	B50-4465-00	INST MANUAL	*M
-	B59-0018-00	SERVICE STATIONS LIST	UH
-	B59-0018-00	SERVICE STATIONS LIST	UE
27 2A	B10-0543-03	FRONT GLASS ASSY	*
55 2A	B35-0218-15	COUNTER	
C1	C91-0023-05	CERAMIC 0.01UF AC250V	UM
C1	C91-0023-05	CERAMIC 0.01UF AC250V	HX
C1	C91-0023-05	CERAMIC 0.01UF AC250V	UE
C1	C91-0079-05	CERAMIC 0.01UF AC125V	KP
C1	C91-0079-05	CERAMIC 0.01UF AC125V	TE
28 2B	D16-0228-04	BELT	
29 1B	D39-0165-05	DAMPER ASSY	
30 1B	D40-0558-05	MECHANISM ASSY (Note)	
31 1A	E03-0102-05	3P INLET	UM
31 1A	E03-0102-05	3P INLET	HX
31 1A	E03-0102-05	3P INLET	UE
31 1A	E03-0102-05	3P INLET	TE
32 1B	E30-0505-05	AUDIO CORD	
32 1B	E30-1353-05	AUDIO CORD	
33 1B	E30-1305-15	POWER CORD	UM
33 1B	E30-1305-15	POWER CORD	UE
33 1B	E30-1305-15	POWER CORD	H
33 1B	E30-1328-15	POWER CORD	T
33 1B	E30-1329-05	POWER CORD	E
33 1B	E30-1342-05	POWER CORD	X
33 1B	E30-1350-05	POWER CORD	KP
34 2A	G01-1157-04	COIL SPRING	
35 2A	G01-1158-04	COIL SPRING	
36 1B,3B	G13-0439-04	CUSHION	
37 2A	G16-0346-04	SHEET	
-	H01-3482-04	CARTON BOX	*T
-	H01-3483-04	CARTON BOX	*K
-	H01-3483-04	CARTON BOX	PU
-	H01-3483-04	CARTON BOX	MH
-	H01-3483-04	CARTON BOX	UE
-	H01-3483-04	CARTON BOX	XE
-	H10-2305-02	POLYSTYRENE FIXTURE	
-	H20-0417-04	COVER	
-	H20-0452-04	COVER	
-	H25-0078-04	BAG (235X315)	
38 3A,3B	J02-0343-05	FOOT	
39 1B	J42-0083-05	BUSHING	KP
40 2A	J42-0326-04	ESCUTCHEON	
41 2A	K27-0683-04	KNOB (POWER)	
42 2B	K29-0996-04	KNOB (REC LEVEL)	
43 2A	K29-0995-04	KNOB ASSY (EJECT)	
44 3A	K29-1003-04	KNOB (EJECT)	
45 2A	K29-1005-14	KNOB (TAPE SEL,DOLBY)	
46 2B	L01-6461-05	POWER TRANS	KP
46 2B	L01-6464-05	POWER TRANS	UM
46 2B	L01-6464-05	POWER TRANS	HX
46 2B	L01-6464-05	POWER TRANS	UE
46 2B	L01-6464-05	POWER TRANS	TE
47B 1B	N09-0399-05	SCREW	
47A 1B	N09-0924-04	SCREW	
48 2B	N09-0979-05	SCREW	
49 2B	N09-0311-05	SCREW	
50 2B	N09-0810-04	SCREW	
51 2B,3B	N29-0216-05	FASTENER	
-	S46-1325-05	LEAF SWITCH(MECHANISM)	
S1	S40-1035-05	PUSH SWITCH(POWER)	KP
S1	S40-1037-05	PUSH SWITCH(POWER)	UM
S1	S40-1037-05	PUSH SWITCH(POWER)	HX
S1	S40-1037-05	PUSH SWITCH(POWER)	UE
S1	S40-1037-05	PUSH SWITCH(POWER)	TE
52 1B	T32-0010-05	ERASE HEAD	
53 1B	T34-0022-05	REC/PLAYBACK HEAD	
54 1B	T42-0108-05	MOTOR	
-	W01-0301-05	HEAD CLEANING BAR	
56 2B,3B	X28-1470-12	AMPLIFIER PC BOARD ASSY	*K
56 2B,3B	X28-1470-12	AMPLIFIER PC BOARD ASSY	P
56 2B,3B	X28-1470-83	AMPLIFIER PC BOARD ASSY	*U
56 2B,3B	X28-1470-83	AMPLIFIER PC BOARD ASSY	MH
56 2B,3B	X28-1470-83	AMPLIFIER PC BOARD ASSY	UE
56 2B,3B	X28-1470-83	AMPLIFIER PC BOARD ASSY	XT
56 2B,3B	X28-1470-83	AMPLIFIER PC BOARD ASSY	E
57 3B	X29-1330-11	CONTROL AMP PCB ASSY	
AMP (X28-1470-10)			
D1 -6	B30-0329-05	LAMP	
D7 -14	B30-0328-05	LAMP	
D15	B30-0329-05	LAMP	
D16	B30-0389-05	LAMP	

E: Scandinavia & Europe H: Audio Club K: USA P: Canada
S: South Africa T: England U: PX (Far East, Hawaii)
UE: AAFES (Europe) X: Australia M: Other Areas

www.hifiengine.com

* New Parts

Parts without **Parts No.** are not supplied.
Les articles non mentionnés dans le **Parts No.** ne sont pas fournis.
Teile ohne **Parts No.** werden nicht geliefert.

PARTS LIST

Ref. No. 参照番号	Parts No. 部品番号	Description 部品名／規格	Remarks 備考
C1 ,2	C71-1739-15	CERAMIC 390PF J	
C3 ,4	C24-1747-47	ELECTRO 0.47UF 50WV	
C5 ,6	C52-1710-26	CERAMIC 0.001UF K	
C7 ,8	C24-1747-47	ELECTRO 0.47UF 50WV	
C9 ,10	C71-1756-15	CERAMIC 560PF J	
C11 ,12	C24-1722-57	ELECTRO 2.2UF 50WV	
C13	C24-1010-77	ELECTRO 100UF 10WV	
C14	C24-1010-77	ELECTRO 100UF 10WV	
C15 ,16	C71-1739-15	CERAMIC 390PF J	
C17 ,18	C45-1782-25	MYLAR 0.0082UF J	
C19 ,20	C24-6547-57	ELECTRO 4.7UF 35WV	
C21 ,22	C45-1718-35	MYLAR 0.018UF J	
C23 ,24	C24-1210-67	ELECTRO 10UF 16WV	
C25 ,26	C24-1710-57	ELECTRO 1UF 50WV	
C27 ,28	C71-1739-15	CERAMIC 390PF J	
C29 ,30	C24-1247-67	ELECTRO 47UF 16WV	
C31 ,32	C24-1210-67	ELECTRO 10UF 16WV	
C33 ,34	C24-1010-77	ELECTRO 100UF 10WV	
C35 ,36	C24-1022-77	ELECTRO 220UF 10WV	
C37 -40	C45-1715-35	MYLAR 0.015UF J	
C41 ,42	C24-1210-67	ELECTRO 10UF 16WV	
C43 ,44	C45-1710-35	MYLAR 0.01UF J	
C45 ,46	C45-1718-35	MYLAR 0.018UF J	
C47 ,48	C24-6547-57	ELECTRO 4.7UF 35WV	
C49 -52	C24-1733-47	ELECTRO 0.33UF 50WV	
C53 -56	C24-1710-57	ELECTRO 1UF 50WV	
C57 ,58	C24-1210-67	ELECTRO 10UF 16WV	
C59 ,60	C71-1739-05	CERAMIC 39PF J	
C61 ,62	C45-1756-25	MYLAR 0.0056UF J	
C63 ,64	C45-1710-25	MYLAR 0.001UF J	
C65 ,66	C24-1210-67	ELECTRO 10UF 16WV	
C67 ,68	C45-1739-25	MYLAR 0.0039UF J	
C69 ,70	C45-1733-25	MYLAR 0.0033UF J	
C71 ,72	C45-1782-35	MYLAR 0.082UF J	
C73 ,74	C24-6547-57	ELECTRO 4.7UF 35WV	
C75 ,76	C45-1715-45	MYLAR 0.15UF J	
C77 ,78	C24-1747-47	ELECTRO 0.47UF 50WV	
C79 ,80	C24-1210-67	ELECTRO 10UF 16WV	
C81 ,82	C24-1222-67	ELECTRO 22UF 16WV	
C83 ,84	C24-1722-47	ELECTRO 0.22UF 50WV	
C85 ,86	C45-1756-25	MYLAR 0.0056UF J	
C87 ,88	C24-1210-67	ELECTRO 10UF 16WV	
C89 ,90	C24-1733-57	ELECTRO 3.3UF 50WV	
C91 ,92	C71-1710-15	CERAMIC 100PF J	
C93 ,94	C71-1722-15	CERAMIC 220PF J	
C95 ,96	C24-1210-67	ELECTRO 10UF 16WV	
C97 ,98	C45-1713-35	MYLAR 0.013UF J	
C99 ,100	C45-1747-35	MYLAR 0.047UF J	
C101,102	C45-1710-35	MYLAR 0.01UF J	
C103,104	C45-1747-35	MYLAR 0.047UF J	
C105,106	C24-1710-57	ELECTRO 1UF 50WV	
C107,108	C24-1247-67	ELECTRO 47UF 16WV	
C109,110	C24-1710-47	ELECTRO 0.1UF 50WV	
C111,112	C24-1210-67	ELECTRO 10UF 16WV	
C113,114	C71-1722-15	CERAMIC 220PF J	
C115,116	C71-1727-15	CERAMIC 270PF J	
C201	C24-1247-67	ELECTRO 47UF 16WV	
C202	C24-1247-67	ELECTRO 47UF 16WV	
C203,204	C24-1210-67	ELECTRO 10UF 16WV	
C205	C24-1210-77	ELECTRO 100UF 16WV	
C206	C24-1247-67	ELECTRO 47UF 16WV	
C207	C24-6547-57	ELECTRO 4.7UF 35WV	

Ref. No. 参照番号	Parts No. 部品番号	Description 部品名／規格	Remarks 備考
C208	C91-0343-05	POLYPRO 1000PF 630WV	
C209	C24-1410-77	ELECTRO 100UF 25WV	
C210	C45-1710-35	MYLAR 0.01UF J	
C211	C24-1410-67	ELECTRO 10UF 25WV	
C212	C45-1722-35	MYLAR 0.022UF J	
C213	C24-1010-77	ELECTRO 100UF 10WV	
C214	C24-1022-67	ELECTRO 22UF 10WV	
C215	C24-1210-67	ELECTRO 10UF 16WV	
C216	C55-1710-38	CERAMIC 0.01UF Z	
C217	C24-1010-77	ELECTRO 100UF 10WV	
C218	C45-1733-35	MYLAR 0.033UF J	
C219	C24-1010-77	ELECTRO 100UF 10WV	
C220,221	C24-1710-57	ELECTRO 1UF 50WV	
C222	C24-1210-67	ELECTRO 10UF 16WV	
C223	C24-1410-77	ELECTRO 100UF 25WV	
C224	C55-1710-38	CERAMIC 0.01UF Z	
C225	C24-6522-87	ELECTRO 2200UF 35WV	
C226	C24-6547-57	ELECTRO 4.7UF 35WV	
C227	C24-1210-77	ELECTRO 100UF 16WV	
C228	C24-1210-87	ELECTRO 1000UF 16WV	
C229	C55-1710-38	CERAMIC 0.01UF Z	
C230	C55-1710-38	CERAMIC 0.01UF Z	
C231	C24-1210-67	ELECTRO 10UF 16WV	
101 3B	E11-0327-05	PHONE JACK (MIC)	10
101 3B	E11-0327-05	PHONE JACK (MIC)	81
101 3B	E11-0329-05	PHONE JACK (MIC)	12
101 3B	E11-0329-05	PHONE JACK (MIC)	83
101 3B	E11-0330-05	PHONE JACK (MIC)	11
101 3B	E11-0330-05	PHONE JACK (MIC)	82
102 2A	E11-0093-05	PHONE JACK (PHONE)	12
102 2A	E11-0093-05	PHONE JACK (PHONE)	83
102 2A	E11-0331-05	PHONE JACK (PHONE)	10
102 2A	E11-0331-05	PHONE JACK (PHONE)	81
102 2A	E11-0331-05	PHONE JACK (PHONE)	11
102 2A	E11-0331-05	PHONE JACK (PHONE)	82
103 1B	E13-0432-05	PHONO JACK	
CN1	E40-0678-05	PIN CONNECTOR	
CN2	E40-0278-05	PIN CONNECTOR	
JC1 ,2	E40-0656-05	PIN CONNECTOR	
L1 ,2	L79-0312-05	FILTER	
L3 ,4	L39-0322-05	COIL	
L5 ,6	L40-6825-21	INDUCTOR	
L5 ,6	L40-6825-66	INDUCTOR	
L7 ,8	L39-0312-05	COIL	
L9	L32-0513-15	OSCILLATING COIL	
R147,148	R42-1356-15	FL-PROOF RD560 J 2H	
R211	R92-0508-05	FUSE-RESIST22 J 2E	
R215	R92-0508-05	FUSE-RESIST22 J 2E	
R217	R42-1310-05	FL-PROOF RD10 J 2H	
R218	R47-5415-15	FL-PROOF RS150 J 3A	
R219	R47-5418-15	FL-PROOF RS180 J 3A	
R234	R47-5468-05	FL-PROOF RS68 J 3A	
R239	R42-1310-15	FL-PROOF RD100 J 2H	
VR1	R10-5301-05	POTENTIOMETER (MIC)	10
VR1	R10-5301-05	POTENTIOMETER (MIC)	81
VR2	R06-5301-05	POTENTIOMETER	
VR3 -6	R12-3068-05	TRIMMING POTENTIOMETER	
VR7 ,8	R12-4026-05	TRIMMING POTENTIOMETER	
VR9 ,10	R12-6008-05	TRIMMING POTENTIOMETER	
S1	S42-5301-05	PUSH SWITCH	*

10: X28-1470-10 11: X28-1470-11
12: X28-1470-12 81: X28-1470-81
82: X28-1470-82 83: X28-1470-83

www.hifiengine.com

PARTS LIST

* New Parts
Parts without **Parts No.** are not supplied.
Les articles non mentionnés dans le **Parts No.** ne sont pas fournis.
Teile ohne **Parts No.** werden nicht geliefert.

Ref. No. 参照番号	Parts No. 部品番号	Description 部品名／規格	Remarks 備考
D17 -21	V11-7700-30	1S2473	
D22 ,23	V11-2400-20	W02	
D24	V11-0295-05	W06B	
IC1	V30-0691-10	AN7310	
IC2	V30-0558-10	UPC78M18H	
IC3 ,4	V30-0777-10	HA12038	
IC5 ,6	V30-0805-10	AN6882	*
Q1 ,2	V03-2634-00	2SC2634	
Q3 -6	V03-1841-00	2SC1841	
Q7 -10	V08-0284-10	JC501(P,Q,R)	
Q11 ,12	V03-2634-00	2SC2634	
Q13 ,14	V08-0284-10	JC501(P,Q,R)	
Q15 ,16	V03-2634-00	2SC2634	
Q17 ,18	V08-0284-10	JC501(P,Q,R)	
Q19 ,20	V03-0945-12	KSC945C(Y,G)	
Q51 -53	V03-2060-00	2SC2060	
Q54 -56	V01-0733-51	KSA733(Y,G)	
Q57	V01-0992-10	2SA992(F,E)	
Q58	V03-1845-00	2SC1845	
Q59	V03-2060-00	2SC2060	
Q60	V04-0330-00	2SD330	
CONTROL (X29-1330-00)			
D10 ,11	B30-0743-05	LED (REVIEW,CUE)	00
D12	B30-0337-05	LED (REC)	
D13	B30-0338-05	LED (PLAY)	
C1	C45-1710-25	MYLAR 0.001UF J	
C2	C71-1710-15	CERAMIC 100PF J	
C3	C24-1410-67	ELECTRO 10UF 25WV	
C4	C24-1710-57	ELECTRO 1UF 50WV	
C5 ,6	C45-1733-35	MYLAR 0.033UF J	
C7	C71-1733-05	CERAMIC 33PF J	
C8	C55-1710-38	CERAMIC 0.01UF Z	
C9 ,10	C24-1747-47	ELECTRO 0.47UF 50WV	
C11	C24-1210-77	ELECTRO 100UF 16WV	
C12	C24-1410-77	ELECTRO 100UF 25WV	
C13	C24-1210-77	ELECTRO 100UF 16WV	
CN1	E40-0473-05	PIN CONNECTOR	
CN2	E40-0873-05	PIN CONNECTOR	
RCS1	E06-0801-05	CONNECTOR	00
RCS1	E06-0801-05	CONNECTOR	11
R48 -50	R47-5556-05	FL-PROOF RS56 J 3D	
R54	R42-1356-15	FL-PROOF RD560 J 2H	
S1 -6	S40-1040-05	PUSH SWITCH	
S7	S31-2315-05	SLIDE SWITCH	
201 28	T95-0013-05	PHOTO INTERRUPTER	
D1 -3	V11-1200-80	1SS53	
D4 -9	V11-0295-05	W06B	
IC1	V30-0664-10	UPD554C-85	
IC2	V30-0589-10	UPD4069UBC	
Q1	V08-0278-10	JA100	
Q2	V03-0945-12	KSC945C(Y,G)	
Q3 ,4	V03-0945-61	2SC945(A)(Q,P,K)	
Q5	V08-0278-10	JA100	
Q6 ,7	V03-0945-12	KSC945C(Y,G)	
Q8 -10	V03-2060-00	2SC2060	
Q11	V03-0945-12	KSC945C(Y,G)	
Q12	V01-0934-00	2SA934	
Q13	V03-0945-12	KSC945C(Y,G)	

00: X29-1330-00
11: X29-1330-11

Different Parts of Models

Item	KX-55C	KX-77C	KX-5XC
	X28-1470-		
PCB Ass'y	X28-1470-11 or X28-1470-82	X28-1470-10 or X28-1470-81	X28-1470-12 or X28-1470-83
R15, 16	150	68	150
R47, 48	NO	47k	NO
VR1 (MIC)	NO	YES	NO
Phone Jack (MIC)	E11-0330-05	E11-0327-05	E11-0329-05
Phone Jack (PHONE)	E11-0331-05	E11-0331-05	E11-0093-05
	X29-1330-		
PCB Ass'y	X29-1330-01	X29-1330-00	X29-1330-11
D10, 11	NO	YES	NO
RCS1	NO	YES	YES

www.hifiengine.com

WORLD MAP & AREA CODE

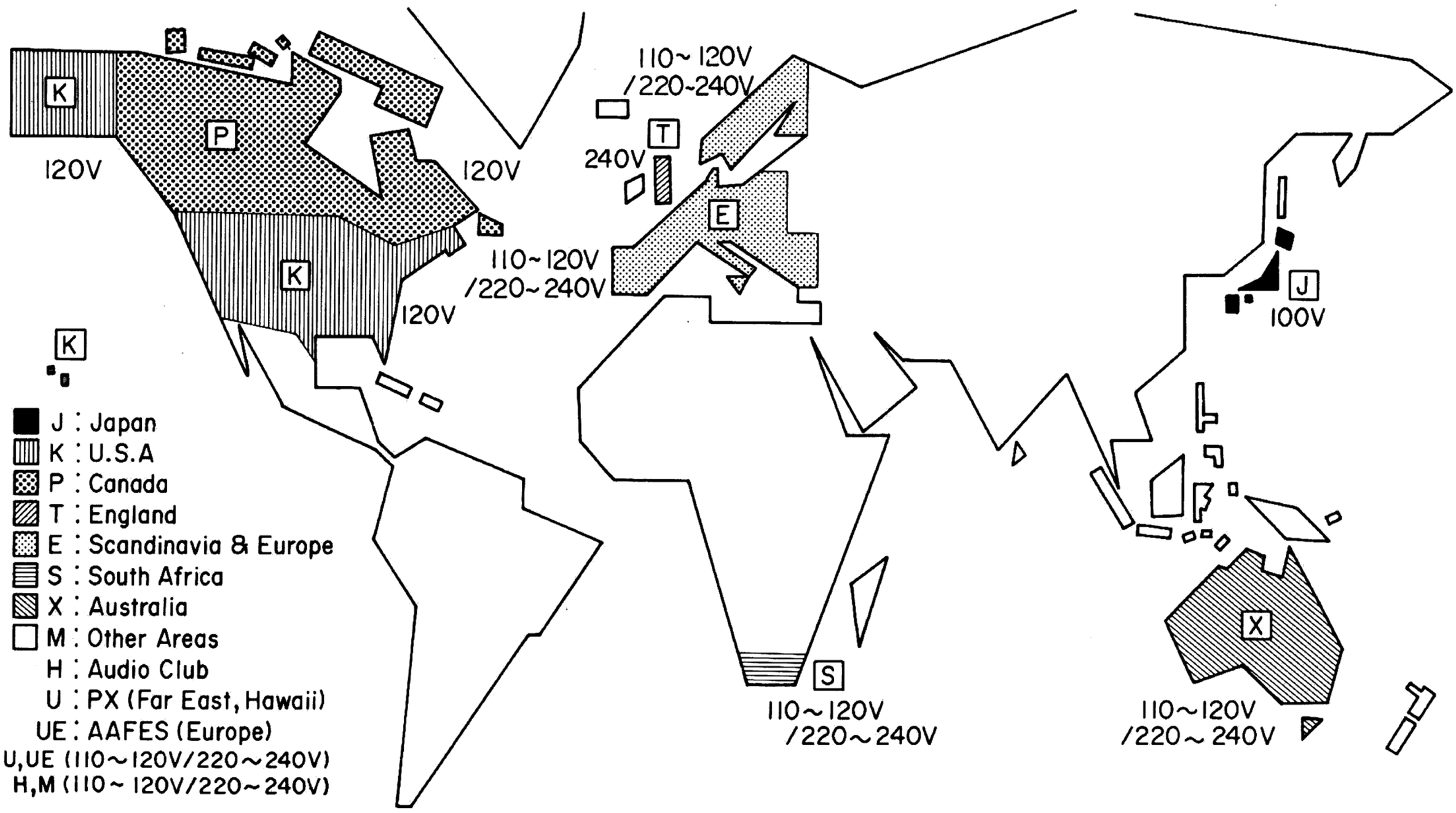

Note:

Component and circuitry are subject to modification to insure best operation under differing local conditions. This manual is based on, the U.S. (K) standard, and provides information on regional circuit modification through use of alternate schematic diagrams, and information on regional component variations through use of parts list.

A product of

TRIO-KENWOOD CORPORATION

Shionogi Shibuya Building, 17-5, 2-chome Shibuya, Shibuya-ku, Tokyo 150, Japan

KENWOOD U.S.A. CORPORATION
1315 E. Watsoncenter Rd, Carson, California 90745, U.S.A.
75 Seaview Drive, Secaucus, New Jersey 07094, U.S.A.
TRIO-KENWOOD CANADA INC.
1070 Jayson Court, Mississauga, Ontario, Canada L4W 2V5
TRIO-KENWOOD ELECTRONICS, N.V.
Leuvensesteenweg 504 B-1930 Zaventem, Belgium
TRIO-KENWOOD ELECTRONICS GmbH
Rudolf-Braas-Str 20, 6056 Heusenstamm, West Germany
TRIO-KENWOOD FRANCE S.A.
5, Boulevard Ney, 75018 Paris, France
TRIO-KENWOOD AG
Unterboesh 6331 Huenenberg/ZUG Switzerland
TRIO-KENWOOD (AUSTRALIA) PTY. LTD.
4E Woodcock Place, Lane Cove. N.S.W. 2066, Australia
KENWOOD & LEE ELECTRONICS, LTD.
Wang Kee Building, 5th Floor, 34-37, Connaught Road, Central, Hong Kong

1982-6 PRINTED IN JAPAN B51-1345-00 (G) 2658

www.hifiengine.com