COMPACT DISC PLAYER

L-D1

SERVICE MANUAL

KENWOOD

B51-4636-00(O)431

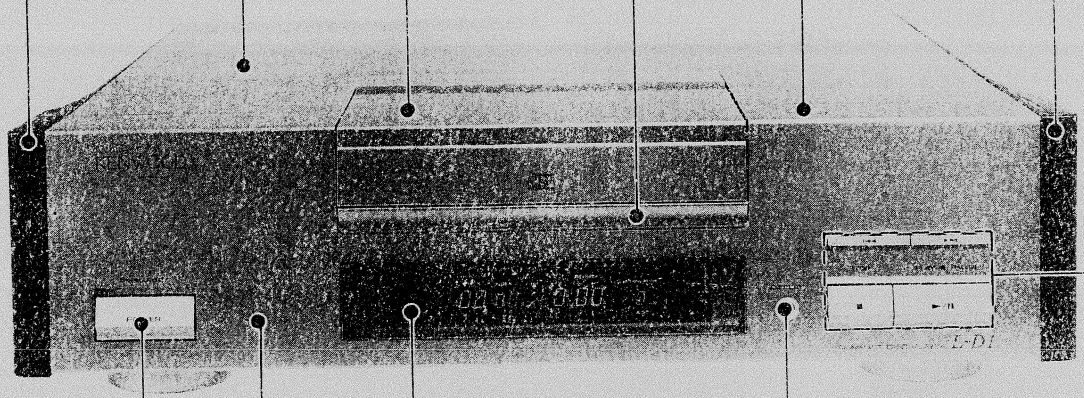

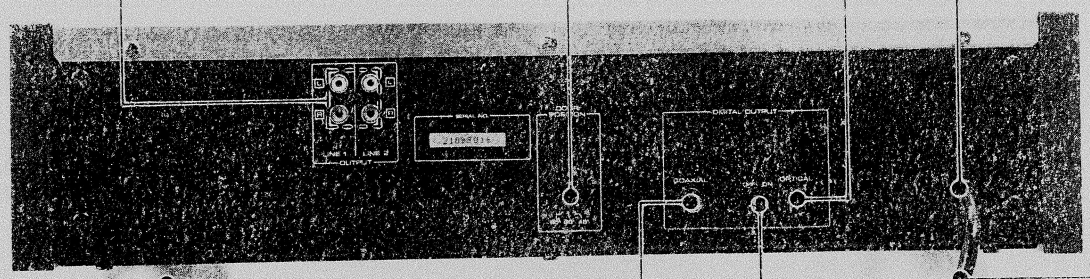

* Refer to parts list on page 43.

In complicance with Federal Regulations, following are reproductions of labels on, or inside the product relating to laser product safty.

KENWOOD-Corp. certifies this equipment conforms to DHHS Regulations No. 21 CFR 1040. 10, Chapter 1, Subchapter J.

DANGER : laser radiation when open and interlock defeated. AVOID DIRECT EXPOSURE TO BEAM.

L-D1

CONTENTS/ACCESSORIES

CONTENTS

Note : Refer to DP-7040 SERVICE MANUAL (B51-4337-00) and LVD-Z1 (B51-4730-00), if need semiconductors information.

ACCESSORIES

• Cord with plug 1
(E30-2600-05)

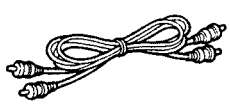

• Clamper ass'y 1
(J11-0188-04)

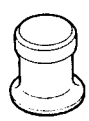

• Batteries 2
(–)

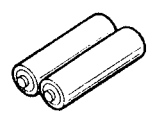

• Remote controller ass'y 1
(A70-0916-05)

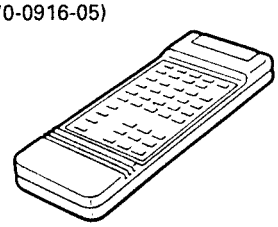

• Battery cover (A09-0143-08)

• AC plug adapter 1
(E19-0207-05)

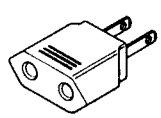

(Except for some areas)
For the unit with a European
AC plug in areas other than Europe.

Precautions when shipping or moving

When shipping or moving the L-D1, please talk the following precautionary procedure :

1. Remove clamper.
2. Confirm that there is no disc inside the machine, and then press the **POWER** key to turn on the power.

▼ Main unit

▼ Remote Control

3. Confirm that the display shows the following message.

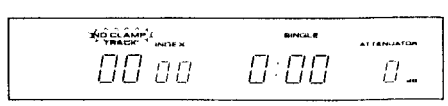

4. Press the **POWER** key to turn off the power.

▼ Main unit

▼ Remote Control

CONTROL

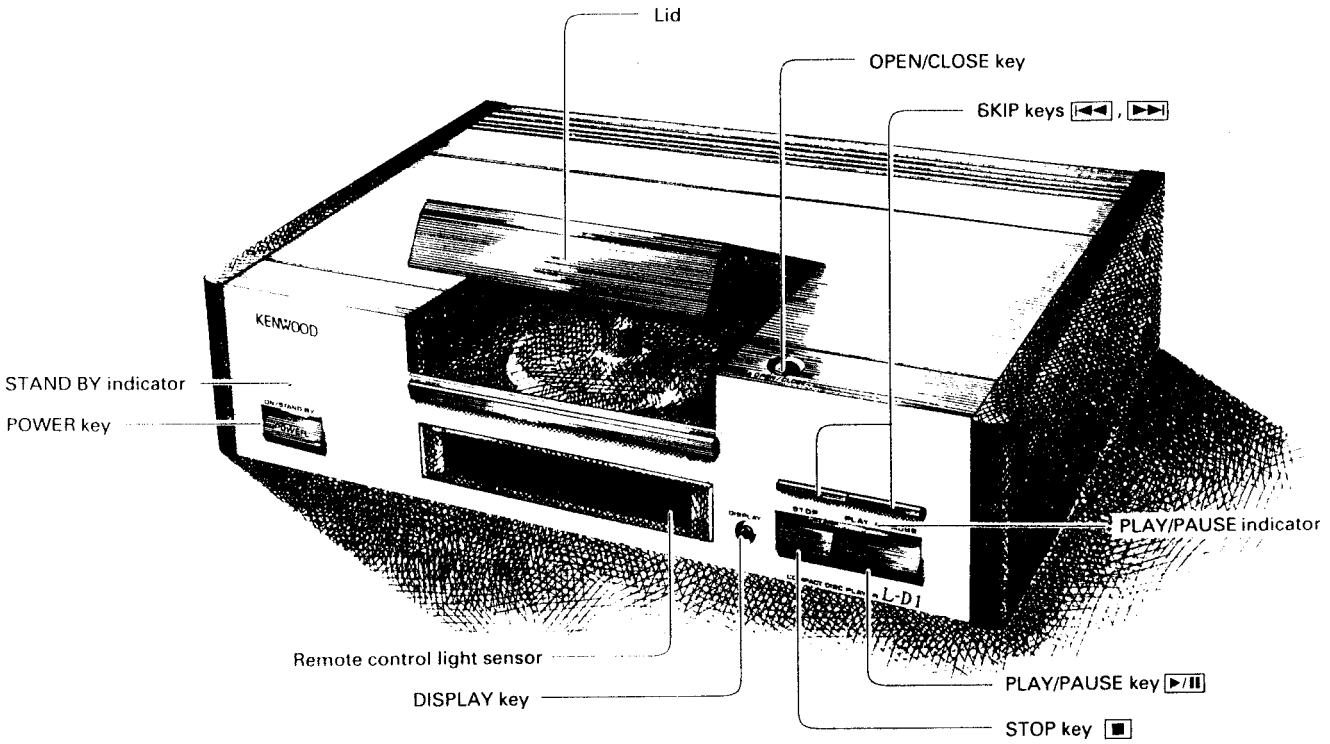

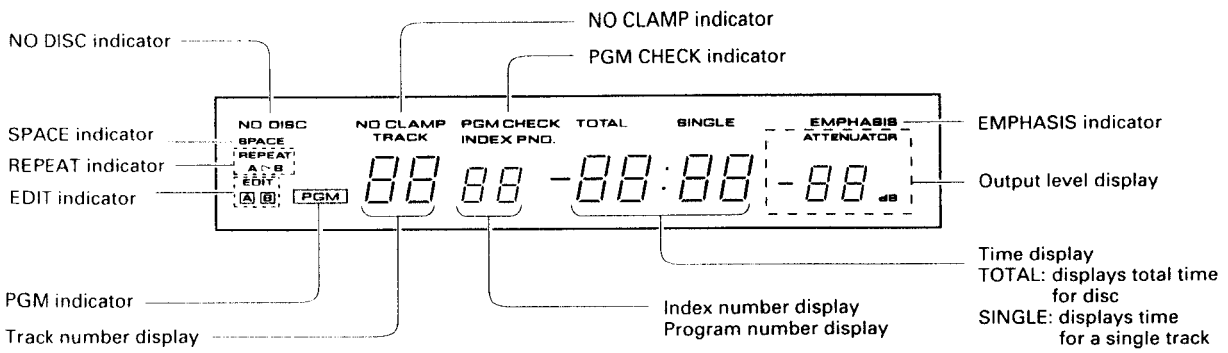

The **DISPLAY** key

If you press the **DISPLAY** key while a disc is being played, the display switches on or off.

- If you press the **STOP** key with all the lights off, the display lights up. To turn off the display, first press the operation key then press the **DISPLAY** key once more.
- If you press the operation key with the lights off, the display lights up for approximately 2 seconds.

Stand by mode of POWER switch

When the power cord of this system is plugged into an AC outlet, the STAND BY indicator lights up regardless of the ON/OFF setting of the POWER switch. This indicates that a small amount of current is being supplied to the unit to back up the memory contents. This mode is referred to as the Stand By mode. While the STAND BY indicator is lit, the power of the system can be switched ON/OFF from the remote control unit.

REMOTE CONTROL OPERATION

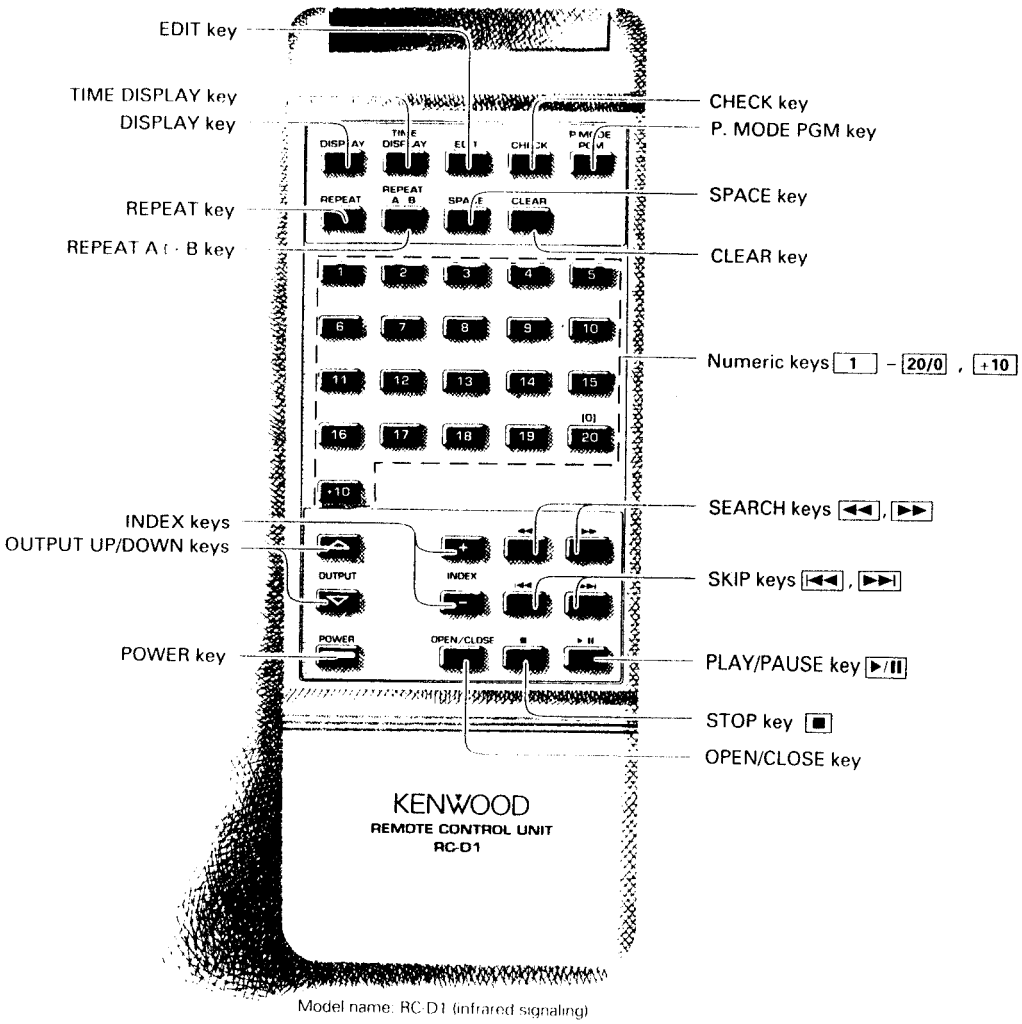

Model name: RC-D1 (infrared signaling)

DISASSEMBLY FOR REPAIR

How to Disassemble

1. Remove 8 screws (❶) and top plate.
2. Open lid (❷).
3. Remove 9 screws (❸).
4. Remove connector and flexible cable (❹). Next do front panel.

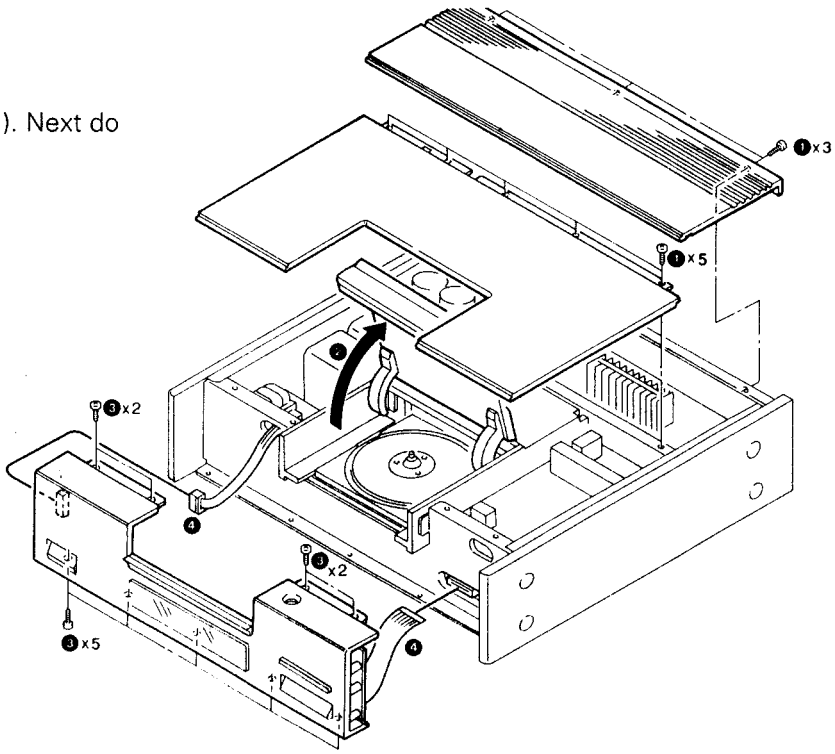

5. Stand the unit as figure (❺).
6. Remove 15 screws (❻) and bottom plate.
7. Remove 4 connectors (❼).
8. Remove 4 screws (❽) and mechanism ass'y.

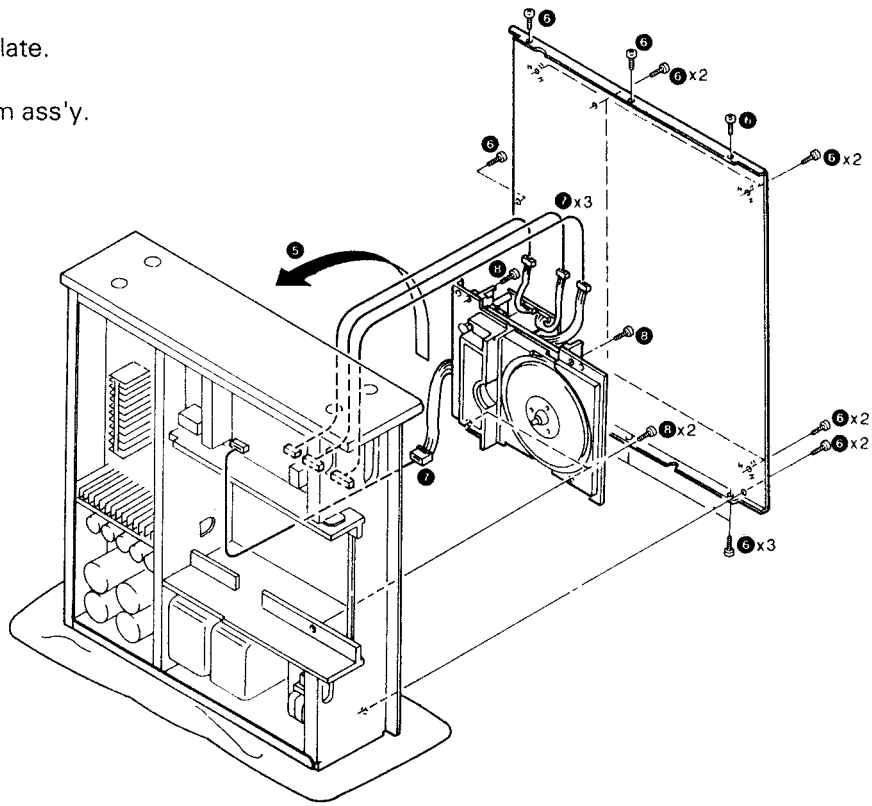

DISASSEMBLY FOR REPAIR

9. Remove 4 screws (❾) and 4 stoppers.
10. Remove shaft (❿).
11. Remove 2 screws (⓫) and lift pickup ass'y.
12. Remove the flexible cable (⓬).

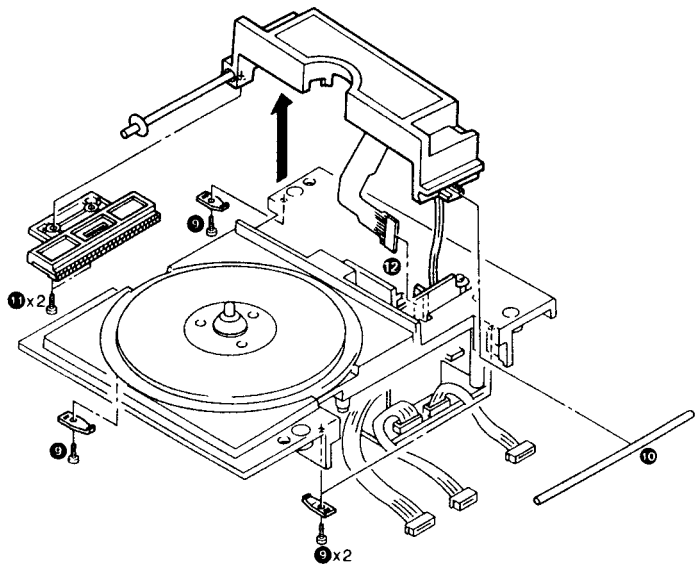

13. Remove 2 screws and 2 stoppers (⓭), and remove pickup.

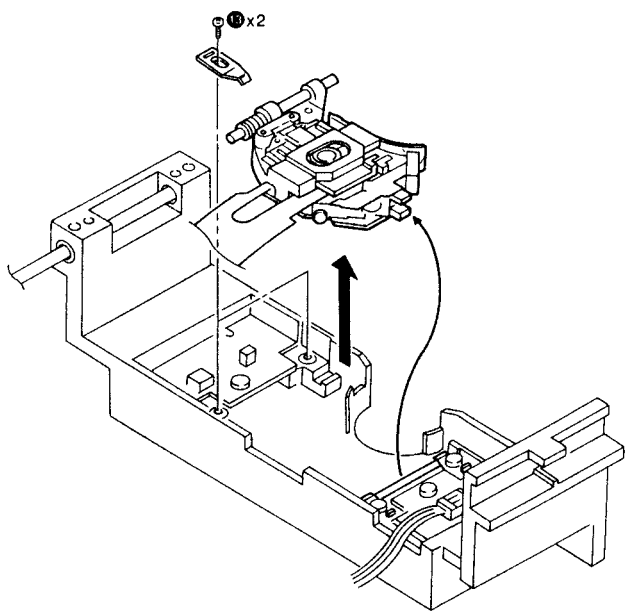

BLOCK DIAGRAM

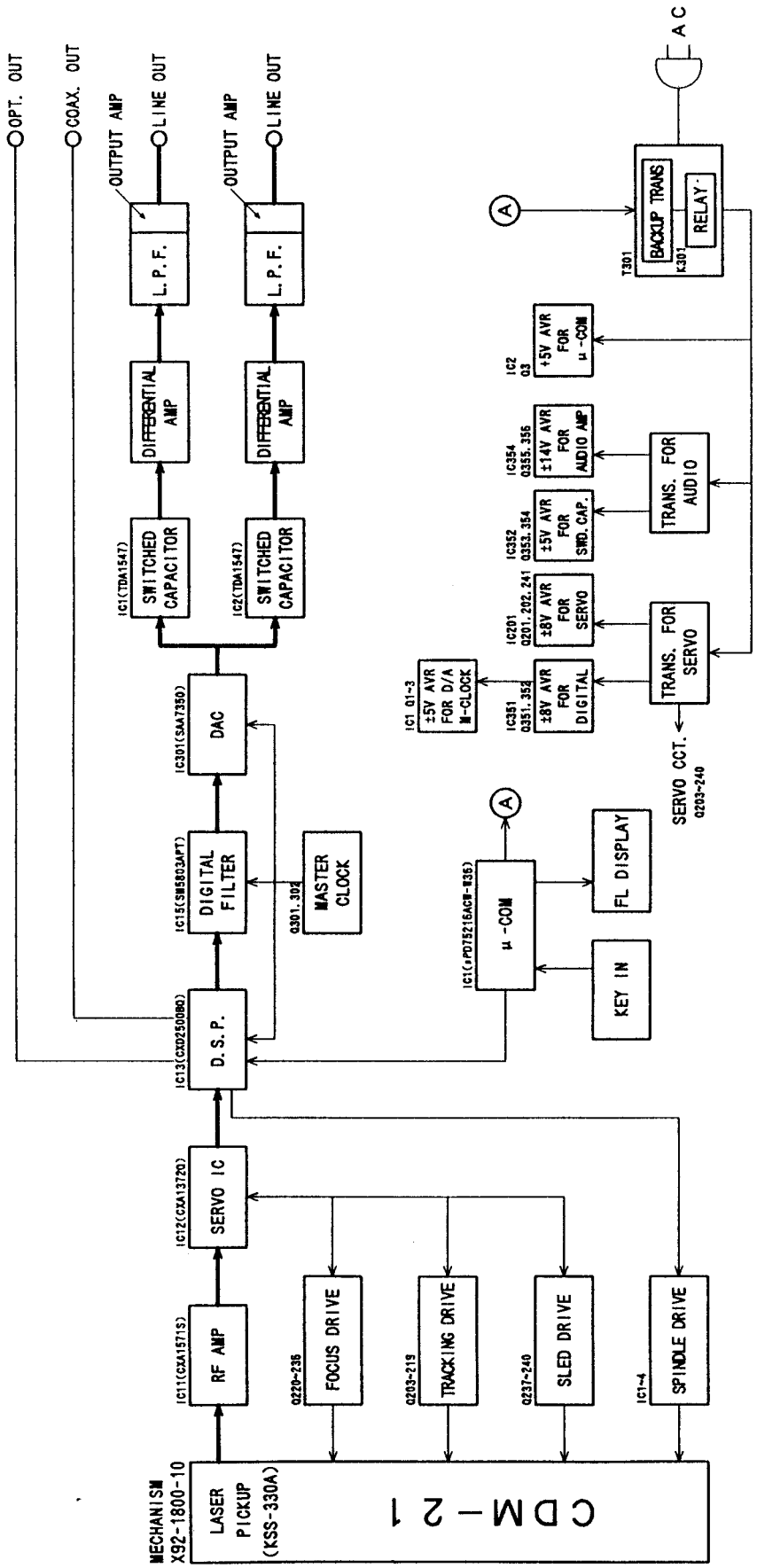

CIRCUIT DESCRIPTION

1. Microprocessor : μPD75216ACW-W36 (IC1 : X25-5180)

1-1. Pin connection

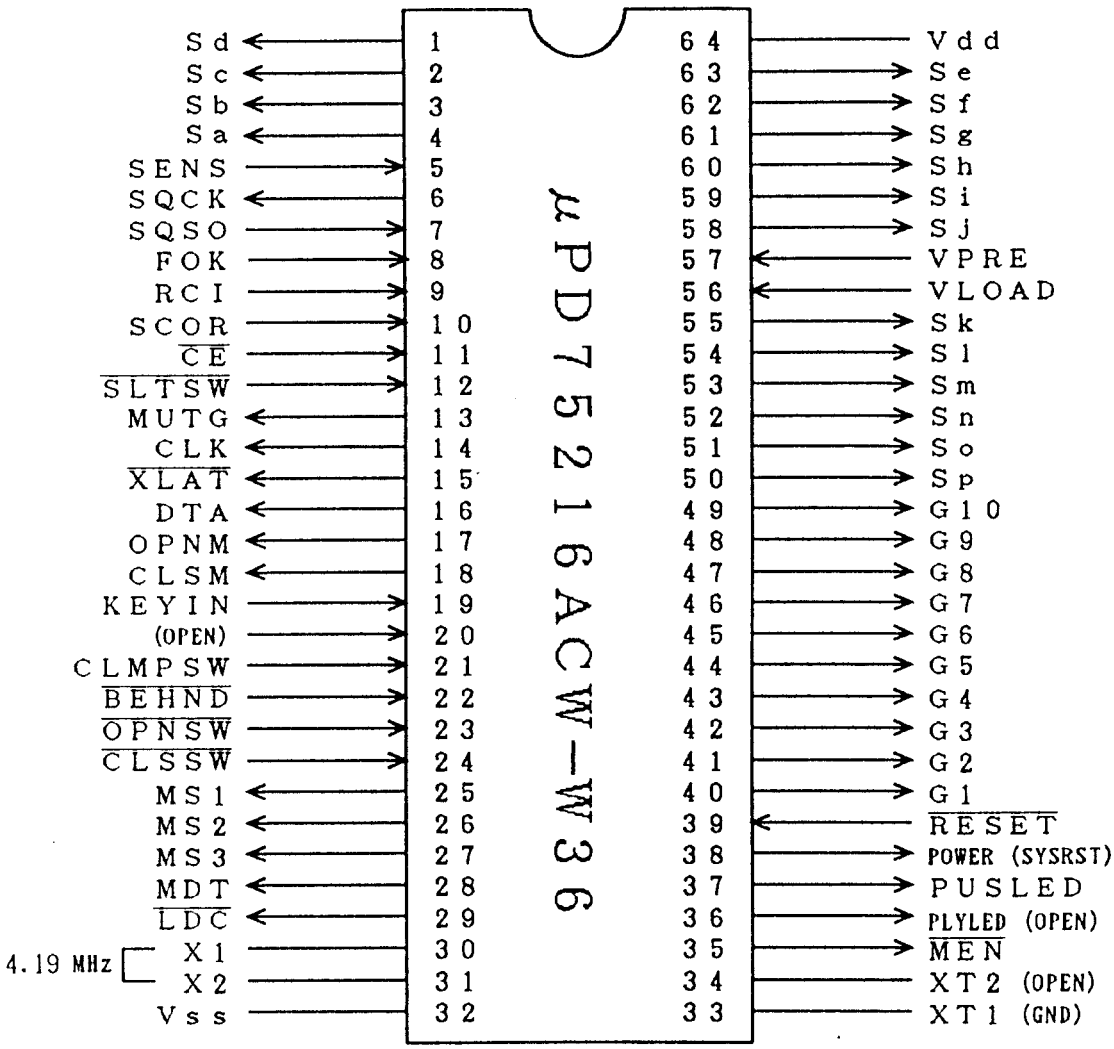

CIRCUIT DESCRIPTION

1-2. Block diagram

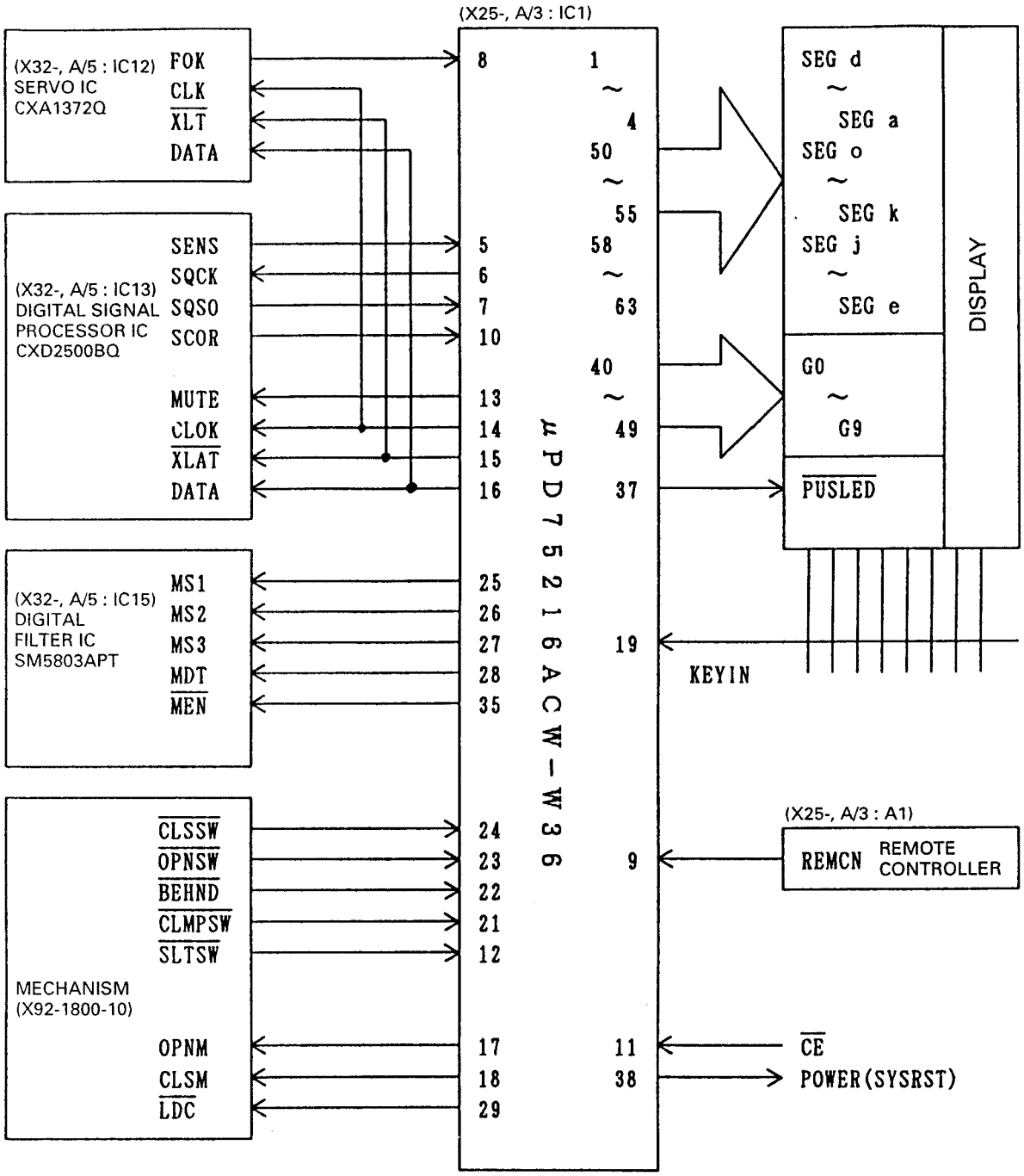

1-3. Key matrix

	Key in (19pin)
Sa (4pin)	(TEST)
Sb (3pin)	POWER
Sc (2pin)	OPEN/CLOSE
Sd (1pin)	SKIP DOWN
Se (63pin)	SKIP UP
Sf (62pin)	PLAY/PAUSE
Sg (61pin)	STOP
Sh (60pin)	DISPLAY MODE

CIRCUIT DESCRIPTION

1-4. Pin function

Pin No.	Pin name	I/O	Remarks
1~4	Sd~Sa	O	FL segment control terminals.
5	SENS	I	Signal detection terminal for SENS signal from signal and servo ICs.
6	SQCK	O	Q data read clock output terminal.
7	SQSO	I	Q data input terminal.
8	FOK	I	Input terminal for FOK signal from RF amp (focus OK="H").
9	RCI	I	Remote control input terminal.
10	SCOR	I	Sub-code frame synch detection signal input terminal.
11	$\overline{\text{CE}}$	I	Chip enable terminal for detecting power supply voltage. blackout="H" to "L".
12	$\overline{\text{SLTSW}}$	I	Start limit switch. L=ON.
13	MUTG	O	Output terminal of muting. H=ON.
14	CLK	O	Clock signal for serial data to signal processor ICs.
15	$\overline{\text{XLAT}}$	O	Latch signal of ending data output to signal processor.
16	DTA	O	Control signal data to signal processor.
17, 18	OPNM, CLSM	O	Lid open signal for open/close motor. OPEN : OPNM="H", CLSM="L"/CLOSE : OPNM="L", CLSM="H"/OTHER :OPNM & CLSM="H".
19	KEYIN	I	Key input terminal.
20	–	I	Open circuit.
21	CLMPSW	I	Clamper position detector terminal. H=ON.
22	$\overline{\text{BEHND}}$	I	Pickup retraction detector terminal. L=ON.
23	$\overline{\text{OPNSW}}$	I	Lid open detector terminal. L=ON.
24	$\overline{\text{CLSSW}}$	I	Lid close detector terminal. L=ON.
25~27	MS1~MS3	O	Mode selector control for digital filter.
28	MDT	O	Mode setting data for digital filter.
29	$\overline{\text{LDC}}$	O	Control signal of laser diode on/off. L=ON
30, 31	X1, X2	I	System control clock generator (4.19MHz).
32	Vss	–	GND.
33	–	I	Vss.
34	XT2	–	Open circuit.
35	$\overline{\text{MEN}}$	O	Mode setting enable terminal for digital filter.
36	–	O	Open circuit.
37	$\overline{\text{PUSLED}}$	O	LED control terminal. PLAY/PAUSE ON="H".
38	POWER	O	Power switch detector terminal. POWER ON="H". System reset.
39	$\overline{\text{RESET}}$	I	Reset signal input terminal. Reset="L".
40~49	G1~G10	O	FL digit control terminals.
50~55	Sp~Sk	O	FL segments control terminal.
56	VLOAD	I	FL driver pull-down resistor connection terminal.
57	VPRE	I	FL driver power supply.
58~63	Sj~Se	O	FL segments control terminal.
64	VDD	–	Power supply (+5V).

CIRCUIT DESCRIPTION

2. Digital Filter : SM5803APT (IC15 : X32-2442)

2-1. Block diagram

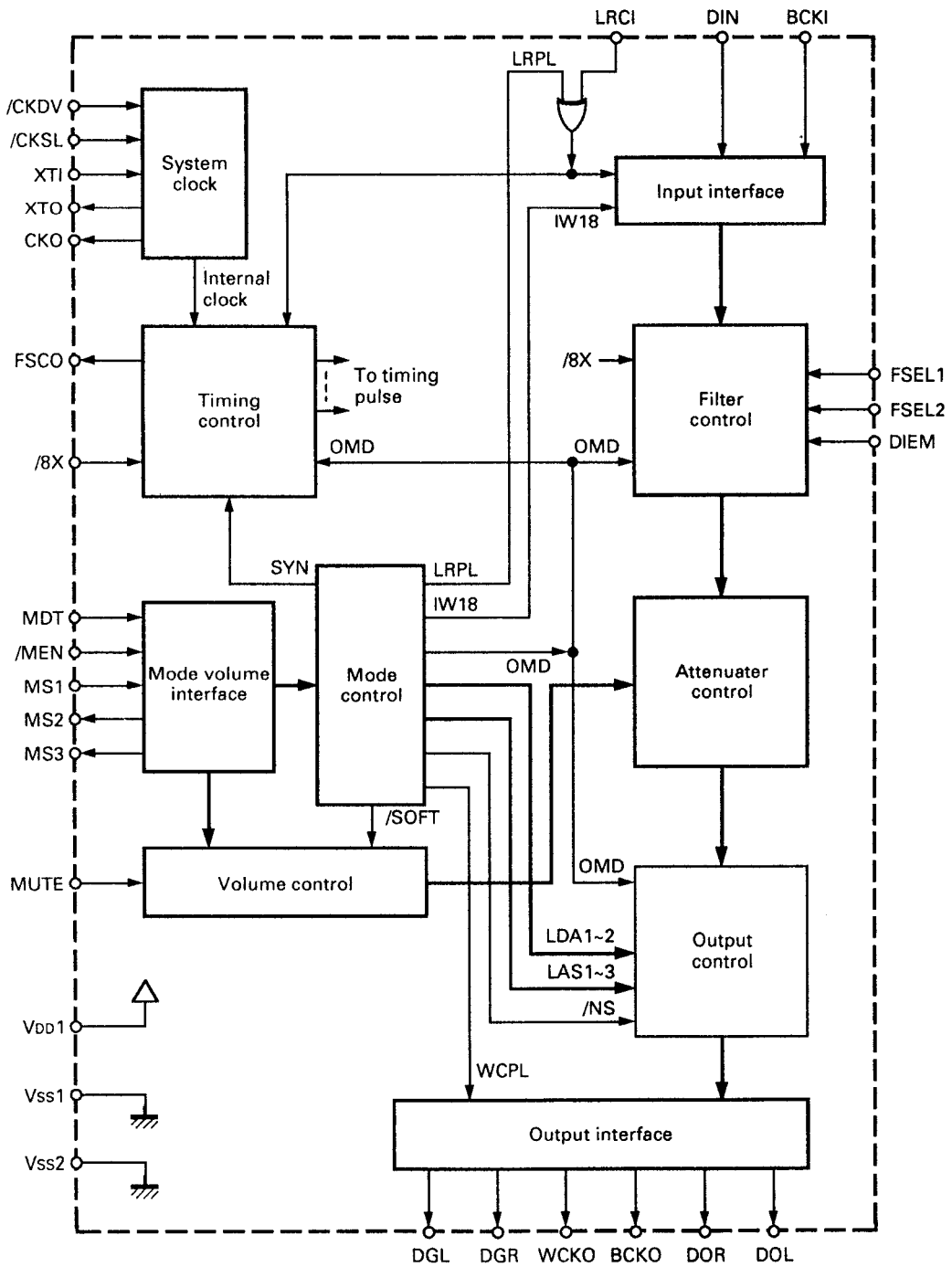

CIRCUIT DESCRIPTION

2-2. Pin connection

DIN	1 ●	28	LRCI
BCKI	2	27	FSCO
/CKSL	3	26	BCKO
/CKDV	4	25	WCKO
/8X	5	24	DOL
XTI	6	23	DOR
XTO	7	22	VDD
VSS1	8	21	VSS2
CKO	9	20	DGL
MS1	10	19	DGR
MS2	11	18	FSEL2
MS3	12	17	FSEL1
MDT	13	16	DIEM
/MEN	14	15	MUTE

CIRCUIT DESCRIPTION

2-3. Pin function

Pin No.	Pin name	I/O	Remarks
1	DIN	I	Input data pin.
2	BCKI	I	Input data. Bit clock pin (read data at positive going).
3	/CKSL	I	System clock selection pin. Refer to pin #6.
4	/CKDV	I	System clock selection pin. Refer to pin #6.
5	/8X	I	Output sample rate selector. H=4fs, L=8fs.
6	XTI	I	Oscillation selector. 192fs : /CKSL="H" & /CKDV="H", 384fs : /CKSL="H" & /CKDV="L" 256fs : /CKSL="L" & /CKDV="H", 512fs : /CKSL="L" & /CKDV="L".
7	XTO	O	Oscillation output pin.
8	Vss1	–	GND 1.
9	CKO	O	Output clock. Frequency is #6 pin.
10~12	MS1~MS3	I	Mode setting control. Fix digital attenuator and mode flag registor.
13	MDT	I	Mode setting data.
14	/MEN	I	Mode setting enable.
15	MUTE	I	Mute signal. H=mute on.
16	DIEM	I	De-emphasis control signal. H=de-emphasis on.
17, 18	FSEL1, FSEL2	I	De-emphasis filter selector (fs).
19	DGR	O	8fs parallel output mode : degrich negative output. 4fs alternative output mode : R-ch degrich output. 4fs parallel output mode : degrich negative output.
20	DGL	O	8fs parallel output mode : degrich negative output. 4fs alternative output mode : L-ch degrich output. 4fs parallel output mode : degrich negative output.
21	Vss2	–	GND 2.
22	VDD	–	Power supply (5V).
23	DOR	O	8fs parallel output mode : R-ch data output. 4fs alternative output mode : LR clock output. 4fs parallel output mode : R-ch data output.
24	DOL	O	8fs parallel output mode : L-ch data output. 4fs alternative output mode : L-ch/R-ch data output. 4fs parallel output mode : L-ch data output.
25	WCKO	O	Output word clock.
26	BCKO	O	Output bit clock.
27	FSCO	O	Output timing clock and fs cycle calculator.
28	LRCI	I	Sample rate (fs) clock of input data.

	32kHz	44.1kHz	48kHz
FSEL1	H	L	L
FSEL2	H	L	H

CIRCUIT DESCRIPTION

3. Test Mode

3-1. Setting the test mode

This microprocessor built in this unit (X32- B/5) can be put to TEST MODE by just short-circuiting the test pins (#3 and #4).

3-2. Key and functions valid in test mode

No.	Input key	Function	Track No. display
1	PLAY / PAUSE (▶/II)	(1) Focusing servo ..... ON (2) Tracking servo ..... ON (3) Feed servo ..... ON	TRACK NO. 05 ↓ Displayed for a few seconds after completion (1), (2) and (3). ↓ Q-data are displayed and playback.
2	DISPLAY MODE	(1) Focusing servo ..... ON (2) Tracking servo ..... OFF (3) Feed servo ..... OFF	TRACK NO. 03
3	STOP (■)	(1) Focusing servo ..... OFF (2) Tracking servo ..... OFF (3) Feed servo ..... OFF	TRACK NO. 01
4	UP (▶▶I)	Turns all FL display lamps ON.	TRACK NO. 88
5	DOWN (I◀◀)	Turns all FL display lamps OFF. "TRACK NO." is lighted.	TRACK NO. 88
6	P.MODE	Track No.7 and 8 are programmed and playback starts.	–
7	OPEN / CLOSE (▲)	Track No.7 and 8 are programmed and tray opens.	–
8	FF (▶▶)	In the STOP mode, moves the pickup toward the outer position of disc.	TRACK NO. 01
9	FB (◀◀)	In the STOP mode, moves the pickup toward the inner position of disc.	TRACK NO. 01

Note : Initialized mode is available of pulling AC power cord after checking TEST MODE.

ADJUSTMENT

CAUTION: L-D1 has a new loading system. When connecting pin 5(CLSSW) of CN1(X29-) to GND, you are available for playback without lid.
Also label some tape on the sensor of clamper detection(checking contact of clamper and disk) if laser power check.

No.	ITEM	INPUT SETTING	OUTPUT SETTING	PLAYER SETTING	ALIGNMENT POINT	ALIGN FOR	FIG
1	LASER POWER	–	Set the sesor section of the optical power meter on the pickup lens.	Short-circuit pins TEST and turn the power on to enter the test mode. Press the "DISPLAY" key to check that the display is "03".	-	On the power from 0.1 to 0.3mW, when the diffraction grating is correctly aligned with the RF level of 1.0Vp-p or more	(a)
2	TRACKING ERROR	Test disc KTD-01	Connect an oscilloscope as follows. CH1: RF (CN2-1) CH2: TE (CN2)	Press the "DISPLAY" key. Confirm that the display is "03".	TE BALANCE VR4	Symmetry between upper and lower for VC(2.5V) or DC=0±0.05V	(b)
3	FOCUS ERROR	Test disc KTD-01	Connect an oscilloscope as follows. CH1: RF(CN2-1) CH2: TE(CN2)	Press the "PLAY" key. Confirm that the display is" 05 ".	FE BALANCE VR3	Optimum eye pattern	(c)
4	FOCUS GAIN	Test disc KTD-01 Apply signal of 1.0kHz,100mVrms to CN2 pin FEI-FE.	Connect a LPF to CN2 pin FEI-FE to which connect an oscilloscope or AC voltmeters.	Press the "PLAY" key. Confirm that the display is" 05 ".	FOCUS GAIN VR1	Two VTVMs should read the same value.	(d)
5	TRACKING GAIN	Test disc KTD-01 Apply signal of 1.0kHz,100mVrms to CN2 pin TEI-TE.	Connect a LPF to CN2 pin TEI-TE to which connect an oscilloscope or AC voltmeters.	Press the "PLAY" key. Confirm that the display is" 05 "	TRACKING GAIN VR2	Two VTVMs should read the same value.	(d)
6	DC OFFSET (TRACKING DRIVER)	–	Connect an oscilloscope or DC voltmeter to output of tacking driver.	STOP	TRACKING DC OFFSET VR5	DC=0±0.05V	(e)
7	BIAS CURRENT	–	Connect an DC voltmeter to pin 3 and 4 or Pin 6 and 7.	STOP	BIAS VR101.102	14mV	(e)

(Note) Test disc: SONY YDS-18 Test Disc ,KENWOOD KTD-01 or equivalent.
LPF: Around 47kohms+390pF or so.
Step 1~5 are in Test Mode.

L-D1

(a) LASER POWER

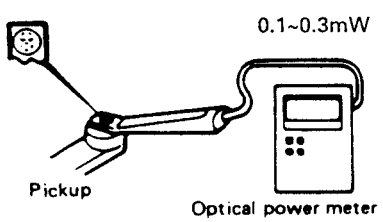

(d) FOCUS GAIN, TRACKING GAIN

FOCUS GAIN :

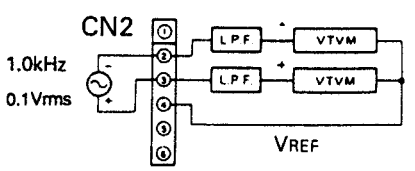

TRACKING GAIN :

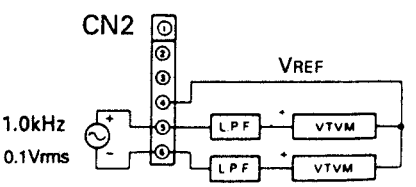

ADJUSTMENT

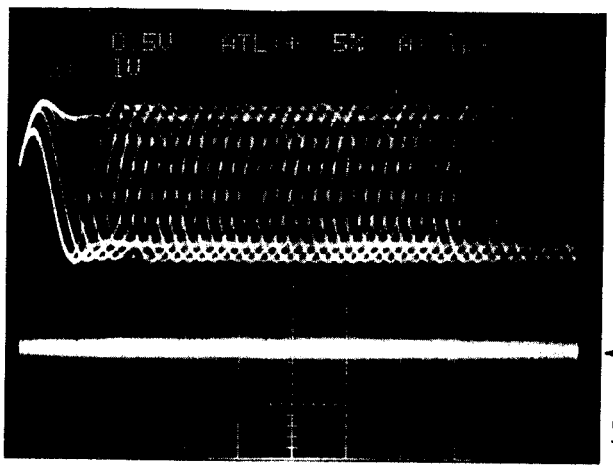

CH1
RF signal
: AC coupled

0(V)

CH2
TE signal
: DC coupled

- RF signal and E.Spot signal in test mode (PLAY).

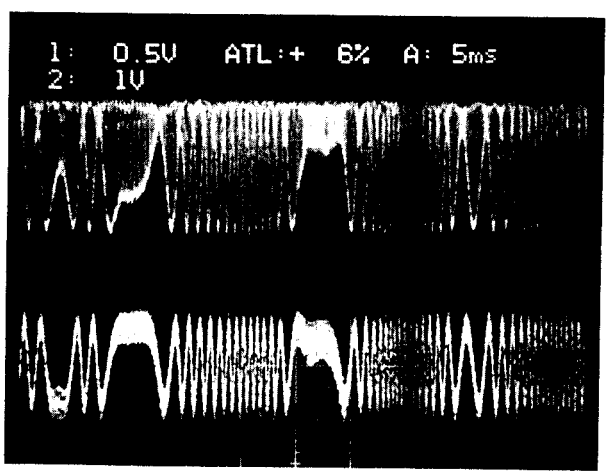

CH1
RF signal

0(V)

CH2
TE signal
: DC coupled

- RF signal and T.Error signal; in test mode (Focusing ON). (Disc type 4)
- Adjust T.Error so that the waveform is symmetrical above andbelow 0V. (VR4)

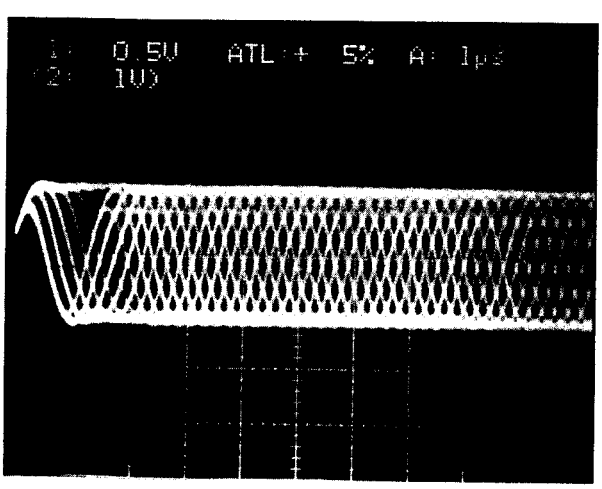

RF signal
: AC coupled

- RF signal in test mode (PLAY).
- Perform the tangential and focusing offset adjustments so that each of the center cross points are focused into one pointon the display. The crossing points above and below the center shall also be displayed clearly. (VR3)

WIRING DIAGRAM

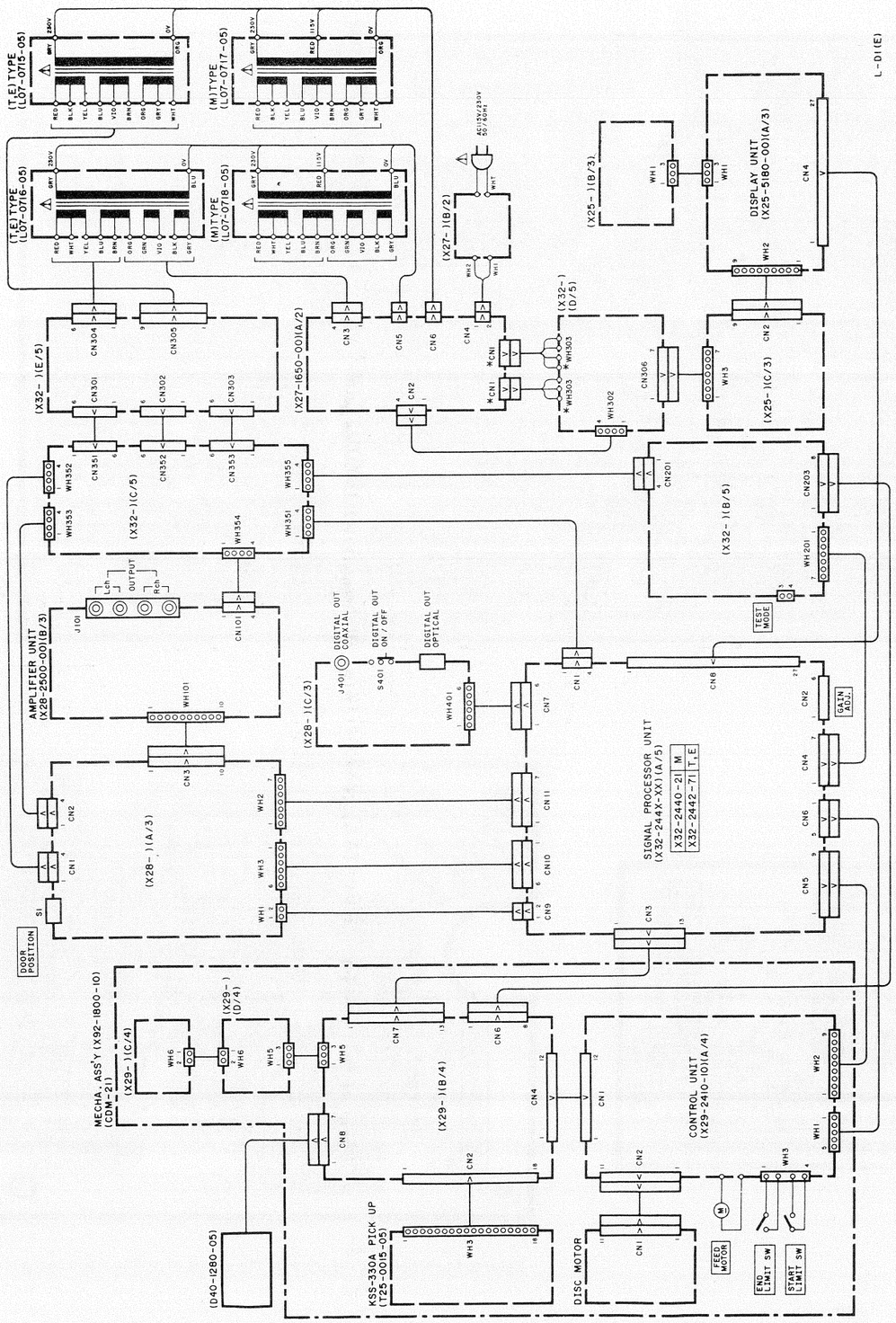

PC BOARD (COMPONENT SIDE VIEW)

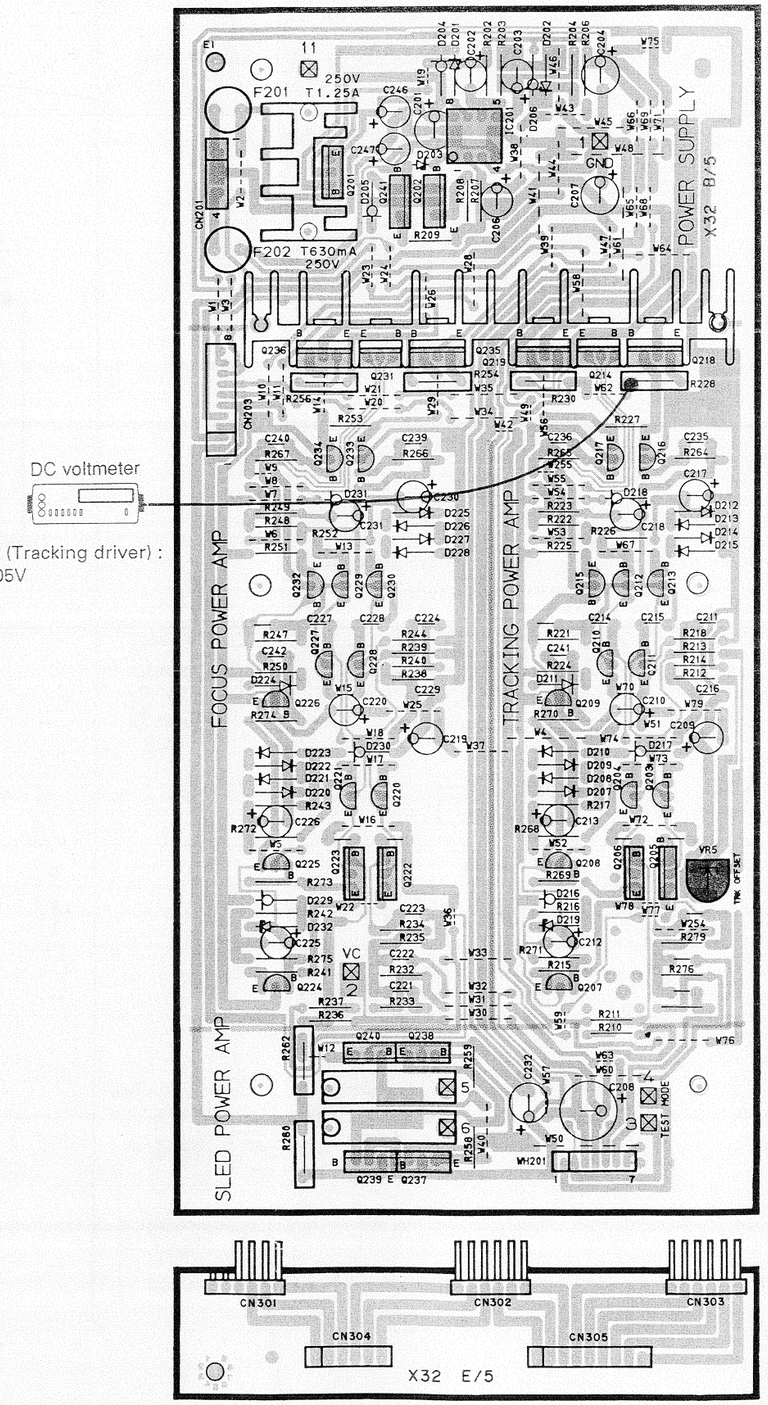

Refer to the schematic diagram for the values of resistors and capacitors.

PC BOARD (COMPONENT SIDE VIEW)

(b) Tracking error balance :
Symmetry between upper and lower for VC (2.5V) or DC=0±0.05V

(c) Focus error balance :
Optimum eye pattern

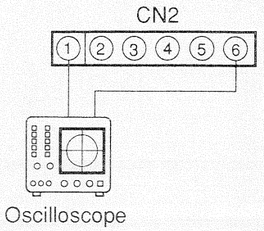

(d) Focus gain :
Two VTVMs should read the same value.

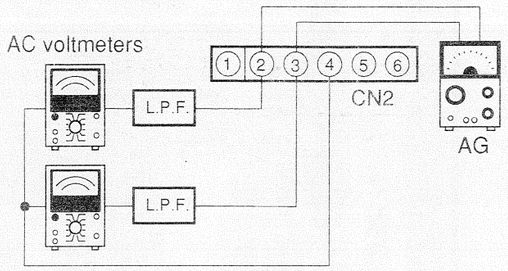

(d) Tracking gain :
Two VTVMs should read the same value.

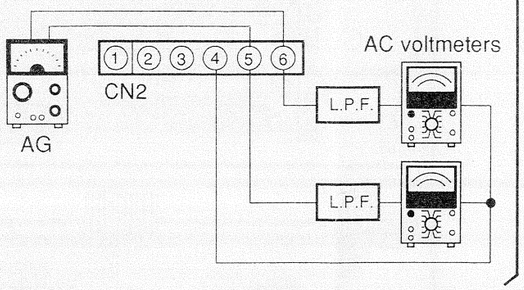

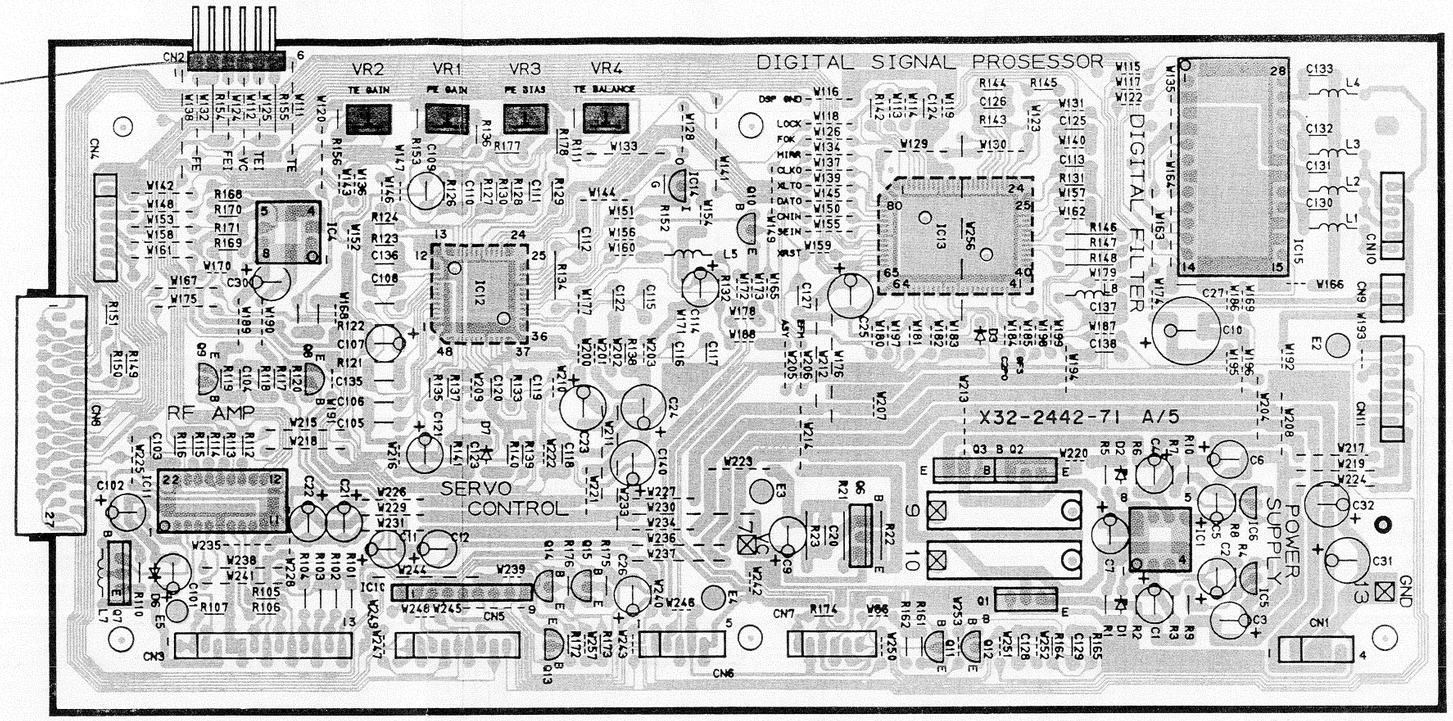

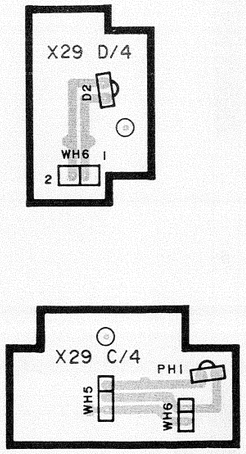

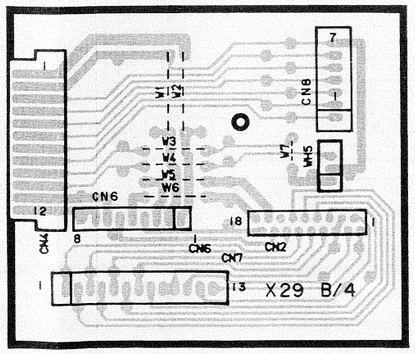

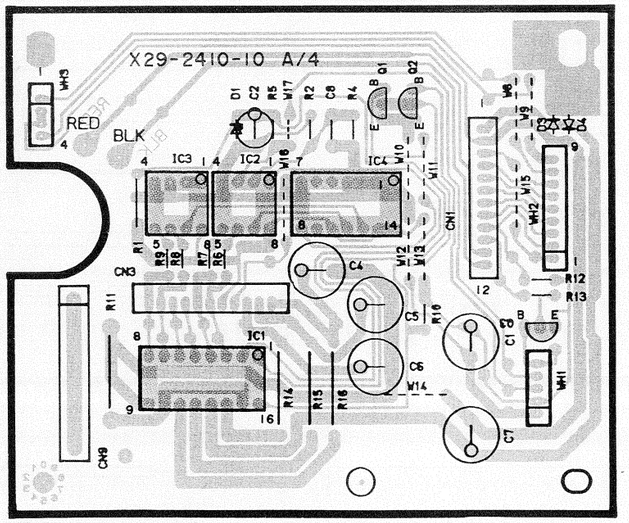

Refer to the schematic diagram for the values of resistors and capacitors.

PC BOARD (COMPONENT SIDE VIEW)

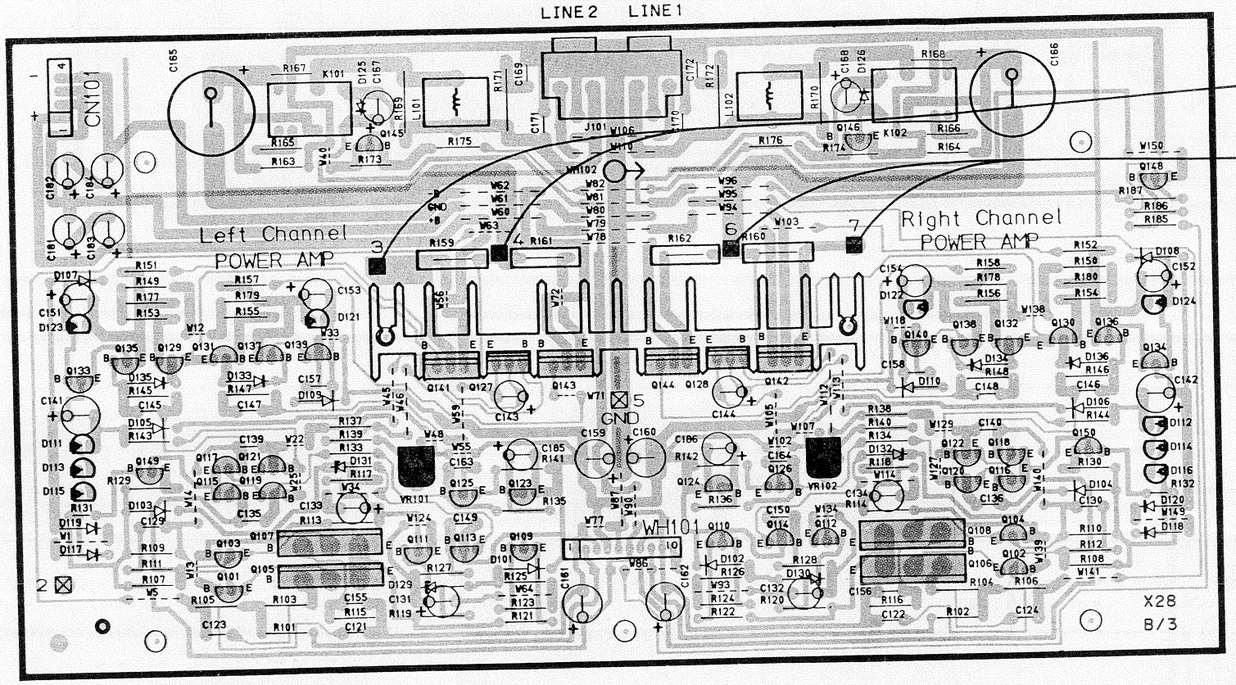

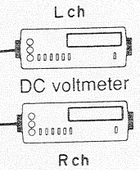

(e) Bias current : 14mV

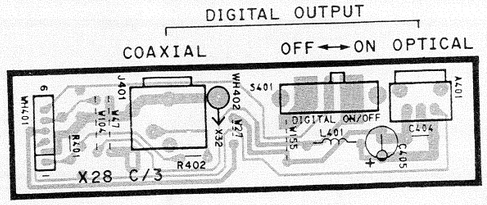

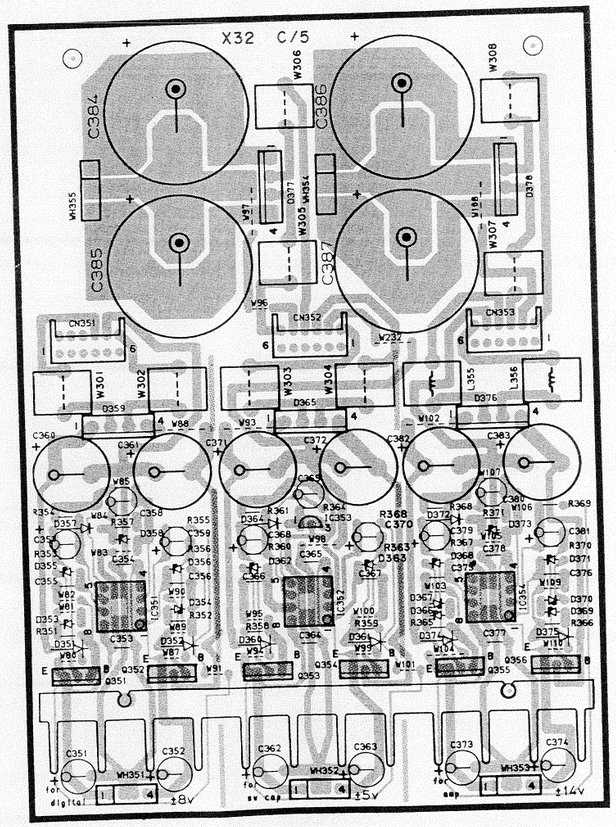

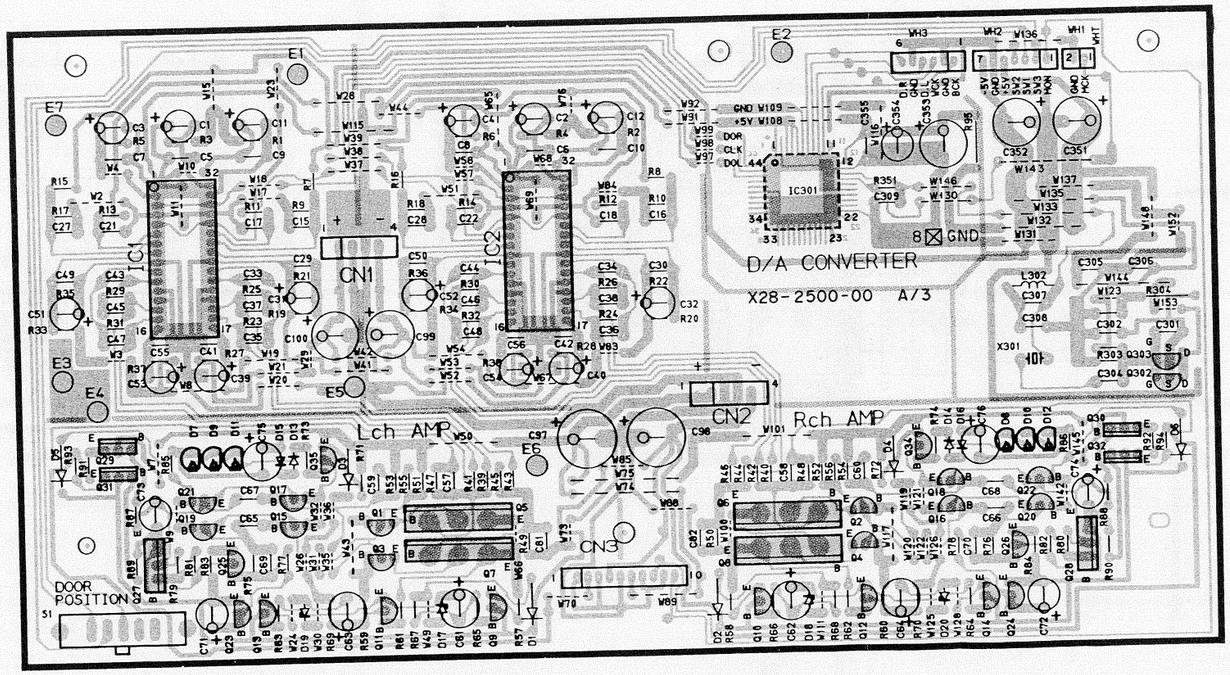

Refer to the schematic diagram for the values of resistors and capacitors.

PC BOARD (COMPONENT SIDE VIEW)

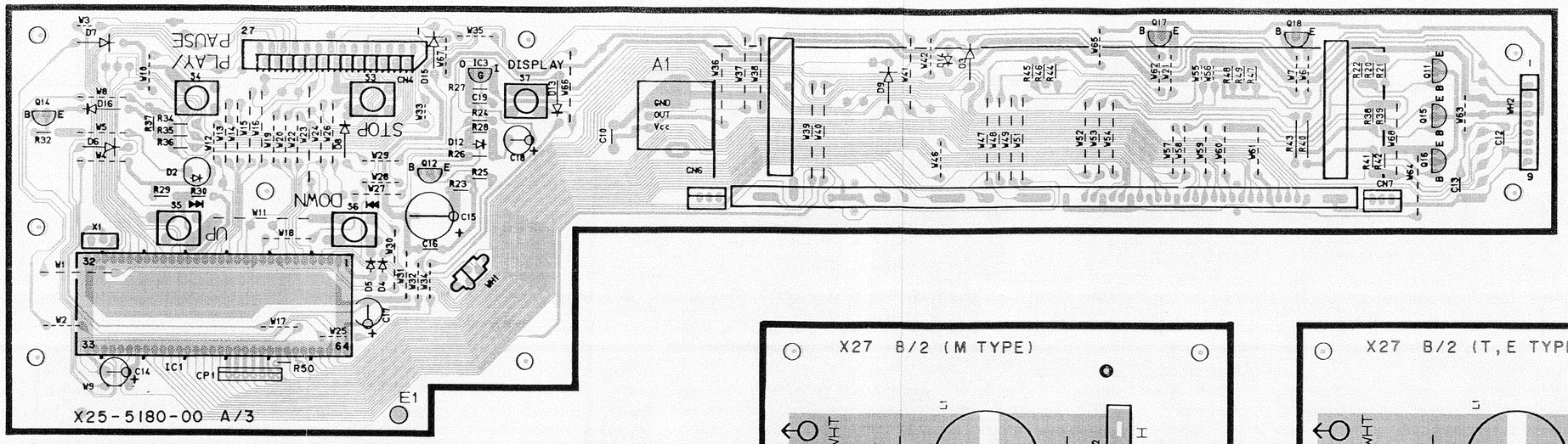

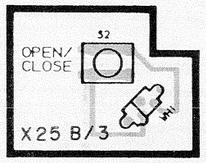

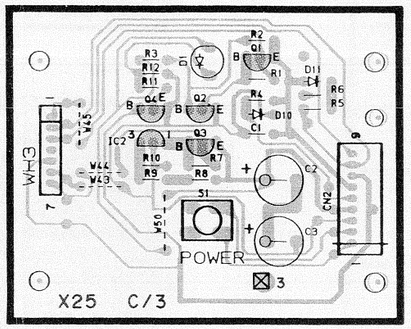

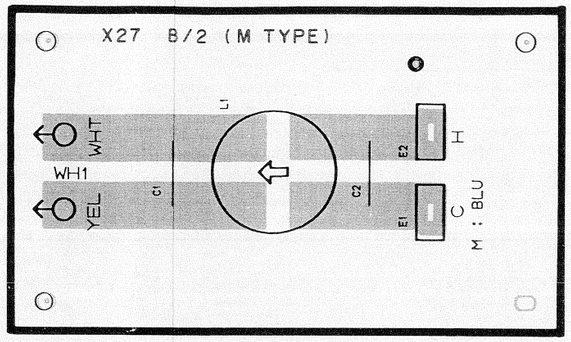

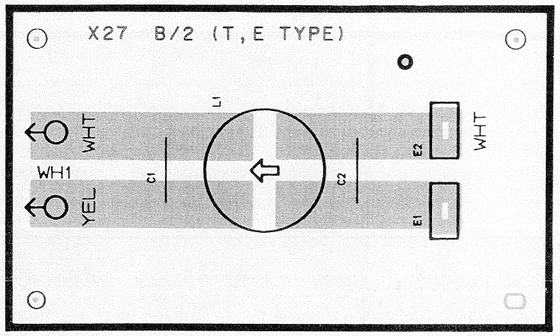

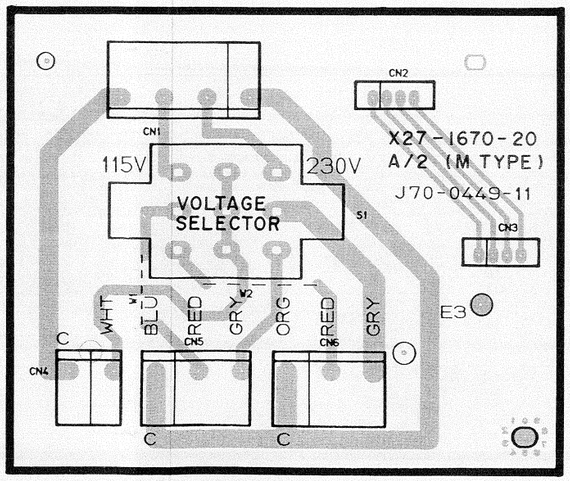

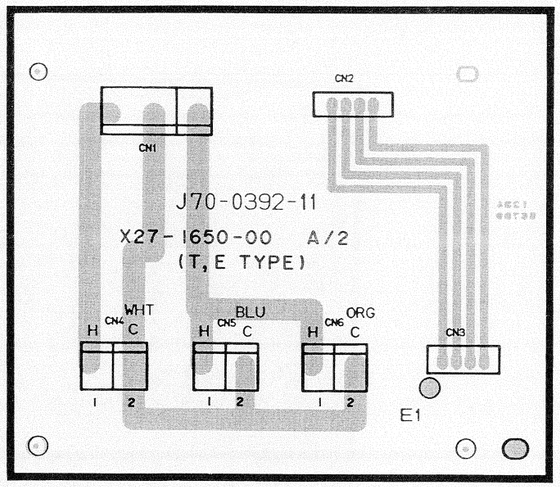

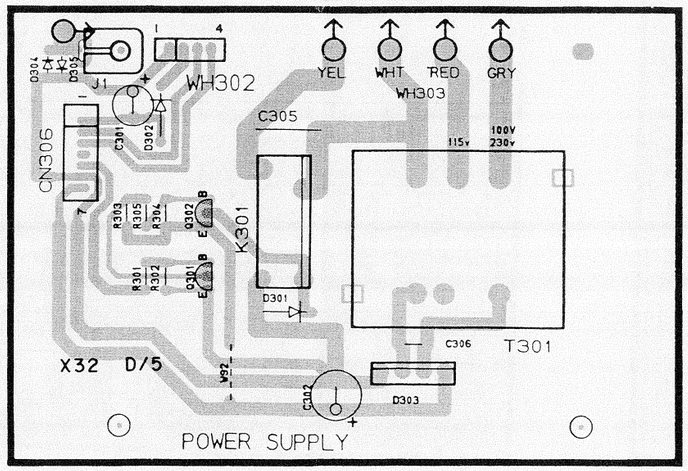

Refer to the schematic diagram for the values of resistors and capacitors.

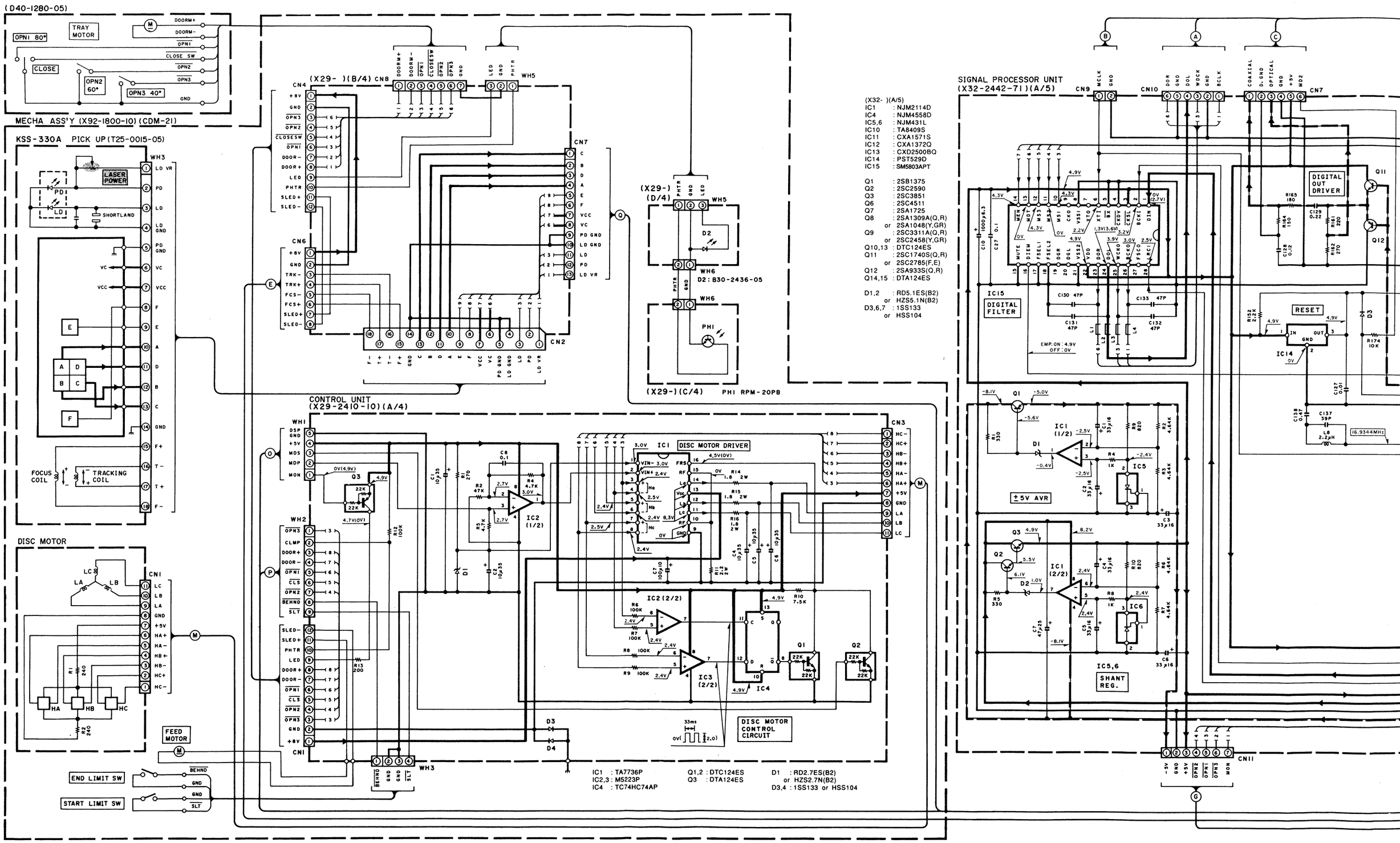

• DC voltages ar
or/and units.

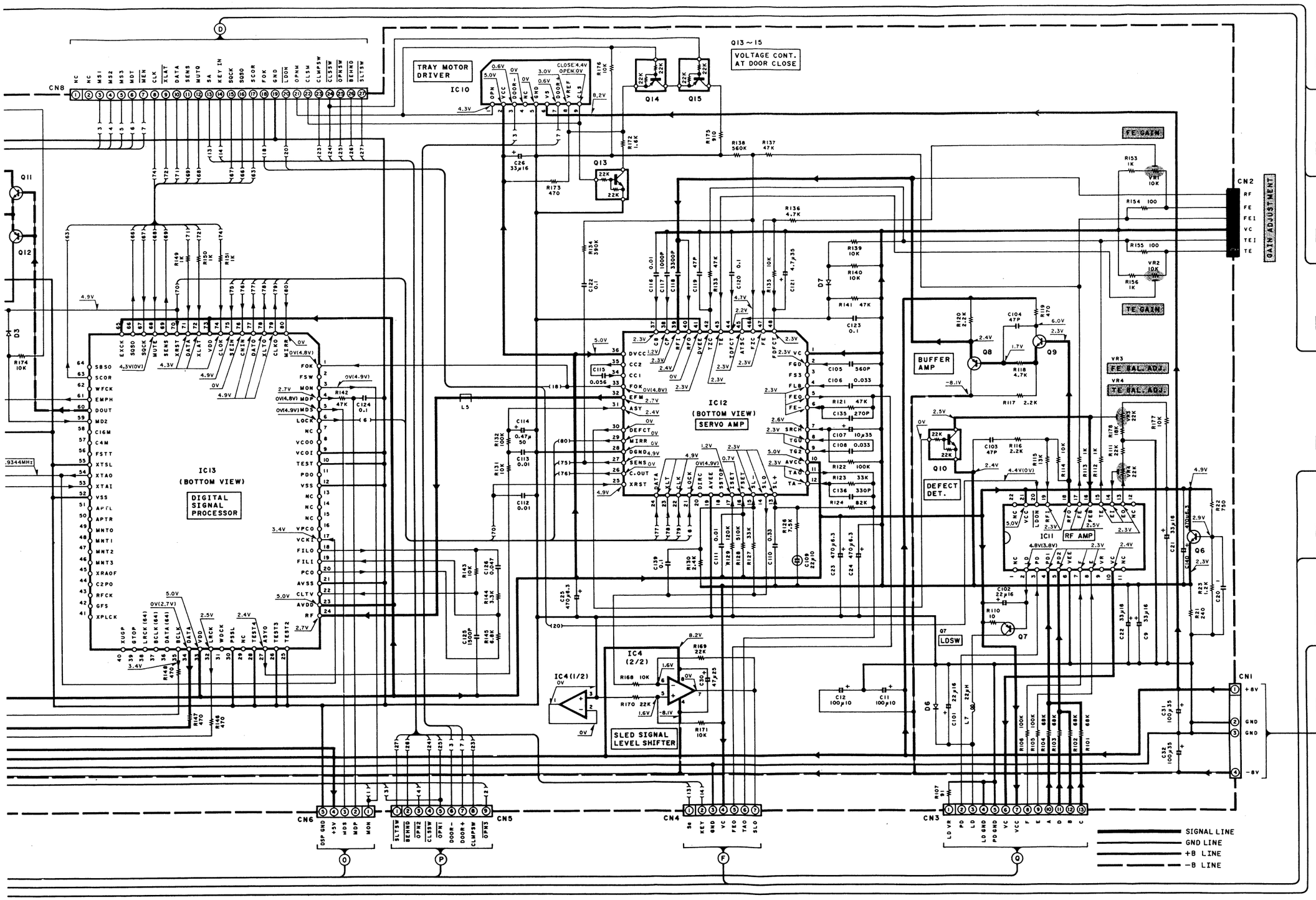

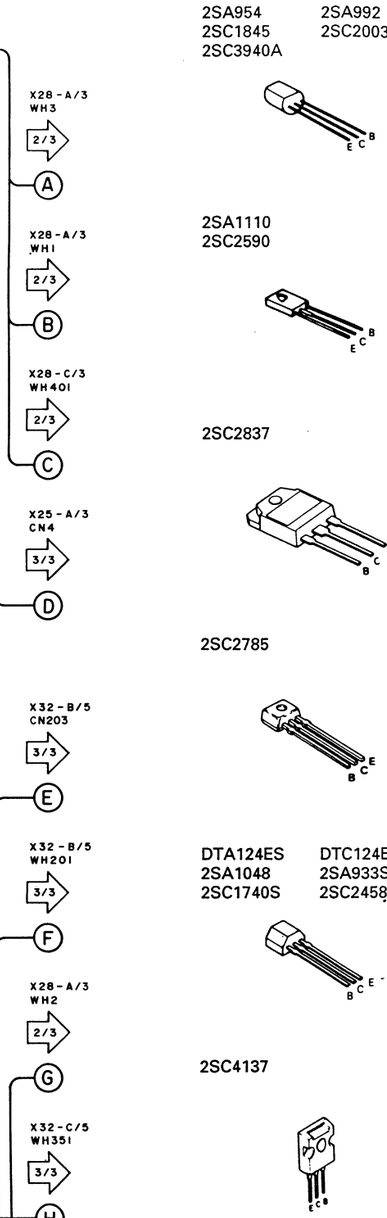

L-D1(E)(1/3)

Y22-3130-21

L-D

KENWO

Voltages are as measured with a high impedance voltmeter. Values may vary slightly due to variations between individual instruments and units.

CAUTION : For continued safety, replace safety critical components only with manufacturer's recommended parts (refer to parts list). ⚠ Indicates safety critical components. To reduce the risk of electric shock, leakage-current or resistance measurements shall be carried out (exposed parts are acceptably insulated from the supply circuit) before the appliance is returned to the customer.

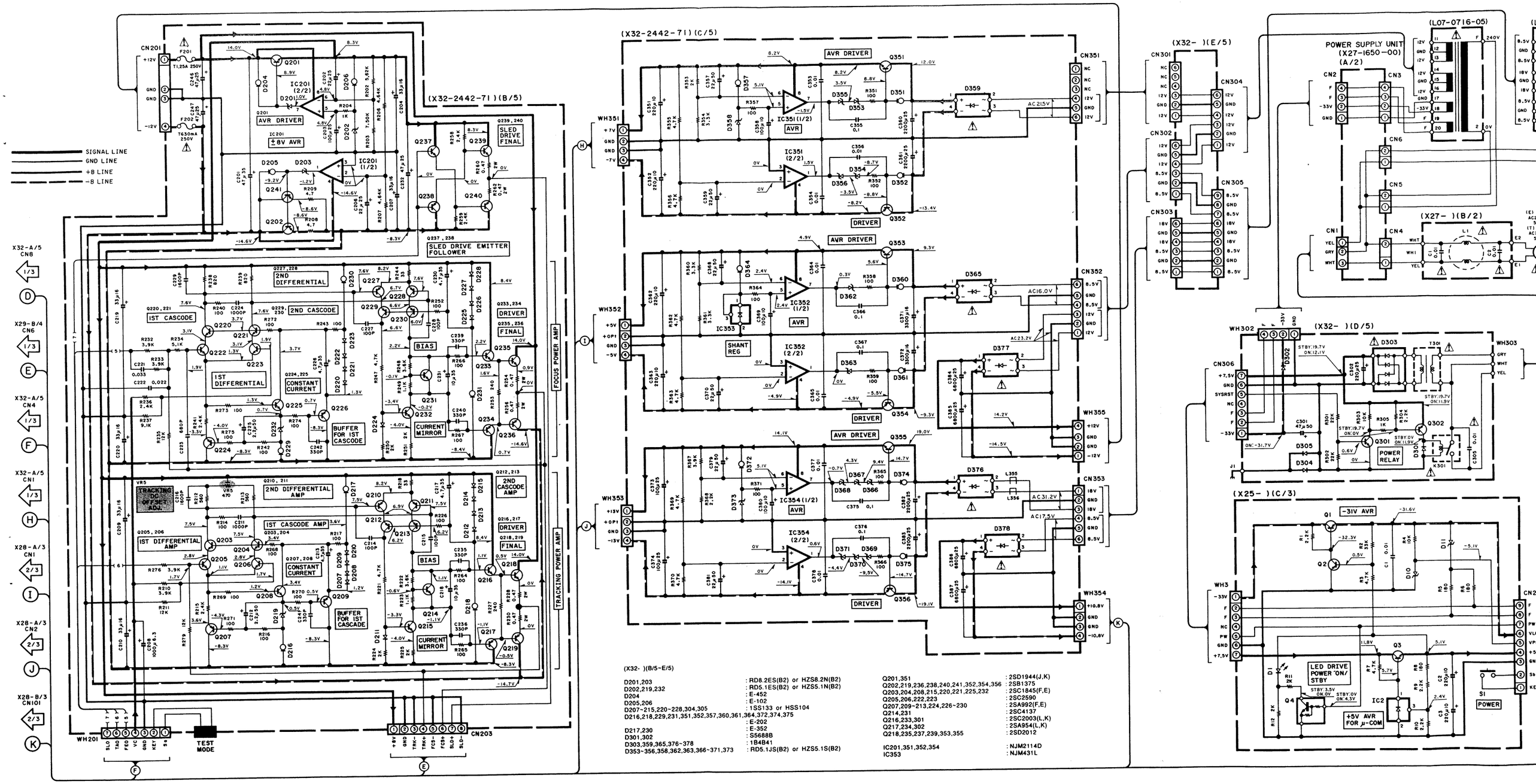

(X32-)(B/5~E/5)

D201,203	: RD8.2ES(B2) or HZS8.2N(B2)
D202,219,232	: RD5.1ES(B2) or HZS5.1N(B2)
D204	: E-452
D205,206	: E-102
D207~215,220~228,304,305	: 1SS133 or HSS104
D216,218,229,231,351,352,357,360,361,364,372,374,375	: E-202
D217,230	: E-352
D301,302	: S5688B
D303,359,365,376~378	: 1B4B41
D353~356,358,362,363,366~371,373	: RD5.1JS(B2) or HZS5.1S(B2)
Q201,351	: 2SD1944(J,K)
Q202,219,236,238,240,241,352,354,356	: 2SB1375
Q203,204,208,215,220,221,225,232	: 2SC1845(F,E)
Q205,206,222,223	: 2SC2590
Q207,209~213,224,226~230	: 2SA992(F,E)
Q214,231	: 2SC4137
Q216,233,301	: 2SC2003(L,K)
Q217,234,302	: 2SA954(L,K)
Q218,235,237,239,353,355	: 2SD2012
IC201,351,352,354	: NJM2114D
IC353	: NJM431L

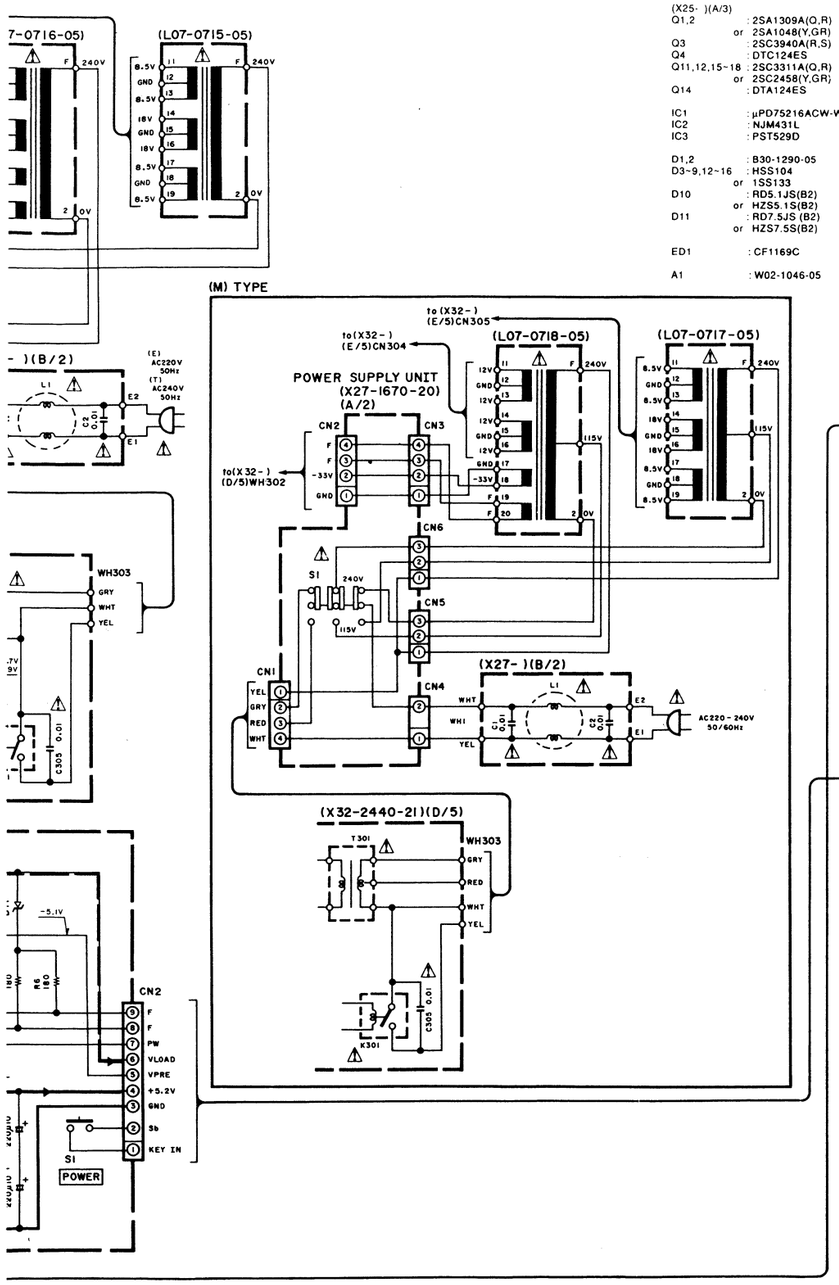

(X25-)(A/3)

Q1,2	: 2SA1309A(O,R) or 2SA1048(Y,GR)
Q3	: 2SC3940A(R,S)
Q4	: DTC124ES
Q11,12,15~18	: 2SC3311A(O,R) or 2SC2458(Y,GR)
Q14	: DTA124ES
IC1	: μPD75216ACW-W36
IC2	: NJM431L
IC3	: PST529D
D1,2	: B30-1290-05
D3~9,12~16	: HSS104 or 1SS133
D10	: RD5.1JS(B2) or HZS5.1S(B2)
D11	: RD7.5JS (B2) or HZS7.5S(B2)
ED1	: CF1169C
A1	: W02-1046-05

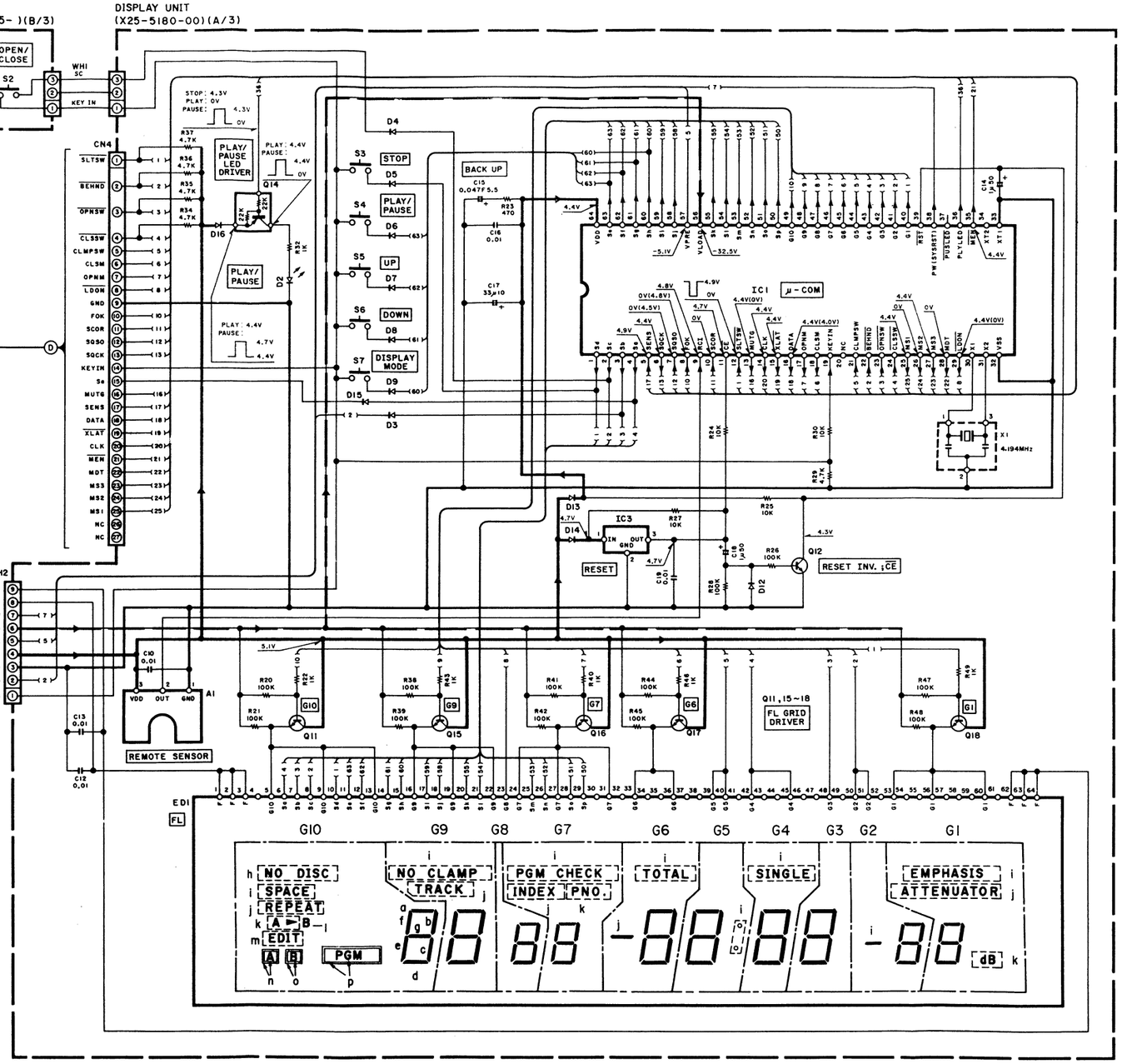

L-DI(E)(3/3)

CXD2500BQ

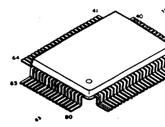

CXA1372Q

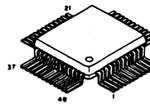

SAA7350

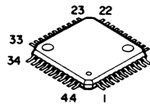

UPD75216ACW-W36

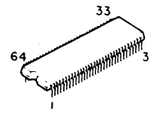

TDA1547

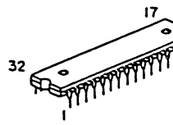

NJM431L

- DC voltages are as measured with a high impedance voltmeter. Values may vary slightly due to variations between individual instruments or/and units.

CAUTION : For continued safety, replace safety critical components only with manufacturer's recommended parts (refer to parts list). ⚠ Indicates safety critical components. To reduce the risk of electric shock, leakage-current or resistance measurements shall be carried out (exposed parts are acceptably insulated from the supply circuit) before the appliance is returned to the customer.

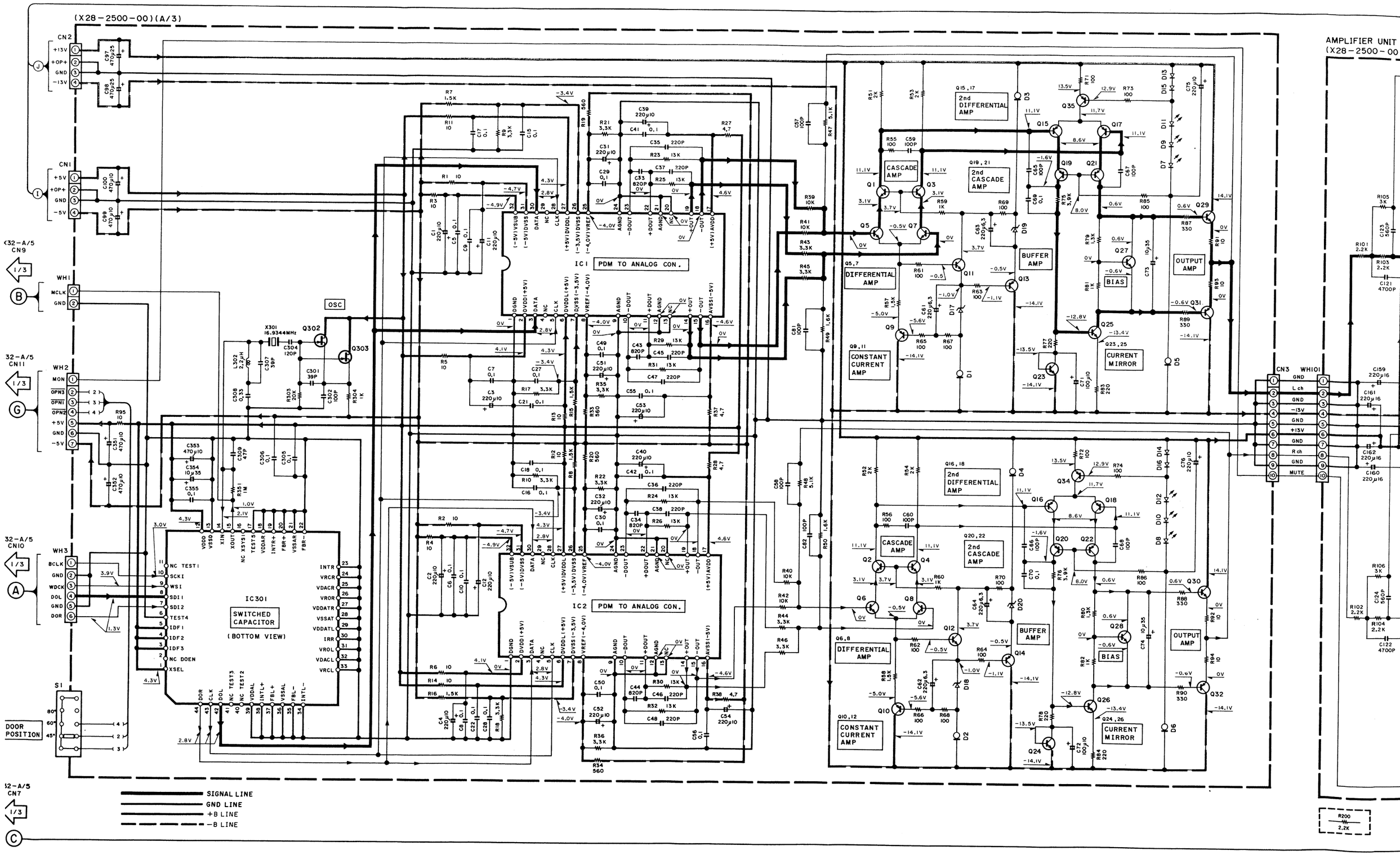
(X28-2500-00)(A/3)
AMPLIFIER UNIT
(X28-2500-00
CN2
CN1
CN9
CN11
CN10
CN7
CN3
WH1
WH2
WH3
WH101
S1
DOOR POSITION
OSC
IC1
PDM TO ANALOG CON.
IC2
PDM TO ANALOG CON.
IC301
SWITCHED CAPACITOR
(BOTTOM VIEW)
2nd DIFFERENTIAL AMP
CASCADE AMP
2nd CASCADE AMP
DIFFERENTIAL AMP
BUFFER AMP
OUTPUT AMP
BIAS
CURRENT MIRROR
CONSTANT CURRENT AMP
SIGNAL LINE
GND LINE
+B LINE
-B LINE

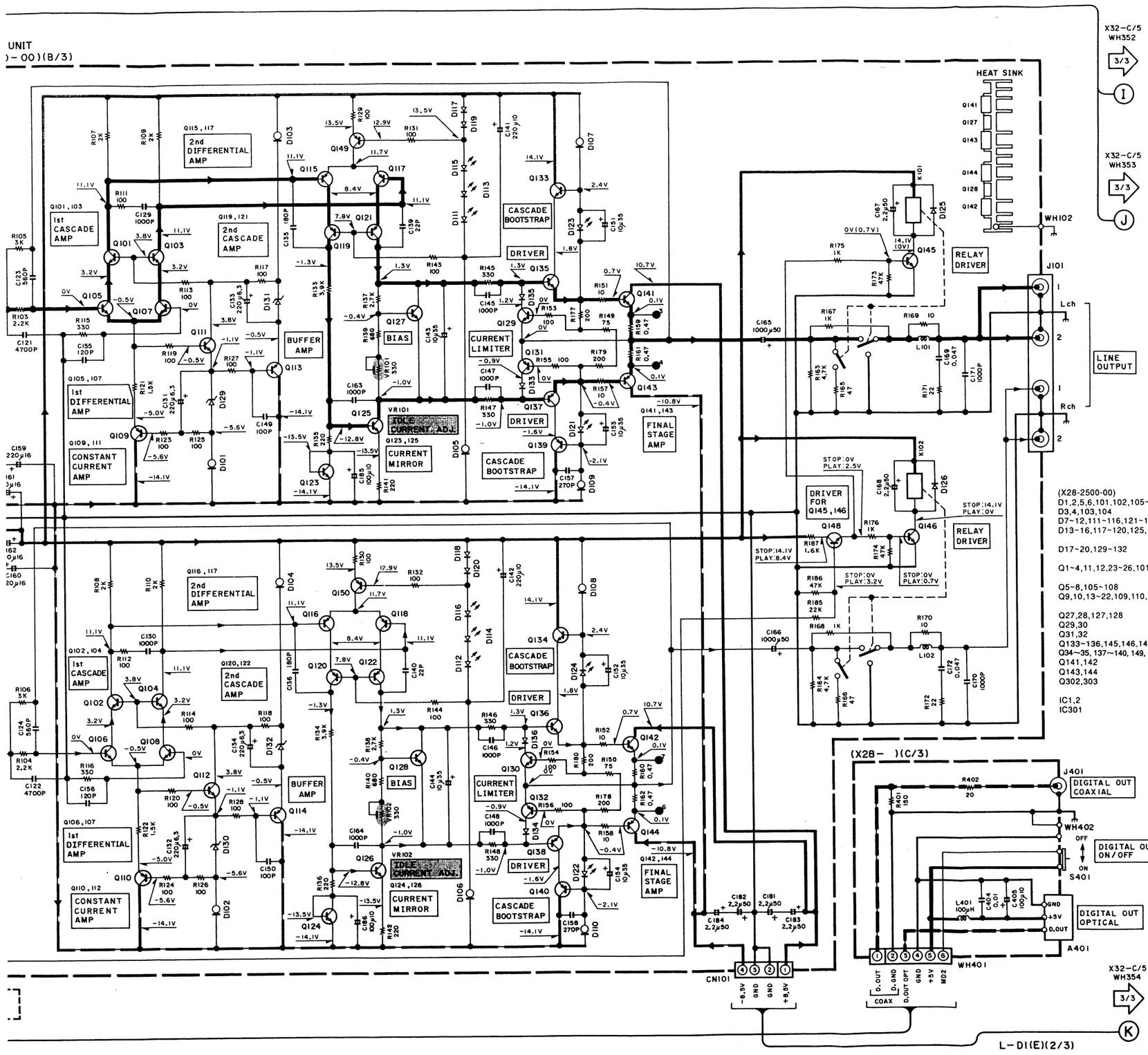

2SD1944

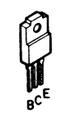

TA8409S

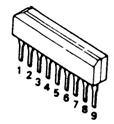

2SA1309A
2SC3311A

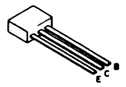

M5223P

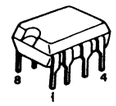

2SB1375
2SC3851
2SD2012

PST529D

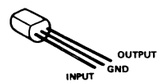

NJM2114D
NJM4558D

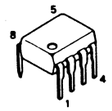

2SK161

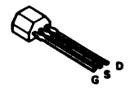

TC74HC74AP

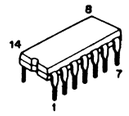

SM5803APT

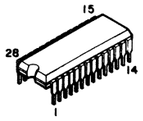

TA7736P

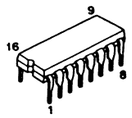

CXA1571S

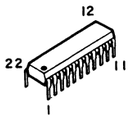

- DC voltages are as measured with a high impedance voltmeter. Values may vary slightly due to variations between individual instruments or/and units.

CAUTION: For continued safety, replace safety critical components only with manufacturer's recommended parts (refer to parts list). ⚠ Indicates safety critical components. To reduce the risk of electric shock, leakage-current or resistance measurements shall be carried out (exposed parts are acceptably insulated from the supply circuit) before the appliance is returned to the customer.

L-D1

KENWOOD

L-D1 PARTS LIST

✱ New Parts
Parts without **Parts No.** are not supplied.
Les articles non mentionnes dans le **Parts No.** ne sont pas fournis.
Teile ohne **Parts No.** werden nicht geliefert.

❸

Ref. No. 参照番号	Address 位置	New Parts 新	Parts No. 部品番号	Description 部品名／規格	Destination 仕向	Remarks 備考
Q1 ,2			2SA1048(Y,GR)	TRANSISTOR		
Q1 ,2			2SA1309A(Q,R)	TRANSISTOR		
Q3			2SC3940A(R,S)	TRANSISTOR		
Q4			DTC124ES	DIGITAL TRANSISTOR		
Q11 ,12			2SC2458(Y,GR)	TRANSISTOR		
Q11 ,12			2SC3311A(Q,R)	TRANSISTOR		
Q14			DTA124ES	DIGITAL TRANSISTOR		
Q15 -18			2SC2458(Y,GR)	TRANSISTOR		
Q15 -18			2SC3311A(Q,R)	TRANSISTOR		
A1	3D		W02-1046-05	ELECTRIC CIRCUIT MODULE		
POWER SUPPLY (X27-1650-00)						
⚠ C1 ,2			C91-1439-05	FILM 0.01UF 250VAC	TE	
-			J11-0098-05	WIRE CLAMPER	TE	
⚠ L1			L79-0733-05	LINE FILTER	TE	
POWER SUPPLY (X27-1670-20)						
⚠ C1 ,2			C91-1439-05	FILM 0.01UF 250VAC	M	
-			J11-0098-05	WIRE CLAMPER	M	
⚠ L1			L79-0733-05	LINE FILTER	M	
⚠ S1			S31-3010-05	SLIDE SWITCH	M	
AMP (X28-2500-00)						
D7 -12			B30-1012-05	LED(SLP-981C-51)		
D111-116			B30-1012-05	LED(SLP-981C-51)		
D121-124			B30-1012-05	LED(SLP-981C-51)		
C1 -4			CE04KW1A221M	ELECTRO 220UF 10WV		
C5 -10			CF92FV1H104J	MF 0.10UF J		
C11 ,12			CE04KW1A221M	ELECTRO 220UF 10WV		
C15 -18			CF92FV1H104J	MF 0.10UF J		
C21 ,22			CF92FV1H104J	MF 0.10UF J		
C27 -30			CF92FV1H104J	MF 0.10UF J		
C31 ,32			CE04KW1A221M	ELECTRO 220UF 10WV		
C33 ,34			CF92FV1H821J	MF 820PF J		
C35 -38			CF92FV1H221K	MF 220PF K		
C39 ,40			CE04KW1A221M	ELECTRO 220UF 10WV		
C41 ,42			CF92FV1H104J	MF 0.10UF J		
C43 ,44			CF92FV1H821J	MF 820PF J		
C45 -48			CF92FV1H221K	MF 220PF K		
C49 ,50			CF92FV1H104J	MF 0.10UF J		
C51 -54			CE04KW1A221M	ELECTRO 220UF 10WV		
C55 ,56			CF92FV1H104J	MF 0.10UF J		
C57 -60			CF92FV1H101K	MF 100PF K		
C61 -64			CE04KW0J221M	ELECTRO 220UF 6.3WV		
C65 -68			CF92FV1H101K	MF 100PF K		
C69 ,70			CF92FV1H104J	MF 0.10UF J		
C71 ,72			CE04KW1A101M	ELECTRO 100UF 10WV		
C73 ,74			CE04KW1V100M	ELECTRO 10UF 35WV		
C75 ,76			CE04KW1A221M	ELECTRO 220UF 10WV		
C81 ,82			CF92FV1H101K	MF 100PF K		
C97 ,98			CE04KW1E471M	ELECTRO 470UF 25WV		
C99 ,100			CE04KW1A471M	ELECTRO 470UF 10WV		

L:Scandinavia K:USA P:Canada
Y:PX(Far East, Hawaii) T:England E:Europe
Y:AAFES(Europe) X:Australia M:Other Areas

⚠ indicates safety critical components.

✱ New Parts
Parts without **Parts No.** are not supplied.
Les articles non mentionnes dans le **Parts No.** ne sont pas fournis.
Teile ohne **Parts No.** werden nicht geliefert.

❹

Ref. No. 参照番号	Address 位置	New Parts 新	Parts No. 部品番号	Description 部品名／規格	Destination 仕向	Remarks 備考
C121,122			CF92FV1H472J	MF 4700PF J		
C123,124			CF92FV1H561J	MF 560PF J		
C129,130			CF92FV1H102J	MF 1000PF J		
C131-134			CE04KW0J221M	ELECTRO 220UF 6.3WV		
C135,136			CF92FV1H181K	MF 180PF K		
C139,140			CC45FSL1H220J	CERAMIC 22PF J		
C141,142			CE04KW1A221M	ELECTRO 220UF 10WV		
C143,144			CE04KW1V100M	ELECTRO 10UF 35WV		
C145-148			CF92FV1H102J	MF 1000PF J		
C149,150			CF92FV1H101K	MF 100PF K		
C151-154			CE04KW1V100M	ELECTRO 10UF 35WV		
C155,156			CF92FV1H121K	MF 120PF K		
C157,158			CF92FV1H271K	MF 270PF K		
C159-162			CE04KW1C221M	ELECTRO 220UF 16WV		
C163,164			CF92FV1H102J	MF 1000PF J		
C165,166			CE04KW1H102M	ELECTRO 1000UF 50WV		
C167,168			CE04KW1H2R2M	ELECTRO 2.2UF 50WV		
C169			CF92FV1H473J	MF 0.047UF J		
C170,171			CF92FV1H102J	MF 1000PF J		
C172			CF92FV1H473J	MF 0.047UF J		
C181-184			CE04KW1H2R2M	ELECTRO 2.2UF 50WV		
C185,186			CE04KW1A101M	ELECTRO 100UF 10WV		
C301			C91-1469-05	FILM 39PF K		
C302			CF92FV1H101K	MF 100PF K		
C304			CF92FV1H121K	MF 120PF K		
C305,306			CF92FV1H104J	MF 0.10UF J		
C307			C91-1469-05	FILM 39PF K		
C308			CF92FV1H334J	MF 0.33UF J		
C309			C91-1470-05	FILM 47PF K		
C351-353			CE04KW1A471M	ELECTRO 470UF 10WV		
C354			CE04KW1V100M	ELECTRO 10UF 35WV		
C355			CF92FV1H104J	MF 0.10UF J		
C404			CF92FV1H103J	MF 0.010UF J		
C405			CE04KW1A101M	ELECTRO 100UF 10WV		
J101	1I		E63-0082-05	PHONO JACK (OUTPUT)		
J401	1I	*	E63-0080-05	PHONO JACK (COAXIAL)		
L101,102			L39-0085-05	PHASE COMPENSATION COIL		
L302			L40-2291-17	SMALL FIXED INDUCTOR		
L401			L40-1011-17	SMALL FIXED INDUCTOR(100UH,K)		
X301			L77-1164-05	CRYSTAL RESONATOR(16.9344MHZ)		
R1 -6			RN14BK2C10R0F	RN 10.0 F 1/6W		
R7 ,8			RN14BK2C1501F	RN 1.50K F 1/6W		
R9 ,10			RN14BK2C3301F	RN 3.30K F 1/6W		
R11 -14			RN14BK2C10R0F	RN 10.0 F 1/6W		
R15 ,16			RN14BK2C1501F	RN 1.50K F 1/6W		
R17 ,18			RN14BK2C3301F	RN 3.30K F 1/6W		
R19 ,20			RN14BK2C5600F	RN 560.0 F 1/6W		
R21 ,22			RN14BK2C3301F	RN 3.30K F 1/6W		
R23 -26			RN14BK2C1302F	RN 13.0K F 1/6W		
R29 -32			RN14BK2C1302F	RN 13.0K F 1/6W		
R33 ,34			RN14BK2C5600F	RN 560.0 F 1/6W		
R35 ,36			RN14BK2C3301F	RN 3.30K F 1/6W		
R39 -42			RN14BK2C1002F	RN 10.0K F 1/6W		
R43 -46			RN14BK2C3301F	RN 3.30K F 1/6W		

L:Scandinavia K:USA P:Canada
Y:PX(Far East, Hawaii) T:England E:Europe
Y:AAFES(Europe) X:Australia M:Other Areas

⚠ indicates safety critical components.

L-D1 L-D1

EXPLODED VIEW (UNIT)

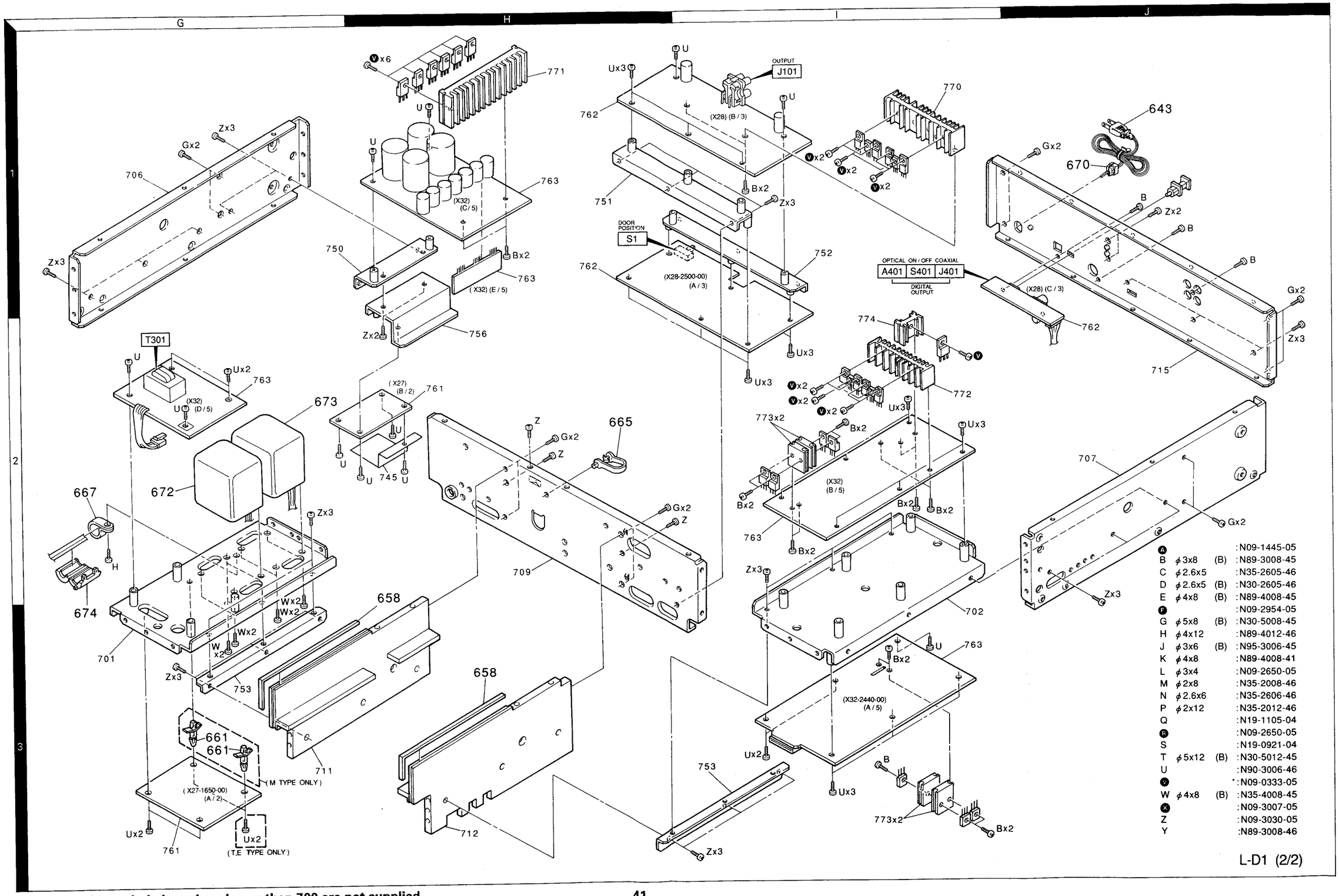

Parts with the exploded numbers larger than 700 are not supplied.

* New Parts
Parts without Parts No. are not supplied.
Les articles non mentionnes dans le Parts No. ne sont pas fournis.
Teile ohne Parts No. werden nicht gellefert.

❶

Ref. No. 参照番号	Address 位置	New Parts 新	Parts No. 部品番号	Description 部品名／規格	Destination 仕向	Remarks 備考
L-D1						
601	1C		A09-0143-08	BATTERY COVER		
603	1D	*	A50-0353-13	SIDE PLATE ASSY (L)		
604	3F	*	A50-0354-13	SIDE PLATE ASSY (R)		
608	2C	*	A52-0160-12	TOP COVER ASSY		
609	1D	*	A52-0162-12	TOP PLATE ASSY (F)		
610	1F	*	A52-0163-22	TOP PLATE ASSY (R)		
611	3C	*	A60-0330-31	PANEL ASSY		
612	3C	*	A60-0331-11	PANEL		
613	1C	*	A70-0916-05	REMOTE CONTROLLER ASSY		
616	3C		B03-2784-14	DRESSING PLATE		
617	3C	*	B03-2808-03	DRESSING PLATE		
618	3C	*	B03-2809-03	DRESSING PLATE		
619	1F		B09-0068-05	CAP		
623	3D	*	B07-2234-03	ESCUTCHEON		
624	3D	*	B07-2241-23	ESCUTCHEON ASSY		
625	3C	*	B07-2242-24	ESCUTCHEON ASSY		
626	3D	*	B10-1951-03	FRONT GLASS ASSY		
628	3C		B12-0212-04	INDICATOR		
-			B46-0122-23	WARRANTY CARD	E	
-			B46-0143-13	WARRANTY CARD	T	
-		*	B60-1244-00	INSTRUCTION MANUAL(ENGLISH)		
630	2D	*	D10-3314-08	ARM (R)		
631	2C	*	D10-3315-08	ARM (L)		
632	2D	*	D10-3316-08	ROD		
633	2D	*	D10-3317-08	SLIDER		
634	2D	*	D13-1528-08	GEAR		
635	2D	*	D13-1529-08	GEAR		
636	2D	*	D13-1530-08	GEAR		
637	2D,2E	*	D13-1531-08	GEAR		
638	2D		D15-0293-08	PULLEY		
639	2D	*	D15-0345-08	PULLEY		
640	2D	*	D16-0339-05	BELT		
641	2C	*	D39-0308-05	DAMPER		
⚠ 642	1C		E19-0207-05	AC PLUG ADAPTER	M	
⚠ 643	1J		E30-2580-05	AC POWER CORD	ME	
⚠ 643	1J		E30-2718-05	AC POWER CORD	T	
644	1C		E30-2600-05	CORD WITH PLUG		
647	3D		E35-0147-05	WIRING HARNESS		
650	2D	*	G01-3513-08	TORSION COIL SPRING		
651	2E	*	G01-3519-08	TORSION COIL SPRING		
658	3H	*	G11-2153-04	SOFT TAPE		
-			G11-0189-04	SOFT TAPE (50X40X2)		
-		*	H10-5425-11	POLYSTYRENE FOAMED FIXTURE		
-		*	H10-5426-11	POLYSTYRENE FOAMED FIXTURE		
-		*	H13-0132-04	CARTON BOARD	T	
-		*	H20-0580-04	PROTECTION COVER		
-			H21-0296-04	PROTECTION SHEET		
-			H25-0232-04	PROTECTION BAG (235X350X0.03)	ME	
-			H25-0651-04	PROTECTION BAG (0232)	T	
-		*	H25-0695-04	PROTECTION BAG		
-		*	H50-0517-04	ITEM CARTON CASE		

L:Scandinavia K:USA P:Canada
Y:PX(Far East, Hawaii) T:England E:Europe
[illegible]

⚠ indicates safety critical components.

* New Parts
Parts without Parts No. are not supplied.
Les articles non mentionnes dans le Parts No. ne sont pas fournis.
Teile ohne Parts No. werden nicht gellefert.

❷

Ref. No. 参照番号	Address 位置	New Parts 新	Parts No. 部品番号	Description 部品名／規格	Destination 仕向	Remarks 備考
660	1C	*	J11-0188-04	CLAMPER ASSY		
661	3C		J19-0514-05	UNIT HOLDER	M	
662	1C	*	J30-0293-04	SPACER		
664	3E,3F		J02-1080-04	FOOT		
665	2H		J11-0163-05	WIRE CLAMPER		
667	2G	*	J11-0189-05	CLAMPER		
668	1C		J11-0187-04	CLAMPER		
⚠ 670	1J		J42-0194-05	POWER CORD BUSHING	ME	
⚠ 670	1J		J42-0195-05	POWER CORD BUSHING	T	
-			J61-0307-05	WIRE BAND	T	
671	3C	*	K29-5634-04	KNOB (OPEN/CLOSE)		
⚠ 672	2G	*	L07-0715-05	POWER TRANSFORMER(DIGITAL)	TE	
⚠ 672	2G	*	L07-0717-05	POWER TRANSFORMER(DIGITAL)	M	
⚠ 673	2G	*	L07-0716-05	POWER TRANSFORMER(ANALOG)	TE	
⚠ 673	2G	*	L07-0718-05	POWER TRANSFORMER(ANALOG)	M	
⚠ 674	3G	*	L92-0039-05	FERRITE CORE		
SW1	2D		S33-3001-05	ROTARY SWITCH (OPEN1/CLOSE)		
SW2,3	2D		S64-0012-05	LEVER SWITCH (OPEN2/OPEN3)		
680	2D		T42-0486-05	DC MOTOR (DOOR OPEN)		
DISPLAY (X25-5180-00)						
D1 ,2			B30-1290-05	LED		
C1			CK45FF1H103Z	CERAMIC 0.010UF Z		
C2 ,3			C90-3223-05	ELECTRO 220UF 10WV		
C10			CK45FF1H103Z	CERAMIC 0.010UF Z		
C12 ,13			CK45FF1H103Z	CERAMIC 0.010UF Z		
C14			CE04KW1H010M	ELECTRO 1.0UF 50WV		
C15			C90-1827-05	BACKUP 0.047F 5.5WV		
C16			CK45FF1H103Z	CERAMIC 0.010UF Z		
C17			C90-3219-05	ELECTRO 33UF 10WV		
C18			C90-3253-05	ELECTRO 1UF 50WV		
C19			CK45FF1H103Z	CERAMIC 0.010UF Z		
-		*	G11-2159-04	CUSHION		
-			J11-0098-05	WIRE CLAMPER		
X1			L78-0267-05	RESONATOR (4.194MHZ)		
R8			RN14BK2C1800F	RN 180.0 F 1/6W		
R9 ,10			RN14BK2C2201F	RN 2.20K F 1/6W		
S1 -7	2C,3D		S40-1064-05	PUSH SWITCH		
D3 -9			HSS104	DIODE		
D3 -9			1SS133	DIODE		
D10			HZS5.1S(B2)	ZENER DIODE		
D10			RD5.1JS(B2)	ZENER DIODE		
D11			HZS7.5S(B2)	ZENER DIODE		
D11			RD7.5JS(B2)	ZENER DIODE		
D12 -16			HSS104	DIODE		
D12 -16			1SS133	DIODE		
ED1	3D	*	CP1169C	INDICATOR TUBE		
IC1		*	UPD75216ACW-W36	IC(MICROPROCESSOR)		
IC2			NJM431L	IC(REGULATOR)		
IC3			PST529D	IC(SYSTEM RESET)		

L:Scandinavia K:USA P:Canada
Y:PX(Far East, Hawaii) T:England E:Europe
Y:AAFES(Europe) X:Australia M:Other Areas

⚠ indicates safety critical components.

* New Parts
Parts Without Parts No. are not supplied.
Les articles non mentionnés dans le Parts No. ne sont pas fournis.
Teile ohne Parts No. werden nicht geliefert.

❺

Ref. No. 参照番号	Address 位置	New Parts 新	Parts No. 部品番号	Description 部品名／規格	Destination 仕向	Remarks 備考
R47 ,48			RN14BK2C5101F	RN 5.10K F 1/6W		
R49 ,50			RN14BK2C1601F	RN 1.60K F 1/6W		
R51 -54			RN14BK2C2001F	RN 2.00K F 1/6W		
R55 ,56			RN14BK2C1000F	RN 100.0 F 1/6W		
R57 ,58			RN14BK2C1501F	RN 1.50K F 1/6W		
R59 ,60			RN14BK2C1001F	RN 1.00K F 1/6W		
R61 -74			RN14BK2C1000F	RN 100.0 F 1/6W		
R75 ,76			RN14BK2C3901F	RN 3.90K F 1/6W		
R77 ,78			RN14BK2C2200F	RN 220.0 F 1/6W		
R79 ,80			RN14BK2C1301F	RN 1.30K F 1/6W		
R81 ,82			RN14BK2C1001F	RN 1.00K F 1/6W		
R83 ,84			RN14BK2C2200F	RN 220.0 F 1/6W		
R85 ,86			RN14BK2C1000F	RN 100.0 F 1/6W		
R87 -90			RN14BK2C3300F	RN 330.0 F 1/6W		
R91 -94			RN14BK2C10R0F	RN 10.0 F 1/6W		
R95			RN14BK2E10R0F	RN 10.0 F 1/4W		
R101-104			RN14BK2E2201F	RN 2.20K F 1/4W		
R105,106			RN14BK2E3001F	RN 3.00K F 1/4W		
R107-110			RN14BK2E2001F	RN 2.00K F 1/4W		
R111-114			RN14BK2E1000F	RN 100.0 F 1/4W		
R115,116			RN14BK2E3300F	RN 330.0 F 1/4W		
R117-120			RN14BK2E1000F	RN 100.0 F 1/4W		
R121,122			RN14BK2E1501F	RN 1.50K F 1/4W		
R123-130			RN14BK2E1000F	RN 100.0 F 1/4W		
R131,132			RN14BK2C1000F	RN 100.0 F 1/6W		
R133,134			RN14BK2E3901F	RN 3.90K F 1/4W		
R135,136			RN14BK2E2200F	RN 220.0 F 1/4W		
R137,138			RN14BK2E2701F	RN 2.70K F 1/4W		
R139,140			RN14BK2E6800F	RN 680.0 F 1/4W		
R141,142			RN14BK2E2200F	RN 220.0 F 1/4W		
R143,144			RN14BK2E1000F	RN 100.0 F 1/4W		
R145-148			RN14BK2E3300F	RN 330.0 F 1/4W		
R149,150			RN14BK2E75R0F	RN 75.0 F 1/4W		
R151,152			RN14BK2E10R0F	RN 10.0 F 1/4W		
R153-156			RN14BK2E1000F	RN 100.0 F 1/4W		
R157,158			RN14BK2E10R0F	RN 10.0 F 1/4W		
R159-162			R92-0110-05	METAL-PLATE 0.47 K 2W		
R163,164			RN14BK2E4701F	RN 4.70K F 1/4W		
R165,166			RD14GB2E470J	FL-PROOF RD 47 J 1/4W		
R167,168			RN14BK2E1001F	RN 1.00K F 1/4W		
R169,170			RS14KB3D100J	FL-PROOF RS 10 J 2W		
R171,172			RS14KB3D220J	FL-PROOF RS 22 J 2W		
R173,174			RN14BK2E4702F	RN 47.0K F 1/4W		
R175,176			RN14BK2E1001F	RN 1.00K F 1/4W		
R177-180			RN14BK2E2000F	RN 200.0 F 1/4W		
R185			RN14BK2E2202F	RN 22.0K F 1/4W		
R186			RN14BK2E4702F	RN 47.0K F 1/4W		
R187			RN14BK2E1601F	RN 1.60K F 1/4W		
R200			RN14BK2E2201F	RN 2.20K F 1/4W		
R303			RN14BK2C2002F	RN 20.0K F 1/6W		
R304			RN14BK2E1001F	RN 1.00K F 1/4W		
R351			RN14BK2C1004F	RN 1.00M F 1/6W		
R401			RN14BK2C1500F	RN 150.0 F 1/6W		
R402			RN14BK2C20R0F	RN 20.0 F 1/6W		
VR101,102			R12-0606-05	TRIMMING POT.(330)IDEL		

L:Scandinavia K:USA P:Canada
Y:PX(Far East, Hawaii) T:England E:Europe
Y:AAFES(Europe) X:Australia M:Other Areas

⚠ indicates safety critical components

* New Parts
Parts Without Parts No. are not supplied.
Les articles non mentionnés dans le Parts No. ne sont pas fournis.
Teile ohne Parts No. werden nicht geliefert.

❻

Ref. No. 参照番号	Address 位置	New Parts 新	Parts No. 部品番号	Description 部品名／規格	Destination 仕向	Remarks 備考
K101,102			S76-0027-05	MAGNETIC RELAY		
S1	1H	*	S62-0025-05	SLIDE SWITCH		
S401	1H		S31-2094-05	SLIDE SWITCH		
D1 ,2			E-202	CONSTANT CURRENT DIODE		
D3 ,4			E-352	CONSTANT CURRENT DIODE		
D5 ,6			E-202	CONSTANT CURRENT DIODE		
D13 -16			HSS104	DIODE		
D13 -16			1SS133	DIODE		
D17 -20		*	RD4.7JS(B2)	ZENER DIODE		
D101,102			E-202	CONSTANT CURRENT DIODE		
D103,104			E-352	CONSTANT CURRENT DIODE		
D105-110			E-202	CONSTANT CURRENT DIODE		
D117-120			HSS104	DIODE		
D117-120			1SS133	DIODE		
D125,126			HSS104	DIODE		
D125,126			1SS133	DIODE		
D129-132		*	RD4.7JS(B2)	ZENER DIODE		
D133-136			HSS104	DIODE		
D133-136			1SS133	DIODE		
IC1 ,2			TDA1547	IC(DAC)		
IC301			SAA7350	IC(DAC)		
Q1 -4			2SC1845(F,E)	TRANSISTOR		
Q5 -8			2SC2837	TRANSISTOR		
Q9 ,10			2SA992(F,E)	TRANSISTOR		
Q11 ,12			2SC1845(F,E)	TRANSISTOR		
Q13 -22			2SA992(F,E)	TRANSISTOR		
Q23 -26			2SC1845(F,E)	TRANSISTOR		
Q27 ,28			2SC4137	TRANSISTOR		
Q29 ,30			2SC2590	TRANSISTOR		
Q31 ,32			2SA1110	TRANSISTOR		
Q34 ,35			2SA954(L,K)	TRANSISTOR		
Q101-104			2SC1845(F,E)	TRANSISTOR		
Q105-108			2SC2837	TRANSISTOR		
Q109,110			2SA992(F,E)	TRANSISTOR		
Q111,112			2SC1845(F,E)	TRANSISTOR		
Q113-122			2SA992(F,E)	TRANSISTOR		
Q123-126			2SC1845(F,E)	TRANSISTOR		
Q127,128			2SC4137	TRANSISTOR		
Q129,130			2SC1845(F,E)	TRANSISTOR		
Q131,132			2SA992(F,E)	TRANSISTOR		
Q133-136			2SC2003(L,K)	TRANSISTOR		
Q137-140			2SA954(L,K)	TRANSISTOR		
Q141,142			2SD2012	TRANSISTOR		
Q143,144			2SB1375	TRANSISTOR		
Q145,146			2SC2003(L,K)	TRANSISTOR		
Q148			2SC2003(L,K)	TRANSISTOR		
Q149,150			2SA954(L,K)	TRANSISTOR		
Q302,303			2SK161(GR)	FET		
A401			W02-1114-05	OSCILLATING MODULE (OPTICAL)		
CONTROL (X29-2410-10)						
D2	1H	*	B30-2436-05	LED		
C1 ,2			CE04KW1V100M	ELECTRO 10UF 35WV		
C4 -6			CE04KW1V100M	ELECTRO 10UF 35WV		

L:Scandinavia K:USA P:Canada
Y:PX(Far East, Hawaii) T:England E:Europe
Y:AAFES(Europe) X:Australia M:Other Areas

⚠ indicates safety critical components

PARTS LIST

* New Parts
Parts without Parts No. are not supplied
Les articles non mentionnés dans la Parts No. ne sont pas fournis
Teile ohne Parts No. werden nicht geliefert.

❼

Ref. No. 参照番号	Address 位置	New Parts 新	Parts No. 部品番号	Description 部品名／規格	Destination 仕向	Remarks 備考
C7			CE04KW1A101M	ELECTRO 100UF 10WV		
C8			CF92FV1H104J	MF 0.10UF J		
R11			RS14KB3D2R2J	FL-PROOF RS 2.2 J 2W		
R14 -16			RS14KB3D1R8J	FL-PROOF RS 1.8 J 2W		
D1			HZS2.7N(B2)	ZENER DIODE		
D1			RD2.7ES(B2)	ZENER DIODE		
D3 ,4			HSS104	DIODE		
D3 ,4			1SS133	DIODE		
IC1		*	TA7736P	IC(MOTOR DRIVER)		
IC2 ,3			M5223P	IC(OP AMP X2)		
IC4			TC74HC74AP	IC(DUAL D-TYPE FLIP FLOP)		
PH1		*	RPM-20PB	PHOTO TRANSISTOR		
Q1 ,2			DTC124ES	DIGITAL TRANSISTOR		
Q3			DTA124ES	DIGITAL TRANSISTOR		
SIGNAL PROCESSOR UNIT (X32-2442-71)						
C1 -6			CE04KW1C330M	ELECTRO 33UF 16WV		
C7			CE04KW1E470M	ELECTRO 47UF 25WV		
C9			CE04KW1C330M	ELECTRO 33UF 16WV		
C10			CE04DW0J102M	ELECTRO 1000UF 6.3WV		
C11 ,12			CE04KW1A101M	ELECTRO 100UF 10WV		
C20			CF92FV1H105J	MF 1.0UF J		
C21 ,22			CE04KW1C330M	ELECTRO 33UF 16WV		
C23 -25			CE04KW0J471M	ELECTRO 470UF 6.3WV		
C26			CE04KW1C330M	ELECTRO 33UF 16WV		
C27			CF92FV1H104J	MF 0.10UF J		
C30			CE04KW1E470M	ELECTRO 47UF 25WV		
C31 ,32			CE04KW1V101M	ELECTRO 100UF 35WV		
C101,102			CE04KW1C220M	ELECTRO 22UF 16WV		
C103,104			CC45FSL1H470J	CERAMIC 47PF J		
C105			CF92FV1H561J	MF 560PF J		
C106			CF92FV1H333J	MF 0.033UF J		
C107			CE04KW1V100M	ELECTRO 10UF 35WV		
C108			CF92FV1H333J	MF 0.033UF J		
C109			CE04HW1A220M	NP-ELEC 22UF 10WV		
C110			CF92FV1H334J	MF 0.33UF J		
C111-113			CF92FV1H103J	MF 0.010UF J		
C114			CE04KW1HR47M	ELECTRO 0.47UF 50WV		
C115			CF92FV1H563J	MF 0.056UF J		
C116			CF92FV1H103J	MF 0.010UF J		
C117			CF92FV1H102J	MF 1000PF J		
C118			CF92FV1H332J	MF 3300PF J		
C119			CC45FSL1H470J	CERAMIC 47PF J		
C120			CF92FV1H104J	MF 0.10UF J		
C121			CE04KW1V4R7M	ELECTRO 4.7UF 35WV		
C122-124			CF92FV1H104J	MF 0.10UF J		
C125			CF92FV1H152J	MF 1500PF J		
C126			CF92FV1H473J	MF 0.047UF J		
C127			CF92FV1H103J	MF 0.010UF J		
C128			CF92FV1H124J	MF 0.12UF J		
C129			CF92FV1H224J	MF 0.22UF J		
C130-133			CC45FSL1H470J	CERAMIC 47PF J		
C135			CF92FV1H271K	MF 270PF K		
C136			CF92FV1H331K	MF 330PF K		
C137			C91-1469-05	FILM 39PF K		

L:Scandinavia K:USA P:Canada
Y:PX(Far East, Hawaii) T:England E:Europe
Y:AAFES(Europe) X:Australia M:Other Areas

⚠ indicates safety critical components

* New Parts
Parts without Parts No. are not supplied
Les articles non mentionnés dans la Parts No. ne sont pas fournis
Teile ohne Parts No. werden nicht geliefert.

❽

Ref. No. 参照番号	Address 位置	New Parts 新	Parts No. 部品番号	Description 部品名／規格	Destination 仕向	Remarks 備考
C138			CF92FV1H474J	MF 0.47UF J		
C139			CF92V1H104J	MF 0.10UF J		
C140			CE04KW0J471M	ELECTRO 470UF 6.3WV		
C201			CE04KW1V470M	ELECTRO 47UF 35WV		
C202			CE04KW1E220M	ELECTRO 22UF 25WV		
C203			CE04KW1E101M	ELECTRO 100UF 25WV		
C204			CE04KW1C330M	ELECTRO 33UF 16WV		
C206			CE04KW1E220M	ELECTRO 22UF 25WV		
C207			CE04KW1C330M	ELECTRO 33UF 16WV		
C208			CE04DW0J102M	ELECTRO 1000UF 6.3WV		
C209,210			CE04KW1C330M	ELECTRO 33UF 16WV		
C211			CF92FV1H102J	MF 1000PF J		
C212			CE04KW1H2R2M	ELECTRO 2.2UF 50WV		
C213			CE04KW1V4R7M	ELECTRO 4.7UF 35WV		
C214,215			CF92FV1H101K	MF 100PF K		
C216			CF92FV1H162J	MF 1600PF J		
C217			CE04KW1V4R7M	ELECTRO 4.7UF 35WV		
C218			CE04KW1V100M	ELECTRO 10UF 35WV		
C219,220			CE04KW1C330M	ELECTRO 33UF 16WV		
C221			CF92FV1H333J	MF 0.033UF J		
C222			CF92FV1H223J	MF 0.022UF J		
C223			CF92FV1H681J	MF 680PF J		
C224			CF92FV1H102J	MF 1000PF J		
C225			CE04KW1H2R2M	ELECTRO 2.2UF 50WV		
C226			CE04KW1V4R7M	ELECTRO 4.7UF 35WV		
C227,228			CF92FV1H101K	MF 100PF K		
C229			CF92FV1H162J	MF 1600PF J		
C230			CE04KW1V4R7M	ELECTRO 4.7UF 35WV		
C231			CE04KW1V100M	ELECTRO 10UF 35WV		
C232			CE04KW1E470M	ELECTRO 47UF 25WV		
C235,236			CF92FV1H331K	MF 330PF K		
C239-242			CF92FV1H331K	MF 330PF K		
C246,247			CE04KW1E470M	ELECTRO 47UF 25WV		
C301			CE04KW1H470M	ELECTRO 47UF 50WV		
C302			CE04KW1E221M	ELECTRO 220UF 25WV		
⚠ C305			C91-1439-05	FILM 0.01UF 250VAC		
C351,352			CE04KW1A221M	ELECTRO 220UF 10WV		
C353,354			CF92FV1H103J	MF 0.010UF J		
C355			CF92FV1H104J	MF 0.10UF J		
C356			CF92FV1H103J	MF 0.010UF J		
C357			CE04KW1H220M	ELECTRO 22UF 50WV		
C358			CE04KW1A101M	ELECTRO 100UF 10WV		
C359			CE04KW1H220M	ELECTRO 22UF 50WV		
C360,361			CE04KW1E222M	ELECTRO 2200UF 25WV		
C362,363			CE04KW1A221M	ELECTRO 220UF 10WV		
C364,365			CF92FV1H103J	MF 0.010UF J		
C366,367			CF92FV1H104J	MF 0.10UF J		
C368			CE04KW1H220M	ELECTRO 22UF 50WV		
C369			CE04KW1A101M	ELECTRO 100UF 10WV		
C370			CE04KW1H220M	ELECTRO 22UF 50WV		
C371,372			CE04KW1C332M	ELECTRO 3300UF 16WV		
C373,374			CE04KW1E101M	ELECTRO 100UF 25WV		
C375,376			CF92FV1H104J	MF 0.10UF J		
C377,378			CF92FV1H103J	MF 0.010UF J		
C379			CE04KW1H220M	ELECTRO 22UF 50WV		

L:Scandinavia K:USA P:Canada
Y:PX(Far East, Hawaii) T:England E:Europe
Y:AAFES(Europe) X:Australia M:Other Areas

⚠ indicates safety critical components

* New Parts
Parts without Parts No. are not supplied
Les articles non mentionnés dans le Parts No. ne sont pas fournis
Teile ohne Parts No. werden nicht geliefert.

9

Ref. No. 参照番号	Address 位置	New Parts 新	Parts No. 部品番号	Description 部品名／規格	Destination 仕向	Remarks 備考
C380			CE04KW1A101M	ELECTRO 100UF 10WV		
C381			CE04KW1H220M	ELECTRO 22UF 50WV		
C382,383			CE04KW1E222M	ELECTRO 2200UF 25WV		
C384-387		*	C90-1984-05	ELECTRO 6800UF 25WV		
⚠ F201		*	F53-0063-05	FUSE(SEMKO)		
⚠ F202		*	F53-0060-05	FUSE(SEMKO)		
L1 -5			L92-0018-05	FERRITE CORE		
L7			L40-2201-17	SMALL FIXED INDUCTOR(22UH,K)		
L8			L40-2291-17	SMALL FIXED INDUCTOR		
L355,356			L92-0018-05	FERRITE CORE		
⚠ T301	2G		L01-7652-05	POWER TRANSFORMER	TE	
⚠ T301	2G		L01-7653-05	POWER TRANSFORMER	M	
R1			RN14BK2C3300F	RN 330.0 F 1/6W		
R2 ,3			RN14BK2C4641F	RN 4.64K F 1/6W		
R4			RN14BK2C1001F	RN 1.00K F 1/6W		
R5			RN14BK2C3300F	RN 330.0 F 1/6W		
R6 ,7			RN14BK2C4641F	RN 4.64K F 1/6W		
R8			RN14BK2C1001F	RN 1.00K F 1/6W		
R9 ,10			RN14BK2C8200F	RN 820.0 F 1/6W		
R21			RN14BK2E2400F	RN 240.0 F 1/4W		
R22			RN14BK2E7500F	RN 750.0 F 1/4W		
R23			RN14BK2E1201F	RN 1.20K F 1/4W		
R101-104			RN14BK2C6802F	RN 68.0K F 1/6W		
R105,106			RN14BK2C1003F	RN 100K F 1/6W		
R107			RN14BK2C91R0F	RN 91.0 F 1/6W		
R110			RN14BK2C10R0F	RN 10.0 F 1/6W		
R111			RN14BK2C2202F	RN 22.0K F 1/6W		
R112,113			RN14BK2C1001F	RN 1.00K F 1/6W		
R114			RN14BK2C1002F	RN 10.0K F 1/6W		
R115			RN14BK2C1302F	RN 13.0K F 1/6W		
R116,117			RN14BK2C2201F	RN 2.20K F 1/6W		
R118			RN14BK2C4701F	RN 4.70K F 1/6W		
R119			RN14BK2C4700F	RN 470.0 F 1/6W		
R120			RN14BK2C2201F	RN 2.20K F 1/6W		
R121			RN14BK2C4702F	RN 47.0K F 1/6W		
R122			RN14BK2C1003F	RN 100K F 1/6W		
R123			RN14BK2C3302F	RN 33.0K F 1/6W		
R124			RN14BK2C8202F	RN 82.0K F 1/6W		
R126			RN14BK2C7501F	RN 7.50K F 1/6W		
R127			RN14BK2C3302F	RN 33.0K F 1/6W		
R128			RN14BK2C5103F	RN 510K F 1/6W		
R129			RN14BK2C1203F	RN 120K F 1/6W		
R130			RN14BK2C2401F	RN 2.40K F 1/6W		
R131			RN14BK2C1002F	RN 10.0K F 1/6W		
R132			RN14BK2C1003F	RN 100K F 1/6W		
R133			RN14BK2C4702F	RN 47.0K F 1/6W		
R134			RN14BK2C3903F	RN 390K F 1/6W		
R135			RN14BK2C1002F	RN 10.0K F 1/6W		
R136			RN14BK2C4701F	RN 4.70K F 1/6W		
R137			RN14BK2C4702F	RN 47.0K F 1/6W		
R138			RN14BK2C5603F	RN 560K F 1/6W		
R139,140			RN14BK2C1002F	RN 10.0K F 1/6W		
R141,142			RN14BK2C4702F	RN 47.0K F 1/6W		

L:Scandinavia K:USA P:Canada
Y:PX(Far East, Hawaii) T:England E:Europe
Y:AAFES(Europe) X:Australia M:Other Areas

⚠ indicates safety critical components

* New Parts
Parts without Parts No. are not supplied
Les articles non mentionnés dans le Parts No. ne sont pas fournis
Teile ohne Parts No. werden nicht geliefert.

10

Ref. No. 参照番号	Address 位置	New Parts 新	Parts No. 部品番号	Description 部品名／規格	Destination 仕向	Remarks 備考
R143			RN14BK2C1002F	RN 10.0K F 1/6W		
R144			RN14BK2C3301F	RN 3.30K F 1/6W		
R145			RN14BK2C6801F	RN 6.80K F 1/6W		
R146-148			RN14BK2C4700F	RN 470.0 F 1/6W		
R149-151			RN14BK2C1001F	RN 1.00K F 1/6W		
R152			RN14BK2C2201F	RN 2.20K F 1/6W		
R153			RN14BK2C1001F	RN 1.00K F 1/6W		
R154,155			RN14BK2C1000F	RN 100.0 F 1/6W		
R156			RN14BK2C1001F	RN 1.00K F 1/6W		
R161			RN14BK2C2200F	RN 220.0 F 1/6W		
R162			RN14BK2C2700F	RN 270.0 F 1/6W		
R164			RN14BK2C1500F	RN 150.0 F 1/6W		
R165			RN14BK2C1800F	RN 180.0 F 1/6W		
R168			RN14BK2C1002F	RN 10.0K F 1/6W		
R169,170			RN14BK2C2202F	RN 22.0K F 1/6W		
R171			RN14BK2C1002F	RN 10.0K F 1/6W		
R172			RN14BK2C1601F	RN 1.60K F 1/6W		
R173			RN14BK2C4700F	RN 470.0 F 1/6W		
R174			RN14BK2C1002F	RN 10.0K F 1/6W		
R175			RN14BK2C9100F	RN 910.0 F 1/6W		
R176,177			RN14BK2C1002F	RN 10.0K F 1/6W		
R178			RN14BK2C1802F	RN 18.0K F 1/6W		
R202			RN14BK2C5621F	RN 5.62K F 1/6W		
R203			RN14BK2C7501F	RN 7.50K F 1/6W		
R204			RN14BK2E1001F	RN 1.00K F 1/4W		
R206,207			RN14BK2C4641F	RN 4.64K F 1/6W		
R210			RN14BK2E3901F	RN 3.90K F 1/4W		
R211			RN14BK2E1202F	RN 12.0K F 1/4W		
R212,213			RN14BK2E5600F	RN 560.0 F 1/4W		
R214			RN14BK2E1000F	RN 100.0 F 1/4W		
R215			RN14BK2E2401F	RN 2.40K F 1/4W		
R216,217			RN14BK2E1000F	RN 100.0 F 1/4W		
R218			RN14BK2E33R0F	RN 33.0 F 1/4W		
R221			RN14BK2E4701F	RN 4.70K F 1/4W		
R222			RN14BK2E3601F	RN 3.60K F 1/4W		
R223			RN14BK2E1101F	RN 1.10K F 1/4W		
R224,225			RN14BK2E2001F	RN 2.00K F 1/4W		
R226			RN14BK2E1000F	RN 100.0 F 1/4W		
R227			RN14BK2E2400F	RN 240.0 F 1/4W		
R228			R92-0110-05	METAL-PLATE 0.47 K 2W		
R230			R92-0110-05	METAL-PLATE 0.47 K 2W		
R232,233			RN14BK2E3901F	RN 3.90K F 1/4W		
R234			RN14BK2E5101F	RN 5.10K F 1/4W		
R235			RN14BK2E1202F	RN 12.0K F 1/4W		
R236			RN14BK2E2401F	RN 2.40K F 1/4W		
R237			RN14BK2E9101F	RN 9.10K F 1/4W		
R238,239			RN14BK2E8200F	RN 820.0 F 1/4W		
R240			RN14BK2E1000F	RN 100.0 F 1/4W		
R241			RN14BK2E2401F	RN 2.40K F 1/4W		
R242,243			RN14BK2E1000F	RN 100.0 F 1/4W		
R244			RN14BK2E33R0F	RN 33.0 F 1/4W		
R247			RN14BK2E4701F	RN 4.70K F 1/4W		
R248			RN14BK2E3601F	RN 3.60K F 1/4W		
R249			RN14BK2E1101F	RN 1.10K F 1/4W		
R250,251			RN14BK2E2001F	RN 2.00K F 1/4W		

L:Scandinavia K:USA P:Canada
Y:PX(Far East, Hawaii) T:England E:Europe
Y:AAFES(Europe) X:Australia M:Other Areas

⚠ indicates safety critical components

* New Parts
Parts without Parts No. are not supplied
Les articles non marqués ne sont pas fournis
Teile ohne Parts No. werden nicht geliefert.

⑪

Ref. No. 参照番号	Address 位置	New Parts 新	Parts No. 部品番号	Description 部品名／規格	Destination 仕向	Remarks 備考
R252			RN14BK2E1000F	RN 100.0 F 1/4W		
R253			RN14BK2E2400F	RN 240.0 F 1/4W		
R254			R92-0110-05	METAL-PLATE 0.47 K 2W		
R256			R92-0110-05	METAL-PLATE 0.47 K 2W		
R258,259			RN14BK2E2401F	RN 2.40K F 1/4W		
R260			R92-0110-05	METAL-PLATE 0.47 K 2W		
R262			R92-0110-05	METAL-PLATE 0.47 K 2W		
R264-275			RN14BK2E1000F	RN 100.0 F 1/4W		
R276			RN14BK2E3901F	RN 3.90K F 1/4W		
R279			RN14BK2E1202F	RN 12.0K F 1/4W		
R301,302			RN14BK2C2202F	RN 22.0K F 1/6W		
R303			RN14BK2C1002F	RN 10.0K F 1/6W		
R304			RN14BK2C2201F	RN 2.20K F 1/6W		
R305			RN14BK2C1001F	RN 1.00K F 1/6W		
R351,352			RN14BK2C1000F	RN 100.0 F 1/6W		
R353			RN14BK2C2001F	RN 2.00K F 1/6W		
R354			RN14BK2C3301F	RN 3.30K F 1/6W		
R355,356			RN14BK2C4701F	RN 4.70K F 1/6W		
R357-359			RN14BK2C1000F	RN 100.0 F 1/6W		
R360,361			RN14BK2C3301F	RN 3.30K F 1/6W		
R362,363			RN14BK2C4701F	RN 4.70K F 1/6W		
R364-366			RN14BK2C1000F	RN 100.0 F 1/6W		
R367			RN14BK2C3901F	RN 3.90K F 1/6W		
R368			RN14BK2C2201F	RN 2.20K F 1/6W		
R369,370			RN14BK2C4701F	RN 4.70K F 1/6W		
R371			RN14BK2C1000F	RN 100.0 F 1/6W		
VR1 ,2			R12-3127-05	TRIMMING POT.(10K)		
VR3 ,4			R12-3129-05	TRIMMING POT.(22K)		
VR5		*	R12-0110-05	TRIMMING POT.(470)		
⚠ K301			S76-0002-05	MAGNETIC RELAY		
D1 ,2			HZS5.1N(B2)	ZENER DIODE		
D1 ,2			RD5.1ES(B2)	ZENER DIODE		
D3			HSS104	DIODE		
D3			1SS133	DIODE		
D6 ,7			HSS104	DIODE		
D6 ,7			1SS133	DIODE		
D201			HZS8.2N(B2)	ZENER DIODE		
D201			RD8.2ES(B2)	ZENER DIODE		
D202			HZS5.1N(B2)	ZENER DIODE		
D202			RD5.1ES(B2)	ZENER DIODE		
D203			HZS8.2N(B2)	ZENER DIODE		
D203			RD8.2ES(B2)	ZENER DIODE		
D204			E-452	CONSTANT CURRENT DIODE		
D205,206			E-102	CONSTANT CURRENT DIODE		
D207-215			HSS104	DIODE		
D207-215			1SS133	DIODE		
D216			E-202	CONSTANT CURRENT DIODE		
D217			E-352	CONSTANT CURRENT DIODE		
D218			E-202	CONSTANT CURRENT DIODE		
D219			HZS5.1N(B2)	ZENER DIODE		
D219			RD5.1ES(B2)	ZENER DIODE		
D220-228			HSS104	DIODE		
D220-228			1SS133	DIODE		
D229			E-202	CONSTANT CURRENT DIODE		

L:Scandinavia K:USA P:Canada
Y:PX(Far East, Hawaii) T:England E:Europe
Y:AAFES(Europe) X:Australia M:Other Areas

⚠ indicates safety critical components

* New Parts
Parts without Parts No. are not supplied
Les articles non marqués ne sont pas fournis
Teile ohne Parts No. werden nicht geliefert.

⑫

Ref. No. 参照番号	Address 位置	New Parts 新	Parts No. 部品番号	Description 部品名／規格	Destination 仕向	Remarks 備考
D230			E-352	CONSTANT CURRENT DIODE		
D231			E-202	CONSTANT CURRENT DIODE		
D232			HZS5.1N(B2)	ZENER DIODE		
D232			RD5.1ES(B2)	ZENER DIODE		
D301,302			S5688B	DIODE		
⚠ D303			1B4B41	DIODE		
D304,305			HSS104	DIODE		
D304,305			1SS133	DIODE		
D351,352			E-202	CONSTANT CURRENT DIODE		
D353-356			HZS5.1S(B2)	ZENER DIODE		
D353-356			RD5.1JS(B2)	ZENER DIODE		
D357			E-202	CONSTANT CURRENT DIODE		
D358			HZS5.1S(B2)	ZENER DIODE		
D358			RD5.1JS(B2)	ZENER DIODE		
⚠ D359			1B4B41	DIODE		
D360,361			E-202	CONSTANT CURRENT DIODE		
D362,363			HZS5.1S(B2)	ZENER DIODE		
D362,363			RD5.1JS(B2)	ZENER DIODE		
D364			E-202	CONSTANT CURRENT DIODE		
⚠ D365			1B4B41	DIODE		
D366-371			HZS5.1S(B2)	ZENER DIODE		
D366-371			RD5.1JS(B2)	ZENER DIODE		
D372			E-202	CONSTANT CURRENT DIODE		
D373			HZS5.1S(B2)	ZENER DIODE		
D373			RD5.1JS(B2)	ZENER DIODE		
D374,375			E-202	CONSTANT CURRENT DIODE		
⚠ D376-378			1B4B41	DIODE		
IC1			NJM2114D	IC(OP AMP X2)		
IC4			NJM4558D	IC(OP AMP X2)		
IC5 ,6			NJM431L	IC(REGULATOR)		
IC10			TA8409S	IC(MOTOR CONTROL)		
IC11			CXA1571S	IC(CD RF AMP)		
IC12			CXA1372Q	IC(CD RF SERVO)		
IC13		*	CXD2500BQ	IC(DIGITAL SIGNAL PROCESSOR)		
IC14			PST529D	IC(SYSTEM RESET)		
IC15			SM5803APT	IC(DIGITAL FILTER)		
IC201			NJM2114D	IC(OP AMP X2)		
IC351,352			NJM2114D	IC(OP AMP X2)		
IC353			NJM431L	IC(REGULATOR)		
IC354			NJM2114D	IC(OP AMP X2)		
Q1			2SB1375	TRANSISTOR		
Q2			2SC2590	TRANSISTOR		
Q3			2SC3851	TRANSISTOR		
Q6		*	2SC4511	TRANSISTOR		
Q7		*	2SA1725	TRANSISTOR		
Q8			2SA1048(Y,GR)	TRANSISTOR		
Q8			2SA1309A(Q,R)	TRANSISTOR		
Q9			2SC2458(Y,GR)	TRANSISTOR		
Q9			2SC3311A(Q,R)	TRANSISTOR		
Q10			DTC124ES	DIGITAL TRANSISTOR		
Q11			2SC1740S(Q,R)	TRANSISTOR		
Q11			2SC2785(F,E)	TRANSISTOR		
Q12			2SA933S(Q,R)	TRANSISTOR		
Q13			DTC124ES	DIGITAL TRANSISTOR		
Q14 ,15			DTA124ES	DIGITAL TRANSISTOR		

L:Scandinavia K:USA P:Canada
Y:PX(Far East, Hawaii) T:England E:Europe
Y:AAFES(Europe) X:Australia M:Other Areas

⚠ indicates safety critical components

* New Parts
Parts without Parts No. are not supplied.
Les articles non mentionnes dans le Parts No. ne sont pas fournis.
Teile ohne Parts No. werden nicht geliefert.

⑬

Ref. No. 参照番号	Address 位置	New Parts 新	Parts No. 部品番号	Description 部品名／規格	Destination 仕向	Remarks 備考
Q201			2SD1944(J,K)	TRANSISTOR		
Q202			2SB1375	TRANSISTOR		
Q203,204			2SC1845(F,E)	TRANSISTOR		
Q205,206			2SC2590	TRANSISTOR		
Q207			2SA992(F,E)	TRANSISTOR		
Q208			2SC1845(F,E)	TRANSISTOR		
Q209-213			2SA992(F,E)	TRANSISTOR		
Q214			2SC4137	TRANSISTOR		
Q215			2SC1845(F,E)	TRANSISTOR		
Q216			2SC2003(L,K)	TRANSISTOR		
Q217			2SA954(L,K)	TRANSISTOR		
Q218			2SD2012	TRANSISTOR		
Q219			2SB1375	TRANSISTOR		
Q220,221			2SC1845(F,E)	TRANSISTOR		
Q222,223			2SC2590	TRANSISTOR		
Q224			2SA992(F,E)	TRANSISTOR		
Q225			2SC1845(F,E)	TRANSISTOR		
Q226-230			2SA992(F,E)	TRANSISTOR		
Q231			2SC4137	TRANSISTOR		
Q232			2SC1845(F,E)	TRANSISTOR		
Q233			2SC2003(L,K)	TRANSISTOR		
Q234			2SA954(L,K)	TRANSISTOR		
Q235			2SD2012	TRANSISTOR		
Q236			2SB1375	TRANSISTOR		
Q237			2SD2012	TRANSISTOR		
Q238			2SB1375	TRANSISTOR		
Q239			2SD2012	TRANSISTOR		
Q240,241			2SB1375	TRANSISTOR		
Q301			2SC2003(L,K)	TRANSISTOR		
Q302			2SA954(L,K)	TRANSISTOR		
Q351			2SD1944(J,K)	TRANSISTOR		
Q352			2SB1375	TRANSISTOR		
Q353			2SD2012	TRANSISTOR		
Q354			2SB1375	TRANSISTOR		
Q355			2SD2012	TRANSISTOR		
Q356			2SB1375	TRANSISTOR		
MECHANISM (X92-1800-10)						
1	1B	*	B03-2830-04	DRESSING PLATE		
2	1A	*	D02-0115-14	TURNTABLE PLATTER ASSY		
3	1B	*	D10-3307-04	ROD		
4	1B,2B	*	D10-3338-04	ROD		
5	2A		D13-0926-04	GEAR		
7	1A	*	D13-1522-04	LACK (GEAR)		
8	2B	*	D13-1523-04	LACK (GEAR)		
9	3A		D15-0293-08	PULLEY		
11	3A	*	D16-0339-05	BELT		
12	2B	*	D13-1521-04	GEAR ASSY		
14	3A	*	E35-0558-05	WIRING HARNESS		
17	2B	*	G01-3506-04	COMPRESSION SPRING		
18	1B	*	G01-3548-04	COMPRESSION SPRING		
19	2B		G10-0146-04	NON-WOVEN FABRIC		
21	3B	*	G13-0288-08	CUSHION		
22	1B	*	G16-0800-04	SHEET		

L:Scandinavia K:USA P:Canada
Y:PX(Far East, Hawaii) T:England E:Europe
Y:AAFES(Europe) X:Australia M:Other Areas

⚠ indicates safety critical components.

* New Parts
Parts without Parts No. are not supplied.
Les articles non mentionnes dans le Parts No. ne sont pas fournis.
Teile ohne Parts No. werden nicht geliefert.

⑭

Ref. No. 参照番号	Address 位置	New Parts 新	Parts No. 部品番号	Description 部品名／規格	Destination 仕向	Remarks 備考
23	2A		J19-0306-05	LEAD HOLDER		
24	2A,2B	*	J21-5926-04	MOUNTING HARDWARE		
25	3B	*	J21-5951-08	MOUNTING HARDWARE ASSY		
26	1B	*	J19-3537-05	HOLDER		
28	2A,2B		S33-1022-05	LEVER SWITCH		
DM	3A	*	T42-0617-05	DC MOTOR (DISK)		
FM	3B	*	T42-0641-05	MOTOR ASSY (FEED)		
PU	2B		T25-0015-05	OPTICAL PICKUP HEAD		

L:Scandinavia K:USA P:Canada
Y:PX(Far East, Hawaii) T:England E:Europe
Y:AAFES(Europe) X:Australia M:Other Areas

⚠ indicates safety critical components.

SPECIFICATIONS

Format

System ..... Compact disc digital audio system
Laser ..... Semiconductor laser
Number of channels 2channels
Playing rotation ..... 200rpm~500rpm (CLV)

D/A converters

D/A conversion 1Bit
Oversampling 8fs (352.8kHz)

General

Power consumption 40W
Dimensions ..... W : 476mm
H : 128mm
D : 430mm
Weight (Net) 20kg

Audio

Frequency response ..... 4Hz~20kHz, ±0.2dB
Signal to noise ratio ..... More than 108dB
Dynamic range ..... More than 100dB
Total harmonic distortion ..... Less than 0.001% (at 1kHz)
Channel separation ..... More than 100dB (at 1kHz)
Wow & flutter ..... unmeasurable limit
Output level/impedance
Variable 2.5V/0.1Ω
Digital output
Coaxial 0.5Vp-p/75Ω
Optical ..... −15dBm~−21dBm (wave length 660nm)

Note : KENWOOD follows a policy of continuous advancements in development. For this reason specifications may be changed without notice.

Note :
Component and circuitry are subject to modification to insure best operation under differing local conditions. This manual is based on, the Europe (E) standard, and provides information on regional circuit modification through use of alternate schematic diagrams, and information on regional component variations through use of parts list.

KENWOOD CORPORATION
Alive Mitake, 2-5, 1-chome Shibuya, Shibuya-ku, Tokyo 150, Japan
KENWOOD SERVICE CORPORATION
P.O. BOX 22745, 2201 East Dominguez St., Long Beach, CA 90801-5745, U.S.A.
KENWOOD ELECTRONICS CANADA INC.
6070 Kestrel Road, Mississauga, Ontario, Canada L5T 1S8
KENWOOD ELECTRONICS LATIN AMERICA S.A.
P.O. BOX 55-2791, Piso 6 Plaza Chase, Cl. 47 y Aquilino de la Guardia, Panama, Republic de Panama
TRIO-KENWOOD U.K. LIMITED
KENWOOD House, Dwight Road, Watford, Herts., WD1 8EB United Kingdom
KENWOOD ELECTRONICS BENELUX N.V.
Mechelsesteenweg 418 B-1930 Zaventem, Belgium
KENWOOD ELECTRONICS DEUTSCHLAND GMBH
Rembrücker-Str. 15, 63150 Heusenstamm, Germany
TRIO-KENWOOD FRANCE S.A.
13 Boulevard Ney, 75018 Paris, France
KENWOOD ELECTRONICS ITALIA S.p.A.
Via G. Sirtori, 7/9 20129 Milano, Italy
KENWOOD ESPAÑA S.A.
Bolivia, 239-08020 Barcelona, Spain
KENWOOD ELECTRONICS AUSTRALIA PTY. LTD. (A.C.N. 001 499 074)
P.O. BOX 504, 8 Figtreel Drive, Australia Centre, Homebush, N.S.W. 2140, Australia
KENWOOD & LEE ELECTRONICS, LTD.
Unit 3712-3724, Level 37 Tower 1, Metroplaza, 223 Hing Fong Road, Kwai Fong N.T. Hong Kong
KENWOOD ELECTRONICS SINGAPORE PTE LTD.
No. 1 Genting Lane #07-00, KENWOOD Building, Singapore, 1334

1993-4/1993-12 (O) 965