COMPACT DISC STEREO SYSTEM

RXD-C2/L

SERVICE MANUAL

(UD-202 main unit)

KENWOOD

© 1994-10 PRINTED IN KOREA
B51-4991-00(K) 2706

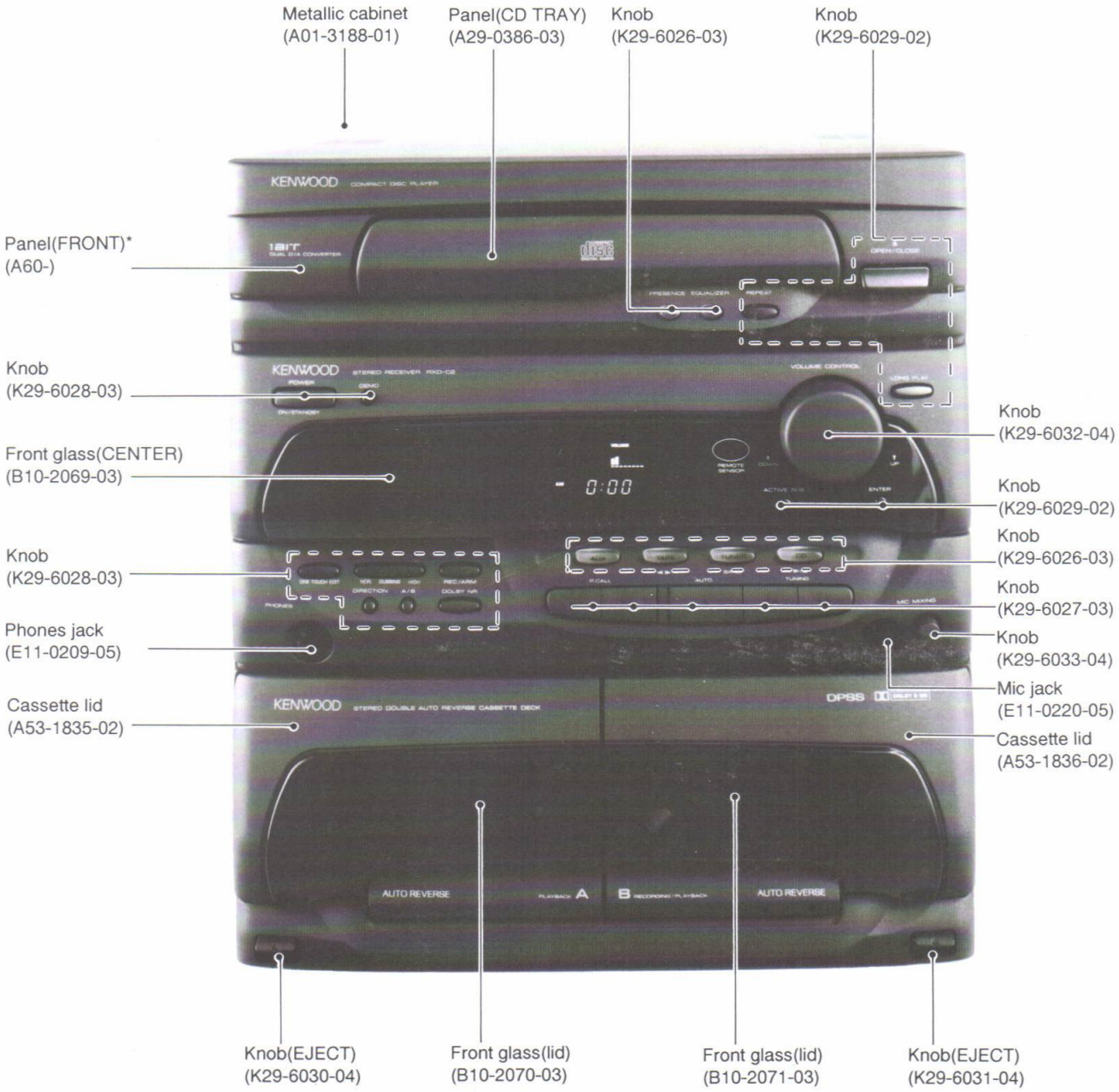

Photo is RXD-C2 M type.

*Refer to parts list on page 59.

PRECATIONS FOR REPAIR

- For the operation of the cassette mechanism, see Service Manual (B51-4869-00) of RXD-C3/C3L.

CONTENTS/ACCESSORIES

System configuration

SYSTEM NAME	MAIN UNIT	SPEAKER
UD-202	**RXD-C2/L**	LS-C2

System carton box

Destination	Parts No.
M (Singapore mode)	H60-0284-04
M(Chinese made)	H60-0285-04
X(Singapore made)	H60-0286-04
Y	H60-0287-04

Accessories

AM loop antenna assy .....(1)
(T90-0195-05)

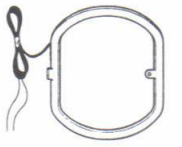

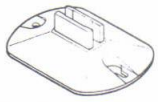

Loop antenna stand
(J19-3645-05)

FM indoor antenna .....(1)
(T90-0182-15)

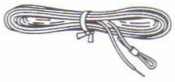

AC plug adaptor .....(1)
(Except for the U.S.A., Canada, Mexico, Europe, U.K. and Australia)
(E03-0115-05)

For the unit with a European AC plug in areas other than Europe.

Antenna adaptor .....(1)
(For U.K. and Europe)
(T90-0198-05)

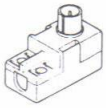

Batteries(R6/AA) .....(2)

Remote control unit .....(1)
(A70-1004-05) : RC-C2

Battery cover : (A09-0170-08)

Beware of condensation

When water vapor comes into contact with the surface of a cold material, condensation is produced.
If condensation occurs, correct operation may not be possible, or the unit may not function correctly.
This is not a malfunction, however, and the unit should be dried-out. (To do this, turn the POWER switch ON and leave the unit as it is for several hours.)

Be especially careful in the following conditions:
- When the unit is brought from a cold place to a warm place, and there is a large temperature difference.
- When a heater starts operating.
- When the unit is brought from an air-conditioned place to a place of high temperature with high humidity.
- When there is a large difference between the internal temperature of the unit and the ambient temperature, or in conditions where condensation occurs easily.

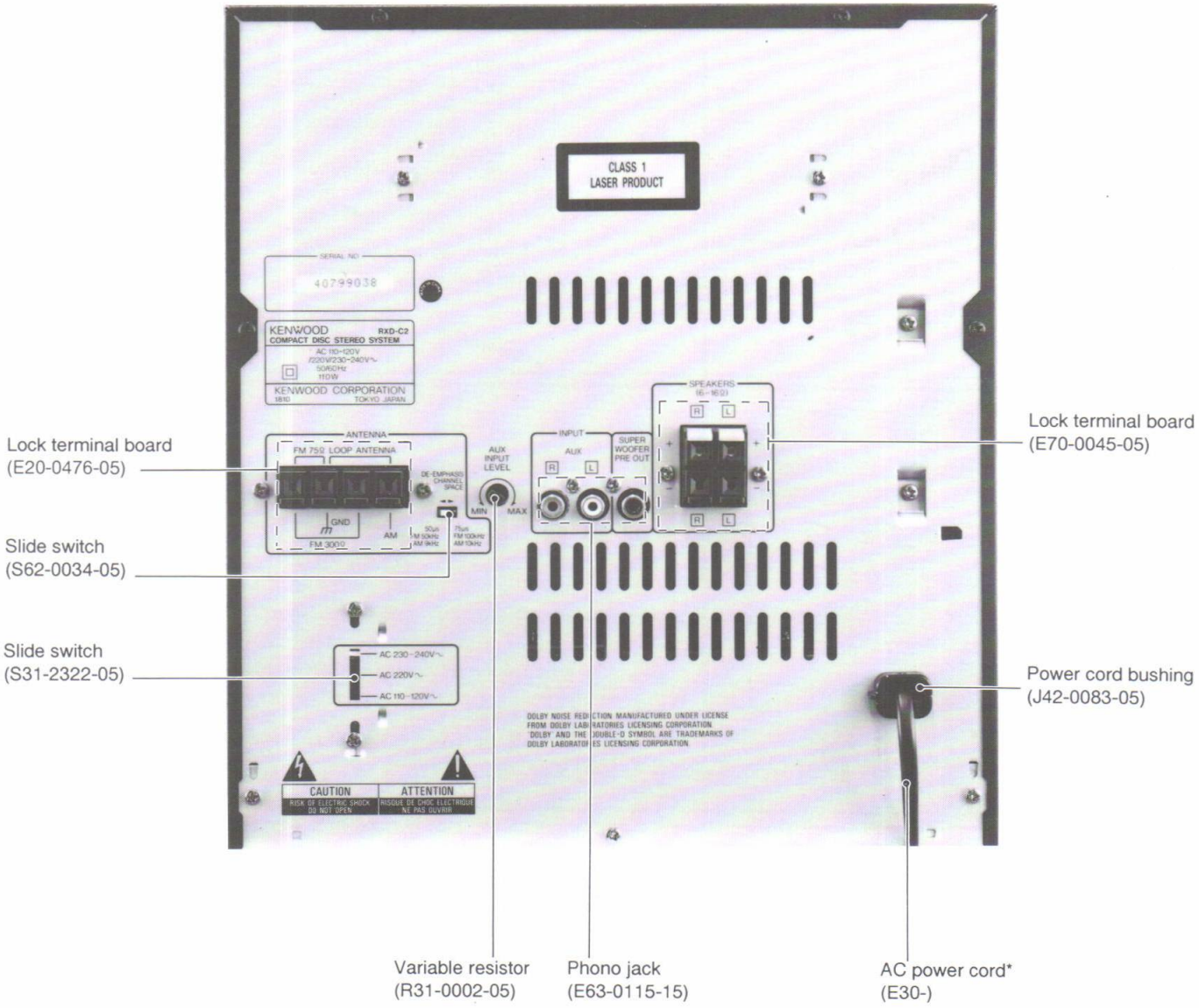

Photo is RXD-C2 M type.

*Refer to parts list on page 59.

RECEIVER UNIT

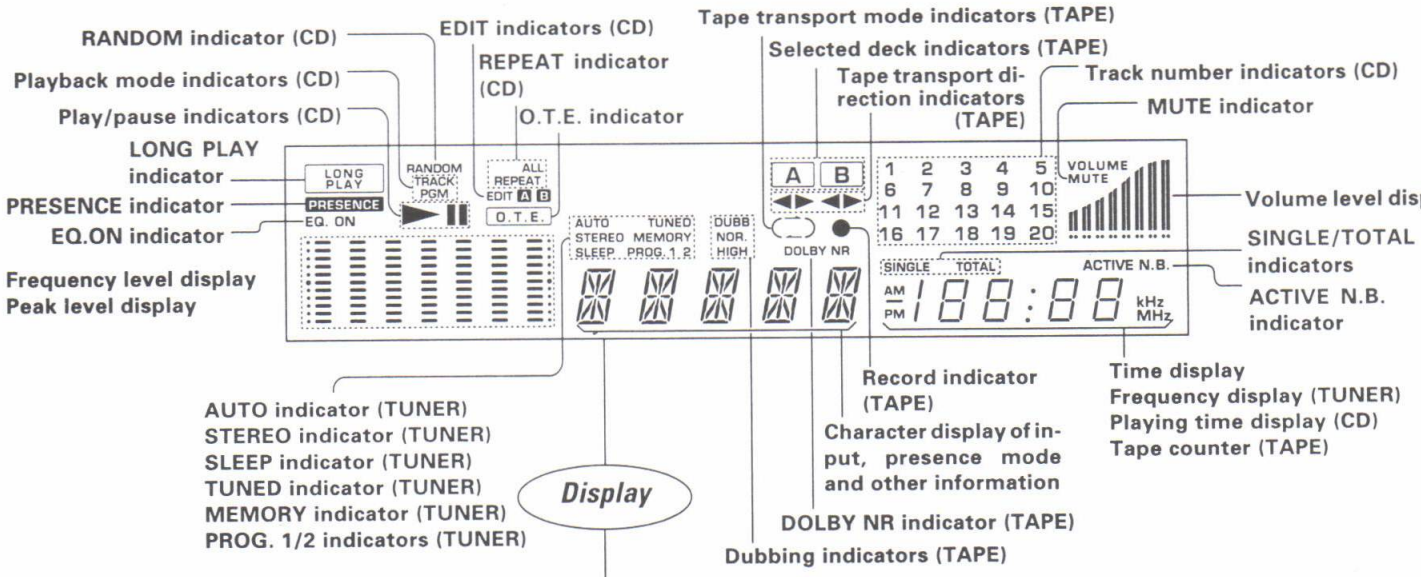

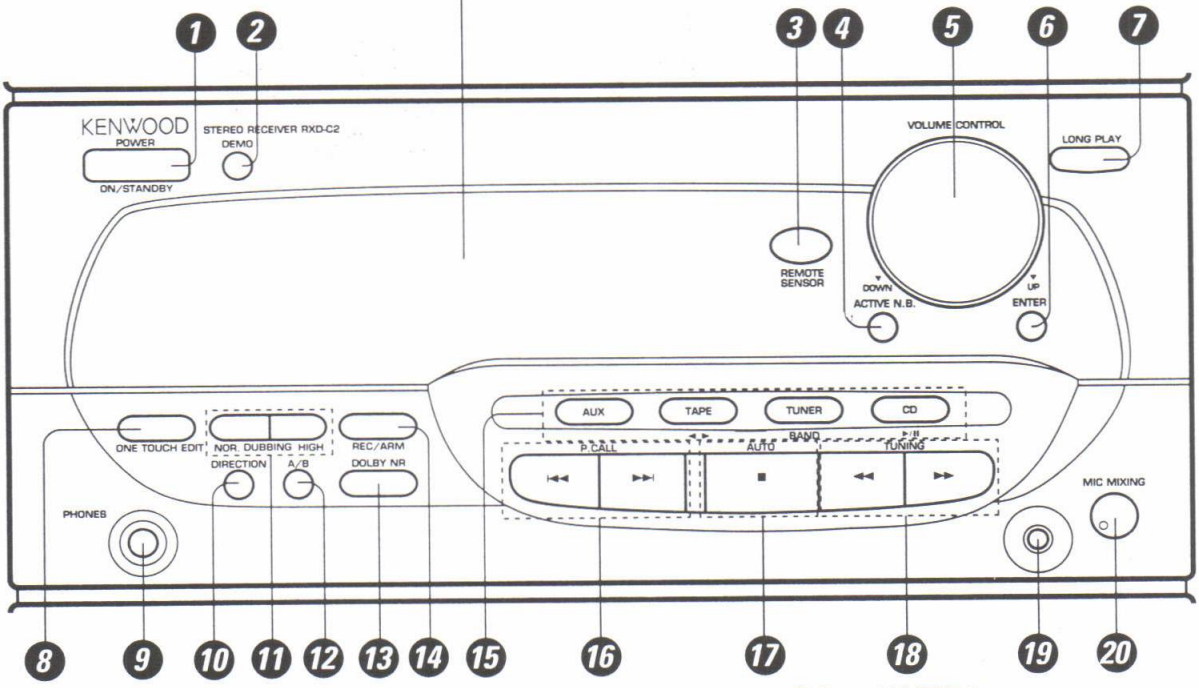

❶ POWER key
Press to turn the power of the system ON/OFF.

❷ DEMO key
Press to start demonstration.

❸ Remote control light sensor

❹ ACTIVE N.B. key

❺ VOLUME CONTROL knob

❻ ENTER key

❼ LONG PLAY mode key
Press to let the sound play for long hours.

❽ ONE TOUCH EDIT key
Press for simplified CD recording.

❾ PHONES jack
Insert headphones into this jack.

❿ DIRECTION switch key

⓫ DUBBING keys (HIGH, NOR.)
Press for tape dubbing.

⓬ Deck switch keys (A/B)
Press to select the deck to be operated.

⓭ DOLBY NR key

⓮ REC/ARM key

⓯ Input selector keys
CD: Functions as the play/pause key.
TAPE: Functions as the play key. Pressing during playback changes the tape transport direction.
TUNER: Functions as the BAND key.
AUX: Press to play the AUX input source.

⓰ Skip (P.CALL) keys
CD: Function as the skip keys.
TAPE: Function as the skip key. to search the beginning of music programs.
TUNER: Function as the P.CALL keys.
When power is OFF:
Used to adjust the clock or timer operation.

⓱ Stop (AUTO) key
CD, TAPE: Functions as the stop key.
TUNER: Functions as the AUTO key.
When power is OFF:
Activates the clock adjustment mode.

⓲ Fast winding (TUNING) keys
CD, TAPE: Function as the fast forward/backward keys.
TUNER: Function as the TUNING keys.
When power is OFF:
Used to set the timer.

⓳ MIC jack

⓴ MIC MIXING control knob

CD PLAYER/ CASSETTE DECK UNIT

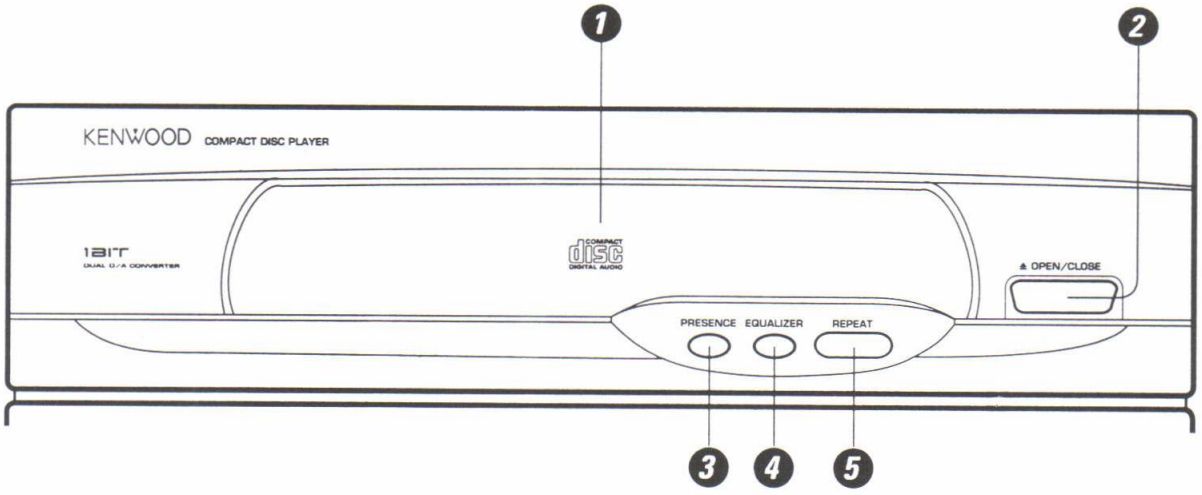

❶ **Disc tray**
❷ **OPEN/CLOSE key**
❸ **PRESENCE key**
Press for presence play.

❹ **EQUALIZER key**
Press to select a graphic equalizer pattern.
❺ **REPEAT key**
Press to play CD track(s) repeatedly.

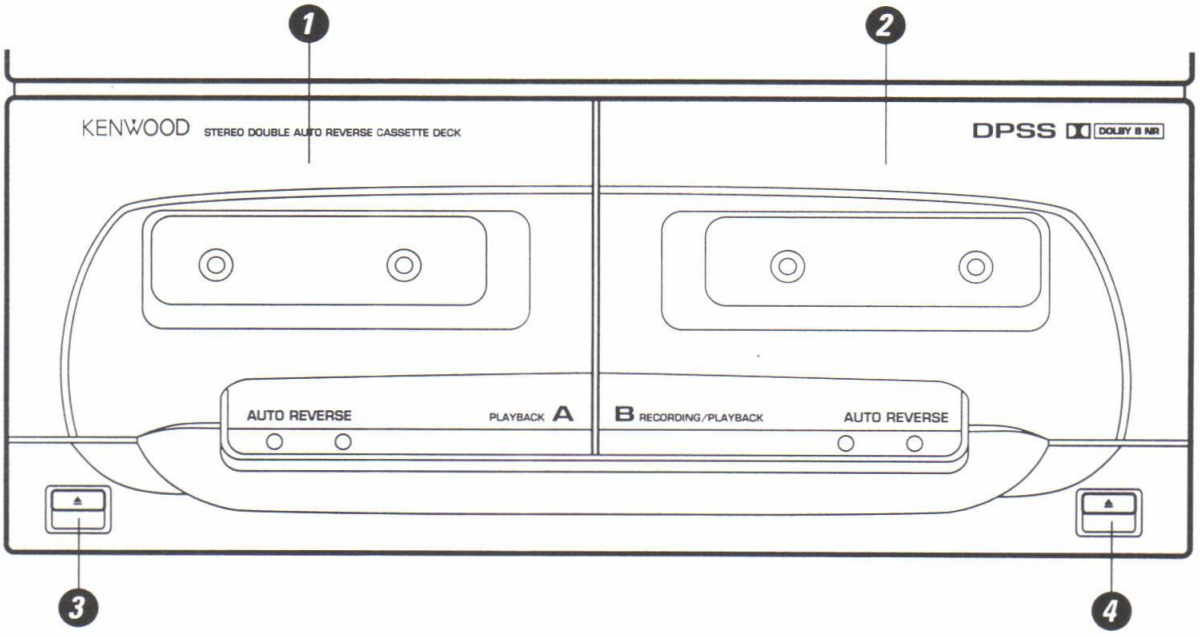

❶ **Deck A cassette holder**
❷ **Deck B cassette holder**

❸ **Deck A eject key**
❹ **Deck B eject key**

REMOTE CONTROL UNIT

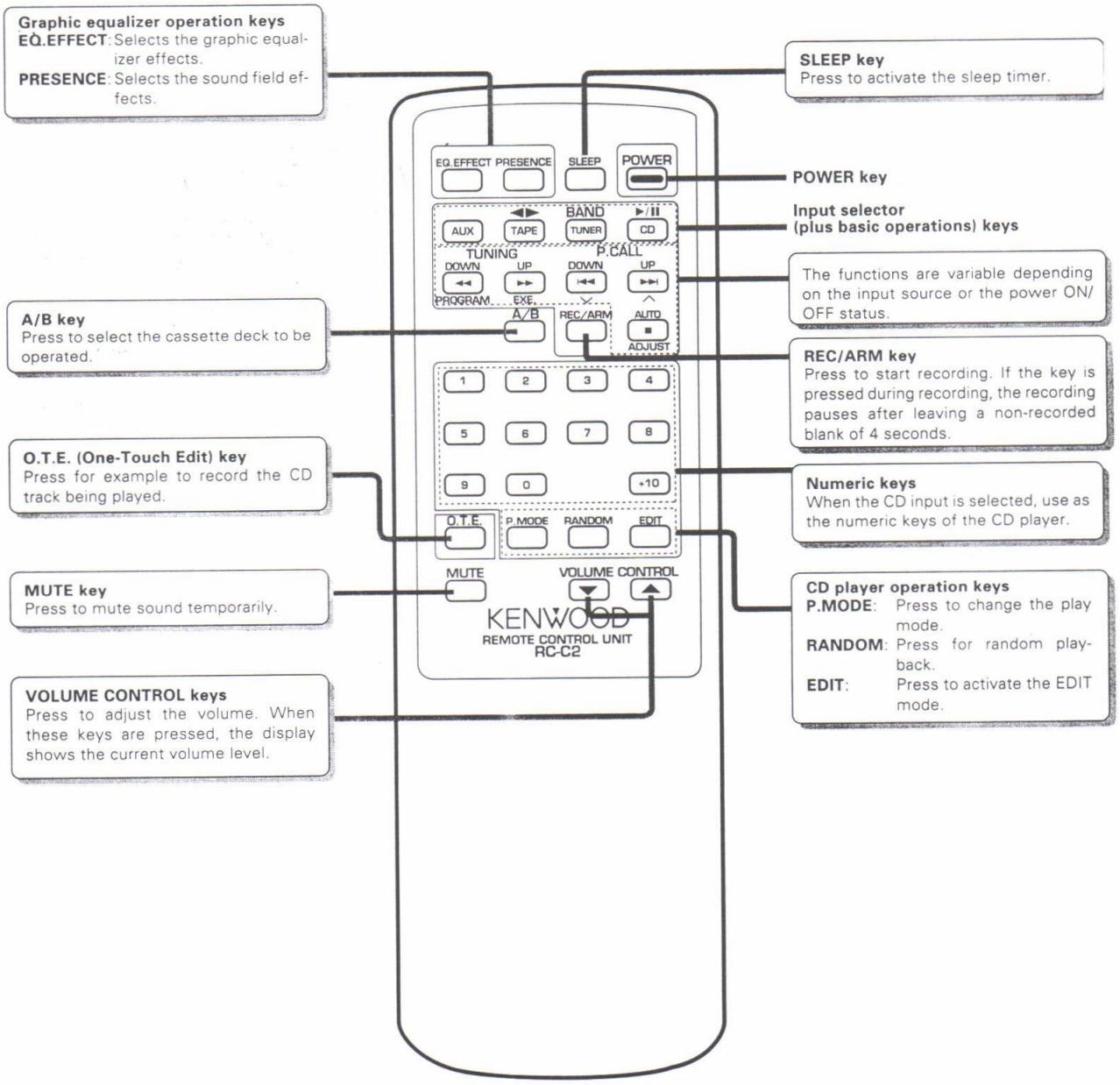

RXD-C2/L

DISASSEMBLY FOR REPAIR

1. How to Remove Clamper

1. Remove the cabinet.
2. Remove both-sides-catchers of clamper ass'y and slide it backwards.
3. Lift the clamper ass'y.

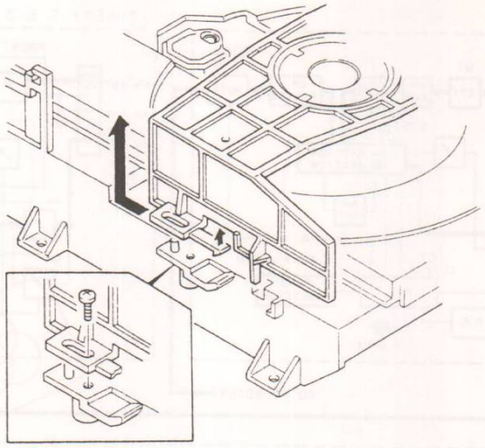

2. How to Remove Tray

1. Turn power switch off after tray is open.
2. Remove screw (❶).
3. Lift the tray (❷).
4. Slide the tray frontwards and remove it (❸).

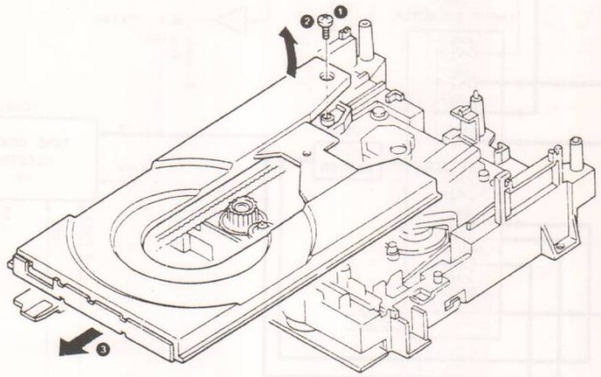

3. How to Mount Tray

1. Slide slider fully rightwards and pull out tray gear frontwards (❶).
2. Insert tray gear in slit of tray (❷).
3. Set tray-back-groove to boss of slider (❸).
4. Fix tray with screw (❹).

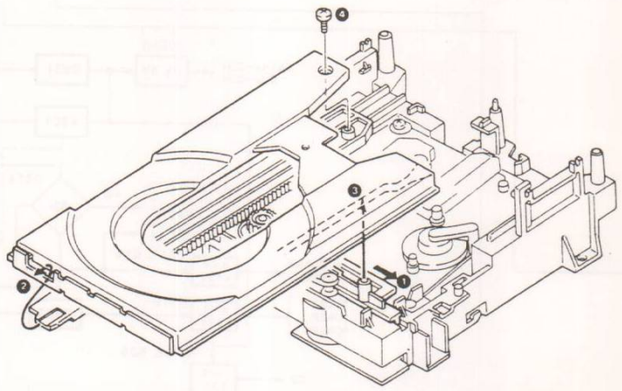

DISASSEMBLY FOR REPAIR

4. How to Replace Pickup

1. Remove clamper ass'y and set tray-open.
2. Move pickup at center position of its all travel (❶).
3. Turn rod stopper (❷) and lift pickup ass'y (❸).

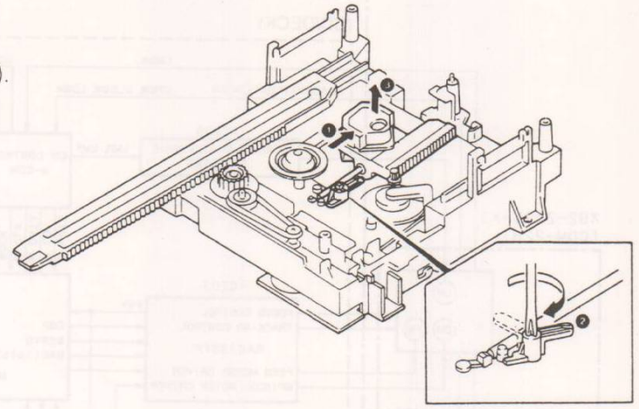

5. How to Open Tray when Tray Not Come Out

1. Insert screw driver to left-side hole of mechanism ass'y.
2. Push slider rightwards.

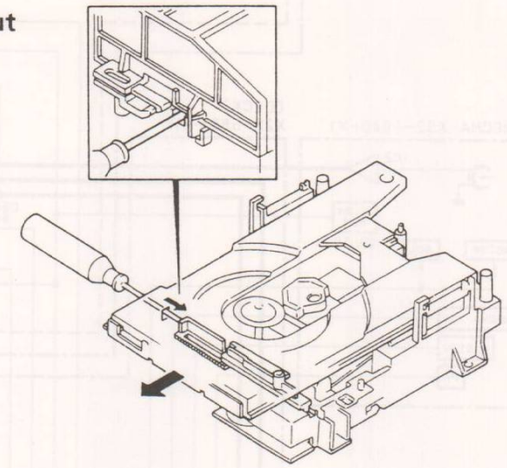

RXD-C2/L RXD-C2/L

BLOCK DIAGRAM

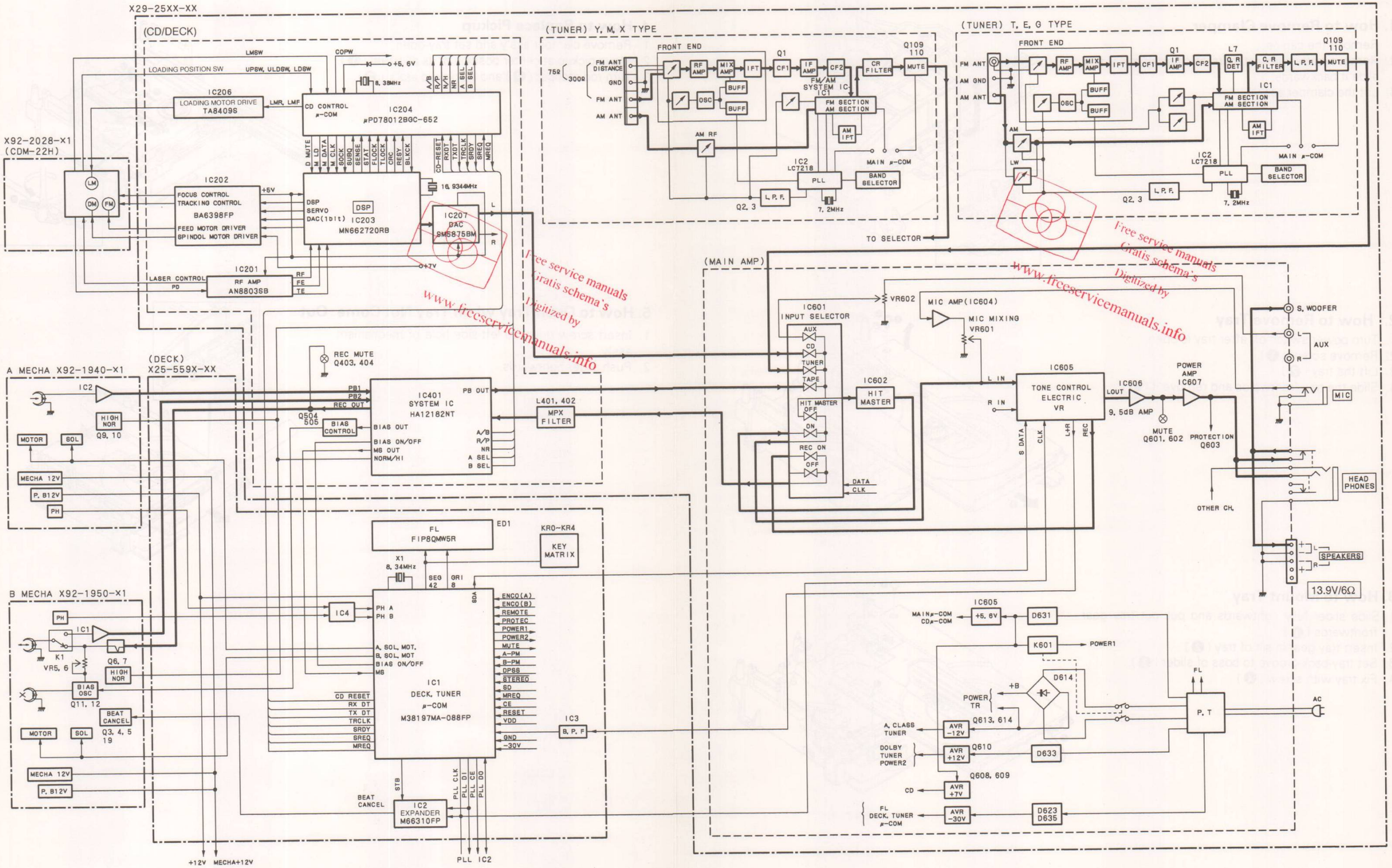

CIRCUIT DESCRIPTION

Microproccesor periphery block diagram

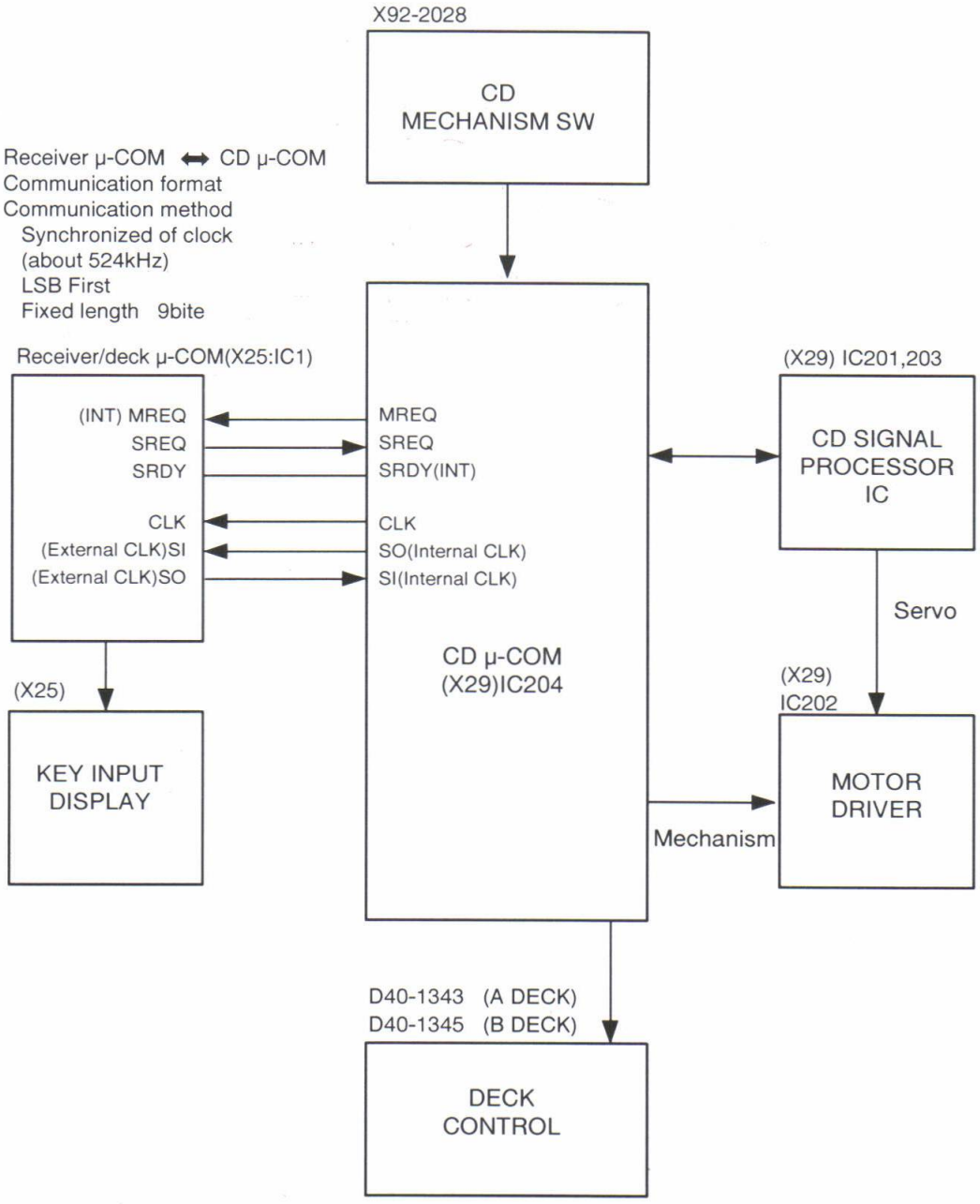

CIRCUIT DESCRIPTION

CD microprocessor : μPD78012BGC-652(X29 : IC204)

1. Pin connection diagram

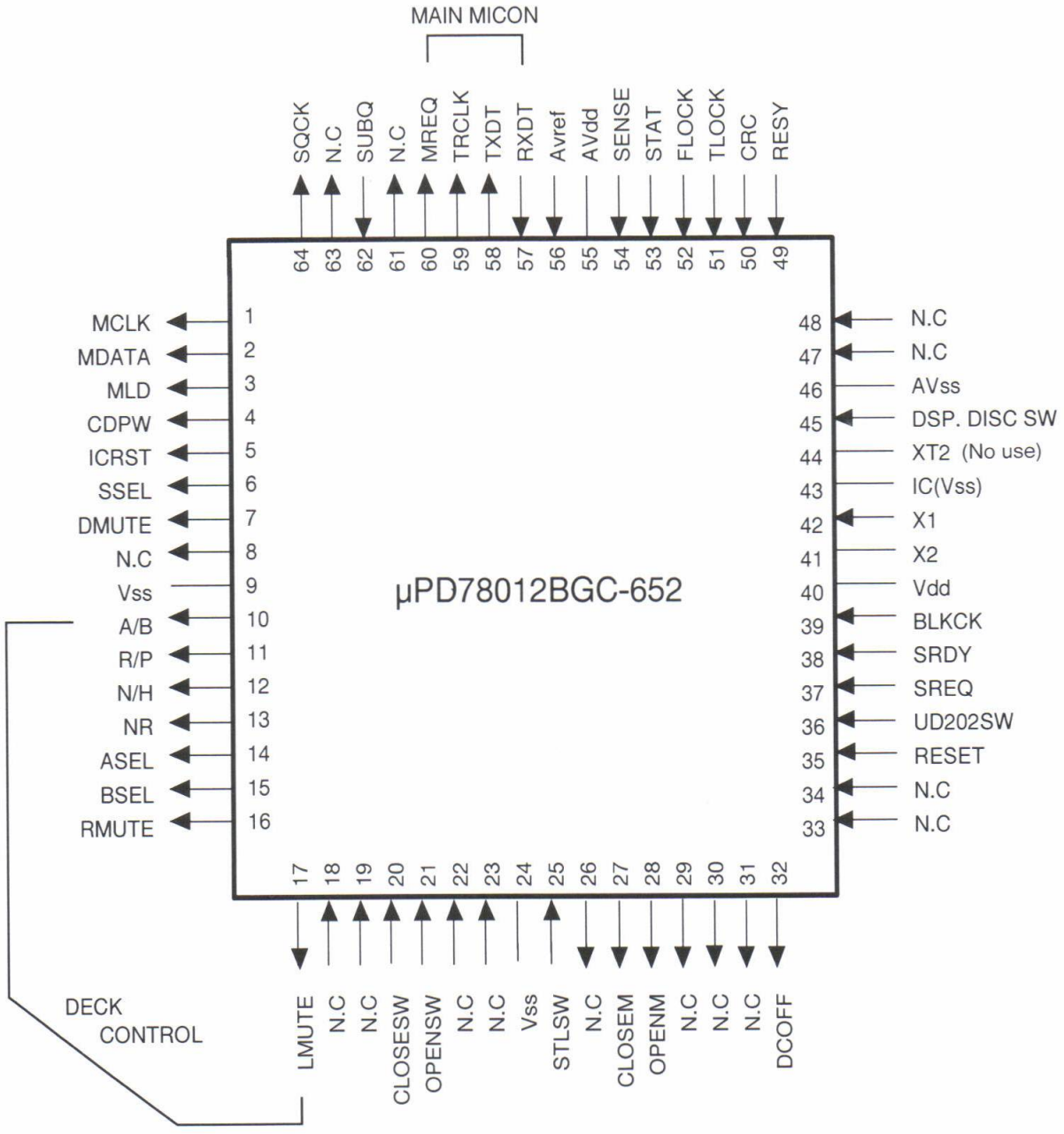

N.C : PULL DOWN

CIRCUIT DESCRIPTION

2. Pin description

Pin No.	Name	I/O	Description
1	MLCK	O	Signal processing IC clock
2	MDATA	O	Signal processing IC data
3	MLD	O	Signal processing IC latch
4	CDPW	O	Signal processing IC power regulation
5	ICRST	O	Signal processing IC reset
6	SSEL	O	Signal processing IC SSEL reguration
7	DMUTE	O	Digital mute
8	N.C	O	
9	Vss		
10	A/B	O	Deck regulation A/B switch
11	R/P	O	Deck reguration RECORD/PLAY
12	N/H	O	Deck reguration NORMAL/HIGH
13	NR	O	Deck reguration NOISE REDUCTION
14	ASEL	O	Deck reguration A SELECT
15	BSEL	O	Deck reguration B SELECT
16	RMUTE	O	Deck reguration REC MUTE
17	LMUTE	O	Deck reguration LINE MUTE
18	N.C	I	
19	N.C	I	
20	CLOSESW	I	Mechanism close switch
21	OPENSW	I	Mechanism open switch
22	N.C	I	Mechanism stop switch
23	N.C	I	Mechanism position switch
24	Vss		GND
25	SLTSW	I	Mechanism start limit switch
26	N.C	O	
27	CLOSEM	O	Close motor forward
28	OPENM	O	Open motor rewind
29	N.C	O	
30	N.C	O	
31	N.C	O	
32	DCOFF	O	DC servo ON/OFF control
33	N.C	O	
34	N.C	O	
35	RESET		Reset
36	UD202SW	I	UD202/UD302 choice H : UD202 L : UD302
37	SREQ	I	Microprocessor communications SREQ
38	SRDY	I	Microprocessor communications SRDY
39	BLKCK	I	Q Data synchronization clock
40	Vdd		+5V

CIRCUIT DESCRIPTION

Pin No.	Name	I/O	Description
41	X2	O	Clock(8.38MHz)
42	X1	I	Clock
43	IC		GND
44	XT2		No use
45	DSP. DISC SW	I	Connect Vss H : DISC display
46	AVss		A/D GND
47	N.C	O	
48	N.C	O	
49	RESY	I	Spindle servo lock signal
50	CRC	I	Q data CRC check signal
51	TLOCK	I	Tracking lock signal
52	FLOCK	I	Focus lock signal
53	STAT	I	Signal processing IC status signal
54	SENSE	I	Signal processing IC sensing signal
55	AVdd		A/D power supply
56	AVref		A/D reference
57	RXDT	I	Microprocessor communications reception data
58	TXDT	O	Microprocessor communications transmission data
59	TRCLK	O	Microprocessor communications clock
60	MREQ	O	Microprocessor communications MREQ
61	N.C	O	
62	SUBQ	I	Q data
63	N.C	O	
64	SQCK	O	Q data clock

3. Test mode

1. CD test mode input method
   While depressing the CD key, plug the power cord into an AC power outlet.

2. Operations after entering test mode
   •When test mode is entered
   a. The tray opens
   •When the CD(PLAY) key is pressed while the tray is open
   a. The tray closes
   b. Tracks N01, 2, 32 play
   c. STOP

3. How to clear test mode
   •Turn off the power.
   •Press the tray open/close key.

4. Description of keys

No	Key	Operation	Display
1	STOP	STOP operation Displays the automatic adjustment results The value of the F/T balance adjustment (in 256 increments) is converted to 1–9. NG : 1,9 The F/T gain is a multiple NG : F ≦2, or ≧11 NG : T 0 or ≧7	Changes T NO :01→ T NO:00 Time display section 8 8 : 8 8 F T F T Balance Gain In NG, blinks
2	CD►	PLAY operation PLAY tracks No,1, 2, 32	TNO : 05
3	REPEAT	Tracking off Sled off	TNO : 03
4	FF	PLAY track No.32	TNO : 02

CIRCUIT DESCRIPTION

Receiver/Deck Microprocessor : M38197MA-088FP(X25 : IC1)

1. Pin connection diagram

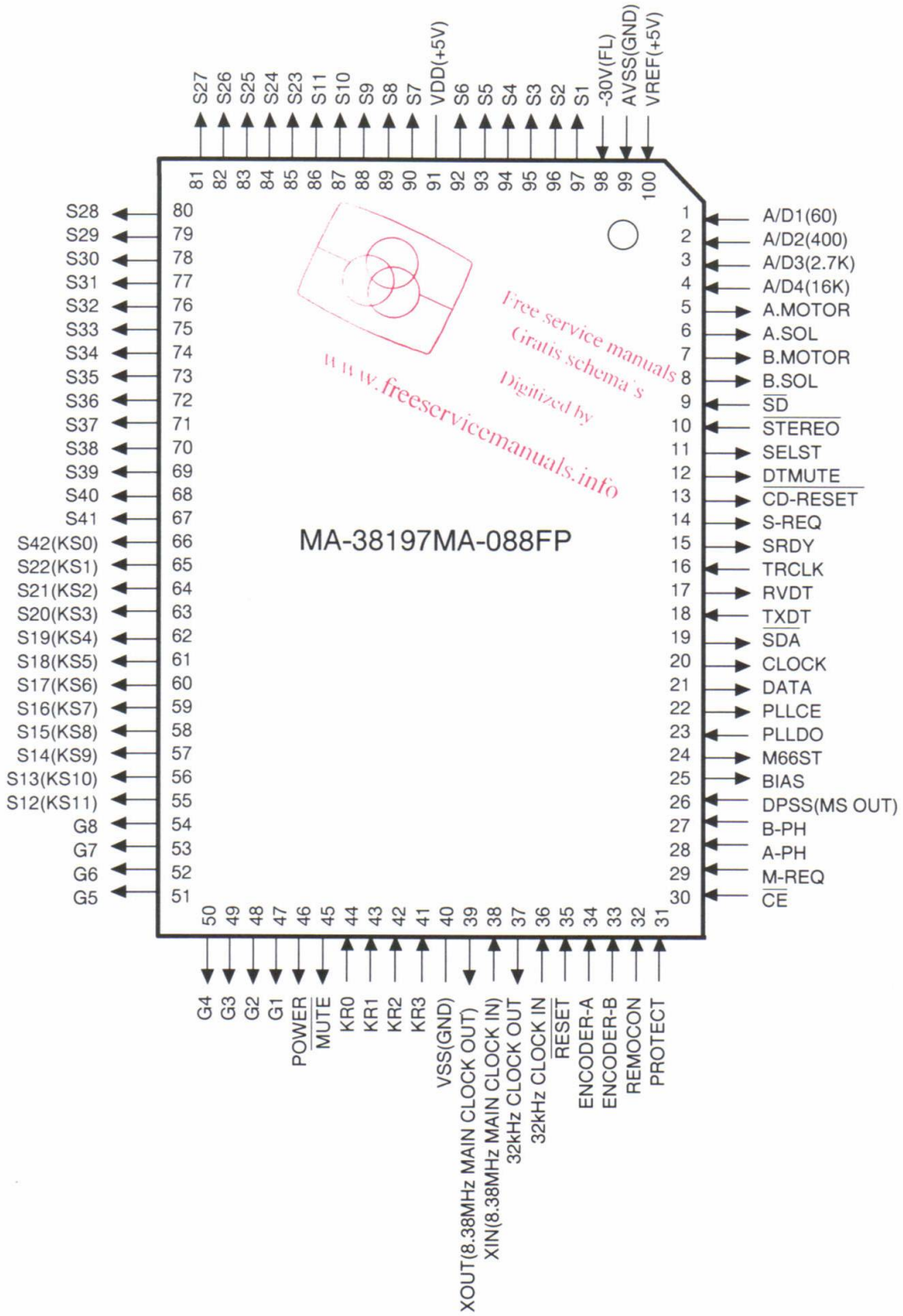

CIRCUIT DESCRIPTION

2. Key Matrix

	KEY RETURN 0 (44)	KEY RETURN 1 (43)	KEY RETURN 2 (42)	KEY RETURN 3 (41)
KS0(66)	POWER ON/STANDBY	—	DEMO	—
KS1(65)		REC/ARM	HIGH	NORMAL
KS2(64)	A/B	DIRECTION	DOLBY NR	ONE TOUCH EDIT
KS3(63)	PACK(A)	CrO_2(A)	PLAY(A)	F • REC • INH
KS4(62)	DSW 0	DSW 1	DSW 2	—
KS5(61)	—	—	—	CD • REPEAT
KS6(60)	DISC • SKIP	OPEN/CLOSE	LONG • PLAY	—
KS7(59)	PACK(B)	CrO_2(B)	PLAY(B)	R • REC • INH
KS8(58)	PRESENCE	EQUALIZER	ENTER	ACTIVE N.B
KS9(57)		■	◄◄	►►
KS10(56)	AUX	TAPE	TUNER	CD
KS11(55)	TEST	—	—	—

( ) is Pin No.

3. Pin description

Pin No.	Name	I/O	Description		
1	A/D1(60Hz)	I	Spectrum analyzer 60 Hz analog input		
2	A/D2(400Hz)	I	Spectrum analyzer 400 Hz analog input		
3	A/D(2.7kHz)	I	Spectrum analyzer 2.7 kHz analog input		
4	A/D4(16kHz)	I	Spectrum analyzer 16kHz analog input		
5	A.MOTOR	O	A deck capstan motor regulation	H: ON	
6	A.SOL	O	A deck solenoid regulation	H: ON	
7	B.MOTOR	O	B deck capstan motor regulation	H: ON	
8	B.SOL	O	B deck solenoid regulation	H: ON	
9	$\overline{SD}$	I	Tuner SD input	L: Tuned	H: Not tuned
10	$\overline{STEREO}$	I	Tuner stereo input	L: Stereo	H: Mono
11	SELST	O	Selector IC (TC9614N) strobe output		
12	DTMUTE	O	Selector IC (TC9614N) data mute		
13	$\overline{CD\text{-}RESET}$	O	CD microprocessor reset signal output	L: Reset	
14	S-REQ	O	Slave transmission request signal output (For receiver↔microprocessor communications)	H: Request	
15	SRDY	O	Transmission signal possible signal output (For receiver↔microprocessor communications)		
16	TRCLK	I	Communications clock input (For receiver↔ microprocessor communications)		
17	RVDT	O	Slave serial data output (For receiver↔ microprocessor communications)		
18	TXDT	I	Master serial data input (For receiver↔ microprocessor communications)		
19	$\overline{SDA}$	O	Surround IC (μPC1853) DATA output		
20	CLOCK	O	Surround IC (μPC1853), Expander IC (M66310FP), PLL IC (LC7218), Selector IC (TC9164N) Clock output (common-use)		

CIRCUIT DESCRIPTION

Pin No.	Name	I/O	Description
21	DATA	O	Expander IC (M66310FP), PLL IC (LC7218), Selector IC (TC9164N) DATA output (common-use)
22	PLLCE	O	PLL IC (LC7218) CE output H: Enable L: Disable
23	PLLDO	I	PLL IC (LC7218) IF COUNT input
24	M66ST	O	Expander IC (M66310FP)strobe output
25	BIAS	O	Bias oscillation regulation H: Oscillation
26	DPSS(MS OUT)	I	DPSS (search) sensitivity input L: Detect between tracks H: Detect presence of tracks
27	B-PH	I	B deck photo sensor input
28	A-PH	I	A deck photo sensor input
29	M-REQ	I	Master transmission request signal output H: Request (For receiver ↔ microprocessor communications)
30	$\overline{CE}$	O	Backup detection L: Backup H: Normal
31	PROTECT	I	Protection detection H: Protect ON L: Normal
32	REMOCON	I	Remote controller input
33	ENCODER B	I	Rotary encoder input B
34	ENCODER A	I	Rotary encoder input A
35	$\overline{RESET}$	I	Reset signal input L: Reset
36	XCIN	I	Clock-use clock signal input 32kHz quartz crystal connected
37	XCOUT	O	Clock-use clock signal output 32kHz quartz crystal connected
38	XIN	I	Main clock input 8.38 MHz ceramic oscillator connected
39	XOUT	O	Main clock output 8.38 MHz ceramic oscillator connected
40	VSS		GND connector Connect to GND
41	KR3	I	Key return signal input 3
42	KR2	I	Key return signal input 2
43	KR1	I	Key return signal input 1
44	KR0	I	Key return signal input 0
45	$\overline{MUTE}$	O	Mute regulation L: Mute ON H: Mute OFF
46	POWER	O	Power regulation H: Power ON L: Power OFF
47	G1	O	FL G1 grid drive connector
48	G2	O	FL G2 grid drive connector
49	G3	O	FL G3 grid drive connector
50	G4	O	FL G4 grid drive connector
51	G5	O	FL G5 grid drive connector
52	G6	O	FL G6 grid drive connector
53	G7	O	FL G7 grid drive connector
54	G8	O	FL G8 grid drive connector
55	S12	O	FL S12 segment drive connector and key scan signal output 11
56	S13	O	FL S13 segment drive connector and key scan signal output 10
57	S14	O	FL S14 segment drive connector and key scan signal output 9
58	S15	O	FL S15 segment drive connector and key scan signal output 8
59	S16	O	FL S16 segment drive connector and key scan signal output 7 (B deck common)
60	S17	O	FL S17 segment drive connector and key scan signal output 6
61	S18	O	FL S18 segment drive connector and key scan signal output 5
62	S19	O	FL S19 segment drive connector and key scan signal output 4 (Tuner dispatch)
63	S20	O	FL S20 segment drive connector and key scan signal output 3 (A deck common)

CIRCUIT DESCRIPTION

Pin No.	Name	I/O	Description
64	S21	O	FL S21 segment drive connector and key scan signal output 2
65	S22	O	FL S22 segment drive connector and key scan signal output 1
66	S42	O	FL S42 segment drive connector and key scan signal output 0
67	S41	O	FL S41 segment drive connector
68	S40	O	FL S40 segment drive connector
69	S39	O	FL S39 segment drive connector
70	S38	O	FL S38 segment drive connector
71	S37	O	FL S37 segment drive connector
72	S36	O	FL S36 segment drive connector
73	S35	O	FL S35 segment drive connector
74	S34	O	FL S34 segment drive connector
75	S33	O	FL S33 segment drive connector
76	S32	O	FL S32 segment drive connector
77	S31	O	FL S31 segment drive connector
78	S30	O	FL S30 segment drive connector
79	S29	O	FL S29 segment drive connector
80	S28	O	FL S28 segment drive connector
81	S27	O	FL S27 segment drive connector
82	S26	O	FL S26 segment drive connector
83	S25	O	FL S25 segment drive connector
84	S24	O	FL S24 segment drive connector
85	S23	O	FL S23 segment drive connector
86	S11	O	FL S11 segment drive connector
87	S10	O	FL S10 segment drive connector
88	S9	O	FL S9 segment drive connector
89	S8	O	FL S8 segment drive connector
90	S7	O	FL S7 segment drive connector
91	V_{DD}		Power supply input (+5V)
92	S6	O	FL S6 segment drive connector
93	S5	O	FL S5 segment drive connector
94	S4	O	FL S4 segment drive connector
95	S3	O	FL S3 segment drive connector
96	S2	O	FL S2 segment drive connector
97	S1	O	FL S1 segment drive connector
98	V_{EE}	I	Pull-down power supply input (for FL) Connected to -30V
99	AV_{SS}	I	Analog power supply input Connected to GND
100	V_{REF}	I	A/D converter reference voltage input Connected to +5V

CIRCUIT DESCRIPTION

4. Conditions by Description

Destination Type	Diode switches(DSW) DSW2 D43	DSW1 D40	DSW0 D39	Band	Receiving frequency range	Interchannel space	Intermediate frequency	PLL reference frequency	PLL(X29 : IC2 LA7218) output port ⑨	⑩	⑪	⑫	⑬	⑭	⑮
K1(1700)	0	0	0	FM	87.5~108.0MHz	100kHz	+10.7MHz	25kHz	m	i	H	L	H	H	H
				AM	530~1700kHz	10kHz	+450kHz	10kHz	m	i	H	H	L	H	H
K2(1610)	0	0	1	FM	87.5~108.0MHz	100kHz	+10.7kHz	25kHz	m	i	H	L	H	H	H
				AM	530~1610kHz	10kHz	+450kHz	10kHz	m	i	H	H	L	H	H
E1	0	1	1	FM	87.5~108.0kHz	50kHz	+10.7kHz	25kHz	m	i	H	L	H	H	H
				AM	531~1602kHz	9kHz	+450kHz	9kHz	m	i	H	H	L	H	H
E2(LW)	1	0	0	FM	87.5~108.0MHz	50kHz	+10.7MHz	25kHz	m	i	H	L	H	H	H
				MW	531~1602kHz	9kHz	+450kHz	9kHz	m	i	H	H	L	H	H
				LW	153~279kHz	9kHz	+450kHz	9kHz	m	i	H	H	H	L	H
M	0	X	1	Change K2/E1 by setting "DSW1" only. (DSW1= 0:K2 Type ; 1:E1 Type)											

* Diode switch(DSWx) : 0=Without diode(in the case of static, LOW input)
  1=With diode(in the case of static, HIGH input)
  X=Transistor switch(0=OFF/ 1=ON)

* Here the PLL reference frequency is the value set in PLL, the AM division ratio becomes the same as the PLL reference frequency, but the FM division ratio is twice the PLL frequency.

* When the diode switch destination is different from this chart, it becomes the K1 destination.

PLL port

m= H: AUTO STEREO
L: MONO

i= H : IF SIGNAL ON
L : IF SIGNAL OFF

5. Initialization(Reset)

Insert the AC plug into the outlet while holding down the ENTER key of main unit.

Initial stage

	State	
SYSTEM	POWER	OFF
CLOCK PROG.	CLOCK	STOP(AM0:00)
	PROG. Operation MODE	OFF
	PROG.1 : ON=AM0:00	OFF=AM0:00
	MOD=PLAY	SOC=TUNER(1ch)
	PROG.2 : ON=AM0:00	OFF=AM0:00
	MOD=PLAY	SOC=TUNER(1ch)
AMP	VOLUME	7SEG=7(μPC1853 VOLdata=10)
	SELECTOR	TUNER
	EQ.	OFF
	PRESENCE	OFF
	LONG PLAY	OFF
	ACTIVE N.B.	OFF
	MUTING	OFF
TUNER	BAND	FM
	Each last BAND	
	FM : P.ch= - - ch	FREQ=min(76.0 or 87.5MHz)
	AM(MW) : P.ch= - - ch	FREQ=min(530 or 531kHz)
	LW : P.ch= - - ch	FREQ=min(153kHz)
	P.CH Memory 1ch~20ch : Test frequency	(Refer to Test Frequency)
	Tuning MODE	AUTO (AUTO STEREO)
TAPE	A/B Selector	B
	A Deck Head position	For FWD
	B Deck Head position	For FWD
	DOLBY NR	OFF
	DIRECTION	ENDLESS
CD	DISC Selector	DISC 1
	REPEAT	OFF

6. Test Frequency(Maker's Memory Frequency)

Destination / PRESET	K WIDE BAND	K NARROW BAND	E With LW	E Without LW
1	FM 98.0MHz	FM 98.0MHz	FM 98.0MHz	FM 98.0MHz
2	FM108.0MHz	FM108.0MHz	FM108.0MHz	FM108.0MHz
3	AM 630kHz	AM 630kHz	AM 630kHz	AM 630kHz
4	AM 990kHz	AM 990kHz	AM 990kHz	AM 990kHz
5	AM 1440kHz	AM 1440kHz	AM 1440kHz	AM 1440kHz
6	AM 1610kHz	AM 1610kHz	AM 1602kHz	AM 1602kHz
7	AM 1700kHz	FM 87.5MHz	LW 162kHz	FM 87.5MHz
8	FM 87.5MHz	FM 87.5MHz	LW 216kHz	FM 87.5MHz
9	FM 87.5MHz	FM 87.5MHz	LW 270kHz	FM 87.5MHz
10	FM 89.1MHz	FM 89.1MHz	FM 89.1MHz	FM 89.1MHz
11	FM 87.5MHz	FM 87.5MHz	LW 279kHz	FM 87.5MHz
12	FM 90.0MHz	FM 90.0MHz	FM 90.0MHz	FM 90.0MHz
13	FM106.0MHz	FM106.0MHz	FM106.0MHz	FM106.0MHz
14	AM 530kHz	AM 530kHz	MW 531kHz	AM 531kHz
15	FM 87.5MHz	FM 87.5MHz	LW 153kHz	FM 87.5MHz
16	FM 97.5MHz	FM 97.5MHz	FM 97.5MHz	FM 97.5MHz
17	FM 98.5MHz	FM 98.5MHz	FM 98.5MHz	FM 98.5MHz
18	FM 87.5MHz	FM 87.5MHz	FM 87.5MHz	FM 87.5MHz
19	FM 87.5MHz	FM 87.5MHz	FM 87.5MHz	FM 87.5MHz
20	FM 87.5MHz	FM 87.5MHz	FM 87.5MHz	FM 87.5MHz

ADJUSTMENT

CD section

No.	ITEM	INPUT SETTING	OUTPUT SETTING	PLAYER SETTING	ALIGNMENT POINTS	ALIGN FOR	FIG.
Remove the clamper ass'y before step 1. And remount it after step 1.							
1	LASER POWER	—	Set the sensor section of the optical power meter on the pickup lens.	With pressing the P.MODE key, turn the power on to enter the test mode. Press the "CHECK" key to check that the display is"03".	—	On the power from 0.08 to 0.15mW, when the diffraction grating is correctly aligned with the RF level of 1.0Vp-p or more.	(a)
Cancel test mode and open the tray to load the disc.							
2	FOCUS ERROR	Test disc Type 4	Connect an oscilloscope as follows. CN207 Connect hot side to RF(No.①) Connect Ground to VREF(No.②)	Press the PLAY key.	FE BALANCE VR201	Adjust the waveform to better point.	(b)

(Note) Type 4 disc : SONY YDS-18 Test Disc or equivalent.

(a) Laser power

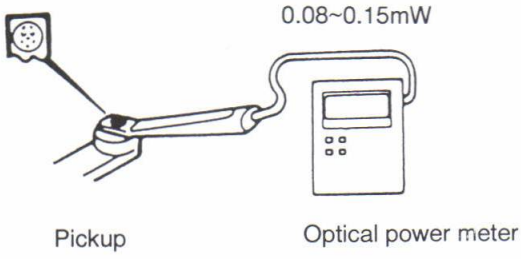

(b)

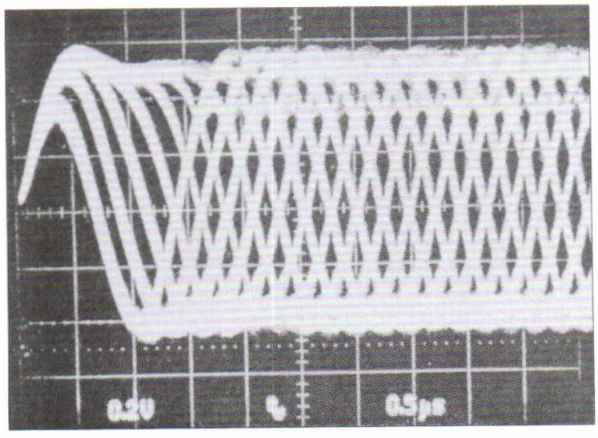

- RF signal in test mode(PLAY).
- Perform the tangential and focusing offset adjustment so that each of the center cross points are focused into one point on the display.
  The crossing points above and below the center shall also be displayed clearly.

AJUSTES

CD sección

No	ITEM	AJUSTES DE ENTRADA	AJUSTES DE SALIDA	AJUSTES DEL SINTONIZADOR	PUNTOS DE CALIBRACIÓN	CALIBRA R EN	FIG.
Quite la brazadera antes del paso 1 y vuelva a montarla después del 1.							
1	POTENCIA DEL LÁSER	—	Coloque la sección del sensor del medidor de potencia óptica en la lente del captor.	Active la alimentación eléctrica al tiempo que oprime la tecla P.MODE para acceder a la modalidad de prueba. Oprima la tecla "CHECK" para comprobar que la indicación es "03".	—	A una potencia de 0,08 a 0,15mV, la rejilla de difracción debe ester correctamente alineada, con un nivel de RF de 1,0Vp-p o más.	(a)
Cancelar la modalidad de prueba y abrir la bandeja para cargar el disco.							
2	ERROR DE ENFOQUE	Probar el disco tipo 4.	Conectar un osciloscopio como sigue.CN207 Conectar RD(No①) al lado con corriente Conectar VREF(No④) a masa.	Oprimir la tecla PLAY.	EQILIBRIO FE VR201	Ajustar al punto donde la forma de onda es óptima.	(b)

(Nota) : Disco tipo 4 : Disco de prueba SONY YDS-18 o equivalente.

(a) Potencia del láser

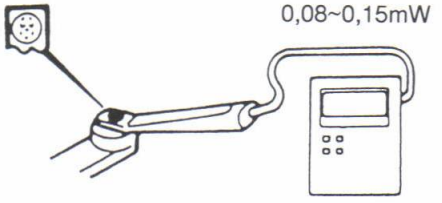

(b)

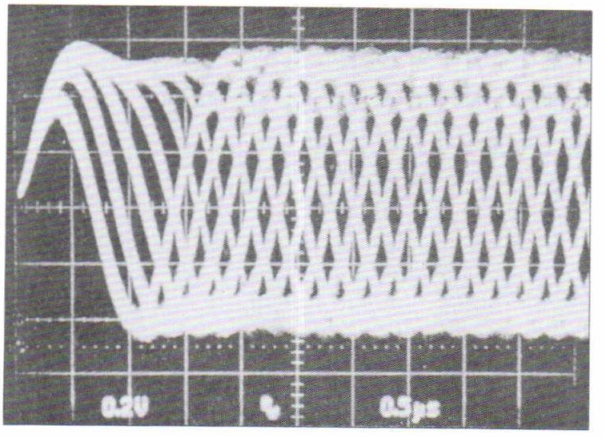

- Sefial RD en modo de prueba(reproducción).
- Realizar los ajustes de desviación tangencial y de enfoque de manera que cada una de las crucetas centrals se enfoquen en punto de la pantalla.
  Las crucetas que están encima debajo del centro deben también indicarse con claridad.

ADJUSTMENT

Cassette Deck section

No.	ITEM	INPUT SETTING	OUTPUT SETTING	DECK SETTING	ALIGNMENT POINTS	ALIGN FOR	FIG.
Unless otherwise specifilied, set the respective switches as follows: **TAPE : NORMAL DOLBY : OFF INPUT : AUX** **I. Cassette mechanism section(Recording/ play head adjustment)**							
1	Degaussing and cleanling	—	—	Power : off, Degaussing, cleaning, PLAY	Recording heads, Erase heads, Capstans, Pinch rollers	Degauss the recording/play heads by a heads eraser. Clean the recording/play heads, erase heads capstans and pinch rollers by a cotton swab soaked with alcohol.	
2	Recording/play head azimuth	SCC-1727, TCC-153, MTT-144, 10kHz, -10dBs	(B)	PLAY	Azimuth adjust-ment screw	Maximize the output and adjust so that the Lissajous figure nears a line slanted 45°	
II. Printed circuit board adjustment Note : First perform the double-speed adjustment.							
1	Tape speed (double)	SCC-1727, TCC-110, MTT-144, 3kHz,	(B)	After normal play, always short the base side of Q7 to GND to set to high speed.	A DECK : VR7 B DECK : VR1	Adjust so that the frequency is 6 kHz at the tape center.	
2	Tape speed (normal)	SCC-1727, TCC-110, MTT-111, 3kHz,	(B)		A DECK : VR8 B DECK : VR2	Adjust so that the frequency is 3 kHz at the tape center.	
III. Printed circuit board adjustment(X28-2620-00)							
1	Play back level	MTT-150 400Hz	(B)	PLAY	A DECK : VR9(L) VR10(R) B DECK : VR3(L) VR4(R)	Set pins No.1(L ch) and No.4(R ch) of CN401 to -0.5dBs. Or, set pins No.8(L ch) and No.49(R ch) of IC 401 to 775mV.	
2	Bias current		(B)		B DECK : VR5(L) VR6(R)	Record 1kHz and 10kHz reciprocally, and adjust so that they are identical in playback level.	
3	Bias oscillating frequency	Load the non recorded tapes on Deck A and B.	Connect the frequency counter between E.H(+) & GND on Deck B.	REC	B DECK: L3	After confirming BEAT CANCEL OFF, adjust so that the frequency counter shows 105kHz.	

AJUSTES

Cassette Deck seccíon

Orden	Ítem	Ajuste de entrada	Ajuste de salida	Ajuste de la platina	Puntos de ajuste	MÈtodo de ajuste	Fig.
A menos que se indique lo contrario, ajustar los interruptores respectivos de la manera siguiente: TAPE: NORMAL DOLBY: OFF INPUT: AUX I. Sección del mecanismo de la cassette (ajuste de la cabeza de grabación/reproducción)							
1	Desmagneti-zación y limpieza	—	—	Alimentación: apagado, desmagnetización, limpieza, reproducción	Cabezas de grabación, cabezas de borrado, ejes de arrastre, rodillos presores	Desmagnetizar las cabezas de grabación/reproducción con un borrador de cabezas. Limpiar las cabezas de grabación/ reproducción, cabezas de borrado, ejes de arrastre y rodillos presores con un bastoncillo de algodón humedecido en alcohol.	
2	Acimut de la cabeza de grabación/ reproducción	SCC-1727, TCC-153, MTT-144, 10kHz, -10dBs	(B)	REPRODUCCIÓN (PLAY)	Tornillo de ajuste del acimut	Maximizar la salida y ajustar de manera que la forma de Lissajous se aproxime a una lÌnea inclinada 45°	
II. Ajuste de la tarjeta de circuito impreso Nota: Efectuar primero el ajuste de la velocidad doble.							
1	Velocidad de la cinta (doble)	SCC-1727, TCC-110, MTT-144, 3kHz	(B)	DespuÈs de la reproducción normal, cortocircuitar siempre la base de Q7 con masa (GND) para ajustarlo en alta velocidad.	PLATINA A: VR7 PLATINA B: VR1	Ajustar de manera que la frecuencia sea de 6 kHz en el centro de la cinta.	
2	Velocidad de la cinta (normal)	SCC-1727, TCC-110, MTT-111, 3kHz	(B)		PLATINA A: VR8 PLATINA B: VR2	Ajustar de manera que la frecuencia sea de 3 kHz en el centro de la cinta.	
III. Ajuste de la tarjeta de circuito impreso (X28-2620-00)							
1	Nivel de reproducción	MTT-150 400Hz	(B)	REPRODUCCI"N (PLAY)	PLATINA A: VR9 (IZQ.) VR10 (DCH.) PLATINA B: VR3 (IZQ.) VR4 (DCH.)	Ajustar los contactos no1 (canal izq.) y no 4 (canal dch.) de CN401 en -0,5 dBs. O ajustar los contactos no 8 (canal izq.) y no 49 (canal dch.) de IC401 en 775 mV.	
2	Corriente de polarización		(B)		PLATINA B: VR5 (IZQ.) VR6 (DCH.)	Grabar 1 Mhz y 10 kHz recìprocamente, y ajustar de manera que sean idÈnticos en el nivel de reproducciÛn.	
3	FRECUENCIA DE OSCILACIÓN DE LA POLARIZACIÓN	Cargar las cintas sin grabar en las platinas A y B.	Conectar el contador de frecuencias entre E.H.(+) y masa de la platina B.	GRABACIÓN (REC)	PLATINA B: L3	Después de confirmar que la cancelación de batido (BEAT CANCEL) est· desactivada, ajustar de manera que el contador de frecuencias indique 105 kHz.	

ADJUSTMENT

TUNER section

M.X.R, I Type (X29-249X)

No.	ITEM	INPUT SETTING	OUTPUT SETTING	TUNER SETTING	ALIGNMENT POINTS	ALIGN FOR	FIG.
FM SECTION		BAND : FM					
1	DISTORTION (STEREO)	(C) 98.0MHz 1kHz,±68.25 kHz dev Pilot : ±7.5kHz dev 60 dBμ(ANT input)	(B)	AUTO 98.0MHz	IFT (W02-)	Minimum distortion.	

E.T.G Type (X29-248X)

No.	ITEM	INPUT SETTING	OUTPUT SETTING	TUNER SETTING	ALIGNMENT POINTS	ALIGN FOR	FIG.
FM SECTION		BAND : FM					
1	DISCRIMINATOR	(A) 98.0MHz 1kHz,±75 kHz dev 60 dBμ(ANT input)	Connect a DC voltmeter between TP3 and TP4. (X05-)	AUTO or MONO 98.0MHz	L3 (X05-)	0V	(c)
2	DISTORTION (STEREO)	(C) 98.0MHz 1kHz,±68.25 kHz dev Pilot : ±7.5kHz dev 60 dBμ(ANT input)	(B)	AUTO 98.0MHz	IFT (W02-)	Minimum distortion.	
3	SEPARATION	(C) 98.0MHz 1kHz,±40 kHz dev Pilot : ±6kHz dev Selector : L or R 60 dBμ(ANT input)	(B)	AUTO 98.0MHz	VR3 (X29-)	Minimum crosstalk.	
4	TUNING LEVEL	(C) 98.0MHz 1kHz,±75 kHz dev 14dBμ(ANT input) 75Ω 18dBμ(ANT input) 300Ω	(B)	AUTO or MONO 98.0MHz	VR1 (X29-)	Adjust VR1 and stop at the point where FL201(TUNED) goes ON.	
AM SECTION		BAND : AM(MW)					
1	TUNING LEVEL	(D) 1008MHz 400Hz, 30% mod 26 dBμ(ANT input)	(B)	1008 kHz	VR2 (X29-)	Adjust VR2 and stop at the point where FL201(TUNED) goes ON.	

AJUSTES

TUNER seccíon

Tipo M.X.R, I (X29-249X)

No	ITEM	AJUSTES DE ENTRADA	AJUSTES DE SALIDA	AJUSTES DEL SINTONIZADOR	PUNTOS DE CALIBRACIÓN	CALIBRA R EN	FIG.
SECCIÓN DE FM		BANDA: FM					
1	DISTORSIÓN (ESTÉREO)	(C) 98,0 MHz 1 kHz, ±68,25 kHz desv. Piloto: ±7,5 kHz desv. 60 dBμ (entrada ANT)	(B)	AUTO 98,0 Mhz	IFT (W02-)	Distorsión mínima	

Tipo E.T.G(X29-248X)

No	ITEM	AJUSTES DE ENTRADA	AJUSTES DE SALIDA	AJUSTES DEL SINTONIZADOR	PUNTOS DE CALIBRACIÓN	CALIBRA R EN	FIG.
FM SECTION		BAND : FM					
1	DISCRIMINADOR	(A) 98,0 MHz 1 kHz, ±75 kHz desv. 60 dBμ (entrada ANT)	Conectar un voltìmetro de CC entre TP3 y TP4. (X05-)	AUTO o MONO 98,0 MHz	L3 (X05-)	0V	(c)
2	DISTORSIÓN (ESTÉREO)	(C) 98,0 MHz 1 kHz, ±68,25 kHz desv. Piloto: ±7,5 kHz desv. 60 dBm (entrada ANT)	(B)	AUTO 98,0 MHz	IFT (W02-)	Distorsión mínima	
3	SEPARACIÓN	(C) 98,0 MHz 1 kHz, ±40 kHz desv. Piloto: ±6 kHz desv. Selector: L o R 60 dBm (entrada ANT)	(B)	AUTO 98,0 MHz	VR3 (X29-)	Diafonía mníima	
4	NIVEL DE SINTÓNA	(A) 98,0 MHz 1 kHz, ±75 kHz desv. 14 dBμ(entrada ANT) 75 Ω 14 dBm(entrada ANT) 300 Ω	(B)	AUTO o MONO 98,0 MHz	VR1 (X29-)	Ajustar VR1 y parar en el punto donde se activa FL201 (TUNED)	
SECCIÓN DE AM		BANDA: AM (OM)					
1	NIVEL DE SINTÓNA	(D) 1008 kHz 400 Hz, 30% mod. 26 dBμ (entrada ANT)	(B)	1008 kHz	VR2 (X29-)	Ajustar VR2 y parar en el punto donde se activa FL201 (TUNED)	

ADJUSTMENT

(c)

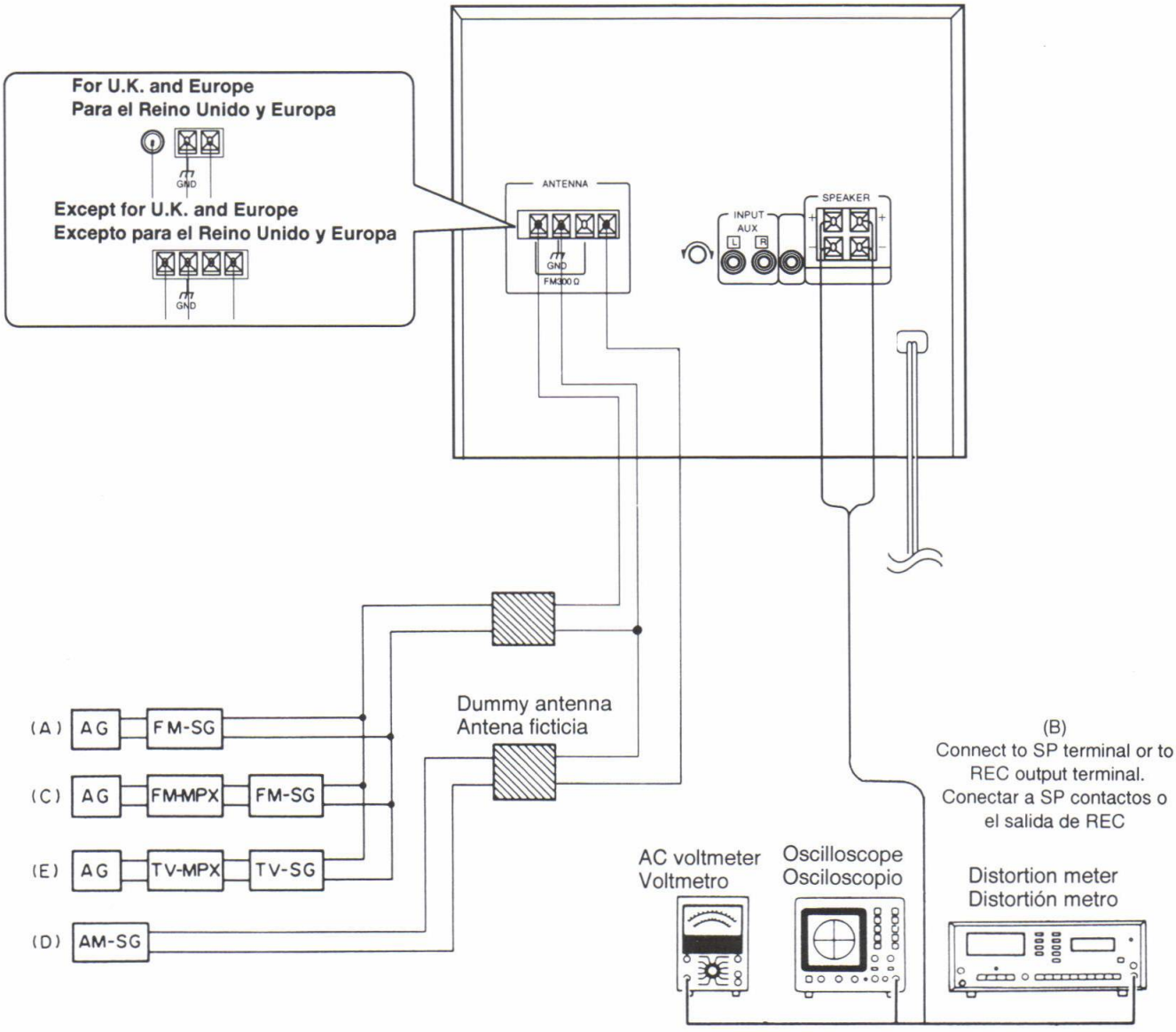

REC output : for X29 L ch, connect CN401 pin 1 to GND;
for X29 R ch, connect CN401 pin 4 toGND.

Salida de REC : X29 canal izp., Conectar CN401
contactos no 1 a masa.
X29 canal dch., Conectar CN401
contactos no 4 a masa.

RXD-C2/L RXD-C2/L

WIRING DIAGRAM

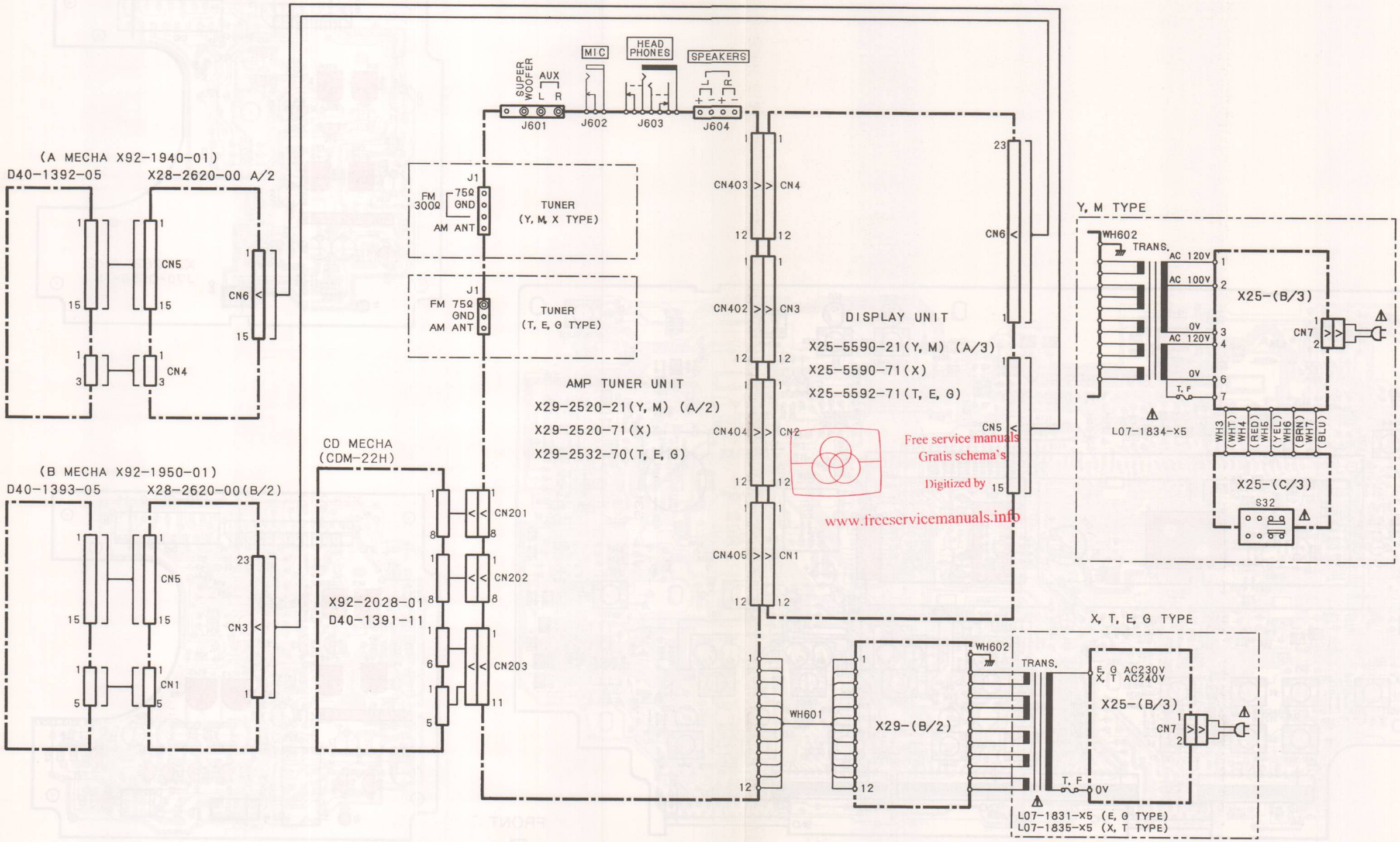

PC BOARD(Component side view)

DISPLAY UNIT(X25-559X-XX)
RECORD/PLAYBACK UNIT(X28-2620-00)

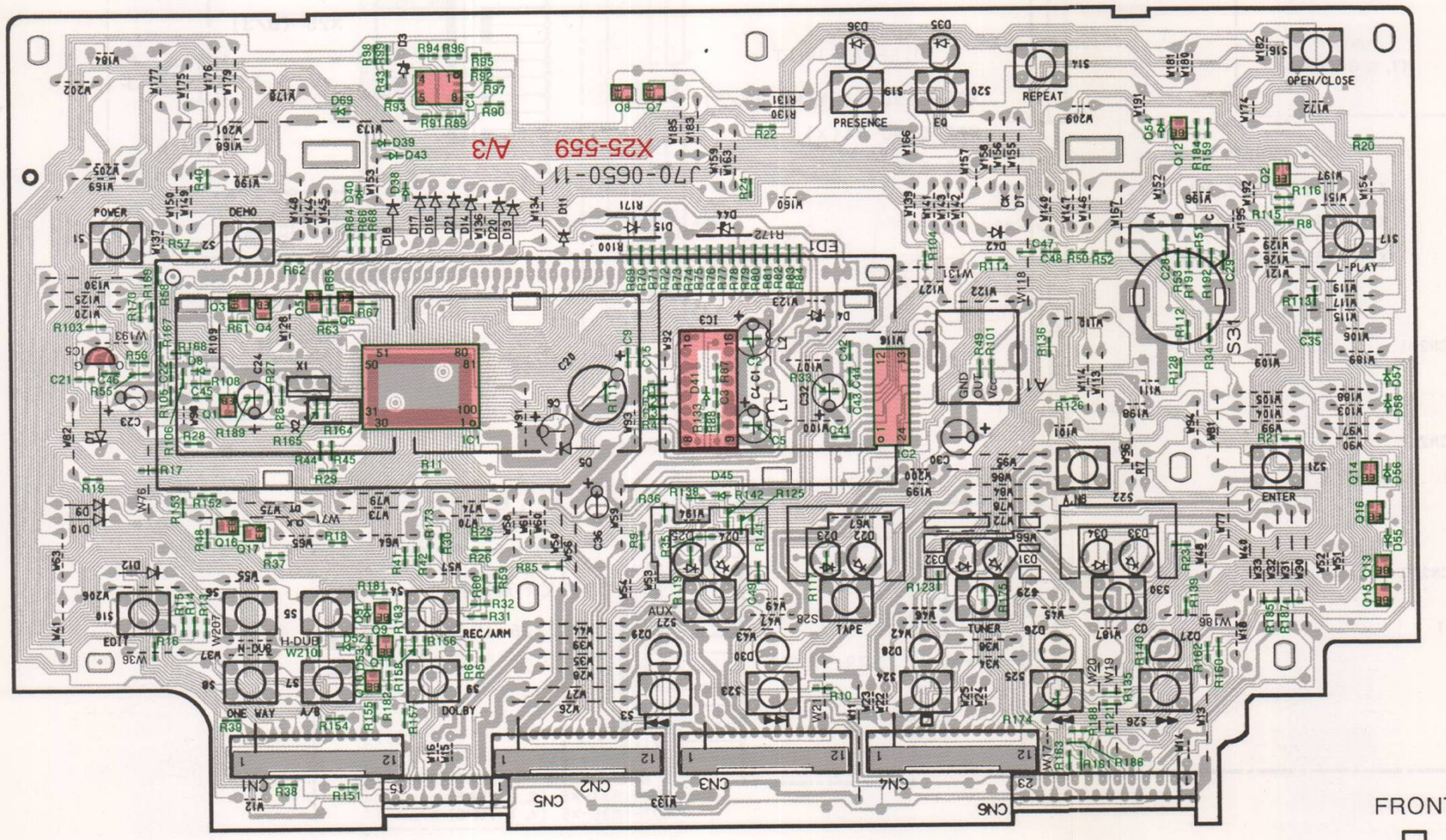

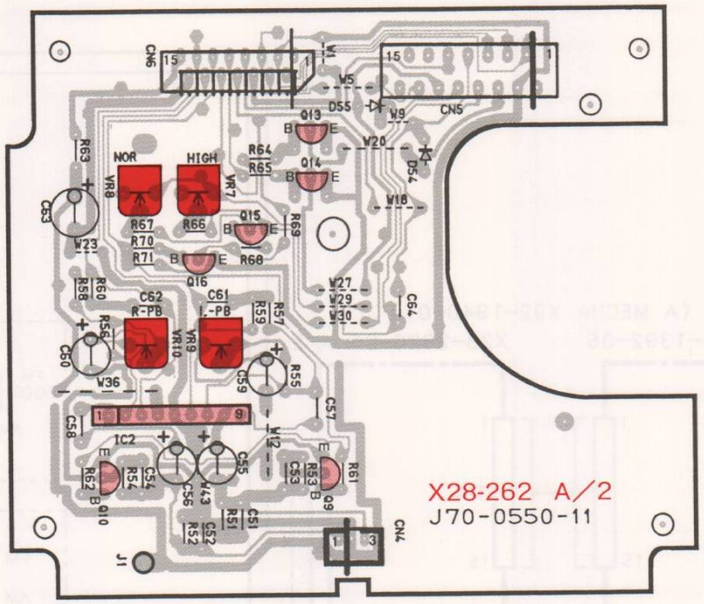

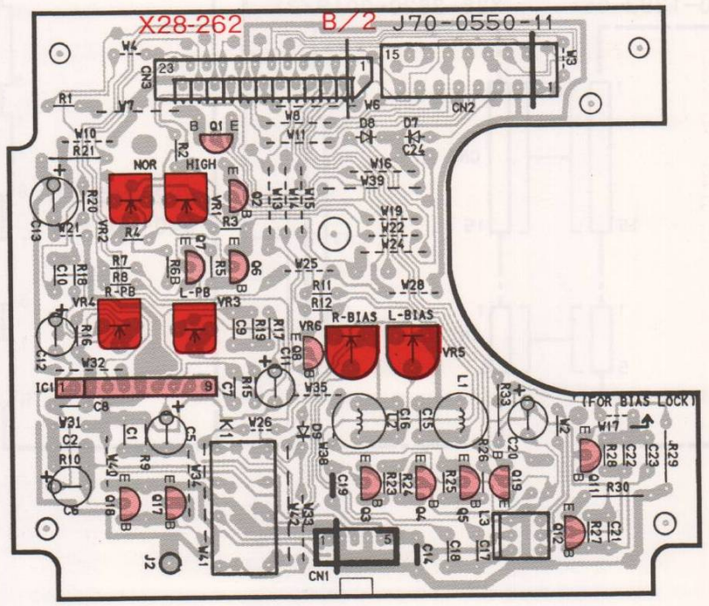

FRONT

Refer to the schematic diagram for the values of resistors and capacitors.

PC BOARD(Component side view)

MAIN UNIT-TUNER (X29-2520-XX) : Y, M, X TYPE

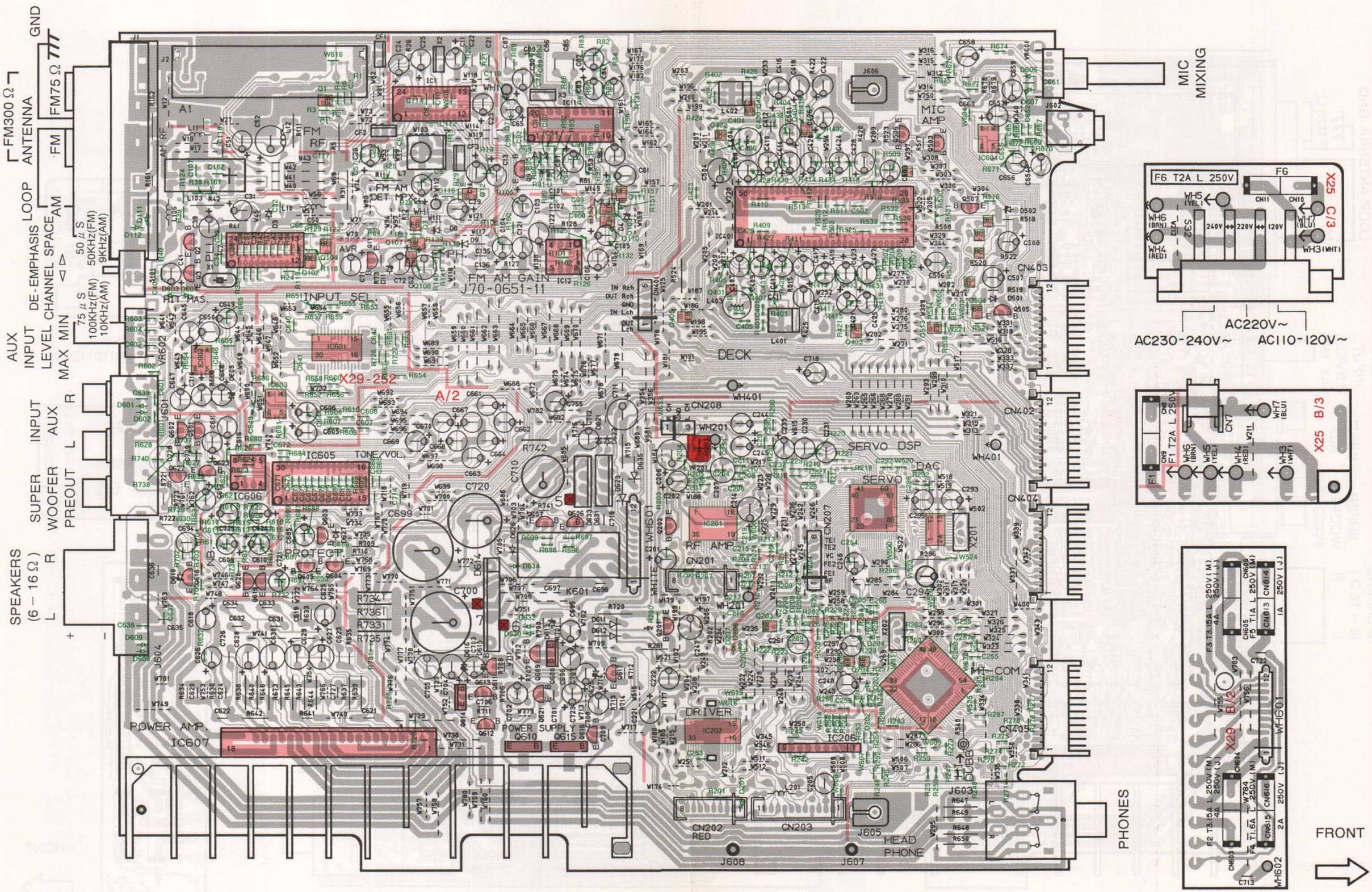

Refer to the schematic diagram for the values of resistors and capacitors.

PC BOARD(Component side view)

MAIN UNIT- TUNER (X29-2532-70) : E, G, T TYPE

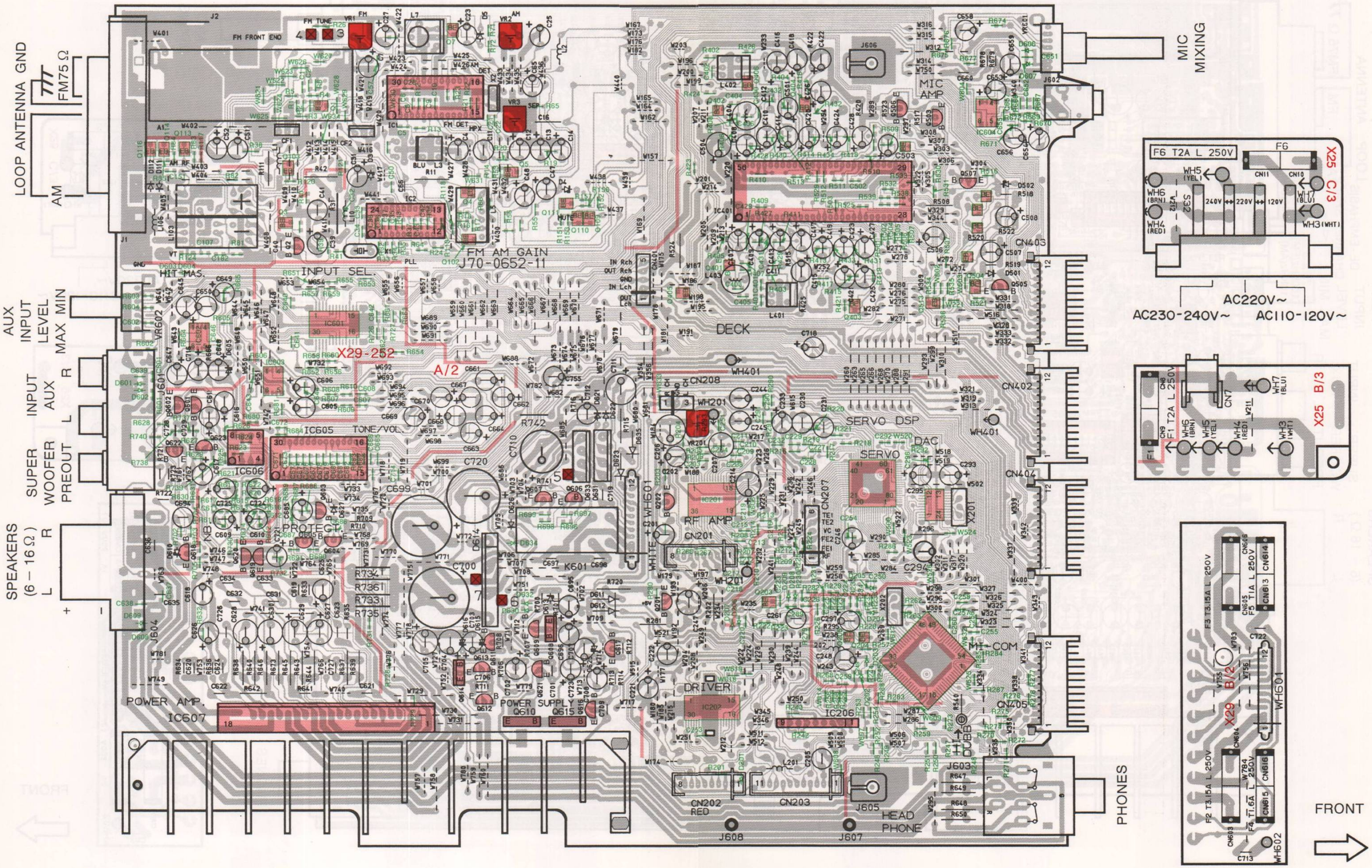

Refer to the schematic diagram for the values of resistors and capacitors.

X29-2520-XX (Y, M, X TYPE) TUNER

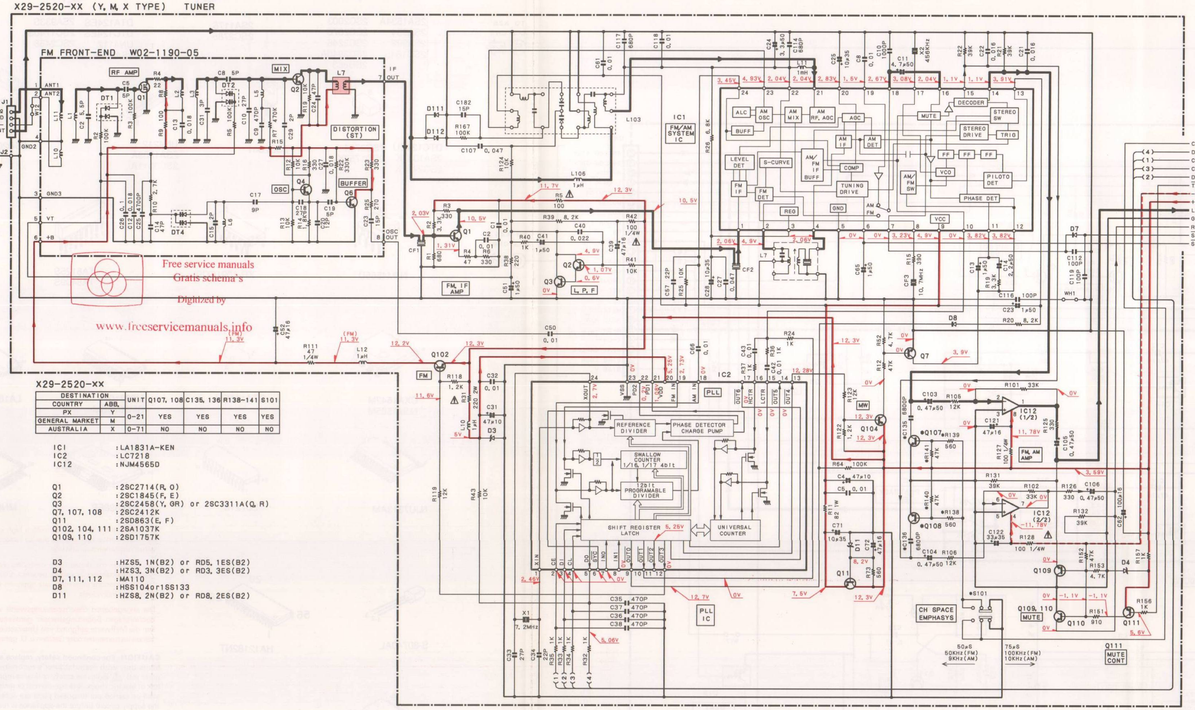

X29-2520-XX

DESTINATION		UNIT	Q107, 108	C135, 136	R138-141	S101
COUNTRY	ABB.					
PX	Y	0-21	YES	YES	YES	YES
GENERAL MARKET	M					
AUSTRALIA	X	0-71	NO	NO	NO	NO

IC1 : LA1831A-KEN
IC2 : LC7218
IC12 : NJM4565D

Q1 : 2SC2714(R, O)
Q2 : 2SC1845(F, E)
Q3 : 2SC2458(Y, GR) or 2SC3311A(Q, R)
Q7, 107, 108 : 2SC2412K
Q11 : 2SD863(E, F)
Q102, 104, 111 : 2SA1037K
Q109, 110 : 2SD1757K

D3 : HZ5S, 1N(B2) or RD5, 1ES(B2)
D4 : HZ53, 3N(B2) or RD3, 3ES(B2)
D7, 111, 112 : MA110
D8 : HSS104or1SS133
D11 : HZ6S, 2N(B2) or RD6, 2ES(B2)

X29-2532-70 (T, E, G TYPE) TUNER

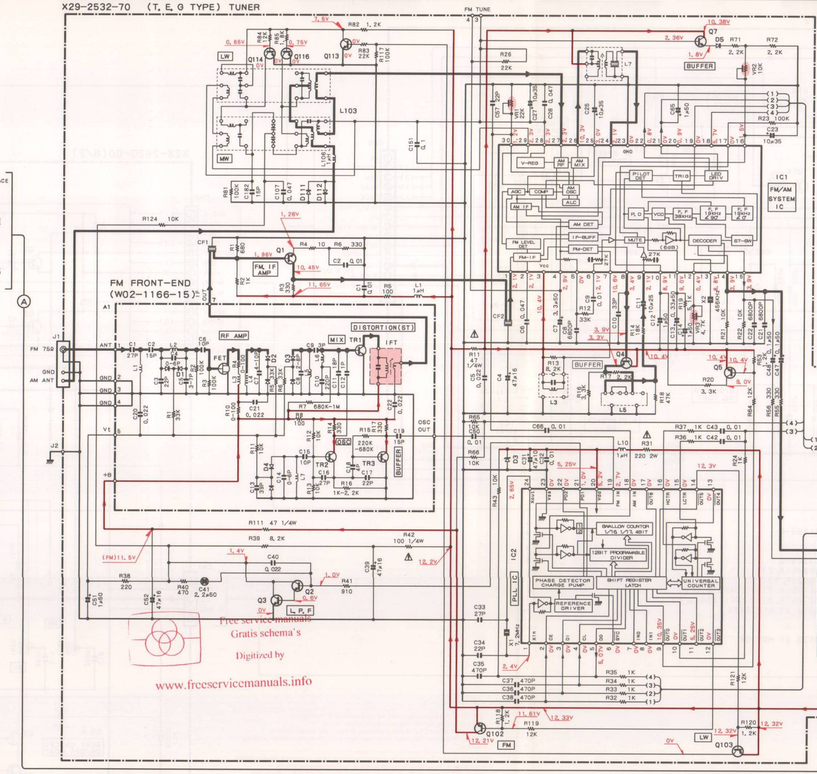

IC1 : LA1851N
IC2 : LC7218

Q1 : 2SC2714(R, O)
Q2 : 2SC1845(F, E)
Q3, 4, 7, 113, 114, 116 : 2SC2412K
Q5, 102, 103, 111, Q109, 110 : 2SA1037K
: 2SD1757K

D3 : HZ5S, 1N(B2) or RD5, 1ES(B2)
D4 : HZ53, 3N(B2) or RD3, 3ES(B2)
D5, 111, 112 : 1SS133 or HSS104

CAUTION: For continued safety, replace safety critical components only with manufacturer's recommended parts (refer to parts list). ⚠ Indicates safety critical components. To reduce the risk of electric shock, leakage-current or resistance measurements shall be carried out (exposed parts are acceptably insulated from the supply circuit) before the appliance is returned to the customer.

DC voltages are as measured with a high impedance voltmeter. Values may vary slightly due to variations between individual instruments or/and units.

Les tensions c.c. doivent être mesurées avec un voltmètre à haute impédance. Les valeurs peuvent différer légèrement du fait des variations inhérentes aux appareils et aux instruments de mesure individuels.

Die angegebenen Gleichspannungswerte wurden mit einem hochohmigen Spannungsmesser gemessen. Dabei schwanken die Meßwerte aufgrund von Unterschieden zwischen einzelnen Instrumenten oder Geräten u. U. geringfügig.

(A MECHA X92-1940-00)
A MECHA D40-1392-05
MECHA PCB X28-2620-00

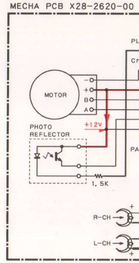

(B MECHA X92-1950-00)
B MECHA D40-1393-05
MECHA PCB X28-2620-00

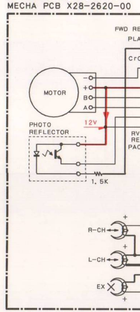

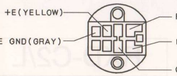

X28-2620-00 A/2

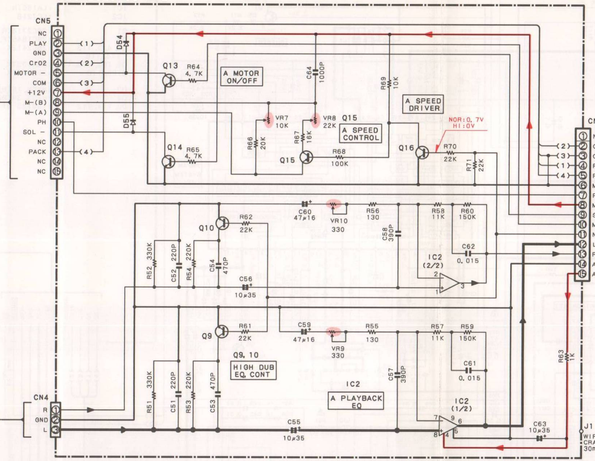

IC1, 2 :TA8125S-G

Q1, 2, 13, 14 :2SC3246-G
Q3, 4 :2SC1845(F, E)
Q5 :2SA992(F, E)
Q6, 15 :2SA1175(F, E)or 2SA933S(Q, R)
Q7, 9-12, 16 :2SC2785(F, E)or 2SC1740S(Q, R)
Q8, 17-19 :UN4212 or DTC124ES

D7-9, 54, 55 :1SS133 or HSS104

X28-2620-00(B/2)

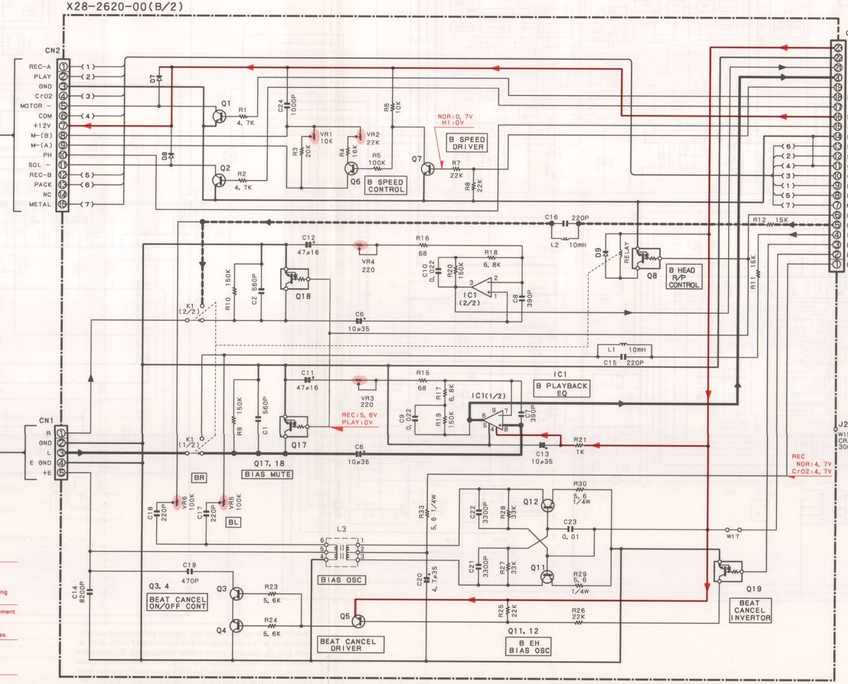

TO X25 A/3 CN5

TO X25 A/3 CN6

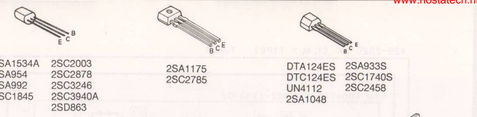

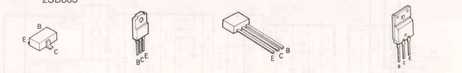

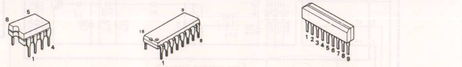

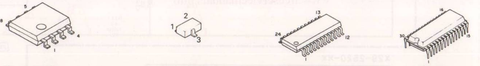

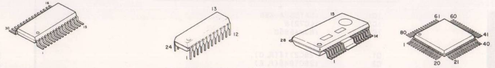

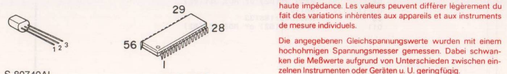

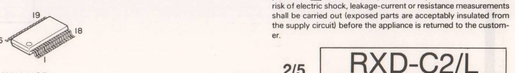

DC voltages are as measured with a high impedance voltmeter. Values may vary slightly due to variations between individual instruments or/and units.

Les tensions c.c. doivent être mesurées avec un voltmètre à haute impédance. Les valeurs peuvent différer légèrement du fait des variations inhérentes aux appareils et aux instruments de mesure individuels.

Die angegebenen Gleichspannungswerte wurden mit einem hochohmigen Spannungsmesser gemessen. Daher schwanken die Meßwerte aufgrund von Unterschieden zwischen einzelnen Instrumenten oder Geräten u. U. geringfügig.

CAUTION: For continued safety, replace safety critical components only with manufacturer's recommended parts (refer to parts list). ⚠ Indicates safety critical components. To reduce the risk of electric shock, leakage-current or resistance measurements shall be carried out (exposed parts are acceptably insulated from the supply circuit) before the appliance is returned to the customer.

2/5

Y39-2110-21

RXD-C2/L

KENWOOD

UNIT	ABB
20-21	Y, M
20-71	X
32-70	T, E, G

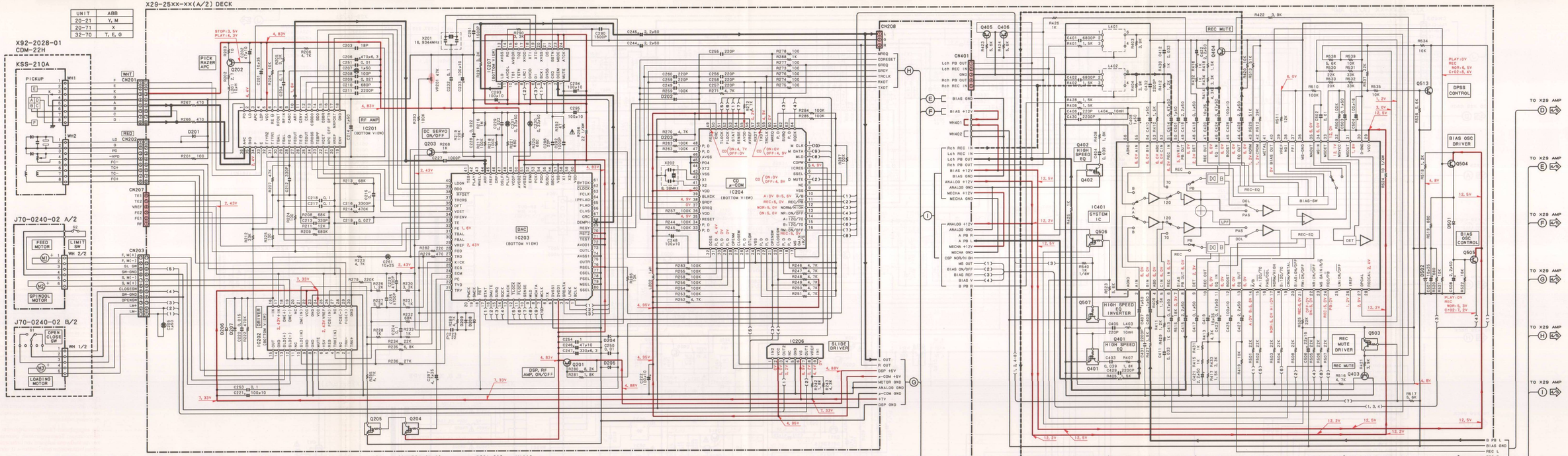

IC201	:AN8806SB	IC204	:UPD78012B0C-652	Q201	:2SA1534A(R,S)	D201-209	:MA110
IC202	:BA6398FP	IC206	:TA84096	Q202	:2SA954(L,K)		
IC203	:MN662720RB	IC207	:SM5875BM	Q203	:2SC2412K		
				Q204	:DTA115EU		
				Q205	:DTC124EU		

IC401 :HA12182NT

Q401, 402	:DTC124EU	Q504, 513	:2SC2412K	D501	:1SS133 or HSS104
Q403, 404	:2SD1757K	Q505	:2SC3940A(R,S)	D502	:HZ5.1N(B2)or RD5.1ES(B2)
405, 406		Q507	:DTC124ES or UN4212		
Q503, 506	:DTA124ES or UN4112				

SIGNAL LINE
RECORDING LINE
GND LINE
+B LINE

DC voltages are as measured with a high impedance voltmeter. Values may vary slightly due to variations between individual instruments or/and units.

Les tensions c.c. doivent être mesurées avec un voltmètre à haute impédance. Les valeurs peuvent différer légèrement du fait des variations inhérentes aux appareils et aux instruments de mesure individuels.

Die angegebenen Gleichspannungswerte wurden mit einem hochohmigen Spannungsmesser gemessen. Dabei schwanken die Meßwerte aufgrund von Unterschieden zwischen einzelnen Instrumenten oder Geräten u. U. geringfügig.

CAUTION: For continued safety, replace safety critical components only with manufacturer's recommended parts (refer to parts list). Indicated by ⚠ safety critical components. To reduce the risk of electric shock, leakage-current or resistance measurements shall be carried out (exposed parts are acceptably insulated from the supply circuit) before the appliance is returned to the customer.

RXD-C2/L
KENWOOD

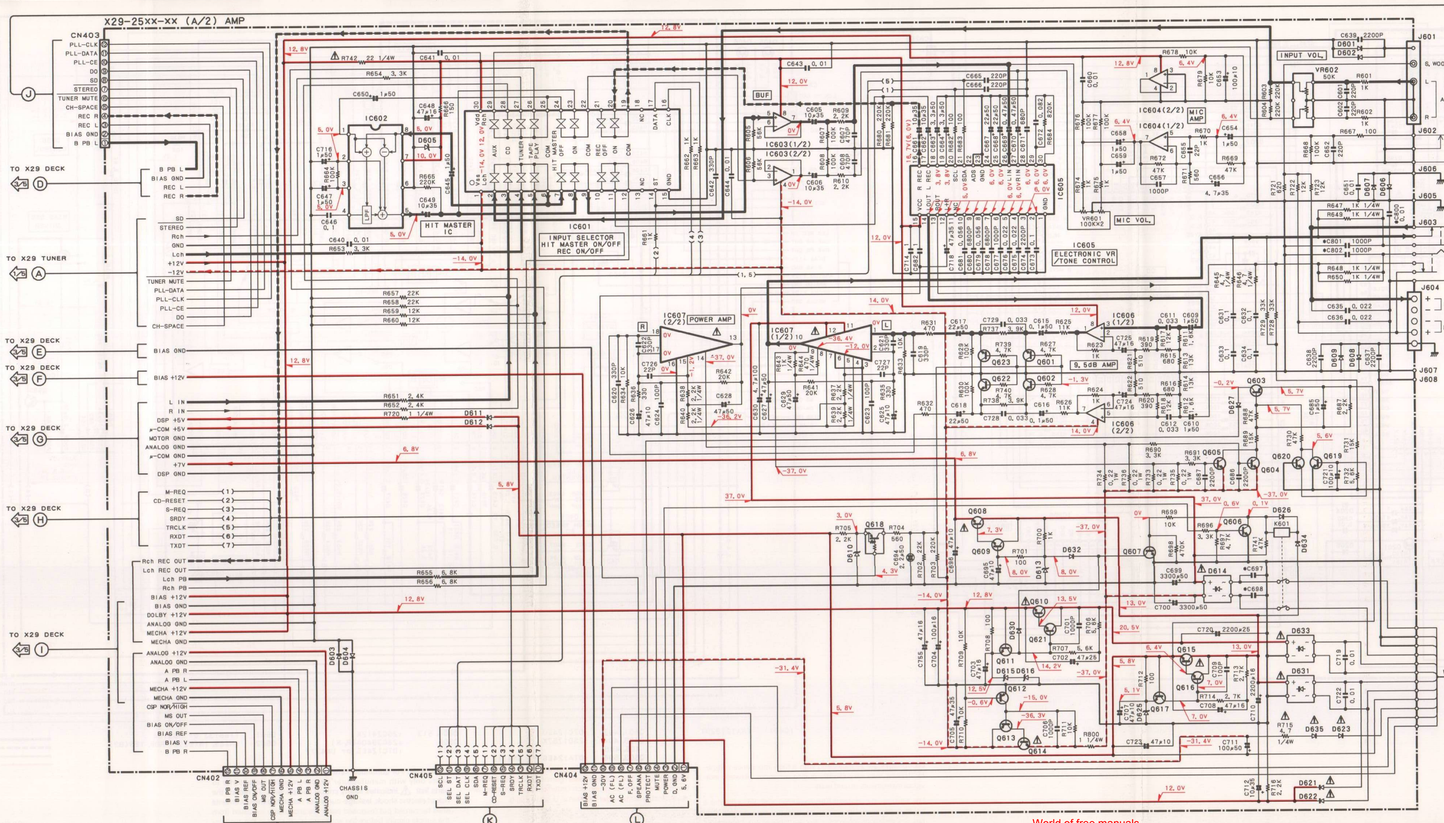

X29-25xx-xx (A/2)

DESTINATION	ABB.	UNIT	C697, 698	C800-802
COUNTRY				
PX	Y	20-21	0, 01	NO
GENERAL MARKET	M			
AUSTRALIA	X	20-71		
ENGLAND	T			
EUROPE	E	32-70	0, 1	YES
GERMANY	G			

X29-(A/2)

IC601	:NJU7313AM
IC602	:CXA1642M
IC603, 604	:NJM4565M
IC605	:UPC1853CT-02
IC606	:NJM4565D
IC607	:STK4142/2K
Q601, 602, 622, 623	:2SC2878(B)
Q603, 612, 613	:2SA1309A(Q, R) or 2SA1048(Y, GR)
Q604, 605	:2SC1845(F, E)
Q606	:2SC2003(L, K)
Q607, 609, 611, 616 617, 619-621	:2SC3311A(Q, R) or 2SC2458(Y, GR)
Q608, 610, 614, 615	:2SD2061 or 2SD2012
Q618	:DTA113ZS or UN4119
D601-604, 606-609 630, 632, 634	:MA110
D605	:HZ610N(B2) or RD10ES(B2)
D610	:HZ33, 3N(B2) or RD3, 3ES(B2)
D611, 612, 623, 635	:6S688B or 1SR139-100
D613	:HZ68, 2(B2) or RD8, 2ES(B2)
D614	:D368A20F03 or RBV-402LFA
D615, 616	:HZ66, 2N(B2) or RD6, 2ES(B2)
D621, 622, 626, 627	:1SS133 or HSS104
D625	:HZ85, 1N(B2) or RD5, 1ES(B2)
D631, 633	:KBP02ML-6127

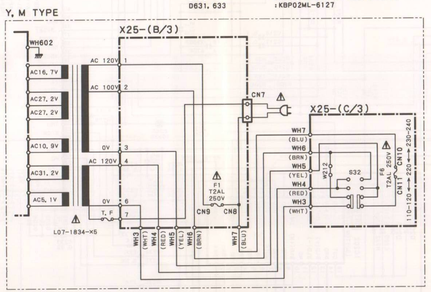

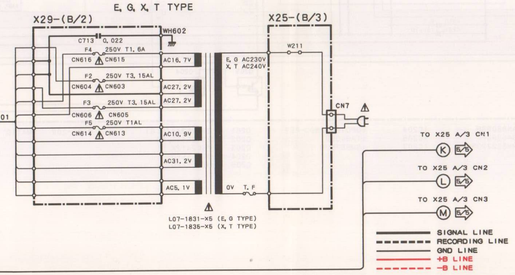

KENWOOD follows a policy of continuous advancements in development.
For this reason specifications may be changed without notice.
DOLBY and the double-D symbol are trademarks of Dolby Laboratories Licensing Corporation. Noise reduction circuit made under license from Dolby Laboratories Licensing Corporation.

KENWOOD poursuit une politique de progrès constants en ce qui concerne le développement.
Pour cette raison, les spécifications sont sujettes à modifications sans préavis.
La marque DOLBY et le double "D" sont des marques déposées des Dolby Laboratories.
Le système de réduction du bruit de fond est fabriqué sous license des Dolby Laboratories.

KENWOOD strebt ständige Verbesserungen in der Entwicklung an.
Daher bleiben Änderungen der technischen Daten jederzeit vorbehalten.
DOLBY und Doppel-D-Symbol sind eingetragene Warenzeichen der Dolby Laboratories.
Dolby-Rauschunterdrückung mit Lizenz der Dolby Laboratories gefertigt.

DC voltages are as measured with a high impedance voltmeter. Values may vary slightly due to variations between individual instruments or/and units.

Les tensions c.c. doivent être mesurées avec un voltmètre à haute impédance. Les valeurs peuvent différer légèrement du fait des variations inhérentes aux appareils et aux instruments de mesure individuels.

Die angegebenen Gleichspannungswerte wurden mit einem hochohmigen Spannungsmesser gemessen. Dabei schwanken die Meßwerte aufgrund von Unterschieden zwischen einzelnen Instrumenten oder Geräten u. U. geringfügig.

CAUTION: For continued safety, replace safety critical components only with manufacturer's recommended parts (refer to parts list). ⚠ Indicates safety critical components. To reduce the risk of electric shock, leakage-current or resistance measurements shall be carried out (exposed parts are acceptably insulated from the supply circuit) before the appliance is returned to the customer.

4/5

Y39-2110-21

RXD-C2/L

KENWOOD

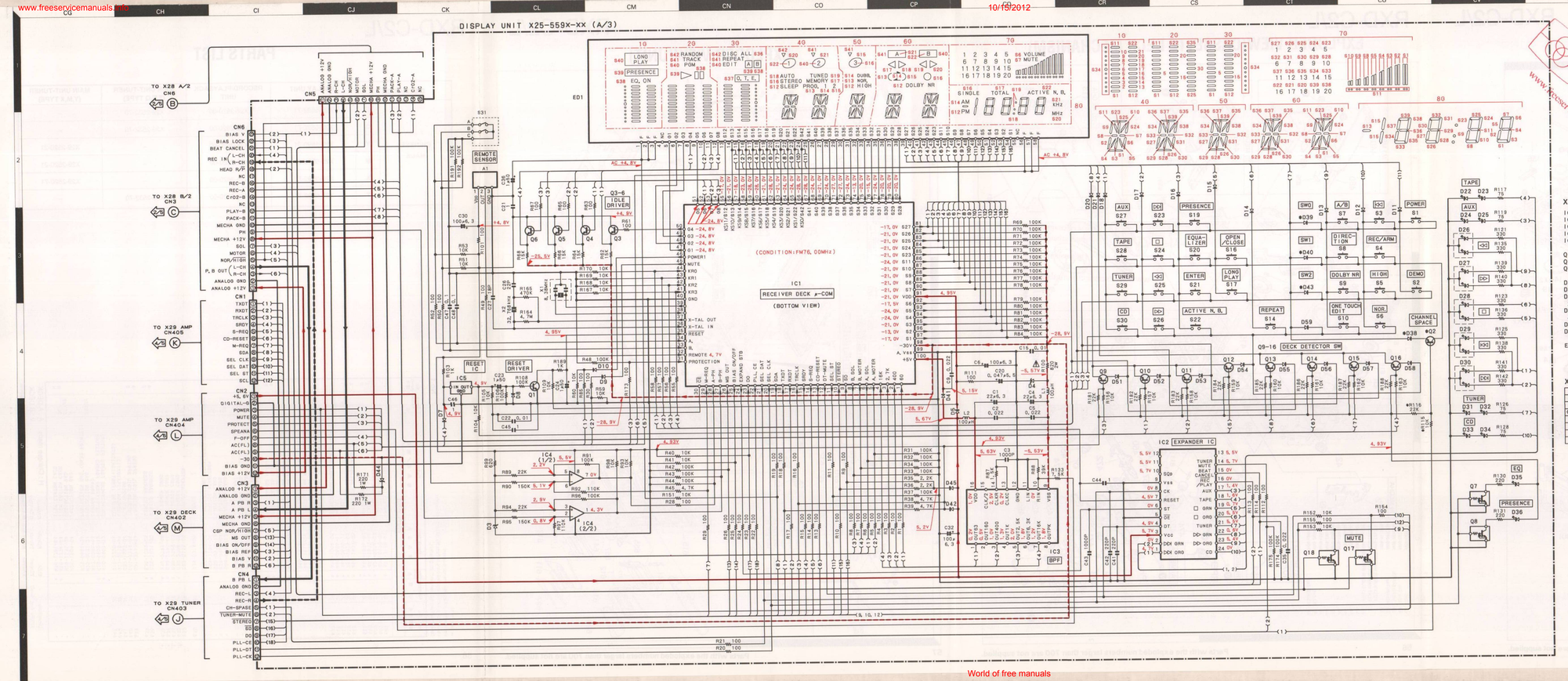

X25-(A/3)

IC1	:M38197MA-088FP
IC2	:M66310FP
IC3	:XR-1091ECP
IC4	:BA10393F
IC5	:S-80740AL
Q1, 3-6	:2SC2412K
Q2, 9-16	:2SA1037K
Q7, 8, 17, 18	:DTC124EU
D3	:HZ9.2, 7N(B2) or RD2, 7ES(B2)
D4, 44	:HZ8.5, 6N(B2) or RD5, 6ES(B2)
D5, 7, 9-18, 20, 21, 42	:1SS131 or HSS104A
D8, 38-41, 43, 45, 51-59	:MA111
D22-25, 31-36	:B30-2462-05
D26-30	:B30-2463-05
ED1	:FIP8QMW5R

X25-559X-XX (A/3)

DESTINATION								
COUNTRY	ABIL	UNIT	R115 R116	Q2	D38	D39	D40	D43
PX	Y	0-21	YES	YES	YES	YES	NO	NO
GENERAL MARKET	M						YES	
AUSTRALIA	X	0-71	NO	NO	NO	NO	NO	YES
ENGLAND	T							
EUROPE	E	2-71						
GERMANY	G							

DC voltages are as measured with a high impedance voltmeter. Values may vary slightly due to variations between individual instruments or/and units.

Les tensions c.c. doivent être mesurées avec un voltmètre à haute impédance. Les valeurs peuvent différer légèrement du fait des variations inhérentes aux appareils et aux instruments de mesure individuels.

Die angegebenen Gleichspannungswerte wurden mit einem hochohmigen Spannungsmesser gemessen. Dabei schwanken die Meßwerte aufgrund von Unterschieden zwischen einzelnen Instrumenten oder Geräten u. U. geringfügig.

CAUTION: For continued safety, replace safety critical components only with manufacturer's recommended parts (refer to parts list). ⚠ Indicates safety critical components. To reduce the risk of electric shock, leakage-current or resistance measurements shall be carried out (exposed parts are acceptably insulated from the supply circuit) before the appliance is returned to the customer.

EXPLODED VIEW(CD MECHANISM)

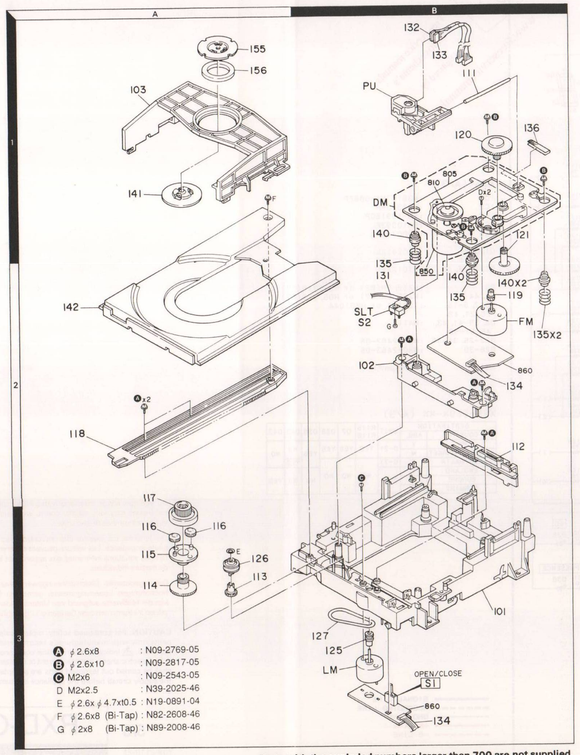

Parts with the exploded numbers larger than 700 are not supplied.

RXD-C2/L

EXPLODED VIEW(CASSETTE DECK MECHANISM)

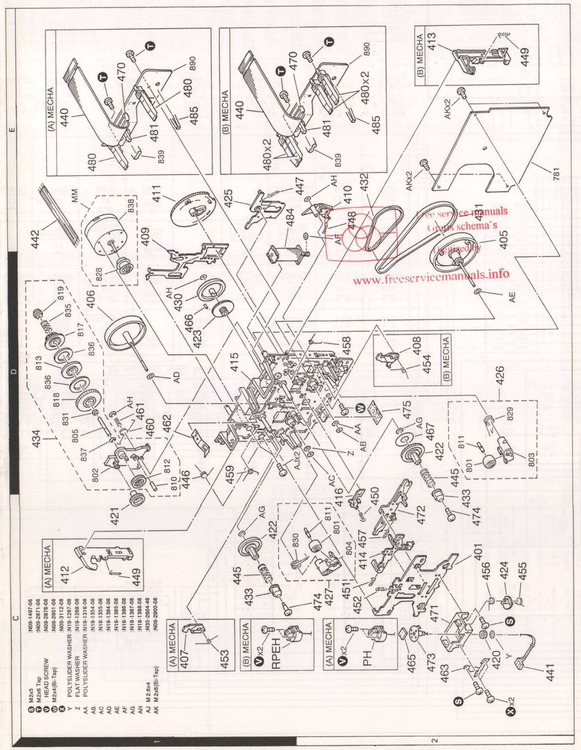

Parts with the exploded numbers larger than 700 are not supplied.

RXD-C2/L

EXPLODED VIEW(UNIT)

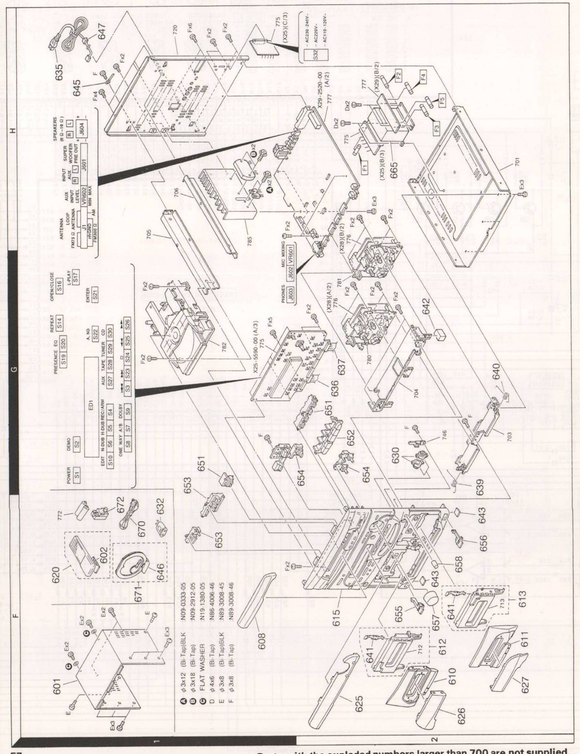

Parts with the exploded numbers larger than 700 are not supplied.

RXD-C2/L

PARTS LIST

DISTINATION		DISPLAY UNIT	RECORD/PLAYBACK UNIT	MAIN UNIT-TUNER (T,E,G TYPE)	MAIN UNIT-TUNER (Y,M,X TYPE)
CHINESE MADE	E	X25-5592-71	X28-2620-00	X29-2532-70	–
	G	X25-5592-71	X28-2620-00	X29-2532-70	–
	Y	X25-5590-21	X28-2620-00	–	X29-2520-21
	M	X25-5590-21	X28-2620-00	–	X29-2520-21
	X	X25-5590-71	X28-2620-00	–	X29-2520-71
	T	X25-5592-71	X28-2620-00	X29-2532-70	–

No.1

* Notes:
Parts without Parts No. are not supplied.
The mark found on some component parts indicates the importance for the safety.
Take care Parts No. wenthen once gotahem.

Ref. No. 参照番号	Address 位置	Parts No. 部品番号	Description 部品名称／規格	Destination 仕向地
			RXD-C2/L	
601	1F	A31-3188-01	METALLIC CABINET	A B
602	1F	A23-0170-08	BATTERY COVER	
603	1F	A23-0170-09	BATTERY COVER	
610	2F	A23-1835-02	CASSETTE LID	A B
611	2F	A23-1836-02	CASSETTE LID	
612	2F	A23-1837-03	CASSETTE HOLDER ASSY	A B
613	2F	A23-1839-01	CASSETTE HOLDER ASSY	
615	2F	A23-1844-01	PLATE	
620	2F	A23-1064-13	PLATE	
625	2F	A32-1877-03	PLATE CONTROLLER ASSY(RC-C2)	EG7
626	2F	A23-1859-01	CASSETTE HOLDER ASSY	TRK
627	2F	A23-1860-01	CASSETTE LID	
630	2G	A32-1878-00	PLATE CONTROLLER ASSY(RC-C2)	E
632	2F	B40-1808-00	INSTRUCTION MANUAL(FRENCH)	EG
639	2G	B40-1811-00	INSTRUCTION MANUAL(ITALIAN)	EG
640	2G	B40-1812-00	INSTRUCTION MANUAL(DUTCH)	EG
641	2G	B40-1813-00	INSTRUCTION MANUAL(GERMAN)	EG
642	2G	B40-1814-00	INSTRUCTION MANUAL(SPANISH)	EG
643	2G	B40-1815-00		
645	1G	B40-1816-00	INSTRUCTION MANUAL(CHINESE)	K
646	2F	B10-2969-03	FRONT GLASS(CENTER)(PLATINED)	
647	1G	B10-2970-03	FRONT GLASS(CENTER)	
653	2F	B10-2971-03	FRONT GLASS(LID)	
654	2F	B10-2972-03	FRONT GLASS(LID)	
655	2F	B10-2973-03		
656	2F	B84-0096-53	WARRANTY CARD	X
657	2F	B84-0097-53	WARRANTY CARD	EGST
658	2F	B84-0098-53	WARRANTY CARD	XT
659	2G	B84-0099-53	WARRANTY CARD	
660	2G	B84-0100-53	WARRANTY CARD	
661	2G	B58-0965-13	CAUTION CARD (UL)	
662	2G	B58-0966-13	CAUTION CARD	EM
663	2G	B58-0967-13	CAUTION CARD	G
664	2G	B58-0970-13	CAUTION CARD(BATTERY	Y
665	1G	B58-0971-13	CAUTION CARD(BATTERY	EYMXT
666	2G	B40-1807-00	INSTRUCTION MANUAL(ENG.ISH)	
667	2G	D39-0316-05	DAMPER	
668	2G	E23-3138-05	AC PLUG ADAPTER	A
669	1H	E23-3139-05	AC PLUG ADAPTER	EGM
670	2G	E25-2769-05	AC POWER CORD	Y
671	2G	E25-2770-05	AC POWER CORD	XT
672	2G	E25-2771-05	AC POWER CORD	
680	1H	E25-1031-05	WIRING HARNESS	A B
681	1H	E25-1032-05	WIRING HARNESS	
682	1H	E25-1033-05	WIRING HARNESS	
683	2G	G01-3733-04	TENSION COIL SPRING	A B
684	2G	G01-3734-04	TENSION COIL SPRING	
685	2G	G02-0971-04	FLAT SPRING	
686	2G	G02-0972-04	FLAT SPRING	
687	2G	G11-2202-04	CUSHION (FOR FIXTURE)	
688	2G	G11-2203-04	CUSHION (FOR FIXTURE)	
689	2G	H10-2931-12	POLYSTYRENE FOAM FIXTURE	EGTRX
690	2G	H10-2932-12	POLYSTYRENE FOAM FIXTURE	
691	2G	H13-0585-04	CARTON BLANK	
692	2G	H13-0586-04	CARTON BLANK	
693	2G	H25-0443-04	PROTECTION BAG (0632 PRINTED)	EGTRX
694	2G	H25-0444-04	PROTECTION BAG	
695	2G	H25-1359-04	PROTECTION BAG	
696	2G	H25-1360-04	PROTECTION BAG	X
697	2G	H25-1374-04	TIM CARTON CASE	EGTRX
698	2G	H25-1375-04	TIM CARTON CASE	EGT
699	2G	H25-1376-04	TIM CARTON CASE	XT

E:Canadiana K:USA P:Canada R:Mexico A : A DECK
T:PX(Far East,Hawaii) E:Europe M:Other Misc. Q:Germany B : B DECK
U:Australia/New Zealand X:Other Areas Y:U.K.Other areas

⚠ Indicates safety critical components.

PARTS LIST

RXD-C2/L

× New Parts
Parts without Parts No. are not supplied.
Les articles non mentionnes dans le Parts No. ne sont pas fournis.
Teile ohne Parts No. werden nicht geliefert.

No.2

Ref. No. 参照番号	Address 位置	New Parts 新	Parts No. 部品番号	Description 部品名／規格	Destination 仕向	Remarks 備考
-		*	H50-1362-04	ITEM CARTON CASE	MX	H
645	1H		J19-2808-05	HOLDER	M	
646	1F		J19-3645-05	ANTENNA STAND		
⚠ 647	1H		J42-0083-05	POWER CORD BUSHING		
-			J61-0035-05	WIRE BAND		
651	1G,2G	*	K29-6026-03	KNOB (SELECTER,EQ)		
652	2G	*	K29-6027-03	KNOB (OPERATION)		
653	1F,1G	*	K29-6028-03	KNOB (POWER,FUNCTOIN)		
654	2G	*	K29-6029-02	KNOB (OPE/CLO,REP,ACTIVE NB)		
655	2F	*	K29-6030-04	KNOB (EJECT)		A
656	2F	*	K29-6031-04	KNOB (EJECT)		B
657	2F	*	K29-6032-04	KNOB (VOLUME CONTROL)		
658	2F	*	K29-6033-04	KNOB (MIC MIXING)		
⚠ 665	2H	*	L07-1831-05	POWER TRANSFORMER	EG	
⚠ 665	2H	*	L07-1834-05	POWER TRANSFORMER	YM	
⚠ 665	2H	*	L07-1835-05	POWER TRANSFORMER	XT	
670	1A		T90-0182-15	LEAD WIRE ANTENNA		
671	1A		T90-0195-05	LOOP ANTENNA		
672	1A		T90-0198-05	ANTENNA ADAPTOR	EGT	
DISPLAY UNIT(X25-559X-XX)						
D22 -25			B30-2462-05	LED(GRN)		
D26 -30			B30-2463-05	LED(TWIN VRPG 561)		
D31 -36			B30-2462-05	LED(GRN)		
C1			C90-3210-05	ELECTRO 22UF 6.3WV		
C2			CK73FB1H223K	CHIP C 0.022UF K		
C3			CC73FSL1H102J	CHIP C 1000PF J		
C4			C90-3210-05	ELECTRO 22UF 6.3WV		
C5			CK73FB1H223K	CHIP C 0.022UF K		
C6			C90-3214-05	ELECTRO 100UF 6.3WV		
C9			CK73FB1H223K	CHIP C 0.022UF K		
C15			CK73FB1H103K	CHIP C 0.010UF K		
C20			C90-1827-05	ELECTRO 0.047UF 5.5WV		
C21			CK73FF1C105Z	CHIP C 1.0UF Z		
C22			CK73FB1H103K	CHIP C 0.010UF K		
C23 ,24			C90-3253-05	ELECTRO 1UF 50WV		
C26			CC73FCH1H220J	CHIP C 22PF J		
C27			CC73FCH1H180J	CHIP C 18PF J		
C30			C90-3214-05	ELECTRO 100UF 6.3WV		
C32			C90-3214-05	ELECTRO 100UF 6.3WV		
C35			CK73FB1H223K	CHIP C 0.022UF K		
C36			C90-3253-05	ELECTRO 1UF 50WV		
C41 ,42			CC73FCH1H221J	CHIP C 220PF J		
C43			CK73FB1H102K	CHIP C 1000PF K		
C44 -46			CK73FF1C105Z	CHIP C 1.0UF Z		
C47 ,48			CK73FB1E104K	CHIP C 0.10UF K		
⚠ F1			F06-2021-05	FUSE (SEMKO) (250V T2AL)	YM	
⚠ F6			F06-2021-05	FUSE (SEMKO) (250V T2AL)	YM	
			J19-3719-03	HOLDER		
CN8 -11			J13-0075-05	FUSE CLIP	YM	
L1 ,2			L40-1011-17	SMALL FIXED INDUCTOR(100UH,K)		
X1			L78-0605-05	RESONATOR (8.38MHZ)		

L:Scandinavia K:USA P:Canada R:Mexico
Y:PX(Far East, Hawaii) T:England E:Europe G:Germany
Y:AAFES(Europe) X:Australia M:Other Areas M, I:Other Areas

H : Chinese made

A : A DECK
B : B DECK

⚠ indicates safety critical components.

× New Parts
Parts without Parts No. are not supplied.
Les articles non mentionnes dans le Parts No. ne sont pas fournis.
Teile ohne Parts No. werden nicht geliefert.

No.3

Ref. No. 参照番号	Address 位置	New Parts 新	Parts No. 部品番号	Description 部品名／規格	Destination 仕向	Remarks 備考
X2			L77-2111-05	CRYSTAL RESONATOR(32.768KHZ)		
⚠ R100			RS14KB3D821J	FL-PROOF RS 820 J 2W		
R171,172			RS14KB3A221J	FL-PROOF RS 220 J 1W		
W210			R92-0670-05	CHIP R 0 OHM		
S1 -10			S40-1064-05	PUSH SWITCH		
S14			S40-1064-05	PUSH SWITCH		
S16 ,17			S40-1064-05	PUSH SWITCH		
S19 -30			S40-1064-05	PUSH SWITCH		
⚠ S32			S31-2322-05	SLIDE SWITCH	YM	
S31			T99-0548-05	SPEED DETECTOR		
D3			HZS2.7N(B2)	ZENER DIODE		
D3			RD2.7ES(B2)	ZENER DIODE		
D4			HZS5.6N(B2)	ZENER DIODE		
D4			RD5.6ES(B2)	ZENER DIODE		
D5			HSS104A	DIODE		
D5			1SS131	DIODE		
D7			HSS104A	DIODE		
D7			1SS131	DIODE		
D8			MA111	DIODE		
D9 -18			HSS104A	DIODE		
D9 -18			1SS131	DIODE		
D20 ,21			HSS104A	DIODE		
D20 ,21			1SS131	DIODE		
D38 ,39			MA111	DIODE	YM	
D39 -41			MA111	DIODE	X	
D41			MA111	DIODE	EGYMT	
D42			HSS104A	DIODE		
D42			1SS131	DIODE		
D43			MA111	DIODE	EGT	
D44			HZS5.6N(B2)	ZENER DIODE		
D44			RD5.6ES(B2)	ZENER DIODE		
D45			MA111	DIODE		
D51 -59			MA111	DIODE		
ED1			FIP8QMW5R	INDICATOR TUBE		
IC1		*	M38197MA-088FP	MOS-IC		
IC2			M66310FP	MOS-IC		
IC3			XR-1091ECP	IC(GE FILTER)		
IC4			BA10393F	IC		
IC5			S-80740AL	IC(VOLTAGE DETECTOR)		
Q1			2SC2412K	TRANSISTOR		
Q2			2SA1037K	TRANSISTOR	YM	
Q3 -6			2SC2412K	TRANSISTOR		
Q7 ,8			DTC124EU	DIGITAL TRANSISTOR		
Q9 -16			2SA1037K	TRANSISTOR		
Q17 ,18			DTC124EU	DIGITAL TRANSISTOR		
A1			W02-1046-05	ELECTRIC CIRCUIT MODULE		
A1			W02-1174-05	ELECTRIC CIRCUIT MODULE		
RECORD/PLAYBACK UNIT(X28-2620-00)						
C1 ,2			CK45FB1H561K	CERAMIC 560PF K		
C5 ,6			CE04LW1V100M	ELECTRO 10UF 35WV		
C7 ,8			CK45FB1H391K	CERAMIC 390PF K		
C9 ,10			CQ92FM1H223J	MYLAR 0.022UF J		
C11 ,12			CE04LW1C470M	ELECTRO 47UF 16WV		

L:Scandinavia K:USA P:Canada R:Mexico
Y:PX(Far East, Hawaii) T:England E:Europe G:Germany
Y:AAFES(Europe) X:Australia M:Other Areas M, I:Other Areas

A : A DECK
B : B DECK

⚠ indicates safety critical components.

PARTS LIST

* New Parts
Parts without Parts No. are not supplied.
Les articles non mentionnes dans le Parts No. ne sont pas fournis.
Telle ohne Parts No. werden nicht geliefert.

No.4

Ref. No. 参照番号	Address 位置	New Parts 新	Parts No. 部品番号	Description 部品名／規格	Destination 仕向	Remarks 備考
C13			CE04LW1V100M	ELECTRO 10UF 35WV		
C14			CQ93HP2A822J	MYLAR 8200PF J		
C15 -18			CC45FSL1H221J	CERAMIC 220PF J		
C19			CK45FB2H471K	CERAMIC 470PF K		
C20			CE04LW1V4R7M	ELECTRO 4.7UF 35WV		
C21 ,22			CK45FB1H332K	CERAMIC 3300PF K		
C23			CK45FF1H103Z	CERAMIC 0.010UF Z		
C24			CK45FB1H102K	CERAMIC 1000PF K		
C51 ,52			CC45FSL1H221J	CERAMIC 220PF J		
C53 ,54			CK45FB1H471K	CERAMIC 470PF K		
C55 ,56			CE04LW1V100M	ELECTRO 10UF 35WV		
C57 ,58			CK45FB1H391K	CERAMIC 390PF K		
C59 ,60			CE04LW1C470M	ELECTRO 47UF 16WV		
C61 ,62			CQ92FM1H153J	MYLAR 0.015UF J		
C63			CE04LW1V100M	ELECTRO 10UF 35WV		
C64			CK45FB1H102K	CERAMIC 1000PF K		
J1 ,2			J11-0098-05	WIRE CLAMPER		
L1 ,2			L40-1035-20	SMALL FIXED INDUCTOR(10MH,J)		
L3			L32-0542-05	BIAS OSCILATING COIL		
VR1			R12-3685-05	TRIMMING POT.(10K)		
VR2			R12-3686-05	TRIMMING POT.(22K)		
VR3 ,4			R12-0605-05	TRIMMING POT.(220)		
VR5 ,6			R12-5086-05	TRIMMING POT.(100K)		
VR7			R12-3685-05	TRIMMING POT.(10K)		
VR8			R12-3686-05	TRIMMING POT.(22K)		
VR9 ,10			R12-0606-05	TRIMMING POT.(330)		
K1			S51-2089-05	MAGNETIC RELAY		
K1			S76-0018-05	MAGNETIC RELAY		
D7 -9			HSS104	DIODE		
D7 -9			1SS133	DIODE		
D54 ,55			HSS104	DIODE		
D54 ,55			1SS133	DIODE		
IC1 ,2			TA8125S	IC(2CH PRE AMP)		
Q1 ,2			2SC3246	TRANSISTOR		
Q3 ,4			2SC1845(F,E)	TRANSISTOR		
Q5			2SA992(F,E)	TRANSISTOR		
Q6			2SA1175(F,E)	TRANSISTOR		
Q6			2SA933S(Q,R)	TRANSISTOR		
Q7			2SC1740S(Q,R)	TRANSISTOR		
Q7			2SC2785(F,E)	TRANSISTOR		
Q8			DTC124ES	DIGITAL TRANSISTOR		
Q8			UN4212	TRANSISTOR		
Q9 -12			2SC1740S(Q,R)	TRANSISTOR		
Q9 -12			2SC2785(F,E)	TRANSISTOR		
Q13 ,14			2SC3246	TRANSISTOR		
Q15			2SA1175(F,E)	TRANSISTOR		
Q15			2SA933S(Q,R)	TRANSISTOR		
Q16			2SC1740S(Q,R)	TRANSISTOR		
Q16			2SC2785(F,E)	TRANSISTOR		
Q17 -19			DTC124ES	DIGITAL TRANSISTOR		
Q17 -19			UN4212	TRANSISTOR		

L:Scandinavia K:USA P:Canada R:Mexico
Y:PX(Far East, Hawaii) T:England E:Europe G:Germany
Y:AAFES(Europe) X:Australia M:Other Areas M, I:Other Areas

A : A DECK
B : B DECK

⚠ indicates safety critical components.

* New Parts
Parts without Parts No. are not supplied.
Les articles non mentionnes dans le Parts No. ne sont pas fournis.
Telle ohne Parts No. werden nicht geliefert.

No.5

Ref. No. 参照番号	Address 位置	New Parts 新	Parts No. 部品番号	Description 部品名／規格	Destination 仕向	Remarks 備考
MAIN UNIT-TUNER(X29-2520-XX) : Y, M, X TYPE						
C1 ,2			CK73FB1H103K	CHIP C 0.010UF K		
C4			CE04LW1A470M	ELECTRO 47UF 10WV		
C5			CK73FB1H103K	CHIP C 0.010UF K		
C8			CK73FB1H103K	CHIP C 0.010UF K		
C10			CK73FB1H102K	CHIP C 1000PF K		
C11			CE04LW1H4R7M	ELECTRO 4.7UF 50WV		
C13			CE04LW1H010M	ELECTRO 1.0UF 50WV		
C14			CE04LW1H2R2M	ELECTRO 2.2UF 50WV		
C21 ,22		*	CQ93FMG1H163J	MYLAR 0.016UF J		
C23			CE04LW1H010M	ELECTRO 1.0UF 50WV		
C24			CE04LW1H3R3M	ELECTRO 3.3UF 50WV		
C25			CE04LW1V100M	ELECTRO 10UF 35WV		
C27			CK73FB1E473K	CHIP C 0.047UF K		
C28			CE04LW1V100M	ELECTRO 10UF 35WV		
C31			CE04LW1A470M	ELECTRO 47UF 10WV		
C32			CK73FB1H103K	CHIP C 0.010UF K		
C33			CC73FCH1H270J	CHIP C 27PF J		
C34			CC73FCH1H220J	CHIP C 22PF J		
C35 -38			CK73FB1H471K	CHIP C 470PF K		
C39			CE04LW1C470M	ELECTRO 47UF 16WV		
C40			CK73FB1H223K	CHIP C 0.022UF K		
C41			CE04LW1H010M	ELECTRO 1.0UF 50WV		
C42 ,43			CK73FB1H103K	CHIP C 0.010UF K		
C50			C91-0769-05	CERAMIC 0.01UF K		
C51			CE04LW1H010M	ELECTRO 1.0UF 50WV		
C52			CE04LW1C470M	ELECTRO 47UF 16WV		
C57			CC73FCH1H220J	CHIP C 22PF J		
C61			CK73FB1H103K	CHIP C 0.010UF K		
C62			CE04LW1C101M	ELECTRO 100UF 16WV		
C65			CE04LW1H010M	ELECTRO 1.0UF 50WV		
C66			CK73FB1H103K	CHIP C 0.010UF K		
C71			CE04LW1V100M	ELECTRO 10UF 35WV		
C72			CE04LW1C470M	ELECTRO 47UF 16WV		
C103-106			CE04LW1HR47M	ELECTRO 0.47UF 50WV		
C107			CK73FB1E473K	CHIP C 0.047UF K		
C112			CC73FSL1H101J	CHIP C 100PF J		
C114			CK73FB1H681K	CHIP C 680PF K		
C116			CC73FSL1H101J	CHIP C 100PF J		
C117			CK73FB1H681K	CHIP C 680PF K		
C118			CK73FB1H103K	CHIP C 0.010UF K		
C119			CC73FSL1H101J	CHIP C 100PF J		
C121			CE04LW1C470M	ELECTRO 47UF 16WV		
C122			CE04LW1V330M	ELECTRO 33UF 35WV		
C135,136			CQ93FMG1H682J	MYLAR 6800PF J	YM	
C182			CC73FSL1H150J	CHIP C 15PF J		
J1			E20-0476-05	LOCK TERMINAL BOARD(4P)		
J2		*	F10-0953-04	SHIELDING PLATE		
CF1 ,2			L72-0531-05	CERAMIC FILTER		
CF3			L72-0574-05	CERAMIC FILTER		
L7			L30-0911-05	AM IFT		
L10			L40-1091-17	SMALL FIXED INDUCTOR		
L11			L40-1021-14	SMALL FIXED INDUCTOR(1.0MH,K)		
L12			L40-1091-17	SMALL FIXED INDUCTOR		

L:Scandinavia K:USA P:Canada R:Mexico
Y:PX(Far East, Hawaii) T:England E:Europe G:Germany
Y:AAFES(Europe) X:Australia M:Other Areas M, I:Other Areas

A : A DECK
B : B DECK

⚠ indicates safety critical components.

PARTS LIST

RXD-C2/L

⋇ New Parts
Parts without Parts No. are not supplied.
Les articles non mentionnes dans le Parts No. ne sont pas fournis.
Teile ohne Parts No. werden nicht geliefert.

No.6

Ref. No. 参照番号	Address 位置	New Parts 新	Parts No. 部品番号	Description 部品名／規格	Destination 仕向	Remarks 備考
L103			L39-1328-05	COMBINATION COIL		
L106			L40-1091-17	SMALL FIXED INDUCTOR		
X1			L77-1122-05	CRYSTAL RESONATOR(7.2MHZ)		
X2			L78-0295-05	RESONATOR (456KHZ)		
R11			RS14KB3A820J	FL-PROOF RS 82 J 1W		
⚠ R31			RS14KB3D221J	FL-PROOF RS 220 J 2W		
⚠ R42			RD14NB2E101J	RD 100 J 1/4W		
R111			RD14NB2E470J	RD 47 J 1/4W		
R127,128			RD14NB2E101J	RD 100 J 1/4W		
W164,165			E31-0001-00	JUMPER WIRE (RESISTOR TYPE)		
W167			E31-0001-00	JUMPER WIRE (RESISTOR TYPE)		
W169			E31-0001-00	JUMPER WIRE (RESISTOR TYPE)		
W173-182			E31-0001-00	JUMPER WIRE (RESISTOR TYPE)		
W184-188			E31-0001-00	JUMPER WIRE (RESISTOR TYPE)		
W191-193			E31-0001-00	JUMPER WIRE (RESISTOR TYPE)		
W195-201			E31-0001-00	JUMPER WIRE (RESISTOR TYPE)		
S101			S62-0034-05	SLIDE SWITCH	YM	
D3			HZS5.1N(B2)	ZENER DIODE		
D3			RD5.1ES(B2)	ZENER DIODE		
D4			HZS3.3N(B2)	ZENER DIODE		
D4			RD3.3ES(B2)	ZENER DIODE		
D7			MA110	DIODE		
D8			HSS104	DIODE		
D8			1SS133	DIODE		
D11			HZS8.2N(B2)	ZENER DIODE		
D11			RD8.2ES(B2)	ZENER DIODE		
D111,112			MA110	DIODE		
IC1			LA1831A-KEN	ANALOGUE IC		
IC2			LC7218	IC(PLL SYNTHESIZER)		
IC12			NJM4565D	IC(OP AMP X2)		
Q1			2SC2714(R,O)	TRANSISTOR		
Q2			2SC1845(F,E)	TRANSISTOR		
Q3			2SC2458(Y,GR)	TRANSISTOR		
Q3			2SC3311A(Q,R)	TRANSISTOR		
Q7			2SC2412K	TRANSISTOR		
Q11			2SD863(E,F)	TRANSISTOR		
Q102			2SA1037K	TRANSISTOR		
Q104			2SA1037K	TRANSISTOR		
Q107,108			2SC2412K	TRANSISTOR	YM	
Q109,110			2SD1757K	TRANSISTOR		
Q111			2SA1037K	TRANSISTOR		
A1			W02-1190-05	FM FRONT-END ASSY		
MAIN UNIT-TUNER(X29-2532-70) : E, G, T TYPE						
C1 ,2			CK73FB1H103K	CHIP C 0.010UF K		
C4			CE04LW1C470M	ELECTRO 47UF 16WV		
C5			CK73FB1H223K	CHIP C 0.022UF K		
C6			CK73FB1E473K	CHIP C 0.047UF K		
C7			CE04LW1H3R3M	ELECTRO 3.3UF 50WV		
C8			CK73FB1H682K	CHIP C 6800PF K		
C9			CK73FB1H103K	CHIP C 0.010UF K		
C10			CC73FCH1H330J	CHIP C 33PF J		
C11			CE04HW1E100M	NP-ELEC 10UF 25WV		
C12			CE04LW1H010M	ELECTRO 1.0UF 50WV		

L:Scandinavia K:USA P:Canada R:Mexico
Y:PX(Far East, Hawaii) T:England E:Europe G:Germany
Y:AAFES(Europe) X:Australia M:Other Areas M, I:Other Areas

A : A DECK
B : B DECK

⚠ indicates safety critical components.

⋇ New Parts
Parts without Parts No. are not supplied.
Les articles non mentionnes dans le Parts No. ne sont pas fournis.
Teile ohne Parts No. werden nicht geliefert.

No.7

Ref. No. 参照番号	Address 位置	New Parts 新	Parts No. 部品番号	Description 部品名／規格	Destination 仕向	Remarks 備考
C13			CE04LW1HR33M	ELECTRO 0.33UF 50WV		
C14			CE04LW1H010M	ELECTRO 1.0UF 50WV		
C21 ,22			CK73FB1H682K	CHIP C 6800PF K		
C23			CE04LW1V100M	ELECTRO 10UF 35WV		
C25			CE04LW1V100M	ELECTRO 10UF 35WV		
C27			CE04LW1V100M	ELECTRO 10UF 35WV		
C28			CK73FB1E473K	CHIP C 0.047UF K		
C31			CE04LW1A470M	ELECTRO 47UF 10WV		
C32			CK73FB1H103K	CHIP C 0.010UF K		
C33			CC73FCH1H270J	CHIP C 27PF J		
C34			CC73FCH1H220J	CHIP C 22PF J		
C35 -38			CK73FB1H471K	CHIP C 470PF K		
C39			CE04LW1C470M	ELECTRO 47UF 16WV		
C40			CQ93FMG1H223J	MYLAR 0.022UF J		
C41			CE04HW1H2R2M	NP-ELEC 2.2UF 50WV		
C42 ,43			CK73FB1H103K	CHIP C 0.010UF K		
C47 ,48			CE04LW1H0R1M	ELECTRO 0.1UF 50WV		
C50			CK73FB1H103K	CHIP C 0.010UF K		
C51			CE04LW1H010M	ELECTRO 1.0UF 50WV		
C52			CE04LW1C470M	ELECTRO 47UF 16WV		
C57			CC73FCH1H220J	CHIP C 22PF J		
C65			CE04LW1H010M	ELECTRO 1.0UF 50WV		
C66			C91-0769-05	CERAMIC 0.01UF K		
C107			CK73FB1E473K	CHIP C 0.047UF K		
C151			CK73FB1E104K	CHIP C 0.10UF K		
C182			CC73FSL1H150J	CHIP C 15PF J		
J1			E20-0321-05	LOCK TERMINAL BOARD		
J2		⋇	F10-0963-04	SHIELDING PLATE		
CF1 ,2			L72-0536-05	CERAMIC FILTER		
L1 ,2			L40-1091-17	SMALL FIXED INDUCTOR		
L3			L30-0498-05	FM IFT		
L5			L79-0125-05	LC FILTER		
L7			L30-0911-05	AM IFT		
L10			L40-1091-17	SMALL FIXED INDUCTOR		
L103			L39-1325-05	COMBINATION COIL		
L106			L40-1091-17	SMALL FIXED INDUCTOR		
X1			L77-1122-05	CRYSTAL RESONATOR(7.2MHZ)		
X2			L78-0295-05	RESONATOR (456KHZ)		
R11			RD14NB2E470J	RD 47 J 1/4W		
⚠ R31			RS14KB3D221J	FL-PROOF RS 220 J 2W		
⚠ R42			RD14NB2E101J	RD 100 J 1/4W		
R111			RD14NB2E470J	RD 47 J 1/4W		
VR1			R12-3686-05	TRIMMING POT.(22K)		
VR2			R12-3685-05	TRIMMING POT.(10K)		
VR3			R12-1619-05	TRIMMING POT.(4.7K)		
W221			R92-0670-05	CHIP R 0 OHM		
W500			R92-0670-05	CHIP R 0 OHM		
W520			R92-0670-05	CHIP R 0 OHM		
W523			R92-0679-05	CHIP R 0 OHM		
W524-526			R92-0670-05	CHIP R 0 OHM		
W602-604			R92-0670-05	CHIP R 0 OHM		
W606-609			R92-0670-05	CHIP R 0 OHM		
W614			R92-0670-05	CHIP R 0 OHM		
W617-619			R92-0670-05	CHIP R 0 OHM		

L:Scandinavia K:USA P:Canada R:Mexico
Y:PX(Far East, Hawaii) T:England E:Europe G:Germany
Y:AAFES(Europe) X:Australia M:Other Areas M, I:Other Areas

A : A DECK
B : B DECK

⚠ indicates safety critical components.

RXD-C2/L

PARTS LIST

✱ New Parts
Parts without Parts No. are not supplied.
Les articles non mentionnes dans le Parts No. ne sont pas fournis.
Teile ohne Parts No. werden nicht geliefert.

No.8

Ref. No. 参照番号	Address 位置	New Parts 新	Parts No. 部品番号	Description 部品名／規格	Destination 仕向	Remarks 備考
W621-626			R92-0679-05	CHIP R 0 ØHM		
W627			R92-0670-05	CHIP R 0 ØHM		
W628			R92-0679-05	CHIP R 0 ØHM		
W629			R92-0670-05	CHIP R 0 ØHM		
W630,631			R92-0679-05	CHIP R 0 ØHM		
W632,633			R92-0670-05	CHIP R 0 ØHM		
W634			R92-0679-05	CHIP R 0 ØHM		
D3			HZS5.1N(B2)	ZENER DIØDE		
D3			RD5.1ES(B2)	ZENER DIØDE		
D4			HZS3.3N(B2)	ZENER DIØDE		
D4			RD3.3ES(B2)	ZENER DIØDE		
D5			HSS104	DIØDE		
D5			1SS133	DIØDE		
D111,112			HSS104	DIØDE		
D111,112			1SS133	DIØDE		
IC1			LA1851N	IC(AM,FM TUNER)		
IC2			LC7218	IC(PLL SYNTHESIZER)		
Q1			2SC2714(R,Ø)	TRANSISTØR		
Q2			2SC1845(F,E)	TRANSISTØR		
Q3 ,4			2SC2412K	TRANSISTØR		
Q5			2SA1037K	TRANSISTØR		
Q7			2SC2412K	TRANSISTØR		
Q102,103			2SA1037K	TRANSISTØR		
Q109,110			2SD1757K	TRANSISTØR		
Q111			2SA1037K	TRANSISTØR		
Q113,114			2SC2412K	TRANSISTØR		
Q116			2SC2412K	TRANSISTØR		
A1			W02-1166-15	FM FRØNT-END ASSY		
MAIN UNIT-EXCEPT TUNER(X29-254X-XX)						
C201			CE04LW1V100M	ELECTRØ 10UF 35WV		
C202			CE04LW1A470M	ELECTRØ 47UF 10WV		
C203			CC73FCH1H180J	CHIP C 18PF J		
C204			CK73FB1E104K	CHIP C 0.10UF K		
C205			CE04HW1H010M	NP-ELEC 1.0UF 50WV		
C206			CE04LW0J471M	ELECTRØ 470UF 6.3WV		
C207			CE04HW1H010M	NP-ELEC 1.0UF 50WV		
C208			CC73FSL1H101J	CHIP C 100PF J		
C209			CK73FB1H273K	CHIP C 0.027UF K		
C210			CK73FB1H681K	CHIP C 680PF K		
C211			CK73FB1H222K	CHIP C 2200PF K		
C212			CK73FB1H331K	CHIP C 330PF K		
C213			CC73FSL1H331J	CHIP C 330PF J		
C214			CE04LW1H010M	ELECTRØ 1.0UF 50WV		
C215			CK73FB1E104K	CHIP C 0.10UF K		
C216			CK73FB1H332K	CHIP C 3300PF K		
C217,218			CK73FB1E104K	CHIP C 0.10UF K		
C219			CK73FB1H273K	CHIP C 0.027UF K		
C220			CK73FB1H153K	CHIP C 0.015UF K		
C221,222			CE04LW1A101M	ELECTRØ 100UF 10WV		
C223			CK73FB1C224K	CHIP C 0.22UF K		
C224			CK73FB1E104K	CHIP C 0.10UF K		
C225,226			CK73FB1H472K	CHIP C 4700PF K		
C227			CK73FB1H102K	CHIP C 1000PF K		
C228,229			CK73FB1H223K	CHIP C 0.022UF K		

L:Scandinavia K:USA P:Canada R:Mexico
Y:PX(Far East, Hawaii) T:England E:Europe G:Germany
Y:AAFES(Europe) X:Australia M:Other Areas M, I:Other Areas

A : A DECK
B : B DECK

⚠ indicates safety critical components.

✱ New Parts
Parts without Parts No. are not supplied.
Les articles non mentionnes dans le Parts No. ne sont pas fournis.
Teile ohne Parts No. werden nicht geliefert.

No.9

Ref. No. 参照番号	Address 位置	New Parts 新	Parts No. 部品番号	Description 部品名／規格	Destination 仕向	Remarks 備考
C230,231			CE04HW1HR33M	NP-ELEC 0.33UF 50WV		
C232			CK73FB1E104K	CHIP C 0.10UF K		
C233			CE04LW1A101M	ELECTRØ 100UF 10WV		
C244,245			CE04LW1H2R2M	ELECTRØ 2.2UF 50WV		
C246			CE04LW1A470M	ELECTRØ 47UF 10WV		
C247			CE04LW0J331M	ELECTRØ 330UF 6.3WV		
C248			CE04LW1A101M	ELECTRØ 100UF 10WV		
C249			CK73FF1C105Z	CHIP C 1.0UF Z		
C250,251			CK73FB1H103K	CHIP C 0.010UF K		
C253			CK73FB1E104K	CHIP C 0.10UF K		
C254			CK73FF1C105Z	CHIP C 1.0UF Z		
C255-260			CC73FSL1H221J	CHIP C 220PF J		
C261			CE04HW1E100M	NP-ELEC 10UF 25WV		
C290,291			CK73FB1H152K	CHIP C 1500PF K		
C292			CC73FSL1H102J	CHIP C 1000PF J		
C293			CE04LW1A101M	ELECTRØ 100UF 10WV		
C294			CE04LW1A101M	ELECTRØ 100UF 10WV		
C295			CE04LW1A101M	ELECTRØ 100UF 10WV		
C296			CC73FCH1H220J	CHIP C 22PF J		
C297			CE04LW1V4R7M	ELECTRØ 4.7UF 35WV		
C401,402			CK73FB1H682K	CHIP C 6800PF K		
C403,404			CK73FB1H393K	CHIP C 0.039UF K		
C405,406			CC73FSL1H221J	CHIP C 220PF J		
C407-410			CE04LW1H010M	ELECTRØ 1.0UF 50WV		
C411,412			CQ93FMG1H333J	MYLAR 0.033UF J		
C413,414			CE04LW1HR47M	ELECTRØ 0.47UF 50WV		
C415,416			CE04LW1H2R2M	ELECTRØ 2.2UF 50WV		
C417,418			CE04LW1H0R1M	ELECTRØ 0.1UF 50WV		
C419,420			CE04LW1V100M	ELECTRØ 10UF 35WV		
C421,422			CE04LW1H2R2M	ELECTRØ 2.2UF 50WV		
C423,424			CE04LW1HR47M	ELECTRØ 0.47UF 50WV		
C425,426			CE04LW1A101M	ELECTRØ 100UF 10WV		
C427,428			CE04LW1H2R2M	ELECTRØ 2.2UF 50WV		
C429-432			CK73FB1H222K	CHIP C 2200PF K		
C501			CE04LW1H010M	ELECTRØ 1.0UF 50WV		
C502			CK73FB1H103K	CHIP C 0.010UF K		
C503			CE04LW1H0R1M	ELECTRØ 0.1UF 50WV		
C504			CE04LW1C101M	ELECTRØ 100UF 16WV		
C506			CE04LW1C220M	ELECTRØ 22UF 16WV		
C507			CE04LW1V100M	ELECTRØ 10UF 35WV		
C508			CE04LW1H2R2M	ELECTRØ 2.2UF 50WV		
C601,602			CC73FSL1H221J	CHIP C 220PF J		
C605,606			CE04LW1V100M	ELECTRØ 10UF 35WV		
C607,608			CK73FB1H471K	CHIP C 470PF K		
C609,610			CE04LW1H010M	ELECTRØ 1.0UF 50WV		
C611,612			CK73FB1H333K	CHIP C 0.033UF K		
C615,616			CE04LW1H0R1M	ELECTRØ 0.1UF 50WV		
C617,618			CE04LW1H220M	ELECTRØ 22UF 50WV		
C619-622			CC45FSL1H331J	CERAMIC 330PF J		
C623,624			CC45FSL1H101J	CERAMIC 100PF J		
C625,626			CE04LW1A470M	ELECTRØ 47UF 10WV		
C627-629			CE04LW1H470M	ELECTRØ 47UF 50WV		
C630			CE04KW2A4R7M	ELECTRØ 4.7UF 100WV		
C631-634			CQ93FMG1H104J	MYLAR 0.10UF J		
C635,636			CK45FF1H223Z	CERAMIC 0.022UF Z		

L:Scandinavia K:USA P:Canada R:Mexico
Y:PX(Far East, Hawaii) T:England E:Europe G:Germany
Y:AAFES(Europe) X:Australia M:Other Areas M, I:Other Areas

A : A DECK
B : B DECK

⚠ indicates safety critical components.

PARTS LIST

RXD-C2/L

✱ New Parts
Parts without Parts No. are not supplied.
Les articles non mentionnes dans le Parts No. ne sont pas fournis.
Teile ohne Parts No. werden nicht geliefert.

No.10

Ref. No. 参照番号	Address 位置	New Parts 新	Parts No. 部品番号	Description 部品名／規格	Destination 仕向	Remarks 備考
C637-639			CK73FB1H222K	CHIP C 2200PF K		
C640,641			CK73FB1H103K	CHIP C 0.010UF K		
C642			CK73FB1H331K	CHIP C 330PF K		
C643,644			CK73FB1H103K	CHIP C 0.010UF K		
C645			CE04LW1H010M	ELECTRO 1.0UF 50WV		
C646			CK73FB1E104K	CHIP C 0.10UF K		
C647			CE04LW1H010M	ELECTRO 1.0UF 50WV		
C648			CE04LW1C470M	ELECTRO 47UF 16WV		
C649			CE04LW1V100M	ELECTRO 10UF 35WV		
C650			CE04LW1H010M	ELECTRO 1.0UF 50WV		
C651			CK73FB1H103K	CHIP C 0.010UF K		
C652			CC73FSL1H221J	CHIP C 220PF J		
C653			CE04LW1A101M	ELECTRO 100UF 10WV		
C654			CE04LW1H010M	ELECTRO 1.0UF 50WV		
C655			CC73FCH1H220J	CHIP C 22PF J		
C656			CE04LW1V4R7M	ELECTRO 4.7UF 35WV		
C657			CC73FSL1H102J	CHIP C 1000PF J		
C658,659			CE04LW1H010M	ELECTRO 1.0UF 50WV		
C660			CK45FF1H103Z	CERAMIC 0.010UF Z		
C661,662			CE04LW1V100M	ELECTRO 10UF 35WV		
C663,664			CE04LW1H3R3M	ELECTRO 3.3UF 50WV		
C665,666			CK73FB1H221K	CHIP C 220PF K		
C667,668			CE04LW1H220M	ELECTRO 22UF 50WV		
C669,670			CE04LW1HR47M	ELECTRO 0.47UF 50WV		
C671			CC73FSL1H681J	CHIP C 680PF J		
C672			CK73FB1E823K	CHIP C 0.082UF K		
C673			CK73FB1E104K	CHIP C 0.10UF K		
C674			CK73FB1H222K	CHIP C 2200PF K		
C675,676			CK73FB1H223K	CHIP C 0.022UF K		
C677			CK73FB1H102K	CHIP C 1000PF K		
C678			CK73FB1H682K	CHIP C 6800PF K		
C679			CK73FB1E563K	CHIP C 0.056UF K		
C680			CK73FB1H682K	CHIP C 6800PF K		
C681			CK73FB1E563K	CHIP C 0.056UF K		
C682			CK73FF1C105Z	CHIP C 1.0UF Z		
C685			CE04LW1H010M	ELECTRO 1.0UF 50WV		
C686,687			CK73FB1H222K	CHIP C 2200PF K		
C694			CE04HW1H2R2M	NP-ELEC 2.2UF 50WV		
C695,696			CE04LW1A470M	ELECTRO 47UF 10WV		
C697,698			CK45FF1H103Z	CERAMIC 0.010UF Z	YMX	
C697,698			CQ93FMG1H104J	MYLAR 0.10UF J	EGT	
C699,700			C90-1780-05	ELECTRO 3300UF 50WV		
C701			CK45FB1H102K	CERAMIC 1000PF K		
C702			CE04LW1E470M	ELECTRO 47UF 25WV		
C703			CE04LW1C470M	ELECTRO 47UF 16WV		
C704			CE04LW1C101M	ELECTRO 100UF 16WV		
C705			CE04LW1V470M	ELECTRO 47UF 35WV		
C706			CK45FB1H102K	CERAMIC 1000PF K		
C707			CE04LW1A470M	ELECTRO 47UF 10WV		
C708			CE04LW1C470M	ELECTRO 47UF 16WV		
C709			CC45FSL1H101J	CERAMIC 100PF J		
C710			CE04LW1C222M	ELECTRO 2200UF 16WV		
C711			CE04LW1H101M	ELECTRO 100UF 50WV		
C712			CE04LW1V100M	ELECTRO 10UF 35WV		
C713			CK45FF1H223Z	CERAMIC 0.022UF Z		

L:Scandinavia K:USA P:Canada R:Mexico
Y:PX(Far East, Hawaii) T:England E:Europe G:Germany
Y:AAFES(Europe) X:Australia M:Other Areas M, I:Other Areas

A : A DECK
B : B DECK

⚠ indicates safety critical components.

✱ New Parts
Parts without Parts No. are not supplied.
Les articles non mentionnes dans le Parts No. ne sont pas fournis.
Teile ohne Parts No. werden nicht geliefert.

No.11

Ref. No. 参照番号	Address 位置	New Parts 新	Parts No. 部品番号	Description 部品名／規格	Destination 仕向	Remarks 備考
C714			CK73FF1C105Z	CHIP C 1.0UF Z		
C716			CE04LW1H010M	ELECTRO 1.0UF 50WV		
C718			CE04LW1V470M	ELECTRO 47UF 35WV		
C719			CK45FF1H103Z	CERAMIC 0.010UF Z		
C720			CE04LW1E222M	ELECTRO 2200UF 25WV		
C721			CE04LW1A101M	ELECTRO 100UF 10WV		
C722			CK45FF1H103Z	CERAMIC 0.010UF Z		
C723			CE04LW1A470M	ELECTRO 47UF 10WV		
C724,725			CE04LW1C470M	ELECTRO 47UF 16WV		
C726,727			CC45FSL1H220J	CERAMIC 22PF J		
C728,729			CQ93FMG1H333J	MYLAR 0.033UF J		
C755			CE04LW1C470M	ELECTRO 47UF 16WV		
C800			CK45FF1H103Z	CERAMIC 0.010UF Z		
C801,802			CK45FB1H102K	CERAMIC 1000PF K		
J601			E63-0115-15	PHONO JACK		
J602			E11-0220-05	MINIATURE PHONE JACK		
J603			E11-0209-05	PHONE JACK		
J604			E70-0045-05	LOCK TERMINAL BOARD		
⚠ F2 ,3			F05-3121-05	FUSE (SEMKO) (250V T3.15AL)		
⚠ F4			F05-1623-05	FUSE (SEMKO) (250V T1.6A)		
⚠ F5			F06-1022-05	FUSE (SEMKO) (250V T1AL)		
CN603-606			J13-0075-05	FUSE CLIP		
CN613-616			J13-0075-05	FUSE CLIP		
J608			J11-0098-05	WIRE CLAMPER		
L201			L40-1001-17	SMALL FIXED INDUCTOR(10UH,K)		
L202			L40-1091-17	SMALL FIXED INDUCTOR		
L401,402			L79-1201-05	LC FILTER		
L403,404			L40-1035-20	SMALL FIXED INDUCTOR(10MH,J)		
X201			L78-0299-05	RESONATOR (16.93MHZ)		
X202			L78-0605-05	RESONATOR (8.38MHZ)		
R296			RD14NB2E220J	RD 22 J 1/4W		
R524			RD14NB2E100J	RD 10 J 1/4W		
R540			RD14NB2E102J	RD 1.0K J 1/4W		
R637-640			RD14NB2E222J	RD 2.2K J 1/4W		
R643			RD14NB2E102J	RD 1.0K J 1/4W		
R644			RD14NB2E471J	RD 470 J 1/4W		
R645,646			RD14NB2E4R7J	RD 4.7 J 1/4W		
R647-650			RD14NB2E102J	RD 1.0K J 1/4W		
⚠ R715			RD14NB2E4R7J	RD 4.7 J 1/4W		
R720			RD14NB2E010J	RD 1.0 J 1/4W		
R733-736			RS14KB3AR22J	FL-PROOF RS 0.22 J 1W		
R742			RD14GB2E220J	FL-PROOF RD 22 J 1/4W		
R800			RD14AB2E1R0J	FL-PROOF RD 1.0 J 1/4W		
VR201			R12-3688-05	TRIMMING POT.(47K ﾌﾟﾗ)		
VR601			R31-0028-05	VARIABLE RESISTOR		
VR602			R31-0002-05	VARIABLE RESISTOR		
K601			S51-2094-05	MAGNETIC RELAY		
D201-209			MA110	DIODE		
D501			HSS104	DIODE		
D501			1SS133	DIODE		
D502			HZS5.1N(B2)	ZENER DIODE		

L:Scandinavia K:USA P:Canada R:Mexico
Y:PX(Far East, Hawaii) T:England E:Europe G:Germany
Y:AAFES(Europe) X:Australia M:Other Areas M, I:Other Areas

A : A DECK
B : B DECK

⚠ indicates safety critical components.

PARTS LIST

* New Parts
Parts without Parts No. are not supplied.
Les articles non mentionnes dans le Parts No. ne sont pas fournis.
Teile ohne Parts No. werden nicht geliefert.

No.12

Ref. No. 参照番号	Address 位置	New Parts 新	Parts No. 部品番号	Description 部品名／規格	Destination 仕向	Remarks 備考
D502			RD5.1ES(B2)	ZENER DIODE		
D601-604			MA110	DIODE		
D605			HZS10N(B2)	ZENER DIODE		
D605			RD10ES(B2)	ZENER DIODE		
D606-609			MA110	DIODE		
D610			HZS3.3N(B2)	ZENER DIODE		
D610			RD3.3ES(B2)	ZENER DIODE		
D611,612			S5688B	DIODE		
D611,612			1SR139-100	DIODE		
D613			HZS8.2N(B2)	ZENER DIODE		
D613			RD8.2ES(B2)	ZENER DIODE		
⚠ D614			D3SBA20F03	DIODE		
⚠ D614			RBV-402LFA	DIODE		
D615,616			HZS6.2N(B2)	ZENER DIODE		
D615,616			RD6.2ES(B2)	ZENER DIODE		
⚠ D621,622			HSS104	DIODE		
⚠ D621,622			1SS133	DIODE		
⚠ D623			S5688B	DIODE		
⚠ D623			1SR139-100	DIODE		
D625			HZS5.1N(B2)	ZENER DIODE		
D625			RD5.1ES(B2)	ZENER DIODE		
D626,627			HSS104	DIODE		
D626,627			1SS133	DIODE		
D630			MA110	DIODE		
⚠ D631			KBP02ML-6127	DIODE		
D632			MA110	DIODE		
⚠ D633			KBP02ML-6127	DIODE		
⚠ D634			MA110	DIODE		
⚠ D635			S5688B	DIODE		
⚠ D635			1SR139-100	DIODE		
IC201			AN8806SB	ANALOGUE IC		
IC202			BA6398FP	ANALOGUE IC		
IC203			MN662720RB	MOS-IC		
IC204			UPD78012BGC-652	MI-COM IC		
IC206			TA8409S	IC(MOTOR CONTROL)		
IC207			SM5875BM	MOS-IC		
IC401			HA12182NT	ANALOGUE IC		
IC601			NJU7313AM	ANALOGUE IC		
IC602			CXA1642M	ANALOGUE IC		
IC603,604			NJM4565M	IC(OP AMP X2)		
IC605			UPC1853CT-02	ANALOGUE IC		
IC606			NJM4565D	IC(OP AMP X2)		
⚠ IC607			STK4142/2K	CUSTOM IC		
Q201			2SA1534A(R,S)	TRANSISTOR		
Q202			2SA954(L,K)	TRANSISTOR		
Q203			2SC2412K	TRANSISTOR		
Q204			DTA115EU	DIGITAL TRANSISTOR		
Q205			DTC124EU	DIGITAL TRANSISTOR		
Q401,402			DTC124EU	DIGITAL TRANSISTOR		
Q403-406			2SD1757K	TRANSISTOR		
Q503			DTA124ES	DIGITAL TRANSISTOR		
Q503			UN4112	TRANSISTOR		
Q504			2SC2412K	TRANSISTOR		
Q505			2SC3940A(R,S)	TRANSISTOR		
Q506			DTA124ES	DIGITAL TRANSISTOR		

L:Scandinavia K:USA P:Canada R:Mexico
Y:PX(Far East, Hawaii) T:England E:Europe G:Germany
Y:AAFES(Europe) X:Australia M:Other Areas M, I:Other Areas

A : A DECK
B : B DECK

⚠ indicates safety critical components.

* New Parts
Parts without Parts No. are not supplied.
Les articles non mentionnes dans le Parts No. ne sont pas fournis.
Teile ohne Parts No. werden nicht geliefert.

No.13

Ref. No. 参照番号	Address 位置	New Parts 新	Parts No. 部品番号	Description 部品名／規格	Destination 仕向	Remarks 備考
Q506			UN4112	TRANSISTOR		
Q507			DTC124ES	DIGITAL TRANSISTOR		
Q507			UN4212	TRANSISTOR		
Q513			2SC2412K	TRANSISTOR		
Q601,602			2SC2878(B)	TRANSISTOR		
Q603			2SA1048(Y,GR)	TRANSISTOR		
Q603			2SA1309A(Q,R)	TRANSISTOR		
Q604,605			2SC1845(F,E)	TRANSISTOR		
Q606			2SC2003(L,K)	TRANSISTOR		
Q607			2SC2458(Y,GR)	TRANSISTOR		
Q607			2SC3311A(Q,R)	TRANSISTOR		
⚠ Q608			2SD2012	TRANSISTOR		
⚠ Q608			2SD2061	TRANSISTOR		
Q609			2SC2458(Y,GR)	TRANSISTOR		
Q609			2SC3311A(Q,R)	TRANSISTOR		
⚠ Q610			2SD2012	TRANSISTOR		
⚠ Q610			2SD2061	TRANSISTOR		
Q611			2SC2458(Y,GR)	TRANSISTOR		
Q611			2SC3311A(Q,R)	TRANSISTOR		
Q612,613			2SA1048(Y,GR)	TRANSISTOR		
Q612,613			2SA1309A(Q,R)	TRANSISTOR		
⚠ Q614,615			2SD2012	TRANSISTOR		
⚠ Q614,615			2SD2061	TRANSISTOR		
Q616,617			2SC2458(Y,GR)	TRANSISTOR		
Q616,617			2SC3311A(Q,R)	TRANSISTOR		
Q618			DTA113ZS	DIGITAL TRANSISTOR		
Q618			UN4119	TRANSISTOR		
Q619-621			2SC2458(Y,GR)	TRANSISTOR		
Q619-621			2SC3311A(Q,R)	TRANSISTOR		
Q622,623			2SC2878(B)	TRANSISTOR		
CD MECHANISM ASSY(X92-2028-X1)						
101	3B	*	A10-2947-21	CHASSIS (MAIN)		
102	2B		A11-0735-03	SUB CHASSIS (FRAME)		
103	1A		A11-0737-02	SUB CHASSIS (CLAMPER)		
DM	1B		A11-0733-05	SUB CHASSIS ASSY (DISC MOTOR)		
111	1B		D10-2325-04	ROD		
112	2B		D10-3253-03	SLIDER		
113	3A		D13-0975-04	GEAR (INTERMEDIATE)		
114	3A		D13-0976-03	GEAR (CENTER)		
115	3A		D13-0977-03	GEAR (CARRIER)		
116	3A		D13-0978-03	GEAR (IDLER)		
117	2A		D13-0979-03	GEAR (MAIN)		
118	2A		D13-0980-02	LACK (GEAR)		
119	2B		D13-0894-05	GEAR (MOTOR)		
120	1B		D13-0895-05	GEAR (INTERMEDIATE)		
121	1B		D13-0896-05	GEAR (FEED)		
125	3B		D15-0328-04	MOTOR PULLEY		
126	3A		D15-0329-03	PULLEY		
127	3B		D16-0329-04	BELT		
131	2B		E35-0420-05	LEAD WIRE		
132	1B	*	E35-1013-15	WIRING HARNESS		
133	1B	*	E35-1014-05	WIRING HARNESS		
134	2B,3B		E35-1015-05	WIRING HARNESS		
135	2B		G01-3464-04	COMPRESSION SPRING		

L:Scandinavia K:USA P:Canada R:Mexico
Y:PX(Far East, Hawaii) T:England E:Europe G:Germany
Y:AAFES(Europe) X:Australia M:Other Areas M, I:Other Areas

A : A DECK
B : B DECK

⚠ indicates safety critical components.

PARTS LIST

RXD-C2/L

* New Parts
Parts without Parts No. are not supplied.
Les articles non mentionnes dans le Parts No. ne sont pas fournis.
Teile ohne Parts No. werden nicht geliefert.

No.14

Ref. No. 参照番号	Address 位置	New Parts 新	Parts No. 部品番号	Description 部品名／規格	Destination 仕向	Remarks 備考
136	1B		G10-0146-04	NON-WOVEN FABRIC		
140	1B,2B		J02-1058-15	INSULATOR		
141	1A		J11-0180-03	CLAMPER		
142	2A		J99-0513-01	TRAY		
S1	3B		S33-2062-05	LEVER SWITCH (OPEN/CLOSE)		
S2	2B		S33-1022-05	LEVER SWITCH (SLT)		
155	1A		T50-1058-04	YOKE		
156	1A		T99-0503-15	MAGNET		
FM	2B		T42-0566-05	DC MOTOR (FEED MOTOR)		
LM	3B		T42-0609-05	DC MOTOR (LOADING MOTOR)		
PU	1B		T25-0010-05	OPTICAL PICKUP HEAD		
J1			E20-0476-05	LOCK TERMINAL BOARD(4P)	YMX	
CASSETTE MECHANISM ASSY(A : D40-1343-X5 , B : D40-1345-X5)						
401	2C		A10-3174-08	HEAD CHASSIS		
405	2E		D01-0175-08	FLYWHEEL (R) ASSY		
406	1D		D01-0176-08	FLYWHEEL (L) ASSY		
407	1C		D10-3468-08	INTER LOCK ARM (L)(A MECHA)		
408	2D		D10-3469-08	INTER LOCK ARM (R)(B MECHA)		
409	1E		D10-3470-08	SHIFT LEVER		
410	2E		D10-3471-08	HEAD CHANGE ARM		
411	1E		D10-3472-08	CAM GEAR		
412	1C		D10-3476-08	EJECT LEVER (L) (A MECHA)		
413	2E		D10-3477-08	EJECT LEVER (R) (B MECHA)		
414	2C		D10-3478-08	SELET LEVER		
415	1D		D10-3479-08	CHASSIS OS ASSY		
416	2C		D10-3480-08	C/R LEVER		
420	2C		D13-0981-08	ROTATION GEAR		
421	1C		D13-1616-08	REW GEAR		
422	1C,2D		D13-1617-08	REEL GEAR		
423	1D		D13-1618-08	IDLER GEAR		
424	2C		D13-1621-08	RETURN GEAR		
425	1E		D13-1622-08	TRIGGER ARM		
426	2D		D14-0367-08	PINCH ARM (R) ASSY		
427	2C		D14-0368-08	PINCH ARM (L) ASSY		
430	1D		D15-0369-08	IDLER PULLEY		
431	2E		D16-0375-08	DRIVE BELT		
432	2E		D16-0376-08	CLUTCH BELT		
433	1C,2C		D19-0270-18	REEL CAP (A)		
434	1D		D19-0287-08	CLUTCH ARM ASSY		
440	1E		E35-0396-08	15P FLAT RIBBON WIRE		
441	2C		E35-0985-08	3P HEAD WIRE ASSY (A MECHA)		
441	2C		E35-0987-08	5P HEAD WIRE ASSY (B MECHA)		
442	1E		E35-0986-08	MOTOR WIRE		
445	1C,2D		G01-3709-08	B.T SPRING		
446	1D		G01-3710-08	SHIFT LEVER SP		
447	1E		G01-3711-08	TRIGGER ARM SP		
448	2E		G01-3712-08	HEAD CHANGE ARM SP		
449	1C,2E		G01-3713-08	EJECT SP		
450	2C		G01-3714-08	C/R LEVER SP		
451	2C		G01-3715-08	SELECT SP		
452	2C		G01-3716-08	SHIFT SP		

L:Scandinavia K:USA P:Canada R:Mexico
Y:PX(Far East, Hawaii) T:England E:Europe G:Germany
Y:AAFES(Europe) X:Australia M:Other Areas M, I:Other Areas

A : A DECK
B : B DECK

⚠ indicates safety critical components.

* New Parts
Parts without Parts No. are not supplied.
Les articles non mentionnes dans le Parts No. ne sont pas fournis.
Teile ohne Parts No. werden nicht geliefert.

No.15

Ref. No. 参照番号	Address 位置	New Parts 新	Parts No. 部品番号	Description 部品名／規格	Destination 仕向	Remarks 備考
453	1C		G01-3717-08	INTER LOCK SP (L)		
454	2D		G01-3723-08	INTER LOCK SP (R)		
455	2C		G01-3718-08	RETURN SPR		
456	2C		G01-3719-08	FWD SPR		
457	2C		G01-3720-08	HEAD RETURN PLATE SP		
458	2D		G01-3721-08	BRAKE SP (R)		
459	1D		G01-3722-08	BRAKE SP (L)		
460	1D		G01-3724-08	CLUTCH ARM SPRING (B)		
461	1D		G01-3725-08	CLUTCH SP		
462	1D		G02-0913-08	PACK SPRING		
463	2C		G02-1043-08	AZIMUTH SPR		
465	2C		G11-2117-08	HEAD WIRE CLAMP		
466	1D		G11-2205-08	TUBE		
467	2D		G16-0791-08	REFLECT SEAL		
470	1E		J19-3652-08	CABLE HOLDER		
471	2C		J19-3709-08	HEAD BASE		
472	2C		J21-6135-08	HEAD RETURN PLATE		
473	2C		J21-6184-08	HEAD PLATE ASSY		
474	2C		J42-0183-08	REEL BUSH		
475	2D		J69-0086-08	FILAMENT TAPE		
AA			N19-1316-08	POLY WASHER		
AB			N19-1354-08	NYLON WASHER		
AC			N19-1355-08	NYLON WASHER		
AD			N19-1384-08	POLY WASHER		
AE			N19-1385-08	POLY WASHER		
AF			N19-1386-08	POLY WASHER		
AG			N19-1387-08	TEFRON WASHER		
AH			N19-1388-08	POLY WASHER		
AK			N09-2900-08	SCREW		
S			N09-1497-08	TAP TITE SCREW		
T			N09-2871-08	TAPPING SCREW		
V			N09-2876-08	HEAD SCREW		
W			N09-2901-08	BIND TAP TITE SCREW		
X			N09-3112-08	AZIMUTH SCREW		
Y			N19-1287-08	POLY WASHER		
Z			N19-1288-08	POLY WASHER		
480	1E,2E		S74-0033-08	REC SWITCH		
481	1E,2E		S74-0042-08	PLAY SWITCH		
484	1E		T94-0233-08	SOLENOID ASSY		
485	1E,2E		T95-0125-08	PHOTO INTERRUPTER		
MM	1E		T42-0687-08	MOTOR ASSY		
PH	2C		T31-0066-08	ROTATION HD MP10P-AB215		A
RPEH	1C		T31-0020-08	ROTATION HD YK56R-AA405		B

L:Scandinavia K:USA P:Canada R:Mexico
Y:PX(Far East, Hawaii) T:England E:Europe G:Germany
Y:AAFES(Europe) X:Australia M:Other Areas M, I:Other Areas

A : A DECK
B : B DECK

⚠ indicates safety critical components.

RXD-C2/L

SPECIFICATIONS

Amplifier section

Rated power output
(IHF'66) 1kHz, 10 % T.H.D. at 6 Ω ..... 37 W + 37 W

Input sensitivity / Impedance
AUX ..... 200 mV / 47 kΩ
MIC ..... 3.5 mV / 47 kΩ

Total harmonic distortion
..... 0.2 % (1 kHz, 1/2 rated power, 6 Ω)
Signal to noise ratio
AUX ..... 80 dB (IHF'66)

FM Tuner section

Tuning frequency range ..... 87.5 MHz ~ 108 MHz
Sensitivity (IHF) ..... 13.2 dBf (1.2 μV at 75 Ω)

AM Tuner section

Tuning frequency range
9 kHz step ..... 531 kHz ~ 1,602 kHz
10 kHz step ..... 530 kHz ~ 1,610 kHz
Usable sensitivity ..... 12 μV / (500 μV / m)

Cassette deck section

Track ..... 4-track, 2-channel stereo
Recording system ..... AC bias system (Frequency: 105 kHz)

Heads
A deck Playback head 1
B deck Playback / recording head 1
Erasing head 1

Motors
A deck 1
B deck 1
Fast winding time ..... Approx. 120 seconds (C-60 tape)
Wow and flutter ..... 0.15 % (W.R.M.S.)

KENWOOD follows a policy of continuous advancements in development.

For this reason specifications may be changed without notice.

Note:

Component and circuitry are subject to modification to insure best operation under differing local conditions. This manual is based on the general market (M) standard, and provides information on regional circuit modification through use of alternate schematic diagrams, and information on regional component variations through use of parts list.

CD player section

Laser ..... Semiconductor laser
Playing rotation ..... 200 rpm ~ 500 rpm (CLV)
Wow & Flutter ..... Unmeasurable Limit

General

Power consumption ..... 110 W
Dimensions ..... W : 270 mm
H : 305 mm
D : 337 mm
Weight (net) ..... 6.8 kg

KENWOOD CORPORATION
14-6, Dogenzaka 1-chome, Shibuya-ku, Tokyo, 150 Japan
KENWOOD SERVICE CORPORATION
P.O. BOX 22745, 2201 East Dominguez St., Long Beach, CA 90801-5745, U.S.A.
KENWOOD ELECTRONICS CANADA INC.
6070 Kestrel Road, Mississauga, Ontario, Canada L5T 1S8
KENWOOD ELECTRONICS LATIN AMERICA S.A.
P.O. BOX 55-2791, Piso 6 Plaza Chase, Cl. 47 y Aquilino de la Guardia, Panama, Republic de Panama
TRIO-KENWOOD U.K. LIMITED
Kenwood House, Dwight Road, Watford, Herts, WD1 8EB, United Kingdom
KENWOOD ELECTRONICS BENELUX N.V.
Mechelsesteenweg 418 B-1930 Zaventem, Belgium
KENWOOD ELECTRONICS DEUTSCHLAND GMBH
Rembrücker Str. 15, 63150 Heusenstamm, Germany
TRIO-KENWOOD FRANCE S.A.
13 Boulevard Ney, 75018 Paris, France
KENWOOD ELECTRONICS ITALIA S.p.A.
Via G. Sirtori, 7/9 20129 Milano, Italy
KENWOOD ESPANA S.A.
Bolivia, 239-08020 Barcelona, Spain
KENWOOD ELECTRONICS AUSTRALIA PTY. LTD. (A.C.N. 001 499 074)
P.O. BOX 504, 8 Figtree Drive, Australia Centre, Homebush, N.S.W. 2140, Australia
KENWOOD & LEE ELECTRONICS, LTD.
Unit 3712-3724, Level 37 Tower 1, Metroplaza, 223 Hing Fong Road, Kwai Fong N.T. Hong Kong
KENWOOD ELECTRONICS SINGAPORE PTE LTD
No. 1 Genting Lane # 07-00, KENWOOD Building, Singapore, 1334
KENWOOD ELECTRONICS (MALAYSIA) SDN BHD
10 th Floor, Block B, Wisma Semantan, No. 12, Jalan Gelenggang, Bukit Damansara, 50490 Kuala Lumpur, Malaysia