Ref. No. 3791
122004

ONKYO SERVICE MANUAL

DVD PLAYER
MODEL DV-SP1000

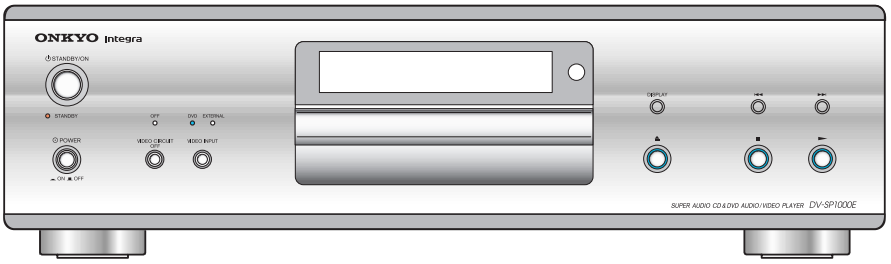

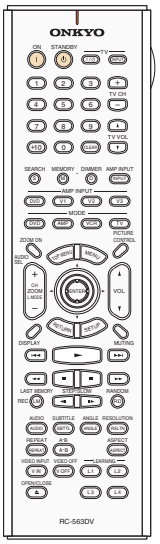

RC-563DV

Black, Silver and Golden models

BUDC1N, SUDC1N	120V AC, 60Hz
BUPP2P, SUPP2P	230-240V AC, 50Hz
GUGK3P, GUGR6P	220-230V AC, 50/60Hz
GUWT3P	120/220-230V AC, 50/60Hz

SAFETY-RELATED COMPONENT WARNING!!

COMPONENTS IDENTIFIED BY MARK ⚠ ON THE SCHEMATIC DIAGRAM AND IN THE PARTS LIST ARE CRITICAL FOR RISK OF FIRE AND ELECTRIC SHOCK. REPLACE THESE COMPONENTS WITH ONKYO PARTS WHOSE PART NUMBERS APPEAR AS SHOWN IN THIS MANUAL.

MAKE LEAKAGE-CURRENT OR RESISTANCE MEASUREMENTS TO DETERMINE THAT EXPOSED PARTS ARE ACCEPTABLY INSULATED FROM THE SUPPLY CIRCUIT BEFORE RETURNING THE APPLIANCE TO THE CUSTOMER.

ONKYO®
IMAGINATIVE SIGHT & SOUND

SPECIFICATIONS

Signal System	North American models:	NTSC
	Other models:	PAL/NTSC
Composite Video Output/Impedance		1.0 V(p-p)/75 ohm negative sync, RCA/phono
S-Video Output/Impedance		Y: 1.0 V(p-p)/75 ohm negative sync, 4-pin mini DIN
		C: 0.286 V(p-p)/75 ohm
Component Video Output/Impedance		Y: 1.0 V(p-p)/75 ohm
		PB/PR: 0.7 V(p-p)/75 ohm, RCA/phono, BNC (except Canadian model)
AV Connector (European only)		1.0 V(p-p)/75 ohm, Scart
Frequency Response	DVD Audio	4 Hz-88 kHz (192 kHz)
	DVD Linear Sound	4 Hz-44 kHz (96 kHz)
		4 Hz-22 kHz (48 kHz)
	Audio CD	4 Hz-20 kHz (44.1 kHz)
S/N Ratio		112 dB
Audio Dynamic Range		106 dB
THD (Total Harmonic Distortion)		0.002 % (1 kHz)
Wow and Flutter		Below threshold of measurability
Audio Output (Digital/Optical)		-22.5 dBm
Audio Output/ Impedance (Digital/Coaxial)		0.5V p-p / 75 ohm
Audio Output/ Impedance (Analog)		2.0 V(rms) / 320 ohm
HDMI socket (HDMI OUT)		19-pin
i.LINK socket		4-pin (S400)
Power Supply	North American models:	AC 120 V, 60 Hz
	European models:	AC 230-240 V, 50 Hz
	Korean models:	AC 220-230 V, 50/60 Hz
	Asian models:	AC 120/220-230 V, 50/60 Hz
Power Consumption		48 W
Stand-by Power Consumption		7.1 W
Dimensions (W x H x D)		435 W x 123 H x 374 D mm 17. 1/8 W x 4. 13/16 H x 14. 3/4 D inches
Weight		12.1 kg 26.7 lbs
Operation Condition Temperature		5˚C - 35˚C (41˚F - 95˚F)
Disc Compatibility		DVD-Video, DVD-Audio, SACD, DVD-R (Video Mode), DVD-RW (Video Mode/VR mode), Music CD/CD-R/RW, Video CD, MP3, JPEG Disc that has not been property finalized may only be partially playable or not playable at all.

Specifications and features subject to change without notice.

SERVICE PROCEDURES-1

This set employs a laser. Therefore, be sure to follow carefully the instructions below when servicing.

WARNING!!

SERVICE WARNING : DO NOT APPROACH THE LASER EXIT WITH THE EYE TOO CLOSELY. IN CASE IT IS NECESSARY TO CONFIRM LASER BEAM EMISSION, BE SURE TO OBSERVE FROM A DISTANCE OF MORE THAN 30cm FROM THE SURFACE OF THE OBJECTIVE LENS ON THE OPTICAL PICKUP BLOCK.

Laser Diode Properties

DVD
Wavelength: 650 nm
Laser output: 0.43 mW

CD
Wavelength: 780 nm
Laser output: 0.14 mW

WARNING

WARNING:
TO REDUCE THE RISK OF FIRE OR ELECTRIC SHOCK, DO NOT EXPOSE THIS APPLIANCE TO RAIN OR MOISTURE.

CAUTION:
TO REDUCE THE RISK OF ELECTRIC SHOCK, DO NOT REMOVE COVER (OR BACK). NO USER-SERVICEABLE PARTS INSIDE. REFER SERVICING TO QUALIFIED SERVICE PERSONNEL.

The lightning flash with arrowhead symbol, within an equilateral triangle, is intended to alert the user to the presence of uninsulated "dangerous voltage" within the product's enclosure that may be of sufficient magnitude to constitute a risk of electric shock to persons.

The exclamation point within an equilateral triangle is intended to alert the user to the presence of important operating and maintenance (servicing) instructions in the literature accompanying the appliance.

LASER WARNING

This unit contains a semiconductor laser system and is classified as a "CLASS 1 LASER PRODUCT". So, to use this model properly, read this Instruction Manual carefully. In case of any trouble, please contact the store where you purchased the unit. To prevent being exposed to the laser beam, do not try to open the enclosure.

CAUTION:
VISIBLE LASER RADIATION WHEN OPEN AND INTERLOCK FAILED OR DEFEATED. DO NOT STARE INTO BEAM.

CAUTION:
THIS PRODUCT UTILIZES A LASER. USE OF CONTROLS OR ADJUSTMENTS OR PERFORMANCE OF PROCEDURES OTHER THAN THOSE SPECIFIED HEREIN MAY RESULT IN HAZARDOUS RADIATION EXPOSURE.

The label on the right is applied on the rear panel except for USA and Canadian models.

1. This unit is a CLASS 1 LASER PRODUCT and employs a laser inside the cabinet.
2. To prevent the laser from being exposed, do not remove the cover. Refer servicing to qualified personnel.

LASER BEAM CAUTION LABEL

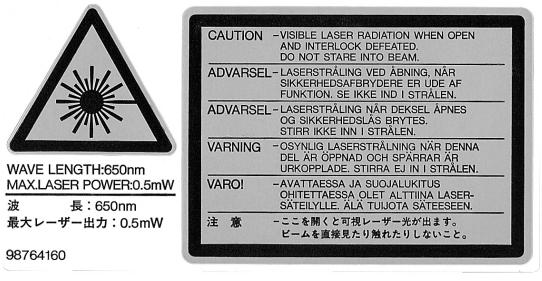

SERVICE PROCEDURE

1. Replacing the fuses

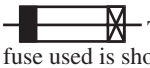

This symbol located near the fuse indicates that the fuse used is show operating type, For continued protection against fire hazard, replace with same type fuse , For fuse rating, refer to the marking adjest to the symbol.

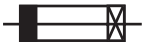

Ce symbole indique que le fusible utilise est e lent. Pour une protection permanente, n'utiliser que des fusibles de meme type. Ce demier est indique la qu le present symbol est apposre.

REF. NO.	PART NO.		DESCRIPTION	
F001 or	252158	⚠	1.6A-UL/T-237	**Only <DC1N>**
	252252		1.6A-T/UL-ST2	**Only <DC1N>**
F001 or	252075		2.5A-SW-EAK	**Except <DC1N>**
	252275		2.5A-SE-TL250V	**Except <DC1N>**
F9001 or	252160		2.5A-UL/T-237	**Only <DC1N>**
	252254		2.5A-T/UL-ST2	**Only <DC1N>**
F9001 or	252075		2.5A-SE-EAK	**Except <DC1N>**
	252275		2.5A-SE-TL250V	**Except <DC1N>**

NOTE:
<DC1N>: U.S.A., Canadian region

SERVICE PROCEDURES-2

2. Safety-check out

(Only U.S.A. model)

After correcting the original service problem perform the following safety check before releasing the set to the customer

Connect the insulating-resistance tester between the plug of power supply cord and terminal GND on the back panel.

Specifications: More than 10M ohm at 500V

INITIALIZING

Factory-shipped condition

Push button "ON" (Mechanical SW) Except **<DC1N>**

Press the [**STOP**] and [**STANDBY**] same time.

(Wait until FL display "No Disc") .

Push button "**STANDBY**".

Others

SURR. MODE Switch -------- "1" position

Mechanical power switch ---- ON

Confirm version of Microprocessor

At power ON.

1. Press "**DISPLAY**" key and "**VIDEO OFF**" key at same time.
2. Press "**DISPLAY**" key.

a) System microprocessor

b) Release version of System microprocessor

c) Loader microprocessor version

d) B/E version of microprocessor

e) F/E version of microprocessor

f) CPPM

g) FL display microprocessor

h) Video microprocessor

i) Loader of video microprocessor

j) iLINK microprocessor

k) Model name

l) Destination

m) All segment of TL tube

Note: Regional cod is displayed on the TV monitor.

EXPLODED VIEW-1

OVERALL

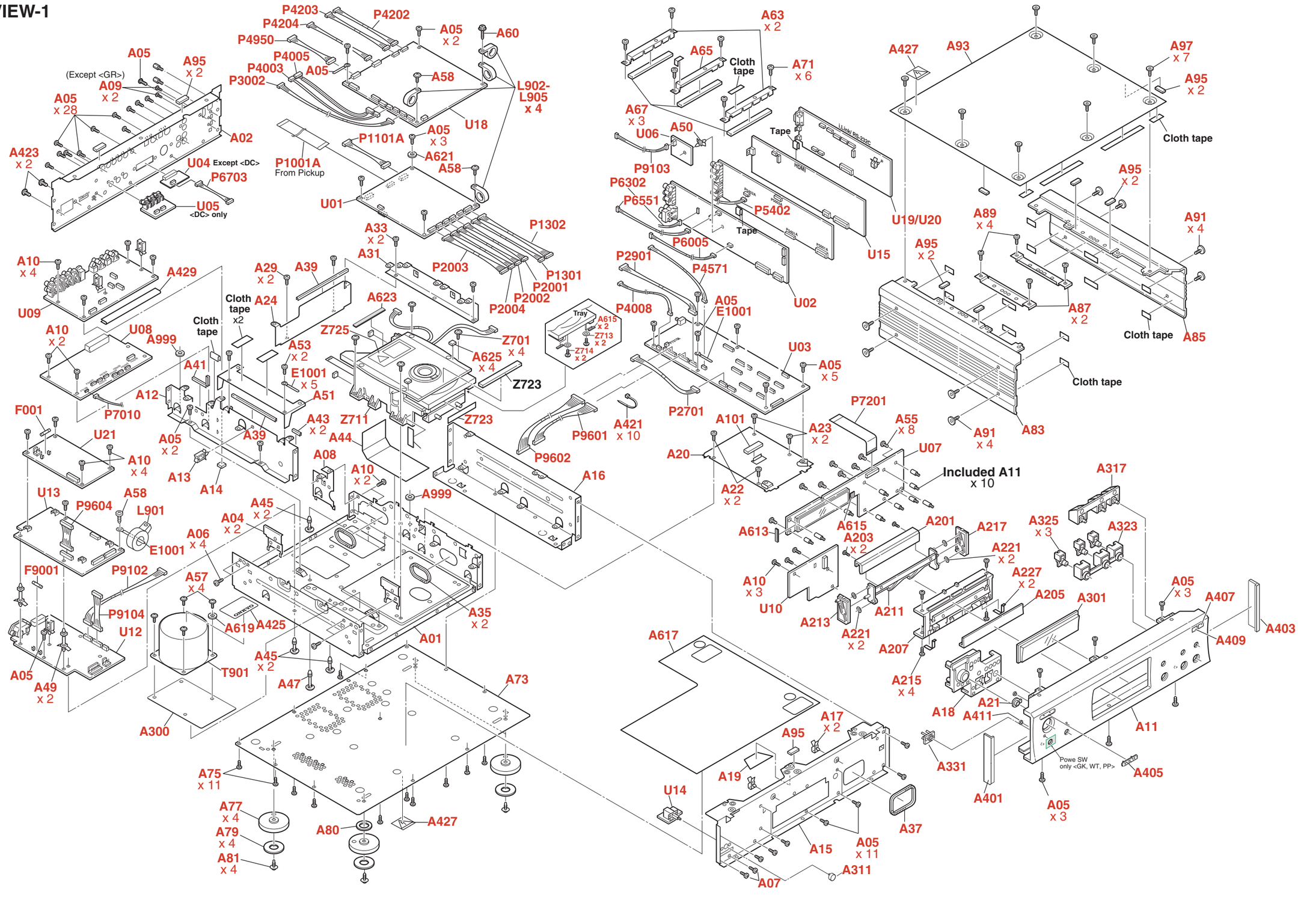

BLOCK DIAGRAM-1

DVD MAIN BOARD NADG-8257

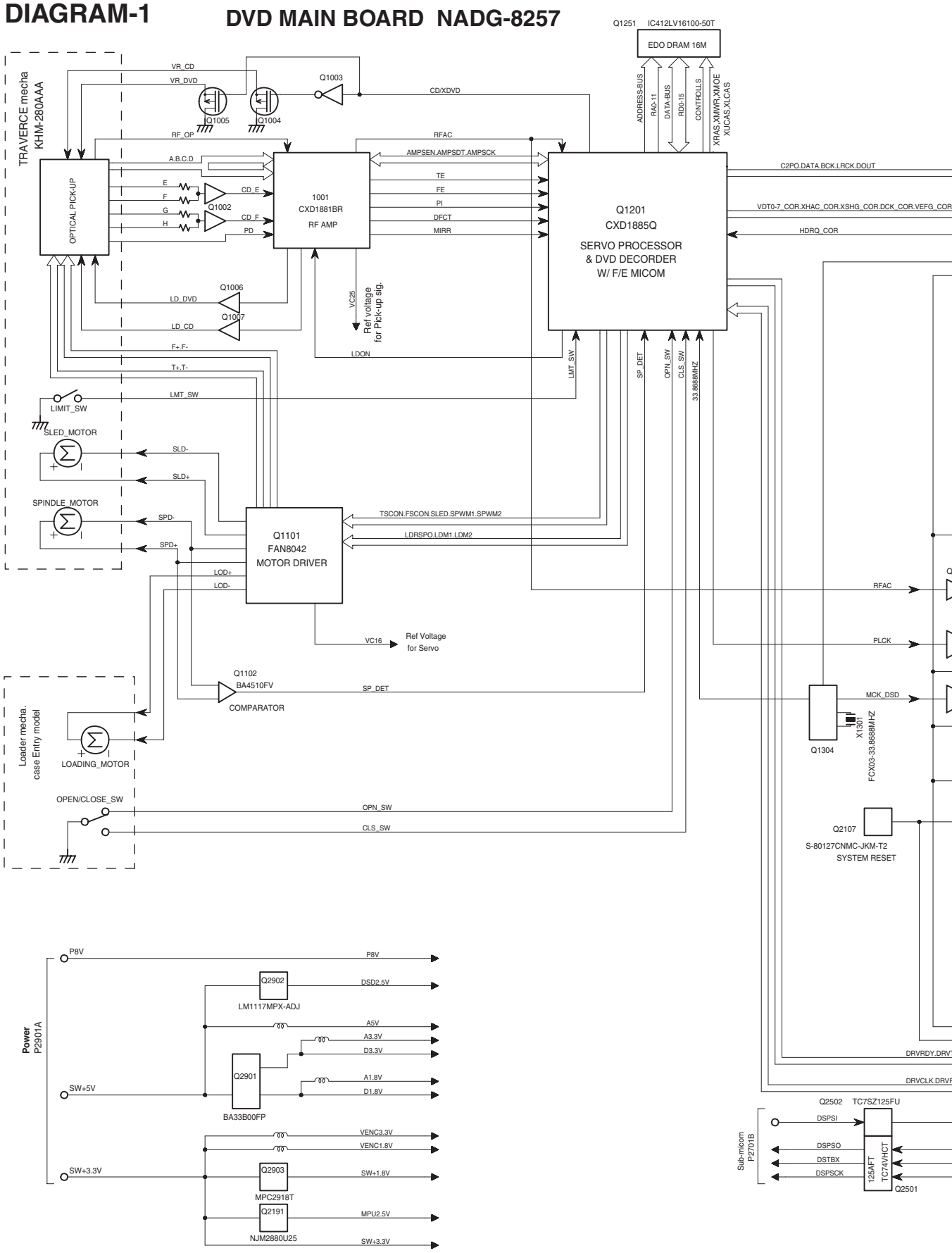

E F G H

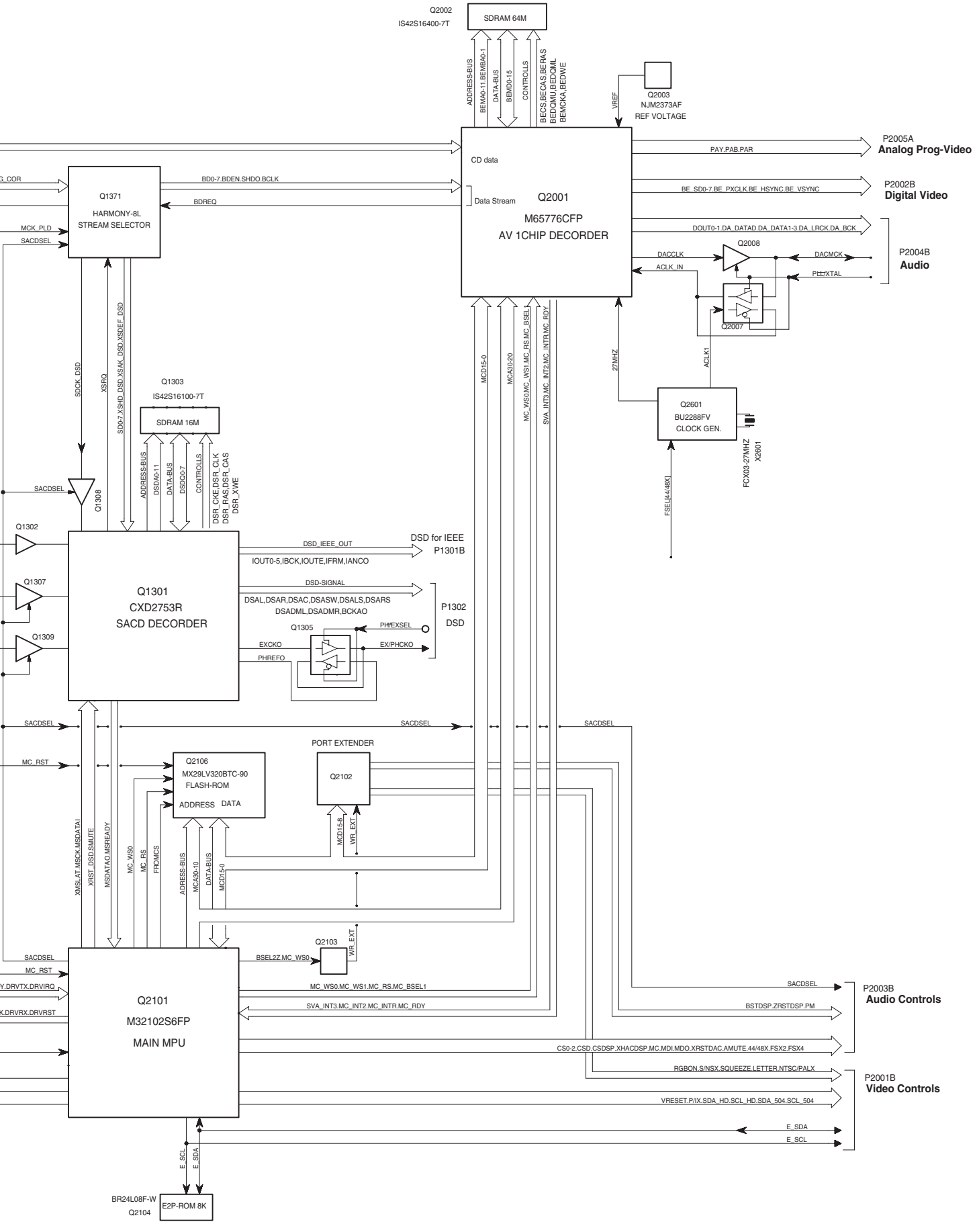
Q2002
IS42S16400-7T
SDRAM 64M
ADDRESS-BUS
BEMA0-11,BEMBA0-1
DATA-BUS
BEMD0-15
CONTROLLS
BECS,BECAS,BERAS
BEDQMU,BEDQML
BEMCKA,BEDWE
VREF
Q2003
NJM2373AF
REF VOLTAGE
CD data
Data Stream
Q2001
M65776CFP
AV 1CHIP DECORDER
P2005A
Analog Prog-Video
PAY.PAB.PAR
P2002B
Digital Video
BE_SD0-7.BE_PXCLK.BE_HSYNC.BE_VSYNC
DOUT0-1.DA_DATAD.DA_DATA1-3.DA_LRCK.DA_BCK
P2004B
Audio
DACCLK
ACLK_IN
DACMCK
PLL/XTAL
Q2008
Q2007
Q1371
HARMONY-8L
STREAM SELECTOR
BD0-7.BDEN.SHDO.BCLK
BDREQ
MCK_PLD
SACDSEL
SDCK_DSD
XSRQ
SDO-7.XSHD_DSD.XSAK_DSD.XSDEF_DSD
Q1303
IS42S16100-7T
SDRAM 16M
ADDRESS-BUS
DSDA0-11
DATA-BUS
DSDQ0-7
CONTROLLS
DSR_CKE,DSR_CLK
DSR_RAS,DSR_CAS
DSR_XWE
Q1308
MCD15-0
MCA30-20
MC_WS0,MC_WS1,MC_RS,MC_BSEL1
SVA_INT3,MC_INT2,MC_INTR,MC_RDY
27MHZ
ACLK1
Q2601
BU2288FV
CLOCK GEN.
FCX03-27MHZ
X2601
FSEL[44/48X]
Q1302
Q1307
Q1309
Q1301
CXD2753R
SACD DECORDER
DSD_IEEE_OUT
IOUT0-5,IBCK,IOUTE,IFRM,IANCO
DSD for IEEE
P1301B
DSD-SIGNAL
DSAL,DSAR,DSAC,DSASW,DSALS,DSARS
DSADML,DSADMR,BCKAO
P1302
DSD
Q1305
PH/EXSEL
EX/PHCKO
EXCKO
PHREFO
SACDSEL
MC_RST
PORT EXTENDER
Q2106
MX29LV320BTC-90
FLASH-ROM
ADDRESS DATA
Q2102
MCD15-8
WR_EXT
XMSLAT,MSCK,MSDATA1
XRST_DSD,SMUTE
MSDATA0,MSREADY
MC_WS0
MC_RS
FROMCS
ADRESS-BUS
MCA30-10
DATA-BUS
MCD15-0
Q2103
BSEL2Z.MC_WS0
Q2101
M32102S6FP
MAIN MPU
MC_WS0.MC_WS1.MC_RS.MC_BSEL1
SVA_INT3.MC_INT2.MC_INTR.MC_RDY
P2003B
Audio Controls
BSTDSP.ZRSTDSP.PM
CS0-2.CSD.CSDSP.XHACDSP.MC.MDI.MDO.XRSTDAC.AMUTE.44/48X.FSX2.FSX4
RGBON.S/NSX.SQUEEZE.LETTER.NTSC/PALX
P2001B
Video Controls
VRESET.P/IX.SDA_HD.SCL_HD.SDA_504.SCL_504
E_SDA
E_SCL
BR24L08F-W
Q2104
E2P-ROM 8K

BLOCK DIAGRAM-2

VIDEO SECTION-1

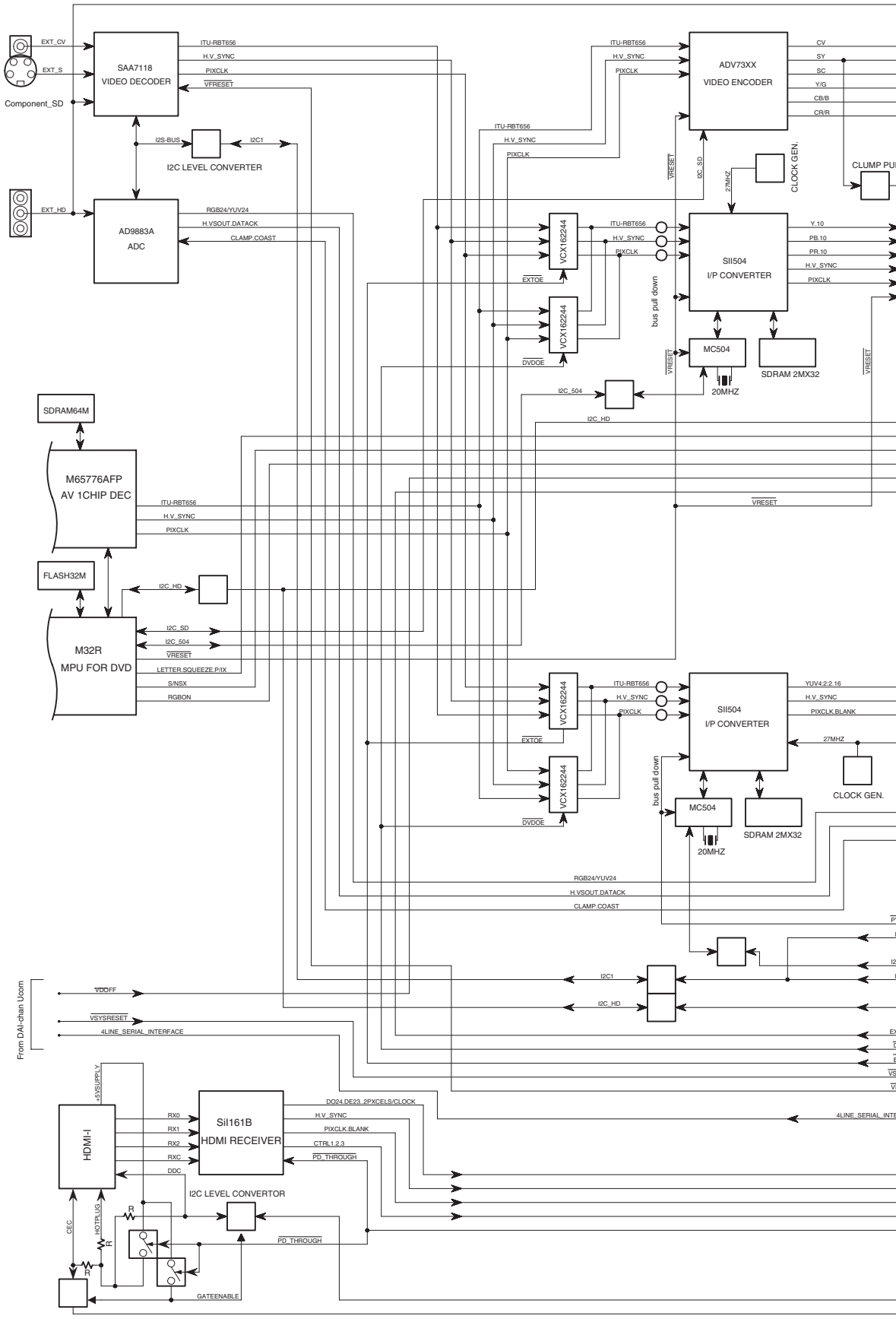

E F G H

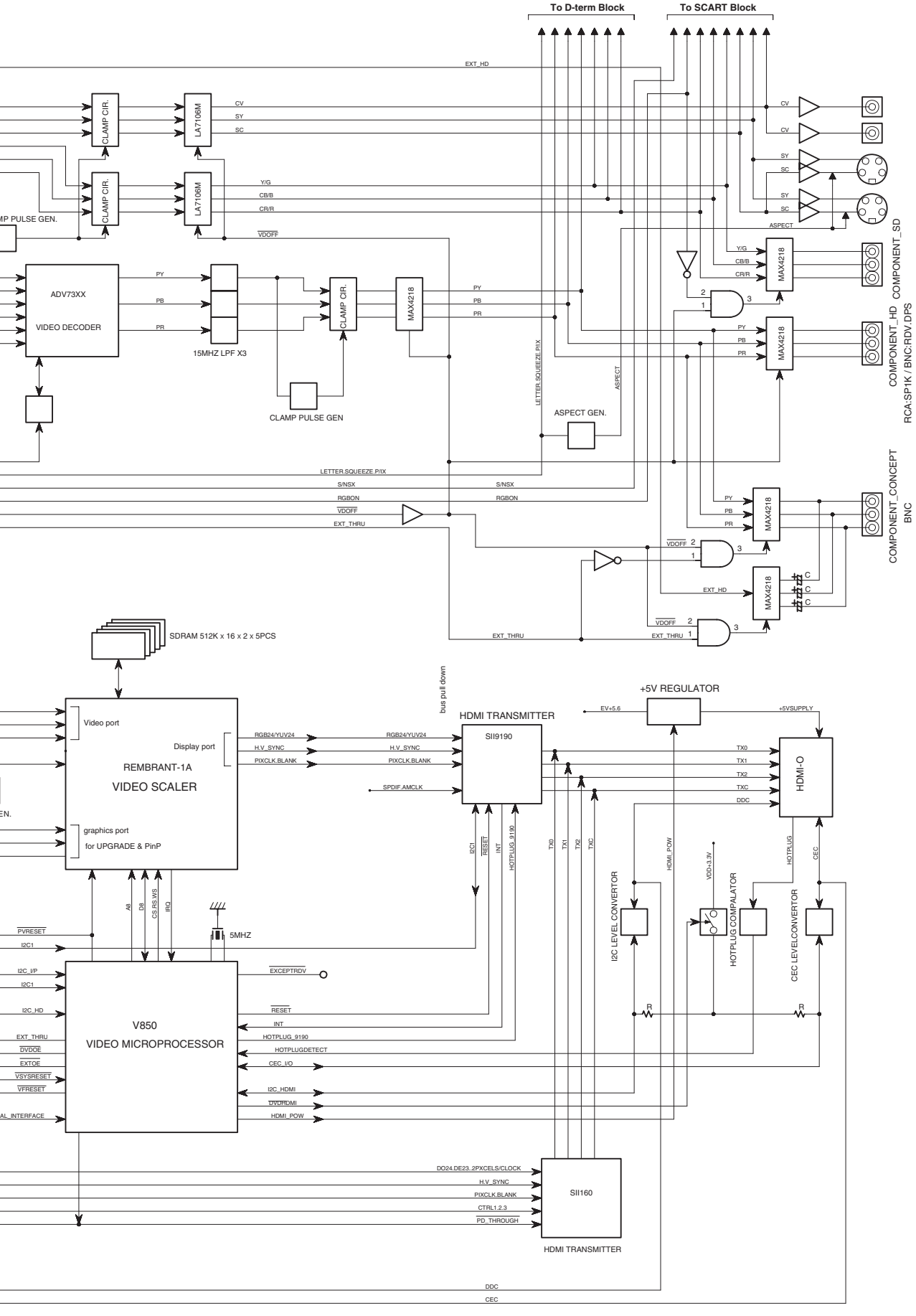
To D-term Block
To SCART Block
EXT_HD
CLAMP CIR.
LA7106M
CV
SY
SC
Y/G
CB/B
CR/R
VDOFF
ADV73XX
VIDEO DECODER
PY
PB
PR
15MHZ LPF X3
CLAMP PULSE GEN
MAX4218
ASPECT GEN.
LETTER.SQUEEZE.P/IX
ASPECT
COMPONENT_SD
COMPONENT_HD
RCA:SP1K / BNC:RDV.DPS
COMPONENT_CONCEPT
BNC
S/NSX
RGBON
EXT_THRU
SDRAM 512K x 16 x 2 x 5PCS
REMBRANT-1A
VIDEO SCALER
Video port
Display port
graphics port
for UPGRADE & PinP
RGB24/YUV24
H.V_SYNC
PIXCLK.BLANK
SPDIF.AMCLK
bus pull down
HDMI TRANSMITTER
SII9190
+5V REGULATOR
EV+5.6
+5VSUPPLY
TX0
TX1
TX2
TXC
DDC
HDMI-O
I2C1
RESET
INT
HOTPLUG_9190
HDMI_POW
VDD+3.3V
HOTPLUG
CEC
I2C LEVEL CONVERTOR
HOTPLUG COMPALATOR
CEC LEVELCONVERTOR
R
A8
D8
CS.RS.WS
IRQ
PVRESET
5MHZ
I2C_I/P
EXCEPTRDV
I2C_HD
V850
VIDEO MICROPROCESSOR
DVDOE
EXTOE
VSYSRESET
VFRESET
HOTPLUGDETECT
CEC_I/O
I2C_HDMI
DVDRDMI
DO24.DE23..2PXCELS/CLOCK
CTRL1.2.3
PD_THROUGH
SII160
HDMI TRANSMITTER

BLOCK DIAGRAM-3

VIDEO SECTION-2

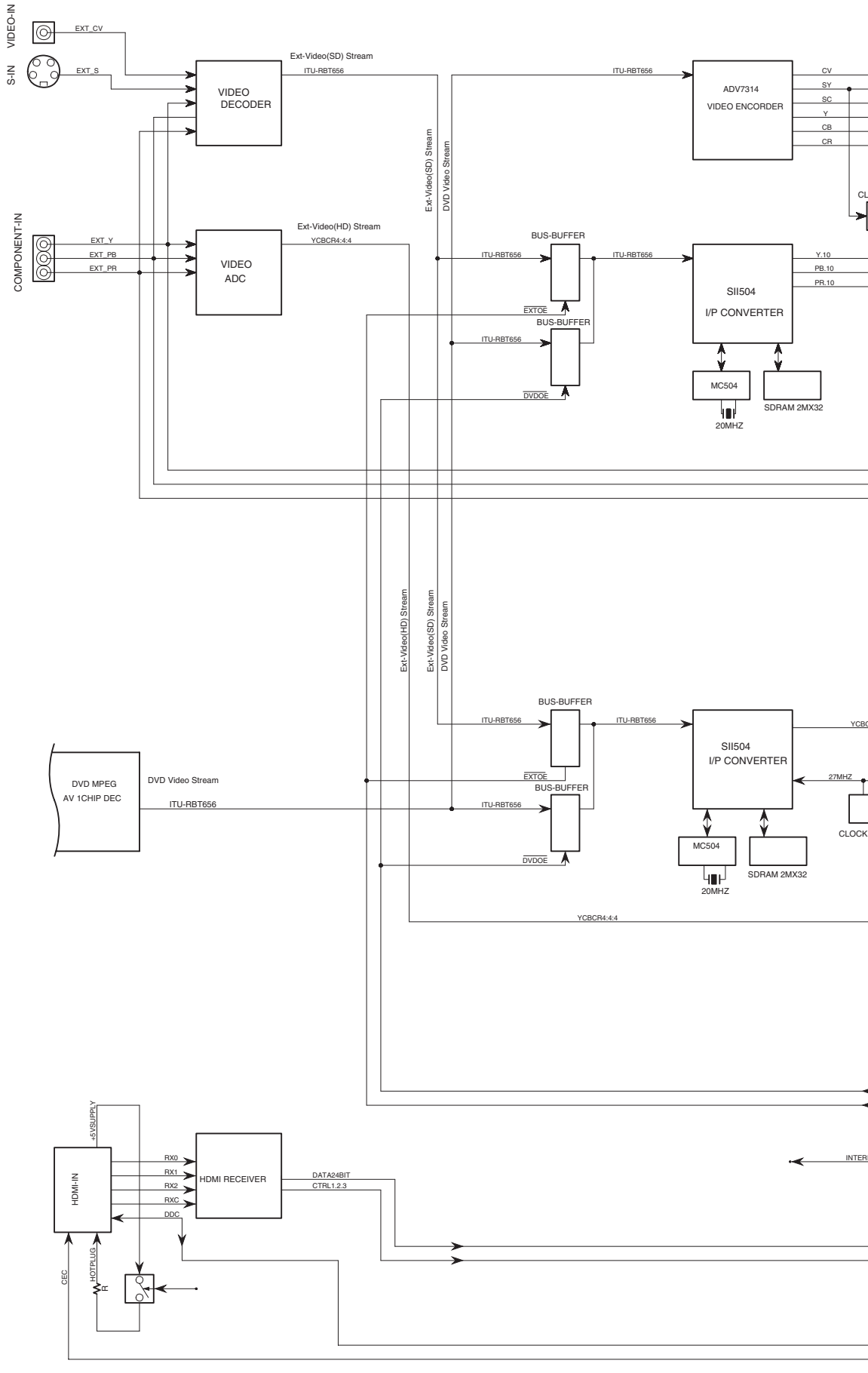

E F G H

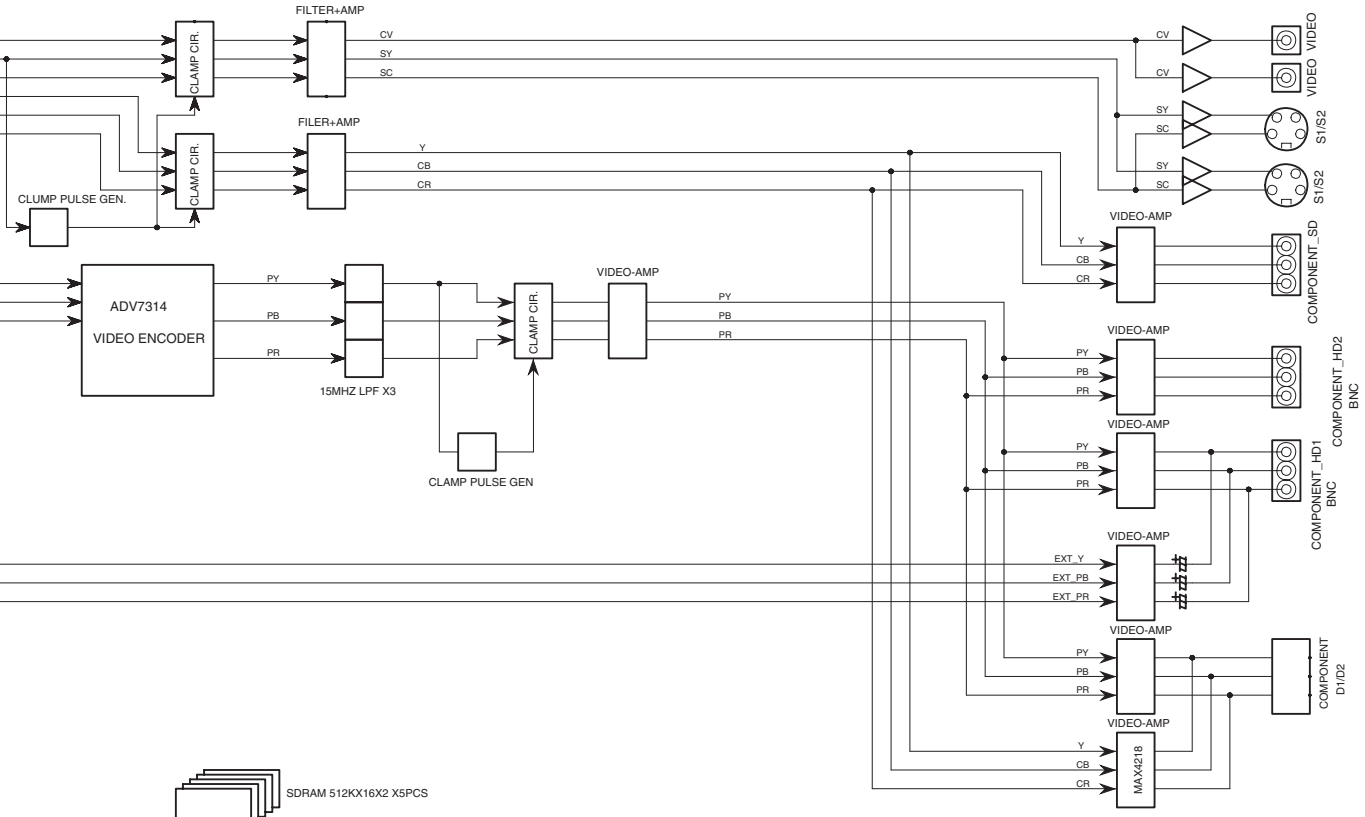
FILTER+AMP
CLAMP CIR.
CV
SY
SC
FILER+AMP
Y
CB
CR
CLUMP PULSE GEN.
ADV7314
VIDEO ENCODER
PY
PB
PR
15MHZ LPF X3
CLAMP PULSE GEN
VIDEO-AMP
VIDEO VIDEO
S1/S2
S1/S2
COMPONENT_SD
COMPONENT_HD2
BNC
COMPONENT_HD1
BNC
EXT_Y
EXT_PB
EXT_PR
COMPONENT
D1/D2
MAX4218

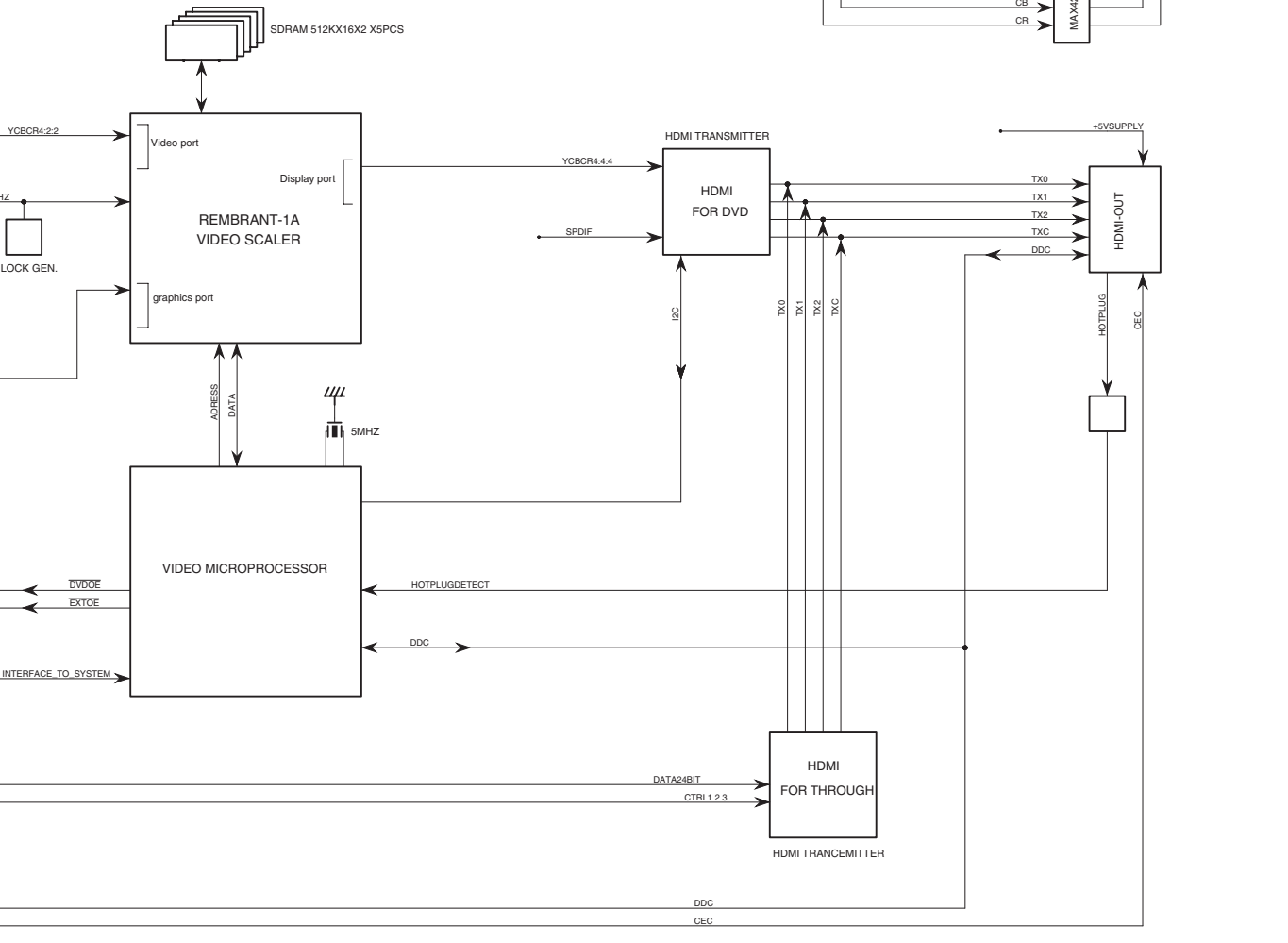
SDRAM 512KX16X2 X5PCS
YCBCR4:2:2
Video port
Display port
REMBRANT-1A
VIDEO SCALER
graphics port
LOCK GEN.
ADRESS
DATA
5MHZ
VIDEO MICROPROCESSOR
DVDOE
EXTOE
INTERFACE_TO_SYSTEM
HDMI TRANSMITTER
YCBCR4:4:4
SPDIF
HDMI
FOR DVD
I2C
TX0
TX1
TX2
TXC
DDC
+5VSUPPLY
HDMI-OUT
HOTPLUG
CEC
HOTPLUGDETECT
DDC
HDMI
FOR THROUGH
DATA24BIT
CTRL1.2.3
HDMI TRANCEMITTER
DDC
CEC

BLOCK DIAGRAM-4

AUDIO SECTION-1

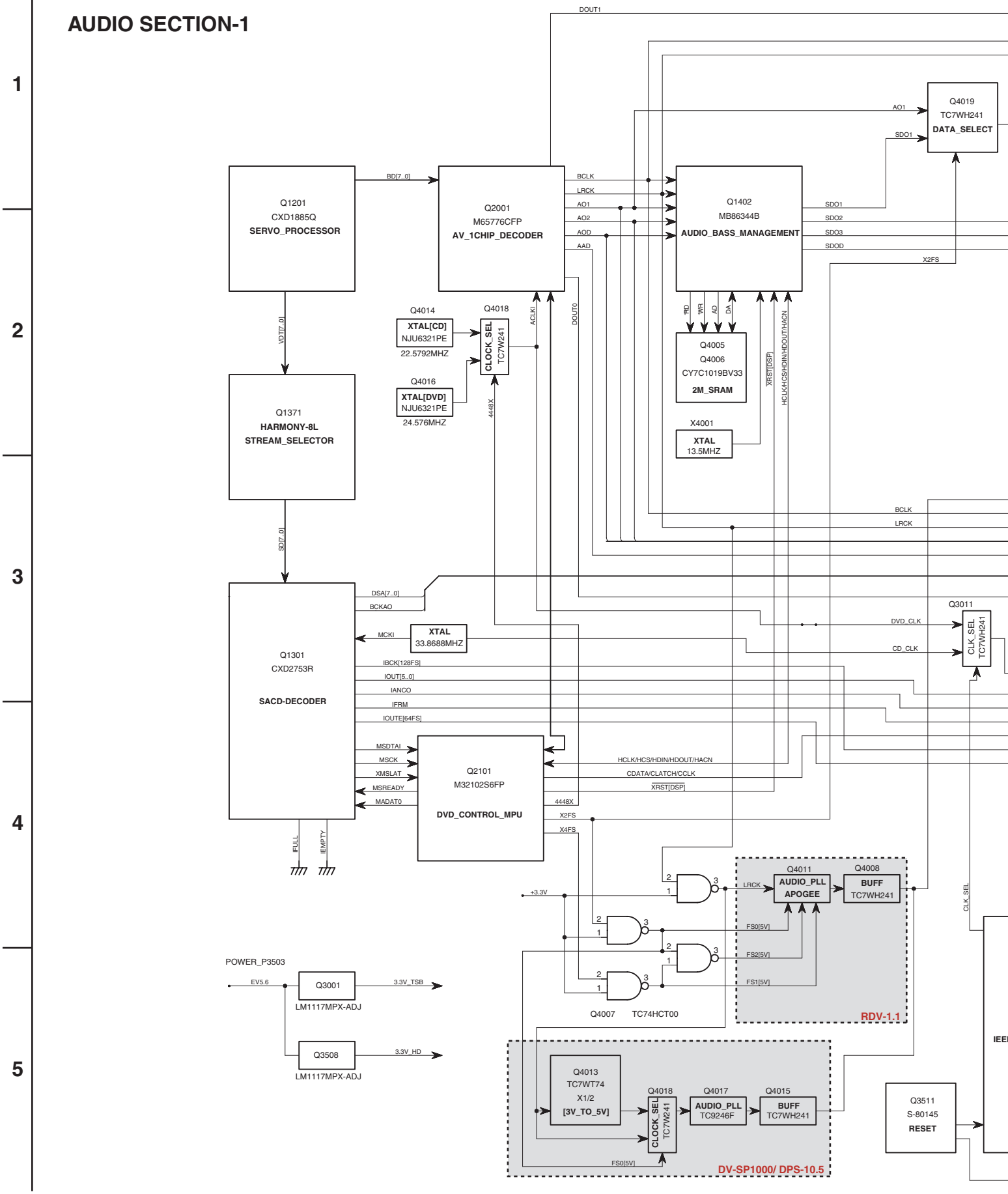

E F G H

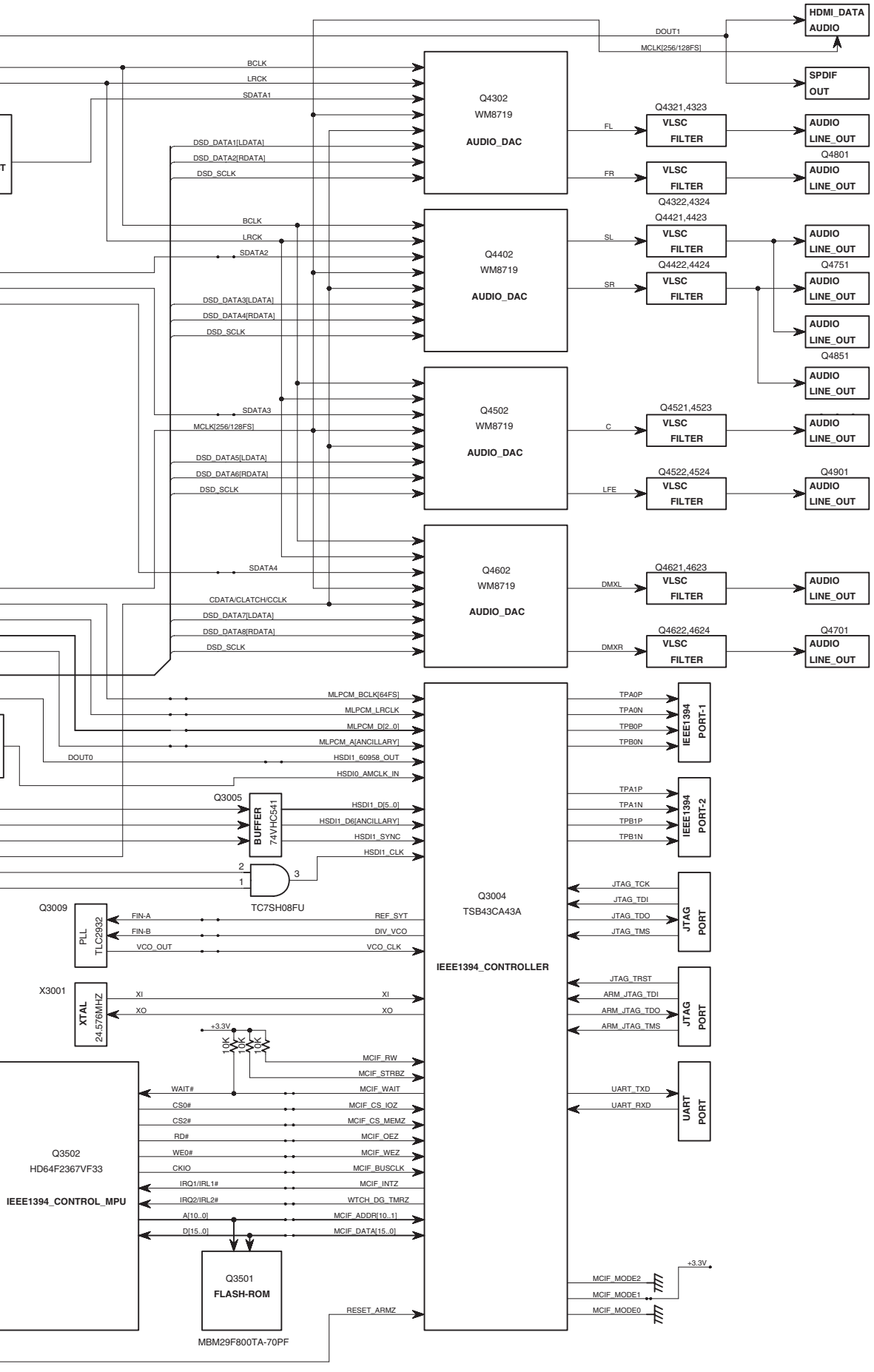
HDMI_DATA AUDIO
DOUT1
MCLK[256/128FS]
SPDIF OUT
BCLK
LRCK
SDATA1
DSD_DATA1[LDATA]
DSD_DATA2[RDATA]
DSD_SCLK
Q4302
WM8719
AUDIO_DAC
FL
FR
Q4321,4323
Q4322,4324
VLSC FILTER
AUDIO LINE_OUT
Q4801
SDATA2
DSD_DATA3[LDATA]
DSD_DATA4[RDATA]
Q4402
Q4421,4423
Q4422,4424
SL
SR
Q4751
Q4851
SDATA3
Q4502
C
LFE
Q4521,4523
Q4522,4524
Q4901
SDATA4
CDATA/CLATCH/CCLK
DSD_DATA7[LDATA]
DSD_DATA8[RDATA]
Q4602
DMXL
DMXR
Q4621,4623
Q4622,4624
Q4701
MLPCM_BCLK[64FS]
MLPCM_LRCLK
MLPCM_D[2..0]
MLPCM_A[ANCILLARY]
HSDI1_60958_OUT
HSDI0_AMCLK_IN
DOUT0
Q3005
BUFFER 74VHC541
HSDI1_D[5..0]
HSDI1_D6[ANCILLARY]
HSDI1_SYNC
HSDI1_CLK
TC7SH08FU
Q3004
TSB43CA43A
IEEE1394_CONTROLLER
TPA0P
TPA0N
TPB0P
TPB0N
IEEE1394 PORT-1
TPA1P
TPA1N
TPB1P
TPB1N
IEEE1394 PORT-2
JTAG_TCK
JTAG_TDI
JTAG_TDO
JTAG_TMS
JTAG PORT
JTAG_TRST
ARM_JTAG_TDI
ARM_JTAG_TDO
ARM_JTAG_TMS
Q3009
PLL TLC2932
FIN-A
FIN-B
VCO_OUT
REF_SYT
DIV_VCO
VCO_CLK
X3001
XTAL 24.576MHZ
XI
XO
+3.3V
10K
MCIF_RW
MCIF_STRBZ
MCIF_WAIT
MCIF_CS_IOZ
MCIF_CS_MEMZ
MCIF_OEZ
MCIF_WEZ
MCIF_BUSCLK
MCIF_INTZ
WTCH_DG_TMRZ
MCIF_ADDR[10..1]
MCIF_DATA[15..0]
UART_TXD
UART_RXD
UART PORT
WAIT#
CS0#
CS2#
RD#
WE0#
CKIO
IRQ1/IRL1#
IRQ2/IRL2#
A[10..0]
D[15..0]
Q3502
HD64F2367VF33
IEEE1394_CONTROL_MPU
Q3501
FLASH-ROM
MBM29F800TA-70PF
RESET_ARMZ
MCIF_MODE2
MCIF_MODE1
MCIF_MODE0

BLOCK DIAGRAM-5

AUDIO SECTION-2

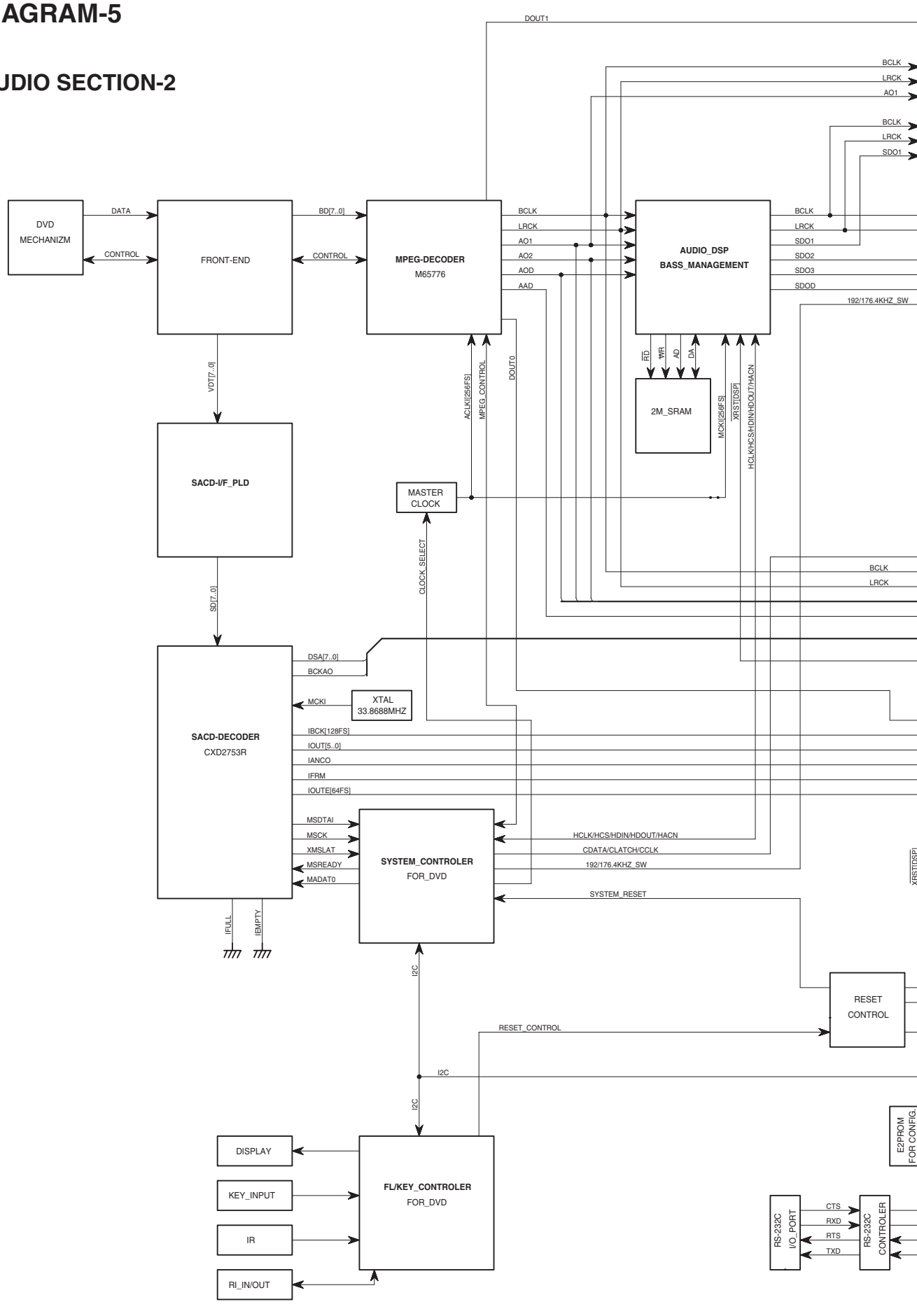

E F G H

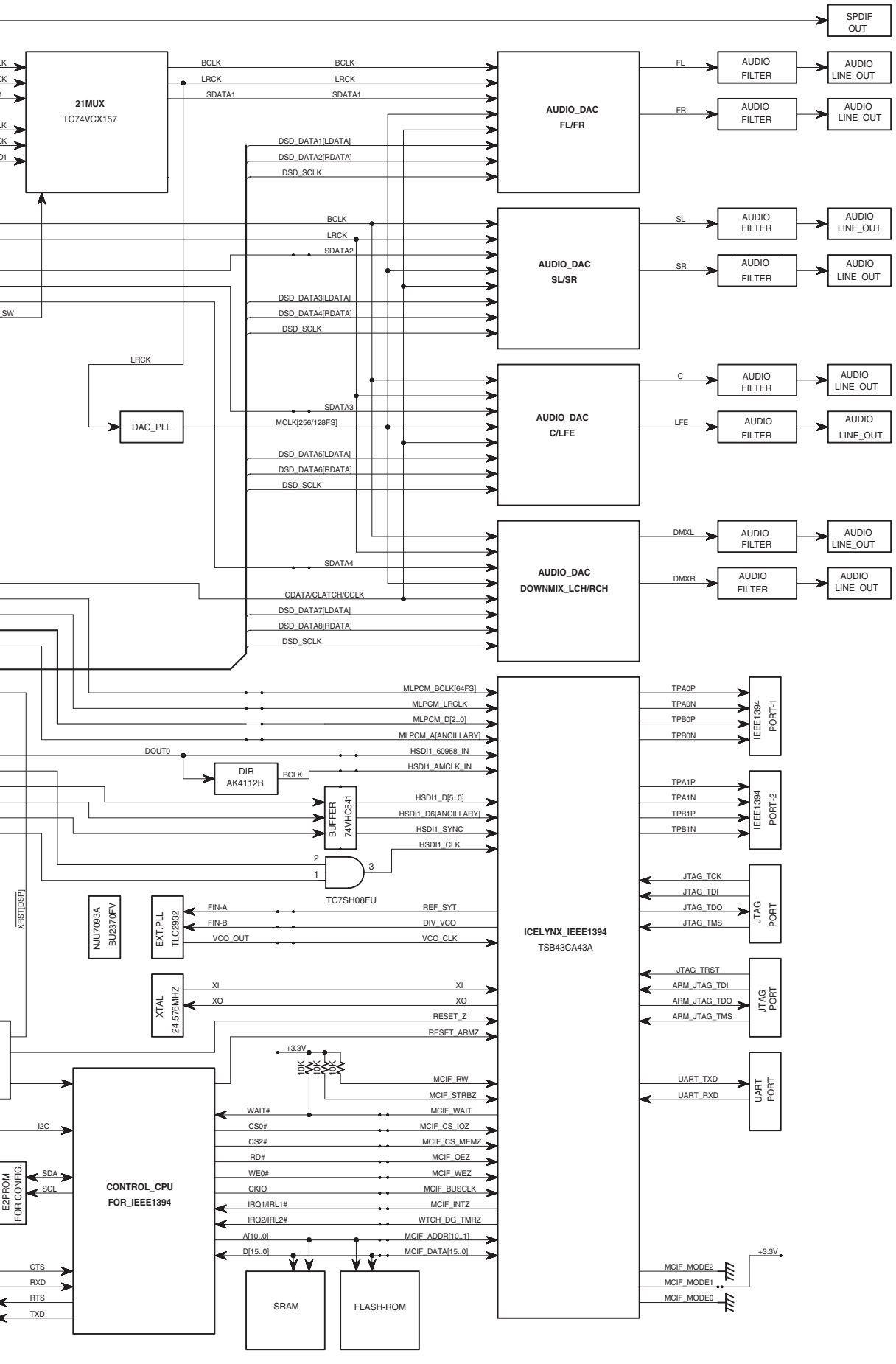
SPDIF OUT
21MUX
TC74VCX157
BCLK
LRCK
SDATA1
DSD_DATA1[LDATA]
DSD_DATA2[RDATA]
DSD_SCLK
AUDIO_DAC FL/FR
FL
FR
AUDIO FILTER
AUDIO LINE_OUT
SDATA2
AUDIO_DAC SL/SR
SL
SR
DSD_DATA3[LDATA]
DSD_DATA4[RDATA]
LRCK
DAC_PLL
MCLK[256/128FS]
SDATA3
AUDIO_DAC C/LFE
C
LFE
DSD_DATA5[LDATA]
DSD_DATA6[RDATA]
SDATA4
AUDIO_DAC DOWNMIX_LCH/RCH
DMXL
DMXR
CDATA/CLATCH/CCLK
DSD_DATA7[LDATA]
DSD_DATA8[RDATA]
MLPCM_BCLK[64FS]
MLPCM_LRCLK
MLPCM_D[2..0]
MLPCM_A[ANCILLARY]
DOUT0
DIR AK4112B
HSDI1_60958_IN
HSDI1_AMCLK_IN
BUFFER 74VHC541
HSDI1_D[5..0]
HSDI1_D6[ANCILLARY]
HSDI1_SYNC
HSDI1_CLK
TC7SH08FU
NJU7093A BU2370FV
EXT.PLL TLC2932
FIN-A
FIN-B
VCO_OUT
REF_SYT
DIV_VCO
VCO_CLK
ICELYNX_IEEE1394
TSB43CA43A
XTAL 24.576MHZ
XI
XO
RESET_Z
RESET_ARMZ
+3.3V
10K
MCIF_RW
MCIF_STRBZ
WAIT#
MCIF_WAIT
CS0#
MCIF_CS_IOZ
CS2#
MCIF_CS_MEMZ
RD#
MCIF_OEZ
WE0#
MCIF_WEZ
CKIO
MCIF_BUSCLK
IRQ1/IRL1#
MCIF_INTZ
IRQ2/IRL2#
WTCH_DG_TMRZ
A[10..0]
MCIF_ADDR[10..1]
D[15..0]
MCIF_DATA[15..0]
CONTROL_CPU FOR_IEEE1394
I2C
SDA
SCL
E2PROM FOR CONFIG
CTS
RXD
RTS
TXD
SRAM
FLASH-ROM
TPA0P
TPA0N
TPB0P
TPB0N
IEEE1394 PORT-1
TPA1P
TPA1N
TPB1P
TPB1N
IEEE1394 PORT-2
JTAG_TCK
JTAG_TDI
JTAG_TDO
JTAG_TMS
JTAG PORT
JTAG_TRST
ARM_JTAG_TDI
ARM_JTAG_TDO
ARM_JTAG_TMS
JTAG PORT
UART_TXD
UART_RXD
UART PORT
MCIF_MODE2
MCIF_MODE1
MCIF_MODE0
+3.3V

BLOCK DIAGRAM-6

AUDIO SECTION-3

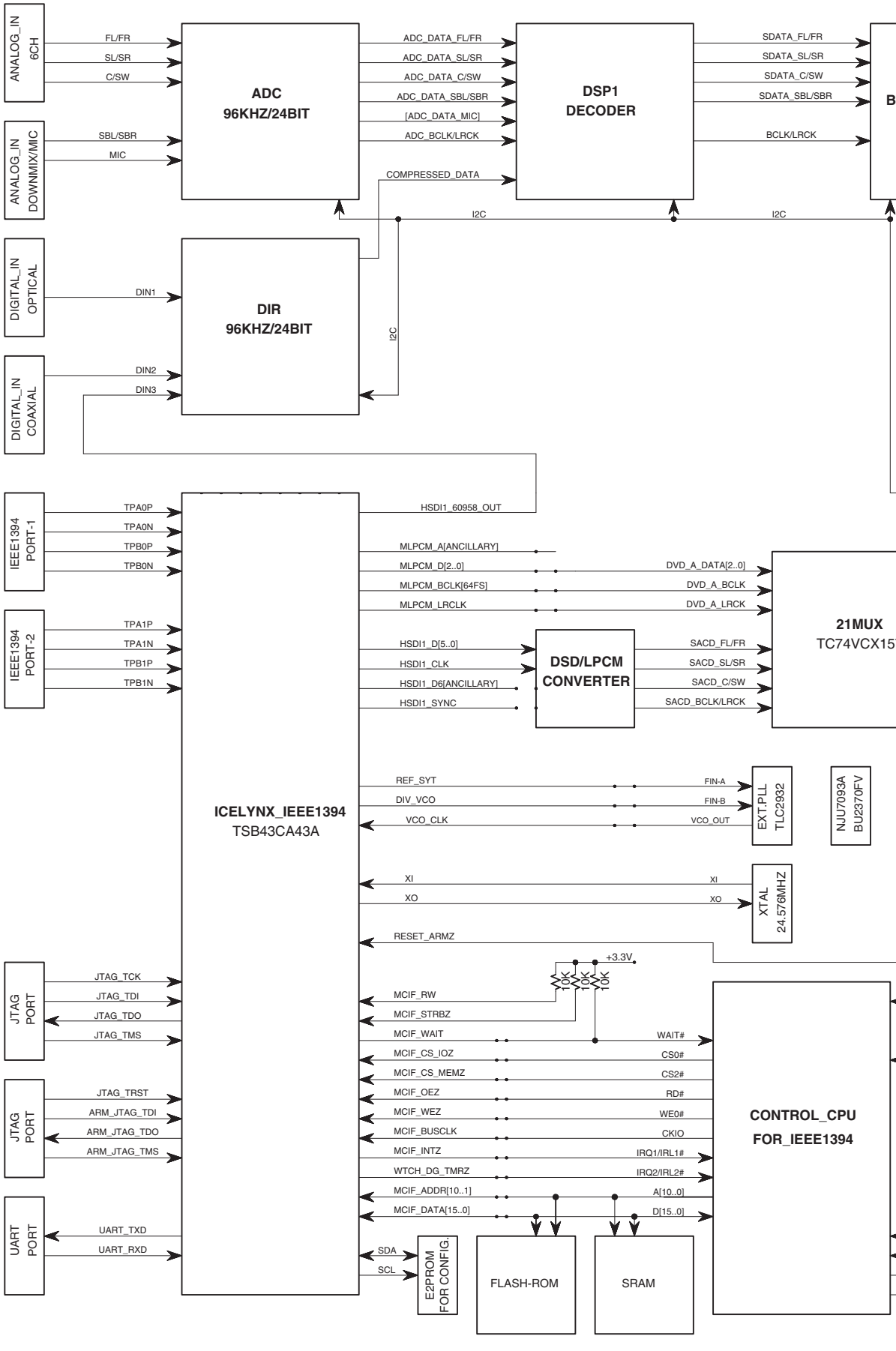

E F G H

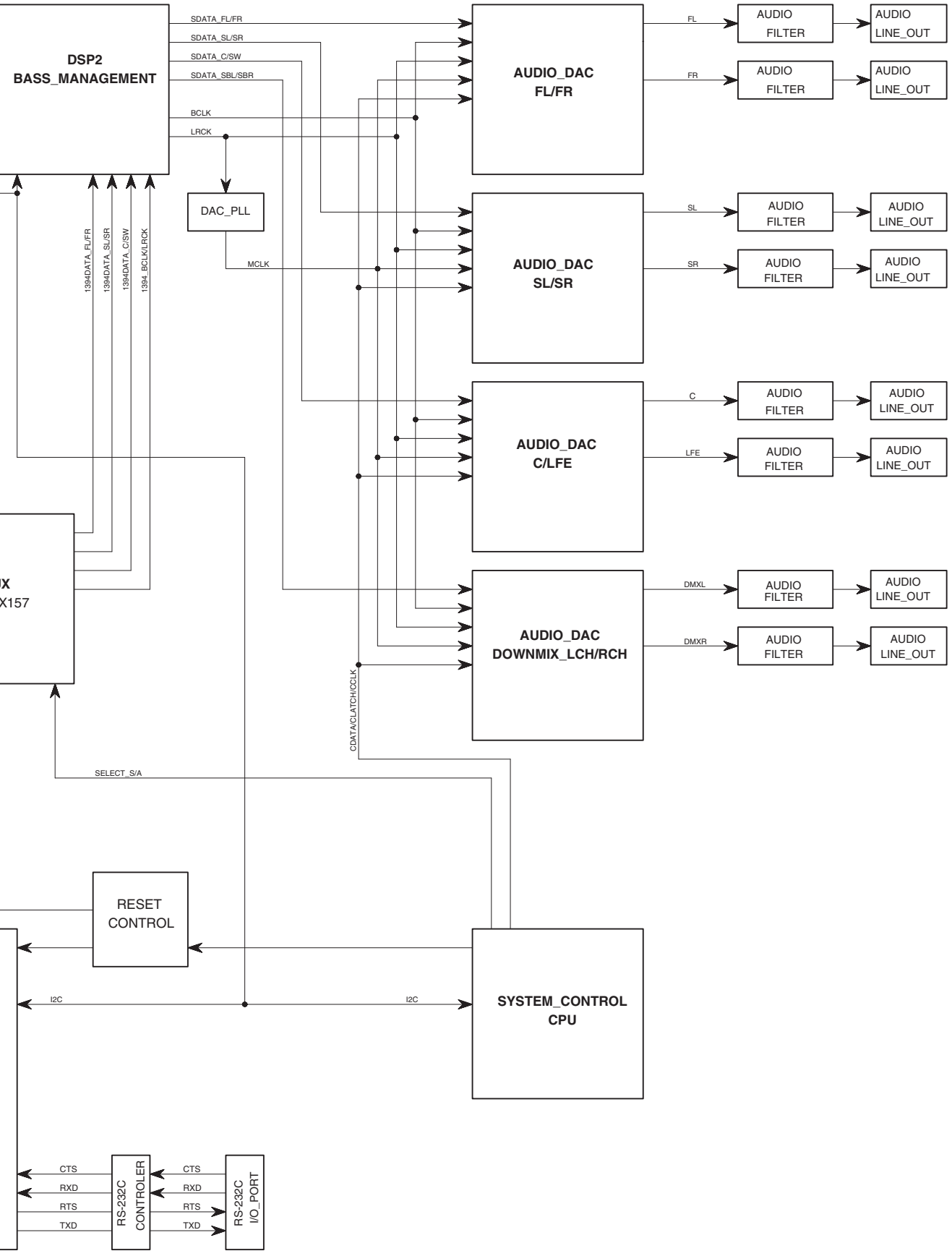
DSP2
BASS_MANAGEMENT
SDATA_FL/FR
SDATA_SL/SR
SDATA_C/SW
SDATA_SBL/SBR
BCLK
LRCK
DAC_PLL
MCLK
1394DATA_FL/FR
1394DATA_SL/SR
1394DATA_C/SW
1394_BCLK/LRCK
AUDIO_DAC
FL/FR
AUDIO_DAC
SL/SR
AUDIO_DAC
C/LFE
AUDIO_DAC
DOWNMIX_LCH/RCH
FL
FR
SL
SR
C
LFE
DMXL
DMXR
AUDIO
FILTER
AUDIO
LINE_OUT
CDATA/CLATCH/CCLK
SELECT_S/A
RESET
CONTROL
I2C
I2C
SYSTEM_CONTROL
CPU
CTS
RXD
RTS
TXD
RS-232C
CONTROLER
RS-232C
I/O_PORT

BLOCK DIAGRAM-7

HDMI

HDMI CONCEPT BLOCK DIAGRAM

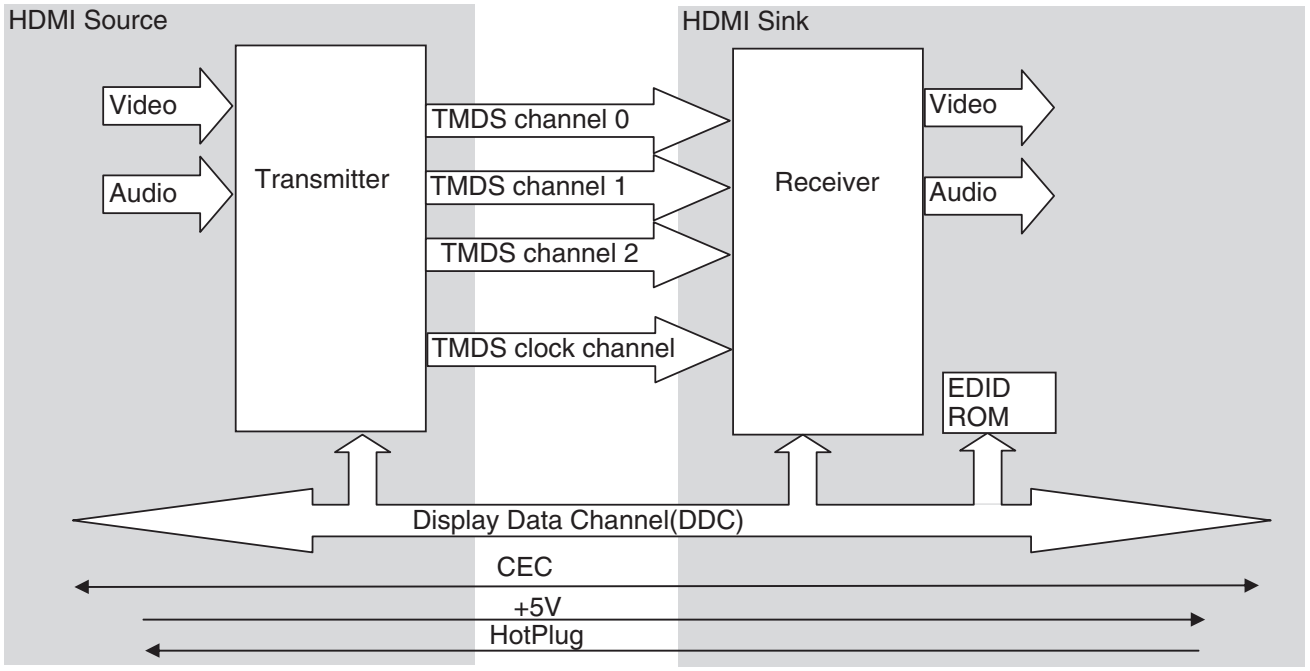

PIXEL ENCODING

RGB4:4:4

Pixcel 0	Pixcel 1	Pixcel 2	Pixcel 3	Pixcel 4	Pixcel 5
B0	B1	B2	B3	B4	B5
G0	G1	G2	G3	G4	G5
R0	R1	R2	R3	R4	R5

YCbCr4:4:4

Pixcel 0	Pixcel 1	Pixcel 2	Pixcel 3	Pixcel 4	Pixcel 5
Y0	Y1	Y2	Y3	Y4	Y5
Cr0	Cr1	Cr2	Cr3	Cr4	Cr5
Cb0	Cb1	Cb2	Cb3	Cb4	Cb5

YCbCr4:2:2

Pixcel 0	Pixcel 1	Pixcel 2	Pixcel 3	Pixcel 4	Pixcel 5
Y0	Y1	Y2	Y3	Y4	Y5
Cr0		Cr1		Cr2	
Cb0		Cb1		Cb2	

SCHEMATIC DIAGRAM 1/18

U03 : DVD MAIN CPU PC BOARD (1/2) NADG-8259

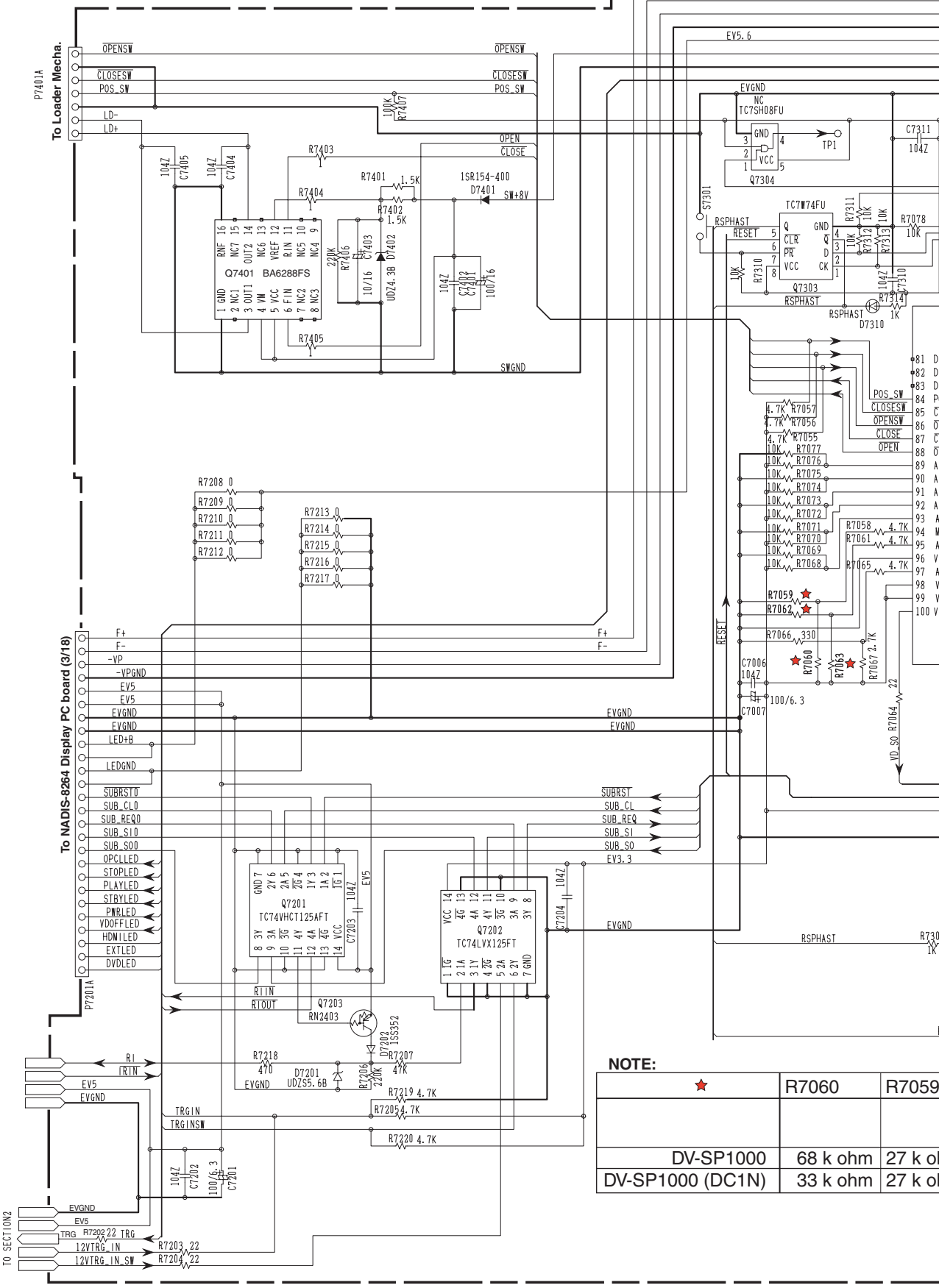

NOTE:

★	R7060	R7059
DV-SP1000	68 k ohm	27 k oh
DV-SP1000 (DC1N)	33 k ohm	27 k oh

E F G H

MAIN CPU SECTION

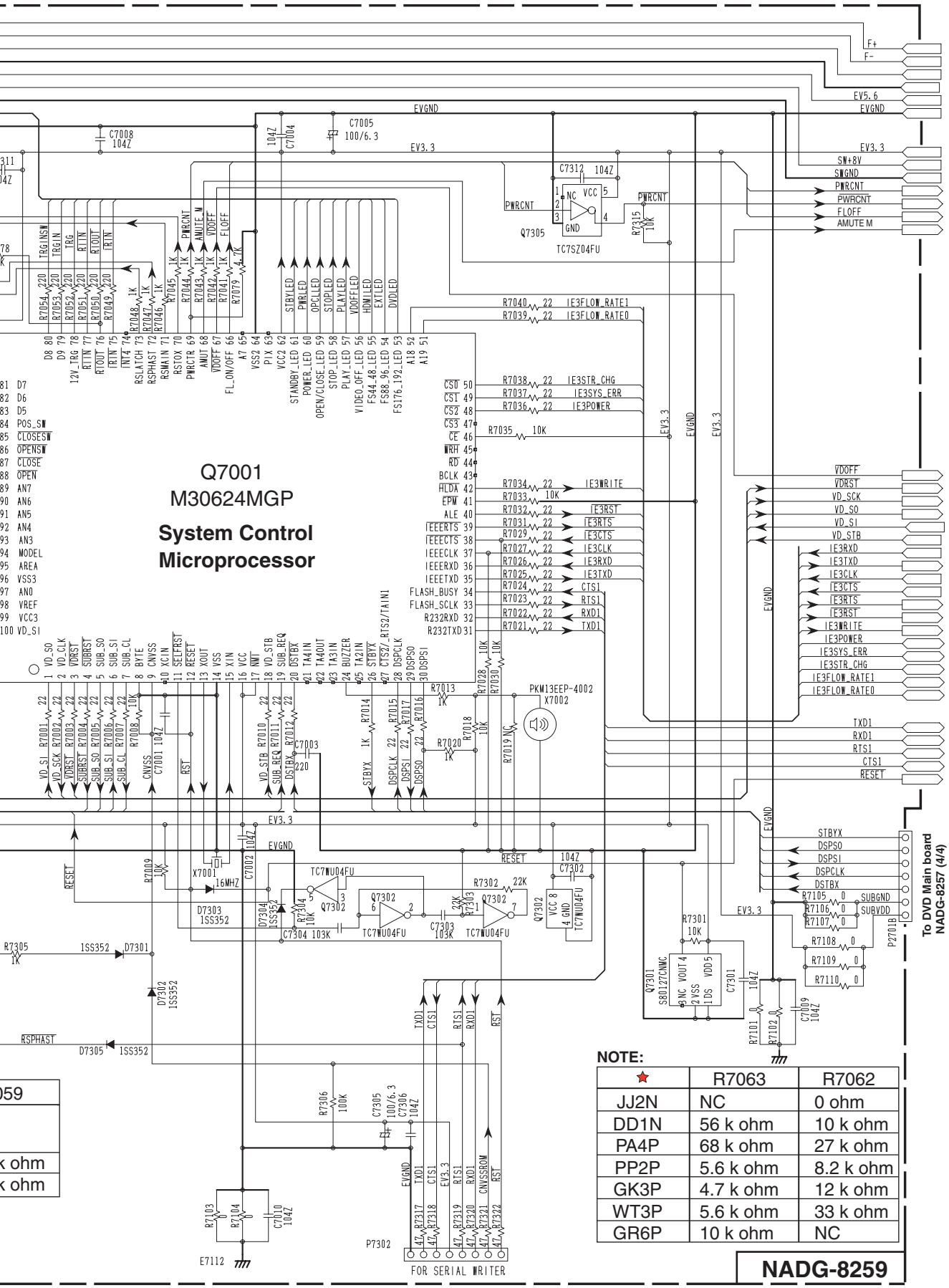

NOTE:

★	R7063	R7062
JJ2N	NC	0 ohm
DD1N	56 k ohm	10 k ohm
PA4P	68 k ohm	27 k ohm
PP2P	5.6 k ohm	8.2 k ohm
GK3P	4.7 k ohm	12 k ohm
WT3P	5.6 k ohm	33 k ohm
GR6P	10 k ohm	NC

NADG-8259

SCHEMATIC DIAGRAM 2/18

U03 : DVD MAIN CPU PC BOARD
NADG-8259 (2/2)

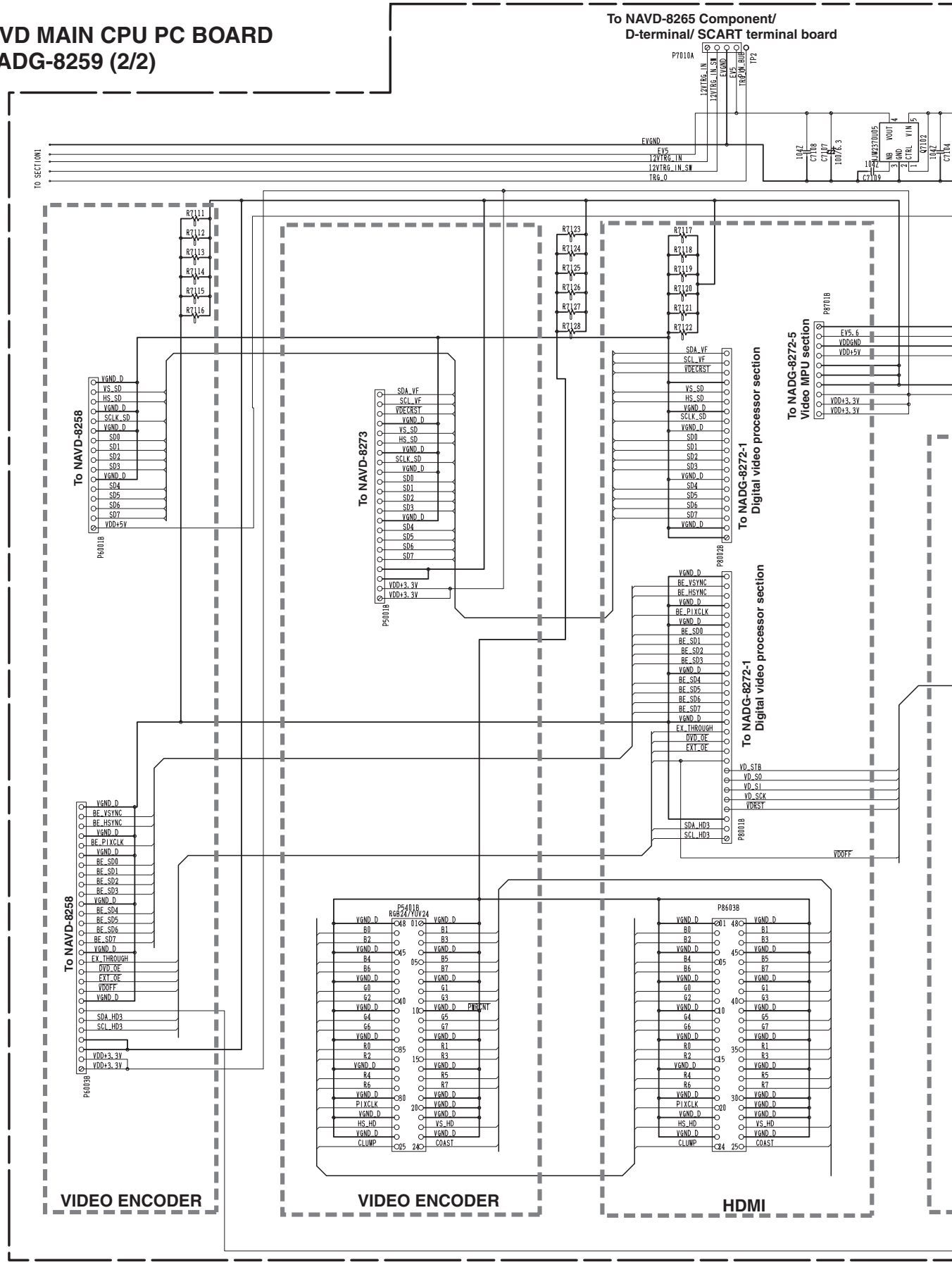

E F G H

MAIN CPU SECTION

NADG-8259

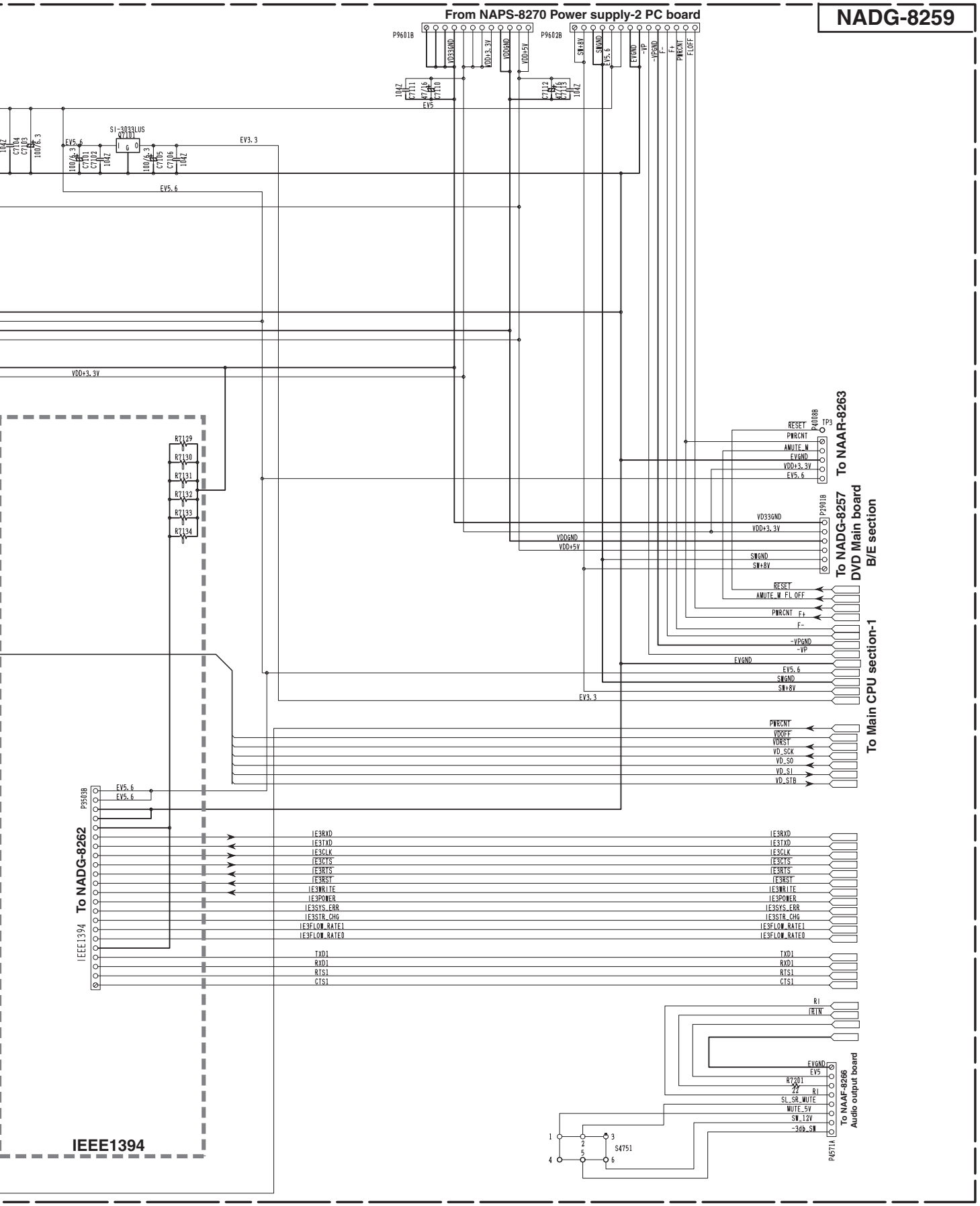

SCHEMATIC DIAGRAM 3/18

U07 : DISPLAY PC BOARD NADIS-8264

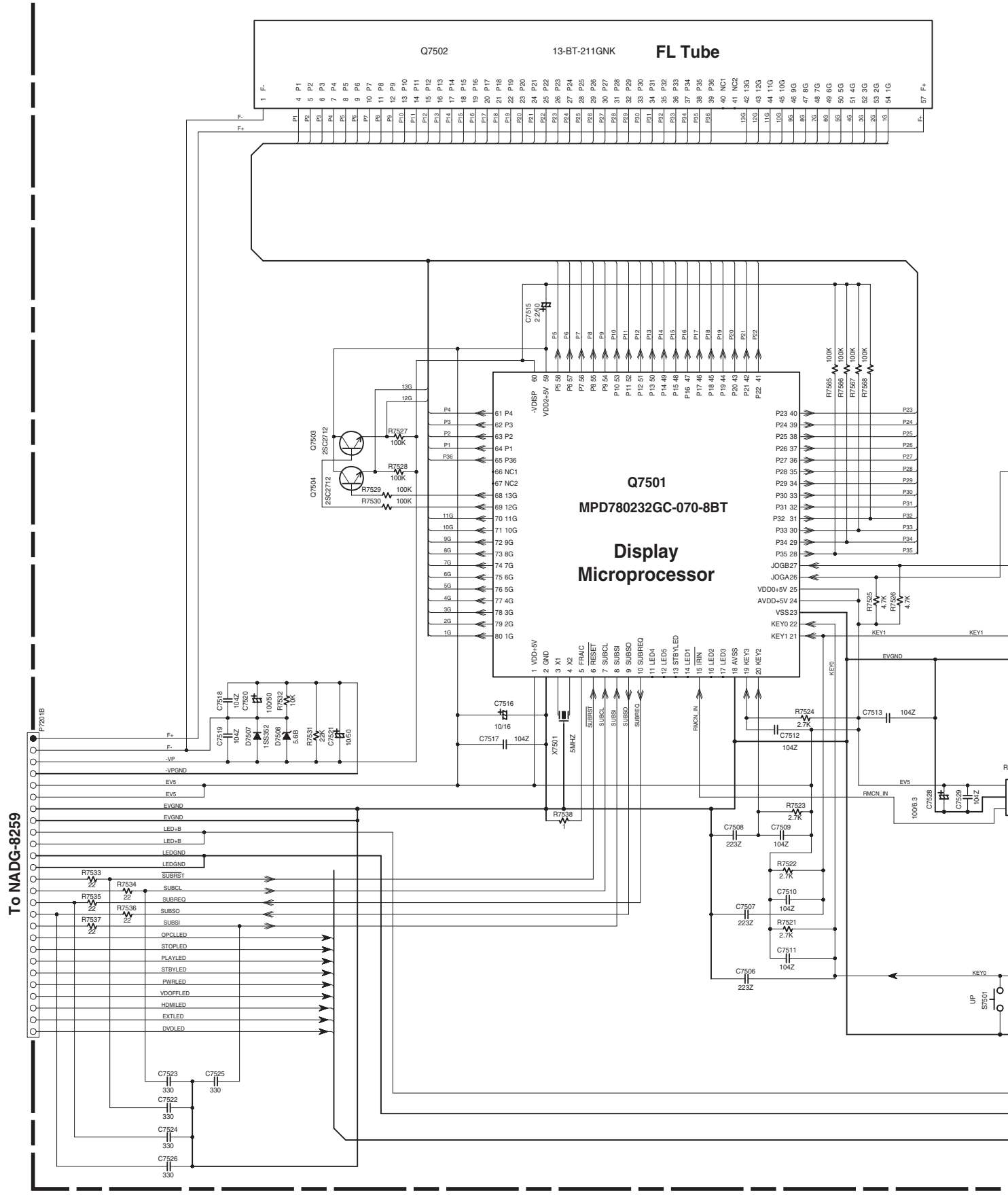

E F G H

G-8272

MEMORY SECTION

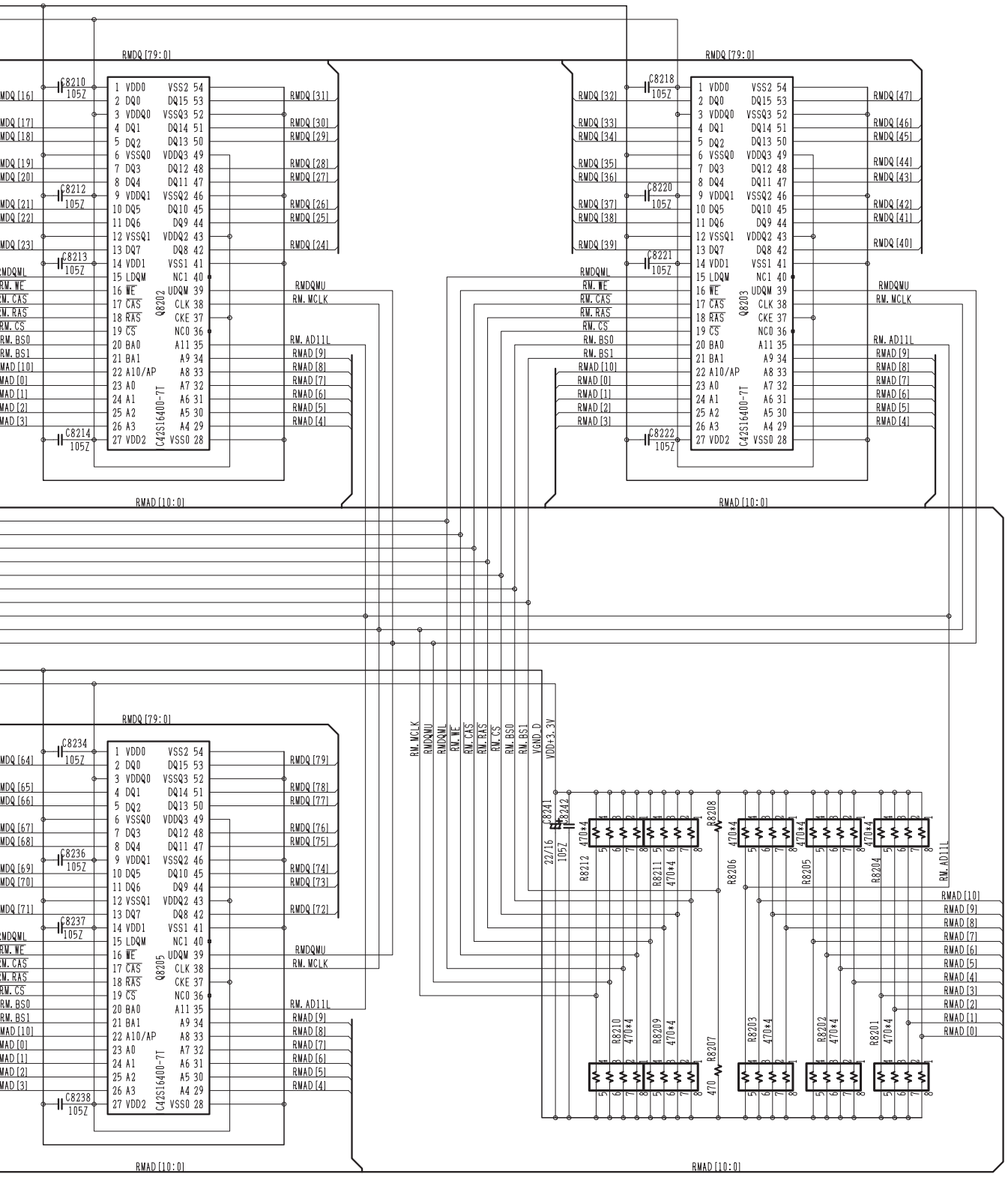

SCHEMATIC DIAGRAM 4/18

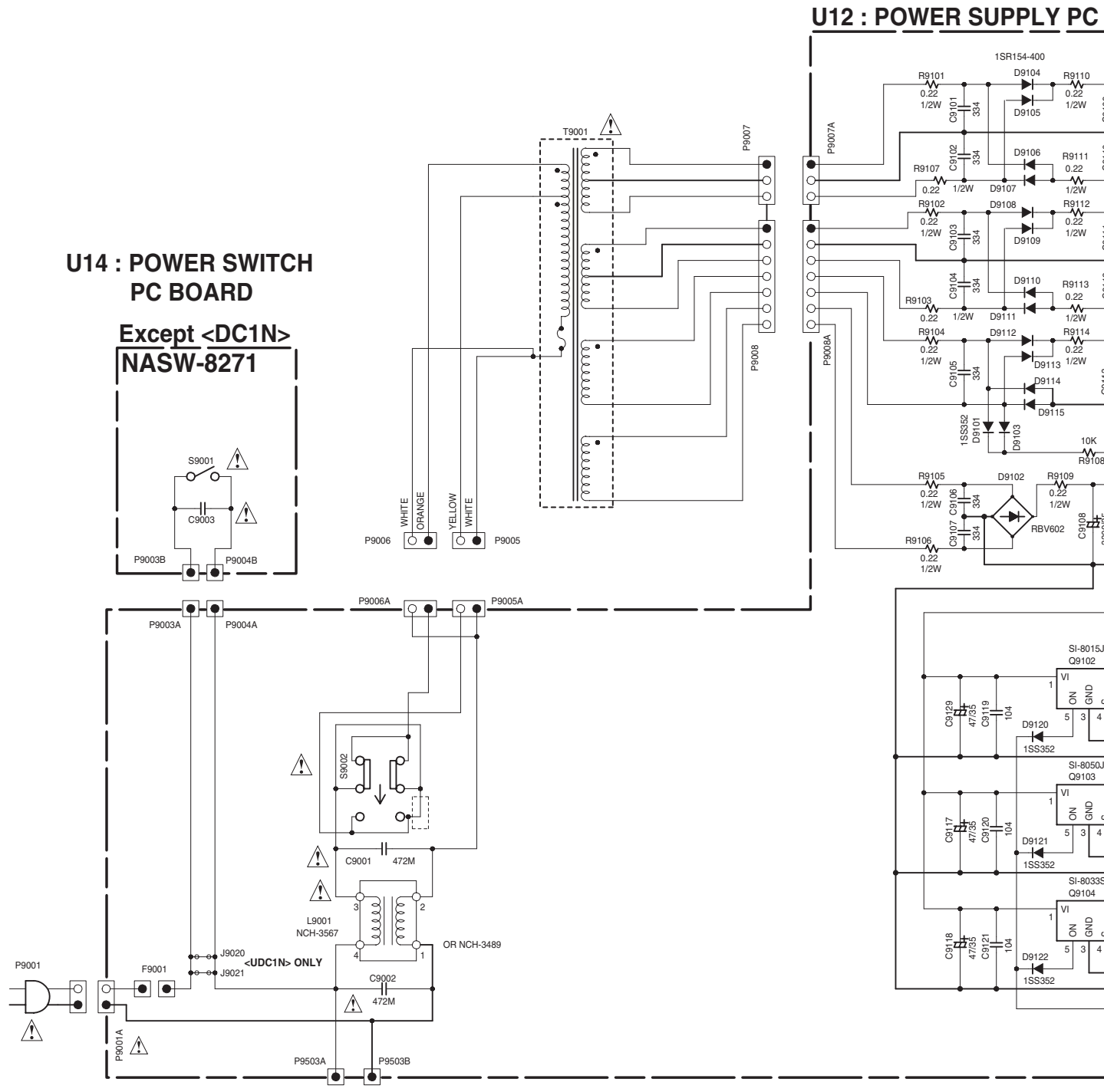

CAUTION

FOR CONTINUED PROTECTION AGAINST FIRE HAZARD,REPLACE ONLY WITH FUSE OF SAME TYPE AND RATING INDICATED.

ATTENTION

AFIN D'ASSURER UNE PROTECTION PERMANENTE CONTRE LES RISQUES D'INCENDIE, REMPLACER UNIQUEMENT PAR UN FUSIBLE DE MEME TYPE ET CALIBRATION COMME INDIQUE.

THIS SYMBOL LOCATED NEAR THE FUSE INDICATES THAT THE FUSE USED IS SLOW OPERATING TYPE FOR CONTINUED PROTECTION AGAINST FIRE HAZARD,REPLACE WITH SAME TYPE FUSE. FOR FUSE RATING REFER TO THE MARKING ADJACENT TO THE SYMBOL.

CE SYMBOLE INDIQUE QUE LE FUSIBLE UTLISE EST E LENT.POUR UNE PROTECTION PERMANENTE,N'UTILISER QUE DES FUSIBLES DE MEME TYPE. CE DARNIER EST INDIQUE LA QU LE PRESENT SYMBOL EST APPOSE.

NOTE

THE COMPONENTS IDENTIFIED BY MAR
REPLACE ONLY WITH PART NUMBER SP
VOLTAGE (MEASURED WITH VOLTMETE
ELECTROLYTIC CAPACITORS ( )
ALL CAPACITORS ARE IN pF/50WV UNLE
EX) 030 → 3pF 330 → 33pF 331 → 330pF
THE THICK LINES ON PC BOARD ARE TH
EX) PRINTING SIDE
CIRCUIT IS SUBJECT TO CHANGE FOR I

E F G H

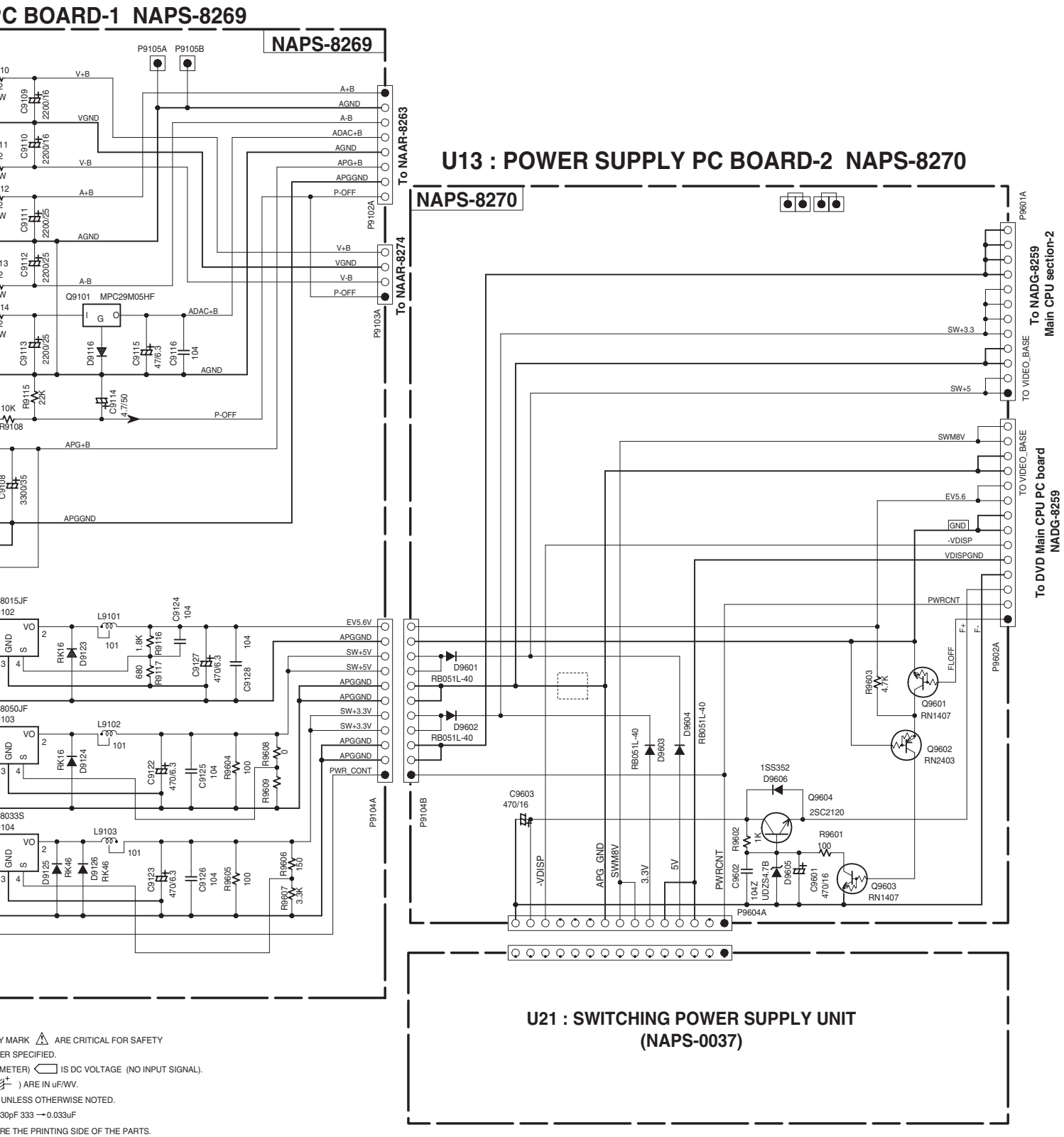

Y MARK ⚠ ARE CRITICAL FOR SAFETY
ER SPECIFIED.
METER) ⟨ IS DC VOLTAGE (NO INPUT SIGNAL).
) ARE IN uF/WV.
UNLESS OTHERWISE NOTED.
30pF 333 → 0.033uF
RE THE PRINTING SIDE OF THE PARTS.
E
FOR IMPROVEMENT.

SCHEMATIC DIAGRAM 5/18

U18 : AUDIO DAC PC BOARD (1/2) NAAR-8263

NAAR-8263

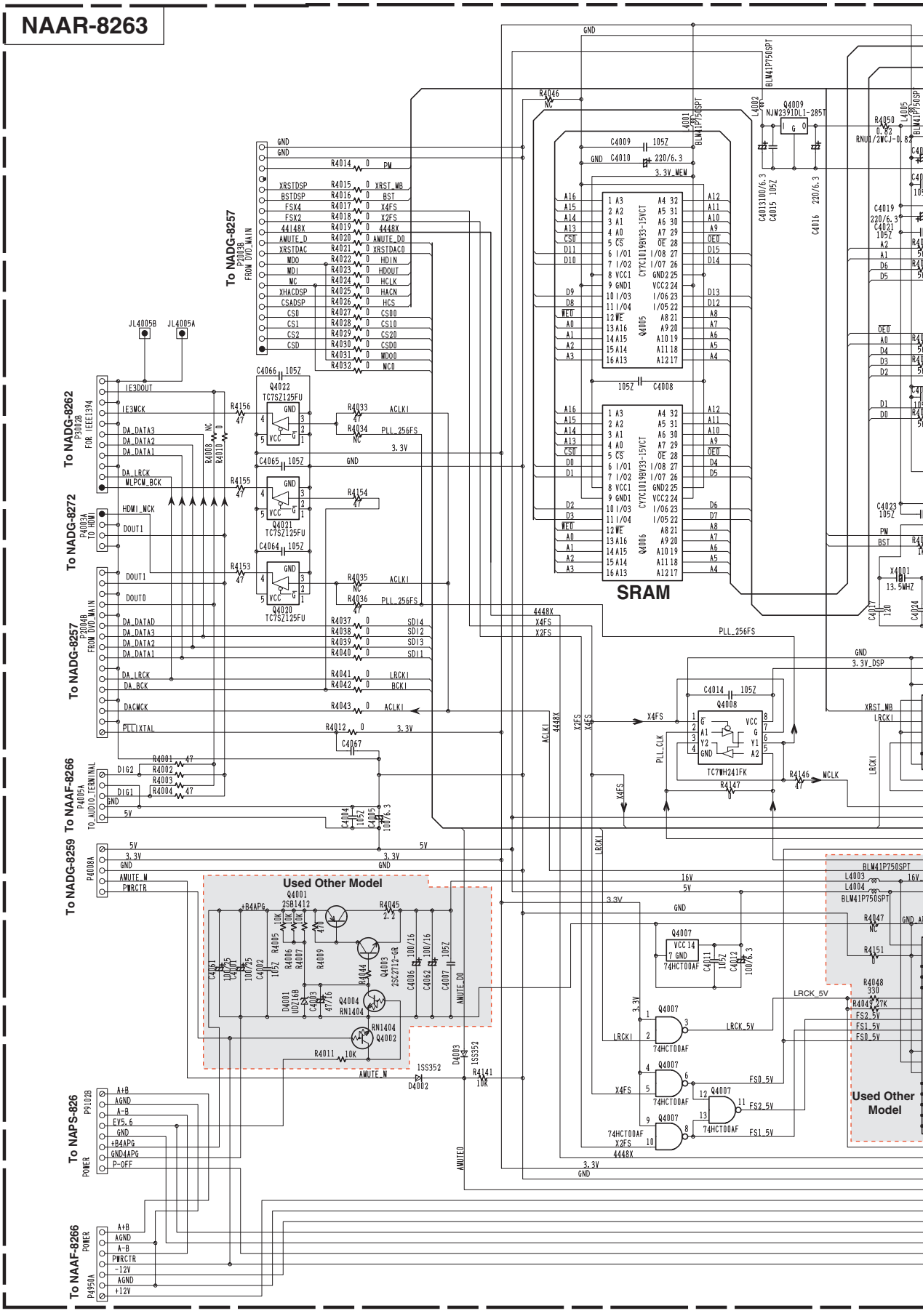

E F G H

AUDIO/ DSP SECTION

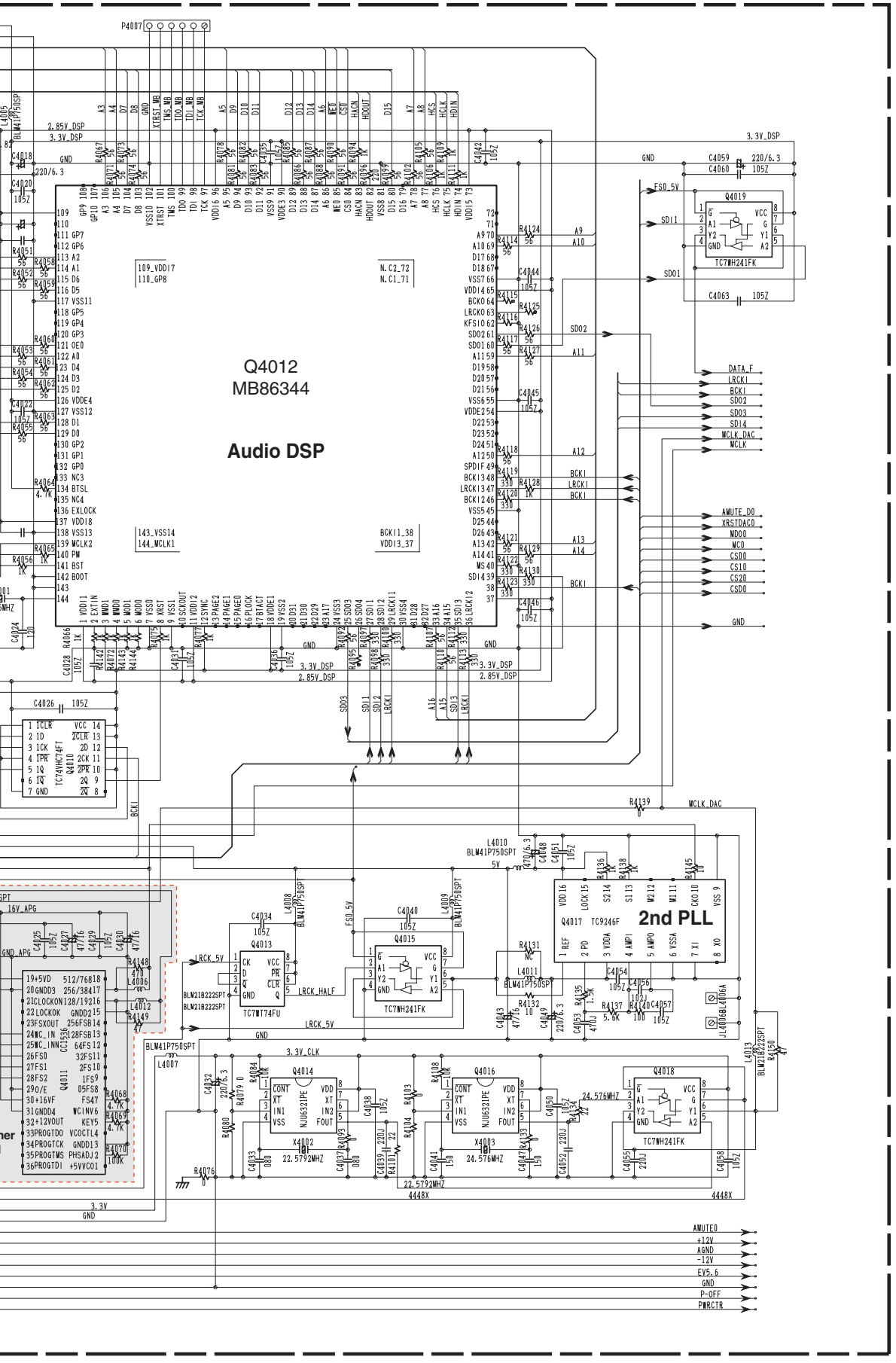

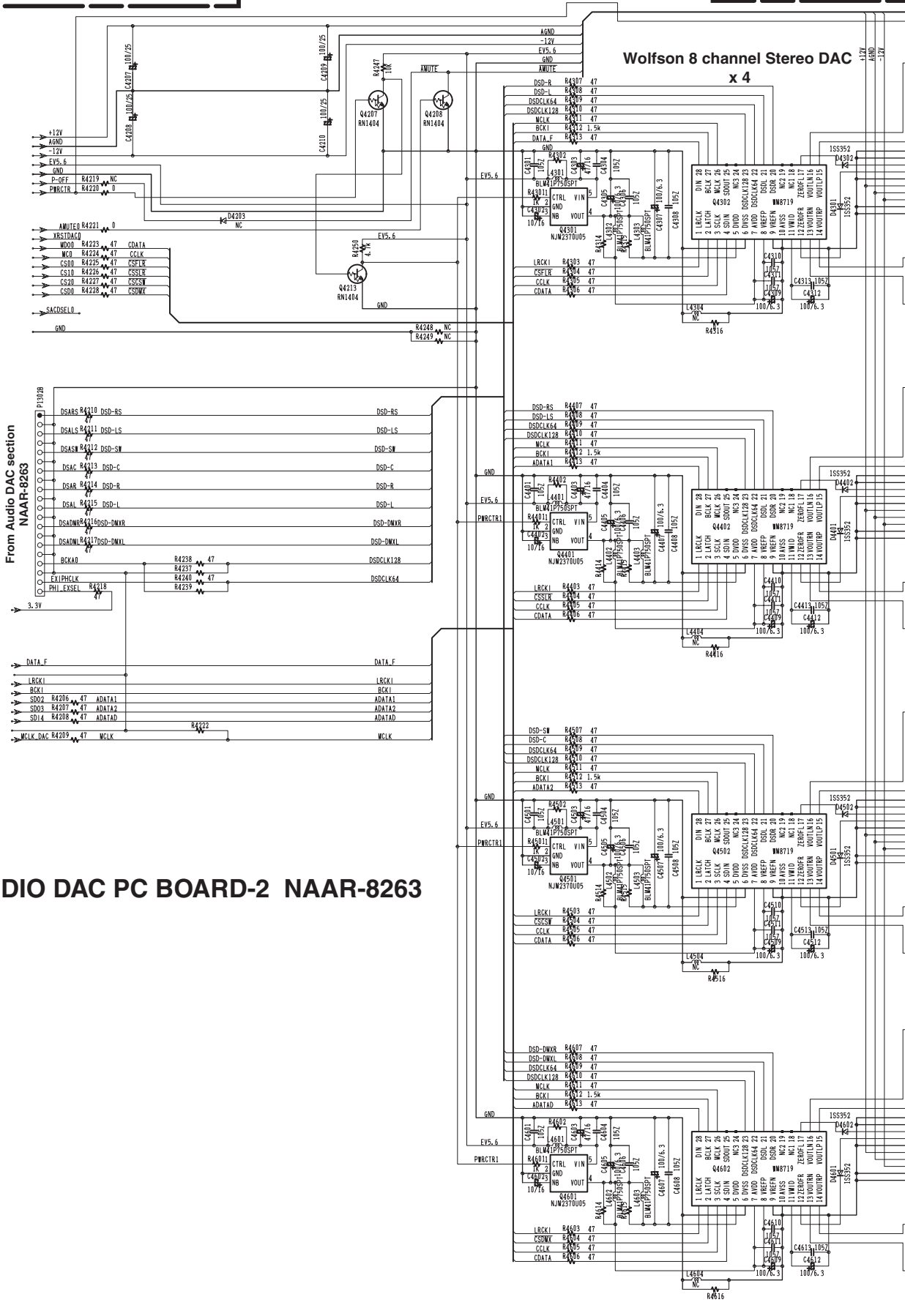
Wolfson 8 channel Stereo DAC
x 4
From Audio DAC section
NAAR-8263
U18 : AUDIO DAC PC BOARD-2 NAAR-8263

E F G H

DAC SECTION

NAAR-8263

VLSC x 8 channel

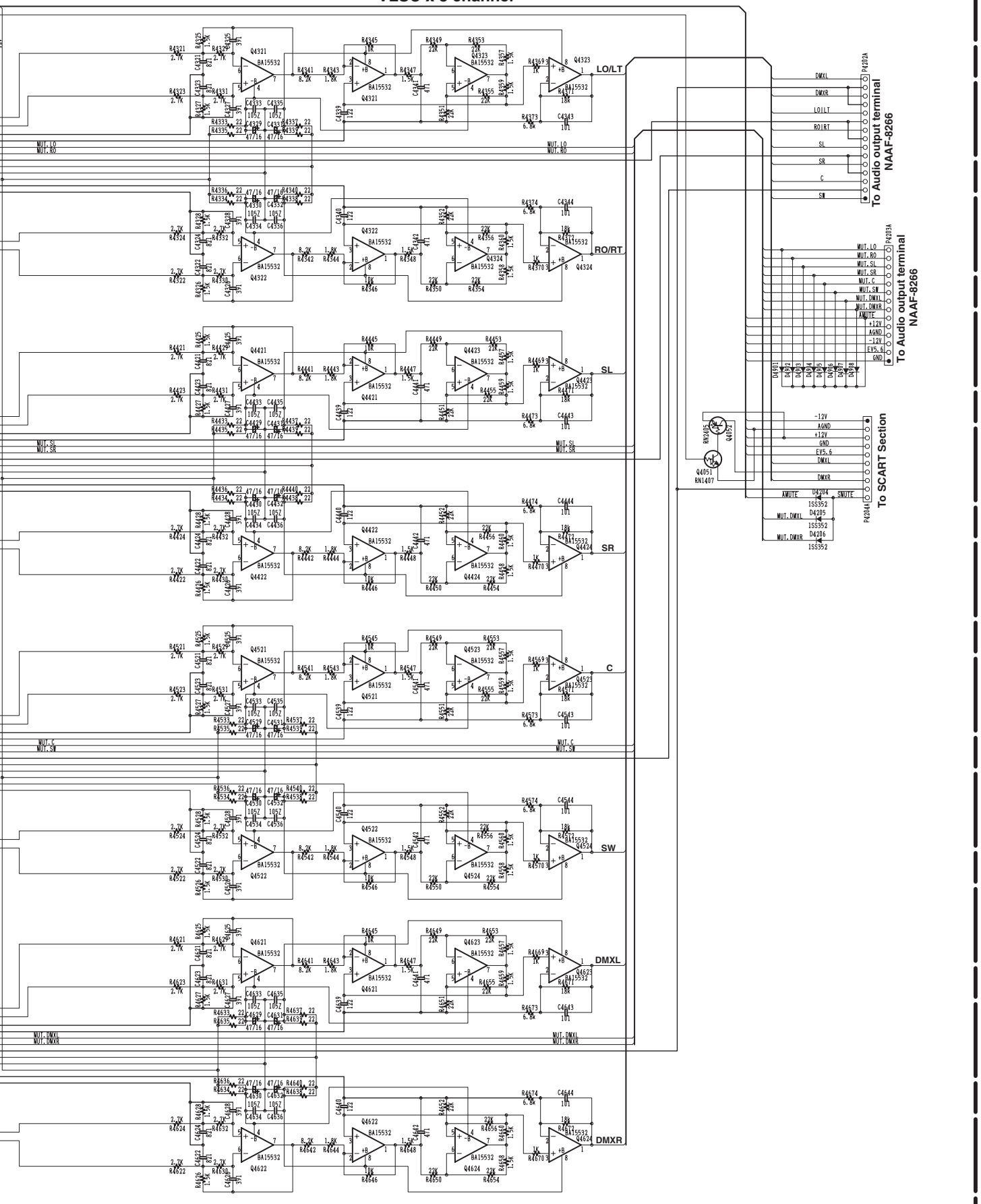

SCHEMATIC DIAGRAM-7/18

U09 : AUDIO OUTPUT PC BOARD NAAF-8266

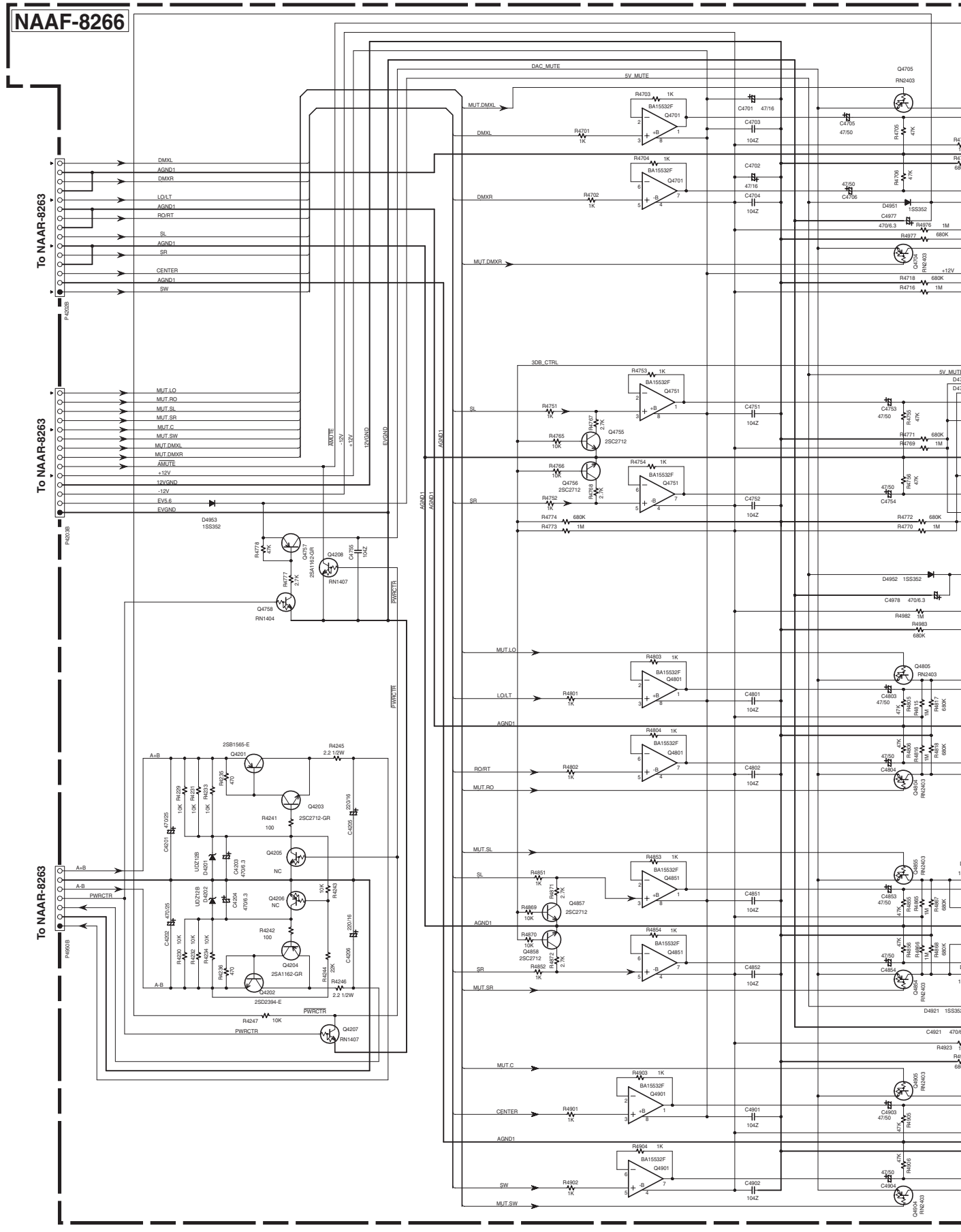

E F G H

AUDIO OUTPUT SECTION

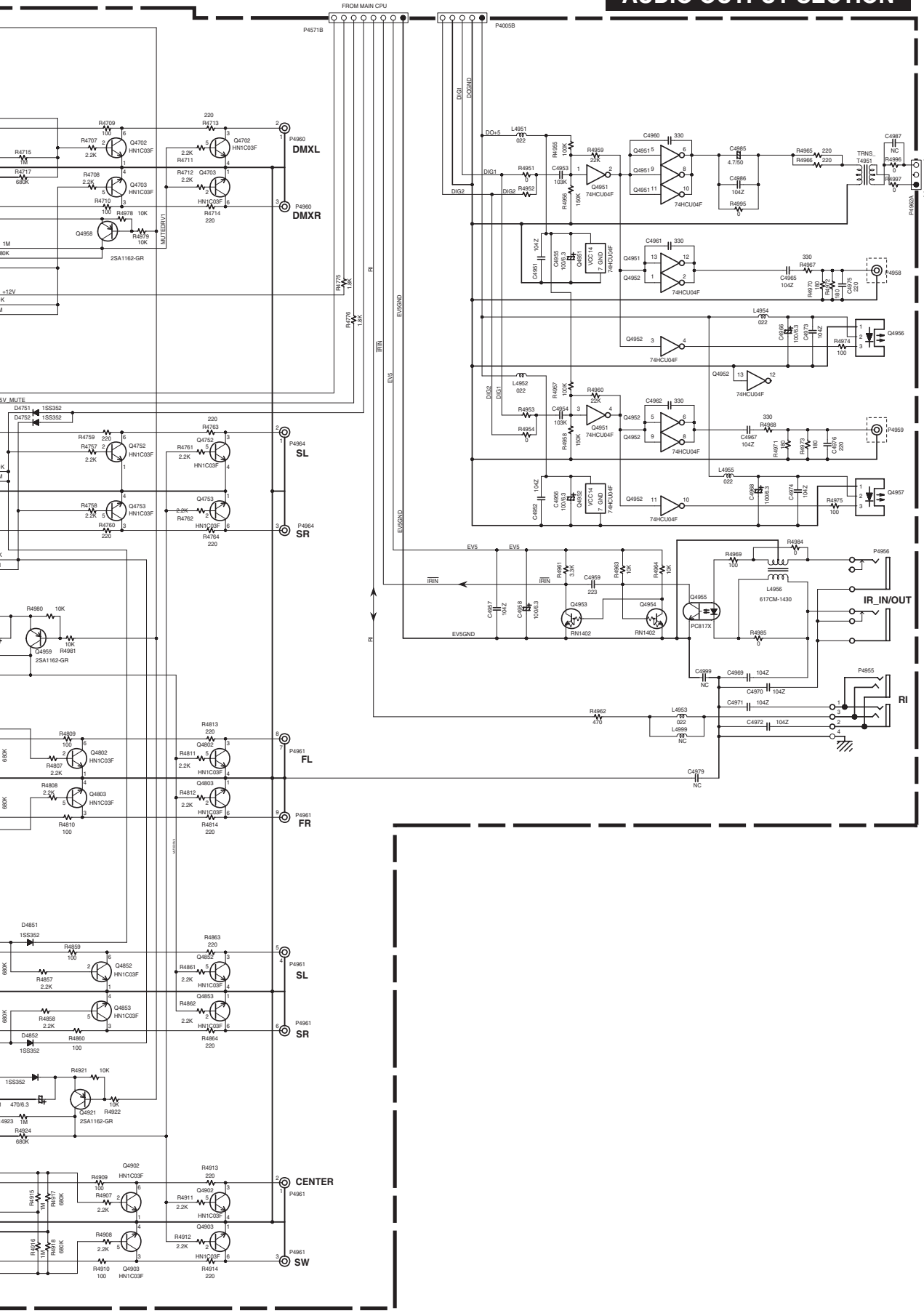

SCHEMATIC DIAGRAM 8/18

U02 : VIDEO OUTPUT TERMINAL PC BOARD NAVD-8258 (1/3)

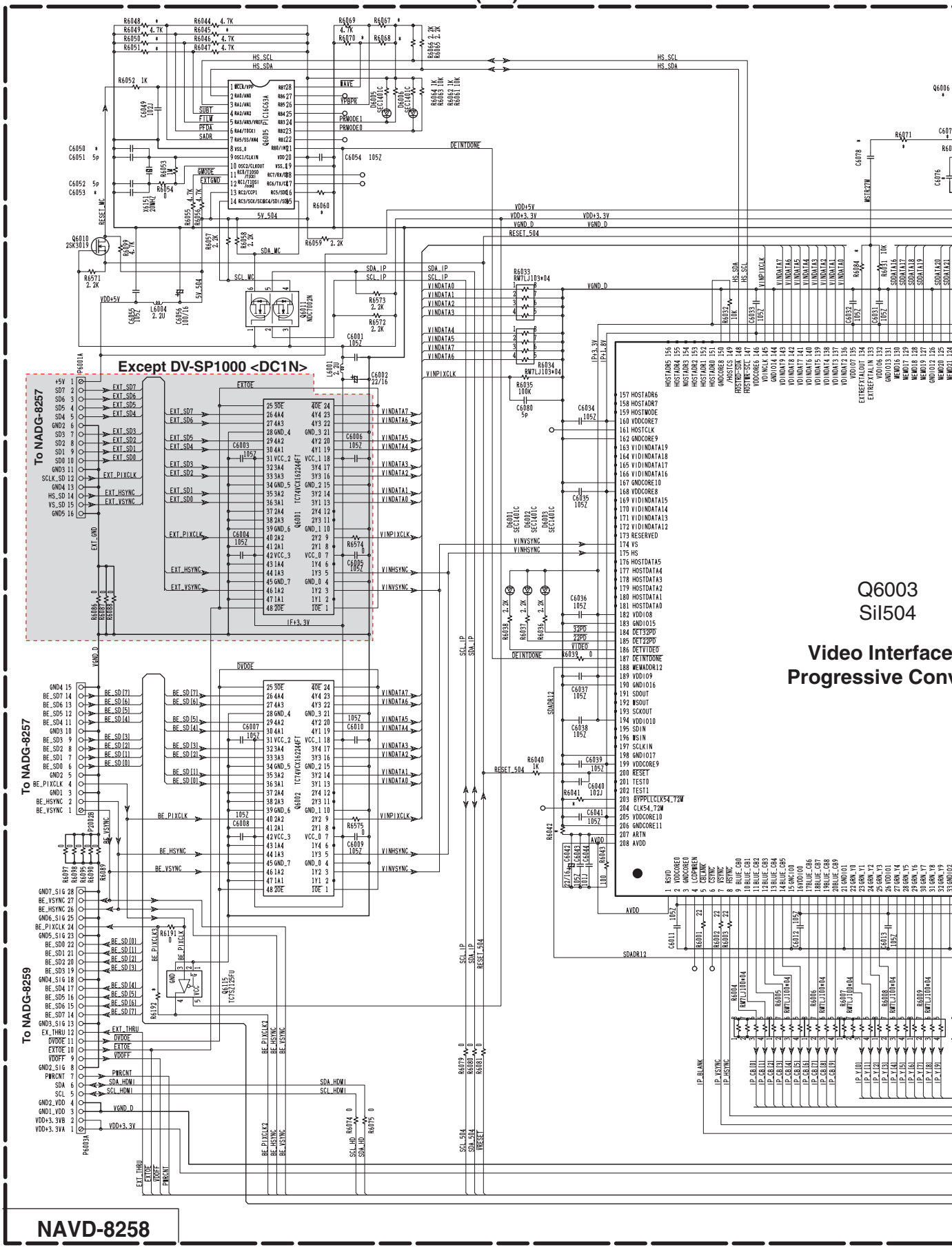

E F G H

VIDEO OUTPUT SECTION (1/3)

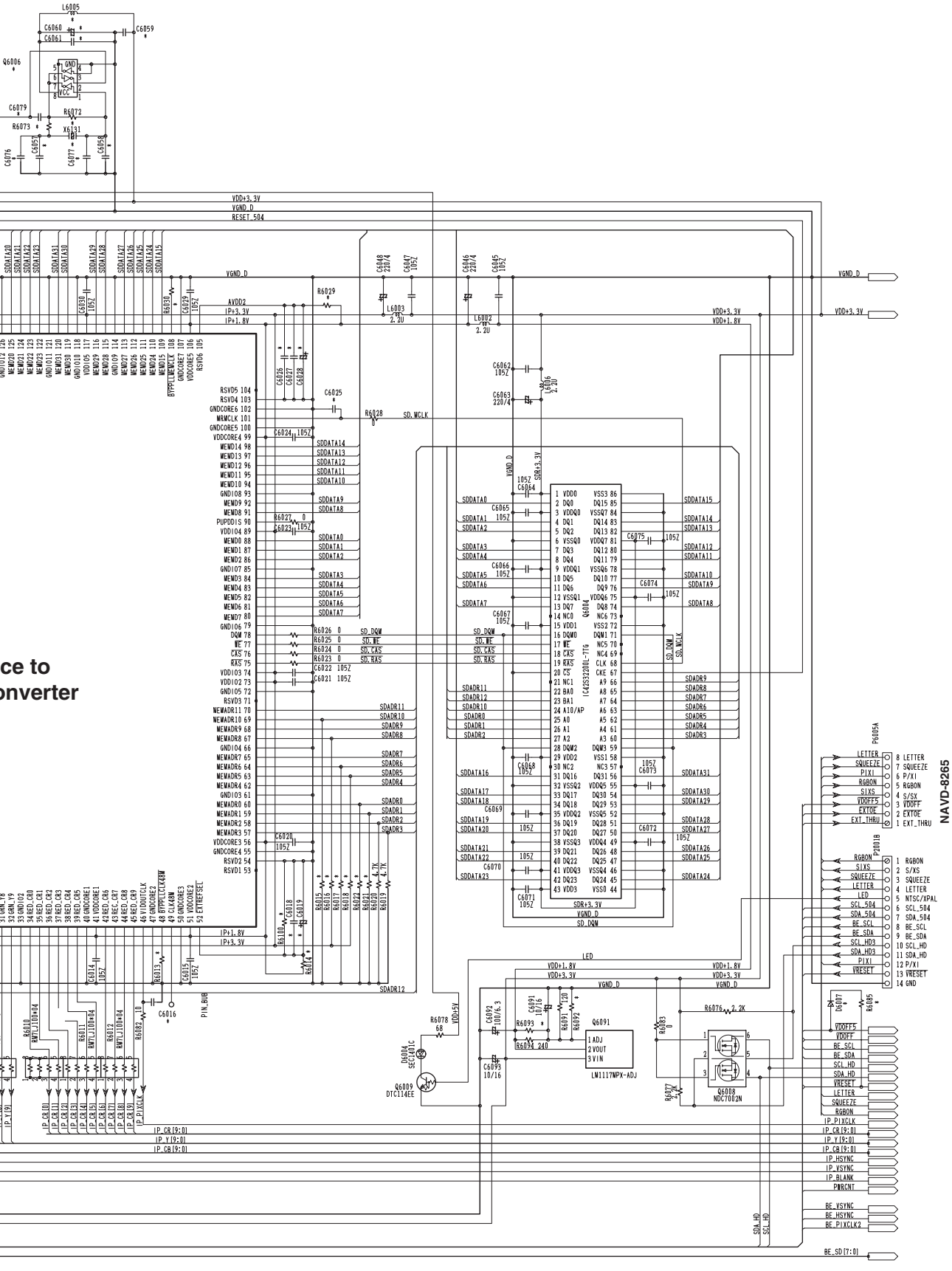

ce to
onverter

SCHEMATIC DIAGRAM 9/18

VIDEO OUTPUT SECTION (2/3)

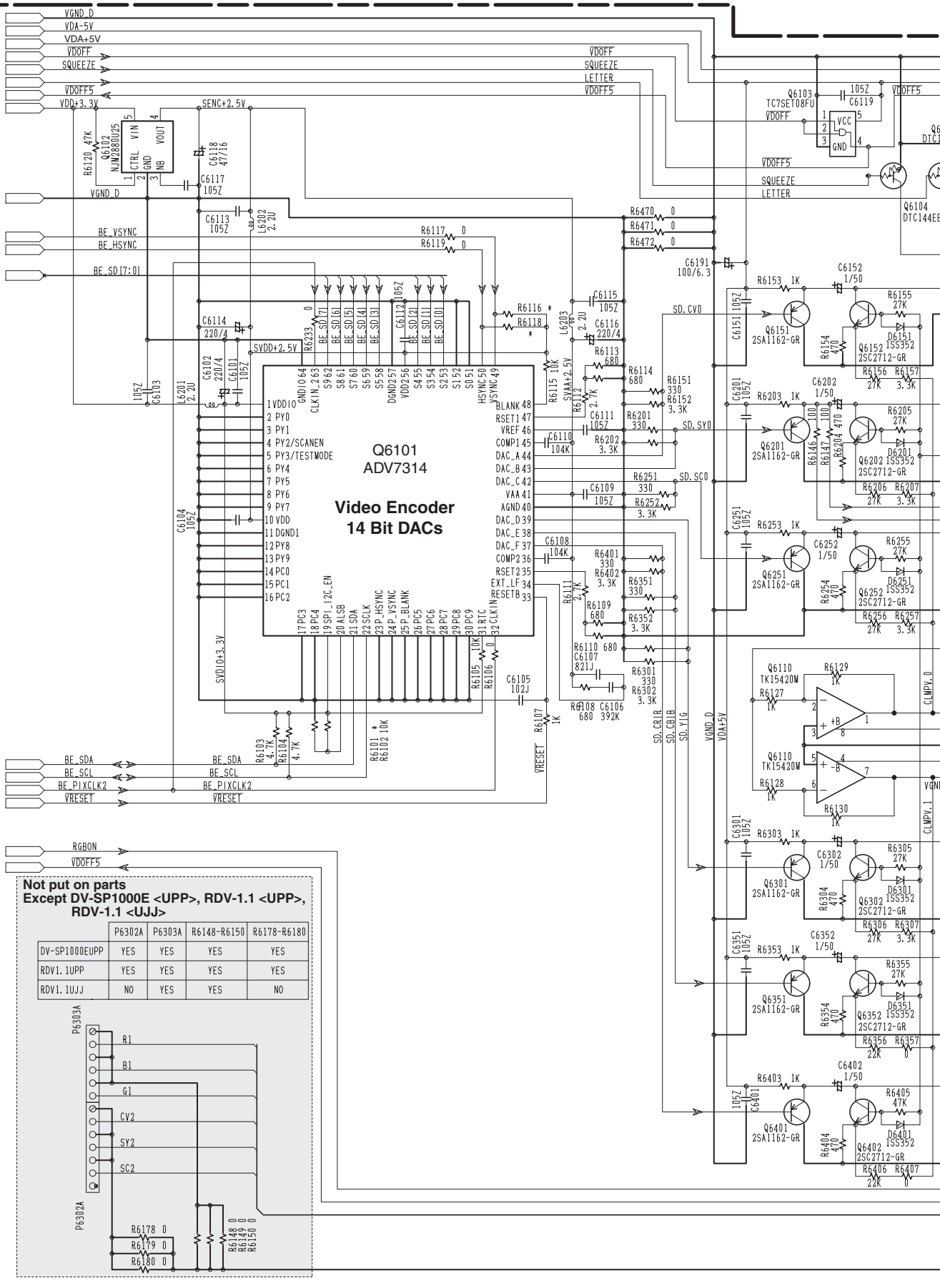

	P6302A	P6303A	R6148-R6150	R6178-R6180
DV-SP1000EUPP	YES	YES	YES	YES
RDV1.1UPP	YES	YES	YES	YES
RDV1.1UJJ	NO	YES	YES	NO

E F G H

U02 : VIDEO OUTPUT TERMINAL PC BOARD
NAVD-8258 (2/3)

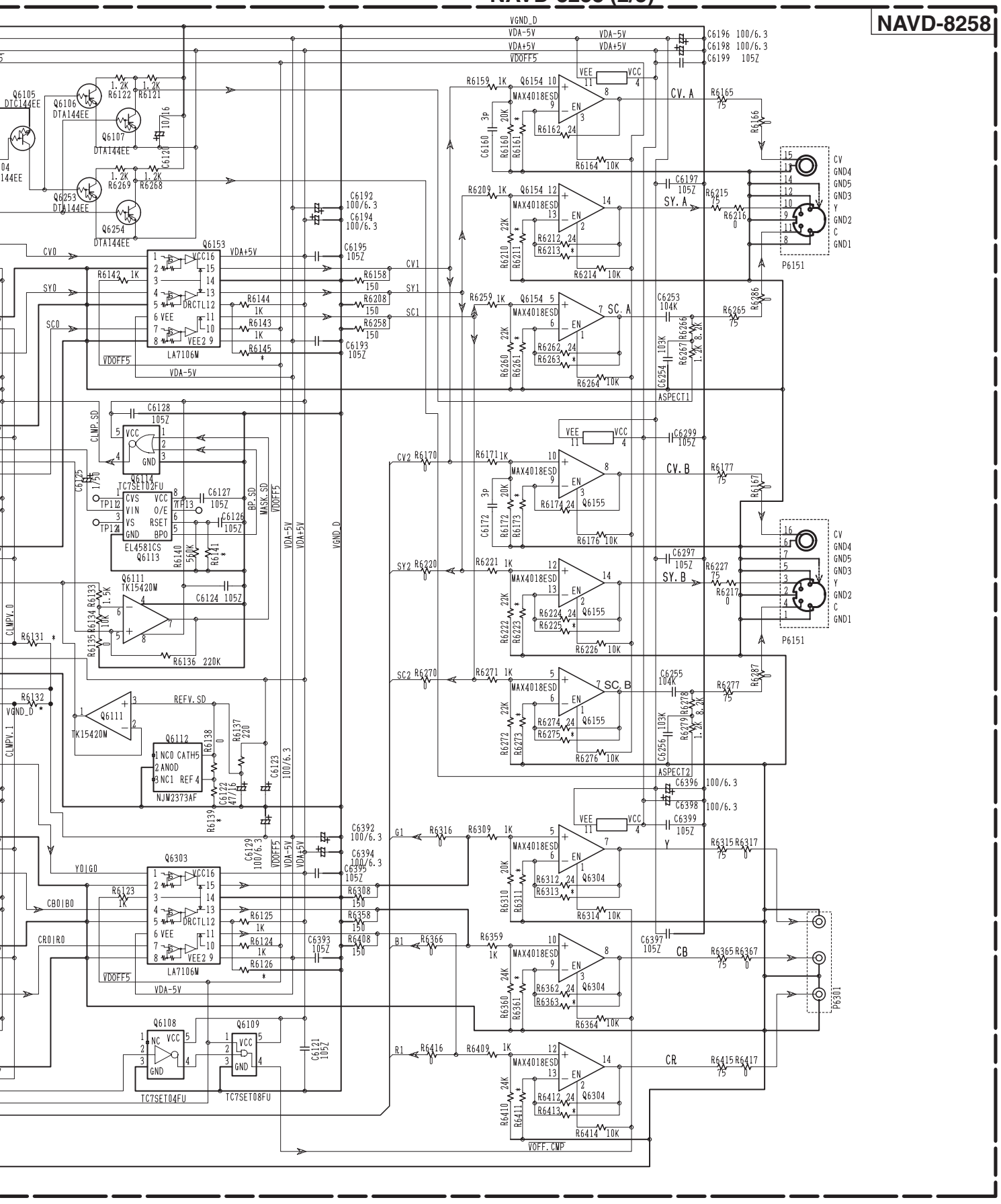

SCHEMATIC DIAGRAM 10/18 U02 : VIDEO OUTPUT TERMINAL PC BOARD NAVD-8258 (3/3

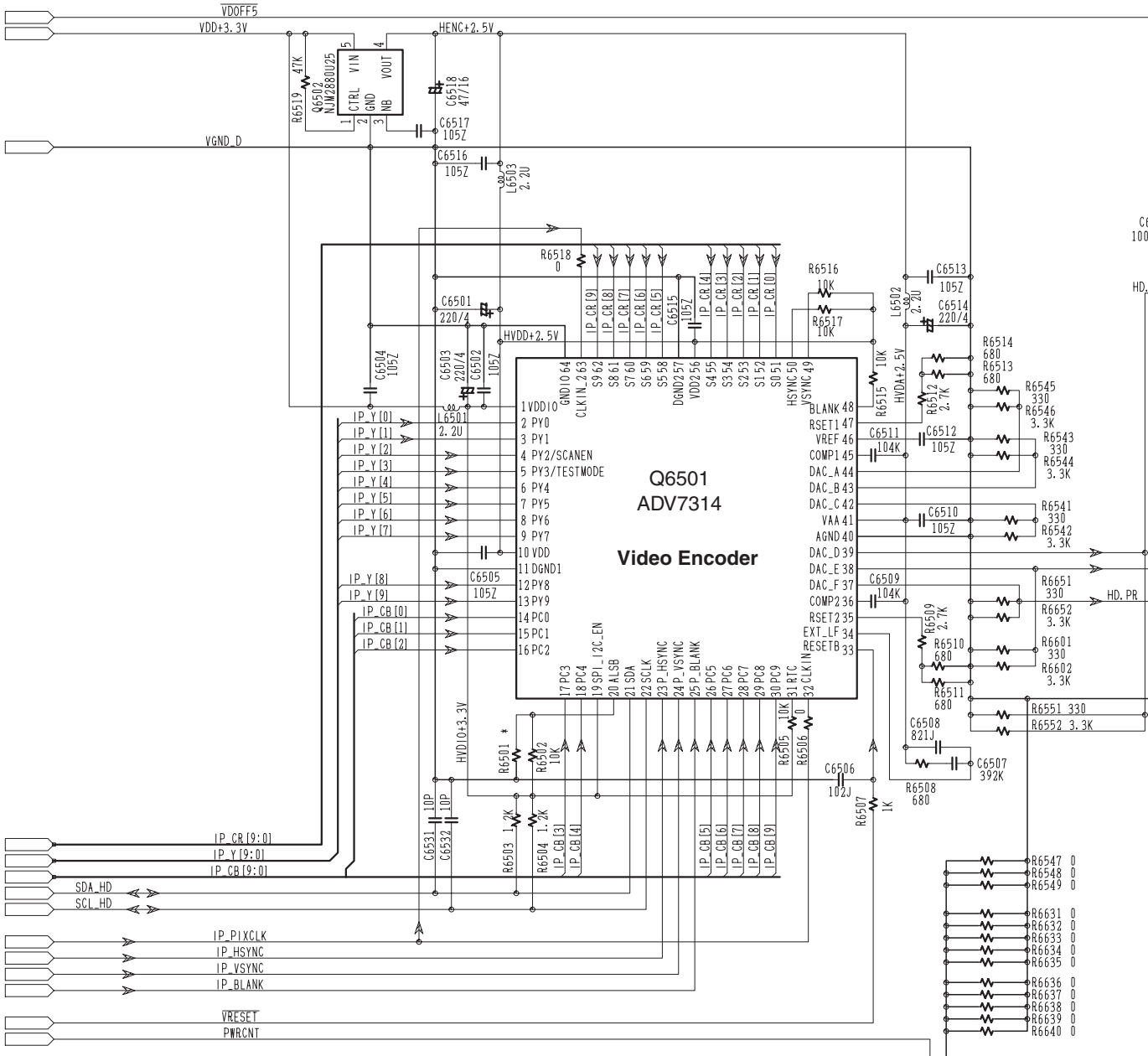

U06 : POWER SUPPLY PC BOARD-3 NAPS-8274

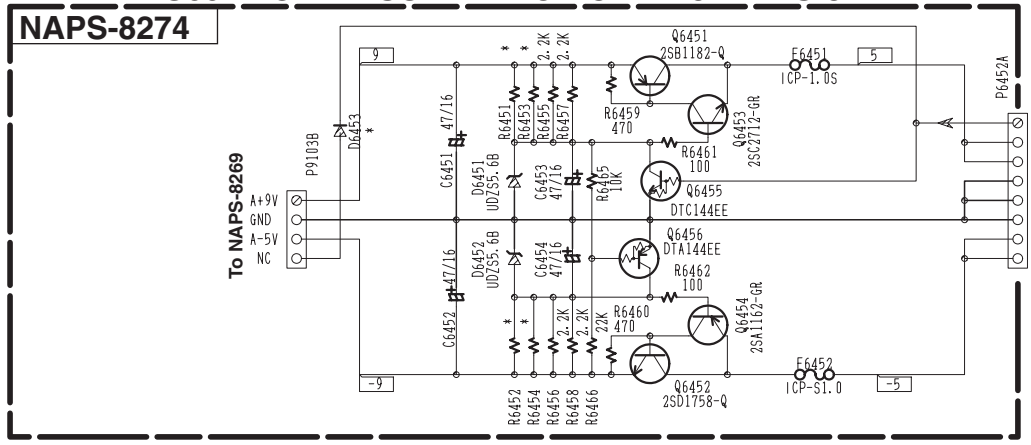

E F G H

3/3)

VIDEO OUTPUT SECTION (3/3)

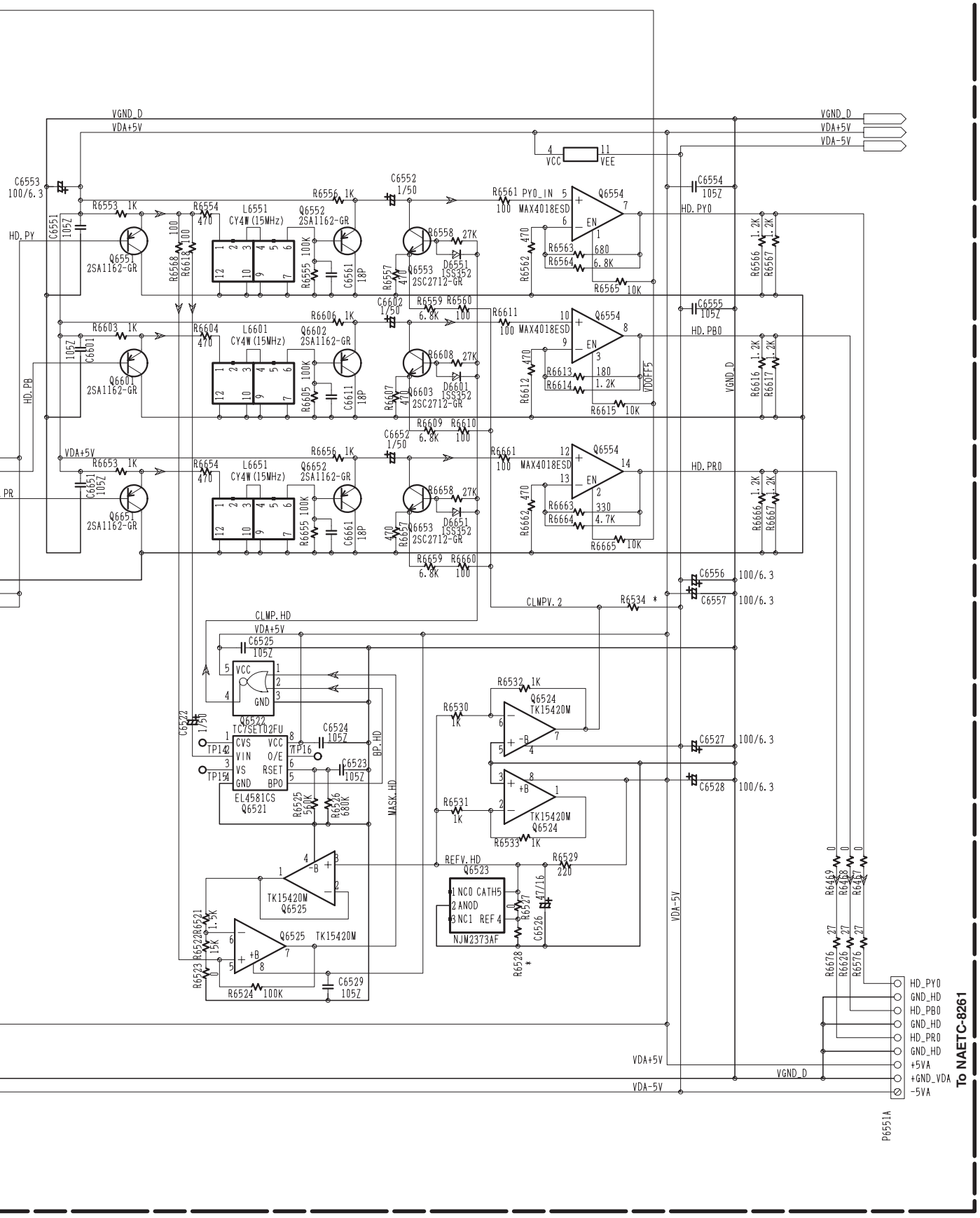

SCHEMATIC DIAGRAM 11/18 U08 : COMPONENT/ D-TERMINAL/ SCART TERMINAL PC BOARD NAVD-8265

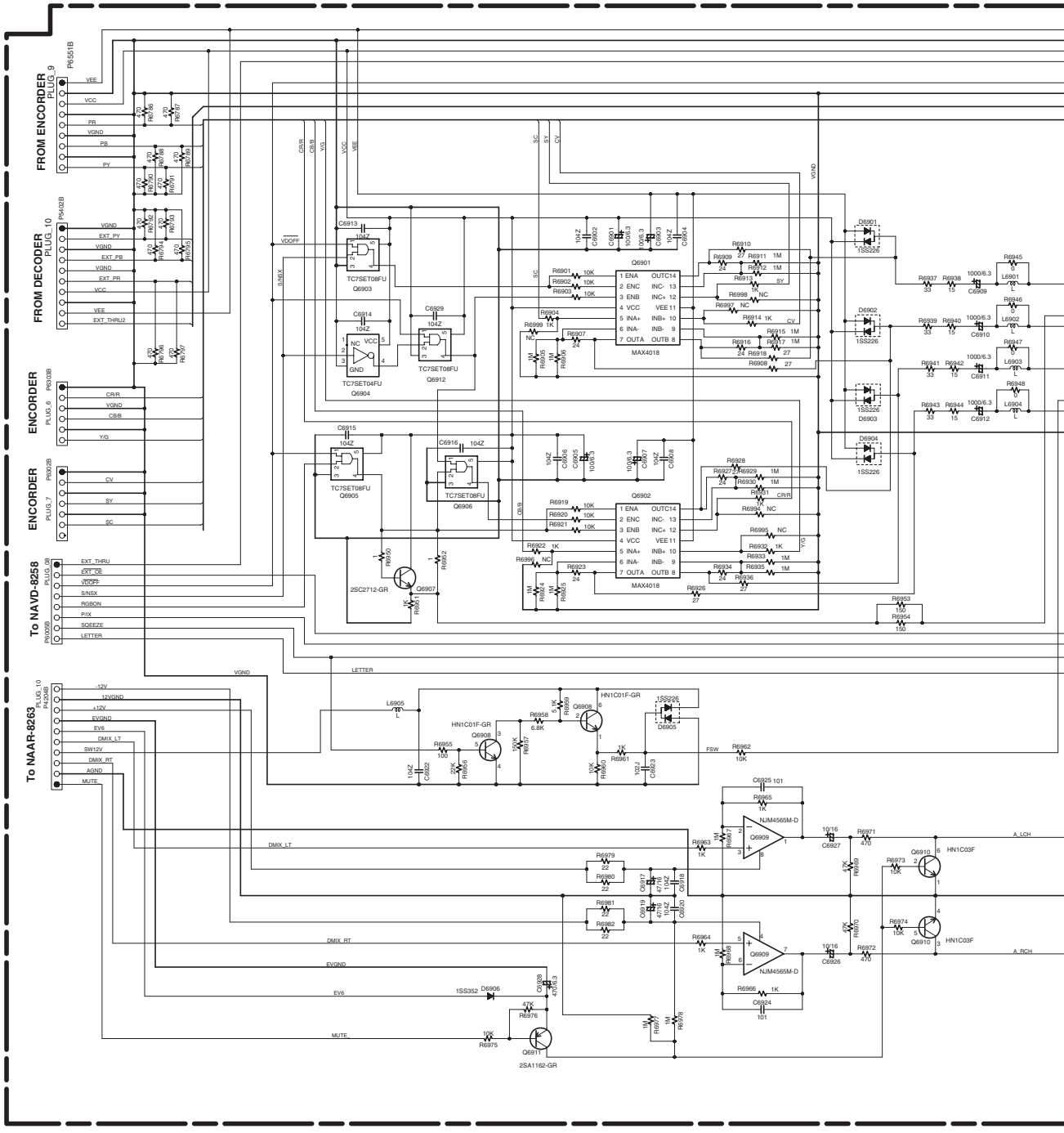

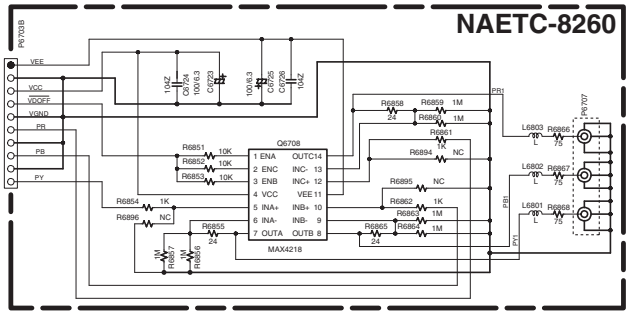

U14 : COMPONENT OUTPUT TERMINAL BOARD Except <DC1N>

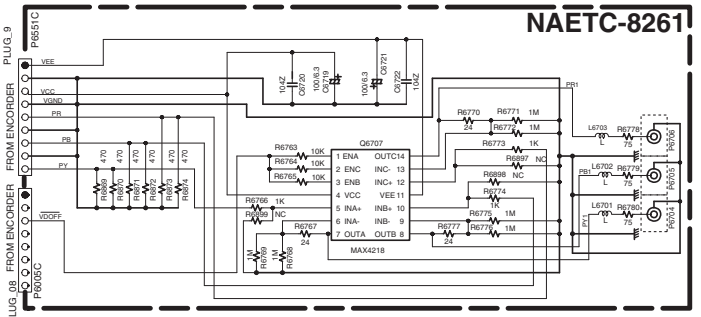

U14 : COMPONENT OUTPUT TERMINAL BOARD Only <DC1N>

E F G H

COMPONENT/ D-TERMINAL/ SCART SECTION

NAVD-8265

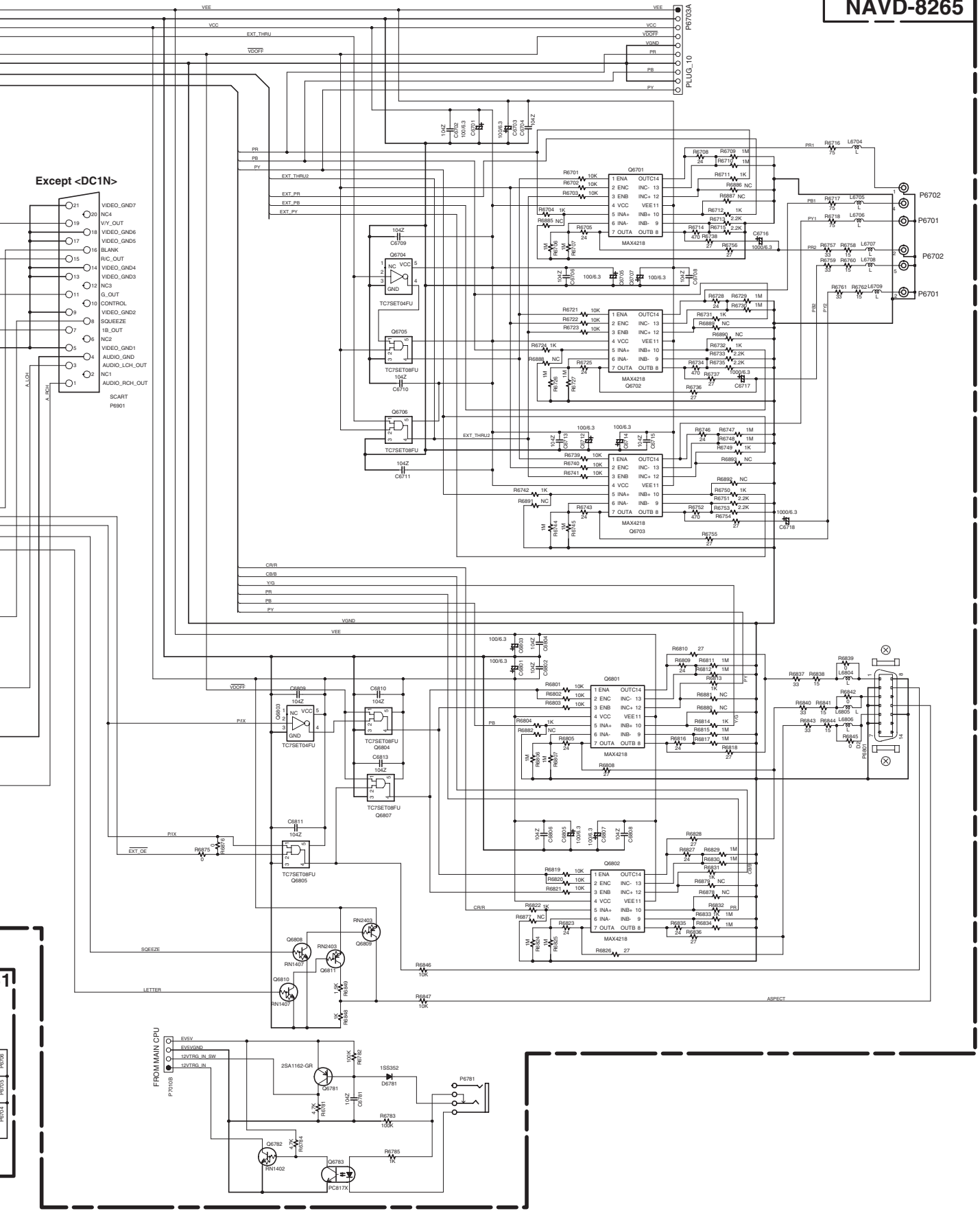

SCHEMATIC DIAGRAM 12/18 U19/ U20 : IEEE1394 TERMINAL PC BOARD NADG-8262

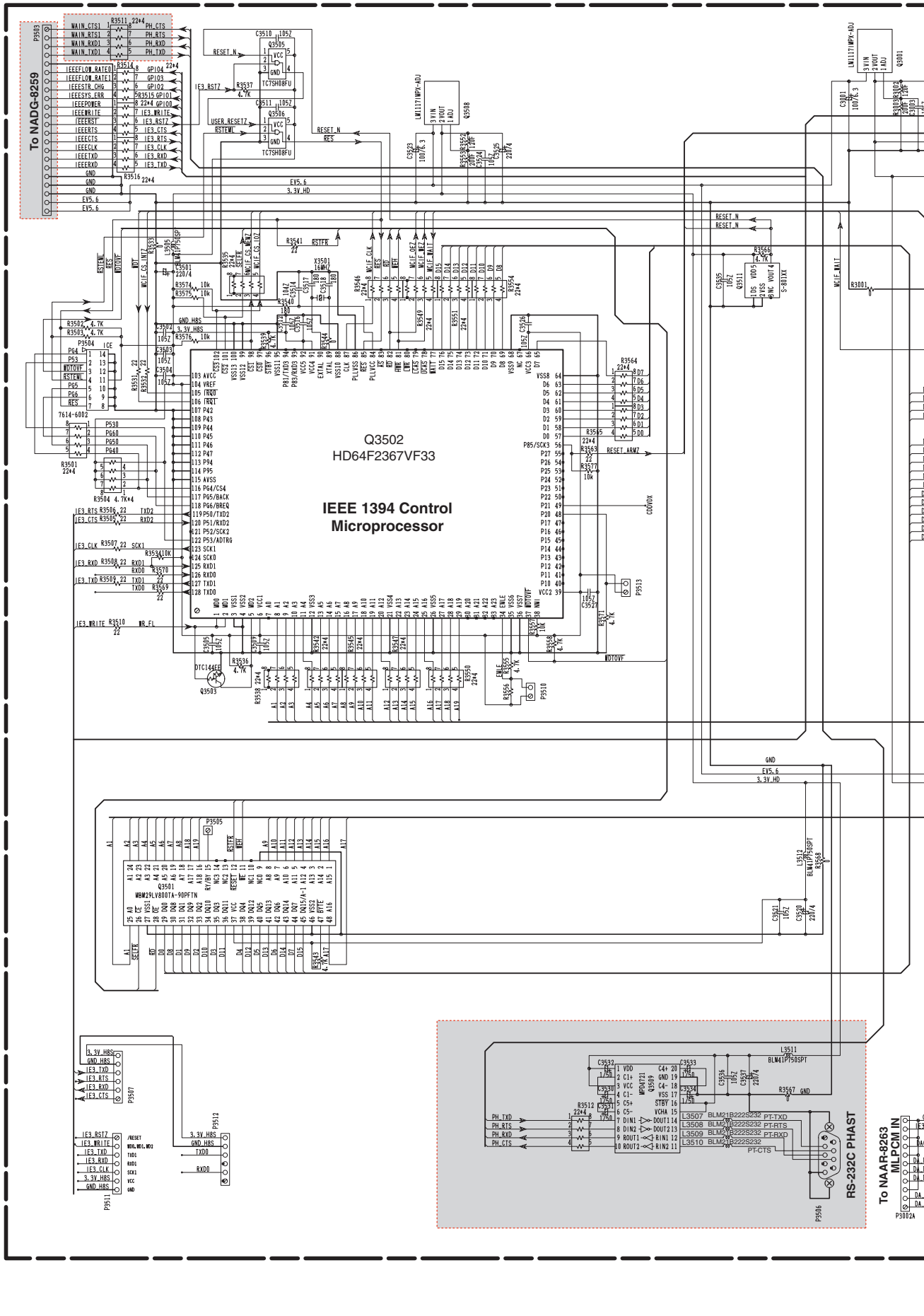

E F G H

IEEE SECTION

NADG-8262

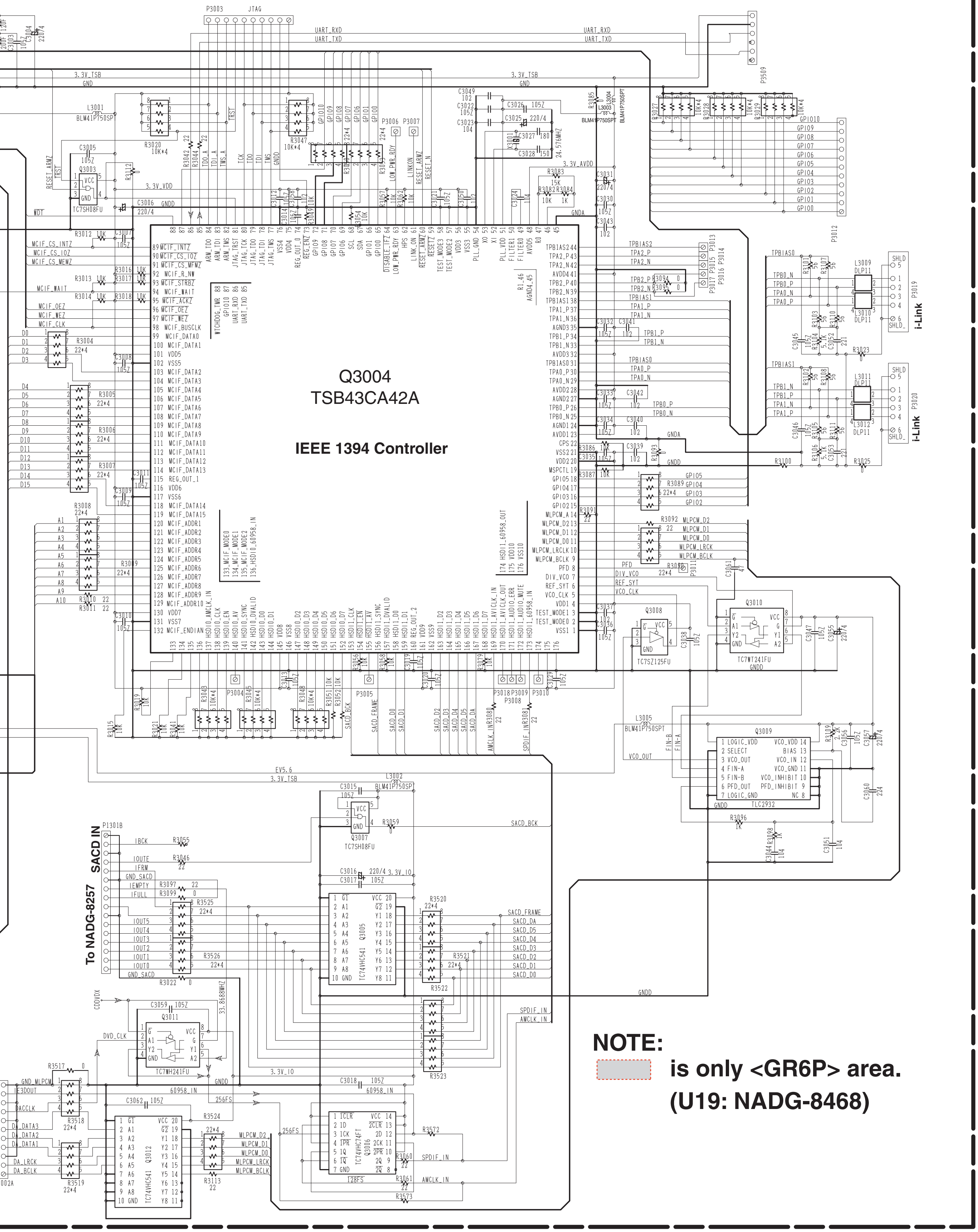

NOTE:

is only <GR6P> area.

(U19: NADG-8468)

SCHEMATIC DIAGRAM 14/18

U15 : DIGITAL VIDEO PROCESSOR PC BOARD (1/5) NADG-827

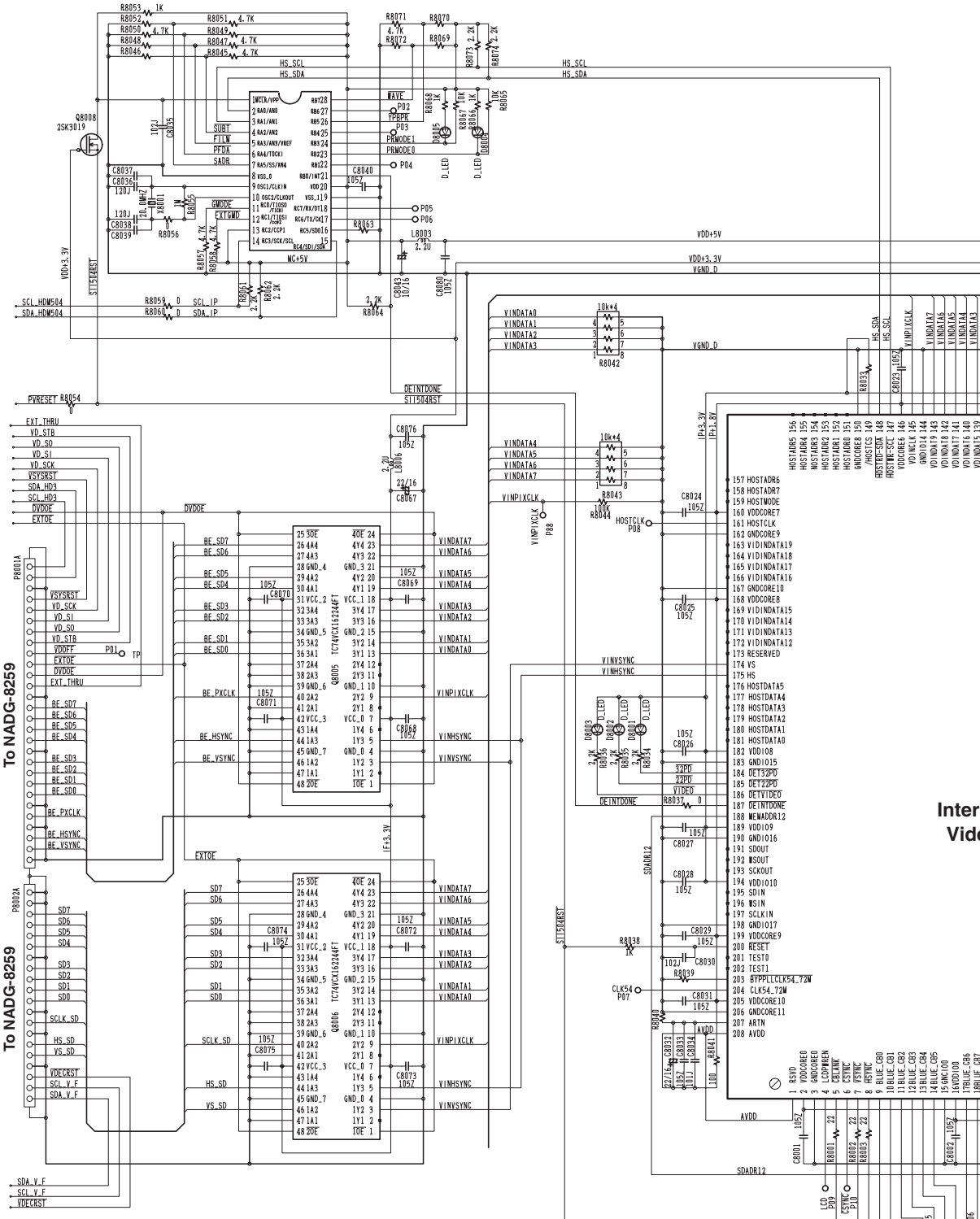

Inter
Vide

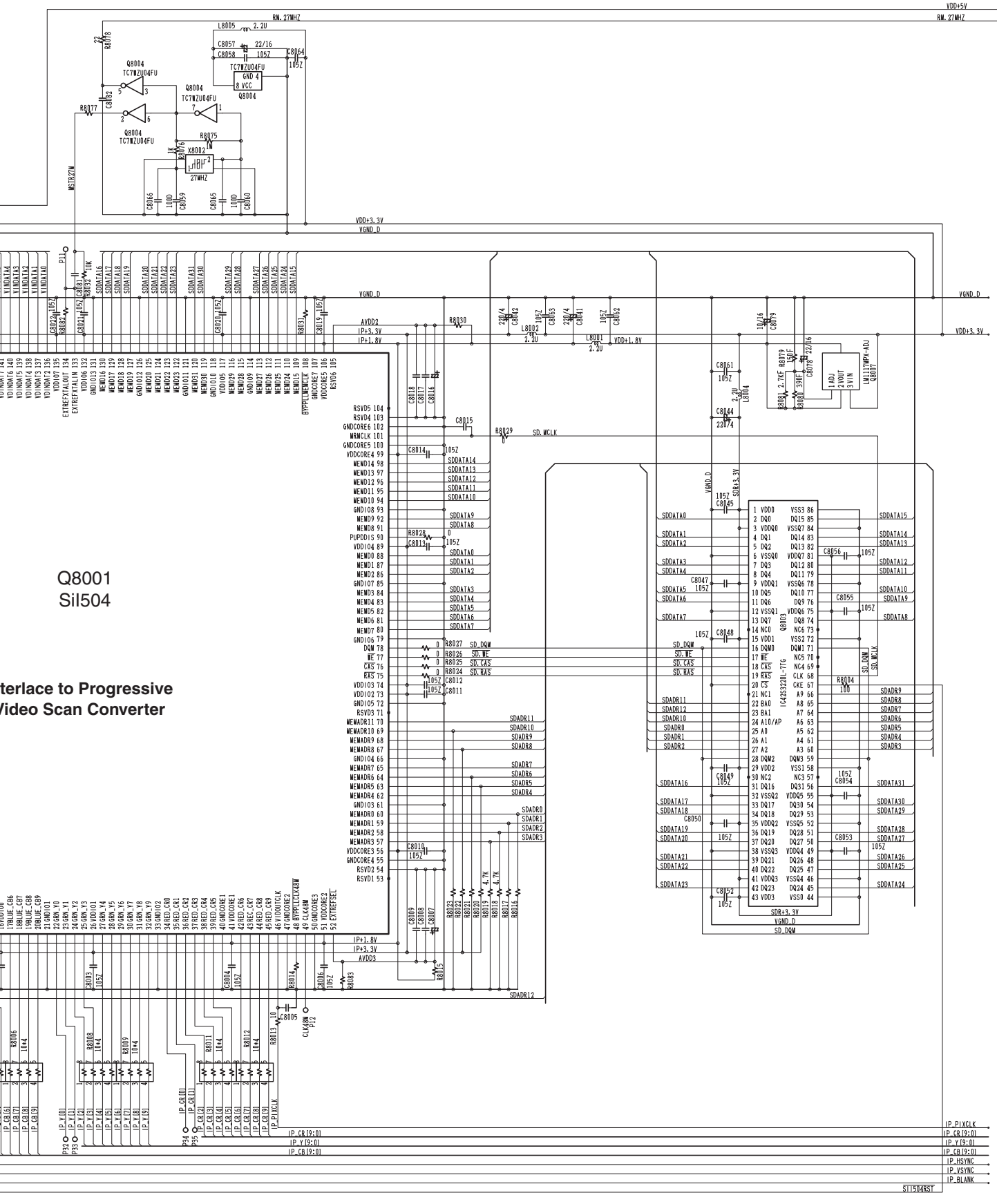
Q8001
Sil504
terlace to Progressive
Video Scan Converter

SCHEMATIC DIAGRAM 15/18

U15 : DIGITAL VIDEO PROCESSOR PC BOARD (2/5) NADG

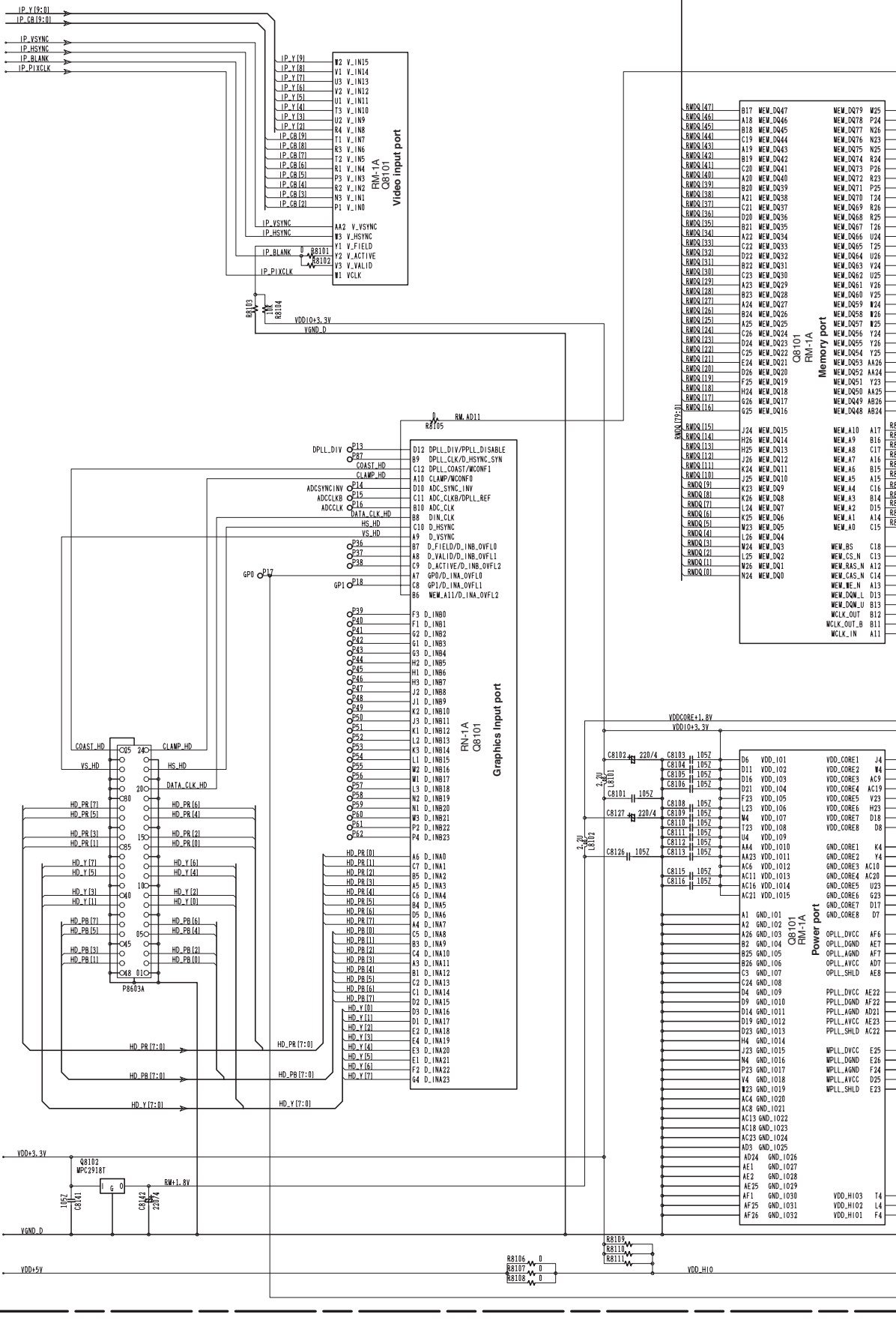

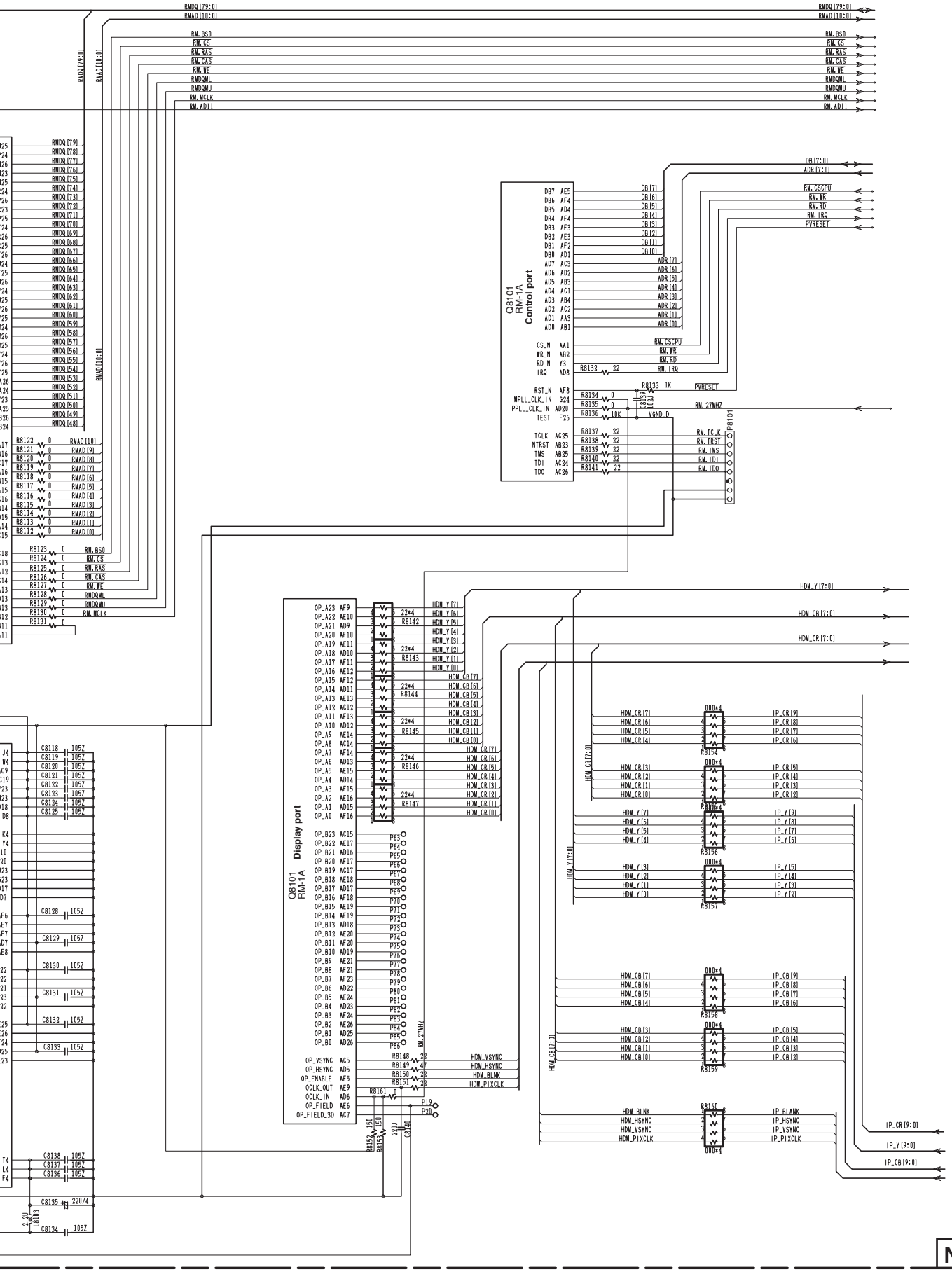
Q8101
RM-1A
Control port
Q8101
RM-1A
Display port
RMDQ [79:0]
RMAD [10:0]
RM. BS0
RM. CS
RM. RAS
RM. CAS
RM. WE
RMDQML
RMDQMU
RM. MCLK
RM. AD11
DB [7:0]
ADR [7:0]
RM. CSCPU
RM. WR
RM. RD
RM. IRQ
PVRESET
RM. 27MHZ
RM. TCLK
RM. TRST
RM. TMS
RM. TDI
RM. TDO
P8101
HDM_Y [7:0]
HDM_CB [7:0]
HDM_CR [7:0]
HDM_VSYNC
HDM_HSYNC
HDM_BLNK
HDM_PIXCLK
IP_CR [9:0]
IP_Y [9:0]
IP_CB [9:0]
IP_BLANK
IP_HSYNC
IP_VSYNC
IP_PIXCLK

SCHEMATIC DIAGRAM 16/18

U15 : DIGITAL VIDEO PROCESSOR PC BOARD (3/5) NADG-8

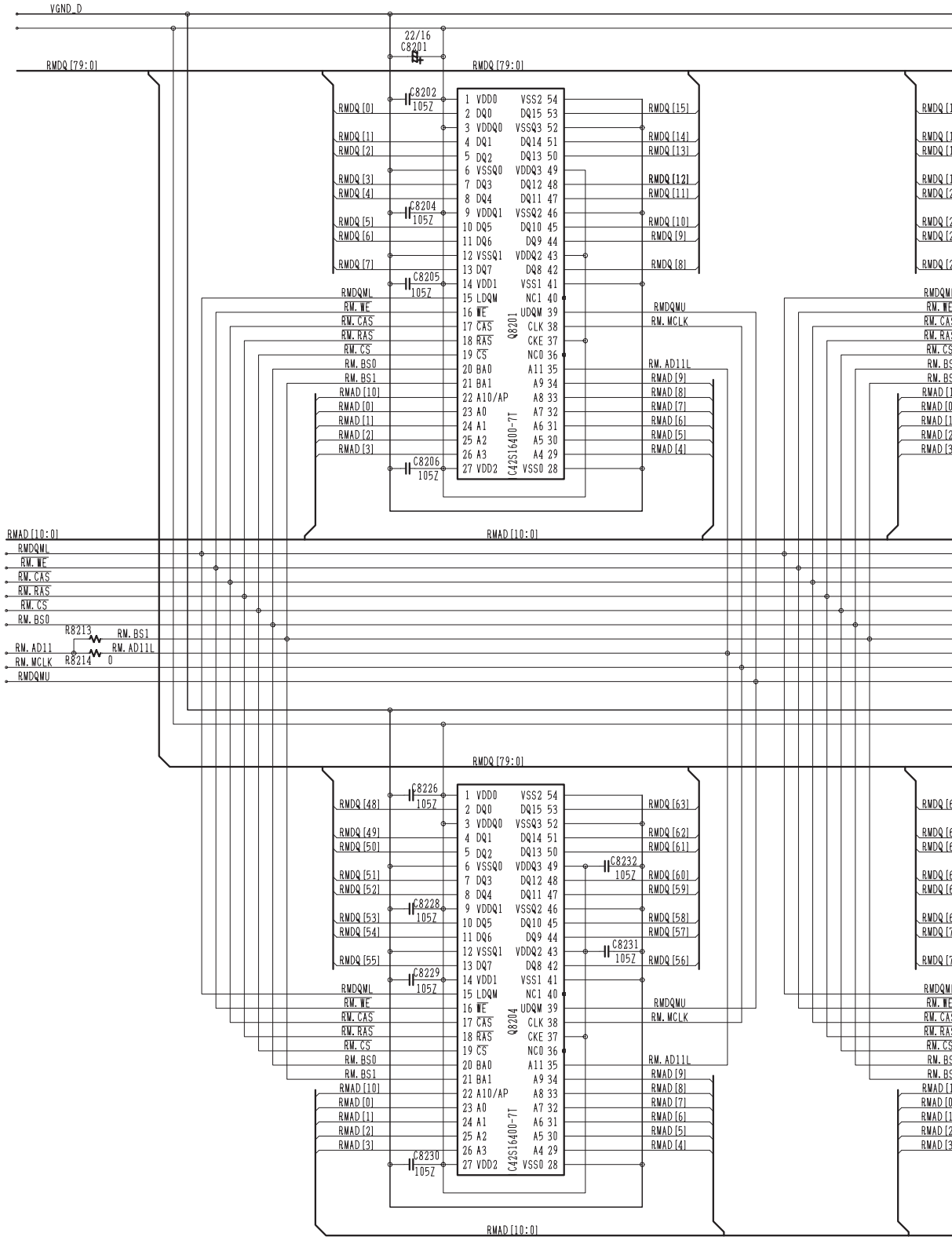

E F G H

G-8272

MEMORY SECTION

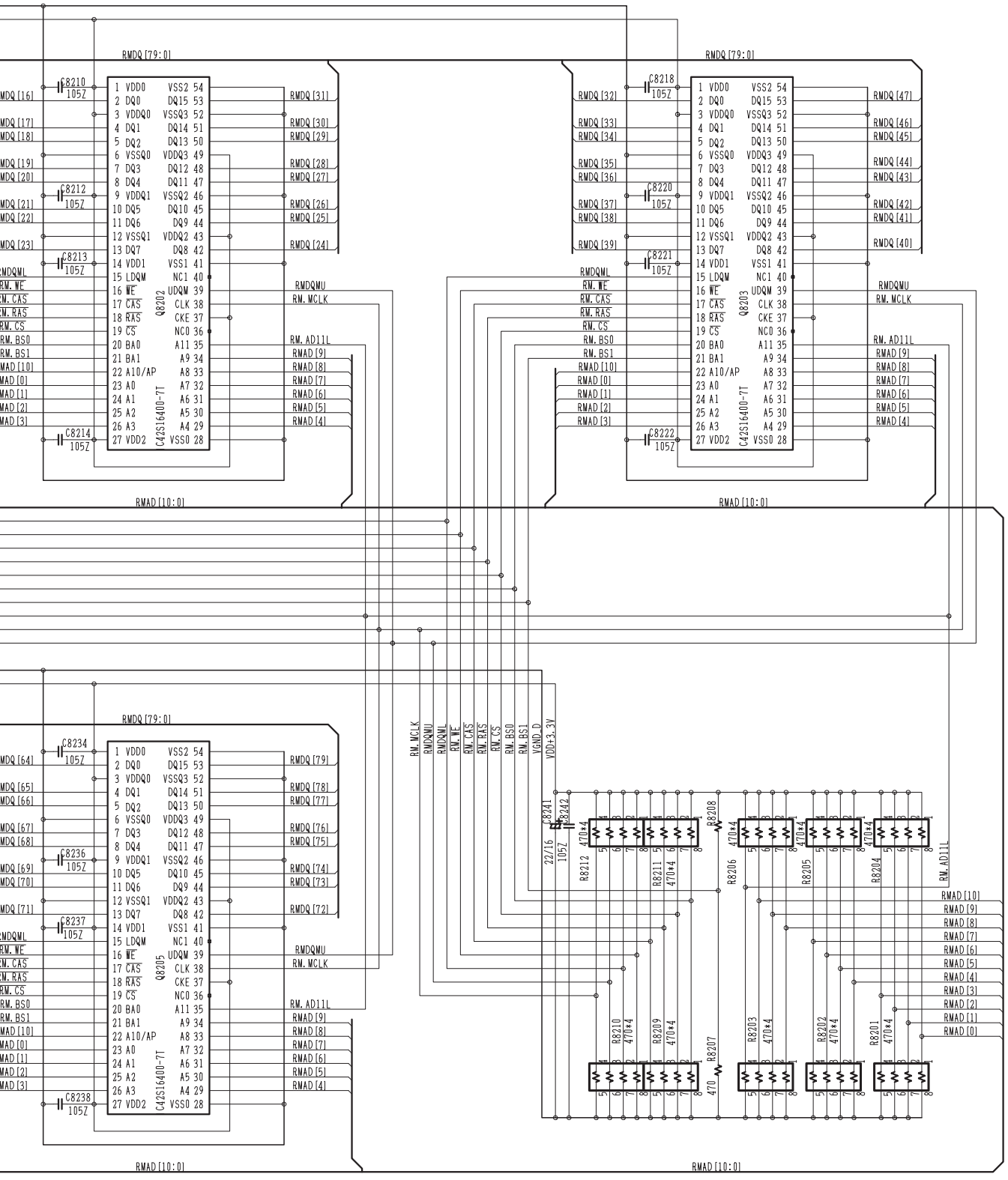

SCHEMATIC DIAGRAM 17/18

U15 : DIGITAL VIDEO PROCESSOR PC BOARD (4/5) NADG-827

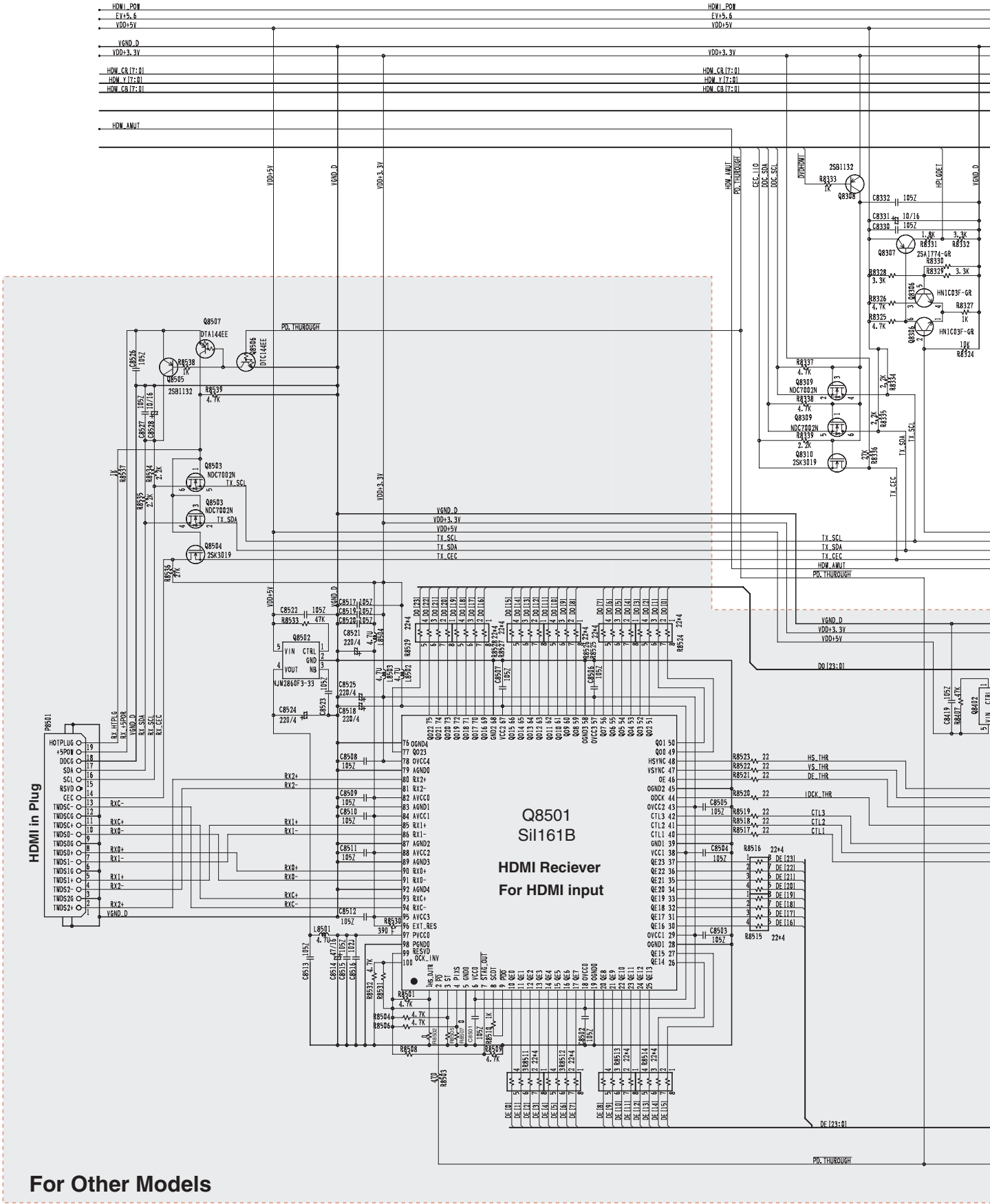

E F G H

HDMI SECTION

8272

NADG-8272

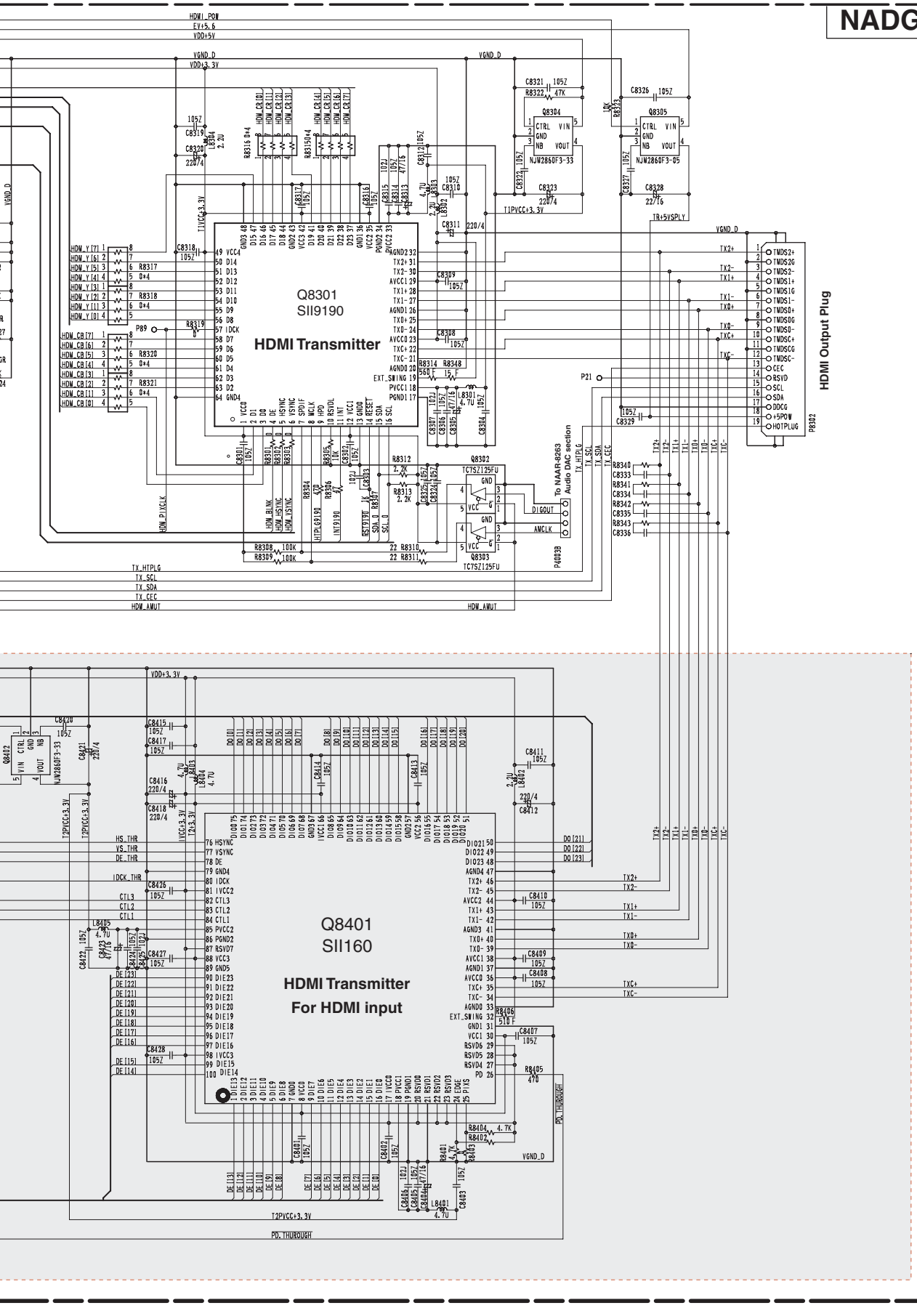

SCHEMATIC DIAGRAM 18/18

U15 : DIGITAL VIDEO PROCESSOR PC BOARD (5/5) NA

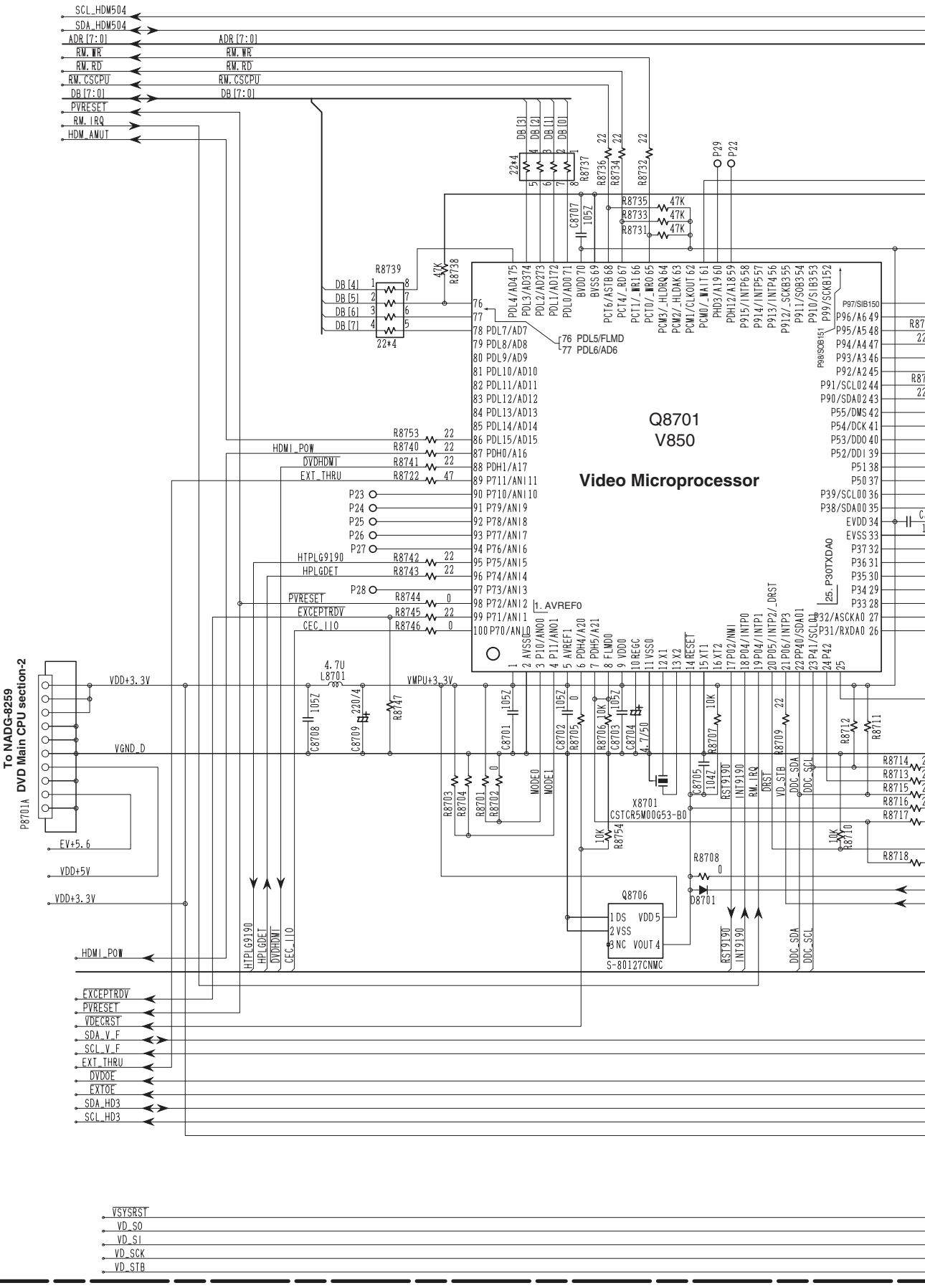

E F G H

NADG-8272

VIDEO MPU SECTION

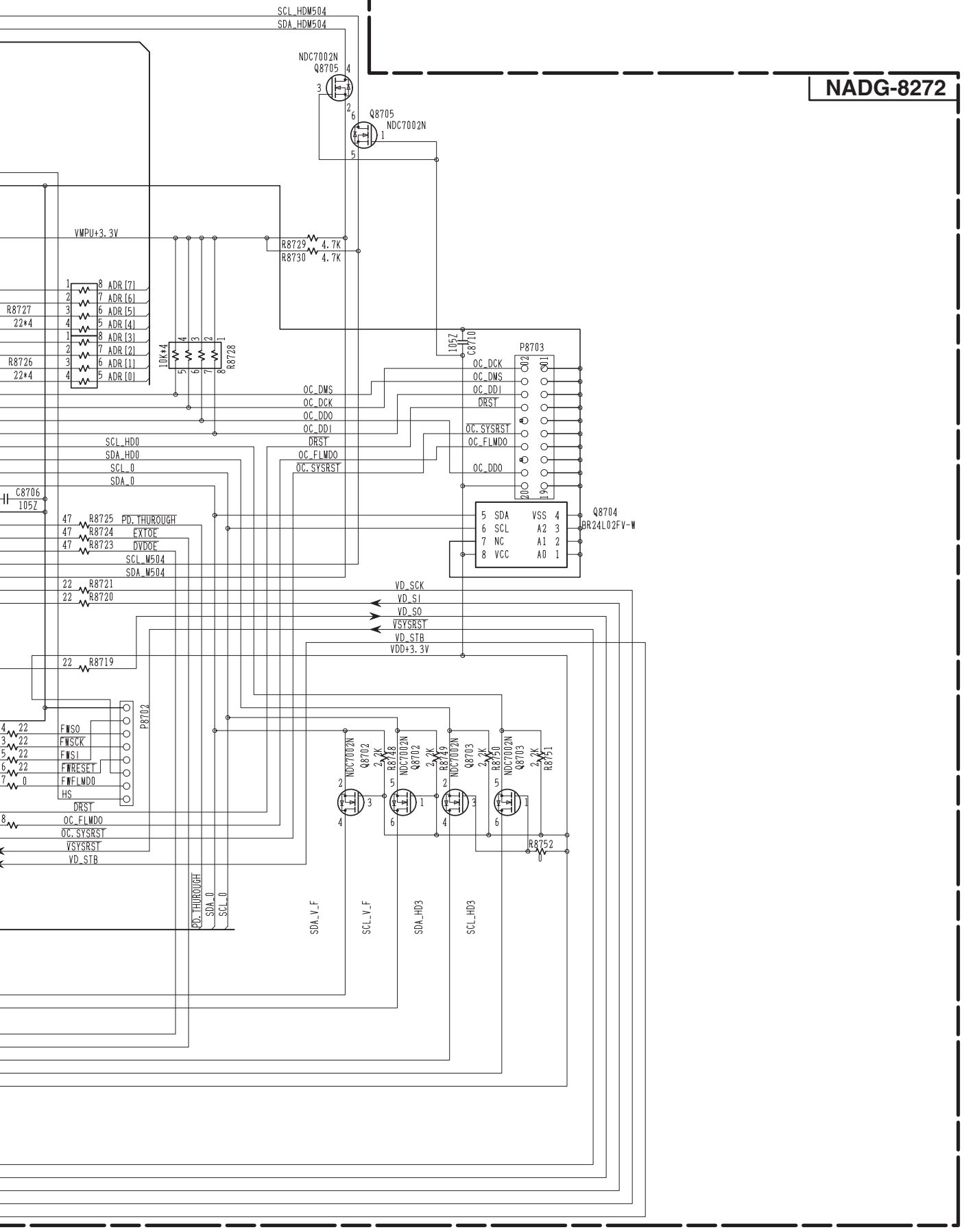

SCHEMATIC DIAGRAM

U01 : DVD MAI

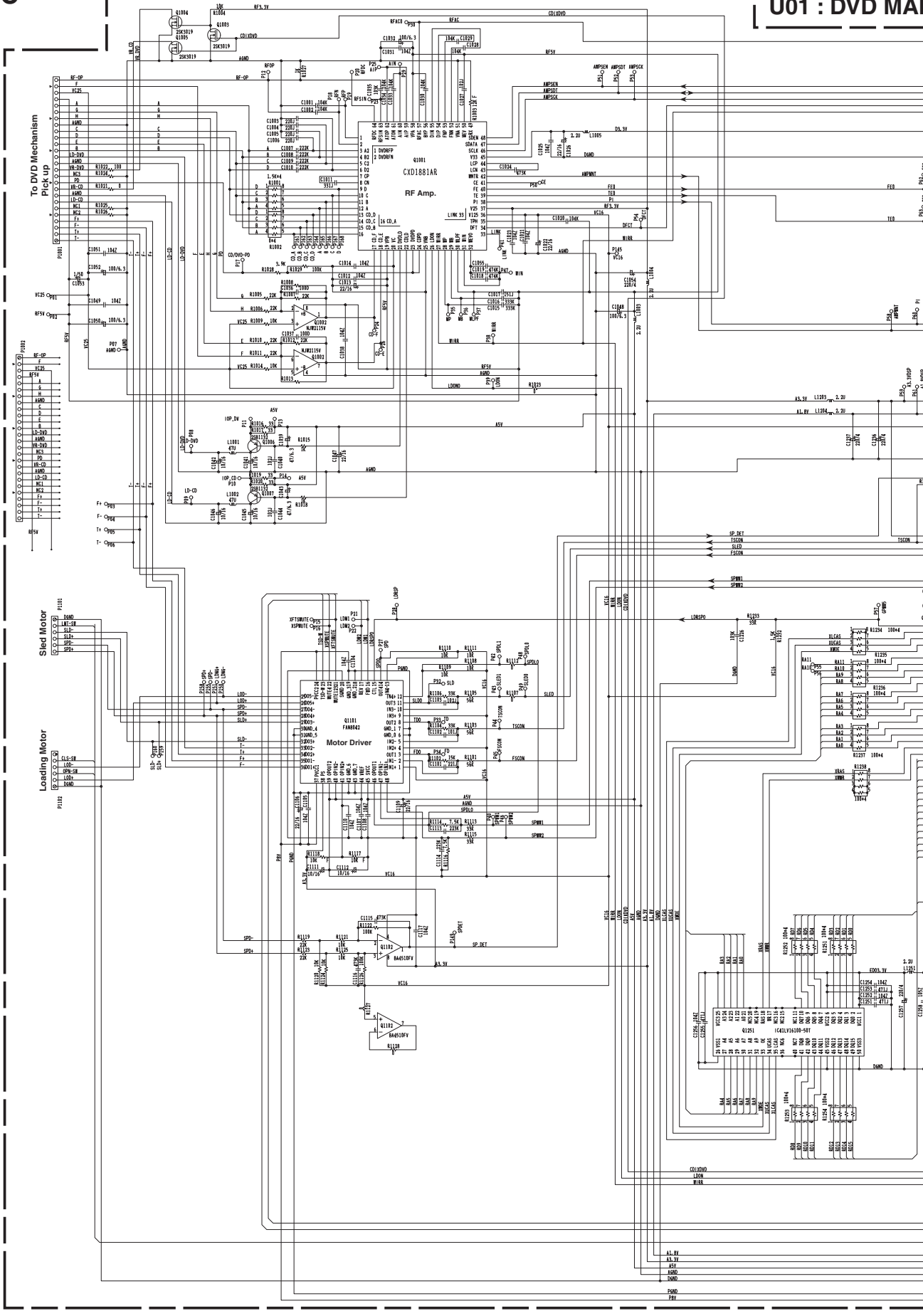

E F G H

AIN BOARD NADG-8257 (1/4) F/E section

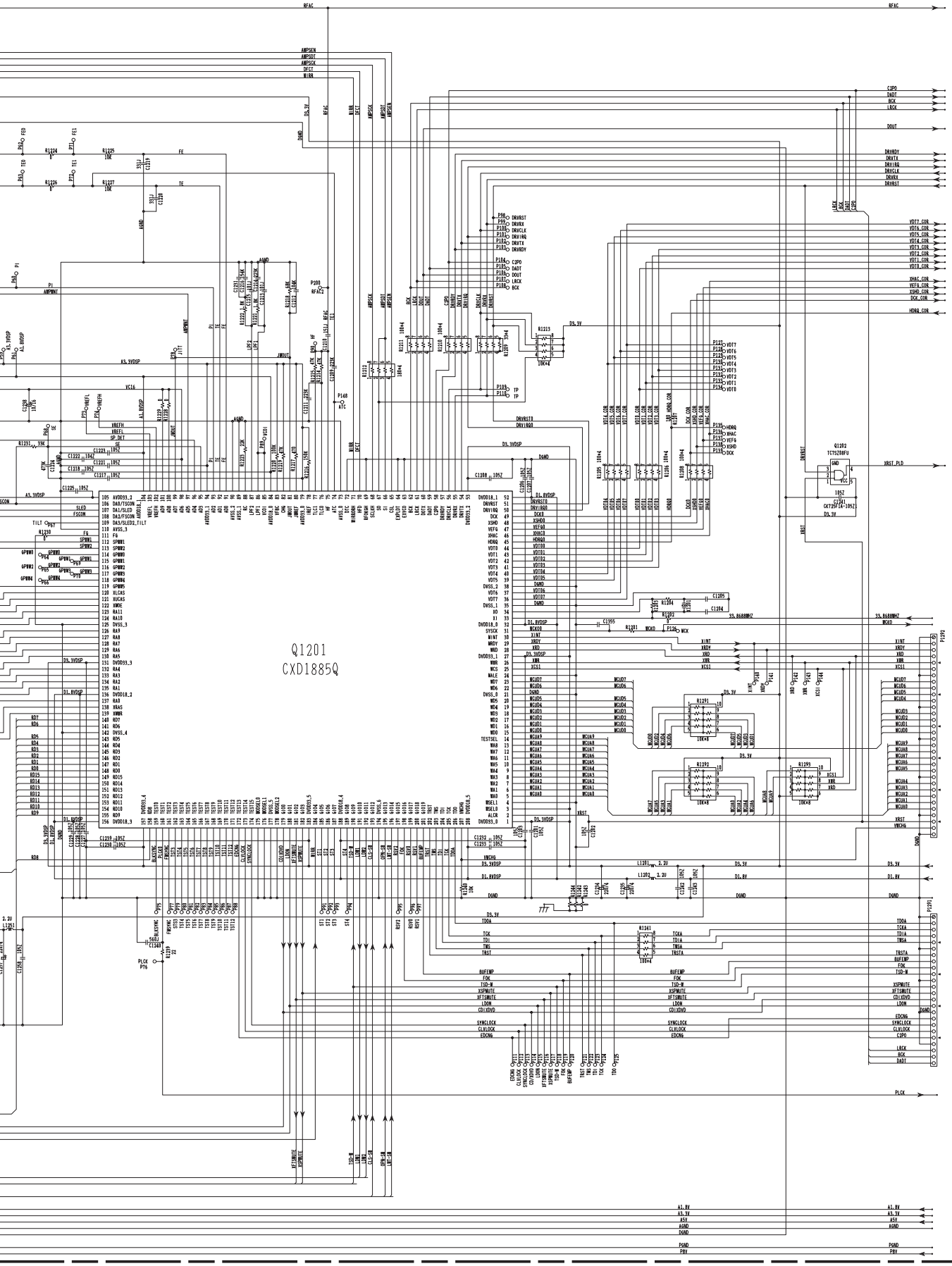

SCHEMATIC DIAGRAM

U01 : DVD MAIN BOARD NADG-8257 (2/4) SACD Section

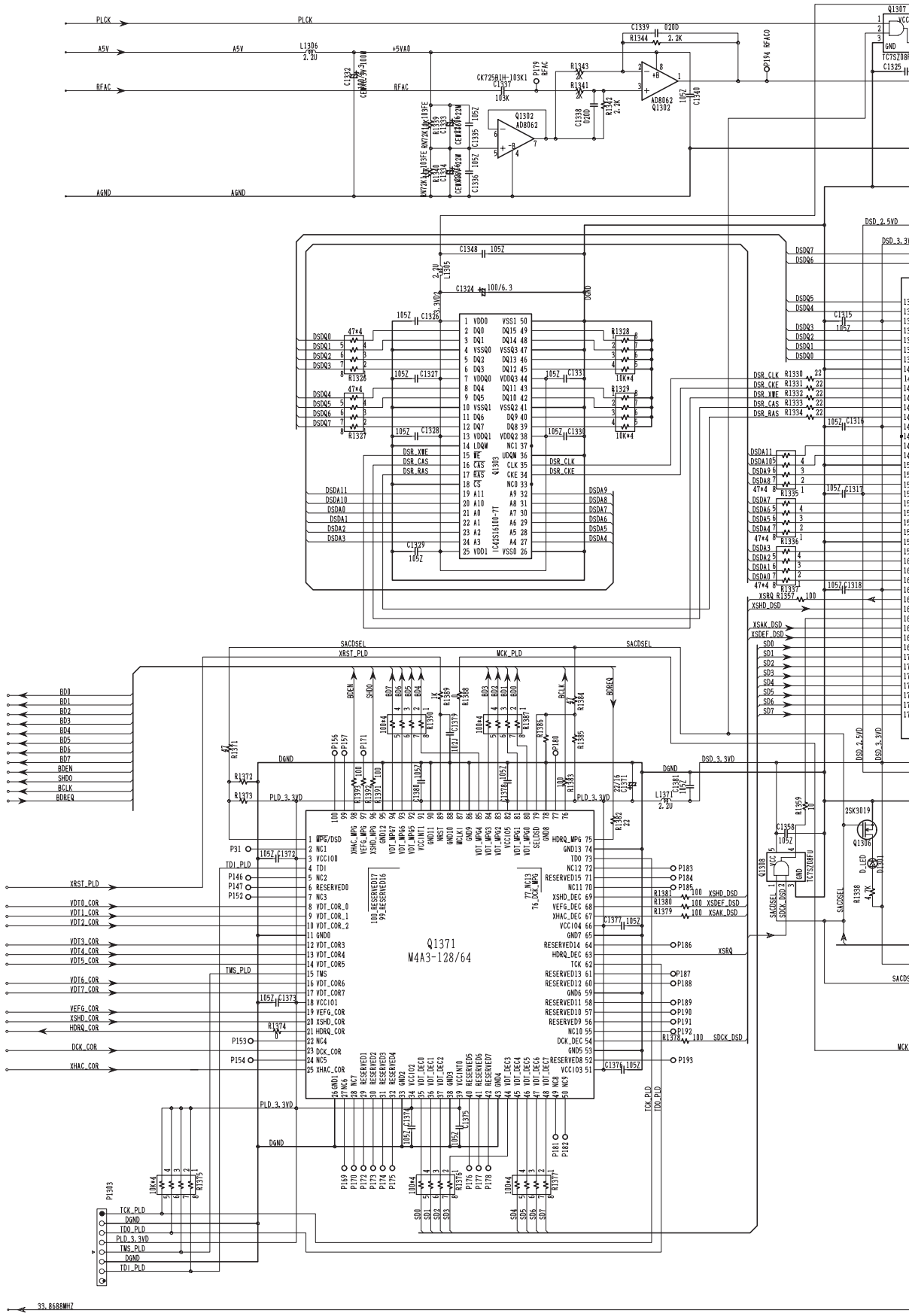

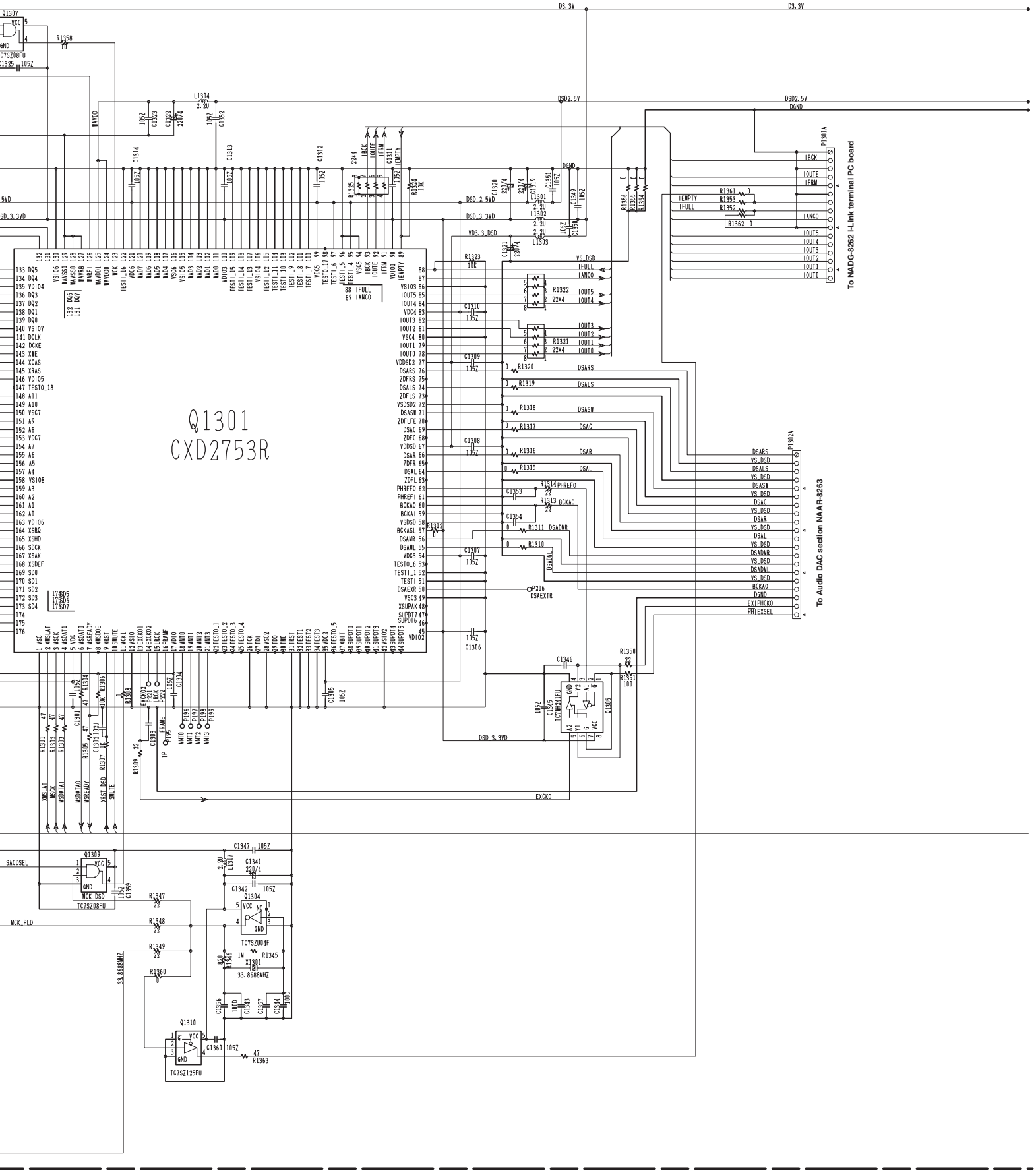
E
F
G
H
Q1301
CXD2753R
To NADG-8262 i-Link terminal PC board
To Audio DAC section NAAR-8263
D3.3V
DSD2.5V
DGND
DSD_3.3VD
VD3.3_DSD
EXCKO
SACDSEL
MCK_PLD
33.8688MHZ
Q1307
Q1309
Q1304
Q1310
Q1305
Q1301
TC7SZ08FU
TC7SZ04F
TC7SZ125FU
TC7MH241FU
P1301A
P1302A

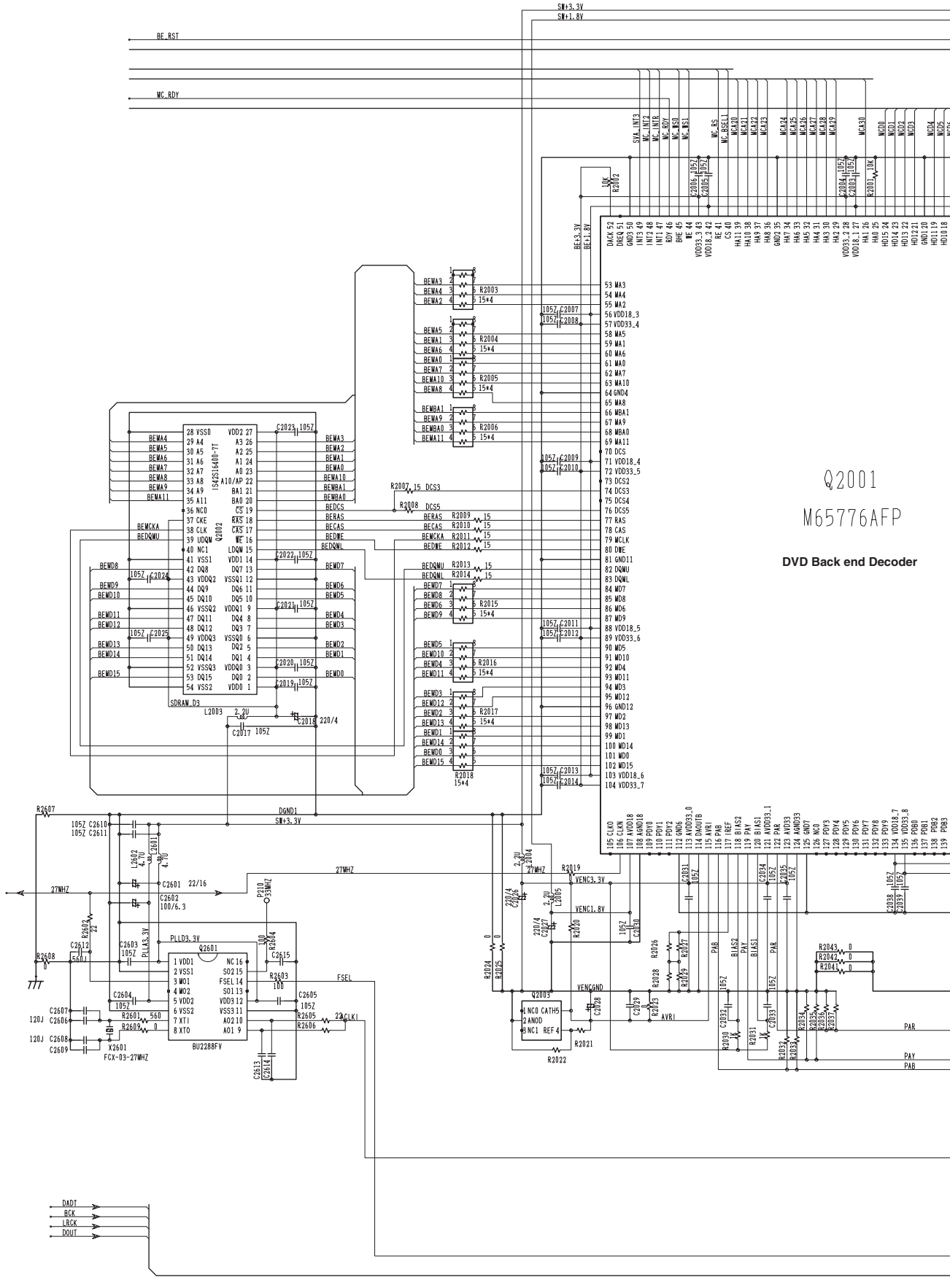
Q2001
M65776AFP
DVD Back end Decoder
SDRAM_D3
BU2288FV
FCX-03-27MHZ

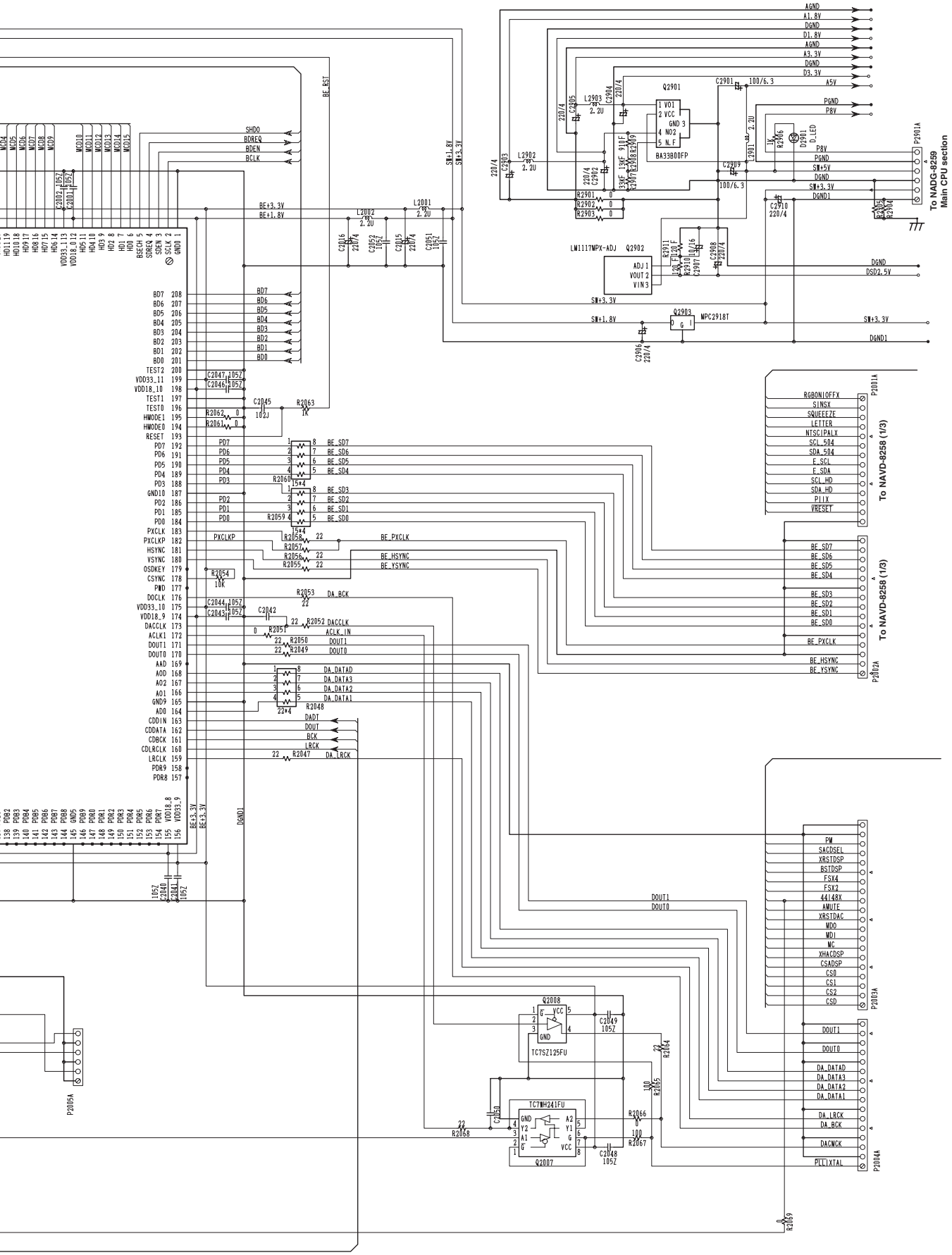
To NADG-9259
Main CPU section
To NAVD-8258 (1/3)
To NAVD-8258 (1/3)
BA33B00FP
LM1117MPX-ADJ
NPC2918T
TC7SZ125FU
TC7WH241FU

SCHEMATIC DIAGRAM

U01 : DVD MAIN BOARD NADG-8257 (4/4) MPU section

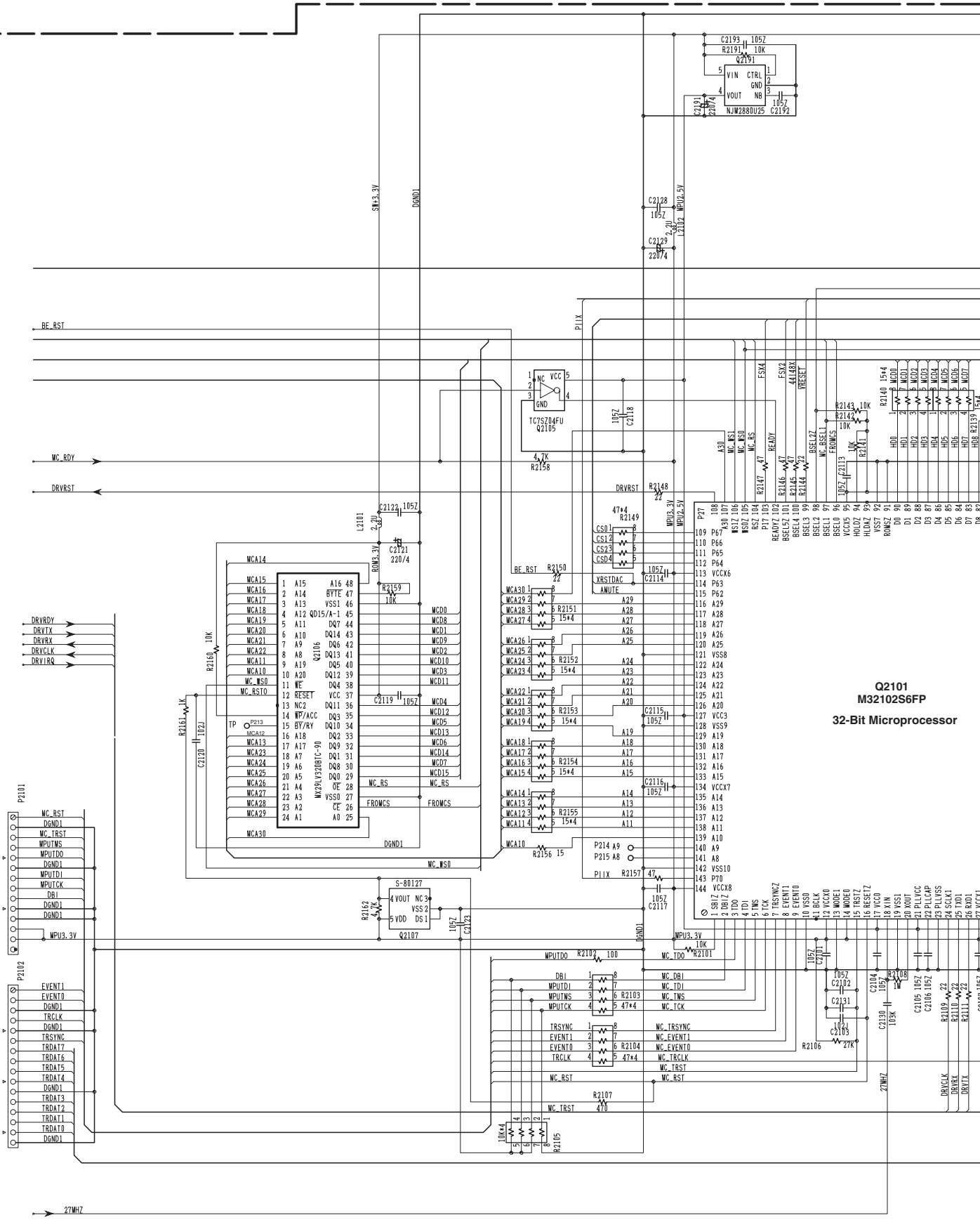

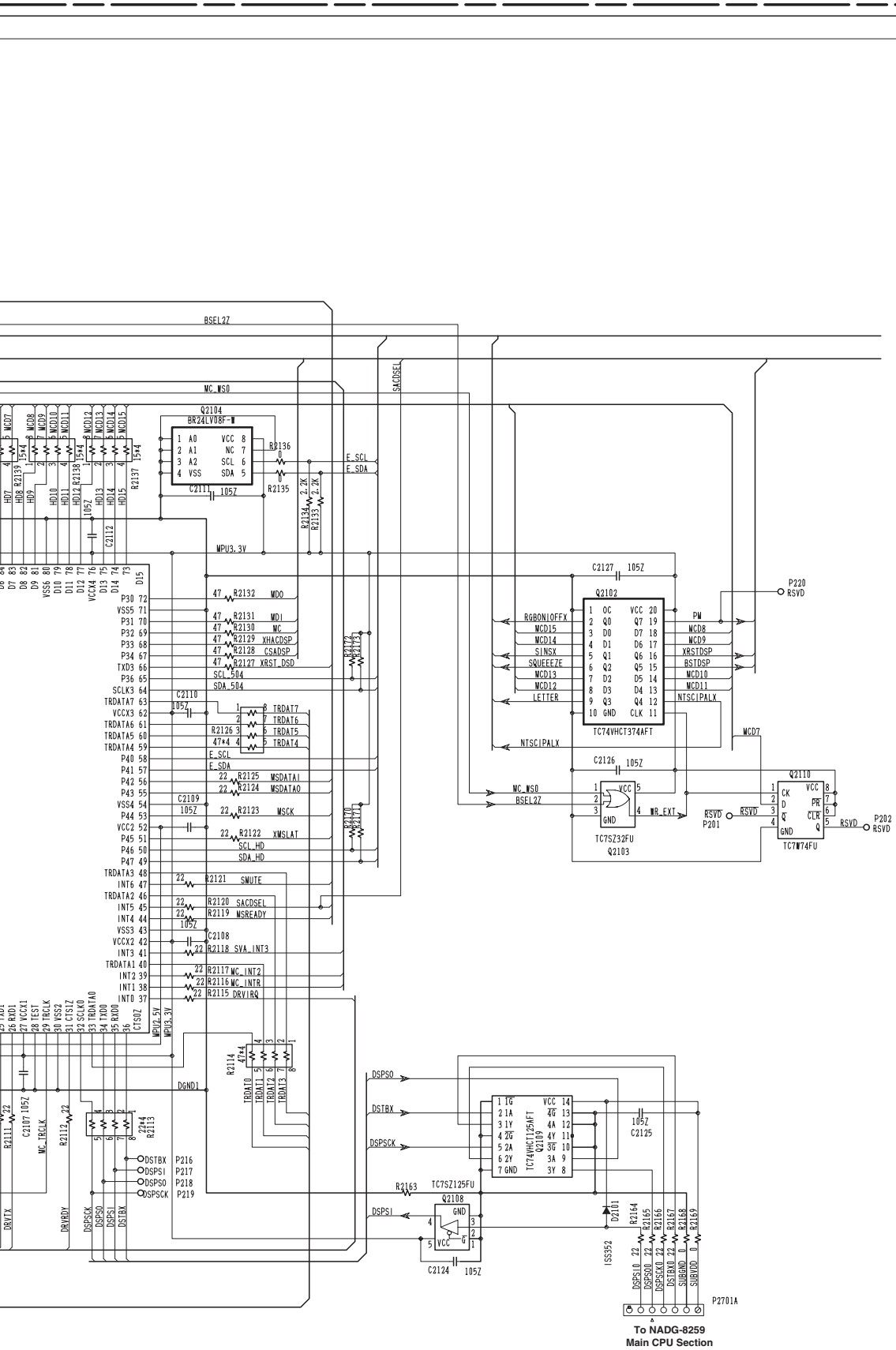
DGND1
SW+3.3V
BSEL2Z
MC_WS0
SACDSEL
Q2104
BR24LV08F-W
F_SCL
F_SDA
WPU3.3V
Q2102
TC74VHCT374AFT
RGBONIOFFX
SINSX
SQUEEEZE
LETTER
PW
XRSTDSP
BSTDSP
NTSCIPALX
P220
RSVD
Q2110
TC7W74FU
Q2103
TC7SZ32FU
MR_EXT
P201
P202
MSDATA1
MSDATA0
MSCK
XMSLAT
SCL_HD
SDA_HD
SMUTE
SACDSEL
MSREADY
SVA_INT3
MC_INT2
MC_INTR
DRVIRQ
TRDAT7
TRDAT6
TRDAT5
TRDAT4
XHACDSP
CSADSP
XRST_DSD
SCL_504
SDA_504
DSPSO
DSTBX
DSPSCK
DSPSI
Q2109
TC74VHCT125AFT
Q2108
TC7SZ125FU
D2101
1SS352
P2701A
To NADG-8259
Main CPU Section

SCHEMATIC DIAGRAM

U70: POWER SUPPLY UNIT (NGPS-0036-100-120V Only <DC1N>)
(NGPS-0037-100-240V Except <DC1N>)

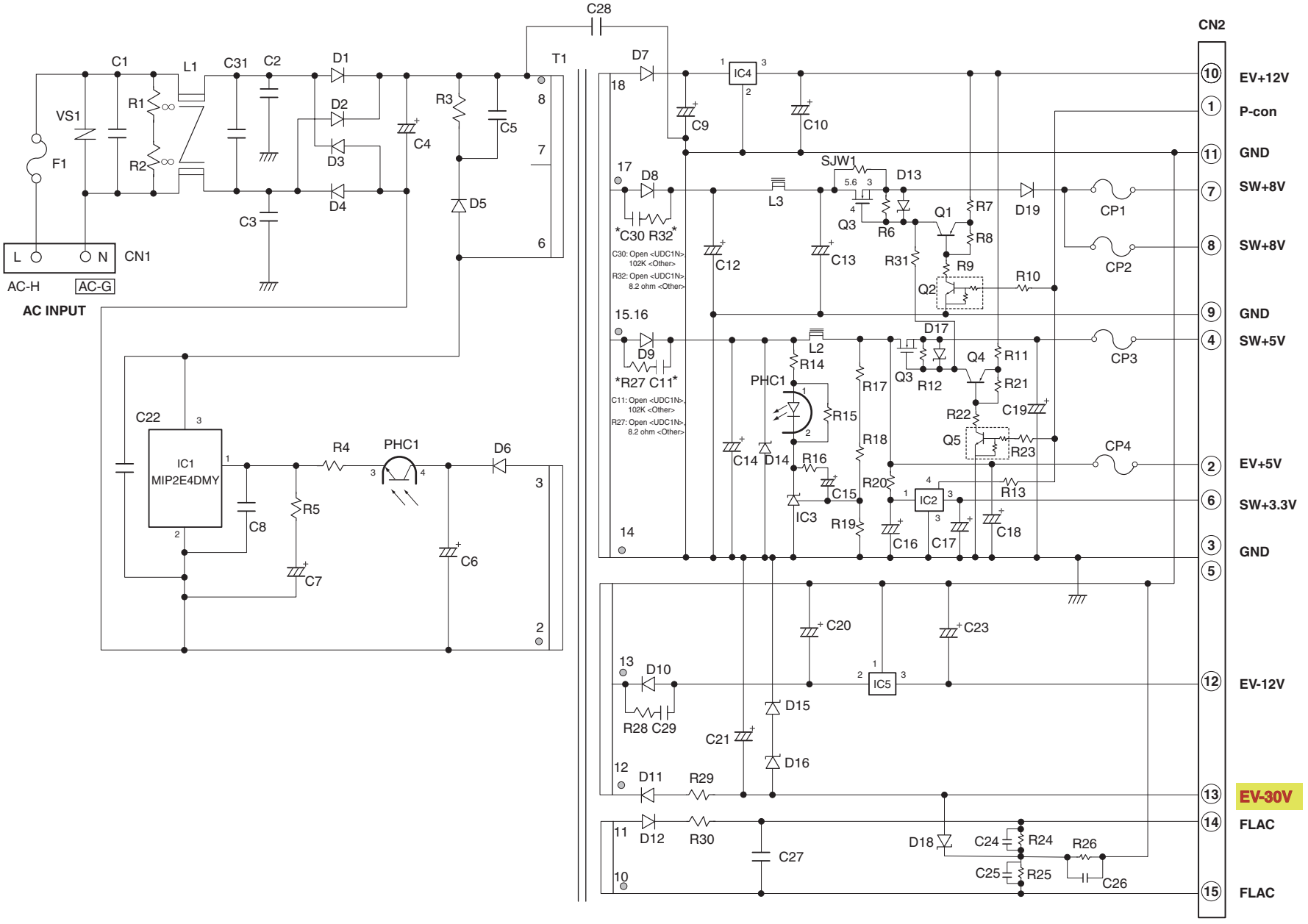

PRINTED CIRCUIT BOARD VIEW

U01 : DVD MAIN PC BOARD NADG-8257

A-side pattern and A-side silk

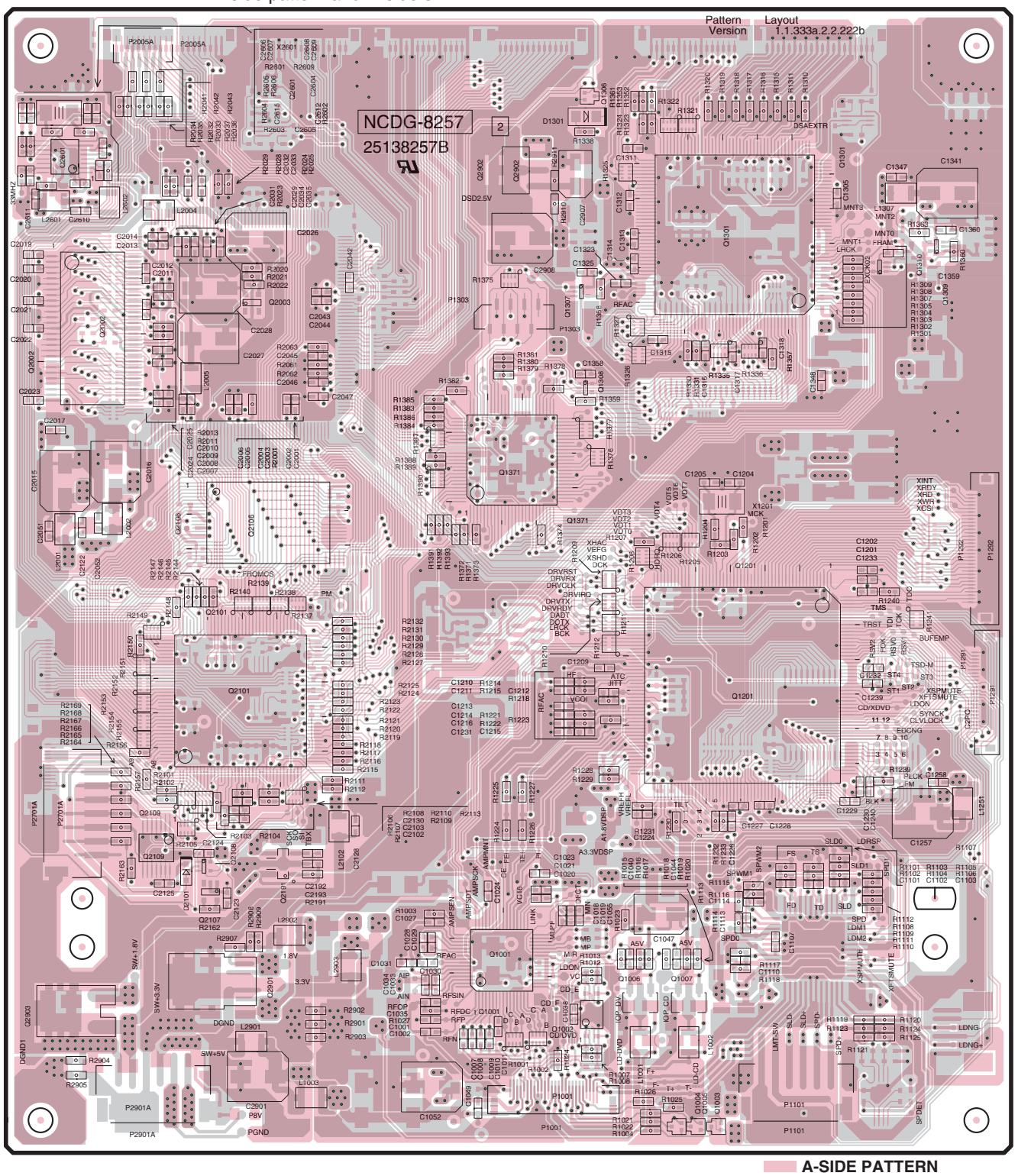

PRINTED CIRCUIT BOARD VIEW

U01 : DVD MAIN PC BOARD NADG-8257

B-side pattern and B-side silk

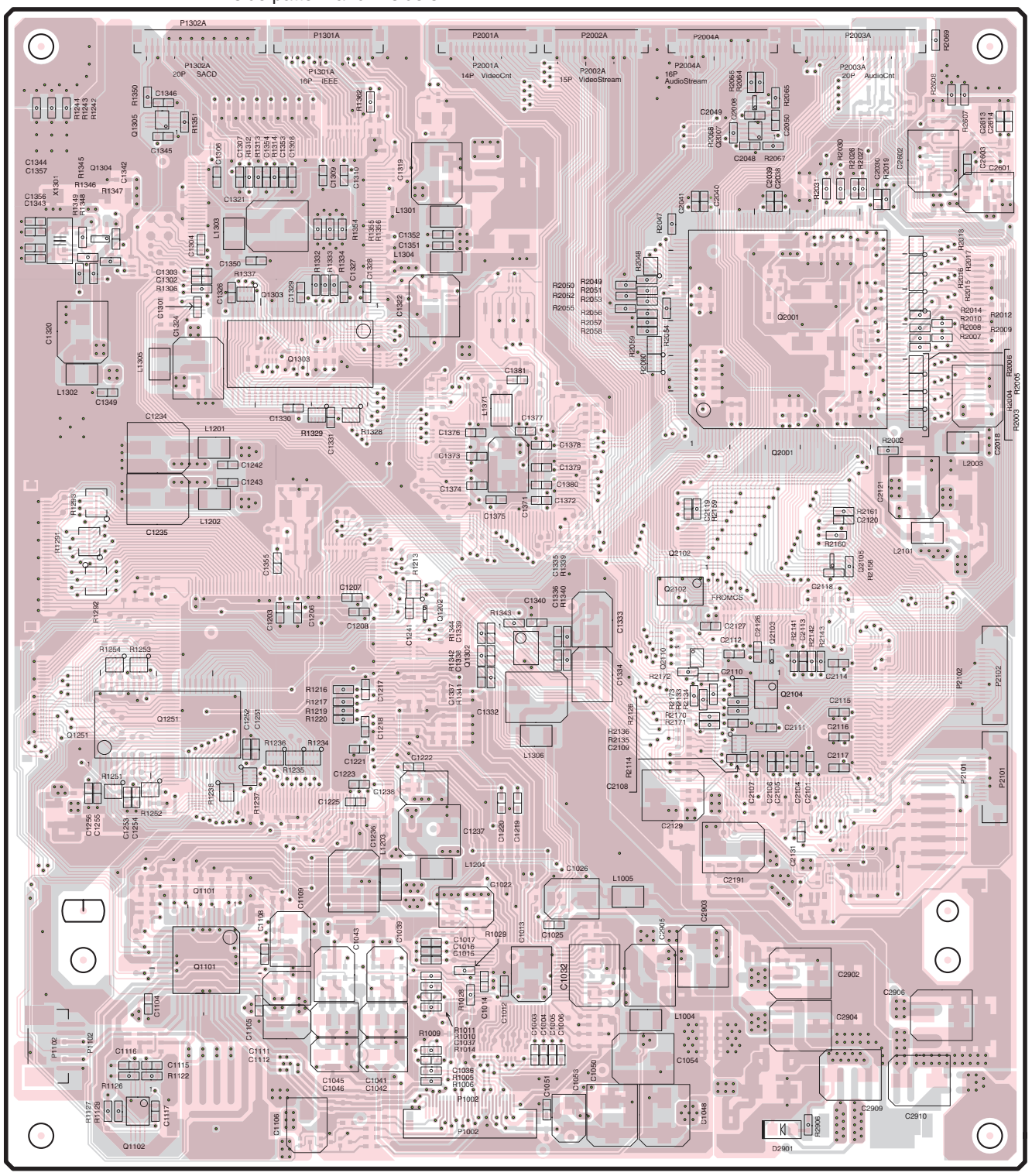

PRINTED CIRCUIT BOARD VIEW

U13 DIGITAL VIDEO PROCESSOR PC BOARD NADG-82

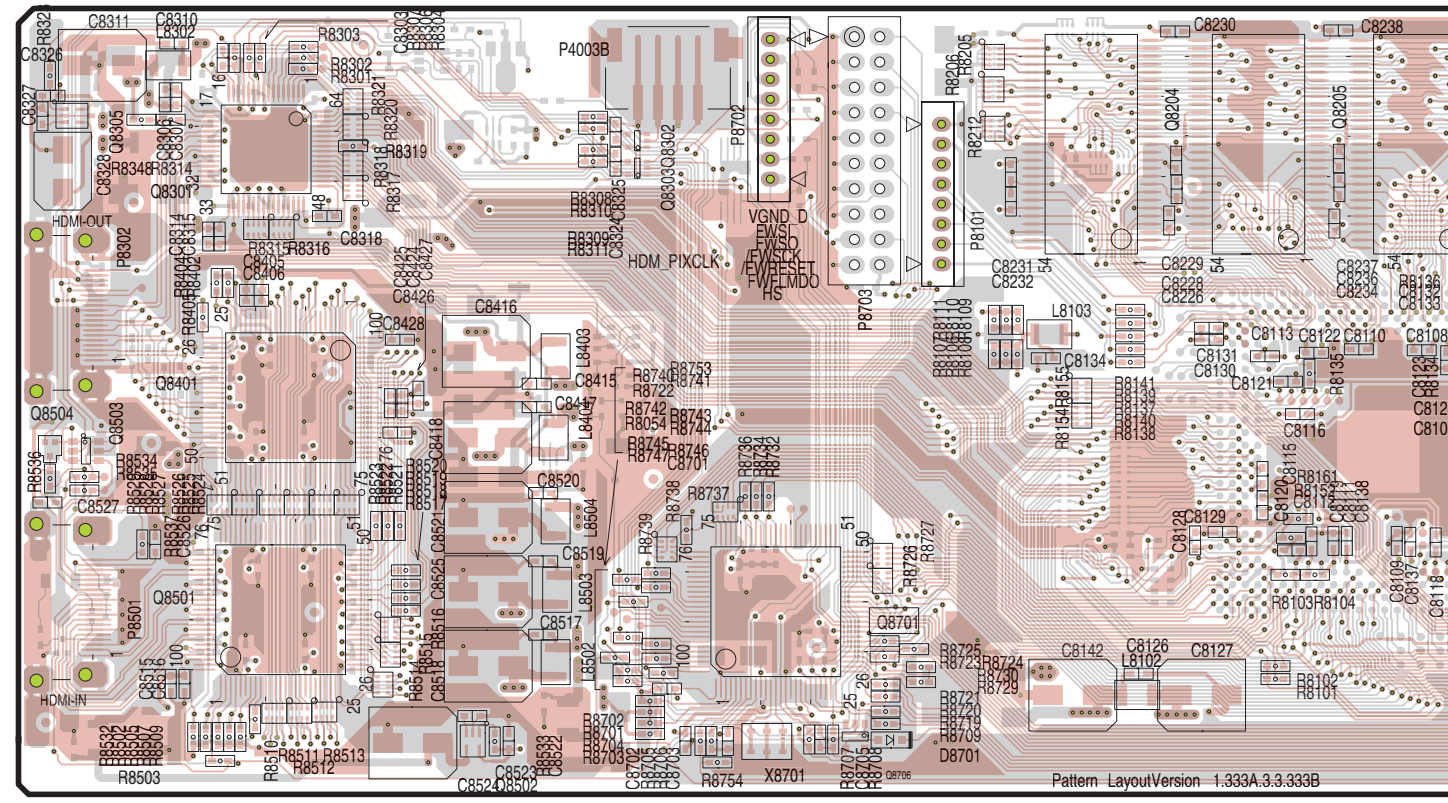

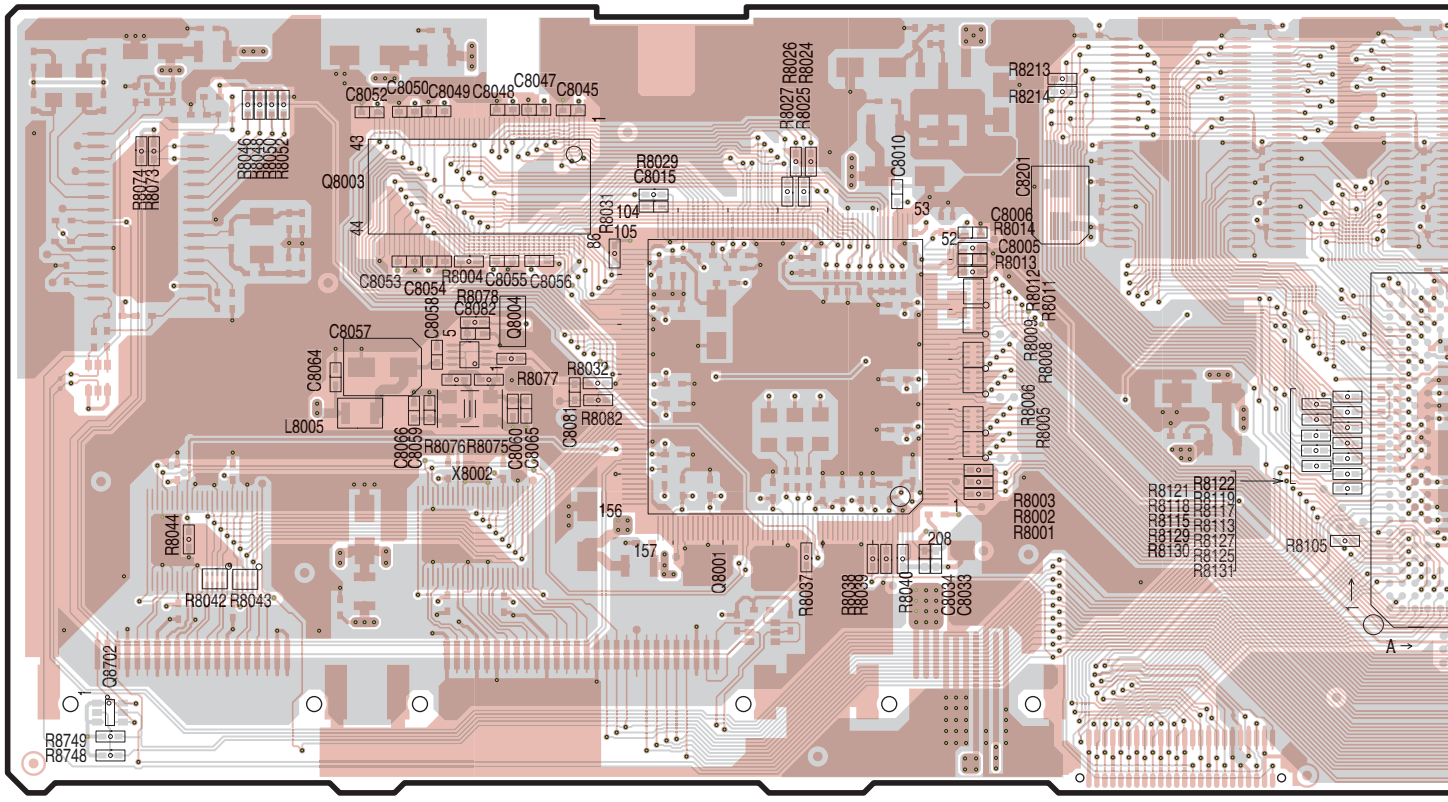

E F G H

-8272

A-SIDE VIEW

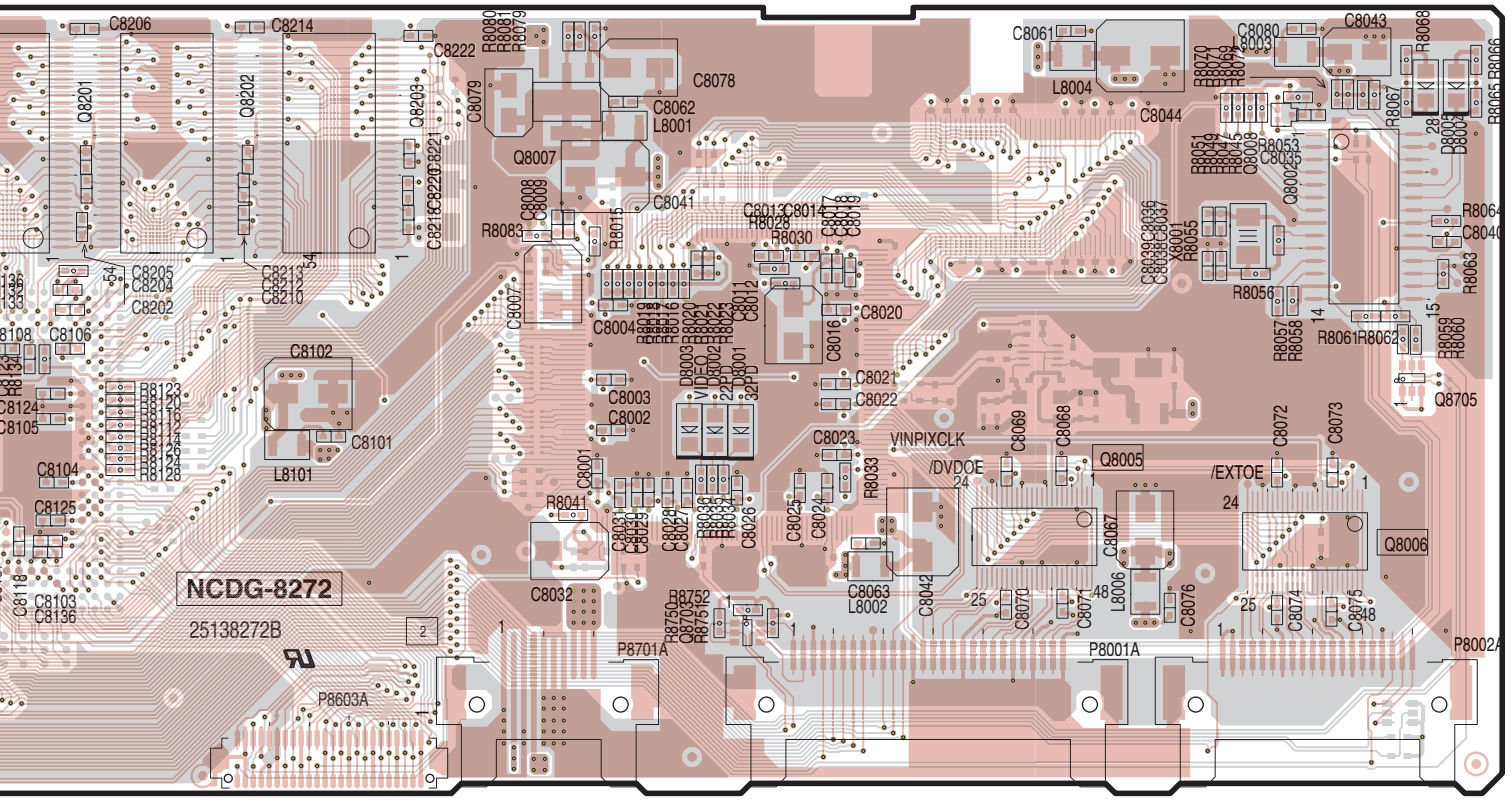

B-SIDE VIEW

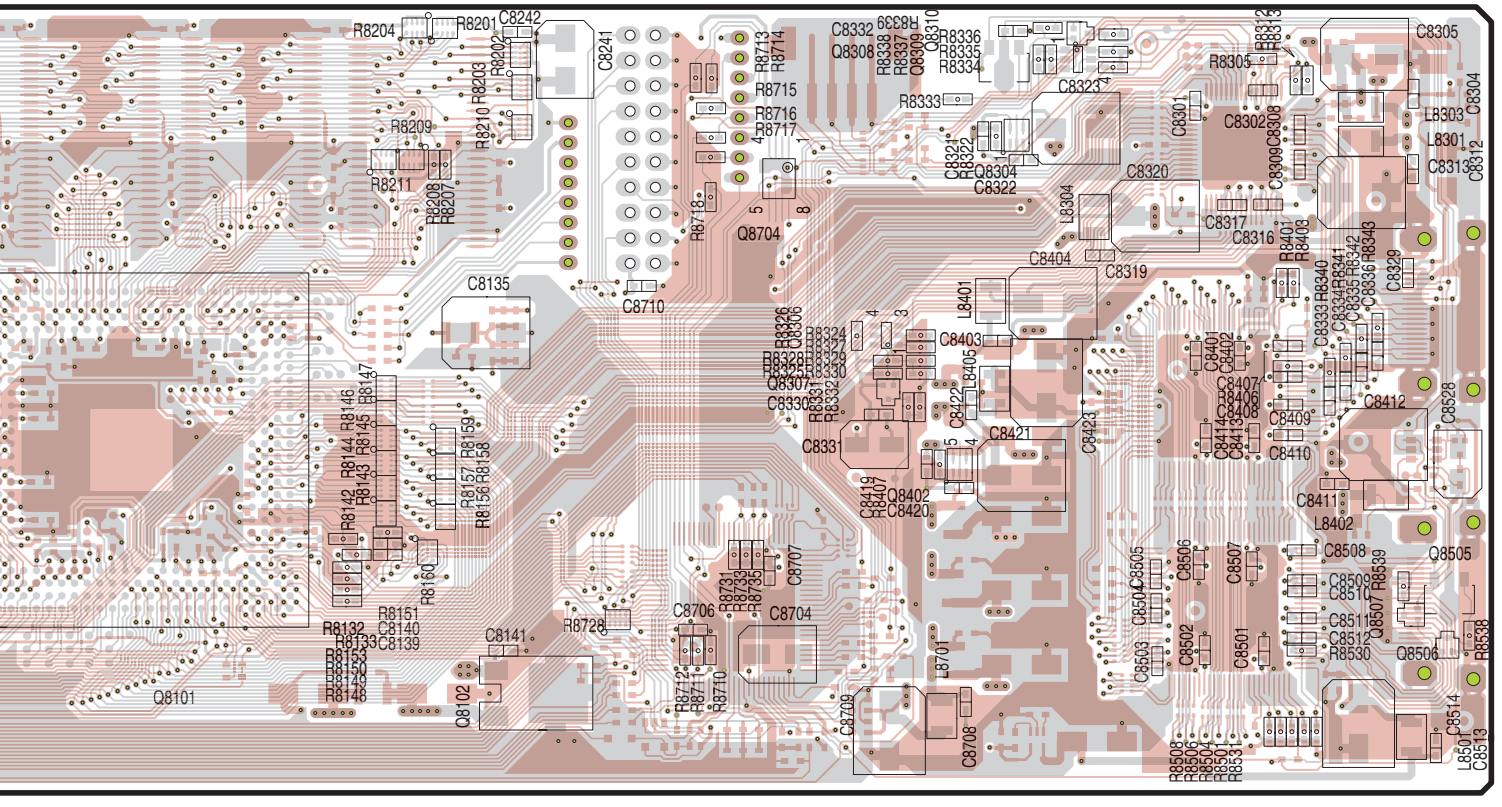

PRINTED CIRCUIT BOARD VIEW

U09 : AUDIO OUTPUT PC BOARD NAAF-8266

A-SIDE VIEW

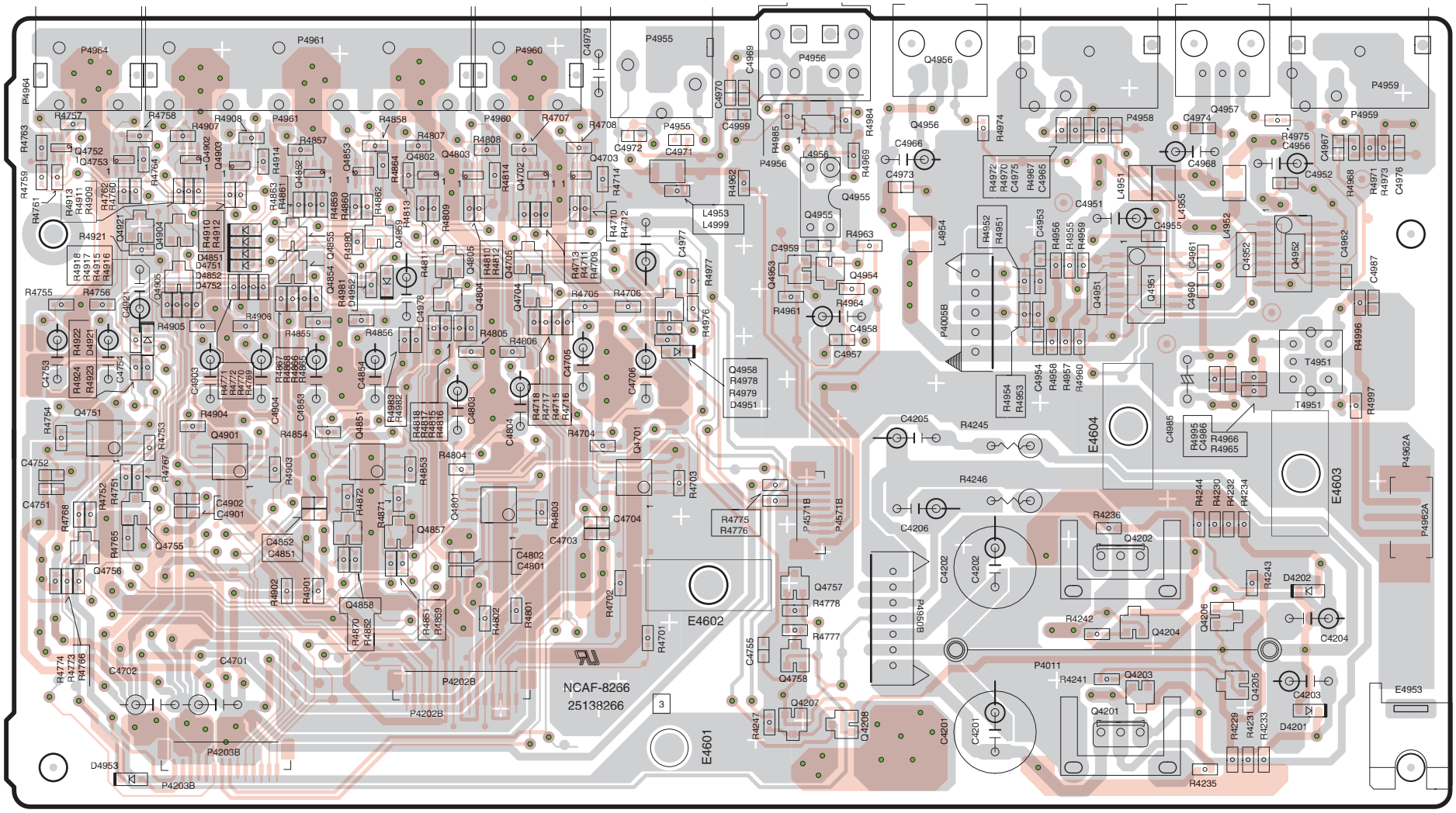

PRINTED CIRCUIT BOARD VIEW

U09 : AUDIO OUTPUT PC BOARD NAAF-8266

B-SIDE VIEW

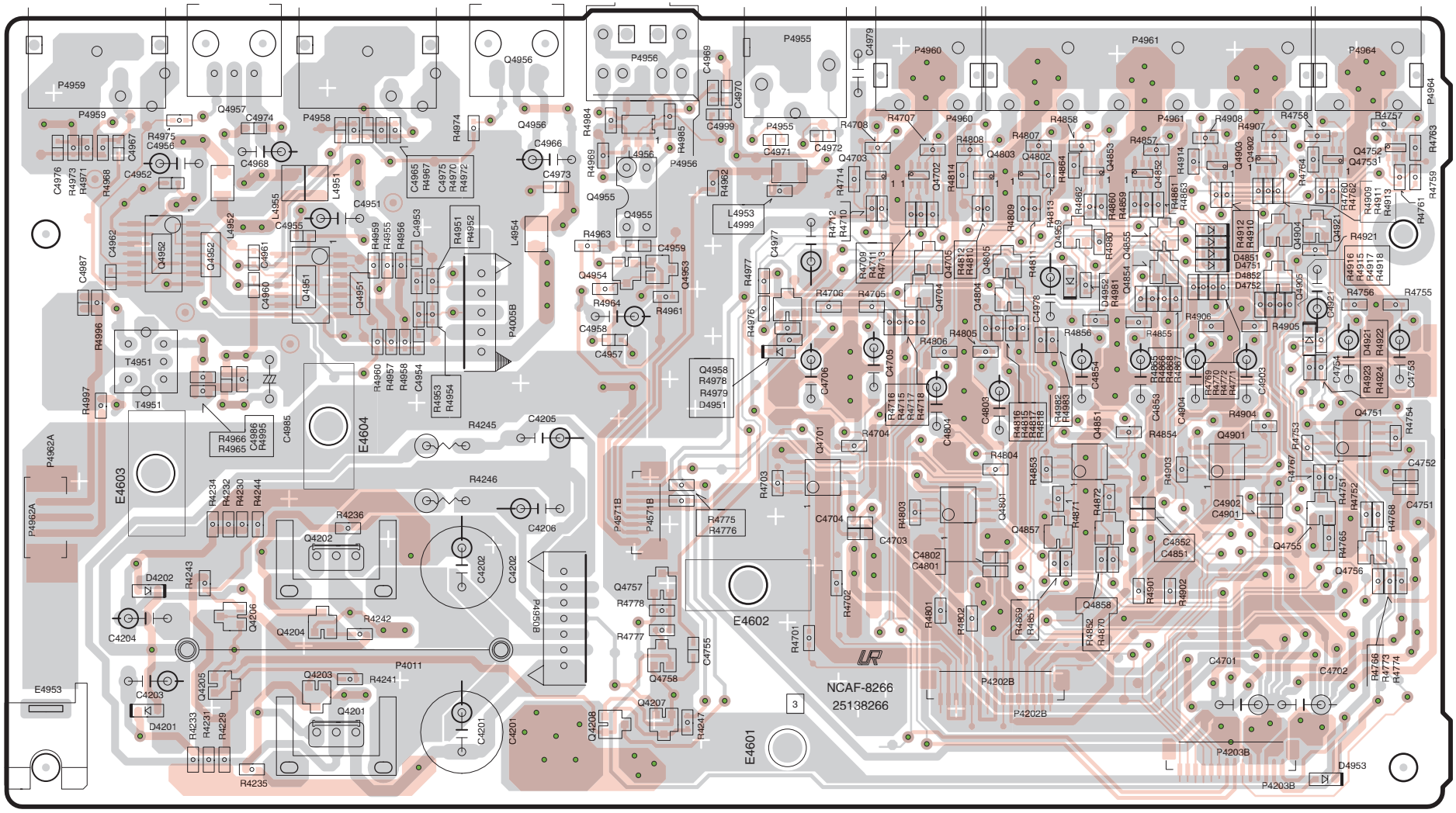

A B C D

1 2 3 4 5

PRINTED CIRCUIT BOARD VIEW

U18 : AUDIO DAC PC BOARD NAAR-8263

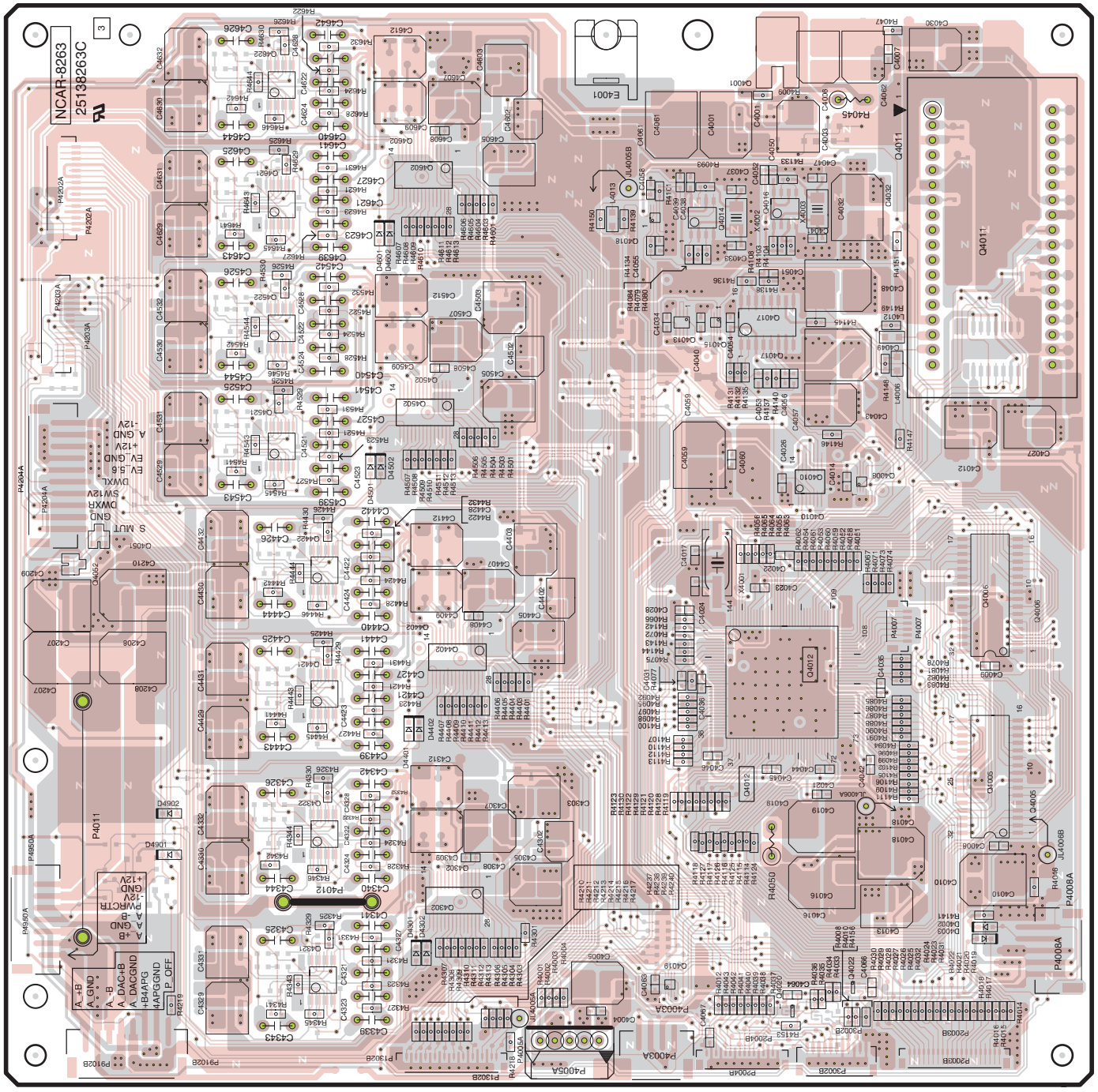

A B C D

1 2 3 4 5

PRINTED CIRCUIT BOARD VIEW

U18 : AUDIO DAC PC BOARD NAAR-8263

B-SIDE VIEW

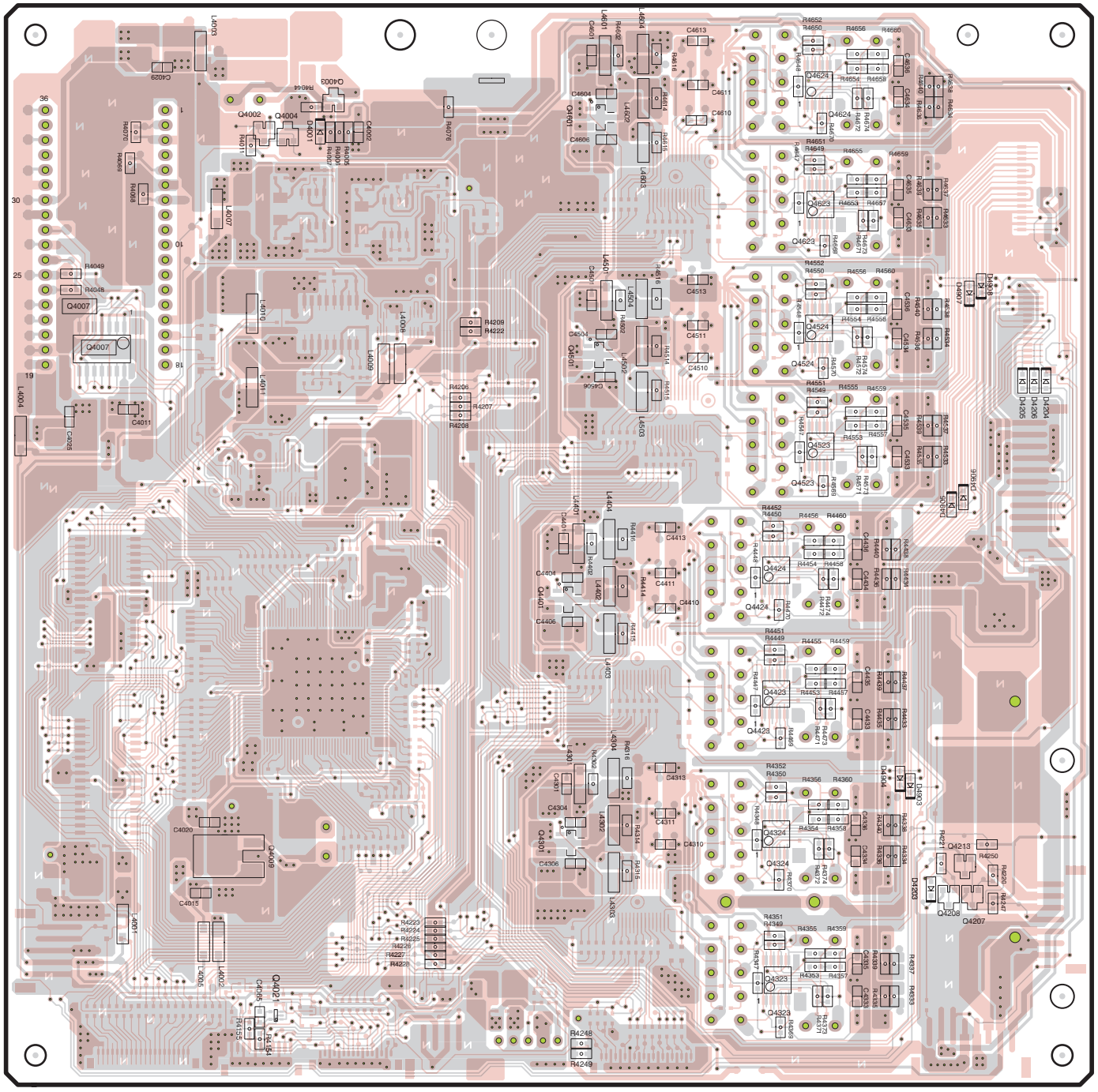

A-SIDE PATTERN
B-SIDE PATTERN

PRINTED CIRCUIT BOARD VIEW

U03 DVD MAIN CPU PC BOARD NADG-8259

A-SIDE

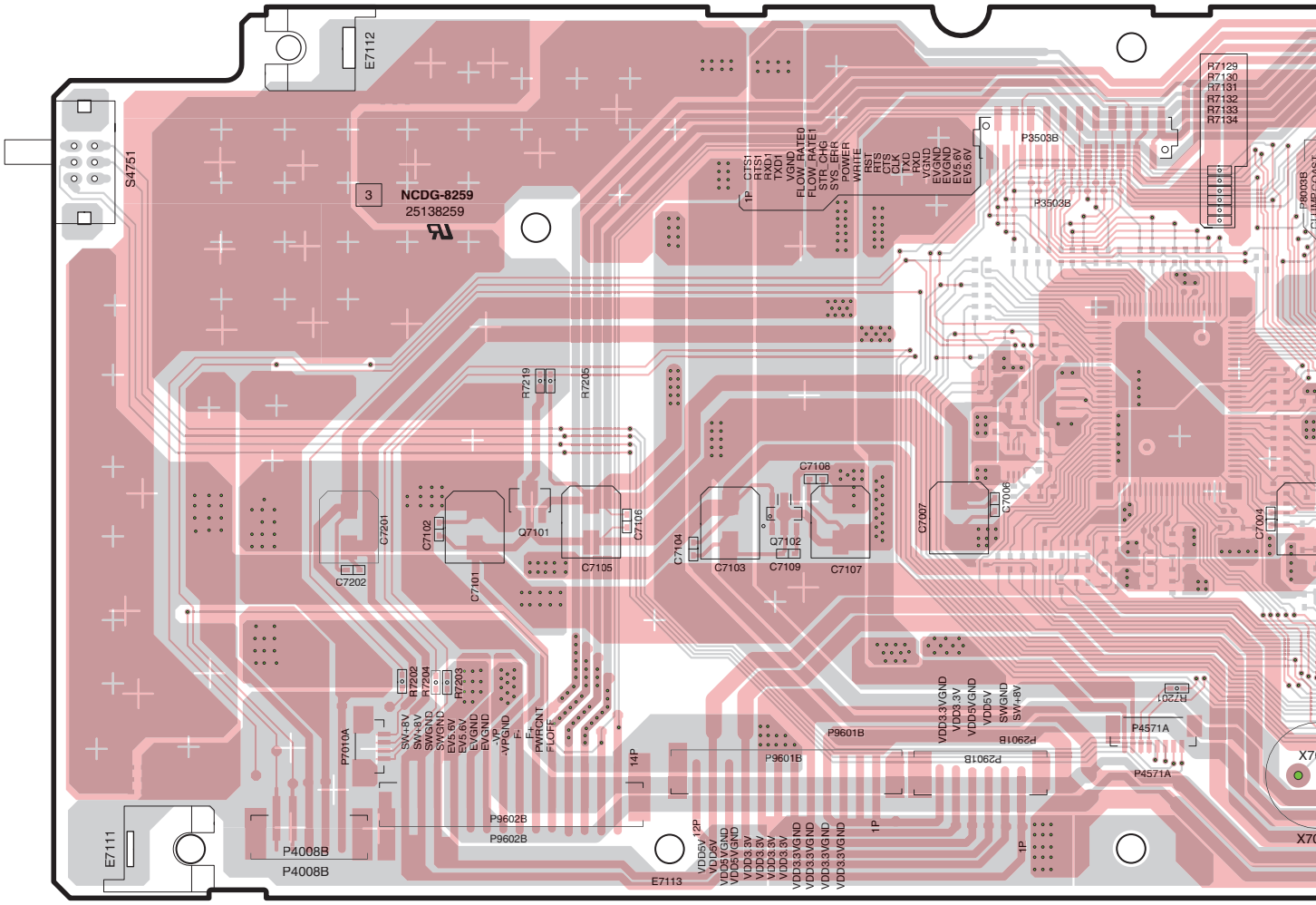

E F G H

IDE VIEW

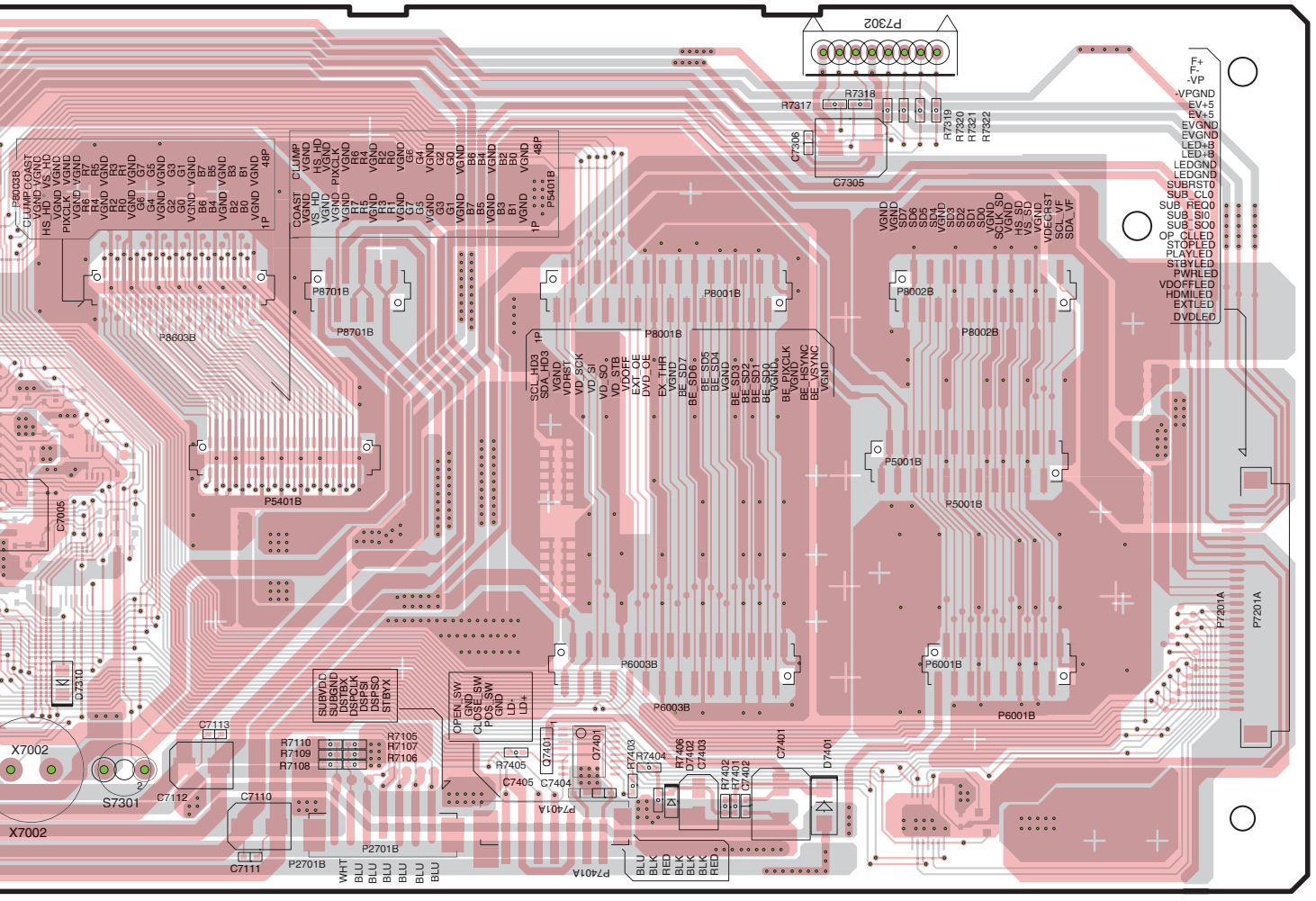

A-SIDE PATTERN

B-SIDE PATTERN

PRINTED CIRCUIT BOARD VIEW

U03 DVD MAIN CPU PC BOARD NADG-8259

FROM B-SIDE

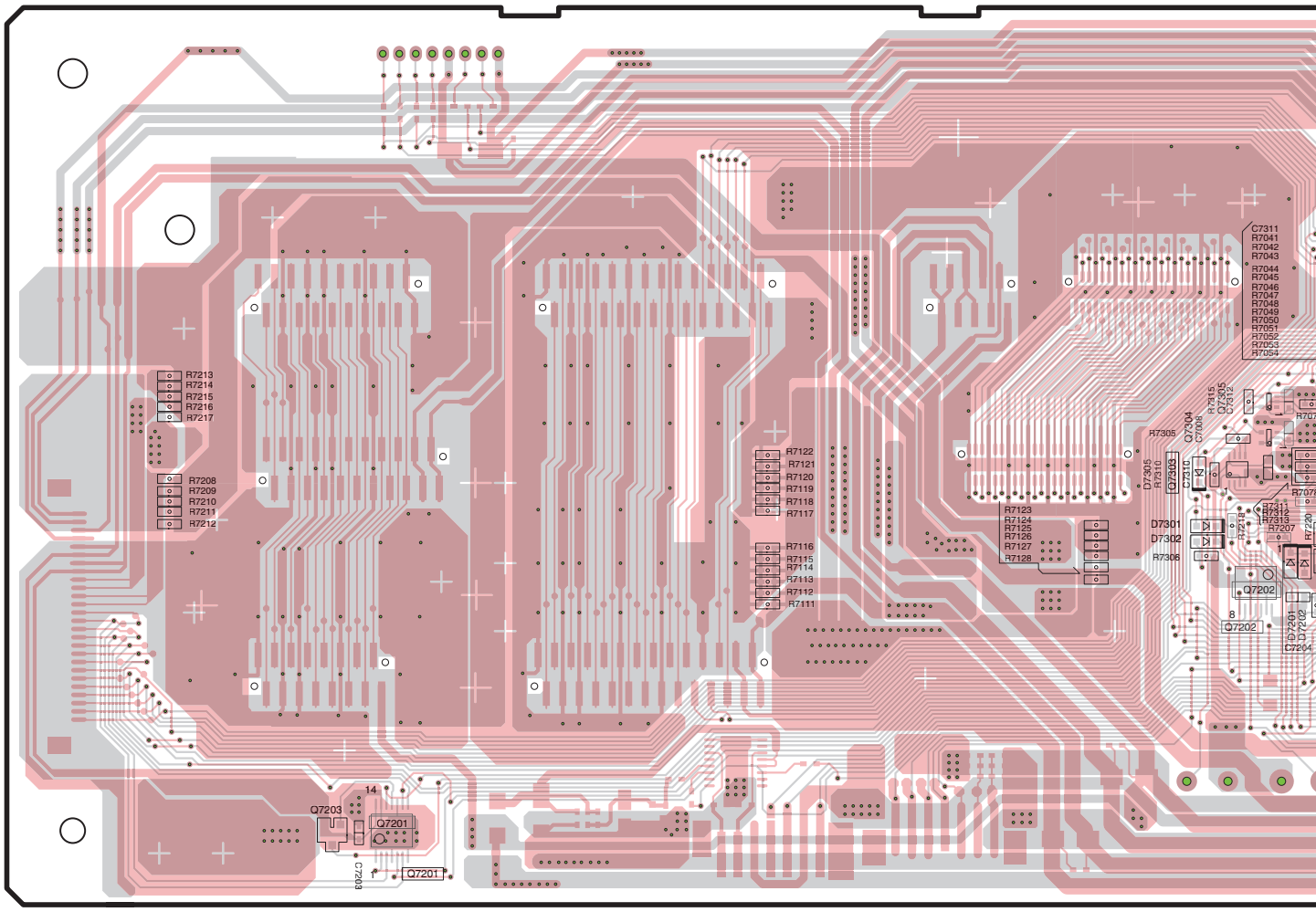

E F G H

DE VIEW

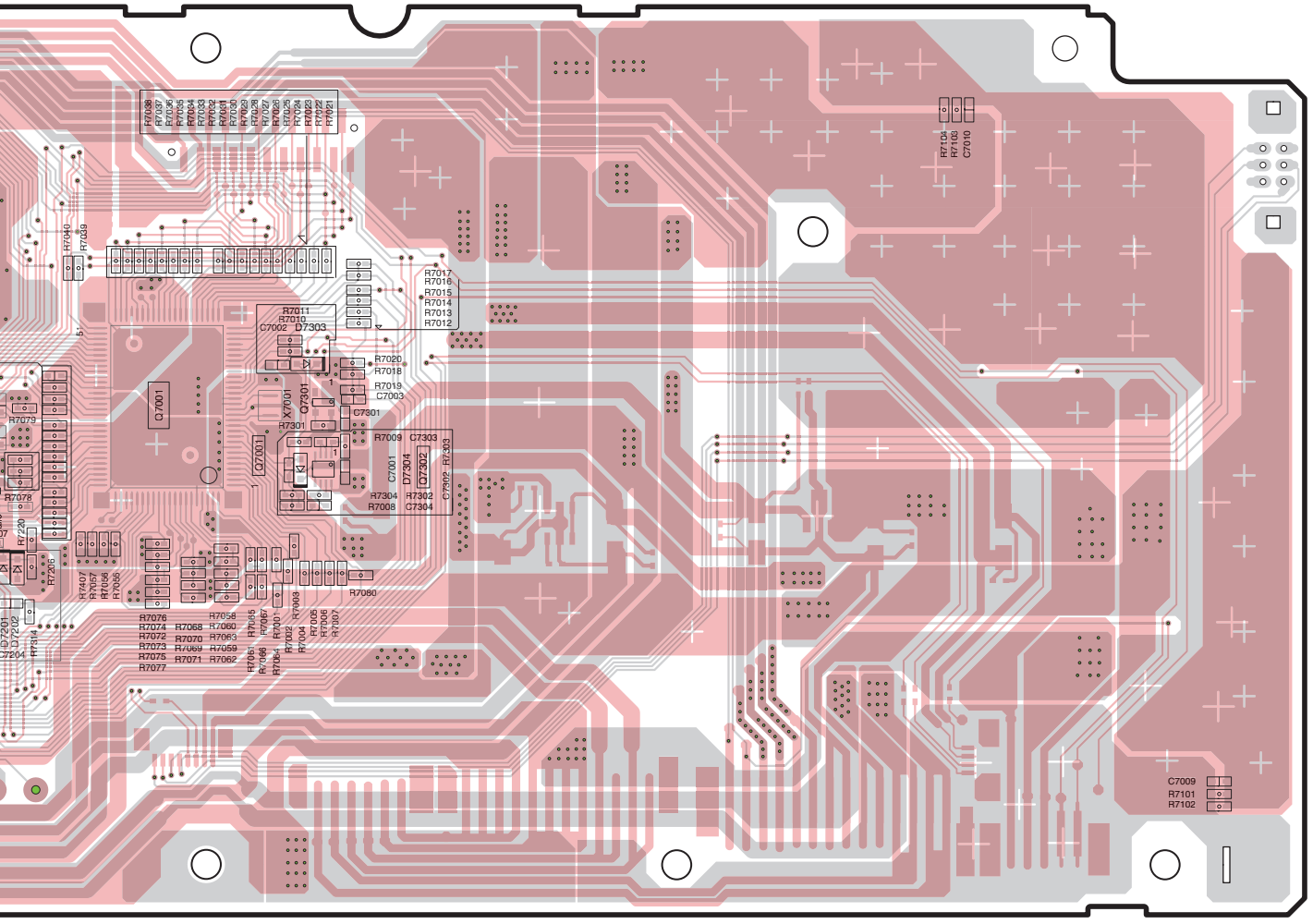

A-SIDE PATTERN

B-SIDE PATTERN

PRINTED CIRCUIT BOARD VIEW

U20

IEEE1394 TERMINAL PC BOARD
NADG-8262

EXCEPT <GR6P>

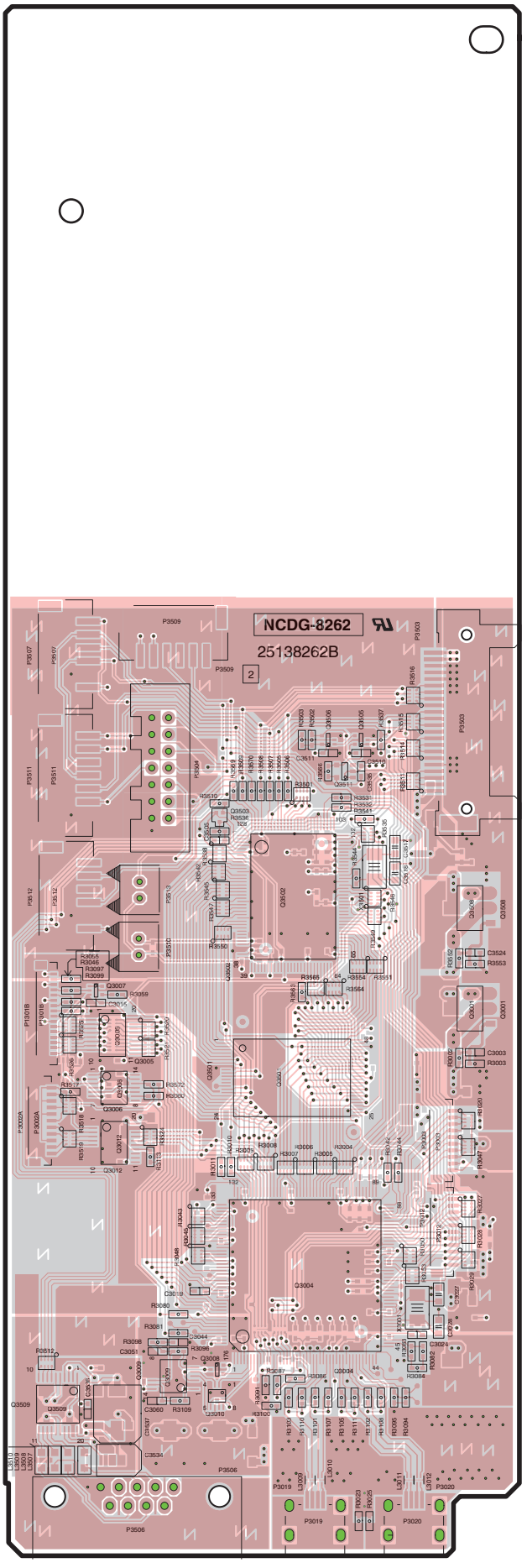

FROM A-SIDE VIEW

A-SIDE PATTERN
B-SIDE PATTERN

PRINTED CIRCUIT BOARD VIEW

U20

IEEE1394 TERMINAL PC BOARD NADG-8262

EXCEPT <GR6P>

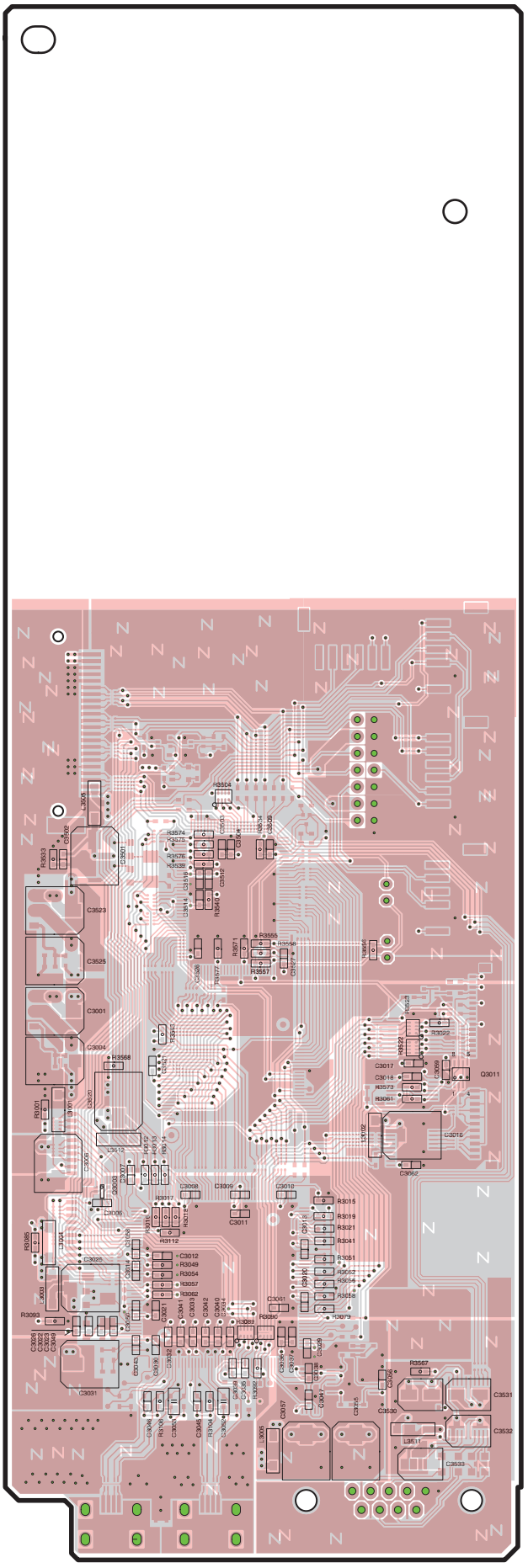

FROM B-SIDE VIEW

A-SIDE PATTERN

B-SIDE PATTERN

PRINTED CIRCUIT BOARD VIEW

U19

IEEE1394 TERMINAL PC BOARD NADG-8468

ONLY <GR6P>

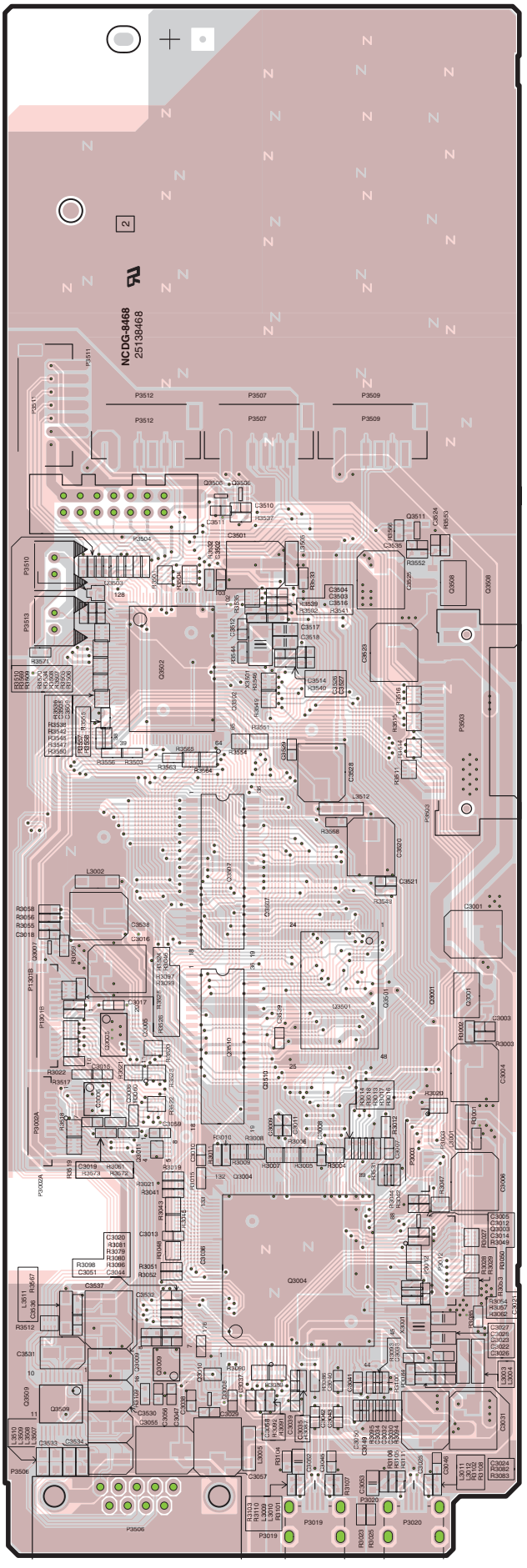

FROM A-SIDE VIEW

A-SIDE PATTERN
B-SIDE PATTERN

PRINTED CIRCUIT BOARD VIEW

U07 **DISPLAY PC BOARD NADIS-8264**

A-SIDE VIEW

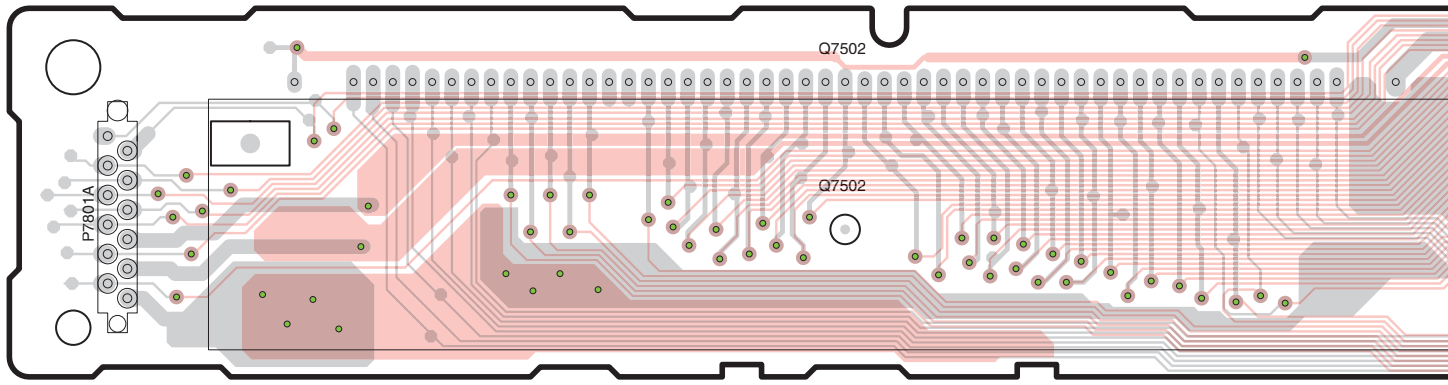

A-SIDE
B-SIDE

E F G H

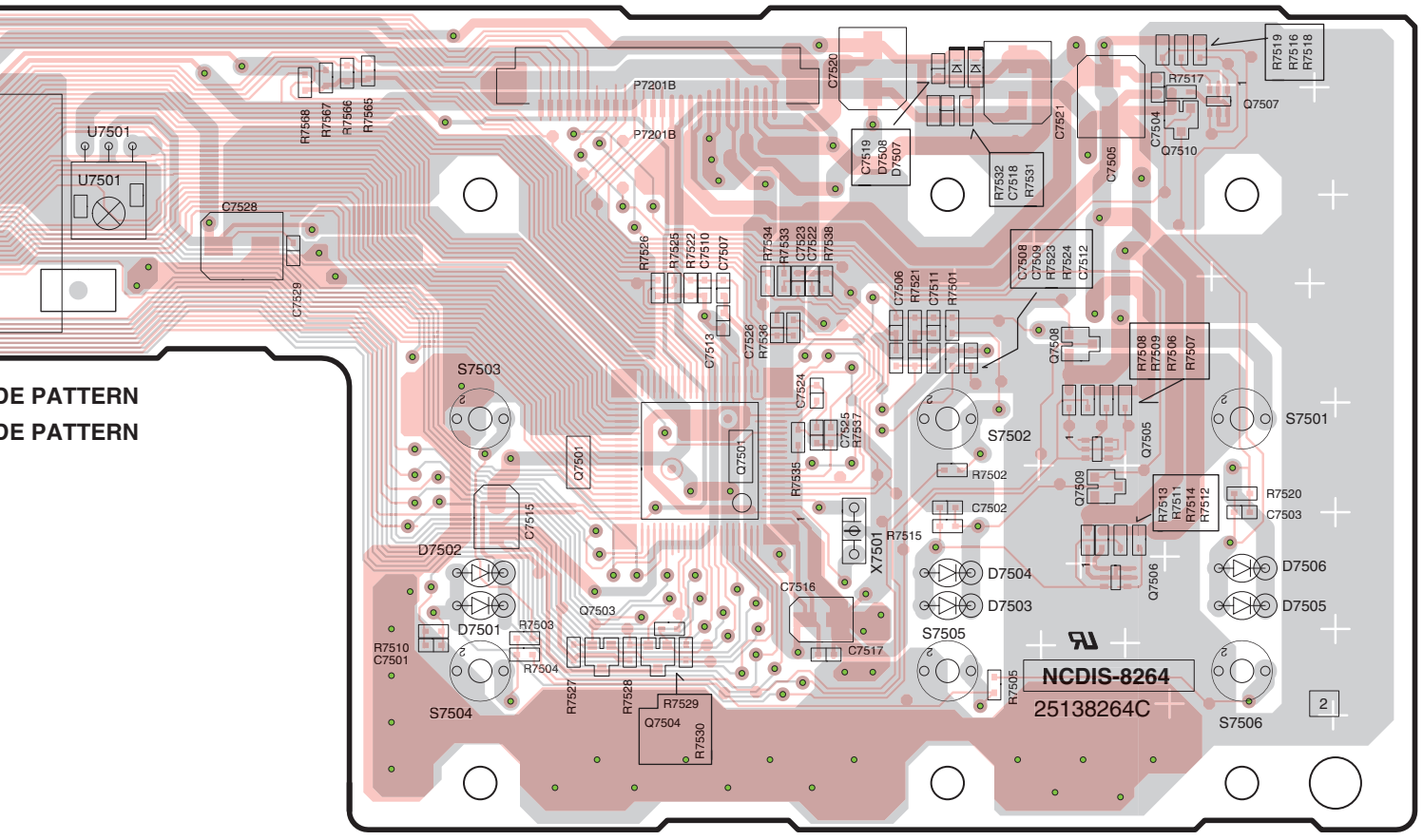

DE PATTERN
DE PATTERN

PRINTED CIRCUIT BOARD VIEW

U04 COMPONENT OUTPUT TERMINAL BOARD
NAETC-8260 <WT3P>,<PP2P>,<GR6P> ONLY

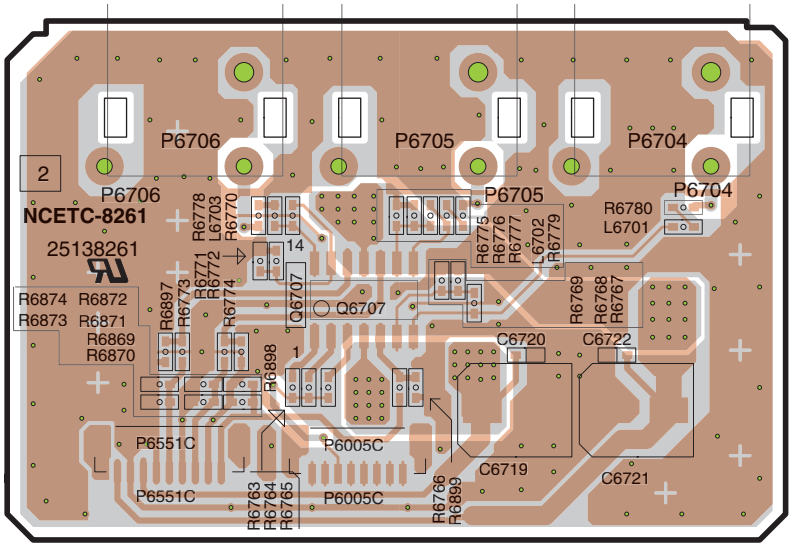

A-SIDE VIEW

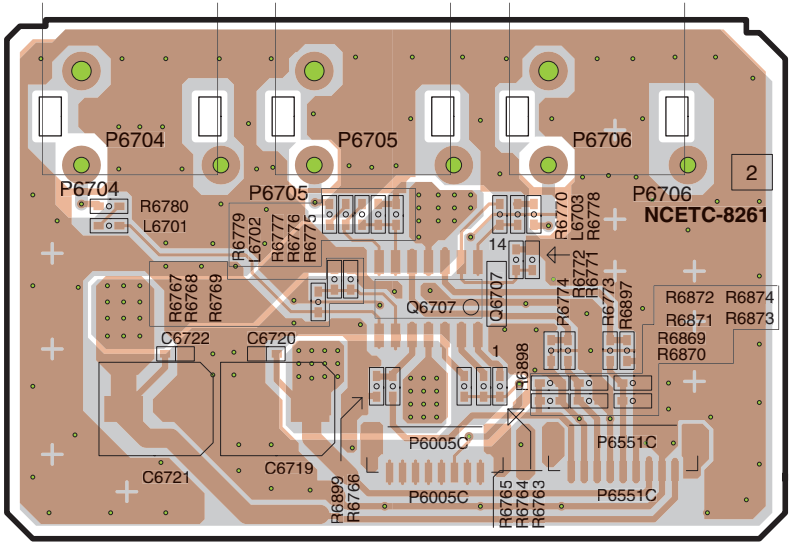

B-SIDE VIEW

U05 COMPONENT OUTPUT TERMINAL BOARD
NAETC-8261 <DC1N> ONLY

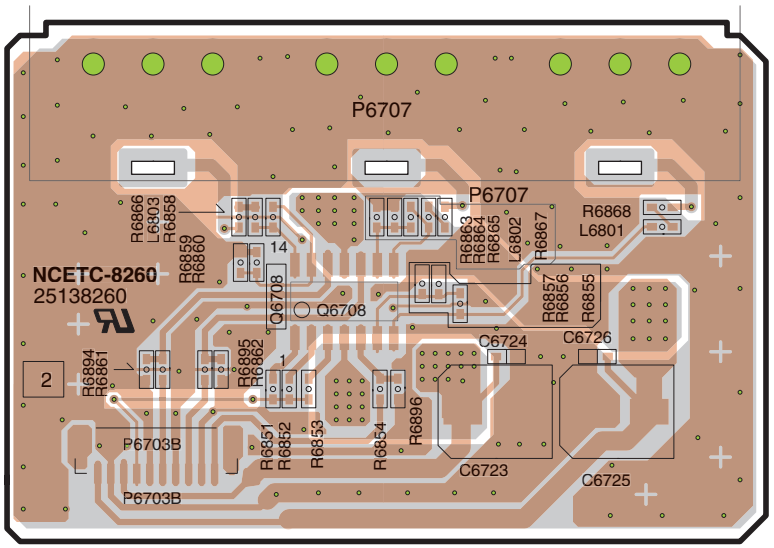

A-SIDE VIEW

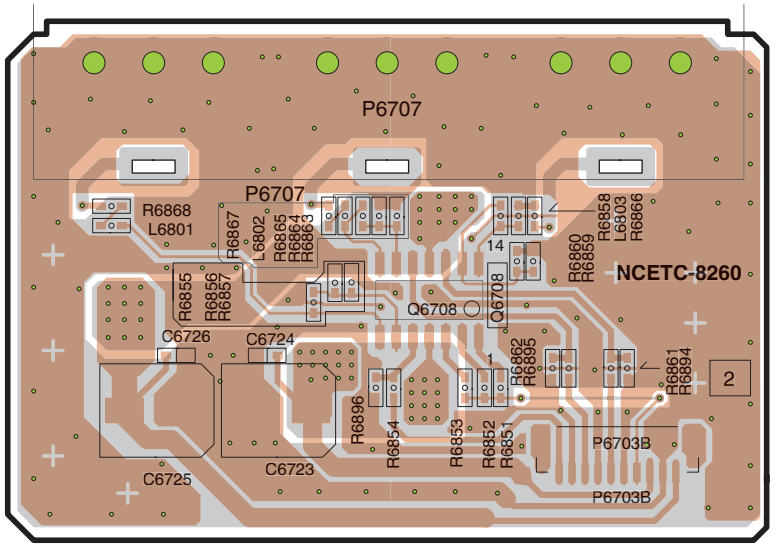

B-SIDE VIEW

A- SIDE PATTERN
B- SIDE PATTERN

PRINTED CIRCUIT BOARD VIEW

U12 POWER SUPPLY PC BOARD-1 NAPS-8269

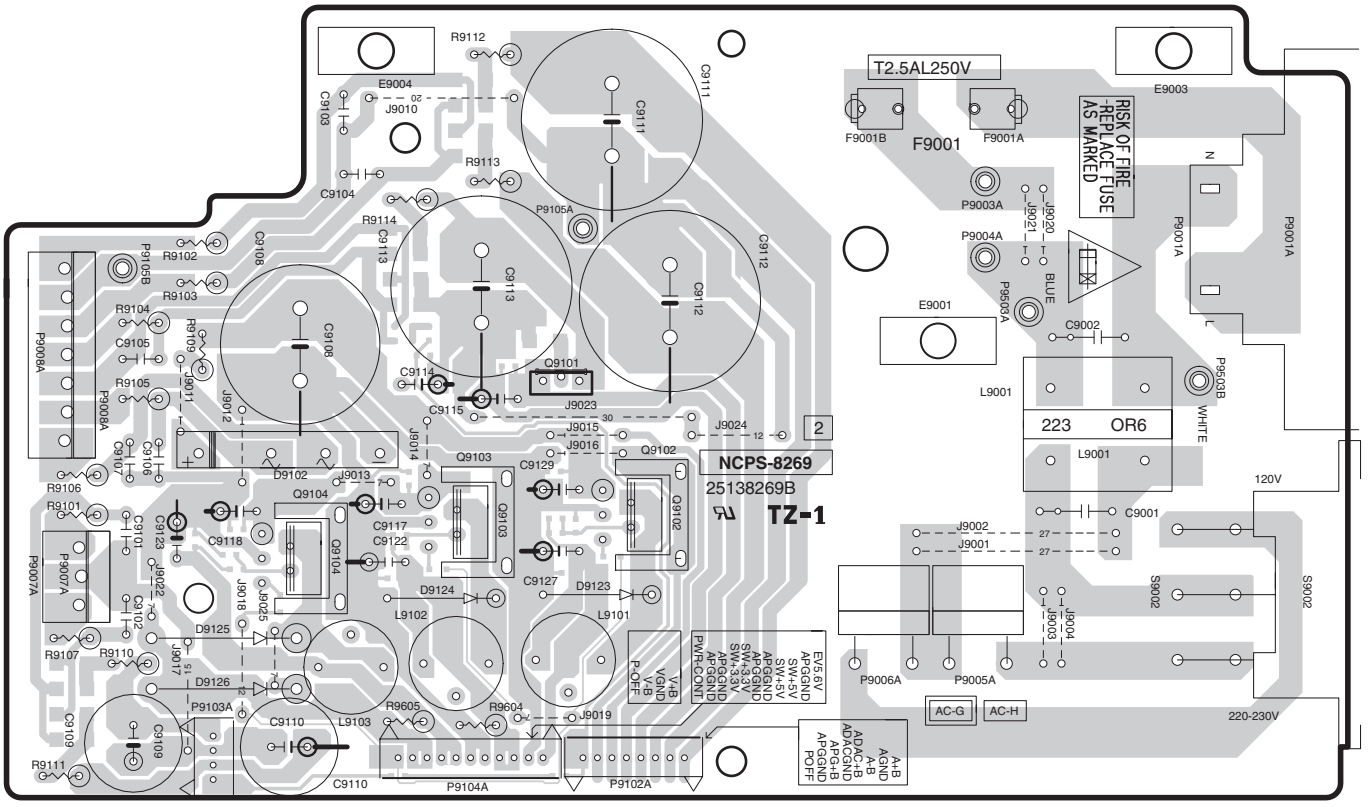

FROM A-SIDE VIEW

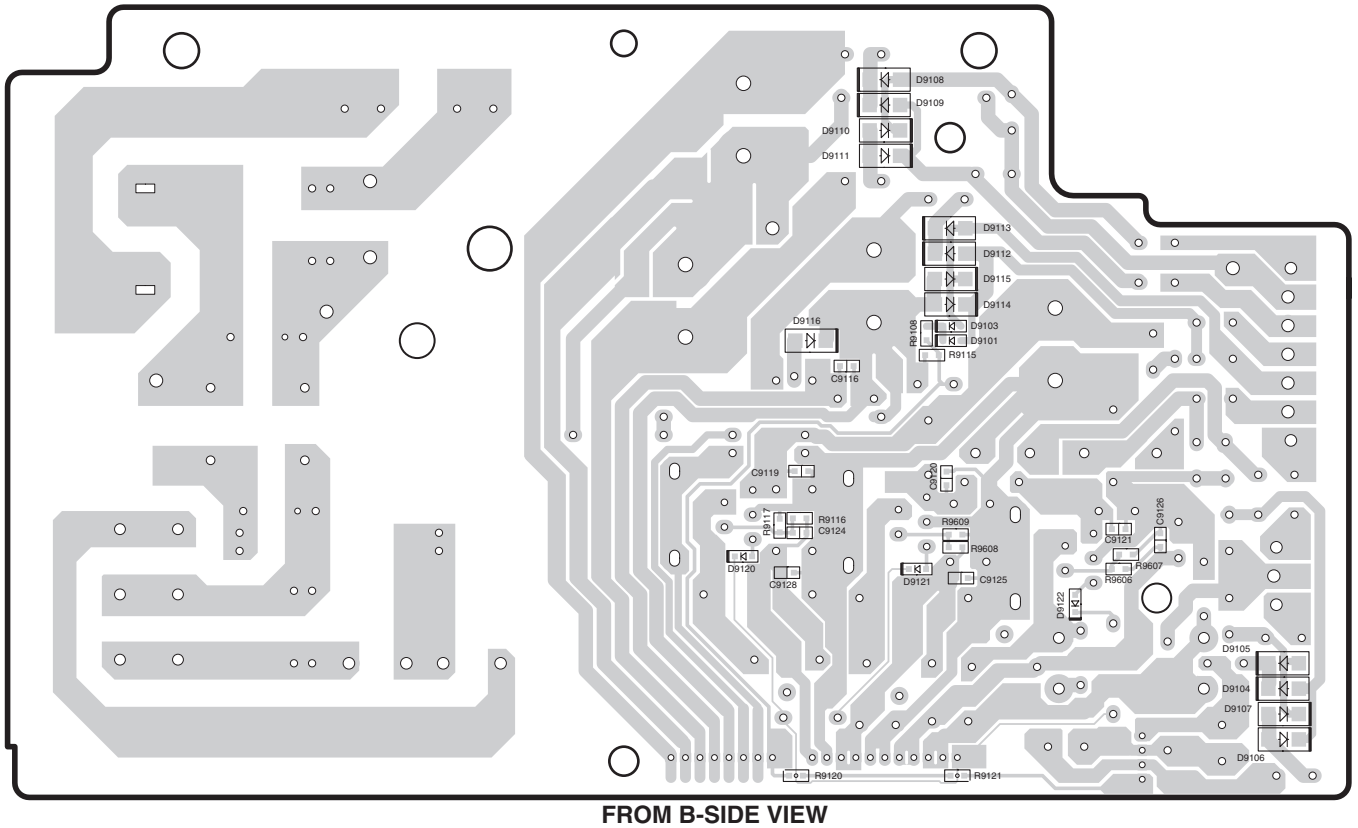

FROM B-SIDE VIEW

PRINTED CIRCUIT BOARD VIEW U13 POWER SUPPLY PC BOARD-2 NAPS-8270

FROM TOP VIEW

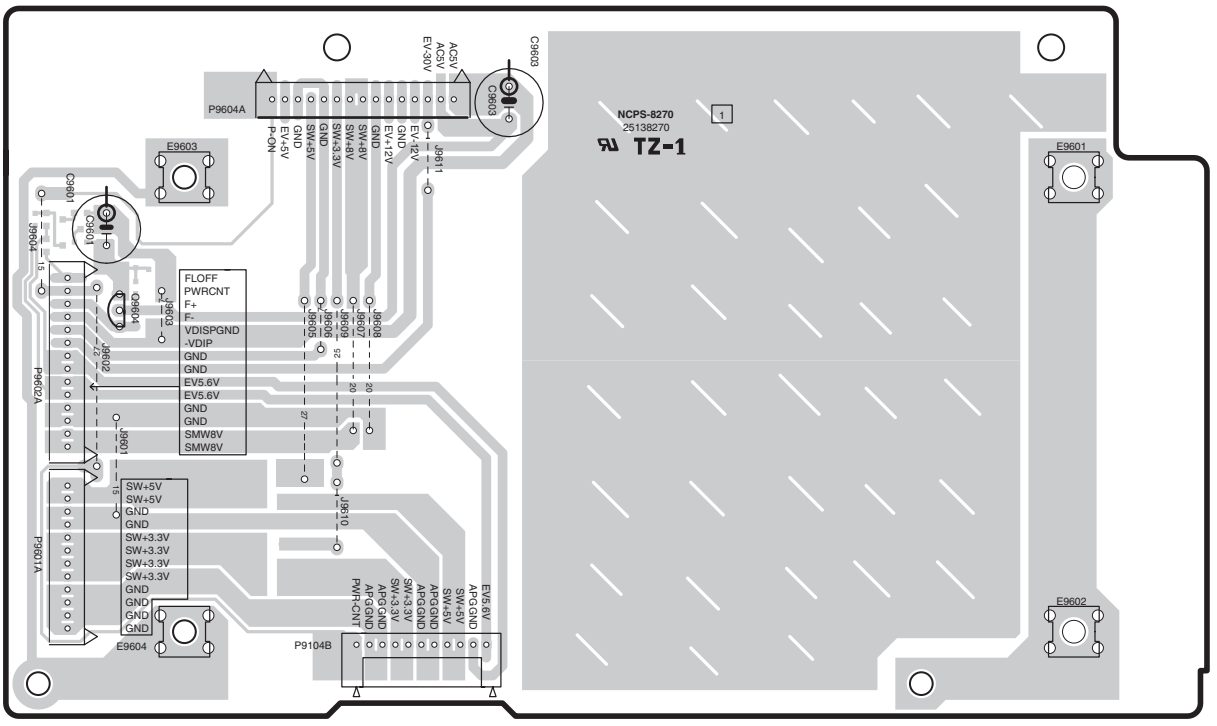

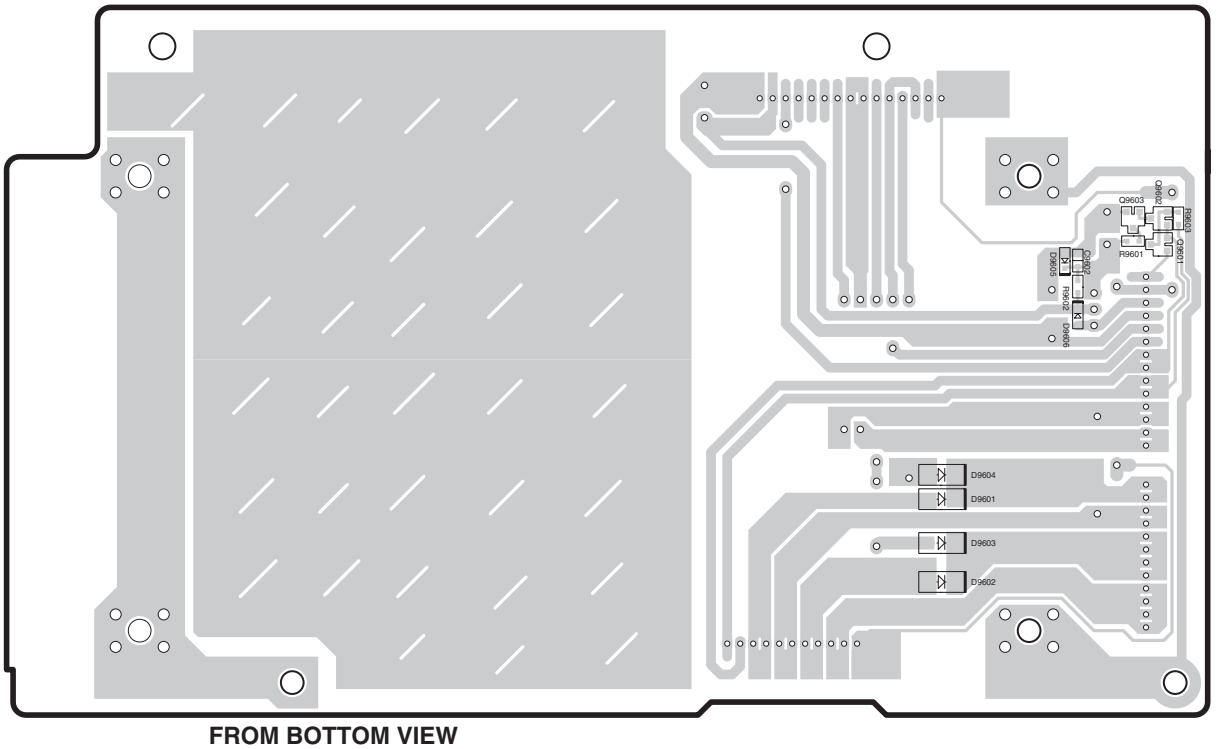

FROM BOTTOM VIEW

U14 POWER SWITCH PC BOARD NASW-7271

EXCEPT <DC1N>

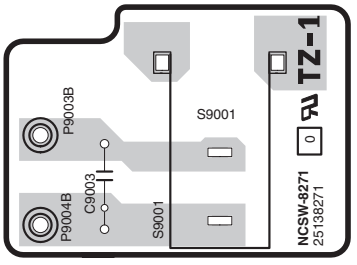

FROM TOP VIEW

PRINTED CIRCUIT BOARD VIEW U10 JOG SWITCH PC BOARD NASW-8267

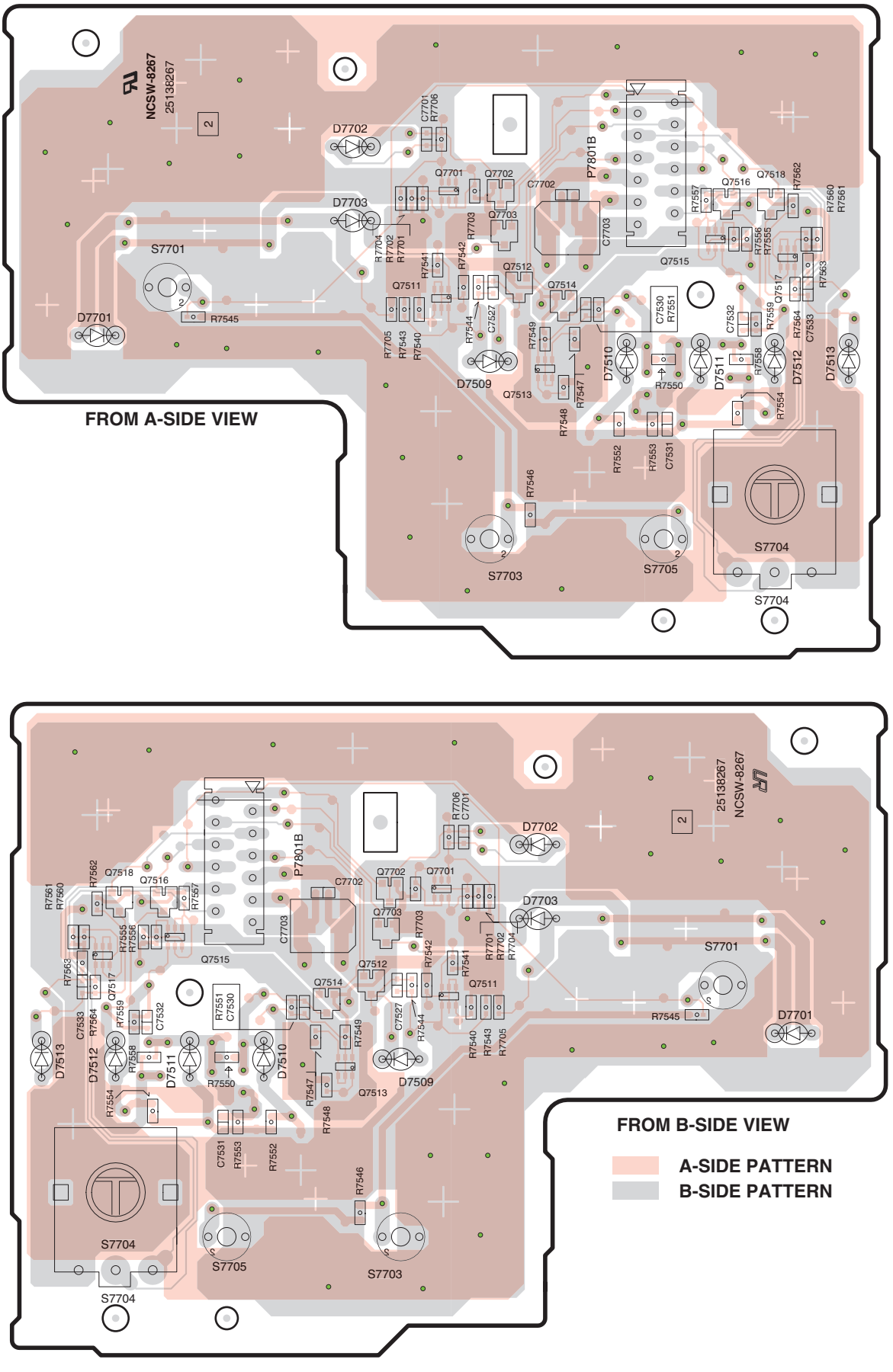

E F G H

A-SIDE VIEW

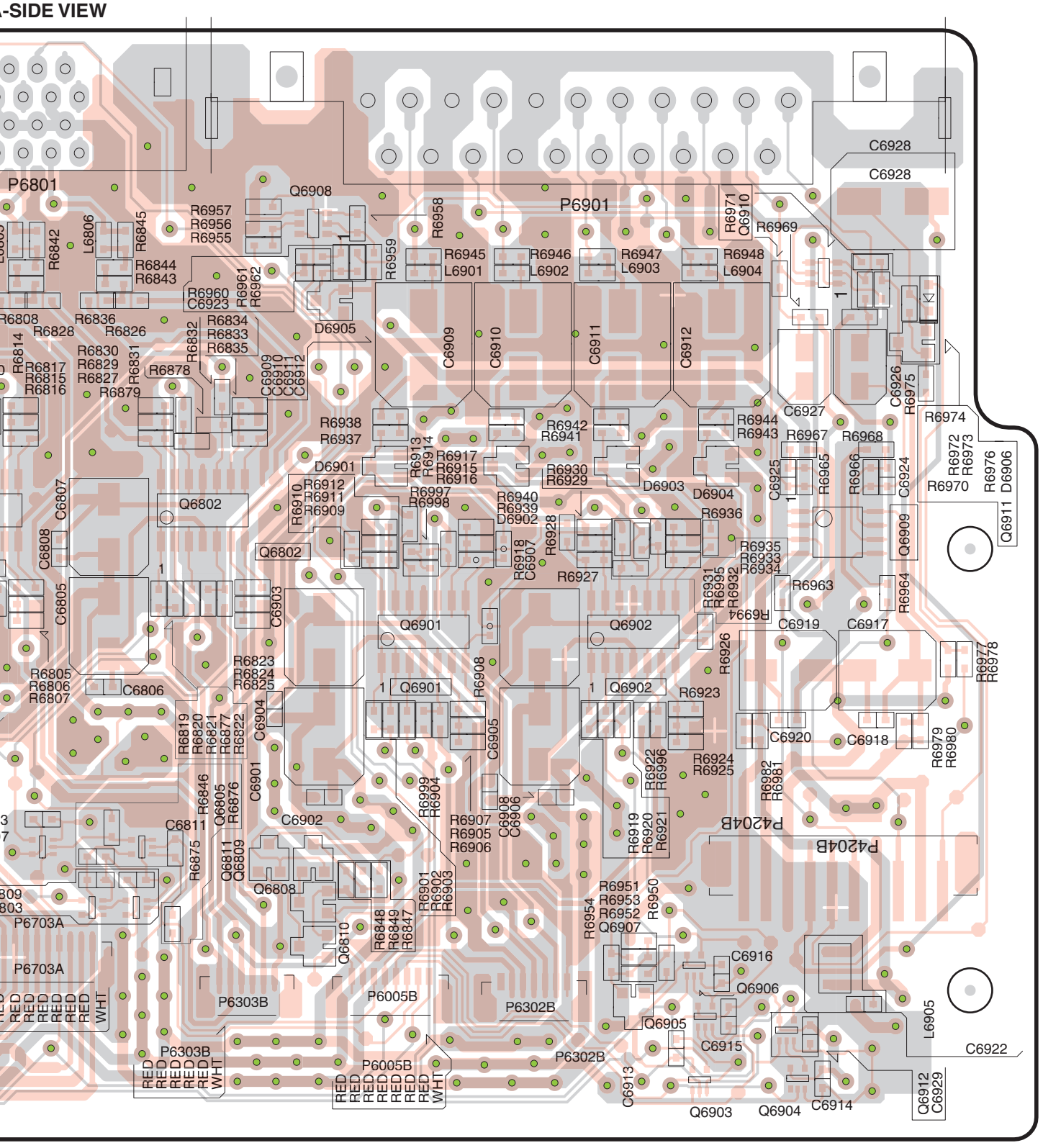

PRINTED CIRCUIT BOARD VIEW

U08 **COMPONENT/ D-TERMINAL/ SCART TERMINAL PC BOARD NAVD-8265**

FROM B-SIDE VIEW

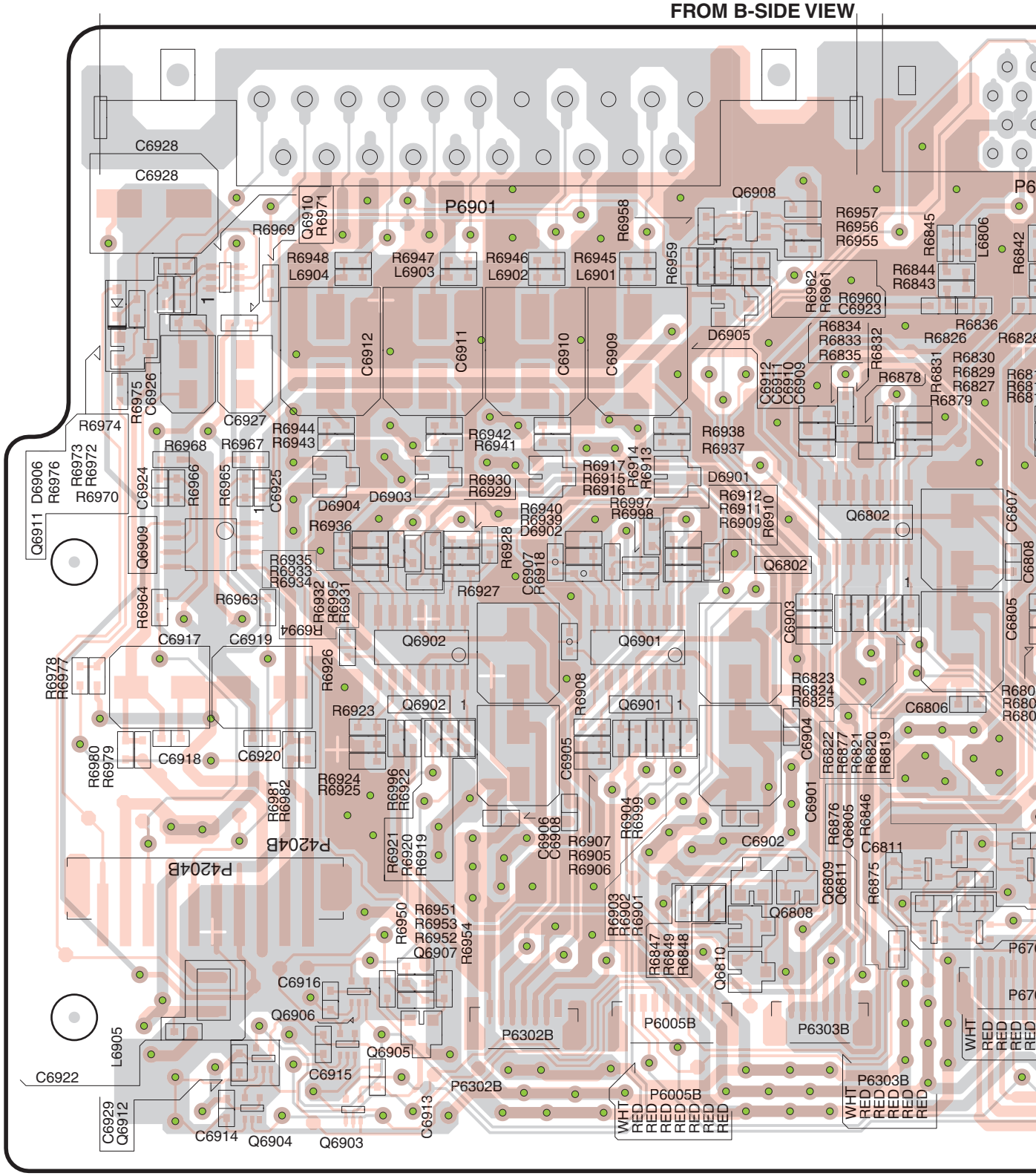

E F G H

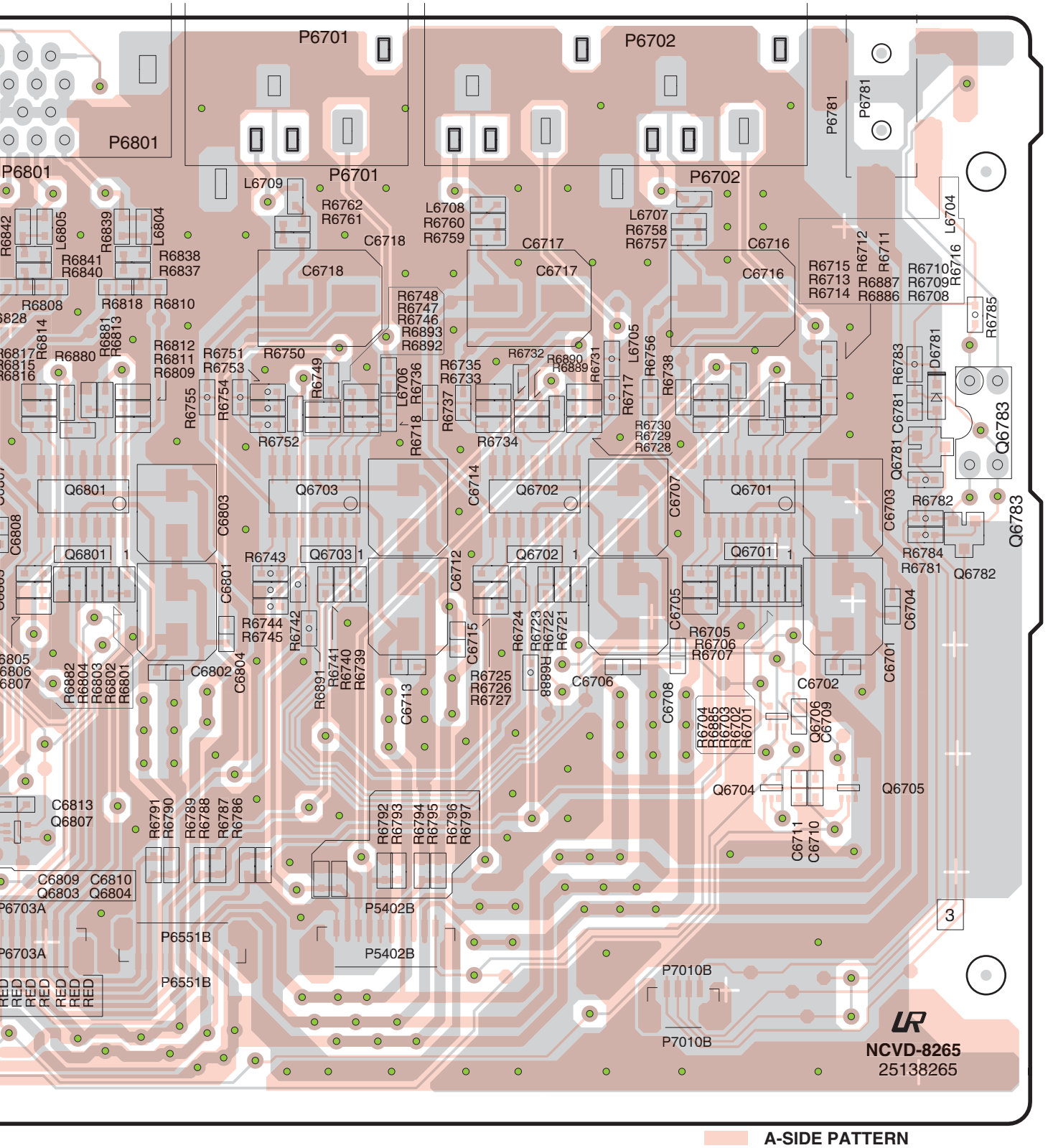

A-SIDE PATTERN
B-SIDE PATTERN

PRINTED CIRCUIT BOARD VIEW

U06 POWER SUPPLY PC BOARD-3 NAPS-8274

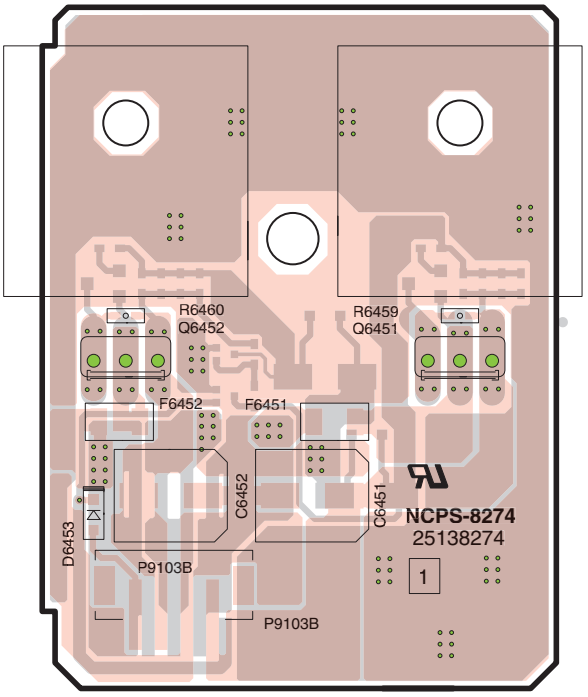

FROM A-SIDE VIEW

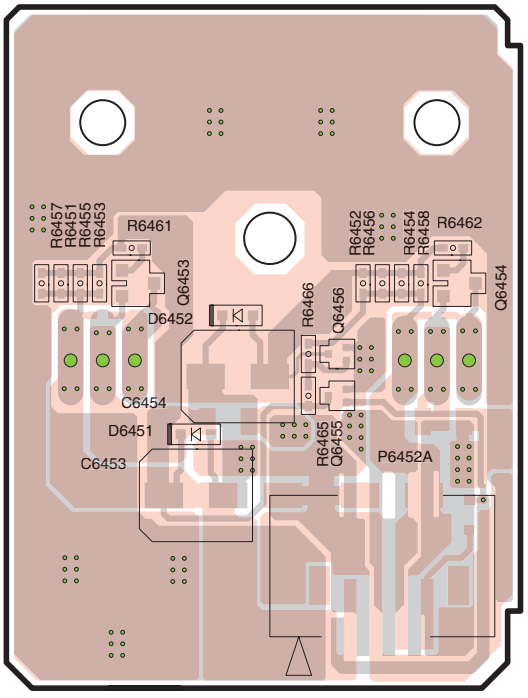

FROM B-SIDE VIEW

PRINTED CIRCUIT BOARD VIEW

U02 VIDEO OUTPUT TERMINAL BOARD NAVD-8258

A SIDE PATTERN AND A SIDE SILK SCREEN

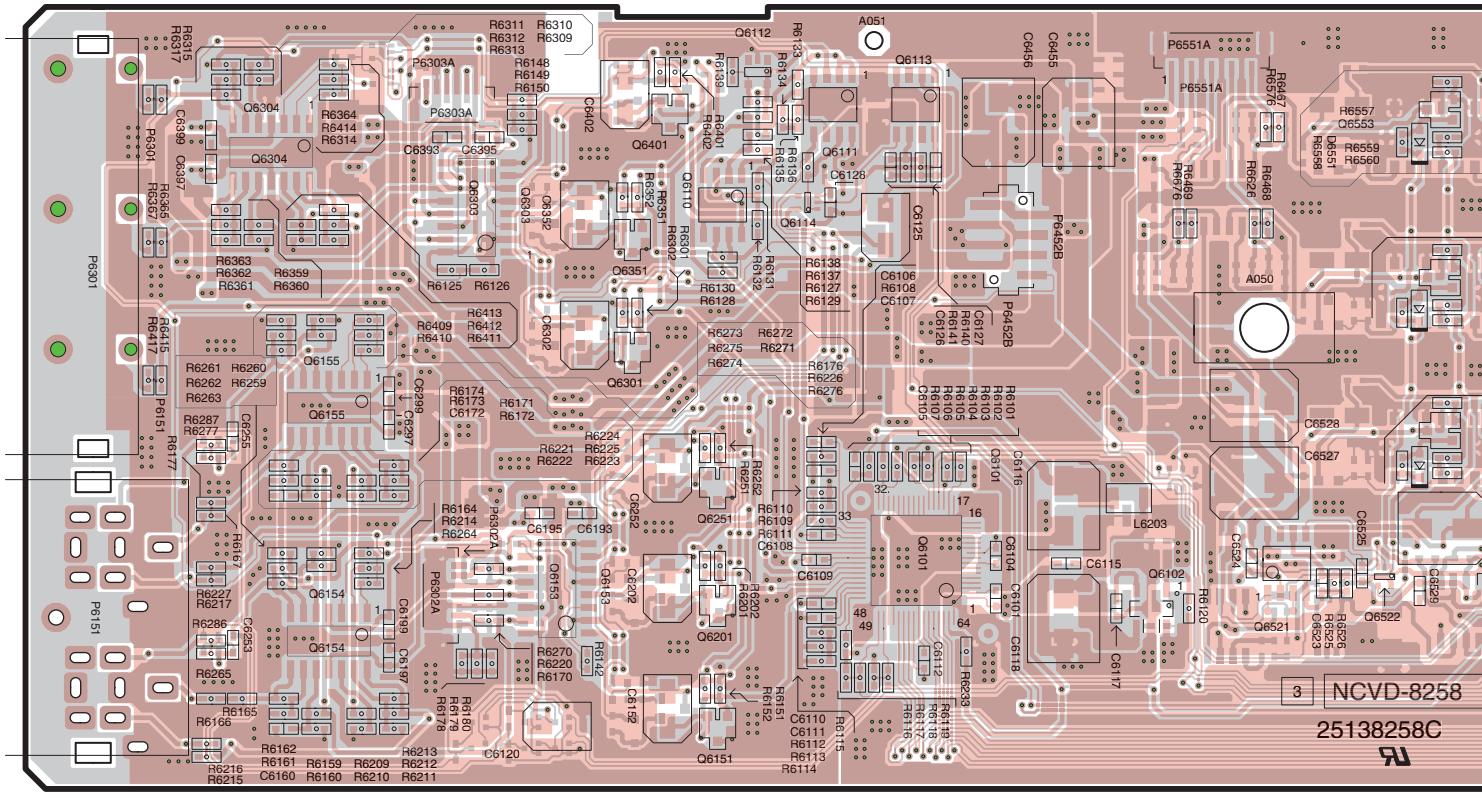

E F G H

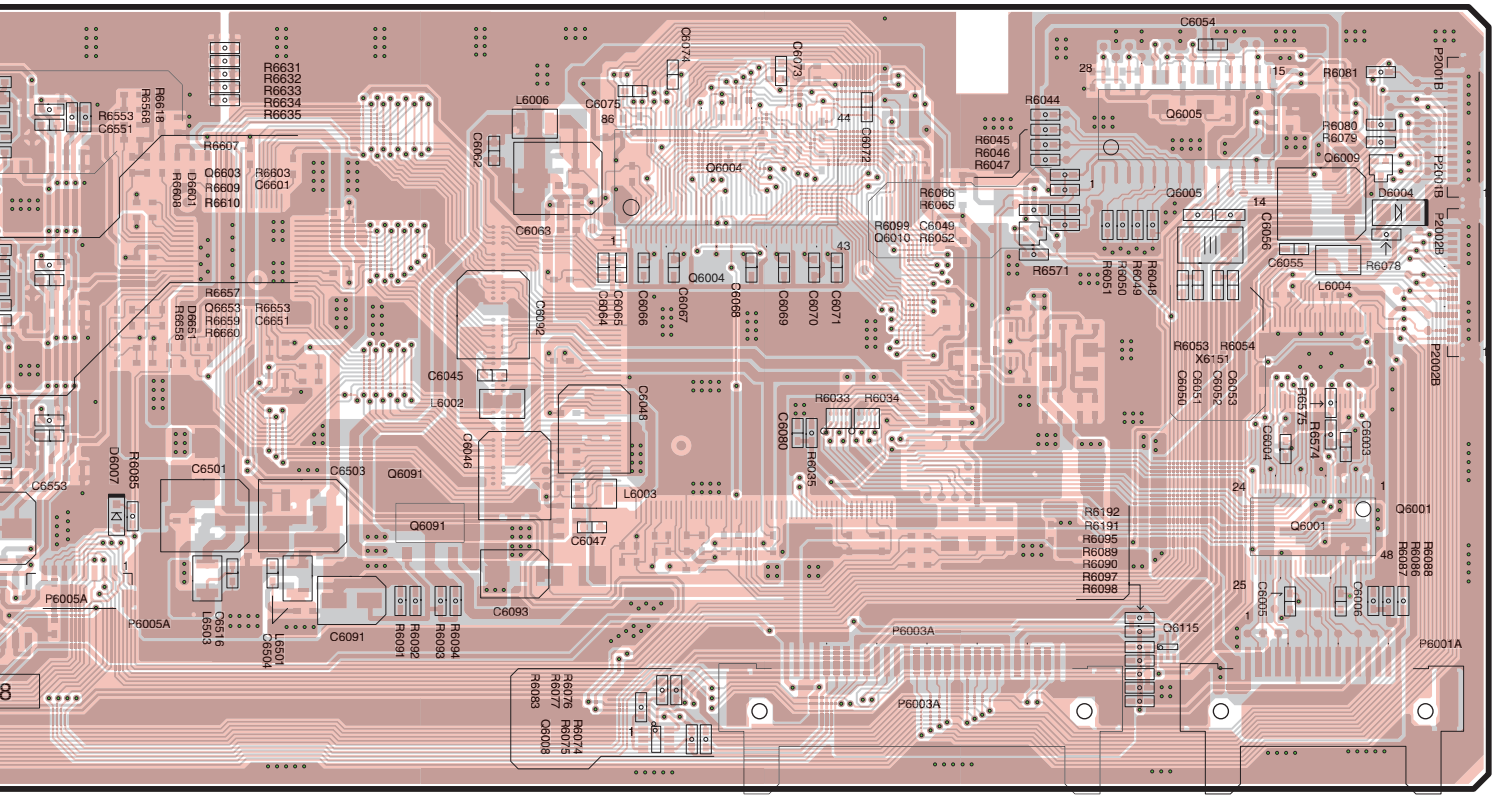

A SIDE PATTERN

B SIDE PATTERN

PRINTED CIRCUIT BOARD VIEW

U02 VIDEO OUTPUT TERMINAL BOARD NAVD-8258

B SIDE PATTERN AND B SIDE SILK SCREEN

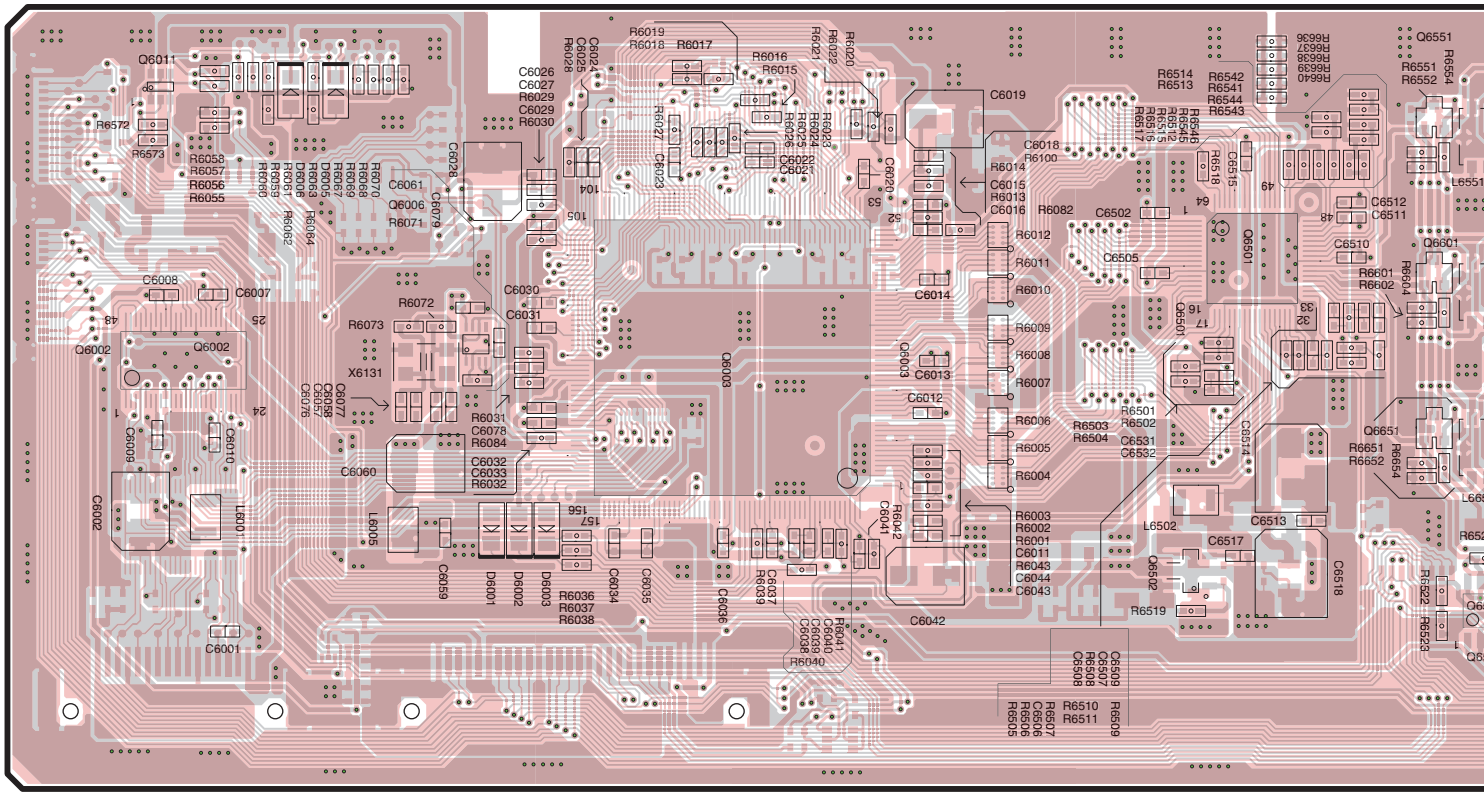

E F G H

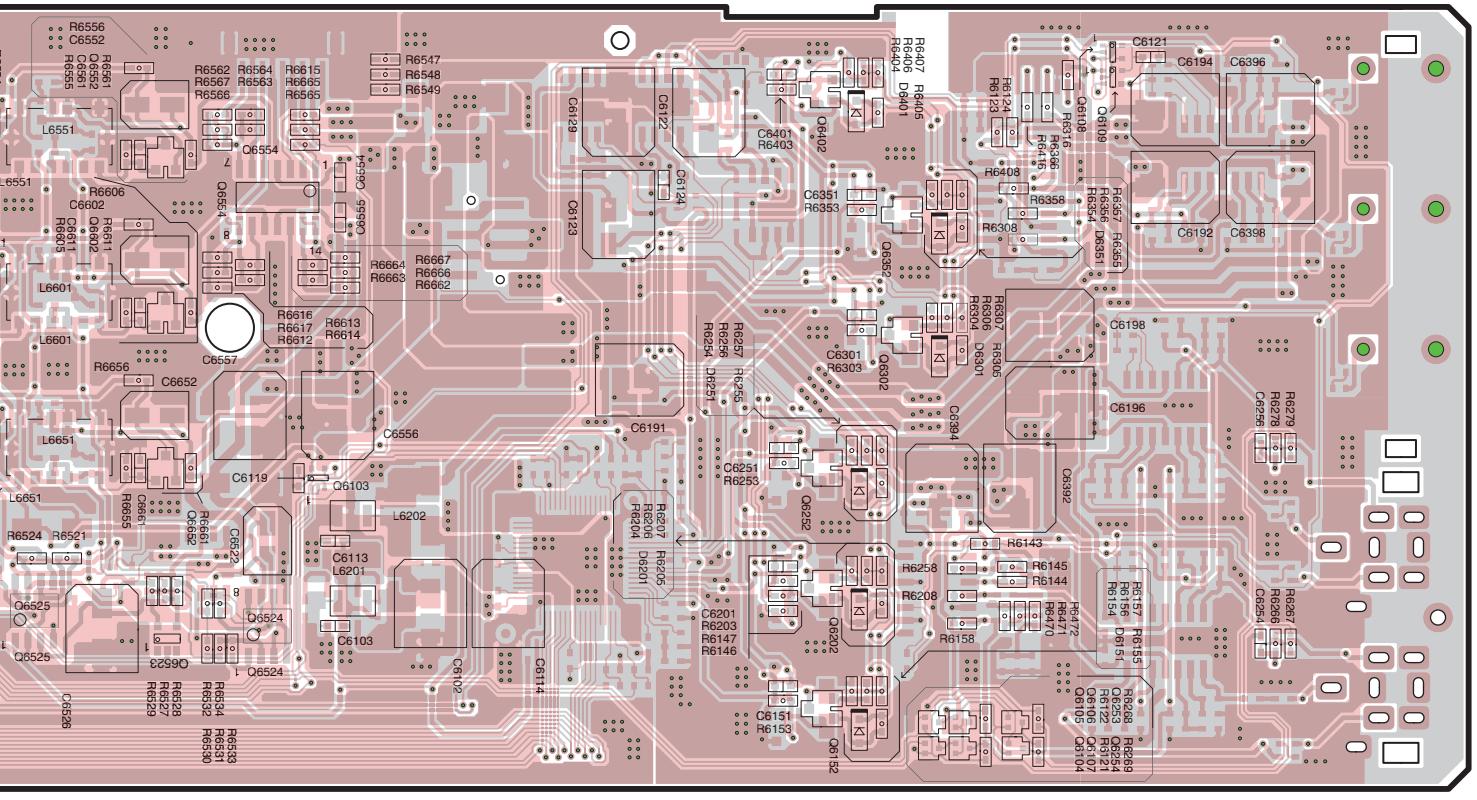

A SIDE PATTERN

B SIDE PATTERN

DV-SP1000 FW Upgrade Procedure

1 Connect the power cord.
See Standby/On indicator light.

2 Press "Open/Close" button on the unit.
See Start-up message shown on the front display.
Tray opens.

3 Put the Update CD-R on Tray.

4 Press "Open/Close" button again.
The CD-R is loaded.
"Update" is shown on the front display.
!!IMPORTANT!! While "Update" is shown, DO NOT turn off the power.
Doing this surely damages DVD Main Board.
See Start-up message shown again on the front display.
Wait until "Stop" is shown.
Note: Even if "Update" is not shown, go on to the next step after "Stop" is shown.
Certain conditions do not allow "Update" to appear.

5 Hold ">>|" button down and then press "VIDEO CIRCUIT OFF" button.
"TEST MENU" is shown.

6 Press ">>|" button twice.
"Update MODE" is shown.

7 Press "DISPLAY" button.
Press "|<<" button.
"All Update" is shown.

7.5 Press "DISPLAY" button.
"Really?" is shown.

8 Press "DISPLAY" button.
Update starts.
The following messages are flown in the front display in this order.
"Update of VIDEO F/W was successful"
"Update of i.LINK F/W was successful"
"Update of ARM F/W was successful"

The below message is shown when Update has completed.
"Update of SYSTEM F/W was successful"

9 Press "Standby/On" button.
See Standby indicator light.

10 Press "Open/Close" button.
Tray opens.

11 Take the Update CD-R out of Tray.

Finish

It takes about 40 minutes.

!! IMPORTANT !! DO NOT turn off the power during update. This might cause update to fail.

Note (Step 5-8): Your set will return to "Stop" (Step 4) unless you follow the next instruction in this procedure within a few seconds after each message is shown.

PACKING VIEW

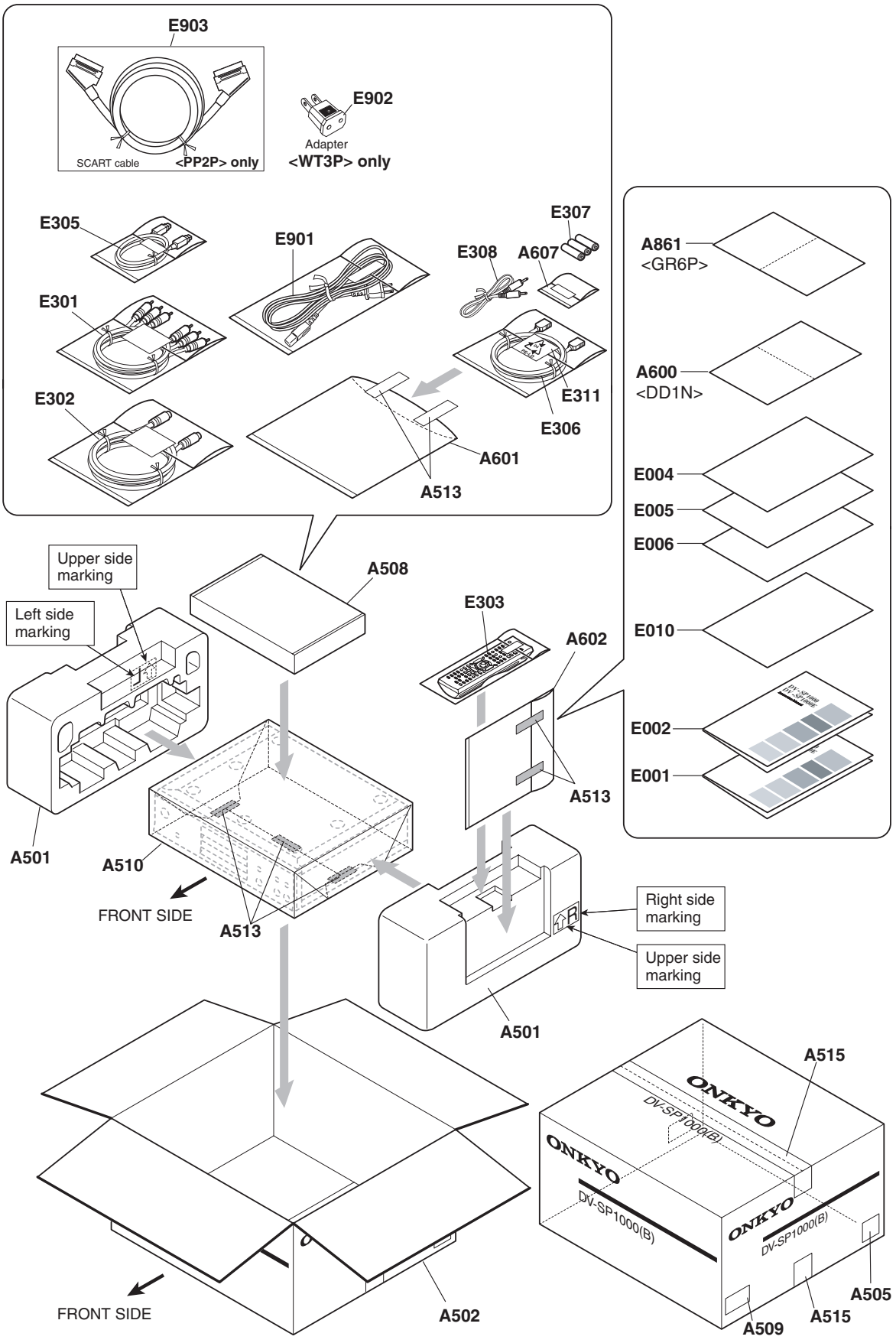

MGD-33 DVD MECHANISM PARTS LIST

DV-SP1000

Item	ONKYO Part No.	Description	Material	Q'TY pcs
1	A10-3322	CHASSIS AS		1
2	24810094	GEAR(CARRIER)	POM M90-44(N)	1
3	24810095	GEAR IDLER	POM LA-531(N)	2
4	24810096	GEAR(MAIN)	POM M90-44(B)	1
5	24802055 A	SUB CHASSIS(FRAME T)	ABS T250(B)	1
6	24802057	TRAY	ABS 450 (B)	1
7	24810092	GEAR(CENTER)	POM M90-44(N)	1
8	24840164-3	SLIDER	POM TR-20(B)	1
9	24826030	RETAINER(L)	POM TR-20(B)	1
10	24810093	GEAR(PULLEY)	TPE 6333N	1
11	24826031 A	RETAINER(R)	POM TR-20(B)	1
12	24810091	MOTOR PULLEY	POM M90-44(B)	1
13	24802054-1	SUB CHASSIS(CLAMP)	A5052P t1.5	1
14	24840164-1	SLIDER	POM TR-5(B)	1
15	24824006-1	CAP(CHC)	POM M90-44(B)	1
16	24828041	ROD (GUIDE) H	SUS420J2 D3.15	1
17	24828043	SHAFT (TRAY R) H	SUS420J2 D4.15	1
18	24828042	SHAFT(TRAY L) H	SUS420J2 D4.15	1
20	801593	BIND TAP TITE(P)SC M2.6*8	ETO	8
21	24834044	FLAT WSHR 2.6*4.7*0.5 CUT	ETO	2
22	801596	SCREW 2.6*6 SWCH 16A	ETO	3
23	801610	FLAT TAP TITE SCREW 2.6*6	ETO	2
24	24816040	BELT	YAMAUCHI	1
26	24836043	NON WOVEN FABRIC	NISSHO	1
27	24830004-1	YOKE(CHB)	CHEONGWAH	1
28	24832006-1	MAGNET(CHB)	JINBAO	1
30	24834049	WASHER	ETO	1
31	28141581	SHEET	NISSHO	1

32	24840166	WIRING HARNESS	SAKURA	1
33	24834050 A	SPACER	---	1
34	24804048	DC MOTOR MSN5G543C	PSI	1
35	24840167	DETECT SWITCH SSS23	SHINMEI	1
*	1H516702	MOTOR AS		1

PRINTED CIRCUIT BOARD PARTS LIST

DV-SP1000

NOTE: The components identifies by mark ! are critical for risk of fire and electric shock. Replace only with part number specified.

NOTE: ! : Safety parts
<DC1N>: North American and Canadian region
<PP2P>: European region
<GK3P>: Korean region
<WT3P>: East Asian region
<GR6P>: Chinese region

U01 : DVD MAIN BOARD NADG-8257

PWB NO.	CIRCUIT NO.	PART NAME	DESCRIPTION		PART NO.	REMARKS
DG8257	C1001	C-CERA C	CK725B1C-104K1	1	332121045R1	
DG8257	C1002	C-CERA C	CK725B1C-104K1	1	332121045R1	
DG8257	C1003	C-CERA C	CC725CH1H-220J1	1	342102204R1	
DG8257	C1004	C-CERA C	CC725CH1H-220J1	1	342102204R1	
DG8257	C1005	C-CERA C	CC725CH1H-220J1	1	342102204R1	
DG8257	C1006	C-CERA C	CC725CH1H-220J1	1	342102204R1	
DG8257	C1007	C-CERA C	CK725B1H-222K1	1	332102225R1	
DG8257	C1008	C-CERA C	CK725B1H-222K1	1	332102225R1	
DG8257	C1009	C-CERA C	CK725B1H-222K1	1	332102225R1	
DG8257	C1010	C-CERA C	CK725B1H-222K1	1	332102225R1	
DG8257	C1011	C-CERA C	CC725CH1H-331J1	1	342103314R1	
DG8257	C1012	C-CERA C	CK725F1E-104Z1	1	332161040R1	
DG8257	C1013	CHIP ELECT C	CEWX16V-22M	1	356742209R2	
DG8257	C1014	C-CERA C	CK725F1E-104Z1	1	332161040R1	
DG8257	C1015	C-CERA C	CK725B1E-333K1	1	332113335R1	
DG8257	C1016	C-CERA C	CK725B1E-333K1	1	332113335R1	
DG8257	C1017	C-CERA C	CC725CH1H-151J1	1	342101514R1	
DG8257	C1018	C-CERA C	CK725B1A-474K1	1	332134745R1	
DG8257	C1019	C-CERA C	CK725B1A-474K1	1	332134745R1	
DG8257	C1020	C-CERA C	CK725B1C-104K1	1	332121045R1	

DG8257	C1021	C-CERA C	CK725F1E-104Z1	1	332161040R1
DG8257	C1022	CHIP ELECT C	CEWX16V-22M	1	356742209R2
DG8257	C1023	C-CERA C	CK725F1E-104Z1	1	332161040R1
DG8257	C1024	C-CERA C	CK725B1H-473K1	1	332104735R1
DG8257	C1025	C-CERA C	CK725F1E-104Z1	1	332161040R1
DG8257	C1026	CHIP ELECT C	CEWX16V-22M	1	356742209R2
DG8257	C1027	C-CERA C	CC725CH1E-102J1	1	342111024R1
DG8257	C1028	C-CERA C	CK725B1C-104K1	1	332121045R1
DG8257	C1029	C-CERA C	CK725B1C-104K1	1	332121045R1
DG8257	C1030	C-CERA C	CK725B1C-104K1	1	332121045R1
DG8257	C1031	C-CERA C	CK725F1E-104Z1	1	332161040R1
DG8257	C1032	CHIP ELECT C	CEWX6.3V-100M	1	356721019R2
DG8257	C1033	C-CERA C	CK725B1C-104K1	1	332121045R1
DG8257	C1034	C-CERA C	CK725B1C-104K1	1	332121045R1
DG8257	C1035	C-CERA C	CK725B1H-103K1	1	332101035R1
DG8257	C1036	C-CERA C	CC725CH1H-100D1	1	342101002R1
DG8257	C1037	C-CERA C	CC725CH1H-100D1	1	342101002R1
DG8257	C1038	C-CERA C	CK725F1E-104Z1	1	332161040R1
DG8257	C1039	CHIP ELECT C	CEWX6.3V-47M	1	356724709R2
DG8257	C1040	C-CERA C	CC725CH1E-102J1	1	342111024R1
DG8257	C1041	CHIP ELECT C	CEWX16V-10M	1	356741009R2
DG8257	C1042	CHIP ELECT C	CEWX16V-10M	1	356741009R2
DG8257	C1043	CHIP ELECT C	CEWX6.3V-47M	1	356724709R2
DG8257	C1044	C-CERA C	CC725CH1E-102J1	1	342111024R1
DG8257	C1045	CHIP ELECT C	CEWX16V-10M	1	356741009R2
DG8257	C1046	CHIP ELECT C	CEWX16V-10M	1	356741009R2
DG8257	C1047	CHIP ELECT C	CEWX16V-22M	1	356742209R2
DG8257	C1048	CHIP ELECT C	CEWX6.3V-100M	1	356721019R2
DG8257	C1049	C-CERA C	CK725F1E-104Z1	1	332161040R1
DG8257	C1050	CHIP ELECT C	CEWX6.3V-100M	1	356721019R2
DG8257	C1051	C-CERA C	CK725F1E-104Z1	1	332161040R1
DG8257	C1052	CHIP ELECT C	CEWX6.3V-100M	1	356721019R2
DG8257	C1053	CHIP ELECT C	CEWX50V-1M	1	356780109R2

DG8257	C1054	CHIP ELECT C	CEWX4V-220M	1	3567A2219R2
DG8257	C1101	C-CERA C	CC725CH1H-221J1	1	342102214R1
DG8257	C1102	C-CERA C	CC725CH1H-101J1	1	342101014R1
DG8257	C1103	C-CERA C	CC725CH1E-102J1	1	342111024R1
DG8257	C1104	C-CERA C	CK725F1E-104Z1	1	332161040R1
DG8257	C1105	C-CERA C	CK725F1E-104Z1	1	332161040R1
DG8257	C1106	CHIP ELECT C	CEWX16V-22M	1	356742209R2
DG8257	C1107	C-CERA C	CK725F1E-104Z1	1	332161040R1
DG8257	C1108	C-CERA C	CK725F1E-104Z1	1	332161040R1
DG8257	C1109	CHIP ELECT C	CEWX16V-22M	1	356742209R2
DG8257	C1110	C-CERA C	CK725F1E-104Z1	1	332161040R1
DG8257	C1111	CHIP ELECT C	CEWX16V-10M	1	356741009R2
DG8257	C1112	CHIP ELECT C	CEWX16V-10M	1	356741009R2
DG8257	C1113	C-CERA C	CK725B1H-223K1	1	332102235R1
DG8257	C1114	C-CERA C	CK725B1H-223K1	1	332102235R1
DG8257	C1115	C-CERA C	CK725B1E-473K1	1	332114735R1
DG8257	C1116	C-CERA C	CK725B1E-473K1	1	332114735R1
DG8257	C1117	C-CERA C	CK725F1E-104Z1	1	332161040R1
DG8257	C1201	C-CERA C	CK725F1A-105Z1	1	332181050R1
DG8257	C1202	C-CERA C	CK725F1A-105Z1	1	332181050R1
DG8257	C1203	C-CERA C	CK725F1A-105Z1	1	332181050R1
DG8257	C1206	C-CERA C	CK725F1A-105Z1	1	332181050R1
DG8257	C1207	C-CERA C	CK725F1A-105Z1	1	332181050R1
DG8257	C1208	C-CERA C	CK725F1A-105Z1	1	332181050R1
DG8257	C1209	C-CERA C	CK725B1E-223K1	1	332112235R1
DG8257	C1210	C-CERA C	CC725CH1H-151J1	1	342101514R1
DG8257	C1211	C-CERA C	CK725B1E-223K1	1	332112235R1
DG8257	C1212	C-CERA C	CK725B1C-104K1	1	332121045R1
DG8257	C1213	C-CERA C	CC725CH1H-101J1	1	342101014R1
DG8257	C1214	C-CERA C	CK725B1E-223K1	1	332112235R1
DG8257	C1215	C-CERA C	CC725CH1H-101J1	1	342101014R1
DG8257	C1216	C-CERA C	CK725B1A-154K1	1	332131545R1
DG8257	C1217	C-CERA C	CK725F1A-105Z1	1	332181050R1

DG8257	C1218	C-CERA C	CK725F1A-105Z1	1	332181050R1
DG8257	C1219	C-CERA C	CC725CH1H-331J1	1	342103314R1
DG8257	C1220	C-CERA C	CC725CH1H-331J1	1	342103314R1
DG8257	C1221	C-CERA C	CK725F1A-105Z1	1	332181050R1
DG8257	C1222	C-CERA C	CK725F1E-104Z1	1	332161040R1
DG8257	C1223	C-CERA C	CK725F1A-105Z1	1	332181050R1
DG8257	C1224	C-CERA C	CK725B1H-473K1	1	332104735R1
DG8257	C1225	C-CERA C	CK725F1A-105Z1	1	332181050R1
DG8257	C1226	C-CERA C	CK725B1H-103K1	1	332101035R1
DG8257	C1227	C-CERA C	CK725F1A-105Z1	1	332181050R1
DG8257	C1228	C-CERA C	CK725F1A-105Z1	1	332181050R1
DG8257	C1229	C-CERA C	CK725F1A-105Z1	1	332181050R1
DG8257	C1230	C-CERA C	CK725F1A-105Z1	1	332181050R1
DG8257	C1232	C-CERA C	CK725F1A-105Z1	1	332181050R1
DG8257	C1233	C-CERA C	CK725F1A-105Z1	1	332181050R1
DG8257	C1234	CHIP ELECT C	CEWX4V-220M	1	3567A2219R2
DG8257	C1235	CHIP ELECT C	CEWX4V-220M	1	3567A2219R2
DG8257	C1236	CHIP ELECT C	CEWX4V-220M	1	3567A2219R2
DG8257	C1237	CHIP ELECT C	CEWX4V-220M	1	3567A2219R2
DG8257	C1238	CHIP ELECT C	CEWX16V-10M	1	356741009R2
DG8257	C1239	C-CERA C	CK725F1A-105Z1	1	332181050R1
DG8257	C1240	C-CERA C	CC725CH1H-560J1	1	342105604R1
DG8257	C1241	C-CERA C	CK725F1A-105Z1	1	332181050R1
DG8257	C1242	C-CERA C	CK725F1A-105Z1	1	332181050R1
DG8257	C1243	C-CERA C	CK725F1A-105Z1	1	332181050R1
DG8257	C1251	C-CERA C	CC725CH1H-471J1	1	342104714R1
DG8257	C1252	C-CERA C	CK725F1E-104Z1	1	332161040R1
DG8257	C1253	C-CERA C	CC725CH1H-471J1	1	342104714R1
DG8257	C1254	C-CERA C	CK725F1E-104Z1	1	332161040R1
DG8257	C1255	C-CERA C	CC725CH1H-471J1	1	342104714R1
DG8257	C1256	C-CERA C	CK725F1E-104Z1	1	332161040R1
DG8257	C1257	CHIP ELECT C	CEWX4V-220M	1	3567A2219R2
DG8257	C1258	C-CERA C	CK725F1A-105Z1	1	332181050R1

DG8257	C1301	C-CERA C	CK725F1A-105Z1	1	332181050R1
DG8257	C1302	C-CERA C	CC725CH1E-102J1	1	342111024R1
DG8257	C1304	C-CERA C	CK725F1A-105Z1	1	332181050R1
DG8257	C1305	C-CERA C	CK725F1A-105Z1	1	332181050R1
DG8257	C1306	C-CERA C	CK725F1A-105Z1	1	332181050R1
DG8257	C1307	C-CERA C	CK725F1A-105Z1	1	332181050R1
DG8257	C1308	C-CERA C	CK725F1A-105Z1	1	332181050R1
DG8257	C1309	C-CERA C	CK725F1A-105Z1	1	332181050R1
DG8257	C1310	C-CERA C	CK725F1A-105Z1	1	332181050R1
DG8257	C1311	C-CERA C	CK725F1A-105Z1	1	332181050R1
DG8257	C1312	C-CERA C	CK725F1A-105Z1	1	332181050R1
DG8257	C1313	C-CERA C	CK725F1A-105Z1	1	332181050R1
DG8257	C1314	C-CERA C	CK725F1A-105Z1	1	332181050R1
DG8257	C1315	C-CERA C	CK725F1A-105Z1	1	332181050R1
DG8257	C1316	C-CERA C	CK725F1A-105Z1	1	332181050R1
DG8257	C1317	C-CERA C	CK725F1A-105Z1	1	332181050R1
DG8257	C1318	C-CERA C	CK725F1A-105Z1	1	332181050R1
DG8257	C1319	CHIP ELECT C	CEWX4V-220M	1	3567A2219R2
DG8257	C1320	CHIP ELECT C	CEWX4V-220M	1	3567A2219R2
DG8257	C1321	CHIP ELECT C	CEWX4V-220M	1	3567A2219R2
DG8257	C1322	CHIP ELECT C	CEWX4V-220M	1	3567A2219R2
DG8257	C1323	C-CERA C	CK725F1A-105Z1	1	332181050R1
DG8257	C1324	CHIP ELECT C	CEWX6.3V-100M	1	356721019R2
DG8257	C1325	C-CERA C	CK725F1A-105Z1	1	332181050R1
DG8257	C1326	C-CERA C	CK725F1A-105Z1	1	332181050R1
DG8257	C1327	C-CERA C	CK725F1A-105Z1	1	332181050R1
DG8257	C1328	C-CERA C	CK725F1A-105Z1	1	332181050R1
DG8257	C1329	C-CERA C	CK725F1A-105Z1	1	332181050R1
DG8257	C1330	C-CERA C	CK725F1A-105Z1	1	332181050R1
DG8257	C1331	C-CERA C	CK725F1A-105Z1	1	332181050R1
DG8257	C1332	CHIP ELECT C	CEWX6.3V-100M	1	356721019R2
DG8257	C1333	CHIP ELECT C	CEWX16V-22M	1	356742209R2
DG8257	C1334	CHIP ELECT C	CEWX16V-22M	1	356742209R2

DG8257	C1335	C-CERA C	CK725F1A-105Z1	1	332181050R1
DG8257	C1336	C-CERA C	CK725F1A-105Z1	1	332181050R1
DG8257	C1337	C-CERA C	CK725B1H-103K1	1	332101035R1
DG8257	C1338	C-CERA C	CC725CH1H-020C1	1	342100201R1
DG8257	C1339	C-CERA C	CC725CH1H-020C1	1	342100201R1
DG8257	C1340	C-CERA C	CK725F1A-105Z1	1	332181050R1
DG8257	C1341	CHIP ELECT C	CEWX4V-220M	1	3567A2219R2
DG8257	C1342	C-CERA C	CK725F1A-105Z1	1	332181050R1
DG8257	C1343	C-CERA C	CC725CH1H-100D1	1	342101002R1
DG8257	C1344	C-CERA C	CC725CH1H-100D1	1	342101002R1
DG8257	C1345	C-CERA C	CK725F1A-105Z1	1	332181050R1
DG8257	C1347	C-CERA C	CK725F1A-105Z1	1	332181050R1
DG8257	C1348	C-CERA C	CK725F1A-105Z1	1	332181050R1
DG8257	C1349	C-CERA C	CK725F1A-105Z1	1	332181050R1
DG8257	C1350	C-CERA C	CK725F1A-105Z1	1	332181050R1
DG8257	C1351	C-CERA C	CK725F1A-105Z1	1	332181050R1
DG8257	C1352	C-CERA C	CK725F1A-105Z1	1	332181050R1
DG8257	C1358	C-CERA C	CK725F1A-105Z1	1	332181050R1
DG8257	C1359	C-CERA C	CK725F1A-105Z1	1	332181050R1
DG8257	C1360	C-CERA C	CK725F1A-105Z1	1	332181050R1
DG8257	C1371	CHIP ELECT C	CEWX16V-22M	1	356742209R2
DG8257	C1372	C-CERA C	CK725F1A-105Z1	1	332181050R1
DG8257	C1373	C-CERA C	CK725F1A-105Z1	1	332181050R1
DG8257	C1374	C-CERA C	CK725F1A-105Z1	1	332181050R1
DG8257	C1375	C-CERA C	CK725F1A-105Z1	1	332181050R1
DG8257	C1376	C-CERA C	CK725F1A-105Z1	1	332181050R1
DG8257	C1377	C-CERA C	CK725F1A-105Z1	1	332181050R1
DG8257	C1378	C-CERA C	CK725F1A-105Z1	1	332181050R1
DG8257	C1379	C-CERA C	CC725CH1E-102J1	1	342111024R1
DG8257	C1380	C-CERA C	CK725F1A-105Z1	1	332181050R1
DG8257	C1381	C-CERA C	CK725F1A-105Z1	1	332181050R1
DG8257	C2001	C-CERA C	CK725F1A-105Z1	1	332181050R1
DG8257	C2002	C-CERA C	CK725F1A-105Z1	1	332181050R1

DG8257	C2003	C-CERA C	CK725F1A-105Z1	1	332181050R1
DG8257	C2004	C-CERA C	CK725F1A-105Z1	1	332181050R1
DG8257	C2005	C-CERA C	CK725F1A-105Z1	1	332181050R1
DG8257	C2006	C-CERA C	CK725F1A-105Z1	1	332181050R1
DG8257	C2007	C-CERA C	CK725F1A-105Z1	1	332181050R1
DG8257	C2008	C-CERA C	CK725F1A-105Z1	1	332181050R1
DG8257	C2009	C-CERA C	CK725F1A-105Z1	1	332181050R1
DG8257	C2010	C-CERA C	CK725F1A-105Z1	1	332181050R1
DG8257	C2011	C-CERA C	CK725F1A-105Z1	1	332181050R1
DG8257	C2012	C-CERA C	CK725F1A-105Z1	1	332181050R1
DG8257	C2013	C-CERA C	CK725F1A-105Z1	1	332181050R1
DG8257	C2014	C-CERA C	CK725F1A-105Z1	1	332181050R1
DG8257	C2015	CHIP ELECT C	CEWX4V-220M	1	3567A2219R2
DG8257	C2016	CHIP ELECT C	CEWX4V-220M	1	3567A2219R2
DG8257	C2017	C-CERA C	CK725F1A-105Z1	1	332181050R1
DG8257	C2018	CHIP ELECT C	CEWX4V-220M	1	3567A2219R2
DG8257	C2019	C-CERA C	CK725F1A-105Z1	1	332181050R1
DG8257	C2020	C-CERA C	CK725F1A-105Z1	1	332181050R1
DG8257	C2021	C-CERA C	CK725F1A-105Z1	1	332181050R1
DG8257	C2022	C-CERA C	CK725F1A-105Z1	1	332181050R1
DG8257	C2023	C-CERA C	CK725F1A-105Z1	1	332181050R1
DG8257	C2024	C-CERA C	CK725F1A-105Z1	1	332181050R1
DG8257	C2025	C-CERA C	CK725F1A-105Z1	1	332181050R1
DG8257	C2026	CHIP ELECT C	CEWX4V-220M	1	3567A2219R2
DG8257	C2027	CHIP ELECT C	CEWX4V-220M	1	3567A2219R2
DG8257-1A	C2028	CHIP ELECT C	CEWX16V-47M	1	356744709R2
DG8257	C2030	C-CERA C	CK725F1A-105Z1	1	332181050R1
DG8257	C2031	C-CERA C	CK725F1A-105Z1	1	332181050R1
DG8257-1A	C2032	C-CERA C	CK725F1A-105Z1	1	332181050R1
DG8257-1A	C2033	C-CERA C	CK725F1A-105Z1	1	332181050R1
DG8257	C2034	C-CERA C	CK725F1A-105Z1	1	332181050R1
DG8257	C2035	C-CERA C	CK725F1A-105Z1	1	332181050R1
DG8257	C2038	C-CERA C	CK725F1A-105Z1	1	332181050R1

DG8257	C2039	C-CERA C	CK725F1A-105Z1	1	332181050R1
DG8257	C2040	C-CERA C	CK725F1A-105Z1	1	332181050R1
DG8257	C2041	C-CERA C	CK725F1A-105Z1	1	332181050R1
DG8257	C2043	C-CERA C	CK725F1A-105Z1	1	332181050R1
DG8257	C2044	C-CERA C	CK725F1A-105Z1	1	332181050R1
DG8257	C2045	C-CERA C	CC725CH1E-102J1	1	342111024R1
DG8257	C2046	C-CERA C	CK725F1A-105Z1	1	332181050R1
DG8257	C2047	C-CERA C	CK725F1A-105Z1	1	332181050R1
DG8257	C2048	C-CERA C	CK725F1A-105Z1	1	332181050R1
DG8257	C2049	C-CERA C	CK725F1A-105Z1	1	332181050R1
DG8257	C2051	C-CERA C	CK725F1A-105Z1	1	332181050R1
DG8257	C2052	C-CERA C	CK725F1A-105Z1	1	332181050R1
DG8257	C2101	C-CERA C	CK725F1A-105Z1	1	332181050R1
DG8257	C2102	C-CERA C	CK725F1A-105Z1	1	332181050R1
DG8257	C2103	C-CERA C	CC725CH1E-102J1	1	342111024R1
DG8257	C2104	C-CERA C	CK725F1A-105Z1	1	332181050R1
DG8257	C2105	C-CERA C	CK725F1A-105Z1	1	332181050R1
DG8257	C2106	C-CERA C	CK725F1A-105Z1	1	332181050R1
DG8257	C2107	C-CERA C	CK725F1A-105Z1	1	332181050R1
DG8257	C2108	C-CERA C	CK725F1A-105Z1	1	332181050R1
DG8257	C2109	C-CERA C	CK725F1A-105Z1	1	332181050R1
DG8257	C2110	C-CERA C	CK725F1A-105Z1	1	332181050R1
DG8257	C2111	C-CERA C	CK725F1A-105Z1	1	332181050R1
DG8257	C2112	C-CERA C	CK725F1A-105Z1	1	332181050R1
DG8257	C2113	C-CERA C	CK725F1A-105Z1	1	332181050R1
DG8257	C2114	C-CERA C	CK725F1A-105Z1	1	332181050R1
DG8257	C2115	C-CERA C	CK725F1A-105Z1	1	332181050R1
DG8257	C2116	C-CERA C	CK725F1A-105Z1	1	332181050R1
DG8257	C2117	C-CERA C	CK725F1A-105Z1	1	332181050R1
DG8257	C2118	C-CERA C	CK725F1A-105Z1	1	332181050R1
DG8257	C2119	C-CERA C	CK725F1A-105Z1	1	332181050R1
DG8257	C2120	C-CERA C	CC725CH1E-102J1	1	342111024R1
DG8257	C2121	CHIP ELECT C	CEWX4V-220M	1	3567A2219R2

DG8257	C2122	C-CERA C	CK725F1A-105Z1	1	332181050R1
DG8257	C2123	C-CERA C	CK725F1A-105Z1	1	332181050R1
DG8257	C2124	C-CERA C	CK725F1A-105Z1	1	332181050R1
DG8257	C2125	C-CERA C	CK725F1A-105Z1	1	332181050R1
DG8257	C2126	C-CERA C	CK725F1A-105Z1	1	332181050R1
DG8257	C2127	C-CERA C	CK725F1A-105Z1	1	332181050R1
DG8257	C2128	C-CERA C	CK725F1A-105Z1	1	332181050R1
DG8257	C2129	CHIP ELECT C	CEWX4V-220M	1	3567A2219R2
DG8257	C2130	C-CERA C	CK725B1H-103K1	1	332101035R1
DG8257	C2131	C-CERA C	CK725B1A-474K1	1	332134745R1
DG8257	C2191	CHIP ELECT C	CEWX4V-220M	1	3567A2219R2
DG8257	C2192	C-CERA C	CK725F1A-105Z1	1	332181050R1
DG8257	C2193	C-CERA C	CK725F1A-105Z1	1	332181050R1
DG8257	C2601	CHIP ELECT C	CEWX16V-22M	1	356742209R2
DG8257	C2602	CHIP ELECT C	CEWX6.3V-100M	1	356721019R2
DG8257	C2603	C-CERA C	CK725F1A-105Z1	1	332181050R1
DG8257	C2604	C-CERA C	CK725F1A-105Z1	1	332181050R1
DG8257	C2605	C-CERA C	CK725F1A-105Z1	1	332181050R1
DG8257	C2606	C-CERA C	CC725CH1H-120J1	1	342101204R1
DG8257	C2608	C-CERA C	CC725CH1H-120J1	1	342101204R1
DG8257	C2610	C-CERA C	CK725F1A-105Z1	1	332181050R1
DG8257	C2611	C-CERA C	CK725F1A-105Z1	1	332181050R1
DG8257	C2612	C-CERA C	CC725CH1H-560J1	1	342105604R1
DG8257	C2901	CHIP ELECT C	CEWX6.3V-100M	1	356721019R2
DG8257	C2902	CHIP ELECT C	CEWX4V-220M	1	3567A2219R2
DG8257	C2903	CHIP ELECT C	CEWX4V-220M	1	3567A2219R2
DG8257	C2904	CHIP ELECT C	CEWX4V-220M	1	3567A2219R2
DG8257	C2905	CHIP ELECT C	CEWX4V-220M	1	3567A2219R2
DG8257	C2906	CHIP ELECT C	CEWX4V-220M	1	3567A2219R2
DG8257	C2907	CHIP ELECT C	CEWX16V-10M	1	356741009R2
DG8257	C2908	CHIP ELECT C	CEWX4V-220M	1	3567A2219R2
DG8257	C2909	CHIP ELECT C	CEWX6.3V-100M	1	356721019R2
DG8257	C2910	CHIP ELECT C	CEWX4V-220M	1	3567A2219R2

DG8257	D1301	LED	SEC1801C	1	225386R2
DG8257	D2101	C-DIODE	1SS352	1	223234R2
DG8257	D2901	LED	SEC1801C	1	225386R2
DG8257	L1001	CHOKE COIL	NCH-1479	1	231237K470R2
DG8257	L1002	CHOKE COIL	NCH-1479	1	231237K470R2
DG8257	L1003	CHOKE COIL	NCH-1471	1	231237M022R2
DG8257	L1004	CHOKE COIL	NCH-1471	1	231237M022R2
DG8257	L1005	CHOKE COIL	NCH-1471	1	231237M022R2
DG8257	L1201	CHOKE COIL	NCH-1471	1	231237M022R2
DG8257	L1202	CHOKE COIL	NCH-1471	1	231237M022R2
DG8257	L1203	CHOKE COIL	NCH-1471	1	231237M022R2
DG8257	L1204	CHOKE COIL	NCH-1471	1	231237M022R2
DG8257	L1251	CHOKE COIL	NCH-1471	1	231237M022R2
DG8257	L1301	CHOKE COIL	NCH-1471	1	231237M022R2
DG8257	L1302	CHOKE COIL	NCH-1471	1	231237M022R2
DG8257	L1303	CHOKE COIL	NCH-1471	1	231237M022R2
DG8257	L1304	CHOKE COIL	NCH-1471	1	231237M022R2
DG8257	L1305	CHOKE COIL	NCH-1471	1	231237M022R2
DG8257	L1306	CHOKE COIL	NCH-1471	1	231237M022R2
DG8257	L1307	CHOKE COIL	NCH-1471	1	231237M022R2
DG8257	L1371	CHOKE COIL	NCH-1471	1	231237M022R2
DG8257	L2001	CHOKE COIL	NCH-1471	1	231237M022R2
DG8257	L2002	CHOKE COIL	NCH-1471	1	231237M022R2
DG8257	L2003	CHOKE COIL	NCH-1471	1	231237M022R2
DG8257	L2004	CHOKE COIL	NCH-1471	1	231237M022R2
DG8257	L2005	CHOKE COIL	NCH-1471	1	231237M022R2
DG8257	L2101	CHOKE COIL	NCH-1471	1	231237M022R2
DG8257	L2102	CHOKE COIL	NCH-1471	1	231237M022R2
DG8257	L2601	CHOKE COIL	NCH-1473	1	231237M047R2
DG8257	L2602	CHOKE COIL	NCH-1473	1	231237M047R2
DG8257	L2901	CHOKE COIL	NCH-1471	1	231237M022R2
DG8257	L2902	CHOKE COIL	NCH-1471	1	231237M022R2
DG8257	L2903	CHOKE COIL	NCH-1471	1	231237M022R2

DG8257	P1001	SOCKET	NSCT-26P2671	1	25052775R2		
DG8257	P1101	PLUG	NPLG-6P932	1	25055979R2		
DG8257-1A	P1301A	PLUG	SM16B-SURS-TF	1	25056399R2	N	IEEEout
DG8257	P1302A	PLUG	SM20B-SURS-TF	1	25056401R2	N	
DG8257	P2001A	PLUG	SM14B-SURS-TF	1	25056397R2	N	
DG8257	P2002A	PLUG	SM15B-SURS-TF	1	25056398R2	N	
DG8257	P2003A	PLUG	SM20B-SURS-TF	1	25056401R2	N	INT-ENC
DG8257	P2004A	PLUG	SM16B-SURS-TF	1	25056399R2	N	
DG8257	P2101	SOCKET	NSCT-14P2665	1	25052769R2		
DG8257	P2701A	PLUG	NPLG-7P933	1	25055980R2		
DG8257	P2901A	PLUG	NPLG-6P932	1	25055979R2		
DG8257	Q1001	IC	CXD1881BR	1	22241902R3		
DG8257	Q1002	IC	NJM2115V	1	22241676R2		
DG8257	Q1003	TR	2SK3019	1	2216520R2		
DG8257	Q1004	TR	2SK3019	1	2216520R2		
DG8257	Q1005	TR	2SK3019	1	2216520R2		
DG8257	Q1006	TR	2SB1132	1	2216400R2		
DG8257	Q1007	TR	2SB1132	1	2216400R2		
DG8257	Q1101	IC	FAN8042	1	22241905R3		
DG8257	Q1102	IC	BA4510FV	1	22241907R2		
DG8257	Q1201	IC	CXD1885Q	1	22241903R3		
DG8257	Q1202	IC	74LVC1G08GW	1	22242071R2PH	N	
DG8257	Q1202 or	IC	TC7SZ08FU	(1)	22242071R2TO	N	
DG8257	Q1251	IC	IC41LV16100-50T	1	22241909R2		
DG8257	Q1251 or	IC	IC41LV16100-50T	(1)	22241909R3		
DG8257	Q1301	IC	CXD2753R	1	22241829R3		
DG8257	Q1302	IC	AD8062	1	22242066R2	N	
DG8257	Q1303	IC	IC42S16100-7T	1	22242046R3	N	
DG8257	Q1303 or	IC	IC42S16100-7T	(1)	22242046R2	N	
DG8257	Q1304	IC	TC7SZU04F	1	22242073R2TO	N	
DG8257	Q1305	IC	74LVC2G241DP	1	22242076R2PH	N	
DG8257	Q1305 or	IC	TC7WH241FU	(1)	22242076R2TO	N	
DG8257	Q1306	TR	2SK3019	1	2216520R2		

DG8257	Q1307	IC	TC7SZ08FU	1	22242071R2TO	N
DG8257	Q1308	IC	TC7SZ08FU	1	22242071R2TO	N
DG8257	Q1309	IC	TC7SZ08FU	1	22242071R2TO	N
DG8257	Q1310	IC	TC7SZ125FU	1	22241895R2	
DG8257	Q1371	IC	EPM3128A-Harmony-8LI	1	22242067R3	N
DG8257	Q2001	IC	M65776CFP	1	22242044R3	N
DG8257	Q2002	IC	IC42S16400-7T	1	22241910R2	
DG8257	Q2002 or	IC	IC42S16400-7T	(1)	22241910R3	
DG8257	Q2007	IC	74LVC2G241DP	1	22242076R2PH	N
DG8257	Q2007 or	IC	TC7WH241FU	(1)	22242076R2TO	N
DG8257	Q2008	IC	TC7SZ125FU	1	22241895R2	
DG8257	Q2101	IC	M32102S6FP	1	22242045R3	N
DG8257	Q2102	IC	TC74VHCT374AFT	1	22274374GR2TO	
DG8257	Q2103	IC	74LVC1G32GW	1	22242077R2PH	N
DG8257	Q2103 or	IC	TC7SZ32FU	(1)	22242077R2TO	N
DG8257	Q2104	IC	BR24L08FV-W	1	22242070R2	N
DG8257	Q2105	IC	74LVC1G04GW	1	22242074R2PH	N
DG8257	Q2105 or	IC	TC7SZ04FU	(1)	22242074R2TO	N
DG8257	Q2106	IC	MX29LV320BTC-90 (0102)	1	22241862R301020	
DG8257	Q2107	IC	S-80127CNMC-JKM-T2	1	22241642R2	
DG8257	Q2108	IC	TC7SZ125FU	1	22241895R2	
DG8257	Q2109	IC	74AHCT125PW	1	22241894R2PH	N
DG8257	Q2191	IC	NJM2880U25	1	22242085R2	N
DG8257	Q2601	IC	BU2288FV	1	22241911R2	
DG8257	Q2901	IC	BA33B00FP	1	22242086R2	N
DG8257	Q2902	IC	LM1117MPX-ADJ	1	22241648R2	
DG8257	Q2903	IC(REGURATOR)	MPC2918T	1	22278018ER2NE	
DG8257	R1001	C-R NET	RM7LJ152X04	1	43484715204R2	N
DG8257	R1002	C-R NET	RM7LJ000X04	1	43484700004R2	N
DG8257	R1003	C-CARBON R	RN72K1J-123FE	1	435031232R1	
DG8257	R1004	C-CARBON R	RN72K1J-103JE	1	435031034R1	
DG8257	R1005	C-CARBON R	RN72K1J-223JE	1	435032234R1	
DG8257	R1006	C-CARBON R	RN72K1J-223JE	1	435032234R1	

DG8257	R1007	C-CARBON R	RN72K1J-223JE	1	435032234R1
DG8257	R1009	C-CARBON R	RN72K1J-103JE	1	435031034R1
DG8257	R1010	C-CARBON R	RN72K1J-223JE	1	435032234R1
DG8257	R1011	C-CARBON R	RN72K1J-223JE	1	435032234R1
DG8257	R1012	C-CARBON R	RN72K1J-223JE	1	435032234R1
DG8257	R1014	C-CARBON R	RN72K1J-103JE	1	435031034R1
DG8257	R1015	C-CARBON R	RN72K1J-102JE	1	435031024R1
DG8257	R1016	C-CARBON R	RN72K1J-330JE	1	435033304R1
DG8257	R1017	C-CARBON R	RN72K1J-330JE	1	435033304R1
DG8257	R1018	C-CARBON R	RN72K1J-102JE	1	435031024R1
DG8257	R1019	C-CARBON R	RN72K1J-330JE	1	435033304R1
DG8257	R1020	C-CARBON R	RN72K1J-330JE	1	435033304R1
DG8257	R1021	C-CARBON R	RN72K1J-000JE	1	435030004R1
DG8257	R1022	C-CARBON R	RN72K1J-101JE	1	435031014R1
DG8257	R1023	C-CARBON R	RN72K1J-000JE	1	435030004R1
DG8257	R1027	C-CARBON R	RN72K1J-102JE	1	435031024R1
DG8257	R1028	C-CARBON R	RN72K1J-392JE	1	435033924R1
DG8257	R1029	C-CARBON R	RN72K1J-104JE	1	435031044R1
DG8257	R1101	C-CARBON R	RN72K1J-563FE	1	435035632R1
DG8257	R1102	C-CARBON R	RN72K1J-153JE	1	435031534R1
DG8257	R1103	C-CARBON R	RN72K1J-563JE	1	435035634R1
DG8257	R1104	C-CARBON R	RN72K1J-333JE	1	435033334R1
DG8257	R1105	C-CARBON R	RN72K1J-563JE	1	435035634R1
DG8257	R1106	C-CARBON R	RN72K1J-333JE	1	435033334R1
DG8257	R1107	C-CARBON R	RN72K1J-000JE	1	435030004R1
DG8257	R1108	C-CARBON R	RN72K1J-103JE	1	435031034R1
DG8257	R1109	C-CARBON R	RN72K1J-103JE	1	435031034R1
DG8257	R1110	C-CARBON R	RN72K1J-103JE	1	435031034R1
DG8257	R1111	C-CARBON R	RN72K1J-103JE	1	435031034R1
DG8257	R1112	C-CARBON R	RN72K1J-000JE	1	435030004R1
DG8257	R1113	C-CARBON R	RN72K1J-333JE	1	435033334R1
DG8257	R1114	C-CARBON R	RN72K1J-752JE	1	435037524R1
DG8257	R1115	C-CARBON R	RN72K1J-333JE	1	435033334R1

DG8257	R1116	C-CARBON R	RN72K1J-752JE	1	435037524R1	
DG8257	R1117	C-CARBON R	RN72K1J-103FE	1	435031032R1	
DG8257	R1118	C-CARBON R	RN72K1J-103FE	1	435031032R1	
DG8257	R1119	C-CARBON R	RN72K1J-223JE	1	435032234R1	
DG8257	R1120	C-CARBON R	RN72K1J-103JE	1	435031034R1	
DG8257	R1121	C-CARBON R	RN72K1J-103JE	1	435031034R1	
DG8257	R1122	C-CARBON R	RN72K1J-104JE	1	435031044R1	
DG8257	R1123	C-CARBON R	RN72K1J-223JE	1	435032234R1	
DG8257	R1124	C-CARBON R	RN72K1J-103JE	1	435031034R1	
DG8257	R1125	C-CARBON R	RN72K1J-103JE	1	435031034R1	
DG8257	R1126	C-CARBON R	RN72K1J-104JE	1	435031044R1	
DG8257	R1127	C-CARBON R	RN72K1J-000JE	1	435030004R1	
DG8257	R1128	C-CARBON R	RN72K1J-000JE	1	435030004R1	
DG8257	R1202	C-CARBON R	RN72K1J-000JE	1	435030004R1	
DG8257	R1205	C-R NET	RM7LJ101X04	1	43484710104R2	N
DG8257	R1206	C-R NET	RM7LJ101X04	1	43484710104R2	N
DG8257	R1207	C-CARBON R	RN72K1J-181JE	1	435031814R1	
DG8257	R1208	C-R NET	RM7LJ101X04	1	43484710104R2	N
DG8257	R1209	C-R NET	RM7LJ330X04	1	43484733004R2	N
DG8257	R1210	C-R NET	RM7LJ101X04	1	43484710104R2	N
DG8257	R1211	C-R NET	RM7LJ101X04	1	43484710104R2	N
DG8257	R1212	C-R NET	RM7LJ181X04	1	43484718104R2	N
DG8257	R1213	C-R NET	RM7LJ103X04	1	43484710304R2	N
DG8257	R1214	C-CARBON R	RN72K1J-473FE	1	435034732R1	
DG8257	R1215	C-CARBON R	RN72K1J-473FE	1	435034732R1	
DG8257	R1216	C-CARBON R	RN72K1J-154FE	1	435031542R1	
DG8257	R1217	C-CARBON R	RN72K1J-471FE	1	435034712R1	
DG8257	R1218	C-CARBON R	RN72K1J-683FE	1	435036832R1	
DG8257	R1219	C-CARBON R	RN72K1J-473FE	1	435034732R1	
DG8257	R1220	C-CARBON R	RN72K1J-104FE	1	435031042R1	
DG8257	R1221	C-CARBON R	RN72K1J-182FE	1	435031822R1	
DG8257	R1222	C-CARBON R	RN72K1J-182FE	1	435031822R1	
DG8257	R1223	C-CARBON R	RN72K1J-223FE	1	435032232R1	

DG8257	R1224	C-CARBON R	RN72K1J-000JE	1	435030004R1	
DG8257	R1225	C-CARBON R	RN72K1J-103JE	1	435031034R1	
DG8257	R1226	C-CARBON R	RN72K1J-000JE	1	435030004R1	
DG8257	R1227	C-CARBON R	RN72K1J-103JE	1	435031034R1	
DG8257	R1228	C-CARBON R	RN72K1J-000JE	1	435030004R1	
DG8257	R1229	C-CARBON R	RN72K1J-000JE	1	435030004R1	
DG8257	R1230	C-CARBON R	RN72K1J-000JE	1	435030004R1	
DG8257	R1231	C-CARBON R	RN72K1J-333JE	1	435033334R1	
DG8257	R1232	C-CARBON R	RN72K1J-152JE	1	435031524R1	
DG8257	R1233	C-CARBON R	RN72K1J-333JE	1	435033334R1	
DG8257	R1234	C-R NET	RM7LJ101X04	1	43484710104R2	N
DG8257	R1235	C-R NET	RM7LJ101X04	1	43484710104R2	N
DG8257	R1236	C-R NET	RM7LJ101X04	1	43484710104R2	N
DG8257	R1237	C-R NET	RM7LJ101X04	1	43484710104R2	N
DG8257	R1238	C-R NET	RM7LJ101X04	1	43484710104R2	N
DG8257	R1239	C-CARBON R	RN72K1J-220JE	1	435032204R1	
DG8257	R1240	C-CARBON R	RN72K1J-103JE	1	435031034R1	
DG8257	R1241	C-R NET	RM7LJ101X04	1	43484710104R2	N
DG8257	R1242	C-CARBON R	RN72K1J-000JE	1	435030004R1	
DG8257	R1243	C-CARBON R	RN72K1J-000JE	1	435030004R1	
DG8257	R1244	C-CARBON R	RN72K1J-000JE	1	435030004R1	
DG8257	R1251	C-R NET	RM7LJ101X04	1	43484710104R2	N
DG8257	R1252	C-R NET	RM7LJ101X04	1	43484710104R2	N
DG8257	R1253	C-R NET	RM7LJ101X04	1	43484710104R2	N
DG8257	R1254	C-R NET	RM7LJ101X04	1	43484710104R2	N
DG8257	R1291	C-R NET	RM6KJ103X08	1	43474610308R1	
DG8257	R1292	C-R NET	RM6KJ103X08	1	43474610308R1	
DG8257	R1293	C-R NET	RM6KJ103X08	1	43474610308R1	
DG8257	R1301	C-CARBON R	RN72K1J-470JE	1	435034704R1	
DG8257	R1302	C-CARBON R	RN72K1J-470JE	1	435034704R1	
DG8257	R1303	C-CARBON R	RN72K1J-470JE	1	435034704R1	
DG8257	R1304	C-CARBON R	RN72K1J-470JE	1	435034704R1	
DG8257	R1305	C-CARBON R	RN72K1J-470JE	1	435034704R1	

DG8257	R1306	C-CARBON R	RN72K1J-103JE	1	435031034R1	
DG8257	R1307	C-CARBON R	RN72K1J-102JE	1	435031024R1	
DG8257	R1308	C-CARBON R	RN72K1J-000JE	1	435030004R1	
DG8257	R1309	C-CARBON R	RN72K1J-220JE	1	435032204R1	
DG8257	R1310	C-CARBON R	RN72K1J-000JE	1	435030004R1	
DG8257	R1311	C-CARBON R	RN72K1J-000JE	1	435030004R1	
DG8257	R1312	C-CARBON R	RN72K1J-000JE	1	435030004R1	
DG8257	R1313	C-CARBON R	RN72K1J-220JE	1	435032204R1	
DG8257	R1314	C-CARBON R	RN72K1J-220JE	1	435032204R1	
DG8257	R1315	C-CARBON R	RN72K1J-000JE	1	435030004R1	
DG8257	R1316	C-CARBON R	RN72K1J-000JE	1	435030004R1	
DG8257	R1317	C-CARBON R	RN72K1J-000JE	1	435030004R1	
DG8257	R1318	C-CARBON R	RN72K1J-000JE	1	435030004R1	
DG8257	R1319	C-CARBON R	RN72K1J-000JE	1	435030004R1	
DG8257	R1320	C-CARBON R	RN72K1J-000JE	1	435030004R1	
DG8257	R1321	C-R NET	RM7LJ220X04	1	43484722004R2	N
DG8257	R1322	C-R NET	RM7LJ220X04	1	43484722004R2	N
DG8257	R1323	C-CARBON R	RN72K1J-103JE	1	435031034R1	
DG8257	R1324	C-CARBON R	RN72K1J-103JE	1	435031034R1	
DG8257	R1325	C-R NET	RM7LJ470X04	1	43484747004R2	N
DG8257	R1326	C-R NET	RM7LJ470X04	1	43484747004R2	N
DG8257	R1327	C-R NET	RM7LJ470X04	1	43484747004R2	N
DG8257	R1328	C-R NET	RM7LJ103X04	1	43484710304R2	N
DG8257	R1329	C-R NET	RM7LJ103X04	1	43484710304R2	N
DG8257	R1330	C-CARBON R	RN72K1J-220JE	1	435032204R1	
DG8257	R1331	C-CARBON R	RN72K1J-220JE	1	435032204R1	
DG8257	R1332	C-CARBON R	RN72K1J-220JE	1	435032204R1	
DG8257	R1333	C-CARBON R	RN72K1J-220JE	1	435032204R1	
DG8257	R1334	C-CARBON R	RN72K1J-220JE	1	435032204R1	
DG8257	R1335	C-R NET	RM7LJ470X04	1	43484747004R2	N
DG8257	R1336	C-R NET	RM7LJ470X04	1	43484747004R2	N
DG8257	R1337	C-R NET	RM7LJ470X04	1	43484747004R2	N
DG8257	R1338	C-CARBON R	RN72K1J-102JE	1	435031024R1	

DG8257	R1339	C-CARBON R	RN72K1J-103FE	1	435031032R1	
DG8257	R1340	C-CARBON R	RN72K1J-103FE	1	435031032R1	
DG8257	R1341	C-CARBON R	RN72K1J-202JE	1	435032024R1	
DG8257	R1342	C-CARBON R	RN72K1J-222JE	1	435032224R1	
DG8257	R1343	C-CARBON R	RN72K1J-202JE	1	435032024R1	
DG8257	R1344	C-CARBON R	RN72K1J-222JE	1	435032224R1	
DG8257	R1345	C-CARBON R	RN72K1J-105JE	1	435031054R1	
DG8257	R1346	C-CARBON R	RN72K1J-821FE	1	435038212R1	
DG8257	R1347	C-CARBON R	RN72K1J-220JE	1	435032204R1	
DG8257	R1348	C-CARBON R	RN72K1J-220JE	1	435032204R1	
DG8257	R1349	C-CARBON R	RN72K1J-220JE	1	435032204R1	
DG8257	R1350	C-CARBON R	RN72K1J-220JE	1	435032204R1	
DG8257	R1351	C-CARBON R	RN72K1J-101JE	1	435031014R1	
DG8257	R1354	C-CARBON R	RN72K1J-000JE	1	435030004R1	
DG8257	R1355	C-CARBON R	RN72K1J-000JE	1	435030004R1	
DG8257	R1356	C-CARBON R	RN72K1J-000JE	1	435030004R1	
DG8257	R1357	C-CARBON R	RN72K1J-101JE	1	435031014R1	
DG8257	R1358	C-CARBON R	RN72K1J-100JE	1	435031004R1	
DG8257	R1359	C-CARBON R	RN72K1J-100JE	1	435031004R1	
DG8257	R1360	C-CARBON R	RN72K1J-000JE	1	435030004R1	
DG8257	R1361	C-CARBON R	RN72K1J-000JE	1	435030004R1	
DG8257	R1362	C-CARBON R	RN72K1J-000JE	1	435030004R1	
DG8257	R1363	C-CARBON R	RN72K1J-470JE	1	435034704R1	
DG8257	R1371	C-CARBON R	RN72K1J-470JE	1	435034704R1	
DG8257	R1374	C-CARBON R	RN72K1J-000JE	1	435030004R1	
DG8257	R1375	C-R NET	RM7LJ103X04	1	43484710304R2	N
DG8257	R1376	C-R NET	RM7LJ101X04	1	43484710104R2	N
DG8257	R1377	C-R NET	RM7LJ101X04	1	43484710104R2	N
DG8257	R1378	C-CARBON R	RN72K1J-101JE	1	435031014R1	
DG8257	R1379	C-CARBON R	RN72K1J-101JE	1	435031014R1	
DG8257	R1380	C-CARBON R	RN72K1J-101JE	1	435031014R1	
DG8257	R1381	C-CARBON R	RN72K1J-101JE	1	435031014R1	
DG8257	R1382	C-CARBON R	RN72K1J-220JE	1	435032204R1	

DG8257	R1383	C-CARBON R	RN72K1J-101JE	1	435031014R1		
DG8257	R1384	C-CARBON R	RN72K1J-470JE	1	435034704R1		
DG8257	R1387	C-R NET	RM7LJ101X04	1	43484710104R2	N	
DG8257	R1388	C-CARBON R	RN72K1J-000JE	1	435030004R1		
DG8257	R1389	C-CARBON R	RN72K1J-102JE	1	435031024R1		
DG8257	R1390	C-R NET	RM7LJ101X04	1	43484710104R2	N	
DG8257	R1391	C-CARBON R	RN72K1J-101JE	1	435031014R1		
DG8257	R1393	C-CARBON R	RN72K1J-101JE	1	435031014R1		
DG8257	R2001	C-CARBON R	RN72K1J-103JE	1	435031034R1		
DG8257	R2002	C-CARBON R	RN72K1J-103JE	1	435031034R1		
DG8257	R2003	C-R NET	RM7LJ150X04	1	43484715004R2	N	
DG8257	R2004	C-R NET	RM7LJ150X04	1	43484715004R2	N	
DG8257	R2005	C-R NET	RM7LJ150X04	1	43484715004R2	N	
DG8257	R2006	C-R NET	RM7LJ150X04	1	43484715004R2	N	
DG8257	R2007	C-CARBON R	RN72K1J-150JE	1	435031504R1		
DG8257	R2009	C-CARBON R	RN72K1J-150JE	1	435031504R1		
DG8257	R2010	C-CARBON R	RN72K1J-150JE	1	435031504R1		
DG8257	R2011	C-CARBON R	RN72K1J-150JE	1	435031504R1		
DG8257	R2012	C-CARBON R	RN72K1J-150JE	1	435031504R1		
DG8257	R2013	C-CARBON R	RN72K1J-150JE	1	435031504R1		
DG8257	R2014	C-CARBON R	RN72K1J-150JE	1	435031504R1		
DG8257	R2015	C-R NET	RM7LJ150X04	1	43484715004R2	N	
DG8257	R2016	C-R NET	RM7LJ150X04	1	43484715004R2	N	
DG8257	R2017	C-R NET	RM7LJ150X04	1	43484715004R2	N	
DG8257	R2018	C-R NET	RM7LJ150X04	1	43484715004R2	N	
DG8257	R2019	C-CARBON R	RN72K1J-000JE	1	435030004R1		
DG8257-1A	R2023	C-CARBON R	RN72K1J-000JE	1	435030004R1		INT-ENC/0
DG8257	R2024	C-CARBON R	RN72K1J-000JE	1	435030004R1		
DG8257	R2025	C-CARBON R	RN72K1J-000JE	1	435030004R1		
DG8257-1A	R2030	C-CARBON R	RN72K1J-102JE	1	435031024R1		INT-ENC/0
DG8257-1A	R2031	C-CARBON R	RN72K1J-102JE	1	435031024R1		INT-ENC/0
DG8257	R2041	C-CARBON R	RN72K1J-000JE	1	435030004R1		
DG8257	R2042	C-CARBON R	RN72K1J-000JE	1	435030004R1		

DG8257	R2043	C-CARBON R	RN72K1J-000JE	1	435030004R1	
DG8257	R2047	C-CARBON R	RN72K1J-220JE	1	435032204R1	
DG8257	R2048	C-R NET	RM7LJ220X04	1	43484722004R2	N
DG8257	R2049	C-CARBON R	RN72K1J-220JE	1	435032204R1	
DG8257	R2050	C-CARBON R	RN72K1J-220JE	1	435032204R1	
DG8257	R2051	C-CARBON R	RN72K1J-000JE	1	435030004R1	
DG8257	R2052	C-CARBON R	RN72K1J-220JE	1	435032204R1	
DG8257	R2053	C-CARBON R	RN72K1J-220JE	1	435032204R1	
DG8257	R2054	C-CARBON R	RN72K1J-103JE	1	435031034R1	
DG8257	R2055	C-CARBON R	RN72K1J-220JE	1	435032204R1	
DG8257	R2056	C-CARBON R	RN72K1J-220JE	1	435032204R1	
DG8257	R2058	EMIFIL	BK1608LL241-T	1	230959R1	
DG8257	R2059	C-R NET	RM7LJ150X04	1	43484715004R2	N
DG8257	R2060	C-R NET	RM7LJ150X04	1	43484715004R2	N
DG8257	R2061	C-CARBON R	RN72K1J-000JE	1	435030004R1	
DG8257	R2062	C-CARBON R	RN72K1J-000JE	1	435030004R1	
DG8257	R2063	C-CARBON R	RN72K1J-102JE	1	435031024R1	
DG8257	R2064	C-CARBON R	RN72K1J-220JE	1	435032204R1	
DG8257	R2065	C-CARBON R	RN72K1J-101JE	1	435031014R1	
DG8257	R2066	C-CARBON R	RN72K1J-000JE	1	435030004R1	
DG8257	R2067	C-CARBON R	RN72K1J-101JE	1	435031014R1	
DG8257	R2068	C-CARBON R	RN72K1J-220JE	1	435032204R1	
DG8257	R2069	C-CARBON R	RN72K1J-000JE	1	435030004R1	
DG8257	R2101	C-CARBON R	RN72K1J-103JE	1	435031034R1	
DG8257	R2102	C-CARBON R	RN72K1J-101JE	1	435031014R1	
DG8257	R2103	C-R NET	RM7LJ470X04	1	43484747004R2	N
DG8257	R2104	C-R NET	RM7LJ470X04	1	43484747004R2	N
DG8257	R2105	C-R NET	RM7LJ103X04	1	43484710304R2	N
DG8257	R2106	C-CARBON R	RN72K1J-273JE	1	435032734R1	
DG8257	R2107	C-CARBON R	RN72K1J-471JE	1	435034714R1	
DG8257	R2108	C-CARBON R	RN72K1J-105JE	1	435031054R1	
DG8257	R2109	C-CARBON R	RN72K1J-220JE	1	435032204R1	
DG8257	R2110	C-CARBON R	RN72K1J-220JE	1	435032204R1	

DG8257	R2111	C-CARBON R	RN72K1J-220JE	1	435032204R1	
DG8257	R2112	C-CARBON R	RN72K1J-220JE	1	435032204R1	
DG8257	R2113	C-R NET	RM7LJ220X04	1	43484722004R2	N
DG8257	R2114	C-R NET	RM7LJ470X04	1	43484747004R2	N
DG8257	R2115	C-CARBON R	RN72K1J-220JE	1	435032204R1	
DG8257	R2116	C-CARBON R	RN72K1J-220JE	1	435032204R1	
DG8257	R2117	C-CARBON R	RN72K1J-220JE	1	435032204R1	
DG8257	R2118	C-CARBON R	RN72K1J-220JE	1	435032204R1	
DG8257	R2119	C-CARBON R	RN72K1J-220JE	1	435032204R1	
DG8257	R2120	C-CARBON R	RN72K1J-220JE	1	435032204R1	
DG8257	R2121	C-CARBON R	RN72K1J-220JE	1	435032204R1	
DG8257	R2122	C-CARBON R	RN72K1J-220JE	1	435032204R1	
DG8257	R2123	C-CARBON R	RN72K1J-220JE	1	435032204R1	
DG8257	R2124	C-CARBON R	RN72K1J-220JE	1	435032204R1	
DG8257	R2125	C-CARBON R	RN72K1J-220JE	1	435032204R1	
DG8257	R2126	C-R NET	RM7LJ470X04	1	43484747004R2	N
DG8257	R2127	C-CARBON R	RN72K1J-470JE	1	435034704R1	
DG8257	R2128	C-CARBON R	RN72K1J-470JE	1	435034704R1	
DG8257	R2129	C-CARBON R	RN72K1J-470JE	1	435034704R1	
DG8257	R2130	C-CARBON R	RN72K1J-470JE	1	435034704R1	
DG8257	R2131	C-CARBON R	RN72K1J-470JE	1	435034704R1	
DG8257	R2132	C-CARBON R	RN72K1J-470JE	1	435034704R1	
DG8257	R2133	C-CARBON R	RN72K1J-222JE	1	435032224R1	
DG8257	R2134	C-CARBON R	RN72K1J-222JE	1	435032224R1	
DG8257	R2135	C-CARBON R	RN72K1J-000JE	1	435030004R1	
DG8257	R2136	C-CARBON R	RN72K1J-000JE	1	435030004R1	
DG8257	R2137	C-R NET	RM7LJ150X04	1	43484715004R2	N
DG8257	R2138	C-R NET	RM7LJ150X04	1	43484715004R2	N
DG8257	R2139	C-R NET	RM7LJ150X04	1	43484715004R2	N
DG8257	R2140	C-R NET	RM7LJ150X04	1	43484715004R2	N
DG8257	R2141	C-CARBON R	RN72K1J-103JE	1	435031034R1	
DG8257	R2142	C-CARBON R	RN72K1J-103JE	1	435031034R1	
DG8257	R2143	C-CARBON R	RN72K1J-103JE	1	435031034R1	

DG8257	R2144	C-CARBON R	RN72K1J-220JE	1	435032204R1	
DG8257	R2145	C-CARBON R	RN72K1J-470JE	1	435034704R1	
DG8257	R2146	C-CARBON R	RN72K1J-470JE	1	435034704R1	
DG8257	R2147	C-CARBON R	RN72K1J-470JE	1	435034704R1	
DG8257	R2148	C-CARBON R	RN72K1J-220JE	1	435032204R1	
DG8257	R2149	C-R NET	RM7LJ470X04	1	43484747004R2	N
DG8257	R2150	C-CARBON R	RN72K1J-220JE	1	435032204R1	
DG8257	R2151	C-R NET	RM7LJ150X04	1	43484715004R2	N
DG8257	R2152	C-R NET	RM7LJ150X04	1	43484715004R2	N
DG8257	R2153	C-R NET	RM7LJ150X04	1	43484715004R2	N
DG8257	R2154	C-R NET	RM7LJ150X04	1	43484715004R2	N
DG8257	R2155	C-R NET	RM7LJ150X04	1	43484715004R2	N
DG8257	R2156	C-CARBON R	RN72K1J-150JE	1	435031504R1	
DG8257	R2157	C-CARBON R	RN72K1J-470JE	1	435034704R1	
DG8257	R2158	C-CARBON R	RN72K1J-472JE	1	435034724R1	
DG8257	R2159	C-CARBON R	RN72K1J-103JE	1	435031034R1	
DG8257	R2160	C-CARBON R	RN72K1J-103JE	1	435031034R1	
DG8257	R2161	C-CARBON R	RN72K1J-102JE	1	435031024R1	
DG8257	R2162	C-CARBON R	RN72K1J-472JE	1	435034724R1	
DG8257	R2163	C-CARBON R	RN72K1J-000JE	1	435030004R1	
DG8257	R2164	C-CARBON R	RN72K1J-220JE	1	435032204R1	
DG8257	R2165	C-CARBON R	RN72K1J-220JE	1	435032204R1	
DG8257	R2166	C-CARBON R	RN72K1J-220JE	1	435032204R1	
DG8257	R2167	C-CARBON R	RN72K1J-220JE	1	435032204R1	
DG8257	R2168	C-CARBON R	RN72K1J-000JE	1	435030004R1	
DG8257	R2169	C-CARBON R	RN72K1J-000JE	1	435030004R1	
DG8257	R2191	C-CARBON R	RN72K1J-103JE	1	435031034R1	
DG8257	R2601	C-CARBON R	RN72K1J-561FE	1	435035612R1	
DG8257	R2602	C-CARBON R	RN72K1J-220JE	1	435032204R1	
DG8257	R2603	C-CARBON R	RN72K1J-101JE	1	435031014R1	
DG8257	R2604	C-CARBON R	RN72K1J-101JE	1	435031014R1	
DG8257	R2605	C-CARBON R	RN72K1J-220JE	1	435032204R1	
DG8257	R2608	C-CARBON R	RN72K1J-000JE	1	435030004R1	

DG8257	R2609	C-CARBON R	RN72K1J-000JE	1	435030004R1	
DG8257	R2901	C-CARBON R	RN72K1J-000JE	1	435030004R1	
DG8257	R2902	C-CARBON R	RN72K1J-000JE	1	435030004R1	
DG8257	R2903	C-CARBON R	RN72K1J-000JE	1	435030004R1	
DG8257	R2906	C-CARBON R	RN72K1J-102JE	1	435031024R1	
DG8257	R2907	C-CARBON R	RN72K1J-333FE	1	435033332R1	
DG8257	R2908	C-CARBON R	RN72K1J-133FE	1	435031332R1	
DG8257	R2909	C-CARBON R	RN72K1J-911FE	1	435039112R1	N
DG8257	R2910	C-CARBON R	RN72K1J-121FE	1	435031212R1	
DG8257	R2911	C-CARBON R	RN72K1J-121FE	1	435031212R1	
DG8257	X1301	CRYSTAL	FCX03-33.868MHz	1	3010391R2	N
DG8257	X2601	CRYSTAL	FCX-03-27MHz	1	3010353R2	

PRINTED CIRCUIT BOARD PARTS LIST

DV-SP1000

U02: VIDEO OUTPUT TERMINAL PC BOARD NAVD-8258

U03: DVD MAIN CPU PC BOARD NADG-8259

U04: COMPONENT OUTPUT TERMINAL PC BOARD NAETC-8260 <WT3P><PP2P><GR6P>

U05: COMPONENT OUTPUT TERMINAL PC BOARD NAETC-8261 <DC1N>

U06: POWER SUPPLY PC BOARD-3 NAPS-8274DVD MAIN CPU PC BOARD NADG-8259

PWB NO.	CIRCUIT NO.	PART NAME	DESCRIPTION		PART NO.	REMARKS
VD8258	A051	HOLDER	HOLDER(CLAMP)	1	27190540-1	
VD8258	C6001	C-CERA C	CK725F1A-105Z1	1	332181050R1	
VD8258	C6002	CHIP ELECT C	CEWX16V-22M	1	356742209R2	
VD8258-1J	C6003	C-CERA C	CK725F1A-105Z1	1	332181050R1	<WT3P>
VD8258-1P	C6003	C-CERA C	CK725F1A-105Z1	1	332181050R1	<GK3P> < GR6P>
VD8258-1H	C6003	C-CERA C	CK725F1A-105Z1	1	332181050R1	< PP2P>
VD8258-1J	C6004	C-CERA C	CK725F1A-105Z1	1	332181050R1	<WT3P>
VD8258-1P	C6004	C-CERA C	CK725F1A-105Z1	1	332181050R1	<GK3P> < GR6P>
VD8258-1H	C6004	C-CERA C	CK725F1A-105Z1	1	332181050R1	< PP2P>
VD8258-1J	C6005	C-CERA C	CK725F1A-105Z1	1	332181050R1	<WT3P>
VD8258-1P	C6005	C-CERA C	CK725F1A-105Z1	1	332181050R1	<GK3P> < GR6P>

VD8258-1H	C6005	C-CERA C	CK725F1A-105Z1	1	332181050R1	**< PP2P>**
VD8258-1J	C6006	C-CERA C	CK725F1A-105Z1	1	332181050R1	**<WT3P>**
VD8258-1P	C6006	C-CERA C	CK725F1A-105Z1	1	332181050R1	**<GK3P>** **< GR6P>**
VD8258-1H	C6006	C-CERA C	CK725F1A-105Z1	1	332181050R1	**< PP2P>**
VD8258	C6007	C-CERA C	CK725F1A-105Z1	1	332181050R1	
VD8258	C6008	C-CERA C	CK725F1A-105Z1	1	332181050R1	
VD8258	C6009	C-CERA C	CK725F1A-105Z1	1	332181050R1	
VD8258	C6010	C-CERA C	CK725F1A-105Z1	1	332181050R1	
VD8258	C6011	C-CERA C	CK725F1A-105Z1	1	332181050R1	
VD8258	C6012	C-CERA C	CK725F1A-105Z1	1	332181050R1	
VD8258	C6013	C-CERA C	CK725F1A-105Z1	1	332181050R1	
VD8258	C6014	C-CERA C	CK725F1A-105Z1	1	332181050R1	
VD8258	C6015	C-CERA C	CK725F1A-105Z1	1	332181050R1	
VD8258	C6020	C-CERA C	CK725F1A-105Z1	1	332181050R1	
VD8258	C6021	C-CERA C	CK725F1A-105Z1	1	332181050R1	
VD8258	C6022	C-CERA C	CK725F1A-105Z1	1	332181050R1	
VD8258	C6023	C-CERA C	CK725F1A-105Z1	1	332181050R1	
VD8258	C6024	C-CERA C	CK725F1A-105Z1	1	332181050R1	
VD8258	C6029	C-CERA C	CK725F1A-105Z1	1	332181050R1	
VD8258	C6030	C-CERA C	CK725F1A-105Z1	1	332181050R1	
VD8258	C6031	C-CERA C	CK725F1A-105Z1	1	332181050R1	
VD8258	C6032	C-CERA C	CK725F1A-105Z1	1	332181050R1	
VD8258	C6033	C-CERA C	CK725F1A-105Z1	1	332181050R1	
VD8258	C6034	C-CERA C	CK725F1A-105Z1	1	332181050R1	
VD8258	C6035	C-CERA C	CK725F1A-105Z1	1	332181050R1	
VD8258	C6036	C-CERA C	CK725F1A-105Z1	1	332181050R1	
VD8258	C6037	C-CERA C	CK725F1A-105Z1	1	332181050R1	
VD8258	C6038	C-CERA C	CK725F1A-105Z1	1	332181050R1	
VD8258	C6039	C-CERA C	CK725F1A-105Z1	1	332181050R1	
VD8258	C6040	C-CERA C	CC725CH1E-102J1	1	342111024R1	
VD8258	C6041	C-CERA C	CK725F1A-105Z1	1	332181050R1	
VD8258	C6042	CHIP ELECT C	CEWX16V-22M	1	356742209R2	
VD8258	C6043	C-CERA C	CK725F1A-105Z1	1	332181050R1	

VD8258	C6044	C-CERA C	CC725CH1H-101J1	1	342101014R1
VD8258	C6045	C-CERA C	CK725F1A-105Z1	1	332181050R1
VD8258	C6046	CHIP ELECT C	CEWX4V-220M	1	3567A2219R2
VD8258	C6047	C-CERA C	CK725F1A-105Z1	1	332181050R1
VD8258	C6048	CHIP ELECT C	CEWX4V-220M	1	3567A2219R2
VD8258	C6049	C-CERA C	CC725CH1E-102J1	1	342111024R1
VD8258	C6051	C-CERA C	CC725CH1H-050C1	1	342100501R1
VD8258	C6052	C-CERA C	CC725CH1H-050C1	1	342100501R1
VD8258	C6054	C-CERA C	CK725F1A-105Z1	1	332181050R1
VD8258	C6055	C-CERA C	CK725F1A-105Z1	1	332181050R1
VD8258	C6056	CHIP ELECT C	CEWX16V-100M	1	356741019R2
VD8258	C6062	C-CERA C	CK725F1A-105Z1	1	332181050R1
VD8258	C6063	CHIP ELECT C	CEWX4V-220M	1	3567A2219R2
VD8258	C6064	C-CERA C	CK725F1A-105Z1	1	332181050R1
VD8258	C6065	C-CERA C	CK725F1A-105Z1	1	332181050R1
VD8258	C6066	C-CERA C	CK725F1A-105Z1	1	332181050R1
VD8258	C6067	C-CERA C	CK725F1A-105Z1	1	332181050R1
VD8258	C6068	C-CERA C	CK725F1A-105Z1	1	332181050R1
VD8258	C6069	C-CERA C	CK725F1A-105Z1	1	332181050R1
VD8258	C6070	C-CERA C	CK725F1A-105Z1	1	332181050R1
VD8258	C6071	C-CERA C	CK725F1A-105Z1	1	332181050R1
VD8258	C6072	C-CERA C	CK725F1A-105Z1	1	332181050R1
VD8258	C6073	C-CERA C	CK725F1A-105Z1	1	332181050R1
VD8258	C6074	C-CERA C	CK725F1A-105Z1	1	332181050R1
VD8258	C6075	C-CERA C	CK725F1A-105Z1	1	332181050R1
VD8258	C6080	C-CERA C	CC725CH1H-050C1	1	342100501R1
VD8258	C6091	CHIP ELECT C	CEWX16V-10M	1	356741009R2
VD8258	C6092	CHIP ELECT C	CEWX6.3V-100M	1	356721019R2
VD8258	C6093	CHIP ELECT C	CEWX16V-10M	1	356741009R2
VD8258	C6101	C-CERA C	CK725F1A-105Z1	1	332181050R1
VD8258	C6102	CHIP ELECT C	CEWX4V-220M	1	3567A2219R2
VD8258	C6103	C-CERA C	CK725F1A-105Z1	1	332181050R1
VD8258	C6104	C-CERA C	CK725F1A-105Z1	1	332181050R1

VD8258	C6105	C-CERA C	CC725CH1E-102J1	1	342111024R1
VD8258	C6106	C-CERA C	CK725B1H-392K1	1	332103925R1
VD8258	C6107	C-CERA C	CC725CH1E-821J1	1	342118214R1
VD8258	C6108	C-CERA C	CK725B1C-104K1	1	332121045R1
VD8258	C6109	C-CERA C	CK725F1A-105Z1	1	332181050R1
VD8258	C6110	C-CERA C	CK725B1C-104K1	1	332121045R1
VD8258	C6111	C-CERA C	CK725F1A-105Z1	1	332181050R1
VD8258	C6112	C-CERA C	CK725F1A-105Z1	1	332181050R1
VD8258	C6113	C-CERA C	CK725F1A-105Z1	1	332181050R1
VD8258	C6114	CHIP ELECT C	CEWX4V-220M	1	3567A2219R2
VD8258	C6115	C-CERA C	CK725F1A-105Z1	1	332181050R1
VD8258	C6116	CHIP ELECT C	CEWX4V-220M	1	3567A2219R2
VD8258	C6117	C-CERA C	CK725F1A-105Z1	1	332181050R1
VD8258	C6118	CHIP ELECT C	CEWX16V-47M	1	356744709R2
VD8258	C6119	C-CERA C	CK725F1A-105Z1	1	332181050R1
VD8258	C6120	CHIP ELECT C	CEWX16V-10M	1	356741009R2
VD8258	C6121	C-CERA C	CK725F1A-105Z1	1	332181050R1
VD8258	C6122	CHIP ELECT C	CEWX16V-47M	1	356744709R2
VD8258	C6123	CHIP ELECT C	CEWX6.3V-100M	1	356721019R2
VD8258	C6124	C-CERA C	CK725F1A-105Z1	1	332181050R1
VD8258	C6125	CHIP ELECT C	CEWX50V-1M	1	356780109R2
VD8258	C6126	C-CERA C	CK725F1A-105Z1	1	332181050R1
VD8258	C6127	C-CERA C	CK725F1A-105Z1	1	332181050R1
VD8258	C6128	C-CERA C	CK725F1A-105Z1	1	332181050R1
VD8258	C6129	CHIP ELECT C	CEWX6.3V-100M	1	356721019R2
VD8258	C6151	C-CERA C	CK725F1A-105Z1	1	332181050R1
VD8258	C6152	CHIP ELECT C	CEWX50V-1M	1	356780109R2
VD8258	C6160	C-CERA C	CC725CH1H-030C1	1	342100301R1
VD8258	C6172	C-CERA C	CC725CH1H-030C1	1	342100301R1
VD8258	C6191	CHIP ELECT C	CEWX6.3V-100M	1	356721019R2
VD8258	C6192	CHIP ELECT C	CEWX6.3V-100M	1	356721019R2
VD8258	C6193	C-CERA C	CK725F1A-105Z1	1	332181050R1
VD8258	C6194	CHIP ELECT C	CEWX6.3V-100M	1	356721019R2

VD8258	C6195	C-CERA C	CK725F1A-105Z1	1	332181050R1
VD8258	C6196	CHIP ELECT C	CEWX6.3V-100M	1	356721019R2
VD8258	C6197	C-CERA C	CK725F1A-105Z1	1	332181050R1
VD8258	C6198	CHIP ELECT C	CEWX6.3V-100M	1	356721019R2
VD8258	C6199	C-CERA C	CK725F1A-105Z1	1	332181050R1
VD8258	C6201	C-CERA C	CK725F1A-105Z1	1	332181050R1
VD8258	C6202	CHIP ELECT C	CEWX50V-1M	1	356780109R2
VD8258	C6251	C-CERA C	CK725F1A-105Z1	1	332181050R1
VD8258	C6252	CHIP ELECT C	CEWX50V-1M	1	356780109R2
VD8258	C6253	C-CERA C	CK725B1C-104K1	1	332121045R1
VD8258	C6254	C-CERA C	CK725B1H-103K1	1	332101035R1
VD8258	C6255	C-CERA C	CK725B1C-104K1	1	332121045R1
VD8258	C6256	C-CERA C	CK725B1H-103K1	1	332101035R1
VD8258	C6297	C-CERA C	CK725F1A-105Z1	1	332181050R1
VD8258	C6299	C-CERA C	CK725F1A-105Z1	1	332181050R1
VD8258	C6301	C-CERA C	CK725F1A-105Z1	1	332181050R1
VD8258	C6302	CHIP ELECT C	CEWX50V-1M	1	356780109R2
VD8258	C6351	C-CERA C	CK725F1A-105Z1	1	332181050R1
VD8258	C6352	CHIP ELECT C	CEWX50V-1M	1	356780109R2
VD8258	C6392	CHIP ELECT C	CEWX6.3V-100M	1	356721019R2
VD8258	C6393	C-CERA C	CK725F1A-105Z1	1	332181050R1
VD8258	C6394	CHIP ELECT C	CEWX6.3V-100M	1	356721019R2
VD8258	C6395	C-CERA C	CK725F1A-105Z1	1	332181050R1
VD8258	C6396	CHIP ELECT C	CEWX6.3V-100M	1	356721019R2
VD8258	C6397	C-CERA C	CK725F1A-105Z1	1	332181050R1
VD8258	C6398	CHIP ELECT C	CEWX6.3V-100M	1	356721019R2
VD8258	C6399	C-CERA C	CK725F1A-105Z1	1	332181050R1
VD8258	C6401	C-CERA C	CK725F1A-105Z1	1	332181050R1
VD8258	C6402	CHIP ELECT C	CEWX50V-1M	1	356780109R2
VD8258	C6451	CHIP ELECT C	CEWX16V-47M	1	356744709R2
VD8258	C6452	CHIP ELECT C	CEWX16V-47M	1	356744709R2
VD8258	C6453	CHIP ELECT C	CEWX16V-47M	1	356744709R2
VD8258	C6454	CHIP ELECT C	CEWX16V-47M	1	356744709R2

VD8258	C6455	CHIP ELECT C	CEWX6.3V-100M	1	356721019R2
VD8258	C6456	CHIP ELECT C	CEWX6.3V-100M	1	356721019R2
VD8258	C6501	CHIP ELECT C	CEWX4V-220M	1	3567A2219R2
VD8258	C6502	C-CERA C	CK725F1A-105Z1	1	332181050R1
VD8258	C6503	CHIP ELECT C	CEWX4V-220M	1	3567A2219R2
VD8258	C6504	C-CERA C	CK725F1A-105Z1	1	332181050R1
VD8258	C6505	C-CERA C	CK725F1A-105Z1	1	332181050R1
VD8258	C6506	C-CERA C	CC725CH1E-102J1	1	342111024R1
VD8258	C6507	C-CERA C	CK725B1H-392K1	1	332103925R1
VD8258	C6508	C-CERA C	CC725CH1E-821J1	1	342118214R1
VD8258	C6509	C-CERA C	CK725B1C-104K1	1	332121045R1
VD8258	C6510	C-CERA C	CK725F1A-105Z1	1	332181050R1
VD8258	C6511	C-CERA C	CK725B1C-104K1	1	332121045R1
VD8258	C6512	C-CERA C	CK725F1A-105Z1	1	332181050R1
VD8258	C6513	C-CERA C	CK725F1A-105Z1	1	332181050R1
VD8258	C6514	CHIP ELECT C	CEWX4V-220M	1	3567A2219R2
VD8258	C6515	C-CERA C	CK725F1A-105Z1	1	332181050R1
VD8258	C6516	C-CERA C	CK725F1A-105Z1	1	332181050R1
VD8258	C6517	C-CERA C	CK725F1A-105Z1	1	332181050R1
VD8258	C6518	CHIP ELECT C	CEWX16V-47M	1	356744709R2
VD8258	C6522	CHIP ELECT C	CEWX50V-1M	1	356780109R2
VD8258	C6523	C-CERA C	CK725F1A-105Z1	1	332181050R1
VD8258	C6524	C-CERA C	CK725F1A-105Z1	1	332181050R1
VD8258	C6525	C-CERA C	CK725F1A-105Z1	1	332181050R1
VD8258	C6526	CHIP ELECT C	CEWX16V-47M	1	356744709R2
VD8258	C6527	CHIP ELECT C	CEWX6.3V-100M	1	356721019R2
VD8258	C6528	CHIP ELECT C	CEWX6.3V-100M	1	356721019R2
VD8258	C6529	C-CERA C	CK725F1A-105Z1	1	332181050R1
VD8258	C6531	C-CERA C	CC725CH1H-100D1	1	342101002R1
VD8258	C6532	C-CERA C	CC725CH1H-100D1	1	342101002R1
VD8258	C6551	C-CERA C	CK725F1A-105Z1	1	332181050R1
VD8258	C6552	CHIP ELECT C	CEWX50V-1M	1	356780109R2
VD8258	C6553	CHIP ELECT C	CEWX6.3V-100M	1	356721019R2

VD8258	C6554	C-CERA C	CK725F1A-105Z1	1	332181050R1		
VD8258	C6555	C-CERA C	CK725F1A-105Z1	1	332181050R1		
VD8258	C6556	CHIP ELECT C	CEWX6.3V-100M	1	356721019R2		
VD8258	C6557	CHIP ELECT C	CEWX6.3V-100M	1	356721019R2		
VD8258	C6601	C-CERA C	CK725F1A-105Z1	1	332181050R1		
VD8258	C6602	CHIP ELECT C	CEWX50V-1M	1	356780109R2		
VD8258	C6651	C-CERA C	CK725F1A-105Z1	1	332181050R1		
VD8258	C6652	CHIP ELECT C	CEWX50V-1M	1	356780109R2		
VD8258-1G	C6719	CHIP ELECT C	CEWX6.3V-100M	1	356721019R2	**<DC1N>**	
VD8258-1G	C6720	C-CERA C	CK725F1E-104Z1	1	332161040R1	**<DC1N>**	
VD8258-1G	C6721	CHIP ELECT C	CEWX6.3V-100M	1	356721019R2	**<DC1N>**	
VD8258-1G	C6722	C-CERA C	CK725F1E-104Z1	1	332161040R1	**<DC1N>**	
VD8258-1J	C6723	CHIP ELECT C	CEWX6.3V-100M	1	356721019R2	**<WT3P>**	
VD8258-1P	C6723	CHIP ELECT C	CEWX6.3V-100M	1	356721019R2	**<GK3P>**	**< GR6P>**
VD8258-1H	C6723	CHIP ELECT C	CEWX6.3V-100M	1	356721019R2	**< PP2P>**	
VD8258-1J	C6724	C-CERA C	CK725F1E-104Z1	1	332161040R1	**<WT3P>**	
VD8258-1P	C6724	C-CERA C	CK725F1E-104Z1	1	332161040R1	**<GK3P>**	**< GR6P>**
VD8258-1H	C6724	C-CERA C	CK725F1E-104Z1	1	332161040R1	**< PP2P>**	
VD8258-1J	C6725	CHIP ELECT C	CEWX6.3V-100M	1	356721019R2	**<WT3P>**	
VD8258-1P	C6725	CHIP ELECT C	CEWX6.3V-100M	1	356721019R2	**<GK3P>**	**< GR6P>**
VD8258-1H	C6725	CHIP ELECT C	CEWX6.3V-100M	1	356721019R2	**< PP2P>**	
VD8258-1J	C6726	C-CERA C	CK725F1E-104Z1	1	332161040R1	**<WT3P>**	
VD8258-1P	C6726	C-CERA C	CK725F1E-104Z1	1	332161040R1	**<GK3P>**	**< GR6P>**
VD8258-1H	C6726	C-CERA C	CK725F1E-104Z1	1	332161040R1	**< PP2P>**	
VD8258	C7001	C-CERA C	CK725F1E-104Z1	1	332161040R1		
VD8258	C7002	C-CERA C	CK725F1E-104Z1	1	332161040R1		
VD8258	C7003	C-CERA C	CC725CH1H-220J1	1	342102204R1		
VD8258	C7004	C-CERA C	CK725F1E-104Z1	1	332161040R1		
VD8258	C7005	CHIP ELECT C	CEWX6.3V-100M	1	356721019R2		
VD8258	C7006	C-CERA C	CK725F1E-104Z1	1	332161040R1		
VD8258	C7007	CHIP ELECT C	CEWX6.3V-100M	1	356721019R2		
VD8258	C7008	C-CERA C	CK725F1E-104Z1	1	332161040R1		
VD8258	C7009	C-CERA C	CK725F1E-104Z1	1	332161040R1		

VD8258	C7010	C-CERA C	CK725F1E-104Z1	1	332161040R1
VD8258	C7101	CHIP ELECT C	CEWX6.3V-100M	1	356721019R2
VD8258	C7102	C-CERA C	CK725F1E-104Z1	1	332161040R1
VD8258	C7103	CHIP ELECT C	CEWX6.3V-100M	1	356721019R2
VD8258	C7104	C-CERA C	CK725F1E-104Z1	1	332161040R1
VD8258	C7105	CHIP ELECT C	CEWX6.3V-100M	1	356721019R2
VD8258	C7106	C-CERA C	CK725F1E-104Z1	1	332161040R1
VD8258	C7107	CHIP ELECT C	CEWX6.3V-100M	1	356721019R2
VD8258	C7108	C-CERA C	CK725F1E-104Z1	1	332161040R1
VD8258	C7109	C-CERA C	CK725F1E-104Z1	1	332161040R1
VD8258	C7110	CHIP ELECT C	CEWX6.3V-47M	1	356724709R2
VD8258	C7111	C-CERA C	CK725F1E-104Z1	1	332161040R1
VD8258	C7112	CHIP ELECT C	CEWX6.3V-47M	1	356724709R2
VD8258	C7113	C-CERA C	CK725F1E-104Z1	1	332161040R1
VD8258	C7201	CHIP ELECT C	CEWX6.3V-100M	1	356721019R2
VD8258	C7202	C-CERA C	CK725F1E-104Z1	1	332161040R1
VD8258	C7203	C-CERA C	CK725F1E-104Z1	1	332161040R1
VD8258	C7204	C-CERA C	CK725F1E-104Z1	1	332161040R1
VD8258	C7301	C-CERA C	CK725F1E-104Z1	1	332161040R1
VD8258	C7302	C-CERA C	CK725F1E-104Z1	1	332161040R1
VD8258	C7303	C-CERA C	CK725B1H-103K1	1	332101035R1
VD8258	C7304	C-CERA C	CK725B1H-103K1	1	332101035R1
VD8258	C7305	CHIP ELECT C	CEWX6.3V-100M	1	356721019R2
VD8258	C7306	C-CERA C	CK725F1E-104Z1	1	332161040R1
VD8258	C7310	C-CERA C	CK725F1E-104Z1	1	332161040R1
VD8258	C7311	C-CERA C	CK725F1E-104Z1	1	332161040R1
VD8258	C7312	C-CERA C	CK725F1E-104Z1	1	332161040R1
VD8258	C7401	CHIP ELECT C	CEWX16V-100M	1	356741019R2
VD8258	C7402	C-CERA C	CK725F1E-104Z1	1	332161040R1
VD8258	C7403	CHIP ELECT C	CEWX16V-10M	1	356741009R2
VD8258	C7404	C-CERA C	CK725F1E-104Z1	1	332161040R1
VD8258	C7405	C-CERA C	CK725F1E-104Z1	1	332161040R1
VD8258	D6001	LED	SEC1401C	1	225383R2

VD8258	D6002	LED	SEC1401C	1	225383R2
VD8258	D6003	LED	SEC1401C	1	225383R2
VD8258	D6004	LED	SEC1401C	1	225383R2
VD8258	D6005	LED	SEC1401C	1	225383R2
VD8258	D6006	LED	SEC1401C	1	225383R2
VD8258	D6151	C-DIODE	1SS352	1	223234R2
VD8258	D6201	C-DIODE	1SS352	1	223234R2
VD8258	D6251	C-DIODE	1SS352	1	223234R2
VD8258	D6301	C-DIODE	1SS352	1	223234R2
VD8258	D6351	C-DIODE	1SS352	1	223234R2
VD8258	D6401	C-DIODE	1SS352	1	223234R2
VD8258	D6451	ZENER D	UDZS5.6B	1	224550560R2
VD8258	D6452	ZENER D	UDZS5.6B	1	224550560R2
VD8258	D6551	C-DIODE	1SS352	1	223234R2
VD8258	D6601	C-DIODE	1SS352	1	223234R2
VD8258	D6651	C-DIODE	1SS352	1	223234R2
VD8258	D7201	ZENER D	UDZS5.6B	1	224550560R2
VD8258	D7202	C-DIODE	1SS352	1	223234R2
VD8258	D7301	C-DIODE	1SS352	1	223234R2
VD8258	D7302	C-DIODE	1SS352	1	223234R2
VD8258	D7303	C-DIODE	1SS352	1	223234R2
VD8258	D7304	C-DIODE	1SS352	1	223234R2
VD8258	D7305	C-DIODE	1SS352	1	223234R2
VD8258	D7310	LED	SEC1201C	1	225385R2
VD8258	D7401	C-DIODE	1SR154-400	1	22380284R2
VD8258	D7402	ZENER D	UDZS3.6B	1	224550360R2
VD8258	E7111	RETAINER	E PLATE	1	2714059
VD8258	E7112	RETAINER	E PLATE	1	2714059
VD8258	F6451	FUSE	ICP-S1.0	1	252223R2
VD8258	F6452	FUSE	ICP-S1.0	1	252223R2
VD8258	L6001	CHOKE COIL	NCH-1471	1	231237K022R2
VD8258	L6002	CHOKE COIL	NCH-1471	1	231237K022R2
VD8258	L6003	CHOKE COIL	NCH-1471	1	231237K022R2

VD8258	L6004	CHOKE COIL	NCH-1471	1	231237K022R2			
VD8258	L6006	CHOKE COIL	NCH-1471	1	231237K022R2			
VD8258	L6201	CHOKE COIL	NCH-1471	1	231237K022R2			
VD8258	L6202	CHOKE COIL	NCH-1471	1	231237K022R2			
VD8258	L6203	CHOKE COIL	NCH-1471	1	231237K022R2			
VD8258	L6501	CHOKE COIL	NCH-1471	1	231237K022R2			
VD8258	L6502	CHOKE COIL	NCH-1471	1	231237K022R2			
VD8258	L6503	CHOKE COIL	NCH-1471	1	231237K022R2			
VD8258	L6551	LC BLOCK	CY4W(15MHz)	1	3030049R2	N		
VD8258	L6601	LC BLOCK	CY4W(15MHz)	1	3030049R2	N		
VD8258	L6651	LC BLOCK	CY4W(15MHz)	1	3030049R2	N		
VD8258-1G	L6701	CORE	N1608Z601T01	1	230981R2	N	**<DC1N>**	
VD8258-1G	L6702	CORE	N1608Z601T01	1	230981R2	N	**<DC1N>**	
VD8258-1G	L6703	CORE	N1608Z601T01	1	230981R2	N	**<DC1N>**	
VD8258-1J	L6801	CORE	N1608Z601T01	1	230981R2		**<WT3P>**	
VD8258-1P	L6801	CORE	N1608Z601T01	1	230981R2		**<GK3P>**	**< GR6P>**
VD8258-1H	L6801	CORE	N1608Z601T01	1	230981R2		**< PP2P>**	
VD8258-1J	L6802	CORE	N1608Z601T01	1	230981R2		**<WT3P>**	
VD8258-1P	L6802	CORE	N1608Z601T01	1	230981R2		**<GK3P>**	**< GR6P>**
VD8258-1H	L6802	CORE	N1608Z601T01	1	230981R2		**< PP2P>**	
VD8258-1J	L6803	CORE	N1608Z601T01	1	230981R2		**<WT3P>**	
VD8258-1P	L6803	CORE	N1608Z601T01	1	230981R2		**<GK3P>**	**< GR6P>**
VD8258-1H	L6803	CORE	N1608Z601T01	1	230981R2		**< PP2P>**	
VD8258	P2001B	PLUG	SM14B-SURS-TF	1	25056397R2	N		
VD8258	P2002B	PLUG	SM15B-SURS-TF	1	25056398R2	N		
VD8258	P2701B	PLUG	NPLG-7P920	1	25055967R2			
VD8258	P2901B	PLUG	NPLG-6P919	1	25055966R2			
VD8258	P3503B	SOCKET(B to B)	IMSA-9850S-22Y900	1	25052814R2	N		
VD8258	P4008B	PLUG	NPLG-5P918	1	25055965R2			
VD8258	P4571A	PLUG	NPLG-8P1105	1	25056166R2	N		
VD8258	P5001B	SOCKET(B to B)	IMSA-9850S-22Y900	1	25052814R2	N		
VD8258	P5401B	SOCKET	CPB8148-0211	1	25053023R2	N		
VD8258	P6001A	PLUG(B to B)	IMSA-9850B-16Y900	1	25056203R2	N		

VD8258	P6001B	SOCKET(B to B)	IMSA-9850S-16Y900	1	25052811R2	N		
VD8258	P6003A	PLUG(B to B)	IMSA-9850B-28Y900	1	25056209R2	N		
VD8258	P6003B	SOCKET(B to B)	IMSA-9850S-28Y900	1	25052817R2	N		
VD8258	P6005A	PLUG	NPLG-8P1105	1	25056166R2	N		
VD8258-1G	P6005C	PLUG	NPLG-8P1105	1	25056166R2	N	**<DC1N>**	
VD8258	P6151	PIN JACK	NPJ-10PDBY459	1	25045660			
VD8258	P6301	PIN JACK	NPJ-3PDGLR429	1	25045622			
VD8258-1H	P6302A	PLUG	NPLG-7P1104	1	25056165R2		**< PP2P>**	
VD8258-1H	P6303A	PLUG	NPLG-6P1103	1	25056164R2		**< PP2P>**	
VD8258	P6452A	PLUG(B to B)	IMSA-9852B-08Y900	1	25056366R2	N		
VD8258	P6452B	SOCKET(B to B)	IMSA-9850S-08Y900	1	25052807R2			
VD8258	P6551A	PLUG	NPLG-9P1106	1	25056167R2	N		
VD8258-1G	P6551C	PLUG	NPLG-9P1106	1	25056167R2	N	**<DC1N>**	
VD8258-1J	P6703B	PLUG	NPLG-10P1107	1	25056168R2		**<WT3P>**	
VD8258-1P	P6703B	PLUG	NPLG-10P1107	1	25056168R2		**<GK3P>**	**< GR6P>**
VD8258-1H	P6703B	PLUG	NPLG-10P1107	1	25056168R2		**< PP2P>**	
VD8258-1G	P6704	PIN JACK	NPJ-1PDG541	1	25045756	N	**<DC1N>**	
VD8258-1G	P6705	PIN JACK	NPJ-1PDL540	1	25045755	N	**<DC1N>**	
VD8258-1G	P6706	PIN JACK	NPJ-1PDR539	1	25045754	N	**<DC1N>**	
VD8258-1J	P6707	BNC JACK	P2298-C	1	25045760		**<WT3P>**	
VD8258-1P	P6707	BNC JACK	P2298-C	1	25045760		**<GK3P>**	**< GR6P>**
VD8258-1H	P6707	BNC JACK	P2298-C	1	25045760		**< PP2P>**	
VD8258-1J	P7010A	PLUG	NPLG-4P1101	1	25056162R2		**<WT3P>**	
VD8258-1P	P7010A	PLUG	NPLG-4P1101	1	25056162R2		**<GK3P>**	**< GR6P>**
VD8258-1H	P7010A	PLUG	NPLG-4P1101	1	25056162R2		**< PP2P>**	
VD8258	P7201A	SOCKET	NSCT-26P2696	1	25052800R2	N		
VD8258	P7302	PLUG	NPLG-8P660	1	25055704			
VD8258	P7401A	PLUG	NPLG-7P920	1	25055967R2			
VD8258	P8001B	SOCKET(B to B)	IMSA-9850S-28Y900	1	25052817R2	N		
VD8258	P8002B	SOCKET(B to B)	IMSA-9850S-20Y900	1	25052813R2	N		
VD8258	P8603B	SOCKET	CPB8148-0211	1	25053023R2	N		
VD8258	P8701B	SOCKET(B to B)	IMSA-9850S-10Y900	1	25052808R2	N		
VD8258	P9103B	PLUG	NPLG-4P917	1	25055964R2			

VD8258	P9601B	PLUG	NPLG-12P925	1	25055972R2			
VD8258	P9602B	PLUG	NPLG-14P927	1	25055974R2	N		
VD8258-1J	Q6001	IC	TC74VCX162244FT	1	2227C244DR2TO		<**WT3P**>	
VD8258-1P	Q6001	IC	TC74VCX162244FT	1	2227C244DR2TO		<**GK3P**>	**< GR6P**>
VD8258-1H	Q6001	IC	TC74VCX162244FT	1	2227C244DR2TO		**< PP2P**>	
VD8258	Q6002	IC	TC74VCX162244FT	1	2227C244DR2TO	N		
VD8258	Q6003	IC	Sil504	1	22242049R3			
VD8258	Q6004	IC	IC42S32200L-7TG	1	22242056R2	N		
VD8258	Q6004 or	IC	IS42S32200B-7T	(1)	22242031R3			
VD8258	Q6005	IC	MC504	1	22242050R9	N		
VD8258	Q6008	TR	NDC7002N	1	2216870R2	N		
VD8258	Q6009	TR	DTC114EE	1	2216730R2			
VD8258	Q6010	TR	2SK3019	1	2216520R2			
VD8258	Q6011	TR	NDC7002N	1	2216870R2	N		
VD8258	Q6091	IC	LM1117MPX-ADJ	1	22241648R2			
VD8258-1G	Q6101	IC	ADV7310	1	22242058R3	N		
VD8258	Q6102	IC	NJM2880U25	1	22242085R2	N		
VD8258	Q6103	IC	74AHCT1G08GW	1	22242072R2PH	N		
VD8258	Q6103 or	IC	TC7SET08FU	(1)	22242072R2TO	N		
VD8258	Q6104	TR	DTC144EE	1	2216390R2			
VD8258	Q6105	TR	DTC144EE	1	2216390R2			
VD8258	Q6106	TR	DTA144EE	1	2216380R2			
VD8258	Q6107	TR	DTA144EE	1	2216380R2			
VD8258	Q6108	IC	74AHCT1G04GW	1	22242079R2PH	N		
VD8258	Q6108 or	IC	TC7SET04FU	(1)	22242079R2TO	N		
VD8258	Q6109	IC	74AHCT1G08GW	1	22242072R2PH	N		
VD8258	Q6109 or	IC	TC7SET08FU	(1)	22242072R2TO	N		
VD8258	Q6110	IC	TK15420M	1	22241443R2			
VD8258	Q6111	IC	TK15420M	1	22241443R2			
VD8258	Q6112	IC	NJM2373AF	1	22241897R2			
VD8258	Q6113	IC	EL4581CS	1	22241527R2			
VD8258	Q6114	IC	74AHCT1G02GW	1	22242089R2PH	N		
VD8258	Q6114 or	IC	TC7SET02FU	(1)	22242089R2TO	N		

VD8258	Q6115	IC	TC7SZ125FU	1	22241895R2
VD8258	Q6151	TR	2SA1162-GR	1	2214375R2
VD8258	Q6152	TR	2SC2712-GR	1	2213145R2
VD8258	Q6153	IC	LA7106MFP	1	22241465R2
VD8258	Q6154	IC	MAX4018ESD	1	22241440R2
VD8258	Q6155	IC	MAX4018ESD	1	22241440R2
VD8258	Q6201	TR	2SA1162-GR	1	2214375R2
VD8258	Q6202	TR	2SC2712-GR	1	2213145R2
VD8258	Q6251	TR	2SA1162-GR	1	2214375R2
VD8258	Q6252	TR	2SC2712-GR	1	2213145R2
VD8258	Q6253	TR	DTA144EE	1	2216380R2
VD8258	Q6254	TR	DTA144EE	1	2216380R2
VD8258	Q6301	TR	2SA1162-GR	1	2214375R2
VD8258	Q6302	TR	2SC2712-GR	1	2213145R2
VD8258	Q6303	IC	LA7106MFP	1	22241465R2
VD8258	Q6304	IC	MAX4018ESD	1	22241440R2
VD8258	Q6351	TR	2SA1162-GR	1	2214375R2
VD8258	Q6352	TR	2SC2712-GR	1	2213145R2
VD8258	Q6401	TR	2SA1162-GR	1	2214375R2
VD8258	Q6402	TR	2SC2712-GR	1	2213145R2
VD8258	Q6451	TR	2SB1565-E	1	2202715
VD8258	Q6451 or	TR	2SB1565-F	(1)	2202716
VD8258	Q6451A	HEAT SINK	SP211K	1	27160442
VD8258	Q6451B	SCREW	3P+10FN(BC)	1	82143010
VD8258	Q6451C	NUT	N-3FN(BC)	1	863430
VD8258	Q6451Cor	NUT	N-3FN	(1)	863130
VD8258	Q6452	TR	2SD2394-E	1	2202705
VD8258	Q6452 or	TR	2SD2394-F	(1)	2202706
VD8258	Q6452A	HEAT SINK	SP211K	1	27160442
VD8258	Q6452B	SCREW	3P+10FN(BC)	1	82143010
VD8258	Q6452C	NUT	N-3FN(BC)	1	863430
VD8258	Q6452Cor	NUT	N-3FN	(1)	863130
VD8258	Q6453	TR	2SC2712-GR	1	2213145R2

VD8258	Q6454	TR	2SA1162-GR	1	2214375R2		
VD8258	Q6455	TR	DTC144EE	1	2216390R2		
VD8258	Q6456	TR	DTA144EE	1	2216380R2		
VD8258	Q6501	IC	ADV7314	1	22242057R2	N	
VD8258	Q6502	IC	NJM2880U25	1	22242085R2	N	
VD8258	Q6521	IC	EL4581CS	1	22241527R2		
VD8258	Q6522	IC	74AHCT1G02GW	1	22242089R2PH	N	
VD8258	Q6522 or	IC	TC7SET02FU	(1)	22242089R2TO	N	
VD8258	Q6523	IC	NJM2373AF	1	22241897R2		
VD8258	Q6524	IC	TK15420M	1	22241443R2		
VD8258	Q6525	IC	TK15420M	1	22241443R2		
VD8258	Q6551	TR	2SA1162-GR	1	2214375R2		
VD8258	Q6552	TR	2SA1162-GR	1	2214375R2		
VD8258	Q6553	TR	2SC2712-GR	1	2213145R2		
VD8258	Q6554	IC	MAX4018ESD	1	22241440R2		
VD8258	Q6601	TR	2SA1162-GR	1	2214375R2		
VD8258	Q6602	TR	2SA1162-GR	1	2214375R2		
VD8258	Q6603	TR	2SC2712-GR	1	2213145R2		
VD8258	Q6651	TR	2SA1162-GR	1	2214375R2		
VD8258	Q6652	TR	2SA1162-GR	1	2214375R2		
VD8258	Q6653	TR	2SC2712-GR	1	2213145R2		
VD8258-1G	Q6707	IC	MAX4218ESD	1	22241442R2		**<DC1N>**
VD8258	Q7001	IC	M30624LFGPFP U5 (0087)	1	NSP	N	
VD8258	Q7101	IC(REGULATOR)	SI-3033LUS	1	22278033CR2		
VD8258	Q7102	IC	NJM2370U05	1	22241289R2		
VD8258	Q7201	IC	74AHCT125PW	1	22241894R2PH	N	
VD8258	Q7202	IC	74LV125PW	1	22274125CR2PH	N	
VD8258	Q7203	TR	RN2403	1	2214540R2		
VD8258	Q7301	IC	S-80127CNMC-JKM-T2	1	22241642R2		
VD8258	Q7302	IC	TC7WU04FU	1	22240935R2		
VD8258	Q7303	IC	TC7W74FU	1	22241408R2		
VD8258	Q7304	IC	TC7SH08FU	1	22241830R2TO		
VD8258	Q7305	IC	74LVC1G04GW	1	22242074R2PH	N	

VD8258	Q7305 or	IC	TC7SZ04FU	(1)	22242074R2TO	N
VD8258	Q7401	IC	BA6288FS	1	22241656R2	
VD8258	R6001	C-CARBON R	RN72K1J-220FE	1	435032202R1	
VD8258	R6002	C-CARBON R	RN72K1J-220FE	1	435032202R1	
VD8258	R6003	C-CARBON R	RN72K1J-220FE	1	435032202R1	
VD8258	R6004	C-R NET	RM7LJ100X04	1	43484710004R2	N
VD8258	R6005	C-R NET	RM7LJ100X04	1	43484710004R2	N
VD8258	R6006	C-R NET	RM7LJ100X04	1	43484710004R2	N
VD8258	R6007	C-R NET	RM7LJ100X04	1	43484710004R2	N
VD8258	R6008	C-R NET	RM7LJ100X04	1	43484710004R2	N
VD8258	R6009	C-R NET	RM7LJ100X04	1	43484710004R2	N
VD8258	R6010	C-R NET	RM7LJ100X04	1	43484710004R2	N
VD8258	R6011	C-R NET	RM7LJ100X04	1	43484710004R2	N
VD8258	R6012	C-R NET	RM7LJ100X04	1	43484710004R2	N
VD8258	R6019	C-CARBON R	RN72K1J-472FE	1	435034722R1	
VD8258	R6020	C-CARBON R	RN72K1J-472FE	1	435034722R1	
VD8258	R6023	C-CARBON R	RN72K1J-000JE	1	435030004R1	
VD8258	R6024	C-CARBON R	RN72K1J-000JE	1	435030004R1	
VD8258	R6025	C-CARBON R	RN72K1J-000JE	1	435030004R1	
VD8258	R6026	C-CARBON R	RN72K1J-000JE	1	435030004R1	
VD8258	R6027	C-CARBON R	RN72K1J-000JE	1	435030004R1	
VD8258	R6028	C-CARBON R	RN72K1J-000JE	1	435030004R1	
VD8258	R6031	C-CARBON R	RN72K1J-103FE	1	435031032R1	
VD8258	R6032	C-CARBON R	RN72K1J-103FE	1	435031032R1	
VD8258	R6033	C-R NET	RM7LJ103X04	1	43484710304R2	N
VD8258	R6034	C-R NET	RM7LJ103X04	1	43484710304R2	N
VD8258	R6035	C-CARBON R	RN72K1J-104FE	1	435031042R1	
VD8258	R6036	C-CARBON R	RN72K1J-222FE	1	435032222R1	
VD8258	R6037	C-CARBON R	RN72K1J-222FE	1	435032222R1	
VD8258	R6038	C-CARBON R	RN72K1J-222FE	1	435032222R1	
VD8258	R6039	C-CARBON R	RN72K1J-000JE	1	435030004R1	
VD8258	R6040	C-CARBON R	RN72K1J-102FE	1	435031022R1	
VD8258	R6043	C-CARBON R	RN72K1J-101FE	1	435031012R1	

VD8258	R6044	C-CARBON R	RN72K1J-472FE	1	435034722R1			
VD8258	R6046	C-CARBON R	RN72K1J-472FE	1	435034722R1			
VD8258	R6047	C-CARBON R	RN72K1J-472FE	1	435034722R1			
VD8258	R6049	C-CARBON R	RN72K1J-472FE	1	435034722R1			
VD8258	R6052	C-CARBON R	RN72K1J-102FE	1	435031022R1			
VD8258	R6053	C-CARBON R	RN72K1J-105FE	1	435031052R1			
VD8258	R6054	C-CARBON R	RN72K1J-000JE	1	435030004R1			
VD8258	R6055	C-CARBON R	RN72K1J-472FE	1	435034722R1			
VD8258	R6056	C-CARBON R	RN72K1J-472FE	1	435034722R1			
VD8258	R6057	C-CARBON R	RN72K1J-222FE	1	435032222R1			
VD8258	R6058	C-CARBON R	RN72K1J-222FE	1	435032222R1			
VD8258	R6059	C-CARBON R	RN72K1J-222FE	1	435032222R1			
VD8258	R6060	C-CARBON R	RN72K1J-000JE	1	435030004R1			
VD8258	R6061	C-CARBON R	RN72K1J-103FE	1	435031032R1			
VD8258	R6062	C-CARBON R	RN72K1J-102FE	1	435031022R1			
VD8258	R6063	C-CARBON R	RN72K1J-103FE	1	435031032R1			
VD8258	R6064	C-CARBON R	RN72K1J-102FE	1	435031022R1			
VD8258	R6065	C-CARBON R	RN72K1J-222FE	1	435032222R1			
VD8258	R6066	C-CARBON R	RN72K1J-222FE	1	435032222R1			
VD8258	R6069	C-CARBON R	RN72K1J-472FE	1	435034722R1			
VD8258	R6074	C-CARBON R	RN72K1J-000JE	1	435030004R1			
VD8258	R6075	C-CARBON R	RN72K1J-000JE	1	435030004R1			
VD8258	R6076	C-CARBON R	RN72K1J-222FE	1	435032222R1			
VD8258	R6077	C-CARBON R	RN72K1J-222FE	1	435032222R1			
VD8258	R6078	C-CARBON R	RN72K1J-471FE	1	435034712R1			
VD8258	R6079	C-CARBON R	RN72K1J-000JE	1	435030004R1			
VD8258	R6080	C-CARBON R	RN72K1J-000JE	1	435030004R1			
VD8258	R6081	C-CARBON R	RN72K1J-000JE	1	435030004R1			
VD8258	R6082	C-CARBON R	RN72K1J-100FE	1	435031002R1	N		
VD8258	R6083	C-CARBON R	RN72K1J-000JE	1	435030004R1			
VD8258-1J	R6086	C-CARBON R	RN72K1J-000JE	1	435030004R1		**<WT3P>**	
VD8258-1P	R6086	C-CARBON R	RN72K1J-000JE	1	435030004R1		**<GK3P>**	**< GR6P>**
VD8258-1H	R6086	C-CARBON R	RN72K1J-000JE	1	435030004R1		**< PP2P>**	

VD8258-1J	R6087	C-CARBON R	RN72K1J-000JE	1	435030004R1	**<WT3P>**	
VD8258-1P	R6087	C-CARBON R	RN72K1J-000JE	1	435030004R1	**<GK3P>**	**< GR6P>**
VD8258-1H	R6087	C-CARBON R	RN72K1J-000JE	1	435030004R1	**< PP2P>**	
VD8258-1J	R6088	C-CARBON R	RN72K1J-000JE	1	435030004R1	**<WT3P>**	
VD8258-1P	R6088	C-CARBON R	RN72K1J-000JE	1	435030004R1	**<GK3P>**	**< GR6P>**
VD8258-1H	R6088	C-CARBON R	RN72K1J-000JE	1	435030004R1	**< PP2P>**	
VD8258	R6089	C-CARBON R	RN72K1J-000JE	1	435030004R1		
VD8258	R6090	C-CARBON R	RN72K1J-000JE	1	435030004R1		
VD8258	R6091	C-CARBON R	RN72K1J-121FE	1	435031212R1		
VD8258	R6094	C-CARBON R	RN72K1J-241FE	1	435032412R1		
VD8258	R6095	C-CARBON R	RN72K1J-000JE	1	435030004R1		
VD8258	R6097	C-CARBON R	RN72K1J-000JE	1	435030004R1		
VD8258	R6098	C-CARBON R	RN72K1J-000JE	1	435030004R1		
VD8258	R6099	C-CARBON R	RN72K1J-472FE	1	435034722R1		
VD8258	R6101	C-CARBON R	RN72K1J-103FE	1	435031032R1		
VD8258	R6103	C-CARBON R	RN72K1J-472FE	1	435034722R1		
VD8258	R6104	C-CARBON R	RN72K1J-472FE	1	435034722R1		
VD8258	R6105	C-CARBON R	RN72K1J-103FE	1	435031032R1		
VD8258	R6106	C-CARBON R	RN72K1J-000JE	1	435030004R1		
VD8258	R6107	C-CARBON R	RN72K1J-102FE	1	435031022R1		
VD8258	R6108	C-CARBON R	RN72K1J-681FE	1	435036812R1		
VD8258	R6109	C-CARBON R	RN72K1J-681FE	1	435036812R1		
VD8258	R6110	C-CARBON R	RN72K1J-681FE	1	435036812R1		
VD8258	R6111	C-CARBON R	RN72K1J-272FE	1	435032722R1		
VD8258	R6112	C-CARBON R	RN72K1J-272FE	1	435032722R1		
VD8258	R6113	C-CARBON R	RN72K1J-681FE	1	435036812R1		
VD8258	R6114	C-CARBON R	RN72K1J-681FE	1	435036812R1		
VD8258	R6115	C-CARBON R	RN72K1J-103FE	1	435031032R1		
VD8258	R6117	C-CARBON R	RN72K1J-000JE	1	435030004R1		
VD8258	R6119	C-CARBON R	RN72K1J-000JE	1	435030004R1		
VD8258	R6120	C-CARBON R	RN72K1J-473FE	1	435034732R1		
VD8258	R6121	C-CARBON R	RN72K1J-122FE	1	435031222R1		
VD8258	R6122	C-CARBON R	RN72K1J-122FE	1	435031222R1		

VD8258	R6123	C-CARBON R	RN72K1J-102FE	1	435031022R1	
VD8258	R6124	C-CARBON R	RN72K1J-102FE	1	435031022R1	
VD8258	R6125	C-CARBON R	RN72K1J-102FE	1	435031022R1	
VD8258	R6127	C-CARBON R	RN72K1J-102FE	1	435031022R1	
VD8258	R6128	C-CARBON R	RN72K1J-102FE	1	435031022R1	
VD8258	R6129	C-CARBON R	RN72K1J-102FE	1	435031022R1	
VD8258	R6130	C-CARBON R	RN72K1J-102FE	1	435031022R1	
VD8258	R6133	C-CARBON R	RN72K1J-152FE	1	435031522R1	
VD8258	R6134	C-CARBON R	RN72K1J-103FE	1	435031032R1	
VD8258	R6135	C-CARBON R	RN72K1J-000JE	1	435030004R1	
VD8258	R6136	C-CARBON R	RN72K1J-224FE	1	435032242R1	
VD8258	R6137	C-CARBON R	RN72K1J-221FE	1	435032212R1	
VD8258	R6138	C-CARBON R	RN72K1J-000JE	1	435030004R1	
VD8258	R6140	C-CARBON R	RN72K1J-564FE	1	435035642R1	
VD8258	R6142	C-CARBON R	RN72K1J-102FE	1	435031022R1	
VD8258	R6143	C-CARBON R	RN72K1J-102FE	1	435031022R1	
VD8258	R6144	C-CARBON R	RN72K1J-102FE	1	435031022R1	
VD8258	R6146	C-CARBON R	RN72K1J-101FE	1	435031012R1	
VD8258	R6147	C-CARBON R	RN72K1J-101FE	1	435031012R1	
VD8258-1H	R6148	C-CARBON R	RN72K1J-000JE	1	435030004R1	**<PP2P>**
VD8258-1H	R6149	C-CARBON R	RN72K1J-000JE	1	435030004R1	**<PP2P>**
VD8258-1H	R6150	C-CARBON R	RN72K1J-000JE	1	435030004R1	**<PP2P>**
VD8258	R6151	C-CARBON R	RN72K1J-331FE	1	435033312R1	
VD8258	R6152	C-CARBON R	RN72K1J-332FE	1	435033322R1	
VD8258	R6153	C-CARBON R	RN72K1J-102FE	1	435031022R1	
VD8258	R6154	C-CARBON R	RN72K1J-471FE	1	435034712R1	
VD8258	R6155	C-CARBON R	RN72K1J-273FE	1	435032732R1	
VD8258	R6156	C-CARBON R	RN72K1J-273FE	1	435032732R1	
VD8258	R6157	C-CARBON R	RN72K1J-332FE	1	435033322R1	
VD8258	R6158	C-CARBON R	RN72K1J-151FE	1	435031512R1	
VD8258	R6159	C-CARBON R	RN72K1J-102FE	1	435031022R1	
VD8258	R6160	C-CARBON R	RN72K1J-203FE	1	435032032R1	
VD8258	R6162	C-CARBON R	RN72K1J-240FE	1	435032402R1	

VD8258	R6164	C-CARBON R	RN72K1J-103FE	1	435031032R1	
VD8258	R6165	C-CARBON R	RN72K1J-750FE	1	435037502R1	
VD8258	R6166	C-CARBON R	RN72K1J-000JE	1	435030004R1	
VD8258	R6167	C-CARBON R	RN72K1J-000JE	1	435030004R1	
VD8258-1H	R6170	C-CARBON R	RN72K1J-000JE	1	435030004R1	**<PP2P>**
VD8258	R6171	C-CARBON R	RN72K1J-102FE	1	435031022R1	
VD8258	R6172	C-CARBON R	RN72K1J-203FE	1	435032032R1	
VD8258	R6174	C-CARBON R	RN72K1J-240FE	1	435032402R1	
VD8258	R6176	C-CARBON R	RN72K1J-103FE	1	435031032R1	
VD8258	R6177	C-CARBON R	RN72K1J-750FE	1	435037502R1	
VD8258-1H	R6178	C-CARBON R	RN72K1J-000JE	1	435030004R1	**<PP2P>**
VD8258-1H	R6179	C-CARBON R	RN72K1J-000JE	1	435030004R1	**<PP2P>**
VD8258-1H	R6180	C-CARBON R	RN72K1J-000JE	1	435030004R1	**<PP2P>**
VD8258	R6191	C-CARBON R	RN72K1J-101JE	1	435031014R1	
VD8258	R6201	C-CARBON R	RN72K1J-331FE	1	435033312R1	
VD8258	R6202	C-CARBON R	RN72K1J-332FE	1	435033322R1	
VD8258	R6203	C-CARBON R	RN72K1J-102FE	1	435031022R1	
VD8258	R6204	C-CARBON R	RN72K1J-471FE	1	435034712R1	
VD8258	R6205	C-CARBON R	RN72K1J-273FE	1	435032732R1	
VD8258	R6206	C-CARBON R	RN72K1J-273FE	1	435032732R1	
VD8258	R6207	C-CARBON R	RN72K1J-332FE	1	435033322R1	
VD8258	R6208	C-CARBON R	RN72K1J-151FE	1	435031512R1	
VD8258	R6209	C-CARBON R	RN72K1J-102FE	1	435031022R1	
VD8258	R6210	C-CARBON R	RN72K1J-223FE	1	435032232R1	
VD8258	R6212	C-CARBON R	RN72K1J-240FE	1	435032402R1	
VD8258	R6214	C-CARBON R	RN72K1J-103FE	1	435031032R1	
VD8258	R6215	C-CARBON R	RN72K1J-750FE	1	435037502R1	
VD8258	R6216	C-CARBON R	RN72K1J-000JE	1	435030004R1	
VD8258	R6217	C-CARBON R	RN72K1J-000JE	1	435030004R1	
VD8258-1H	R6220	C-CARBON R	RN72K1J-000JE	1	435030004R1	**<PP2P>**
VD8258	R6221	C-CARBON R	RN72K1J-102FE	1	435031022R1	
VD8258	R6222	C-CARBON R	RN72K1J-223FE	1	435032232R1	
VD8258	R6224	C-CARBON R	RN72K1J-240FE	1	435032402R1	

VD8258	R6226	C-CARBON R	RN72K1J-103FE	1	435031032R1	
VD8258	R6227	C-CARBON R	RN72K1J-750FE	1	435037502R1	
VD8258	R6233	C-CARBON R	RN72K1J-000JE	1	435030004R1	
VD8258	R6251	C-CARBON R	RN72K1J-331FE	1	435033312R1	
VD8258	R6252	C-CARBON R	RN72K1J-332FE	1	435033322R1	
VD8258	R6253	C-CARBON R	RN72K1J-102FE	1	435031022R1	
VD8258	R6254	C-CARBON R	RN72K1J-471FE	1	435034712R1	
VD8258	R6255	C-CARBON R	RN72K1J-273FE	1	435032732R1	
VD8258	R6256	C-CARBON R	RN72K1J-273FE	1	435032732R1	
VD8258	R6257	C-CARBON R	RN72K1J-332FE	1	435033322R1	
VD8258	R6258	C-CARBON R	RN72K1J-151FE	1	435031512R1	
VD8258	R6259	C-CARBON R	RN72K1J-102FE	1	435031022R1	
VD8258	R6260	C-CARBON R	RN72K1J-223FE	1	435032232R1	
VD8258	R6262	C-CARBON R	RN72K1J-240FE	1	435032402R1	
VD8258	R6264	C-CARBON R	RN72K1J-103FE	1	435031032R1	
VD8258	R6265	C-CARBON R	RN72K1J-750FE	1	435037502R1	
VD8258	R6266	C-CARBON R	RN72K1J-822FE	1	435038222R1	
VD8258	R6267	C-CARBON R	RN72K1J-122FE	1	435031222R1	
VD8258	R6268	C-CARBON R	RN72K1J-122FE	1	435031222R1	
VD8258	R6269	C-CARBON R	RN72K1J-122FE	1	435031222R1	
VD8258-1H	R6270	C-CARBON R	RN72K1J-000JE	1	435030004R1	**<PP2P>**
VD8258	R6271	C-CARBON R	RN72K1J-102FE	1	435031022R1	
VD8258	R6272	C-CARBON R	RN72K1J-223FE	1	435032232R1	
VD8258	R6274	C-CARBON R	RN72K1J-240FE	1	435032402R1	
VD8258	R6276	C-CARBON R	RN72K1J-103FE	1	435031032R1	
VD8258	R6277	C-CARBON R	RN72K1J-750FE	1	435037502R1	
VD8258	R6278	C-CARBON R	RN72K1J-822FE	1	435038222R1	
VD8258	R6279	C-CARBON R	RN72K1J-122FE	1	435031222R1	
VD8258	R6286	C-CARBON R	RN72K1J-000JE	1	435030004R1	
VD8258	R6287	C-CARBON R	RN72K1J-000JE	1	435030004R1	
VD8258	R6301	C-CARBON R	RN72K1J-331FE	1	435033312R1	
VD8258	R6302	C-CARBON R	RN72K1J-332FE	1	435033322R1	
VD8258	R6303	C-CARBON R	RN72K1J-102FE	1	435031022R1	

VD8258	R6304	C-CARBON R	RN72K1J-471FE	1	435034712R1	
VD8258	R6305	C-CARBON R	RN72K1J-273FE	1	435032732R1	
VD8258	R6306	C-CARBON R	RN72K1J-273FE	1	435032732R1	
VD8258	R6307	C-CARBON R	RN72K1J-332FE	1	435033322R1	
VD8258	R6308	C-CARBON R	RN72K1J-151FE	1	435031512R1	
VD8258	R6309	C-CARBON R	RN72K1J-102FE	1	435031022R1	
VD8258	R6310	C-CARBON R	RN72K1J-203FE	1	435032032R1	
VD8258	R6312	C-CARBON R	RN72K1J-240FE	1	435032402R1	
VD8258	R6314	C-CARBON R	RN72K1J-103FE	1	435031032R1	
VD8258	R6315	C-CARBON R	RN72K1J-750FE	1	435037502R1	
VD8258-1H	R6316	C-CARBON R	RN72K1J-000JE	1	435030004R1	**<PP2P>**
VD8258	R6317	C-CARBON R	RN72K1J-000JE	1	435030004R1	
VD8258	R6351	C-CARBON R	RN72K1J-331FE	1	435033312R1	
VD8258	R6352	C-CARBON R	RN72K1J-332FE	1	435033322R1	
VD8258	R6353	C-CARBON R	RN72K1J-102FE	1	435031022R1	
VD8258	R6354	C-CARBON R	RN72K1J-471FE	1	435034712R1	
VD8258	R6355	C-CARBON R	RN72K1J-273FE	1	435032732R1	
VD8258	R6356	C-CARBON R	RN72K1J-223FE	1	435032232R1	
VD8258	R6357	C-CARBON R	RN72K1J-000JE	1	435030004R1	
VD8258	R6358	C-CARBON R	RN72K1J-151FE	1	435031512R1	
VD8258	R6359	C-CARBON R	RN72K1J-102FE	1	435031022R1	
VD8258	R6360	C-CARBON R	RN72K1J-243FE	1	435032432R1	
VD8258	R6362	C-CARBON R	RN72K1J-240FE	1	435032402R1	
VD8258	R6364	C-CARBON R	RN72K1J-103FE	1	435031032R1	
VD8258	R6365	C-CARBON R	RN72K1J-750FE	1	435037502R1	
VD8258-1H	R6366	C-CARBON R	RN72K1J-000JE	1	435030004R1	**<PP2P>**
VD8258	R6367	C-CARBON R	RN72K1J-000JE	1	435030004R1	
VD8258	R6401	C-CARBON R	RN72K1J-331FE	1	435033312R1	
VD8258	R6402	C-CARBON R	RN72K1J-332FE	1	435033322R1	
VD8258	R6403	C-CARBON R	RN72K1J-102FE	1	435031022R1	
VD8258	R6404	C-CARBON R	RN72K1J-471FE	1	435034712R1	
VD8258	R6405	C-CARBON R	RN72K1J-273FE	1	435032732R1	
VD8258	R6406	C-CARBON R	RN72K1J-223FE	1	435032232R1	

VD8258	R6407	C-CARBON R	RN72K1J-000JE	1	435030004R1	
VD8258	R6408	C-CARBON R	RN72K1J-151FE	1	435031512R1	
VD8258	R6409	C-CARBON R	RN72K1J-102FE	1	435031022R1	
VD8258	R6410	C-CARBON R	RN72K1J-243FE	1	435032432R1	
VD8258	R6412	C-CARBON R	RN72K1J-240FE	1	435032402R1	
VD8258	R6414	C-CARBON R	RN72K1J-103FE	1	435031032R1	
VD8258	R6415	C-CARBON R	RN72K1J-750FE	1	435037502R1	
VD8258-1H	R6416	C-CARBON R	RN72K1J-000JE	1	435030004R1	**<PP2P>**
VD8258	R6417	C-CARBON R	RN72K1J-000JE	1	435030004R1	
VD8258	R6455	C-CARBON R	RN72K1J-222FE	1	435032222R1	
VD8258	R6456	C-CARBON R	RN72K1J-222FE	1	435032222R1	
VD8258	R6457	C-CARBON R	RN72K1J-222FE	1	435032222R1	
VD8258	R6458	C-CARBON R	RN72K1J-222FE	1	435032222R1	
VD8258	R6459	C-CARBON R	RN72K1J-471FE	1	435034712R1	
VD8258	R6460	C-CARBON R	RN72K1J-471FE	1	435034712R1	
VD8258	R6461	C-CARBON R	RN72K1J-101FE	1	435031012R1	
VD8258	R6462	C-CARBON R	RN72K1J-101FE	1	435031012R1	
VD8258	R6465	C-CARBON R	RN72K1J-103FE	1	435031032R1	
VD8258	R6466	C-CARBON R	RN72K1J-223FE	1	435032232R1	
VD8258	R6467	C-CARBON R	RN72K1J-000JE	1	435030004R1	
VD8258	R6468	C-CARBON R	RN72K1J-000JE	1	435030004R1	
VD8258	R6469	C-CARBON R	RN72K1J-000JE	1	435030004R1	
VD8258	R6470	C-CARBON R	RN72K1J-000JE	1	435030004R1	
VD8258	R6471	C-CARBON R	RN72K1J-000JE	1	435030004R1	
VD8258	R6472	C-CARBON R	RN72K1J-000JE	1	435030004R1	
VD8258	R6501	C-CARBON R	RN72K1J-103FE	1	435031032R1	
VD8258	R6503	C-CARBON R	RN72K1J-122FE	1	435031222R1	
VD8258	R6504	C-CARBON R	RN72K1J-122FE	1	435031222R1	
VD8258	R6505	C-CARBON R	RN72K1J-103FE	1	435031032R1	
VD8258	R6506	C-CARBON R	RN72K1J-000JE	1	435030004R1	
VD8258	R6507	C-CARBON R	RN72K1J-102FE	1	435031022R1	
VD8258	R6508	C-CARBON R	RN72K1J-681FE	1	435036812R1	
VD8258	R6509	C-CARBON R	RN72K1J-272FE	1	435032722R1	

VD8258	R6510	C-CARBON R	RN72K1J-681FE	1	435036812R1
VD8258	R6511	C-CARBON R	RN72K1J-681FE	1	435036812R1
VD8258	R6512	C-CARBON R	RN72K1J-272FE	1	435032722R1
VD8258	R6513	C-CARBON R	RN72K1J-681FE	1	435036812R1
VD8258	R6514	C-CARBON R	RN72K1J-681FE	1	435036812R1
VD8258	R6515	C-CARBON R	RN72K1J-103FE	1	435031032R1
VD8258	R6516	C-CARBON R	RN72K1J-103FE	1	435031032R1
VD8258	R6517	C-CARBON R	RN72K1J-103FE	1	435031032R1
VD8258	R6518	C-CARBON R	RN72K1J-000JE	1	435030004R1
VD8258	R6519	C-CARBON R	RN72K1J-473FE	1	435034732R1
VD8258	R6521	C-CARBON R	RN72K1J-152FE	1	435031522R1
VD8258	R6522	C-CARBON R	RN72K1J-153FE	1	435031532R1
VD8258	R6523	C-CARBON R	RN72K1J-000JE	1	435030004R1
VD8258	R6524	C-CARBON R	RN72K1J-104FE	1	435031042R1
VD8258	R6525	C-CARBON R	RN72K1J-564FE	1	435035642R1
VD8258	R6526	C-CARBON R	RN72K1J-684FE	1	435036842R1
VD8258	R6527	C-CARBON R	RN72K1J-000JE	1	435030004R1
VD8258	R6529	C-CARBON R	RN72K1J-221FE	1	435032212R1
VD8258	R6530	C-CARBON R	RN72K1J-102FE	1	435031022R1
VD8258	R6531	C-CARBON R	RN72K1J-102FE	1	435031022R1
VD8258	R6532	C-CARBON R	RN72K1J-102FE	1	435031022R1
VD8258	R6533	C-CARBON R	RN72K1J-102FE	1	435031022R1
VD8258	R6541	C-CARBON R	RN72K1J-331FE	1	435033312R1
VD8258	R6542	C-CARBON R	RN72K1J-332FE	1	435033322R1
VD8258	R6543	C-CARBON R	RN72K1J-331FE	1	435033312R1
VD8258	R6544	C-CARBON R	RN72K1J-332FE	1	435033322R1
VD8258	R6545	C-CARBON R	RN72K1J-331FE	1	435033312R1
VD8258	R6546	C-CARBON R	RN72K1J-332FE	1	435033322R1
VD8258	R6547	C-CARBON R	RN72K1J-000JE	1	435030004R1
VD8258	R6548	C-CARBON R	RN72K1J-000JE	1	435030004R1
VD8258	R6549	C-CARBON R	RN72K1J-000JE	1	435030004R1
VD8258	R6551	C-CARBON R	RN72K1J-331FE	1	435033312R1
VD8258	R6552	C-CARBON R	RN72K1J-332FE	1	435033322R1

VD8258	R6553	C-CARBON R	RN72K1J-102FE	1	435031022R1			
VD8258	R6554	C-CARBON R	RN72K1J-471FE	1	435034712R1			
VD8258	R6555	C-CARBON R	RN72K1J-103FE	1	435031032R1			
VD8258	R6556	C-CARBON R	RN72K1J-102FE	1	435031022R1			
VD8258	R6557	C-CARBON R	RN72K1J-471FE	1	435034712R1			
VD8258	R6558	C-CARBON R	RN72K1J-273FE	1	435032732R1			
VD8258	R6559	C-CARBON R	RN72K1J-562FE	1	435035622R1			
VD8258	R6560	C-CARBON R	RN72K1J-821FE	1	435038212R1			
VD8258	R6561	C-CARBON R	RN72K1J-101FE	1	435031012R1			
VD8258	R6562	C-CARBON R	RN72K1J-471FE	1	435034712R1			
VD8258	R6563	C-CARBON R	RN72K1J-681FE	1	435036812R1			
VD8258	R6564	C-CARBON R	RN72K1J-682FE	1	435036822R1			
VD8258	R6565	C-CARBON R	RN72K1J-103FE	1	435031032R1			
VD8258	R6566	C-CARBON R	RN72K1J-122FE	1	435031222R1			
VD8258	R6567	C-CARBON R	RN72K1J-122FE	1	435031222R1			
VD8258	R6568	C-CARBON R	RN72K1J-101FE	1	435031012R1			
VD8258	R6571	C-CARBON R	RN72K1J-222FE	1	435032222R1			
VD8258	R6572	C-CARBON R	RN72K1J-222FE	1	435032222R1			
VD8258	R6573	C-CARBON R	RN72K1J-222FE	1	435032222R1			
VD8258-1J	R6574	C-CARBON R	RN72K1J-000JE	1	435030004R1		**<WT3P>**	
VD8258-1P	R6574	C-CARBON R	RN72K1J-000JE	1	435030004R1		**<GK3P>**	**< GR6P>**
VD8258-1H	R6574	C-CARBON R	RN72K1J-000JE	1	435030004R1		**< PP2P>**	
VD8258	R6575	C-CARBON R	RN72K1J-000JE	1	435030004R1			
VD8258	R6576	C-CARBON R	RN72K1J-270FE	1	435032702R1	N		
VD8258	R6601	C-CARBON R	RN72K1J-331FE	1	435033312R1			
VD8258	R6602	C-CARBON R	RN72K1J-332FE	1	435033322R1			
VD8258	R6603	C-CARBON R	RN72K1J-102FE	1	435031022R1			
VD8258	R6604	C-CARBON R	RN72K1J-471FE	1	435034712R1			
VD8258	R6605	C-CARBON R	RN72K1J-103FE	1	435031032R1			
VD8258	R6606	C-CARBON R	RN72K1J-102FE	1	435031022R1			
VD8258	R6607	C-CARBON R	RN72K1J-471FE	1	435034712R1			
VD8258	R6608	C-CARBON R	RN72K1J-273FE	1	435032732R1			
VD8258	R6609	C-CARBON R	RN72K1J-682FE	1	435036822R1			

VD8258	R6610	C-CARBON R	RN72K1J-101FE	1	435031012R1	
VD8258	R6611	C-CARBON R	RN72K1J-101FE	1	435031012R1	
VD8258	R6612	C-CARBON R	RN72K1J-471FE	1	435034712R1	
VD8258	R6613	C-CARBON R	RN72K1J-181FE	1	435031812R1	
VD8258	R6614	C-CARBON R	RN72K1J-821FE	1	435038212R1	
VD8258	R6615	C-CARBON R	RN72K1J-103FE	1	435031032R1	
VD8258	R6616	C-CARBON R	RN72K1J-122FE	1	435031222R1	
VD8258	R6617	C-CARBON R	RN72K1J-122FE	1	435031222R1	
VD8258	R6618	C-CARBON R	RN72K1J-101FE	1	435031012R1	
VD8258	R6626	C-CARBON R	RN72K1J-270FE	1	435032702R1	N
VD8258	R6631	C-CARBON R	RN72K1J-000JE	1	435030004R1	
VD8258	R6632	C-CARBON R	RN72K1J-000JE	1	435030004R1	
VD8258	R6633	C-CARBON R	RN72K1J-000JE	1	435030004R1	
VD8258	R6634	C-CARBON R	RN72K1J-000JE	1	435030004R1	
VD8258	R6635	C-CARBON R	RN72K1J-000JE	1	435030004R1	
VD8258	R6636	C-CARBON R	RN72K1J-000JE	1	435030004R1	
VD8258	R6637	C-CARBON R	RN72K1J-000JE	1	435030004R1	
VD8258	R6638	C-CARBON R	RN72K1J-000JE	1	435030004R1	
VD8258	R6639	C-CARBON R	RN72K1J-000JE	1	435030004R1	
VD8258	R6640	C-CARBON R	RN72K1J-000JE	1	435030004R1	
VD8258	R6651	C-CARBON R	RN72K1J-331FE	1	435033312R1	
VD8258	R6652	C-CARBON R	RN72K1J-332FE	1	435033322R1	
VD8258	R6653	C-CARBON R	RN72K1J-102FE	1	435031022R1	
VD8258	R6654	C-CARBON R	RN72K1J-471FE	1	435034712R1	
VD8258	R6655	C-CARBON R	RN72K1J-103FE	1	435031032R1	
VD8258	R6656	C-CARBON R	RN72K1J-102FE	1	435031022R1	
VD8258	R6657	C-CARBON R	RN72K1J-471FE	1	435034712R1	
VD8258	R6658	C-CARBON R	RN72K1J-273FE	1	435032732R1	
VD8258	R6659	C-CARBON R	RN72K1J-682FE	1	435036822R1	
VD8258	R6660	C-CARBON R	RN72K1J-101FE	1	435031012R1	
VD8258	R6661	C-CARBON R	RN72K1J-101FE	1	435031012R1	
VD8258	R6662	C-CARBON R	RN72K1J-471FE	1	435034712R1	
VD8258	R6663	C-CARBON R	RN72K1J-331FE	1	435033312R1	

VD8258	R6664	C-CARBON R	RN72K1J-472FE	1	435034722R1			
VD8258	R6665	C-CARBON R	RN72K1J-103FE	1	435031032R1			
VD8258	R6666	C-CARBON R	RN72K1J-122FE	1	435031222R1			
VD8258	R6667	C-CARBON R	RN72K1J-122FE	1	435031222R1			
VD8258	R6676	C-CARBON R	RN72K1J-270FE	1	435032702R1	N		
VD8258-1G	R6763	C-CARBON R	RN72K1J-103JE	1	435031034R1		**<DC1N>**	
VD8258-1G	R6764	C-CARBON R	RN72K1J-103JE	1	435031034R1		**<DC1N>**	
VD8258-1G	R6765	C-CARBON R	RN72K1J-103JE	1	435031034R1		**<DC1N>**	
VD8258-1G	R6766	C-CARBON R	RN72K1J-102JE	1	435031024R1		**<DC1N>**	
VD8258-1G	R6767	C-CARBON R	RN72K1J-240FE	1	435032402R1		**<DC1N>**	
VD8258-1G	R6768	C-CARBON R	RN72K1J-105JE	1	435031054R1		**<DC1N>**	
VD8258-1G	R6769	C-CARBON R	RN72K1J-105JE	1	435031054R1		**<DC1N>**	
VD8258-1G	R6770	C-CARBON R	RN72K1J-240FE	1	435032402R1		**<DC1N>**	
VD8258-1G	R6771	C-CARBON R	RN72K1J-105JE	1	435031054R1		**<DC1N>**	
VD8258-1G	R6772	C-CARBON R	RN72K1J-105JE	1	435031054R1		**<DC1N>**	
VD8258-1G	R6773	C-CARBON R	RN72K1J-102JE	1	435031024R1		**<DC1N>**	
VD8258-1G	R6774	C-CARBON R	RN72K1J-102JE	1	435031024R1		**<DC1N>**	
VD8258-1G	R6775	C-CARBON R	RN72K1J-105JE	1	435031054R1		**<DC1N>**	
VD8258-1G	R6776	C-CARBON R	RN72K1J-105JE	1	435031054R1		**<DC1N>**	
VD8258-1G	R6777	C-CARBON R	RN72K1J-240FE	1	435032402R1		**<DC1N>**	
VD8258-1G	R6778	C-CARBON R	RN72K1J-750JE	1	435037504R1		**<DC1N>**	
VD8258-1G	R6779	C-CARBON R	RN72K1J-750JE	1	435037504R1		**<DC1N>**	
VD8258-1G	R6780	C-CARBON R	RN72K1J-750JE	1	435037504R1		**<DC1N>**	
VD8258-1J	R6851	C-CARBON R	RN72K1J-103JE	1	435031034R1		**<WT3P>**	
VD8258-1P	R6851	C-CARBON R	RN72K1J-103JE	1	435031034R1		**<GK3P>**	**< GR6P>**
VD8258-1H	R6851	C-CARBON R	RN72K1J-103JE	1	435031034R1		**< PP2P>**	
VD8258-1J	R6852	C-CARBON R	RN72K1J-103JE	1	435031034R1		**<WT3P>**	
VD8258-1P	R6852	C-CARBON R	RN72K1J-103JE	1	435031034R1		**<GK3P>**	**< GR6P>**
VD8258-1H	R6852	C-CARBON R	RN72K1J-103JE	1	435031034R1		**< PP2P>**	
VD8258-1J	R6853	C-CARBON R	RN72K1J-103JE	1	435031034R1		**<WT3P>**	
VD8258-1P	R6853	C-CARBON R	RN72K1J-103JE	1	435031034R1		**<GK3P>**	**< GR6P>**
VD8258-1H	R6853	C-CARBON R	RN72K1J-103JE	1	435031034R1		**< PP2P>**	
VD8258-1J	R6854	C-CARBON R	RN72K1J-102JE	1	435031024R1		**<WT3P>**	

VD8258-1P	R6854	C-CARBON R	RN72K1J-102JE	1	435031024R1	<**GK3P**>	< **GR6P**>
VD8258-1H	R6854	C-CARBON R	RN72K1J-102JE	1	435031024R1	< **PP2P**>	
VD8258-1J	R6855	C-CARBON R	RN72K1J-240FE	1	435032402R1	<**WT3P**>	
VD8258-1P	R6855	C-CARBON R	RN72K1J-240FE	1	435032402R1	<**GK3P**>	< **GR6P**>
VD8258-1H	R6855	C-CARBON R	RN72K1J-240FE	1	435032402R1	< **PP2P**>	
VD8258-1J	R6856	C-CARBON R	RN72K1J-105JE	1	435031054R1	<**WT3P**>	
VD8258-1P	R6856	C-CARBON R	RN72K1J-105JE	1	435031054R1	<**GK3P**>	< **GR6P**>
VD8258-1H	R6856	C-CARBON R	RN72K1J-105JE	1	435031054R1	< **PP2P**>	
VD8258-1J	R6857	C-CARBON R	RN72K1J-105JE	1	435031054R1	<**WT3P**>	
VD8258-1P	R6857	C-CARBON R	RN72K1J-105JE	1	435031054R1	<**GK3P**>	< **GR6P**>
VD8258-1H	R6857	C-CARBON R	RN72K1J-105JE	1	435031054R1	< **PP2P**>	
VD8258-1J	R6858	C-CARBON R	RN72K1J-240FE	1	435032402R1	<**WT3P**>	
VD8258-1P	R6858	C-CARBON R	RN72K1J-240FE	1	435032402R1	<**GK3P**>	< **GR6P**>
VD8258-1H	R6858	C-CARBON R	RN72K1J-240FE	1	435032402R1	< **PP2P**>	
VD8258-1J	R6859	C-CARBON R	RN72K1J-105JE	1	435031054R1	<**WT3P**>	
VD8258-1P	R6859	C-CARBON R	RN72K1J-105JE	1	435031054R1	<**GK3P**>	< **GR6P**>
VD8258-1H	R6859	C-CARBON R	RN72K1J-105JE	1	435031054R1	< **PP2P**>	
VD8258-1J	R6860	C-CARBON R	RN72K1J-105JE	1	435031054R1	<**WT3P**>	
VD8258-1P	R6860	C-CARBON R	RN72K1J-105JE	1	435031054R1	<**GK3P**>	< **GR6P**>
VD8258-1H	R6860	C-CARBON R	RN72K1J-105JE	1	435031054R1	< **PP2P**>	
VD8258-1J	R6861	C-CARBON R	RN72K1J-102JE	1	435031024R1	<**WT3P**>	
VD8258-1P	R6861	C-CARBON R	RN72K1J-102JE	1	435031024R1	<**GK3P**>	< **GR6P**>
VD8258-1H	R6861	C-CARBON R	RN72K1J-102JE	1	435031024R1	< **PP2P**>	
VD8258-1J	R6862	C-CARBON R	RN72K1J-102JE	1	435031024R1	<**WT3P**>	
VD8258-1P	R6862	C-CARBON R	RN72K1J-102JE	1	435031024R1	<**GK3P**>	< **GR6P**>
VD8258-1H	R6862	C-CARBON R	RN72K1J-102JE	1	435031024R1	< **PP2P**>	
VD8258-1J	R6863	C-CARBON R	RN72K1J-105JE	1	435031054R1	<**WT3P**>	
VD8258-1P	R6863	C-CARBON R	RN72K1J-105JE	1	435031054R1	<**GK3P**>	< **GR6P**>
VD8258-1H	R6863	C-CARBON R	RN72K1J-105JE	1	435031054R1	< **PP2P**>	
VD8258-1J	R6864	C-CARBON R	RN72K1J-105JE	1	435031054R1	<**WT3P**>	
VD8258-1P	R6864	C-CARBON R	RN72K1J-105JE	1	435031054R1	<**GK3P**>	< **GR6P**>
VD8258-1H	R6864	C-CARBON R	RN72K1J-105JE	1	435031054R1	< **PP2P**>	
VD8258-1J	R6865	C-CARBON R	RN72K1J-240FE	1	435032402R1	<**WT3P**>	

VD8258-1P	R6865	C-CARBON R	RN72K1J-240FE	1	435032402R1	**<GK3P>**	**< GR6P>**
VD8258-1H	R6865	C-CARBON R	RN72K1J-240FE	1	435032402R1	**< PP2P>**	
VD8258-1J	R6866	C-CARBON R	RN72K1J-750JE	1	435037504R1	**<WT3P>**	
VD8258-1P	R6866	C-CARBON R	RN72K1J-750JE	1	435037504R1	**<GK3P>**	**< GR6P>**
VD8258-1H	R6866	C-CARBON R	RN72K1J-750JE	1	435037504R1	**< PP2P>**	
VD8258-1J	R6867	C-CARBON R	RN72K1J-750JE	1	435037504R1	**<WT3P>**	
VD8258-1P	R6867	C-CARBON R	RN72K1J-750JE	1	435037504R1	**<GK3P>**	**< GR6P>**
VD8258-1H	R6867	C-CARBON R	RN72K1J-750JE	1	435037504R1	**< PP2P>**	
VD8258-1J	R6868	C-CARBON R	RN72K1J-750JE	1	435037504R1	**<WT3P>**	
VD8258-1P	R6868	C-CARBON R	RN72K1J-750JE	1	435037504R1	**<GK3P>**	**< GR6P>**
VD8258-1H	R6868	C-CARBON R	RN72K1J-750JE	1	435037504R1	**< PP2P>**	
VD8258-1G	R6869	C-CARBON R	RN72K1J-471JE	1	435034714R1	**<DC1N>**	
VD8258-1G	R6870	C-CARBON R	RN72K1J-471JE	1	435034714R1	**<DC1N>**	
VD8258-1G	R6871	C-CARBON R	RN72K1J-471JE	1	435034714R1	**<DC1N>**	
VD8258-1G	R6872	C-CARBON R	RN72K1J-471JE	1	435034714R1	**<DC1N>**	
VD8258-1G	R6873	C-CARBON R	RN72K1J-471JE	1	435034714R1	**<DC1N>**	
VD8258-1G	R6874	C-CARBON R	RN72K1J-471JE	1	435034714R1	**<DC1N>**	
VD8258	R7001	C-CARBON R	RN72K1J-220FE	1	435032202R1		
VD8258	R7002	C-CARBON R	RN72K1J-220FE	1	435032202R1		
VD8258	R7003	C-CARBON R	RN72K1J-220FE	1	435032202R1		
VD8258	R7004	C-CARBON R	RN72K1J-220FE	1	435032202R1		
VD8258	R7005	C-CARBON R	RN72K1J-220FE	1	435032202R1		
VD8258	R7006	C-CARBON R	RN72K1J-220FE	1	435032202R1		
VD8258	R7007	C-CARBON R	RN72K1J-220FE	1	435032202R1		
VD8258	R7008	C-CARBON R	RN72K1J-103FE	1	435031032R1		
VD8258	R7009	C-CARBON R	RN72K1J-103FE	1	435031032R1		
VD8258	R7010	C-CARBON R	RN72K1J-220FE	1	435032202R1		
VD8258	R7011	C-CARBON R	RN72K1J-220FE	1	435032202R1		
VD8258	R7012	C-CARBON R	RN72K1J-220FE	1	435032202R1		
VD8258	R7013	C-CARBON R	RN72K1J-102FE	1	435031022R1		
VD8258	R7014	C-CARBON R	RN72K1J-102FE	1	435031022R1		
VD8258	R7015	C-CARBON R	RN72K1J-220FE	1	435032202R1		
VD8258	R7016	C-CARBON R	RN72K1J-220FE	1	435032202R1		

VD8258	R7017	C-CARBON R	RN72K1J-220FE	1	435032202R1
VD8258	R7018	C-CARBON R	RN72K1J-103FE	1	435031032R1
VD8258	R7020	C-CARBON R	RN72K1J-102FE	1	435031022R1
VD8258	R7021	C-CARBON R	RN72K1J-220FE	1	435032202R1
VD8258	R7022	C-CARBON R	RN72K1J-220FE	1	435032202R1
VD8258	R7023	C-CARBON R	RN72K1J-220FE	1	435032202R1
VD8258	R7024	C-CARBON R	RN72K1J-220FE	1	435032202R1
VD8258	R7025	C-CARBON R	RN72K1J-220FE	1	435032202R1
VD8258	R7026	C-CARBON R	RN72K1J-220FE	1	435032202R1
VD8258	R7027	C-CARBON R	RN72K1J-220FE	1	435032202R1
VD8258	R7028	C-CARBON R	RN72K1J-103FE	1	435031032R1
VD8258	R7029	C-CARBON R	RN72K1J-220FE	1	435032202R1
VD8258	R7030	C-CARBON R	RN72K1J-103FE	1	435031032R1
VD8258	R7031	C-CARBON R	RN72K1J-220FE	1	435032202R1
VD8258	R7032	C-CARBON R	RN72K1J-220FE	1	435032202R1
VD8258	R7033	C-CARBON R	RN72K1J-103FE	1	435031032R1
VD8258	R7034	C-CARBON R	RN72K1J-220FE	1	435032202R1
VD8258	R7035	C-CARBON R	RN72K1J-103FE	1	435031032R1
VD8258	R7036	C-CARBON R	RN72K1J-220FE	1	435032202R1
VD8258	R7037	C-CARBON R	RN72K1J-220FE	1	435032202R1
VD8258	R7038	C-CARBON R	RN72K1J-220FE	1	435032202R1
VD8258	R7039	C-CARBON R	RN72K1J-220FE	1	435032202R1
VD8258	R7040	C-CARBON R	RN72K1J-220FE	1	435032202R1
VD8258	R7041	C-CARBON R	RN72K1J-102FE	1	435031022R1
VD8258	R7042	C-CARBON R	RN72K1J-102FE	1	435031022R1
VD8258	R7043	C-CARBON R	RN72K1J-102FE	1	435031022R1
VD8258	R7044	C-CARBON R	RN72K1J-102FE	1	435031022R1
VD8258	R7045	C-CARBON R	RN72K1J-102FE	1	435031022R1
VD8258	R7046	C-CARBON R	RN72K1J-102FE	1	435031022R1
VD8258	R7047	C-CARBON R	RN72K1J-102FE	1	435031022R1
VD8258	R7048	C-CARBON R	RN72K1J-102FE	1	435031022R1
VD8258	R7049	C-CARBON R	RN72K1J-221FE	1	435032212R1
VD8258	R7050	C-CARBON R	RN72K1J-221FE	1	435032212R1

VD8258	R7051	C-CARBON R	RN72K1J-221FE	1	435032212R1		
VD8258	R7052	C-CARBON R	RN72K1J-221FE	1	435032212R1		
VD8258	R7053	C-CARBON R	RN72K1J-221FE	1	435032212R1		
VD8258	R7054	C-CARBON R	RN72K1J-221FE	1	435032212R1		
VD8258	R7055	C-CARBON R	RN72K1J-472FE	1	435034722R1		
VD8258	R7056	C-CARBON R	RN72K1J-472FE	1	435034722R1		
VD8258	R7057	C-CARBON R	RN72K1J-472FE	1	435034722R1		
VD8258	R7058	C-CARBON R	RN72K1J-472FE	1	435034722R1		
VD8258	R7059	C-CARBON R	RN72K1J-273FE	1	435032732R1		
VD8258-1G	R7060	C-CARBON R	RN72K1J-333FE	1	435033332R1	**<DC1N>**	
VD8258-1J	R7060	C-CARBON R	RN72K1J-683FE	1	435036832R1	**<WT3P>**	
VD8258-1P	R7060	C-CARBON R	RN72K1J-683FE	1	435036832R1	**<GK3P>**	**< GR6P>**
VD8258-1H	R7060	C-CARBON R	RN72K1J-683FE	1	435036832R1	**< PP2P>**	
VD8258	R7061	C-CARBON R	RN72K1J-472FE	1	435034722R1		
VD8258-1G	R7062	C-CARBON R	RN72K1J-103FE	1	435031032R1	**<DC1N>**	
VD8258-1J	R7062	C-CARBON R	RN72K1J-333FE	1	435033332R1	**<WT3P>**	
VD8258-1H	R7062	C-CARBON R	RN72K1J-822FE	1	435038222R1	**< PP2P>**	
VD8258-1G	R7063	C-CARBON R	RN72K1J-563FE	1	435035632R1	**<DC1N>**	
VD8258-1J	R7063	C-CARBON R	RN72K1J-562FE	1	435035622R1	**<WT3P>**	
VD8258-1P	R7063	C-CARBON R	RN72K1J-103FE	1	435031032R1	**<GK3P>**	**< GR6P>**
VD8258-1H	R7063	C-CARBON R	RN72K1J-562FE	1	435035622R1	**< PP2P>**	
VD8258	R7064	C-CARBON R	RN72K1J-220FE	1	435032202R1		
VD8258	R7069	C-CARBON R	RN72K1J-103FE	1	435031032R1		
VD8258	R7071	C-CARBON R	RN72K1J-103FE	1	435031032R1		
VD8258	R7073	C-CARBON R	RN72K1J-103FE	1	435031032R1		
VD8258	R7075	C-CARBON R	RN72K1J-103FE	1	435031032R1		
VD8258	R7077	C-CARBON R	RN72K1J-103FE	1	435031032R1		
VD8258	R7078	C-CARBON R	RN72K1J-103FE	1	435031032R1		
VD8258	R7079	C-CARBON R	RN72K1J-472FE	1	435034722R1		
VD8258	R7080	C-CARBON R	RN72K1J-472FE	1	435034722R1		
VD8258	R7101	C-CARBON R	RN72K1J-000JE	1	435030004R1		
VD8258	R7102	C-CARBON R	RN72K1J-000JE	1	435030004R1		
VD8258	R7103	C-CARBON R	RN72K1J-000JE	1	435030004R1		

VD8258	R7104	C-CARBON R	RN72K1J-000JE	1	435030004R1	
VD8258	R7105	C-CARBON R	RN72K1J-000JE	1	435030004R1	
VD8258	R7106	C-CARBON R	RN72K1J-000JE	1	435030004R1	
VD8258	R7107	C-CARBON R	RN72K1J-000JE	1	435030004R1	
VD8258	R7108	C-CARBON R	RN72K1J-000JE	1	435030004R1	
VD8258	R7109	C-CARBON R	RN72K1J-000JE	1	435030004R1	
VD8258	R7110	C-CARBON R	RN72K1J-000JE	1	435030004R1	
VD8258	R7111	C-CARBON R	RN72K1J-000JE	1	435030004R1	
VD8258	R7112	C-CARBON R	RN72K1J-000JE	1	435030004R1	
VD8258	R7113	C-CARBON R	RN72K1J-000JE	1	435030004R1	
VD8258	R7114	C-CARBON R	RN72K1J-000JE	1	435030004R1	
VD8258	R7115	C-CARBON R	RN72K1J-000JE	1	435030004R1	
VD8258	R7116	C-CARBON R	RN72K1J-000JE	1	435030004R1	
VD8258	R7117	C-CARBON R	RN72K1J-000JE	1	435030004R1	
VD8258	R7118	C-CARBON R	RN72K1J-000JE	1	435030004R1	
VD8258	R7119	C-CARBON R	RN72K1J-000JE	1	435030004R1	
VD8258	R7120	C-CARBON R	RN72K1J-000JE	1	435030004R1	
VD8258	R7121	C-CARBON R	RN72K1J-000JE	1	435030004R1	
VD8258	R7122	C-CARBON R	RN72K1J-000JE	1	435030004R1	
VD8258	R7123	C-CARBON R	RN72K1J-000JE	1	435030004R1	
VD8258	R7124	C-CARBON R	RN72K1J-000JE	1	435030004R1	
VD8258	R7125	C-CARBON R	RN72K1J-000JE	1	435030004R1	
VD8258	R7126	C-CARBON R	RN72K1J-000JE	1	435030004R1	
VD8258	R7127	C-CARBON R	RN72K1J-000JE	1	435030004R1	
VD8258	R7128	C-CARBON R	RN72K1J-000JE	1	435030004R1	
VD8258	R7129	C-CARBON R	RN72K1J-000JE	1	435030004R1	
VD8258	R7130	C-CARBON R	RN72K1J-000JE	1	435030004R1	
VD8258	R7131	C-CARBON R	RN72K1J-000JE	1	435030004R1	
VD8258	R7132	C-CARBON R	RN72K1J-000JE	1	435030004R1	
VD8258	R7133	C-CARBON R	RN72K1J-000JE	1	435030004R1	
VD8258	R7134	C-CARBON R	RN72K1J-000JE	1	435030004R1	
VD8258	R7201	C-CARBON R	RN72K1J-220FE	1	435032202R1	
VD8258-1J	R7202	C-CARBON R	RN72K1J-220FE	1	435032202R1	**<WT3P>**

VD8258-1P	R7202	C-CARBON R	RN72K1J-220FE	1	435032202R1	**<GK3P> <<GR6P>**
VD8258-1H	R7202	C-CARBON R	RN72K1J-220FE	1	435032202R1	**<PP2P>**
VD8258-1J	R7203	C-CARBON R	RN72K1J-220FE	1	435032202R1	**<WT3P>**
VD8258-1P	R7203	C-CARBON R	RN72K1J-220FE	1	435032202R1	**<GK3P> <<GR6P>**
VD8258-1H	R7203	C-CARBON R	RN72K1J-220FE	1	435032202R1	**<PP2P>**
VD8258-1J	R7204	C-CARBON R	RN72K1J-220FE	1	435032202R1	**<WT3P>**
VD8258-1P	R7204	C-CARBON R	RN72K1J-220FE	1	435032202R1	**<GK3P> <<GR6P>**
VD8258-1H	R7204	C-CARBON R	RN72K1J-220FE	1	435032202R1	**<PP2P>**
VD8258-1J	R7205	C-CARBON R	RN72K1J-472FE	1	435034722R1	**<WT3P>**
VD8258-1P	R7205	C-CARBON R	RN72K1J-472FE	1	435034722R1	**<GK3P> <<GR6P>**
VD8258-1H	R7205	C-CARBON R	RN72K1J-472FE	1	435034722R1	**<PP2P>**
VD8258	R7206	C-CARBON R	RN72K1J-224FE	1	435032242R1	
VD8258	R7207	C-CARBON R	RN72K1J-473FE	1	435034732R1	
VD8258	R7208	C-CARBON R	RN72K1J-000JE	1	435030004R1	
VD8258	R7209	C-CARBON R	RN72K1J-000JE	1	435030004R1	
VD8258	R7210	C-CARBON R	RN72K1J-000JE	1	435030004R1	
VD8258	R7211	C-CARBON R	RN72K1J-000JE	1	435030004R1	
VD8258	R7212	C-CARBON R	RN72K1J-000JE	1	435030004R1	
VD8258	R7213	C-CARBON R	RN72K1J-000JE	1	435030004R1	
VD8258	R7214	C-CARBON R	RN72K1J-000JE	1	435030004R1	
VD8258	R7215	C-CARBON R	RN72K1J-000JE	1	435030004R1	
VD8258	R7216	C-CARBON R	RN72K1J-000JE	1	435030004R1	
VD8258	R7217	C-CARBON R	RN72K1J-000JE	1	435030004R1	
VD8258	R7218	C-CARBON R	RN72K1J-471JE	1	435034714R1	
VD8258-1G	R7219	C-CARBON R	RN72K1J-472JE	1	435034724R1	**<DC1N>**
VD8258-1G	R7220	C-CARBON R	RN72K1J-472JE	1	435034724R1	**<DC1N>**
VD8258	R7301	C-CARBON R	RN72K1J-103FE	1	435031032R1	
VD8258	R7302	C-CARBON R	RN72K1J-223FE	1	435032232R1	
VD8258	R7303	C-CARBON R	RN72K1J-223FE	1	435032232R1	
VD8258	R7304	C-CARBON R	RN72K1J-103FE	1	435031032R1	
VD8258	R7305	C-CARBON R	RN72K1J-102FE	1	435031022R1	
VD8258	R7306	C-CARBON R	RN72K1J-104FE	1	435031042R1	
VD8258	R7310	C-CARBON R	RN72K1J-103FE	1	435031032R1	

VD8258	R7311	C-CARBON R	RN72K1J-103FE	1	435031032R1	
VD8258	R7312	C-CARBON R	RN72K1J-103FE	1	435031032R1	
VD8258	R7313	C-CARBON R	RN72K1J-103FE	1	435031032R1	
VD8258	R7314	C-CARBON R	RN72K1J-102FE	1	435031022R1	
VD8258	R7315	C-CARBON R	RN72K1J-103FE	1	435031032R1	
VD8258	R7317	C-CARBON R	RN72K1J-470FE	1	435034702R1	
VD8258	R7318	C-CARBON R	RN72K1J-470FE	1	435034702R1	
VD8258	R7319	C-CARBON R	RN72K1J-470FE	1	435034702R1	
VD8258	R7320	C-CARBON R	RN72K1J-470FE	1	435034702R1	
VD8258	R7321	C-CARBON R	RN72K1J-470FE	1	435034702R1	
VD8258	R7322	C-CARBON R	RN72K1J-470FE	1	435034702R1	
VD8258	R7401	C-CARBON R	RN72K1J-152FE	1	435031522R1	
VD8258	R7402	C-CARBON R	RN72K1J-152FE	1	435031522R1	
VD8258	R7403	C-CARBON R	RN72K1J-000JE	1	435030004R1	
VD8258	R7404	C-CARBON R	RN72K1J-000JE	1	435030004R1	
VD8258	R7405	C-CARBON R	RN72K1J-000JE	1	435030004R1	
VD8258	R7406	C-CARBON R	RN72K1J-224FE	1	435032242R1	
VD8258	S4751	SLIDE SW	NSS-22155	1	25065414	
VD8258	S7301	PUSH SW	NPS-111-S681	1	25035718	
VD8258	X6151	CRYSTAL	FCX03-20.000MHz	1	3010389R2	N
VD8258	X7001	CERA LOCK	CSTCE12M0G	1	3010395R2	N
VD8258	X7002	PIEZO	PKM13EPY-4002	1	3010309	

PRINTED CIRCUIT BOARD PARTS LIST

DV-SP1000

U07: DISPLAY PC BOARD NADIS-8264
U08: HD-COMPONENT OUTPUT PC BOARD NAVD-8265
U09: AUDIO OUTPUT PC BOARD NAAF-8266
U10: JOG SWITCH PC BOARD NASW-8267

PWB NO.	CIRCUIT NO.	PART NAME	DESCRIPTION		PART NO.	REMARKS
DIS8264	C4201	VX C	CE04W25V-470M(VX)	1	393354717	
DIS8264	C4202	VX C	CE04W25V-470M(VX)	1	393354717	
DIS8264	C4203	VX C	CE04W16V-220M(VX)	1	393342217	
DIS8264	C4204	VX C	CE04W16V-220M(VX)	1	393342217	

DIS8264	C4205	VX C	CE04W16V-220M(VX)	1	393342217		
DIS8264	C4206	VX C	CE04W16V-220M(VX)	1	393342217		
DIS8264	C4701	VX C	CE04W16V-47M(VX)	1	393344707		
DIS8264	C4702	VX C	CE04W16V-47M(VX)	1	393344707		
DIS8264	C4705	RFS C	CE04W25V-47M(RFS)	1	395954707	N	
DIS8264	C4706	RFS C	CE04W25V-47M(RFS)	1	395954707	N	
DIS8264	C4753	VX C	CE04W50V-47M(VX)	1	393384707		
DIS8264	C4754	VX C	CE04W50V-47M(VX)	1	393384707		
DIS8264	C4755	C-CERA C	CK725F1E-104Z1	1	332161040R1		
DIS8264	C4803	RFS C	CE04W25V-47M(RFS)	1	395954707	N	
DIS8264	C4804	RFS C	CE04W25V-47M(RFS)	1	395954707	N	
DIS8264	C4853	VX C	CE04W50V-47M(VX)	1	393384707		
DIS8264	C4854	VX C	CE04W50V-47M(VX)	1	393384707		
DIS8264	C4903	VX C	CE04W50V-47M(VX)	1	393384707		
DIS8264	C4904	VX C	CE04W50V-47M(VX)	1	393384707		
DIS8264	C4921	VX C	CE04W6.3V-470M(VX)	1	393324717		
DIS8264	C4951	C-CERA C	CK725F1E-104Z1	1	332161040R1		
DIS8264	C4952	C-CERA C	CK725F1E-104Z1	1	332161040R1		
DIS8264	C4953	C-CERA C	CK725B1H-103K1	1	332101035R1		
DIS8264	C4954	C-CERA C	CK725B1H-103K1	1	332101035R1		
DIS8264	C4955	VX C	CE04W6.3V-100M(VX)	1	393321017		
DIS8264	C4956	VX C	CE04W6.3V-100M(VX)	1	393321017		
DIS8264-1E	C4957	C-CERA C	CK725F1E-104Z1	1	332161040R1		**<PP2P>**
DIS8264-1F	C4957	C-CERA C	CK725F1E-104Z1	1	332161040R1		**<WT3P> <GK3P> <GR6P>**
DIS8264-1E	C4958	VX C	CE04W6.3V-100M(VX)	1	393321017		**<PP2P>**
DIS8264-1F	C4958	VX C	CE04W6.3V-100M(VX)	1	393321017		**<WT3P> <GK3P> <GR6P>**
DIS8264	C4959	C-CERA C	CK732B1H 223K	1	337322235R1		
DIS8264	C4960	C-CERA C	CC725CH1H-330J1	1	342103304R1		
DIS8264	C4961	C-CERA C	CC725CH1H-330J1	1	342103304R1		
DIS8264	C4962	C-CERA C	CC725CH1H-330J1	1	342103304R1		
DIS8264	C4965	C-CERA C	CK725F1E-104Z1	1	332161040R1		
DIS8264	C4966	VX C	CE04W6.3V-100M(VX)	1	393321017		
DIS8264	C4967	C-CERA C	CK725F1E-104Z1	1	332161040R1		
DIS8264	C4968	VX C	CE04W6.3V-100M(VX)	1	393321017		
DIS8264	C4969	C-CERA C	CK725F1E-104Z1	1	332161040R1		
DIS8264	C4970	C-CERA C	CK725F1E-104Z1	1	332161040R1		
DIS8264	C4971	C-CERA C	CK725F1E-104Z1	1	332161040R1		
DIS8264	C4972	C-CERA C	CK725F1E-104Z1	1	332161040R1		
DIS8264	C4973	C-CERA C	CK725F1E-104Z1	1	332161040R1		
DIS8264	C4974	C-CERA C	CK725F1E-104Z1	1	332161040R1		
DIS8264	C4975	C-CERA C	CC725CH1H-220J1	1	342102204R1		
DIS8264	C4976	C-CERA C	CC725CH1H-220J1	1	342102204R1		
DIS8264	C4977	VX C	CE04W6.3V-470M(VX)	1	393324717		

DIS8264	C4978	VX C	CE04W6.3V-470M(VX)	1	393324717	
DIS8264	C4999	C-CERA C	CK725F1E-104Z1	1	332161040R1	
DIS8264-1E	C6781	C-CERA C	CK725F1E-104Z1	1	332161040R1	**<PP2P>**
DIS8264-1F	C6781	C-CERA C	CK725F1E-104Z1	1	332161040R1	**<WT3P> <GK3P> <GR6P>**
DIS8264-1E	C6901	CHIP ELECT C	CEWX6.3V-100M	1	356721019R2	**<PP2P>**
DIS8264-1E	C6902	C-CERA C	CK725F1E-104Z1	1	332161040R1	**<PP2P>**
DIS8264-1E	C6903	CHIP ELECT C	CEWX6.3V-100M	1	356721019R2	**<PP2P>**
DIS8264-1E	C6904	C-CERA C	CK725F1E-104Z1	1	332161040R1	**<PP2P>**
DIS8264-1E	C6905	CHIP ELECT C	CEWX6.3V-100M	1	356721019R2	**<PP2P>**
DIS8264-1E	C6906	C-CERA C	CK725F1E-104Z1	1	332161040R1	**<PP2P>**
DIS8264-1E	C6907	CHIP ELECT C	CEWX6.3V-100M	1	356721019R2	**<PP2P>**
DIS8264-1E	C6908	C-CERA C	CK725F1E-104Z1	1	332161040R1	**<PP2P>**
DIS8264-1E	C6909	CHIP ELECT C	CEWT6.3V-1000M	1	395721027R2	**<PP2P>**
DIS8264-1E	C6910	CHIP ELECT C	CEWT6.3V-1000M	1	395721027R2	**<PP2P>**
DIS8264-1E	C6911	CHIP ELECT C	CEWT6.3V-1000M	1	395721027R2	**<PP2P>**
DIS8264-1E	C6912	CHIP ELECT C	CEWT6.3V-1000M	1	395721027R2	**<PP2P>**
DIS8264-1E	C6913	C-CERA C	CK725F1E-104Z1	1	332161040R1	**<PP2P>**
DIS8264-1E	C6914	C-CERA C	CK725F1E-104Z1	1	332161040R1	**<PP2P>**
DIS8264-1E	C6915	C-CERA C	CK725F1E-104Z1	1	332161040R1	**<PP2P>**
DIS8264-1E	C6916	C-CERA C	CK725F1E-104Z1	1	332161040R1	**<PP2P>**
DIS8264-1E	C6917	CHIP ELECT C	CEWX16V-47M	1	356744709R2	**<PP2P>**
DIS8264-1E	C6918	C-CERA C	CK725F1E-104Z1	1	332161040R1	**<PP2P>**
DIS8264-1E	C6919	CHIP ELECT C	CEWX16V-47M	1	356744709R2	**<PP2P>**
DIS8264-1E	C6920	C-CERA C	CK725F1E-104Z1	1	332161040R1	**<PP2P>**
DIS8264-1E	C6922	C-CERA C	CK725F1E-104Z1	1	332161040R1	**<PP2P>**
DIS8264-1E	C6923	C-CERA C	CC725CH1E-102J1	1	342111024R1	**<PP2P>**
DIS8264-1E	C6924	C-CERA C	CC725CH1H-101J1	1	342101014R1	**<PP2P>**
DIS8264-1E	C6925	C-CERA C	CC725CH1H-101J1	1	342101014R1	**<PP2P>**
DIS8264-1E	C6926	CHIP ELECT C	CEWX16V-10M	1	356741009R2	**<PP2P>**
DIS8264-1E	C6927	CHIP ELECT C	CEWX16V-10M	1	356741009R2	**<PP2P>**
DIS8264-1E	C6928	CHIP ELECT C	CEWT6.3V-470M	1	395724717R2	**<PP2P>**
DIS8264-1E	C6929	C-CERA C	CK725F1E-104Z1	1	332161040R1	**<PP2P>**
DIS8264	C7501	C-CERA C	CK725F1E-104Z1	1	332161040R1	
DIS8264	C7502	C-CERA C	CK725F1E-104Z1	1	332161040R1	
DIS8264	C7503	C-CERA C	CK725F1E-104Z1	1	332161040R1	
DIS8264	C7504	C-CERA C	CK725F1E-104Z1	1	332161040R1	
DIS8264	C7505	CHIP ELECT C	CEWX6.3V-100M	1	356721019R2	
DIS8264	C7506	C-CERA C	CK725B1H-223K1	1	332102235R1	
DIS8264	C7507	C-CERA C	CK725B1H-223K1	1	332102235R1	
DIS8264	C7508	C-CERA C	CK725B1H-223K1	1	332102235R1	
DIS8264	C7509	C-CERA C	CK725F1E-104Z1	1	332161040R1	
DIS8264	C7510	C-CERA C	CK725F1E-104Z1	1	332161040R1	
DIS8264	C7511	C-CERA C	CK725F1E-104Z1	1	332161040R1	
DIS8264	C7512	C-CERA C	CK725F1E-104Z1	1	332161040R1	

DIS8264	C7513	C-CERA C	CK725F1E-104Z1	1	332161040R1		
DIS8264	C7515	CHIP ELECT C	CEWX50V-2.2M	1	356780229R2		
DIS8264	C7516	CHIP ELECT C	CEWX16V-10M	1	356741009R2		
DIS8264	C7517	C-CERA C	CK725F1E-104Z1	1	332161040R1		
DIS8264	C7518	C-CERA C	CK725F1E-104Z1	1	332161040R1		
DIS8264	C7519	C-CERA C	CK725F1E-104Z1	1	332161040R1		
DIS8264	C7520	CHIP ELECT C	CEWX16V-100M	1	356741019R2		
DIS8264	C7521	CHIP ELECT C	CEWX50V-10M	1	356781009R2		
DIS8264	C7522	C-CERA C	CC725CH1H-330J1	1	342103304R1		
DIS8264	C7528	CHIP ELECT C	CEWX6.3V-100M	1	356721019R2		
DIS8264	C7529	C-CERA C	CK725F1E-104Z1	1	332161040R1		
DIS8264-1E	C7530	C-CERA C	CK725F1E-104Z1	1	332161040R1		**<PP2P>**
DIS8264-1F	C7530	C-CERA C	CK725F1E-104Z1	1	332161040R1		**<WT3P> <GK3P> <GR6P>**
DIS8264-1E	C7531	C-CERA C	CK725F1E-104Z1	1	332161040R1		**<PP2P>**
DIS8264-1F	C7531	C-CERA C	CK725F1E-104Z1	1	332161040R1		**<WT3P> <GK3P> <GR6P>**
DIS8264	C7702	C-CERA C	CK725F1E-104Z1	1	332161040R1		
DIS8264	C7703	CHIP ELECT C	CEWX6.3V-100M	1	356721019R2		
DIS8264	D4201	ZENER D	UDZS13B	1	224551300R2	N	
DIS8264	D4202	ZENER D	UDZS13B	1	224551300R2	N	
DIS8264	D4751	C-DIODE	1SS352	1	223234R2		
DIS8264	D4751 or	C-DIODE	1SS355	(1)	223269R2		
DIS8264	D4752	C-DIODE	1SS352	1	223234R2		
DIS8264	D4752 or	C-DIODE	1SS355	(1)	223269R2		
DIS8264	D4851	C-DIODE	1SS352	1	223234R2		
DIS8264	D4851 or	C-DIODE	1SS355	(1)	223269R2		
DIS8264	D4852	C-DIODE	1SS352	1	223234R2		
DIS8264	D4852 or	C-DIODE	1SS355	(1)	223269R2		
DIS8264	D4921	C-DIODE	1SS352	1	223234R2		
DIS8264	D4921 or	C-DIODE	1SS355	(1)	223269R2		
DIS8264	D4951	C-DIODE	1SS352	1	223234R2		
DIS8264	D4951 or	C-DIODE	1SS355	(1)	223269R2		
DIS8264	D4952	C-DIODE	1SS352	1	223234R2		
DIS8264	D4952 or	C-DIODE	1SS355	(1)	223269R2		
DIS8264	D4953	C-DIODE	1SS352	1	223234R2		
DIS8264	D4953 or	C-DIODE	1SS355	(1)	223269R2		
DIS8264-1E	D6781	C-DIODE	1SS352	1	223234R2		**<PP2P>**
DIS8264-1F	D6781	C-DIODE	1SS352	1	223234R2		**<WT3P> <GK3P> <GR6P>**
DIS8264-1E	D6781 or	C-DIODE	1SS355	(1)	223269R2		**<PP2P>**
DIS8264-1F	D6781 or	C-DIODE	1SS355	(1)	223269R2		**<WT3P> <GK3P> <GR6P>**
DIS8264-1E	D6901	C-DIODE	1SS226	1	223266R2		**<PP2P>**
DIS8264-1E	D6902	C-DIODE	1SS226	1	223266R2		**<PP2P>**

DIS8264-1E	D6903	C-DIODE	1SS226	1	223266R2		**<PP2P>**
DIS8264-1E	D6904	C-DIODE	1SS226	1	223266R2		**<PP2P>**
DIS8264-1E	D6905	C-DIODE	1SS226	1	223266R2		**<PP2P>**
DIS8264-1E	D6906	C-DIODE	1SS352	1	223234R2		**<PP2P>**
DIS8264-1E	D6906 or	C-DIODE	1SS355	(1)	223269R2		**<PP2P>**
DIS8264	D7501	LED	SEL2E10C	1	225374		
DIS8264	D7503	LED	SEL2E10C	1	225374		
DIS8264	D7505	LED	SEL2E10C	1	225374		
DIS8264	D7507	C-DIODE	1SS352	1	223234R2		
DIS8264	D7507 or	C-DIODE	1SS355	(1)	223269R2		
DIS8264	D7508	ZENER D	UDZ2.4B	1	224490240R2		
DIS8264	D7509	LED	SEL2E10C	1	225374		
DIS8264-1E	D7510	LED	SEL2910A-TP6	1	225390		**<PP2P>**
DIS8264-1F	D7510	LED	SEL2910A-TP6	1	225390		**<WT3P> <GK3P> <GR6P>**
DIS8264-1E	D7511	LED	SEL2910A-TP6	1	225390		**<PP2P>**
DIS8264-1F	D7511	LED	SEL2910A-TP6	1	225390		**<WT3P> <GK3P> <GR6P>**
DIS8264	D7701	LED	SEL4110R	1	225290		
DIS8264	E4602	CLAMP	WS-2NS	1	27300833		
DIS8264	E4603	CLAMP	WS-2NS	1	27300833		
DIS8264	E4953	RETAINER	KANAGU(ｱｰｽ)	1	27141059		
DIS8264	L4951	CHOKE COIL	NCH-1471	1	231237M022R2		
DIS8264	L4952	CHOKE COIL	NCH-1471	1	231237M022R2		
DIS8264	L4953	CHOKE COIL	NCH-1471	1	231237M022R2		
DIS8264	L4954	CHOKE COIL	NCH-1471	1	231237M022R2		
DIS8264	L4955	CHOKE COIL	NCH-1471	1	231237M022R2		
DIS8264-1E	L4956	CHOKE COIL	NCH-1571	1	233530R2		**<PP2P>**
DIS8264-1F	L4956	CHOKE COIL	NCH-1571	1	233530R2		**<WT3P> <GK3P> <GR6P>**
DIS8264	L4999	EMIFIL	BK1608LM182-T	1	230958R1		
DIS8264-1E	L6905	CHOKE COIL	NCH-1471	1	231237M022R2		**<PP2P>**
DIS8264	P4005B	PLUG	NPLG-5P119	1	25055135		EH TOP::::
DIS8264	P4011	BUS BAR	BBL40	1	27141867		
DIS8264	P4202B	PLUG	BM15B-SRSS-TB	1	25056378R2	N	
DIS8264	P4203B	PLUG	NPLG-14P1111	1	25056172R2	N	
DIS8264-1E	P4204B	PLUG	NPLG-10P923	1	25055970R2		**<PP2P>**
DIS8264	P4571B	PLUG	NPLG-8P1105	1	25056166R2	N	
DIS8264	P4950B	PLUG	NPLG-7P135	1	25055151		
DIS8264	P4955	PIN JACK	NPJ-2PDB400	1	25045589		
DIS8264-1E	P4956	ST JACK	HSJ1002-01-1020	1	25045647		**<PP2P>**
DIS8264-1F	P4956	ST JACK	HSJ1002-01-1020	1	25045647		**<WT3P> <GK3P> <GR6P>**
DIS8264	P4958	PIN JACK	NPJ-1PDOR442	1	25045636		
DIS8264	P4959	PIN JACK	NPJ-1PDOR442	1	25045636		

DIS8264	P4960	PIN JACK	NPJ-2PDWR404	1	25045593		
DIS8264	P4961	PIN JACK	NPJ-6PDWRLEGP506	1	25045715		
DIS8264	P4964	PIN JACK	NPJ-2PDLE507	1	25045716		
DIS8264-1E	P6005B	PLUG	NPLG-8P1105	1	25056166R2		**<PP2P>**
DIS8264-1F	P6005B	PLUG	NPLG-8P1105	1	25056166R2		**<WT3P> <GK3P> <GR6P>**
DIS8264-1E	P6302B	PLUG	NPLG-7P1104	1	25056165R2		**<PP2P>**
DIS8264-1E	P6303B	PLUG	NPLG-6P1103	1	25056164R2		**<PP2P>**
DIS8264-1E	P6551B	PLUG	NPLG-9P1106	1	25056167R2		**<PP2P>**
DIS8264-1F	P6551B	PLUG	NPLG-9P1106	1	25056167R2		**<WT3P> <GK3P> <GR6P>**
DIS8264-1E	P6703A	PLUG	NPLG-10P1107	1	25056168R2		**<PP2P>**
DIS8264-1F	P6703A	PLUG	NPLG-10P1107	1	25056168R2		**<WT3P> <GK3P> <GR6P>**
DIS8264-1E	P6781	ST JACK	HSJ1501-011010	1	25045581R2		**<PP2P>**
DIS8264-1F	P6781	ST JACK	HSJ1501-011010	1	25045581R2		**<WT3P> <GK3P> <GR6P>**
DIS8264-1E	P6901	SOCKET	YKF-41-5051	1	25052957		**<PP2P>**
DIS8264-1E	P7010B	PLUG	NPLG-4P1101	1	25056162R2		**<PP2P>**
DIS8264-1F	P7010B	PLUG	NPLG-4P1101	1	25056162R2		**<WT3P> <GK3P> <GR6P>**
DIS8264	P7201B	SOCKET	NSCT-26P2696	1	25052800R2	N	
DIS8264	P7801A	WIRE HOL	NSCT-12P883	1	25051096		
DIS8264	P7801B	WIRE TRAP	NPLG-12P595	1	25055633		
DIS8264	P7801C	JUMPER LEAD	UL2651#26	1	2J100606B15		
DIS8264	Q4201	TR	2SB1565-E	1	2202715		
DIS8264	Q4201 or	TR	2SB1565-F	(1)	2202716		
DIS8264	Q4201A	HEAT SINK	RAD-157	1	27160491		
DIS8264	Q4201B	SCREW	3P+10FN(BC)	1	82143010		
DIS8264	Q4202	TR	2SD2394-E	1	2202705		
DIS8264	Q4202 or	TR	2SD2394-F	(1)	2202706		
DIS8264	Q4202A	HEAT SINK	RAD-157	1	27160491		
DIS8264	Q4202B	SCREW	3P+10FN(BC)	1	82143010		
DIS8264	Q4203	TR	2SC2712-GR	1	2213145R2		
DIS8264	Q4204	TR	2SA1162-GR	1	2214375R2		
DIS8264	Q4207	TR	RN1407	1	2216260R2		
DIS8264	Q4207 or	TR	DTC114YKA	(1)	2216470R2		
DIS8264	Q4208	TR	DTC114YKA	1	2216470R2		
DIS8264	Q4701	IC	NJM4580M-D	1	22241448R2		
DIS8264	Q4702	TR	HN1C03F-B	1	2216141R2		
DIS8264	Q4703	TR	HN1C03F-B	1	2216141R2		
DIS8264	Q4704	TR	RN2403	1	2214540R2		
DIS8264	Q4704 or	TR	DTA124EKA	(1)	2216240R2		
DIS8264	Q4705	TR	RN2403	1	2214540R2		
DIS8264	Q4705 or	TR	DTA124EKA	(1)	2216240R2		

DIS8264	Q4751	IC	NJM4580M-D	1	22241448R2	
DIS8264	Q4752	TR	HN1C03F-B	1	2216141R2	
DIS8264	Q4753	TR	HN1C03F-B	1	2216141R2	
DIS8264	Q4755	TR	2SC2712-GR	1	2213145R2	
DIS8264	Q4756	TR	2SC2712-GR	1	2213145R2	
DIS8264	Q4757	TR	2SA1162-GR	1	2214375R2	
DIS8264	Q4758	TR	RN1407	1	2216260R2	
DIS8264	Q4758 or	TR	DTC114YKA	(1)	2216470R2	
DIS8264	Q4801	IC	NJM4580M-D	1	22241448R2	
DIS8264	Q4802	TR	HN1C03F-B	1	2216141R2	
DIS8264	Q4803	TR	HN1C03F-B	1	2216141R2	
DIS8264	Q4804	TR	RN2403	1	2214540R2	
DIS8264	Q4804 or	TR	DTA124EKA	(1)	2216240R2	
DIS8264	Q4805	TR	RN2403	1	2214540R2	
DIS8264	Q4805 or	TR	DTA124EKA	(1)	2216240R2	
DIS8264	Q4851	IC	NJM4580M-D	1	22241448R2	
DIS8264	Q4852	TR	HN1C03F-B	1	2216141R2	
DIS8264	Q4853	TR	HN1C03F-B	1	2216141R2	
DIS8264	Q4854	TR	RN2403	1	2214540R2	
DIS8264	Q4854 or	TR	DTA124EKA	(1)	2216240R2	
DIS8264	Q4855	TR	RN2403	1	2214540R2	
DIS8264	Q4855 or	TR	DTA124EKA	(1)	2216240R2	
DIS8264	Q4857	TR	2SC2712-GR	1	2213145R2	
DIS8264	Q4858	TR	2SC2712-GR	1	2213145R2	
DIS8264	Q4901	IC	NJM4580M-D	1	22241448R2	
DIS8264	Q4902	TR	HN1C03F-B	1	2216141R2	
DIS8264	Q4903	TR	HN1C03F-B	1	2216141R2	
DIS8264	Q4904	TR	RN2403	1	2214540R2	
DIS8264	Q4904 or	TR	DTA124EKA	(1)	2216240R2	
DIS8264	Q4905	TR	RN2403	1	2214540R2	
DIS8264	Q4905 or	TR	DTA124EKA	(1)	2216240R2	
DIS8264	Q4921	TR	2SA1162-GR	1	2214375R2	
DIS8264	Q4951	IC	74HCU04F	1	222740046R2	
DIS8264	Q4952	IC	74HCU04F	1	222740046R2	
DIS8264-1E	Q4953	TR	RN1402	1	2214470R2	**<PP2P>**
DIS8264-1F	Q4953	TR	RN1402	1	2214470R2	**<WT3P> <GK3P> <GR6P>**
DIS8264-1E	Q4953 or	TR	DTC114EKA	(1)	2216250R2	**<PP2P>**
DIS8264-1F	Q4953 or	TR	DTC114EKA	(1)	2216250R2	**<WT3P> <GK3P> <GR6P>**
DIS8264-1E	Q4954	TR	RN1402	1	2214470R2	**<PP2P>**
DIS8264-1F	Q4954	TR	RN1402	1	2214470R2	**<WT3P> <GK3P> <GR6P>**
DIS8264-1E	Q4954 or	TR	DTC114EKA	(1)	2216250R2	**<PP2P>**

DIS8264-1F	Q4954 or	TR	DTC114EKA	(1)	2216250R2		**<WT3P> <GK3P> <GR6P>**
DIS8264-1E	Q4955	PHT CP	PC817X	1	24120080		**<PP2P>**
DIS8264-1F	Q4955	PHT CP	PC817X	1	24120080		**<WT3P> <GK3P> <GR6P>**
DIS8264	Q4956	PHT CP	TOTX179	1	24120094		
DIS8264	Q4957	PHT CP	TOTX179	1	24120094		
DIS8264	Q4958	TR	2SA1162-GR	1	2214375R2		
DIS8264	Q4959	TR	2SA1162-GR	1	2214375R2		
DIS8264-1E	Q6781	TR	2SA1162-GR	1	2214375R2		**<PP2P>**
DIS8264-1F	Q6781	TR	2SA1162-GR	1	2214375R2		**<WT3P> <GK3P> <GR6P>**
DIS8264-1E	Q6782	TR	RN1402	1	2214470R2		**<PP2P>**
DIS8264-1F	Q6782	TR	RN1402	1	2214470R2		**<WT3P> <GK3P> <GR6P>**
DIS8264-1E	Q6782 or	TR	DTC114EKA	(1)	2216250R2		**<PP2P>**
DIS8264-1F	Q6782 or	TR	DTC114EKA	(1)	2216250R2		**<WT3P> <GK3P> <GR6P>**
DIS8264-1E	Q6783	PHT CP	PC817X	1	24120080		**<PP2P>**
DIS8264-1F	Q6783	PHT CP	PC817X	1	24120080		**<WT3P> <GK3P> <GR6P>**
DIS8264-1E	Q6901	IC	MAX4018ESD	1	22241440R2		**<PP2P>**
DIS8264-1E	Q6902	IC	MAX4018ESD	1	22241440R2		**<PP2P>**
DIS8264-1E	Q6903	IC	74AHCT1G08GW	1	22242072R2PH		**<PP2P>**
DIS8264-1E	Q6903 or	IC	TC7SET08FU	(1)	22242072R2TO		**<PP2P>**
DIS8264-1E	Q6904	IC	74AHCT1G04GW	1	22242079R2PH		**<PP2P>**
DIS8264-1E	Q6904 or	IC	TC7SET04FU	(1)	22242079R2TO		**<PP2P>**
DIS8264-1E	Q6905	IC	74AHCT1G08GW	1	22242072R2PH		**<PP2P>**
DIS8264-1E	Q6905 or	IC	TC7SET08FU	(1)	22242072R2TO		**<PP2P>**
DIS8264-1E	Q6906	IC	74AHCT1G08GW	1	22242072R2PH		**<PP2P>**
DIS8264-1E	Q6906 or	IC	TC7SET08FU	(1)	22242072R2TO		**<PP2P>**
DIS8264-1E	Q6907	TR	2SC2712-GR	1	2213145R2		**<PP2P>**
DIS8264-1E	Q6908	TR	HN1C01F-GR	1	2215925R2		**<PP2P>**
DIS8264-1E	Q6909	IC	NJM4565M-D	1	22241383R2		**<PP2P>**
DIS8264-1E	Q6910	TR	HN1C03F-B	1	2216141R2		**<PP2P>**
DIS8264-1E	Q6911	TR	2SA1162-GR	1	2214375R2		**<PP2P>**
DIS8264-1E	Q6912	IC	74AHCT1G08GW	1	22242072R2PH		**<PP2P>**
DIS8264-1E	Q6912 or	IC	TC7SET08FU	(1)	22242072R2TO		**<PP2P>**
DIS8264	Q7501	IC	MPD780232GC-091-8BT	1	22241989R3		
DIS8264	Q7502	FL TUBE	13-BT-211GNK	1	212247	N	
DIS8264	Q7502A	HOLDER	(FL)	1	27191114		
DIS8264	Q7503	TR	2SC2712-GR	1	2213145R2		
DIS8264	Q7504	TR	2SC2712-GR	1	2213145R2		
DIS8264	Q7505	TR	IMT1A	1	2216270R2		
DIS8264	Q7506	TR	IMT1A	1	2216270R2		

DIS8264	Q7507	TR	IMT1A	1	2216270R2	
DIS8264	Q7508	TR	RN1407	1	2216260R2	
DIS8264	Q7508 or	TR	DTC114YKA	(1)	2216470R2	
DIS8264	Q7509	TR	RN1407	1	2216260R2	
DIS8264	Q7509 or	TR	DTC114YKA	(1)	2216470R2	
DIS8264	Q7510	TR	RN1407	1	2216260R2	
DIS8264	Q7510 or	TR	DTC114YKA	(1)	2216470R2	
DIS8264-1D	Q7511	TR	IMT1A	1	2216270R2	**<DC1N>**
DIS8264-1E	Q7511	TR	IMT1A	1	2216270R2	**<PP2P>**
DIS8264-1F	Q7511	TR	IMT1A	1	2216270R2	**<WT3P> <GK3P> <GR6P>**
DIS8264-1D	Q7512	TR	RN1407	1	2216260R2	**<DC1N>**
DIS8264-1E	Q7512	TR	RN1407	1	2216260R2	**<PP2P>**
DIS8264-1F	Q7512	TR	RN1407	1	2216260R2	**<WT3P> <GK3P> <GR6P>**
DIS8264-1D	Q7512 or	TR	DTC114YKA	(1)	2216470R2	**<DC1N>**
DIS8264-1E	Q7512 or	TR	DTC114YKA	(1)	2216470R2	**<PP2P>**
DIS8264-1F	Q7512 or	TR	DTC114YKA	(1)	2216470R2	**<WT3P> <GK3P> <GR6P>**
DIS8264-1E	Q7513	TR	IMT1A	1	2216270R2	**<PP2P>**
DIS8264-1F	Q7513	TR	IMT1A	1	2216270R2	**<WT3P> <GK3P> <GR6P>**
DIS8264-1E	Q7514	TR	RN1407	1	2216260R2	**<PP2P>**
DIS8264-1F	Q7514	TR	RN1407	1	2216260R2	**<WT3P> <GK3P> <GR6P>**
DIS8264-1E	Q7514 or	TR	DTC114YKA	(1)	2216470R2	**<PP2P>**
DIS8264-1F	Q7514 or	TR	DTC114YKA	(1)	2216470R2	**<WT3P> <GK3P> <GR6P>**
DIS8264-1E	Q7515	TR	IMT1A	1	2216270R2	**<PP2P>**
DIS8264-1F	Q7515	TR	IMT1A	1	2216270R2	**<WT3P> <GK3P> <GR6P>**
DIS8264-1E	Q7516	TR	RN1407	1	2216260R2	**<PP2P>**
DIS8264-1F	Q7516	TR	RN1407	1	2216260R2	**<WT3P> <GK3P> <GR6P>**
DIS8264-1E	Q7516 or	TR	DTC114YKA	(1)	2216470R2	**<PP2P>**
DIS8264-1F	Q7516 or	TR	DTC114YKA	(1)	2216470R2	**<WT3P> <GK3P> <GR6P>**
DIS8264-1E	Q7517	TR	IMT1A	1	2216270R2	**<PP2P>**
DIS8264-1F	Q7517	TR	IMT1A	1	2216270R2	**<WT3P> <GK3P> <GR6P>**
DIS8264-1E	Q7518	TR	RN1407	1	2216260R2	**<PP2P>**
DIS8264-1F	Q7518	TR	RN1407	1	2216260R2	**<WT3P> <GK3P> <GR6P>**
DIS8264-1E	Q7518 or	TR	DTC114YKA	(1)	2216470R2	**<PP2P>**

DIS8264-1F	Q7518 or	TR	DTC114YKA	(1)	2216470R2	**<WT3P> <GK3P> <GR6P>**
DIS8264	Q7703	TR	RN1407	1	2216260R2	
DIS8264	Q7703 or	TR	DTC114YKA	(1)	2216470R2	
DIS8264	R4229	C-CARBON R	RN72K1J-103JE	1	435031034R1	
DIS8264	R4230	C-CARBON R	RN72K1J-103JE	1	435031034R1	
DIS8264	R4231	C-CARBON R	RN72K1J-103JE	1	435031034R1	
DIS8264	R4232	C-CARBON R	RN72K1J-103JE	1	435031034R1	
DIS8264	R4233	C-CARBON R	RN72K1J-103JE	1	435031034R1	
DIS8264	R4234	C-CARBON R	RN72K1J-103JE	1	435031034R1	
DIS8264	R4235	C-CARBON R	RN72K1J-471JE	1	435034714R1	
DIS8264	R4236	C-CARBON R	RN72K1J-471JE	1	435034714R1	
DIS8264	R4241	C-CARBON R	RN72K1J-101JE	1	435031014R1	
DIS8264	R4242	C-CARBON R	RN72K1J-101JE	1	435031014R1	
DIS8264	R4243	C-CARBON R	RN72K1J-103JE	1	435031034R1	
DIS8264	R4244	C-CARBON R	RN72K1J-223JE	1	435032234R1	
DIS8264	R4245	METAL O R	RS1/2WBJ-2.2	1	443520224	
DIS8264	R4246	METAL O R	RS1/2WBJ-2.2	1	443520224	
DIS8264	R4247	C-CARBON R	RN72K1J-103JE	1	435031034R1	
DIS8264	R4701	C-CARBON R	RN72K1J-102JE	1	435031024R1	
DIS8264	R4702	C-CARBON R	RN72K1J-102JE	1	435031024R1	
DIS8264	R4703	C-CARBON R	RN72K1J-102JE	1	435031024R1	
DIS8264	R4704	C-CARBON R	RN72K1J-102JE	1	435031024R1	
DIS8264	R4705	C-CARBON R	RN72K1J-473JE	1	435034734R1	
DIS8264	R4706	C-CARBON R	RN72K1J-473JE	1	435034734R1	
DIS8264	R4707	C-CARBON R	RN72K1J-222JE	1	435032224R1	
DIS8264	R4708	C-CARBON R	RN72K1J-222JE	1	435032224R1	
DIS8264	R4709	C-CARBON R	RN72K1J-101JE	1	435031014R1	
DIS8264	R4710	C-CARBON R	RN72K1J-101JE	1	435031014R1	
DIS8264	R4711	C-CARBON R	RN72K1J-222JE	1	435032224R1	
DIS8264	R4712	C-CARBON R	RN72K1J-222JE	1	435032224R1	
DIS8264	R4713	C-CARBON R	RN72K1J-221JE	1	435032214R1	
DIS8264	R4714	C-CARBON R	RN72K1J-221JE	1	435032214R1	
DIS8264	R4715	C-CARBON R	RN72K1J-105JE	1	435031054R1	
DIS8264	R4716	C-CARBON R	RN72K1J-105JE	1	435031054R1	
DIS8264	R4717	C-CARBON R	RN72K1J-684JE	1	435036844R1	
DIS8264	R4718	C-CARBON R	RN72K1J-684JE	1	435036844R1	
DIS8264	R4751	C-CARBON R	RN72K1J-102JE	1	435031024R1	
DIS8264	R4752	C-CARBON R	RN72K1J-102JE	1	435031024R1	
DIS8264	R4753	C-CARBON R	RN72K1J-102JE	1	435031024R1	
DIS8264	R4754	C-CARBON R	RN72K1J-102JE	1	435031024R1	
DIS8264	R4755	C-CARBON R	RN72K1J-473JE	1	435034734R1	
DIS8264	R4756	C-CARBON R	RN72K1J-473JE	1	435034734R1	
DIS8264	R4757	C-CARBON R	RN72K1J-222JE	1	435032224R1	
DIS8264	R4758	C-CARBON R	RN72K1J-222JE	1	435032224R1	

DIS8264	R4759	C-CARBON R	RN72K1J-221JE	1	435032214R1
DIS8264	R4760	C-CARBON R	RN72K1J-221JE	1	435032214R1
DIS8264	R4761	C-CARBON R	RN72K1J-103JE	1	435031034R1
DIS8264	R4762	C-CARBON R	RN72K1J-103JE	1	435031034R1
DIS8264	R4763	C-CARBON R	RN72K1J-221JE	1	435032214R1
DIS8264	R4764	C-CARBON R	RN72K1J-221JE	1	435032214R1
DIS8264	R4765	C-CARBON R	RN72K1J-103JE	1	435031034R1
DIS8264	R4766	C-CARBON R	RN72K1J-103JE	1	435031034R1
DIS8264	R4767	C-CARBON R	RN72K1J-272JE	1	435032724R1
DIS8264	R4768	C-CARBON R	RN72K1J-272JE	1	435032724R1
DIS8264	R4769	C-CARBON R	RN72K1J-105JE	1	435031054R1
DIS8264	R4770	C-CARBON R	RN72K1J-105JE	1	435031054R1
DIS8264	R4771	C-CARBON R	RN72K1J-684JE	1	435036844R1
DIS8264	R4772	C-CARBON R	RN72K1J-684JE	1	435036844R1
DIS8264	R4773	C-CARBON R	RN72K1J-105JE	1	435031054R1
DIS8264	R4774	C-CARBON R	RN72K1J-684JE	1	435036844R1
DIS8264	R4775	C-CARBON R	RN72K1J-182JE	1	435031824R1
DIS8264	R4776	C-CARBON R	RN72K1J-182JE	1	435031824R1
DIS8264	R4777	C-CARBON R	RN72K1J-272JE	1	435032724R1
DIS8264	R4778	C-CARBON R	RN72K1J-473JE	1	435034734R1
DIS8264	R4801	C-CARBON R	RN72K1J-102JE	1	435031024R1
DIS8264	R4802	C-CARBON R	RN72K1J-102JE	1	435031024R1
DIS8264	R4803	C-CARBON R	RN72K1J-102JE	1	435031024R1
DIS8264	R4804	C-CARBON R	RN72K1J-102JE	1	435031024R1
DIS8264	R4805	C-CARBON R	RN72K1J-473JE	1	435034734R1
DIS8264	R4806	C-CARBON R	RN72K1J-473JE	1	435034734R1
DIS8264	R4807	C-CARBON R	RN72K1J-222JE	1	435032224R1
DIS8264	R4808	C-CARBON R	RN72K1J-222JE	1	435032224R1
DIS8264	R4809	C-CARBON R	RN72K1J-101JE	1	435031014R1
DIS8264	R4810	C-CARBON R	RN72K1J-101JE	1	435031014R1
DIS8264	R4811	C-CARBON R	RN72K1J-222JE	1	435032224R1
DIS8264	R4812	C-CARBON R	RN72K1J-222JE	1	435032224R1
DIS8264	R4813	C-CARBON R	RN72K1J-221JE	1	435032214R1
DIS8264	R4814	C-CARBON R	RN72K1J-221JE	1	435032214R1
DIS8264	R4815	C-CARBON R	RN72K1J-105JE	1	435031054R1
DIS8264	R4816	C-CARBON R	RN72K1J-105JE	1	435031054R1
DIS8264	R4817	C-CARBON R	RN72K1J-684JE	1	435036844R1
DIS8264	R4818	C-CARBON R	RN72K1J-684JE	1	435036844R1
DIS8264	R4851	C-CARBON R	RN72K1J-102JE	1	435031024R1
DIS8264	R4852	C-CARBON R	RN72K1J-102JE	1	435031024R1
DIS8264	R4853	C-CARBON R	RN72K1J-102JE	1	435031024R1
DIS8264	R4854	C-CARBON R	RN72K1J-102JE	1	435031024R1
DIS8264	R4855	C-CARBON R	RN72K1J-473JE	1	435034734R1
DIS8264	R4856	C-CARBON R	RN72K1J-473JE	1	435034734R1
DIS8264	R4857	C-CARBON R	RN72K1J-222JE	1	435032224R1

DIS8264	R4858	C-CARBON R	RN72K1J-222JE	1	435032224R1
DIS8264	R4859	C-CARBON R	RN72K1J-101JE	1	435031014R1
DIS8264	R4860	C-CARBON R	RN72K1J-101JE	1	435031014R1
DIS8264	R4861	C-CARBON R	RN72K1J-222JE	1	435032224R1
DIS8264	R4862	C-CARBON R	RN72K1J-222JE	1	435032224R1
DIS8264	R4863	C-CARBON R	RN72K1J-221JE	1	435032214R1
DIS8264	R4864	C-CARBON R	RN72K1J-221JE	1	435032214R1
DIS8264	R4865	C-CARBON R	RN72K1J-105JE	1	435031054R1
DIS8264	R4866	C-CARBON R	RN72K1J-105JE	1	435031054R1
DIS8264	R4867	C-CARBON R	RN72K1J-684JE	1	435036844R1
DIS8264	R4868	C-CARBON R	RN72K1J-684JE	1	435036844R1
DIS8264	R4869	C-CARBON R	RN72K1J-103JE	1	435031034R1
DIS8264	R4870	C-CARBON R	RN72K1J-103JE	1	435031034R1
DIS8264	R4871	C-CARBON R	RN72K1J-272JE	1	435032724R1
DIS8264	R4872	C-CARBON R	RN72K1J-272JE	1	435032724R1
DIS8264	R4901	C-CARBON R	RN72K1J-102JE	1	435031024R1
DIS8264	R4902	C-CARBON R	RN72K1J-102JE	1	435031024R1
DIS8264	R4903	C-CARBON R	RN72K1J-102JE	1	435031024R1
DIS8264	R4904	C-CARBON R	RN72K1J-102JE	1	435031024R1
DIS8264	R4905	C-CARBON R	RN72K1J-473JE	1	435034734R1
DIS8264	R4906	C-CARBON R	RN72K1J-473JE	1	435034734R1
DIS8264	R4907	C-CARBON R	RN72K1J-222JE	1	435032224R1
DIS8264	R4908	C-CARBON R	RN72K1J-222JE	1	435032224R1
DIS8264	R4909	C-CARBON R	RN72K1J-101JE	1	435031014R1
DIS8264	R4910	C-CARBON R	RN72K1J-101JE	1	435031014R1
DIS8264	R4911	C-CARBON R	RN72K1J-222JE	1	435032224R1
DIS8264	R4912	C-CARBON R	RN72K1J-222JE	1	435032224R1
DIS8264	R4913	C-CARBON R	RN72K1J-221JE	1	435032214R1
DIS8264	R4914	C-CARBON R	RN72K1J-221JE	1	435032214R1
DIS8264	R4915	C-CARBON R	RN72K1J-105JE	1	435031054R1
DIS8264	R4916	C-CARBON R	RN72K1J-105JE	1	435031054R1
DIS8264	R4917	C-CARBON R	RN72K1J-684JE	1	435036844R1
DIS8264	R4918	C-CARBON R	RN72K1J-684JE	1	435036844R1
DIS8264	R4921	C-CARBON R	RN72K1J-103JE	1	435031034R1
DIS8264	R4922	C-CARBON R	RN72K1J-103JE	1	435031034R1
DIS8264	R4923	C-CARBON R	RN72K1J-105JE	1	435031054R1
DIS8264	R4924	C-CARBON R	RN72K1J-684JE	1	435036844R1
DIS8264	R4951	C-CARBON R	RN72K1J-000JE	1	435030004R1
DIS8264	R4954	C-CARBON R	RN72K1J-000JE	1	435030004R1
DIS8264	R4955	C-CARBON R	RN72K1J-104JE	1	435031044R1
DIS8264	R4956	C-CARBON R	RN72K1J-154JE	1	435031544R1
DIS8264	R4957	C-CARBON R	RN72K1J-104JE	1	435031044R1
DIS8264	R4958	C-CARBON R	RN72K1J-154JE	1	435031544R1
DIS8264	R4959	C-CARBON R	RN72K1J-223JE	1	435032234R1
DIS8264	R4960	C-CARBON R	RN72K1J-223JE	1	435032234R1

DIS8264-1E	R4961	C-CARBON R	RN72K1J-332JE	1	435033324R1	**<PP2P>**
DIS8264-1F	R4961	C-CARBON R	RN72K1J-332JE	1	435033324R1	**<WT3P> <GK3P> <GR6P>**
DIS8264	R4962	C-CARBON R	RN72K1J-471JE	1	435034714R1	
DIS8264-1E	R4963	C-CARBON R	RN72K1J-103JE	1	435031034R1	**<PP2P>**
DIS8264-1F	R4963	C-CARBON R	RN72K1J-103JE	1	435031034R1	**<WT3P> <GK3P> <GR6P>**
DIS8264-1E	R4964	C-CARBON R	RN72K1J-103JE	1	435031034R1	**<PP2P>**
DIS8264-1F	R4964	C-CARBON R	RN72K1J-103JE	1	435031034R1	**<WT3P> <GK3P> <GR6P>**
DIS8264	R4967	C-CARBON R	RN72K1J-331JE	1	435033314R1	
DIS8264	R4968	C-CARBON R	RN72K1J-331JE	1	435033314R1	
DIS8264-1E	R4969	C-CARBON R	RN72K1J-101JE	1	435031014R1	**<PP2P>**
DIS8264-1F	R4969	C-CARBON R	RN72K1J-101JE	1	435031014R1	**<WT3P> <GK3P> <GR6P>**
DIS8264	R4970	C-CARBON R	RN72K1J-181JE	1	435031814R1	
DIS8264	R4971	C-CARBON R	RN72K1J-181JE	1	435031814R1	
DIS8264	R4972	C-CARBON R	RN72K1J-181JE	1	435031814R1	
DIS8264	R4973	C-CARBON R	RN72K1J-181JE	1	435031814R1	
DIS8264	R4974	C-CARBON R	RN72K1J-101JE	1	435031014R1	
DIS8264	R4975	C-CARBON R	RN72K1J-101JE	1	435031014R1	
DIS8264	R4976	C-CARBON R	RN72K1J-105JE	1	435031054R1	
DIS8264	R4977	C-CARBON R	RN72K1J-684JE	1	435036844R1	
DIS8264	R4978	C-CARBON R	RN72K1J-103JE	1	435031034R1	
DIS8264	R4979	C-CARBON R	RN72K1J-103JE	1	435031034R1	
DIS8264	R4980	C-CARBON R	RN72K1J-103JE	1	435031034R1	
DIS8264	R4981	C-CARBON R	RN72K1J-103JE	1	435031034R1	
DIS8264	R4982	C-CARBON R	RN72K1J-105JE	1	435031054R1	
DIS8264	R4983	C-CARBON R	RN72K1J-684JE	1	435036844R1	
DIS8264-1E	R6781	C-CARBON R	RN72K1J-472JE	1	435034724R1	**<PP2P>**
DIS8264-1F	R6781	C-CARBON R	RN72K1J-472JE	1	435034724R1	**<WT3P> <GK3P> <GR6P>**
DIS8264-1E	R6782	C-CARBON R	RN72K1J-104JE	1	435031044R1	**<PP2P>**
DIS8264-1F	R6782	C-CARBON R	RN72K1J-104JE	1	435031044R1	**<WT3P> <GK3P> <GR6P>**
DIS8264-1E	R6783	C-CARBON R	RN72K1J-104JE	1	435031044R1	**<PP2P>**
DIS8264-1F	R6783	C-CARBON R	RN72K1J-104JE	1	435031044R1	**<WT3P> <GK3P> <GR6P>**
DIS8264-1E	R6784	C-CARBON R	RN72K1J-472JE	1	435034724R1	**<PP2P>**
DIS8264-1F	R6784	C-CARBON R	RN72K1J-472JE	1	435034724R1	**<WT3P> <GK3P> <GR6P>**
DIS8264-1E	R6785	C-CARBON R	RN72K1J-102JE	1	435031024R1	**<PP2P>**
DIS8264-1F	R6785	C-CARBON R	RN72K1J-102JE	1	435031024R1	**<WT3P> <GK3P> <GR6P>**
DIS8264-1E	R6786	C-CARBON R	RN72K1J-471JE	1	435034714R1	**<PP2P>**

DIS8264-1F	R6786	C-CARBON R	RN72K1J-471JE	1	435034714R1	**<WT3P> <GK3P> <GR6P>**
DIS8264-1E	R6788	C-CARBON R	RN72K1J-471JE	1	435034714R1	**<PP2P>**
DIS8264-1F	R6788	C-CARBON R	RN72K1J-471JE	1	435034714R1	**<WT3P> <GK3P> <GR6P>**
DIS8264-1E	R6790	C-CARBON R	RN72K1J-471JE	1	435034714R1	**<PP2P>**
DIS8264-1F	R6790	C-CARBON R	RN72K1J-471JE	1	435034714R1	**<WT3P> <GK3P> <GR6P>**
DIS8264-1E	R6792	C-CARBON R	RN72K1J-471JE	1	435034714R1	**<PP2P>**
DIS8264-1F	R6792	C-CARBON R	RN72K1J-471JE	1	435034714R1	**<WT3P> <GK3P> <GR6P>**
DIS8264-1E	R6794	C-CARBON R	RN72K1J-471JE	1	435034714R1	**<PP2P>**
DIS8264-1F	R6794	C-CARBON R	RN72K1J-471JE	1	435034714R1	**<WT3P> <GK3P> <GR6P>**
DIS8264-1E	R6796	C-CARBON R	RN72K1J-471JE	1	435034714R1	**<PP2P>**
DIS8264-1F	R6796	C-CARBON R	RN72K1J-471JE	1	435034714R1	**<WT3P> <GK3P> <GR6P>**
DIS8264-1E	R6901	C-CARBON R	RN72K1J-103JE	1	435031034R1	**<PP2P>**
DIS8264-1E	R6902	C-CARBON R	RN72K1J-103JE	1	435031034R1	**<PP2P>**
DIS8264-1E	R6903	C-CARBON R	RN72K1J-103JE	1	435031034R1	**<PP2P>**
DIS8264-1E	R6904	C-CARBON R	RN72K1J-102JE	1	435031024R1	**<PP2P>**
DIS8264-1E	R6905	C-CARBON R	RN72K1J-105JE	1	435031054R1	**<PP2P>**
DIS8264-1E	R6906	C-CARBON R	RN72K1J-105JE	1	435031054R1	**<PP2P>**
DIS8264-1E	R6907	C-CARBON R	RN72K1J-240FE	1	435032402R1	**<PP2P>**
DIS8264-1E	R6908	C-CARBON R	RN72K1J-270JE	1	435032704R1	**<PP2P>**
DIS8264-1E	R6909	C-CARBON R	RN72K1J-240FE	1	435032402R1	**<PP2P>**
DIS8264-1E	R6910	C-CARBON R	RN72K1J-270JE	1	435032704R1	**<PP2P>**
DIS8264-1E	R6911	C-CARBON R	RN72K1J-105JE	1	435031054R1	**<PP2P>**
DIS8264-1E	R6912	C-CARBON R	RN72K1J-105JE	1	435031054R1	**<PP2P>**
DIS8264-1E	R6913	C-CARBON R	RN72K1J-102JE	1	435031024R1	**<PP2P>**
DIS8264-1E	R6914	C-CARBON R	RN72K1J-102JE	1	435031024R1	**<PP2P>**
DIS8264-1E	R6915	C-CARBON R	RN72K1J-105JE	1	435031054R1	**<PP2P>**
DIS8264-1E	R6916	C-CARBON R	RN72K1J-240FE	1	435032402R1	**<PP2P>**
DIS8264-1E	R6917	C-CARBON R	RN72K1J-105JE	1	435031054R1	**<PP2P>**
DIS8264-1E	R6918	C-CARBON R	RN72K1J-270JE	1	435032704R1	**<PP2P>**
DIS8264-1E	R6919	C-CARBON R	RN72K1J-103JE	1	435031034R1	**<PP2P>**
DIS8264-1E	R6920	C-CARBON R	RN72K1J-103JE	1	435031034R1	**<PP2P>**
DIS8264-1E	R6921	C-CARBON R	RN72K1J-103JE	1	435031034R1	**<PP2P>**
DIS8264-1E	R6922	C-CARBON R	RN72K1J-102JE	1	435031024R1	**<PP2P>**
DIS8264-1E	R6923	C-CARBON R	RN72K1J-240FE	1	435032402R1	**<PP2P>**
DIS8264-1E	R6924	C-CARBON R	RN72K1J-105JE	1	435031054R1	**<PP2P>**
DIS8264-1E	R6925	C-CARBON R	RN72K1J-105JE	1	435031054R1	**<PP2P>**
DIS8264-1E	R6926	C-CARBON R	RN72K1J-270JE	1	435032704R1	**<PP2P>**
DIS8264-1E	R6927	C-CARBON R	RN72K1J-240FE	1	435032402R1	**<PP2P>**
DIS8264-1E	R6928	C-CARBON R	RN72K1J-270JE	1	435032704R1	**<PP2P>**

DIS8264-1E	R6929	C-CARBON R	RN72K1J-105JE	1	435031054R1	<**PP2P**>
DIS8264-1E	R6930	C-CARBON R	RN72K1J-105JE	1	435031054R1	<**PP2P**>
DIS8264-1E	R6931	C-CARBON R	RN72K1J-102JE	1	435031024R1	<**PP2P**>
DIS8264-1E	R6932	C-CARBON R	RN72K1J-102JE	1	435031024R1	<**PP2P**>
DIS8264-1E	R6933	C-CARBON R	RN72K1J-105JE	1	435031054R1	<**PP2P**>
DIS8264-1E	R6934	C-CARBON R	RN72K1J-240FE	1	435032402R1	<**PP2P**>
DIS8264-1E	R6935	C-CARBON R	RN72K1J-105JE	1	435031054R1	<**PP2P**>
DIS8264-1E	R6936	C-CARBON R	RN72K1J-270JE	1	435032704R1	<**PP2P**>
DIS8264-1E	R6937	C-CARBON R	RN72K1J-330JE	1	435033304R1	<**PP2P**>
DIS8264-1E	R6938	C-CARBON R	RN72K1J-150JE	1	435031504R1	<**PP2P**>
DIS8264-1E	R6939	C-CARBON R	RN72K1J-330JE	1	435033304R1	<**PP2P**>
DIS8264-1E	R6940	C-CARBON R	RN72K1J-150JE	1	435031504R1	<**PP2P**>
DIS8264-1E	R6941	C-CARBON R	RN72K1J-330JE	1	435033304R1	<**PP2P**>
DIS8264-1E	R6942	C-CARBON R	RN72K1J-150JE	1	435031504R1	<**PP2P**>
DIS8264-1E	R6943	C-CARBON R	RN72K1J-330JE	1	435033304R1	<**PP2P**>
DIS8264-1E	R6944	C-CARBON R	RN72K1J-150JE	1	435031504R1	<**PP2P**>
DIS8264-1E	R6945	C-CARBON R	RN72K1J-000JE	1	435030004R1	<**PP2P**>
DIS8264-1E	R6946	C-CARBON R	RN72K1J-000JE	1	435030004R1	<**PP2P**>
DIS8264-1E	R6947	C-CARBON R	RN72K1J-000JE	1	435030004R1	<**PP2P**>
DIS8264-1E	R6948	C-CARBON R	RN72K1J-000JE	1	435030004R1	<**PP2P**>
DIS8264-1E	R6950	C-CARBON R	RN72K1J-000JE	1	435030004R1	<**PP2P**>
DIS8264-1E	R6951	C-CARBON R	RN72K1J-102JE	1	435031024R1	<**PP2P**>
DIS8264-1E	R6953	C-CARBON R	RN72K1J-151JE	1	435031514R1	<**PP2P**>
DIS8264-1E	R6954	C-CARBON R	RN72K1J-151JE	1	435031514R1	<**PP2P**>
DIS8264-1E	R6955	C-CARBON R	RN72K1J-101JE	1	435031014R1	<**PP2P**>
DIS8264-1E	R6956	C-CARBON R	RN72K1J-223JE	1	435032234R1	<**PP2P**>
DIS8264-1E	R6957	C-CARBON R	RN72K1J-154JE	1	435031544R1	<**PP2P**>
DIS8264-1E	R6958	C-CARBON R	RN72K1J-682JE	1	435036824R1	<**PP2P**>
DIS8264-1E	R6959	C-CARBON R	RN72K1J-512JE	1	435035124R1	<**PP2P**>
DIS8264-1E	R6960	C-CARBON R	RN72K1J-103JE	1	435031034R1	<**PP2P**>
DIS8264-1E	R6961	C-CARBON R	RN72K1J-102JE	1	435031024R1	<**PP2P**>
DIS8264-1E	R6962	C-CARBON R	RN72K1J-000JE	1	435030004R1	<**PP2P**>
DIS8264-1E	R6963	C-CARBON R	RN72K1J-102JE	1	435031024R1	<**PP2P**>
DIS8264-1E	R6964	C-CARBON R	RN72K1J-102JE	1	435031024R1	<**PP2P**>
DIS8264-1E	R6965	C-CARBON R	RN72K1J-102JE	1	435031024R1	<**PP2P**>
DIS8264-1E	R6966	C-CARBON R	RN72K1J-102JE	1	435031024R1	<**PP2P**>
DIS8264-1E	R6967	C-CARBON R	RN72K1J-105JE	1	435031054R1	<**PP2P**>
DIS8264-1E	R6968	C-CARBON R	RN72K1J-105JE	1	435031054R1	<**PP2P**>
DIS8264-1E	R6969	C-CARBON R	RN72K1J-473JE	1	435034734R1	<**PP2P**>
DIS8264-1E	R6970	C-CARBON R	RN72K1J-473JE	1	435034734R1	<**PP2P**>
DIS8264-1E	R6971	C-CARBON R	RN72K1J-471JE	1	435034714R1	<**PP2P**>
DIS8264-1E	R6972	C-CARBON R	RN72K1J-471JE	1	435034714R1	<**PP2P**>
DIS8264-1E	R6973	C-CARBON R	RN72K1J-103JE	1	435031034R1	<**PP2P**>
DIS8264-1E	R6974	C-CARBON R	RN72K1J-103JE	1	435031034R1	<**PP2P**>
DIS8264-1E	R6975	C-CARBON R	RN72K1J-103JE	1	435031034R1	<**PP2P**>

DIS8264-1E	R6976	C-CARBON R	RN72K1J-473JE	1	435034734R1	**<PP2P>**
DIS8264-1E	R6977	C-CARBON R	RN72K1J-105JE	1	435031054R1	**<PP2P>**
DIS8264-1E	R6978	C-CARBON R	RN72K1J-105JE	1	435031054R1	**<PP2P>**
DIS8264-1E	R6979	C-CARBON R	RN72K1J-220JE	1	435032204R1	**<PP2P>**
DIS8264-1E	R6980	C-CARBON R	RN72K1J-220JE	1	435032204R1	**<PP2P>**
DIS8264-1E	R6981	C-CARBON R	RN72K1J-220JE	1	435032204R1	**<PP2P>**
DIS8264-1E	R6982	C-CARBON R	RN72K1J-220JE	1	435032204R1	**<PP2P>**
DIS8264-1E	R6997	C-CARBON R	RN72K1J-393JE	1	435033934R1	**<PP2P>**
DIS8264-1E	R6998	C-CARBON R	RN72K1J-473JE	1	435034734R1	**<PP2P>**
DIS8264-1E	R6999	C-CARBON R	RN72K1J-393JE	1	435033934R1	**<PP2P>**
DIS8264	R7501	C-CARBON R	RN72K1J-391JE	1	435033914R1	
DIS8264	R7502	C-CARBON R	RN72K1J-471JE	1	435034714R1	
DIS8264	R7503	C-CARBON R	RN72K1J-821JE	1	435038214R1	
DIS8264	R7504	C-CARBON R	RN72K1J-102JE	1	435031024R1	
DIS8264	R7505	C-CARBON R	RN72K1J-182JE	1	435031824R1	
DIS8264	R7506	C-CARBON R	RN72K1J-391JE	1	435033914R1	
DIS8264	R7507	C-CARBON R	RN72K1J-560JE	1	435035604R1	
DIS8264	R7508	C-CARBON R	RN72K1J-122JE	1	435031224R1	
DIS8264	R7509	C-CARBON R	RN72K1J-000JE	1	435030004R1	
DIS8264	R7510	C-CARBON R	RN72K1J-103JE	1	435031034R1	
DIS8264	R7511	C-CARBON R	RN72K1J-391JE	1	435033914R1	
DIS8264	R7512	C-CARBON R	RN72K1J-560JE	1	435035604R1	
DIS8264	R7513	C-CARBON R	RN72K1J-122JE	1	435031224R1	
DIS8264	R7514	C-CARBON R	RN72K1J-000JE	1	435030004R1	
DIS8264	R7515	C-CARBON R	RN72K1J-103JE	1	435031034R1	
DIS8264	R7516	C-CARBON R	RN72K1J-391JE	1	435033914R1	
DIS8264	R7517	C-CARBON R	RN72K1J-122JE	1	435031224R1	
DIS8264	R7518	C-CARBON R	RN72K1J-560JE	1	435035604R1	
DIS8264	R7519	C-CARBON R	RN72K1J-000JE	1	435030004R1	
DIS8264	R7520	C-CARBON R	RN72K1J-103JE	1	435031034R1	
DIS8264	R7521	C-CARBON R	RN72K1J-272JE	1	435032724R1	
DIS8264	R7522	C-CARBON R	RN72K1J-272JE	1	435032724R1	
DIS8264	R7523	C-CARBON R	RN72K1J-272JE	1	435032724R1	
DIS8264	R7524	C-CARBON R	RN72K1J-272JE	1	435032724R1	
DIS8264	R7525	C-CARBON R	RN72K1J-472JE	1	435034724R1	
DIS8264	R7526	C-CARBON R	RN72K1J-472JE	1	435034724R1	
DIS8264	R7527	C-CARBON R	RN72K1J-472JE	1	435034724R1	
DIS8264	R7528	C-CARBON R	RN72K1J-153JE	1	435031534R1	
DIS8264	R7529	C-CARBON R	RN72K1J-471JE	1	435034714R1	
DIS8264	R7530	C-CARBON R	RN72K1J-471JE	1	435034714R1	
DIS8264	R7531	C-CARBON R	RN72K1J-223JE	1	435032234R1	
DIS8264	R7532	C-CARBON R	RN72K1J-103JE	1	435031034R1	
DIS8264	R7533	C-CARBON R	RN72K1J-220JE	1	435032204R1	
DIS8264	R7534	C-CARBON R	RN72K1J-220JE	1	435032204R1	
DIS8264	R7535	C-CARBON R	RN72K1J-220JE	1	435032204R1	

DIS8264	R7536	C-CARBON R	RN72K1J-220JE	1	435032204R1	
DIS8264	R7537	C-CARBON R	RN72K1J-220JE	1	435032204R1	
DIS8264	R7538	C-CARBON R	RN72K1J-000JE	1	435030004R1	
DIS8264	R7540	C-CARBON R	RN72K1J-391JE	1	435033914R1	
DIS8264	R7541	C-CARBON R	RN72K1J-560JE	1	435035604R1	
DIS8264	R7542	C-CARBON R	RN72K1J-122JE	1	435031224R1	
DIS8264	R7544	C-CARBON R	RN72K1J-103JE	1	435031034R1	
DIS8264	R7545	C-CARBON R	RN72K1J-391JE	1	435033914R1	
DIS8264-1E	R7546	C-CARBON R	RN72K1J-471JE	1	435034714R1	**<PP2P>**
DIS8264-1F	R7546	C-CARBON R	RN72K1J-471JE	1	435034714R1	**<WT3P> <GK3P> <GR6P>**
DIS8264-1E	R7547	C-CARBON R	RN72K1J-391JE	1	435033914R1	**<PP2P>**
DIS8264-1F	R7547	C-CARBON R	RN72K1J-391JE	1	435033914R1	**<WT3P> <GK3P> <GR6P>**
DIS8264-1E	R7548	C-CARBON R	RN72K1J-560JE	1	435035604R1	**<PP2P>**
DIS8264-1F	R7548	C-CARBON R	RN72K1J-560JE	1	435035604R1	**<WT3P> <GK3P> <GR6P>**
DIS8264-1E	R7549	C-CARBON R	RN72K1J-122JE	1	435031224R1	**<PP2P>**
DIS8264-1F	R7549	C-CARBON R	RN72K1J-122JE	1	435031224R1	**<WT3P> <GK3P> <GR6P>**
DIS8264-1E	R7551	C-CARBON R	RN72K1J-103JE	1	435031034R1	**<PP2P>**
DIS8264-1F	R7551	C-CARBON R	RN72K1J-103JE	1	435031034R1	**<WT3P> <GK3P> <GR6P>**
DIS8264-1E	R7553	C-CARBON R	RN72K1J-103JE	1	435031034R1	**<PP2P>**
DIS8264-1F	R7553	C-CARBON R	RN72K1J-103JE	1	435031034R1	**<WT3P> <GK3P> <GR6P>**
DIS8264-1E	R7554	C-CARBON R	RN72K1J-000JE	1	435030004R1	**<PP2P>**
DIS8264-1F	R7554	C-CARBON R	RN72K1J-000JE	1	435030004R1	**<WT3P> <GK3P> <GR6P>**
DIS8264-1E	R7555	C-CARBON R	RN72K1J-391JE	1	435033914R1	**<PP2P>**
DIS8264-1F	R7555	C-CARBON R	RN72K1J-391JE	1	435033914R1	**<WT3P> <GK3P> <GR6P>**
DIS8264-1E	R7556	C-CARBON R	RN72K1J-560JE	1	435035604R1	**<PP2P>**
DIS8264-1F	R7556	C-CARBON R	RN72K1J-560JE	1	435035604R1	**<WT3P> <GK3P> <GR6P>**
DIS8264-1E	R7557	C-CARBON R	RN72K1J-122JE	1	435031224R1	**<PP2P>**
DIS8264-1F	R7557	C-CARBON R	RN72K1J-122JE	1	435031224R1	**<WT3P> <GK3P> <GR6P>**
DIS8264-1E	R7558	C-CARBON R	RN72K1J-000JE	1	435030004R1	**<PP2P>**
DIS8264-1F	R7558	C-CARBON R	RN72K1J-000JE	1	435030004R1	**<WT3P> <GK3P> <GR6P>**
DIS8264	R7565	C-CARBON R	RN72K1J-104JE	1	435031044R1	
DIS8264	R7566	C-CARBON R	RN72K1J-104JE	1	435031044R1	
DIS8264	R7567	C-CARBON R	RN72K1J-104JE	1	435031044R1	
DIS8264	R7568	C-CARBON R	RN72K1J-104JE	1	435031044R1	

DIS8264-1D	R7705	C-CARBON R	RN72K1J-561JE	1	435035614R1	**<DC1N>**
DIS8264-1E	R7705	C-CARBON R	RN72K1J-561JE	1	435035614R1	**<PP2P>**
DIS8264-1F	R7705	C-CARBON R	RN72K1J-561JE	1	435035614R1	**<WT3P> <GK3P> <GR6P>**
DIS8264	S7501	PUSH SW	NPS-111-S681	1	25035718	
DIS8264	S7502	PUSH SW	NPS-111-S681	1	25035718	
DIS8264	S7503	PUSH SW	NPS-111-S681	1	25035718	
DIS8264	S7504	PUSH SW	NPS-111-S681	1	25035718	
DIS8264	S7505	PUSH SW	NPS-111-S681	1	25035718	
DIS8264	S7506	PUSH SW	NPS-111-S681	1	25035718	
DIS8264	S7701	PUSH SW	NPS-111-S681	1	25035718	
DIS8264	S7703	PUSH SW	NPS-111-S681	1	25035718	
DIS8264-1E	S7705	PUSH SW	NPS-111-S681	1	25035718	<PP2P>
DIS8264-1F	S7705	PUSH SW	NPS-111-S681	1	25035718	<WT3P> <GK3P> <GR6P>
DIS8264	U7501	REMO SENS	PIC-37043TH2	1	241336	
DIS8264	X7501	CERA LOCK	CST5.00MGW	1	3010242	

PRINTED CIRCUIT BOARD PARTS LIST

DV-SP1000

U12: POWER SUPPLY PC BOARD-1 NAPS-8269
U13: POWER SUPPLY PC BOARD-2 NAPS-8270
U14: POWER SWITCH PC BOARD NASW-7271

PWB NO.	CIRCUIT NO.	PART NAME	DESCRIPTION		PART NO.	REMARKS
PS8269	C9001	IS C	DE1310E472M-KH	1	3300054	
PS8269	C9002	IS C	DE1310E472M-KH	1	3300054	
PS8269-1B	C9003	IS C	RE275V-103M	1	3500196S	**<PP2P>**
PS8269-1C	C9003	IS C	RE275V-103M	1	3500196S	**<WT3P>**
PS8269-1I	C9003	IS C	RE275V-103M	1	3500196S	**<GK3P> <GR6P>**
PS8269	C9101	TF C	ECQ-V50V-334J	1	374723344	
PS8269	C9102	TF C	ECQ-V50V-334J	1	374723344	
PS8269	C9103	TF C	ECQ-V50V-334J	1	374723344	
PS8269	C9104	TF C	ECQ-V50V-334J	1	374723344	
PS8269	C9105	TF C	ECQ-V50V-334J	1	374723344	
PS8269	C9106	TF C	ECQ-V50V-334J	1	374723344	
PS8269	C9107	TF C	ECQ-V50V-334J	1	374723344	
PS8269	C9108	ELECT C	CE69W35V-3300M	1	3504317	

PS8269	C9109	VX C	CE04W16V-2200M(VX)	1	393342227S
PS8269	C9110	VX C	CE04W16V-2200M(VX)	1	393342227S
PS8269	C9111	ELECT C	CE69W25V-2200M	1	3504369
PS8269	C9112	ELECT C	CE69W25V-2200M	1	3504369
PS8269	C9113	ELECT C	CE69W25V-2200M	1	3504369
PS8269	C9114	VX C	CE04W50V-4.7M(VX)	1	393380477
PS8269	C9115	VX C	CE04W6.3V-47M(VX)	1	393324707
PS8269	C9116	C-CERA C	CK725F1H-104Z1	1	332151040R1
PS8269	C9117	VX C	CE04W35V-47M(VX)	1	393364707
PS8269	C9118	VX C	CE04W35V-47M(VX)	1	393364707
PS8269	C9119	C-CERA C	CK725F1H-104Z1	1	332151040R1
PS8269	C9120	C-CERA C	CK725F1H-104Z1	1	332151040R1
PS8269	C9121	C-CERA C	CK725F1H-104Z1	1	332151040R1
PS8269	C9122	VX C	CE04W6.3V-470M(VX)	1	393324717
PS8269	C9123	VX C	CE04W6.3V-470M(VX)	1	393324717
PS8269	C9124	C-CERA C	CK725F1H-104Z1	1	332151040R1
PS8269	C9125	C-CERA C	CK725F1H-104Z1	1	332151040R1
PS8269	C9126	C-CERA C	CK725F1H-104Z1	1	332151040R1
PS8269	C9127	VX C	CE04W6.3V-470M(VX)	1	393324717
PS8269	C9128	C-CERA C	CK725F1H-104Z1	1	332151040R1
PS8269	C9129	VX C	CE04W35V-47M(VX)	1	393364707
PS8269	C9601	VX C	CE04W16V-470M(VX)	1	393344717
PS8269	C9602	C-CERA C	CK725F1H-104Z1	1	332151040R1
PS8269	C9603	VX C	CE04W16V-470M(VX)	1	393344717
PS8269	D9101	C-DIODE	1SS352	1	223234R2
PS8269	D9102	DIODE	RBV602	1	22380038F
PS8269	D9103	C-DIODE	1SS352	1	223234R2
PS8269	D9104	C-DIODE	1SR154-400	1	22380284R2
PS8269	D9105	C-DIODE	1SR154-400	1	22380284R2
PS8269	D9106	C-DIODE	1SR154-400	1	22380284R2
PS8269	D9107	C-DIODE	1SR154-400	1	22380284R2
PS8269	D9108	C-DIODE	1SR154-400	1	22380284R2
PS8269	D9109	C-DIODE	1SR154-400	1	22380284R2

PS8269	D9110	C-DIODE	1SR154-400	1	22380284R2		
PS8269	D9111	C-DIODE	1SR154-400	1	22380284R2		
PS8269	D9112	C-DIODE	1SR154-400	1	22380284R2		
PS8269	D9113	C-DIODE	1SR154-400	1	22380284R2		
PS8269	D9114	C-DIODE	1SR154-400	1	22380284R2		
PS8269	D9115	C-DIODE	1SR154-400	1	22380284R2		
PS8269	D9116	C-DIODE	1SR154-400	1	22380284R2		
PS8269	D9121	C-DIODE	1SS352	1	223234R2		
PS8269	D9122	C-DIODE	1SS352	1	223234R2		
PS8269	D9123	DIODE	RK16	1	22380320		
PS8269	D9124	DIODE	RK16	1	22380320		
PS8269	D9125	DIODE	RK46	1	22380296F		
PS8269	D9126	DIODE	RK46	1	22380296F		
PS8269	D9601	C-DIODE	RB051L-40	1	223265R2		
PS8269	D9602	C-DIODE	RB051L-40	1	223265R2		
PS8269	D9603	C-DIODE	RB051L-40	1	223265R2		
PS8269	D9604	C-DIODE	RB051L-40	1	223265R2		
PS8269	D9605	ZENER D	UDZS5.1B	1	224550510R2		
PS8269	D9606	C-DIODE	1SS352	1	223234R2		
PS8269	E9001	CLAMP	WS-2NS	1	27300833		
PS8269	E9601	TRM	NTM-1P243(M1699)	1	25060312		
PS8269	E9602	TRM	NTM-1P243(M1699)	1	25060312		
PS8269	E9603	TRM	NTM-1P243(M1699)	1	25060312		
PS8269	E9604	TRM	NTM-1P243(M1699)	1	25060312		
PS8269-1G	E9801	FUSE LABEL	2.5A125V	1	29363738	N	**<DC1N>**
PS8269-1B	E9801	LABEL	T2.5AL250V	1	29361747		**<PP2P>**
PS8269-1C	E9801	LABEL	T2.5AL250V	1	29361747		**<WT3P>**
PS8269-1I	E9801	LABEL	T2.5AL250V	1	29361747		**<GK3P> <GR6P>**
PS8269	F9001A	FUSE HOL	NSCT-1P2031	1	25052133		
PS8269	F9001B	FUSE HOL	NSCT-1P2031	1	25052133		
PS8269	L9001	CHOKE COIL	NCH-3561	1	231280		
PS8269	L9101	CHOKE COIL	NCH-3582K101	1	231303K101		
PS8269	L9102	CHOKE COIL	NCH-3582K101	1	231303K101		

PS8269	L9103	CHOKE COIL	NCH-3582K101	1	231303K101		
PS8269	P9001A	AC INLET	NPLG-2P913	1	25055960		
PS8269-1B	P9003	CRIMP AS	CRIMP AS	1	2069943354UL		**<PP2P>**
PS8269-1C	P9003	CRIMP AS	CRIMP AS	1	2069943354UL		**<WT3P>**
PS8269-1I	P9003	CRIMP AS	CRIMP AS	1	2069943354UL		**<GK3P> <GR6P>**
PS8269-1B	P9004	CRIMP AS	CRIMP AS	1	2069943359UL		**<PP2P>**
PS8269-1C	P9004	CRIMP AS	CRIMP AS	1	2069943359UL		**<WT3P>**
PS8269-1I	P9004	CRIMP AS	CRIMP AS	1	2069943359UL		**<GK3P> <GR6P>**
PS8269	P9005A	PLUG	NPLG-2P632	1	25055676		
PS8269-1C	P9006A	PLUG	NPLG-2P632	1	25055676		**<WT3P>**
PS8269	P9007A	PLUG	NPLG-3P150	1	25055166		
PS8269	P9008A	PLUG	NPLG-7P154	1	25055170		
PS8269	P9102A	PLUG	NPLG-8P136	1	25055152		
PS8269	P9103A	PLUG	NPLG-4P132	1	25055148		
PS8269	P9104A	PLUG	NPLG-11P139	1	25055155		
PS8269	P9104B	PLUG	NPLG-11P358	1	25055375		
PS8269	P9105	CRIMP AS	CRIMP AS	1	2069943106UL		
PS8269	P9503	SOCKET AS	NSAS-4P0994	1	2009990712AUL		
PS8269	P9601A	PLUG	NPLG-12P140	1	25055156		
PS8269	P9602A	PLUG	NPLG-14P142	1	25055158		
PS8269	P9604A	PLUG	NPLG-15P143	1	25055159		
PS8269	Q9101	IC(REGULATOR)	MPC29M05HF	1	22278005ENE		
PS8269	Q9102	IC	SI-8015JF	1	22242082	N	
PS8269	Q9102A	RADIATOR	RAD51(B)	1	27160220-1		
PS8269	Q9102B	SCREW	3P+6FN(BC)	1	82143006		
PS8269	Q9103	IC	SI-8050JF	1	22242083	N	
PS8269	Q9103A	RADIATOR	RAD51(B)	1	27160220-1		
PS8269	Q9103B	SCREW	3P+6FN(BC)	1	82143006		
PS8269	Q9104	IC	SI-8033S	1	22242084	N	
PS8269	Q9104A	RADIATOR	RAD51(B)	1	27160220-1		
PS8269	Q9104B	SCREW	3P+6FN(BC)	1	82143006		
PS8269	Q9601	TR	RN1407	1	2216260R2		
PS8269	Q9602	TR	RN2403	1	2214540R2		

PS8269	Q9603	TR	RN1407	1	2216260R2	
PS8269	Q9604	TR	2SC2120-Y	1	2211164	
PS8269	R9101	METAL R	RNU1/2WCJ-0.22	1	453532294	
PS8269	R9102	METAL R	RNU1/2WCJ-0.22	1	453532294	
PS8269	R9103	METAL R	RNU1/2WCJ-0.22	1	453532294	
PS8269	R9104	METAL R	RNU1/2WCJ-1	1	453530104	
PS8269	R9105	METAL R	RNU1/2WCJ-0.22	1	453532294	
PS8269	R9106	METAL R	RNU1/2WCJ-0.22	1	453532294	
PS8269	R9107	METAL R	RNU1/2WCJ-0.22	1	453532294	
PS8269	R9108	C-CARBON R	RN72K1J-103JE	1	435031034R1	
PS8269	R9109	METAL R	RNU1/2WCJ-0.22	1	453532294	
PS8269	R9110	METAL R	RNU1/2WCJ-0.22	1	453532294	
PS8269	R9111	METAL R	RNU1/2WCJ-0.22	1	453532294	
PS8269	R9112	METAL R	RNU1/2WCJ-0.22	1	453532294	
PS8269	R9113	METAL R	RNU1/2WCJ-0.22	1	453532294	
PS8269	R9114	METAL R	RNU1/2WCJ-1	1	453530104	
PS8269	R9115	C-CARBON R	RN72K1J-223JE	1	435032234R1	
PS8269	R9116	C-CARBON R	RN72K1J-182JE	1	435031824R1	
PS8269	R9117	C-CARBON R	RN72K1J-681JE	1	435036814R1	
PS8269	R9120	C-CARBON R	RN72K1J-000JE	1	435030004R1	
PS8269	R9121	C-CARBON R	RN72K1J-000JE	1	435030004R1	
PS8269	R9601	C-CARBON R	RN72K1J-101JE	1	435031014R1	
PS8269	R9602	C-CARBON R	RN72K1J-102JE	1	435031024R1	
PS8269	R9603	C-CARBON R	RN72K1J-472JE	1	435034724R1	
PS8269	R9604	METAL O R	RS1/2WBJ-100	1	443521014	
PS8269	R9605	METAL O R	RS1/2WBJ-100	1	443521014	
PS8269	R9606	C-CARBON R	RN72K1J-151JE	1	435031514R1	
PS8269	R9607	C-CARBON R	RN72K1J-332JE	1	435033324R1	
PS8269	R9608	C-CARBON R	RN72K1J-000JE	1	435030004R1	
PS8269-1B	S9001	P SW	NPS-111-L512P	1	25035550	**<PP2P>**
PS8269-1C	S9001	P SW	NPS-111-L512P	1	25035550	**<WT3P>**
PS8269-1I	S9001	P SW	NPS-111-L512P	1	25035550	**<GK3P> <GR6P>**
PS8269-1C	S9002	SLIDE SW	NSS-22157P	1	25065437	**<WT3P>**

PRINTED CIRCUIT BOARD PARTS LIST

DV-SP1000

U15: DIGITAL VIDEO PROCESSOR PC BOARD NADG-7272

PWB NO.	CIRCUIT NO.	PART NAME	DESCRIPTION		PART NO.	REMARKS
DG8272-1C	C5001	C-CERA C	CK725B1E-473K1	1	332114735R1	Except <**DC1N**>
DG8272-1C	C5002	C-CERA C	CK725B1E-473K1	1	332114735R1	Except <**DC1N**>
DG8272-1C	C5003	C-CERA C	CK725B1E-473K1	1	332114735R1	Except <**DC1N**>
DG8272-1C	C5004	C-CERA C	CK725B1E-473K1	1	332114735R1	Except <**DC1N**>
DG8272-1C	C5005	CHIP ELECT C	CEWX6.3V-100M	1	356721019R2	Except <**DC1N**>
DG8272-1C	C5006	C-CERA C	CK725F1A-105Z1	1	332181050R1	Except <**DC1N**>
DG8272-1C	C5007	C-CERA C	CK725F1A-105Z1	1	332181050R1	Except <**DC1N**>
DG8272-1C	C5008	C-CERA C	CK725F1A-105Z1	1	332181050R1	Except <**DC1N**>
DG8272-1C	C5009	C-CERA C	CK725F1A-105Z1	1	332181050R1	Except <**DC1N**>
DG8272-1C	C5010	C-CERA C	CK725F1A-105Z1	1	332181050R1	Except <**DC1N**>
DG8272-1C	C5011	C-CERA C	CK725F1A-105Z1	1	332181050R1	Except <**DC1N**>
DG8272-1C	C5012	C-CERA C	CK725F1A-105Z1	1	332181050R1	Except <**DC1N**>
DG8272-1C	C5013	C-CERA C	CK725F1A-105Z1	1	332181050R1	Except <**DC1N**>
DG8272-1C	C5015	C-CERA C	CK725F1A-105Z1	1	332181050R1	Except <**DC1N**>
DG8272-1C	C5016	C-CERA C	CK725F1A-105Z1	1	332181050R1	Except <**DC1N**>
DG8272-1C	C5017	C-CERA C	CK725F1A-105Z1	1	332181050R1	Except <**DC1N**>
DG8272-1C	C5018	C-CERA C	CK725F1A-105Z1	1	332181050R1	Except <**DC1N**>
DG8272-1C	C5019	C-CERA C	CK725F1A-105Z1	1	332181050R1	Except <**DC1N**>
DG8272-1C	C5020	C-CERA C	CK725F1A-105Z1	1	332181050R1	Except <**DC1N**>
DG8272-1C	C5021	C-CERA C	CK725F1A-105Z1	1	332181050R1	Except <**DC1N**>
DG8272-1C	C5022	C-CERA C	CK725F1A-105Z1	1	332181050R1	Except <**DC1N**>
DG8272-1C	C5023	C-CERA C	CK725F1A-105Z1	1	332181050R1	Except <**DC1N**>
DG8272-1C	C5024	C-CERA C	CK725F1A-105Z1	1	332181050R1	Except <**DC1N**>
DG8272-1C	C5025	C-CERA C	CK725F1A-105Z1	1	332181050R1	Except <**DC1N**>
DG8272-1C	C5026	C-CERA C	CK725F1A-105Z1	1	332181050R1	Except <**DC1N**>
DG8272-1C	C5027	C-CERA C	CK725F1A-105Z1	1	332181050R1	Except <**DC1N**>
DG8272-1C	C5028	C-CERA C	CC725CH1H-180J1	1	342101804R1	Except <**DC1N**>
DG8272-1C	C5029	C-CERA C	CC725CH1H-150J1	1	342101504R1	Except <**DC1N**>

DG8272-1C	C5030	C-CERA C	CK725F1A-105Z1	1	332181050R1	Except **<DC1N>**
DG8272-1C	C5031	C-CERA C	CK725F1A-105Z1	1	332181050R1	Except **<DC1N>**
DG8272-1C	C5033	CHIP ELECT C	CEWX6.3V-100M	1	356721019R2	Except **<DC1N>**
DG8272-1C	C5034	CHIP ELECT C	CEWX6.3V-100M	1	356721019R2	Except **<DC1N>**
DG8272-1C	C5035	C-CERA C	CK725F1A-105Z1	1	332181050R1	Except **<DC1N>**
DG8272-1C	C5037	CHIP ELECT C	CEWX6.3V-100M	1	356721019R2	Except **<DC1N>**
DG8272-1C	C5038	C-CERA C	CK725F1A-105Z1	1	332181050R1	Except **<DC1N>**
DG8272-1C	C5039	C-CERA C	CK725F1A-105Z1	1	332181050R1	Except **<DC1N>**
DG8272-1C	C5040	C-CERA C	CK725F1A-105Z1	1	332181050R1	Except **<DC1N>**
DG8272-1C	C5041	C-CERA C	CK725F1A-105Z1	1	332181050R1	Except **<DC1N>**
DG8272-1C	C5042	C-CERA C	CK725F1A-105Z1	1	332181050R1	Except **<DC1N>**
DG8272-1C	C5043	C-CERA C	CC725CH1H-102J1	1	342101024R1	Except **<DC1N>**
DG8272-1C	C5044	CHIP ELECT C	CEWX6.3V-100M	1	356721019R2	Except **<DC1N>**
DG8272-1C	C5045	CHIP ELECT C	CEWX6.3V-100M	1	356721019R2	Except **<DC1N>**
DG8272-1C	C5046	CHIP ELECT C	CEWX6.3V-100M	1	356721019R2	Except **<DC1N>**
DG8272-1C	C5101	C-CERA C	CK725F1H-473Z1	1	332154730R1	Except **<DC1N>**
DG8272-1C	C5201	C-CERA C	CK725F1H-473Z1	1	332154730R1	Except **<DC1N>**
DG8272-1C	C5251	C-CERA C	CK725F1H-473Z1	1	332154730R1	Except **<DC1N>**
DG8272-1C	C5503	C-CERA C	CK725B1E-473K1	1	332114735R1	Except **<DC1N>**
DG8272-1C	C5504	C-CERA C	CK725B1E-473K1	1	332114735R1	Except **<DC1N>**
DG8272-1C	C5603	C-CERA C	CK725B1E-473K1	1	332114735R1	Except **<DC1N>**
DG8272-1C	C5703	C-CERA C	CK725B1E-473K1	1	332114735R1	Except **<DC1N>**
DG8272	C8001	C-CERA C	CK725F1A-105Z1	1	332181050R1	
DG8272	C8002	C-CERA C	CK725F1A-105Z1	1	332181050R1	
DG8272	C8003	C-CERA C	CK725F1A-105Z1	1	332181050R1	
DG8272	C8004	C-CERA C	CK725F1A-105Z1	1	332181050R1	
DG8272	C8006	C-CERA C	CK725F1A-105Z1	1	332181050R1	
DG8272	C8010	C-CERA C	CK725F1A-105Z1	1	332181050R1	
DG8272	C8011	C-CERA C	CK725F1A-105Z1	1	332181050R1	
DG8272	C8012	C-CERA C	CK725F1A-105Z1	1	332181050R1	
DG8272	C8013	C-CERA C	CK725F1A-105Z1	1	332181050R1	
DG8272	C8014	C-CERA C	CK725F1A-105Z1	1	332181050R1	
DG8272	C8019	C-CERA C	CK725F1A-105Z1	1	332181050R1	

DG8272	C8020	C-CERA C	CK725F1A-105Z1	1	332181050R1
DG8272	C8021	C-CERA C	CK725F1A-105Z1	1	332181050R1
DG8272	C8022	C-CERA C	CK725F1A-105Z1	1	332181050R1
DG8272	C8023	C-CERA C	CK725F1A-105Z1	1	332181050R1
DG8272	C8024	C-CERA C	CK725F1A-105Z1	1	332181050R1
DG8272	C8025	C-CERA C	CK725F1A-105Z1	1	332181050R1
DG8272	C8026	C-CERA C	CK725F1A-105Z1	1	332181050R1
DG8272	C8027	C-CERA C	CK725F1A-105Z1	1	332181050R1
DG8272	C8028	C-CERA C	CK725F1A-105Z1	1	332181050R1
DG8272	C8029	C-CERA C	CK725F1A-105Z1	1	332181050R1
DG8272	C8030	C-CERA C	CC725CH1E-102J1	1	342111024R1
DG8272	C8031	C-CERA C	CK725F1A-105Z1	1	332181050R1
DG8272	C8032	CHIP ELECT C	CEWX16V-22M	1	356742209R2
DG8272	C8033	C-CERA C	CK725F1A-105Z1	1	332181050R1
DG8272	C8034	C-CERA C	CC725CH1H-101J1	1	342101014R1
DG8272	C8035	C-CERA C	CC725CH1E-102J1	1	342111024R1
DG8272	C8036	C-CERA C	CC725CH1H-050C1	1	342100501R1
DG8272	C8038	C-CERA C	CC725CH1H-050C1	1	342100501R1
DG8272	C8040	C-CERA C	CK725F1A-105Z1	1	332181050R1
DG8272	C8041	CHIP ELECT C	CEWX4V-220M	1	3567A2219R2
DG8272	C8042	CHIP ELECT C	CEWX4V-220M	1	3567A2219R2
DG8272	C8043	CHIP ELECT C	CEWX16V-10M	1	356741009R2
DG8272	C8044	CHIP ELECT C	CEWX4V-220M	1	3567A2219R2
DG8272	C8045	C-CERA C	CK725F1A-105Z1	1	332181050R1
DG8272	C8047	C-CERA C	CK725F1A-105Z1	1	332181050R1
DG8272	C8048	C-CERA C	CK725F1A-105Z1	1	332181050R1
DG8272	C8049	C-CERA C	CK725F1A-105Z1	1	332181050R1
DG8272	C8050	C-CERA C	CK725F1A-105Z1	1	332181050R1
DG8272	C8052	C-CERA C	CK725F1A-105Z1	1	332181050R1
DG8272	C8053	C-CERA C	CK725F1A-105Z1	1	332181050R1
DG8272	C8054	C-CERA C	CK725F1A-105Z1	1	332181050R1
DG8272	C8055	C-CERA C	CK725F1A-105Z1	1	332181050R1
DG8272	C8056	C-CERA C	CK725F1A-105Z1	1	332181050R1

DG8272	C8057	CHIP ELECT C	CEWX16V-22M	1	356742209R2	
DG8272	C8058	C-CERA C	CK725F1A-105Z1	1	332181050R1	
DG8272	C8059	C-CERA C	CC725CH1H-100D1	1	342101002R1	
DG8272	C8060	C-CERA C	CC725CH1H-100D1	1	342101002R1	
DG8272	C8061	C-CERA C	CK725F1A-105Z1	1	332181050R1	
DG8272	C8062	C-CERA C	CK725F1A-105Z1	1	332181050R1	
DG8272	C8063	C-CERA C	CK725F1A-105Z1	1	332181050R1	
DG8272	C8064	C-CERA C	CK725F1A-105Z1	1	332181050R1	
DG8272	C8067	CHIP ELECT C	CEWX16V-22M	1	356742209R2	
DG8272	C8068	C-CERA C	CK725F1A-105Z1	1	332181050R1	
DG8272	C8069	C-CERA C	CK725F1A-105Z1	1	332181050R1	
DG8272	C8070	C-CERA C	CK725F1A-105Z1	1	332181050R1	
DG8272	C8071	C-CERA C	CK725F1A-105Z1	1	332181050R1	
DG8272-1C	C8072	C-CERA C	CK725F1A-105Z1	1	332181050R1	Except **<DC1N>**
DG8272-1C	C8073	C-CERA C	CK725F1A-105Z1	1	332181050R1	Except **<DC1N>**
DG8272-1C	C8074	C-CERA C	CK725F1A-105Z1	1	332181050R1	Except **<DC1N>**
DG8272-1C	C8075	C-CERA C	CK725F1A-105Z1	1	332181050R1	Except **<DC1N>**
DG8272	C8076	C-CERA C	CK725F1A-105Z1	1	332181050R1	
DG8272	C8078	CHIP ELECT C	CEWX16V-22M	1	356742209R2	
DG8272	C8079	CHIP ELECT C	CEWX16V-10M	1	356741009R2	
DG8272	C8080	C-CERA C	CK725F1A-105Z1	1	332181050R1	
DG8272	C8101	C-CERA C	CK725F1A-105Z1	1	332181050R1	
DG8272	C8102	CHIP ELECT C	CEWX4V-220M	1	3567A2219R2	
DG8272	C8103	C-CERA C	CK725F1A-105Z1	1	332181050R1	
DG8272	C8104	C-CERA C	CK725F1A-105Z1	1	332181050R1	
DG8272	C8105	C-CERA C	CK725F1A-105Z1	1	332181050R1	
DG8272	C8106	C-CERA C	CK725F1A-105Z1	1	332181050R1	
DG8272	C8108	C-CERA C	CK725F1A-105Z1	1	332181050R1	
DG8272	C8108	C-CERA C	CK725F1A-105Z1	1	332181050R1	
DG8272	C8109	C-CERA C	CK725F1A-105Z1	1	332181050R1	
DG8272	C8110	C-CERA C	CK725F1A-105Z1	1	332181050R1	
DG8272	C8111	C-CERA C	CK725F1A-105Z1	1	332181050R1	
DG8272	C8112	C-CERA C	CK725F1A-105Z1	1	332181050R1	

DG8272	C8113	C-CERA C	CK725F1A-105Z1	1	332181050R1
DG8272	C8115	C-CERA C	CK725F1A-105Z1	1	332181050R1
DG8272	C8116	C-CERA C	CK725F1A-105Z1	1	332181050R1
DG8272	C8118	C-CERA C	CK725F1A-105Z1	1	332181050R1
DG8272	C8119	C-CERA C	CK725F1A-105Z1	1	332181050R1
DG8272	C8120	C-CERA C	CK725F1A-105Z1	1	332181050R1
DG8272	C8121	C-CERA C	CK725F1A-105Z1	1	332181050R1
DG8272	C8122	C-CERA C	CK725F1A-105Z1	1	332181050R1
DG8272	C8123	C-CERA C	CK725F1A-105Z1	1	332181050R1
DG8272	C8124	C-CERA C	CK725F1A-105Z1	1	332181050R1
DG8272	C8125	C-CERA C	CK725F1A-105Z1	1	332181050R1
DG8272	C8126	C-CERA C	CK725F1A-105Z1	1	332181050R1
DG8272	C8127	CHIP ELECT C	CEWX4V-220M	1	3567A2219R2
DG8272	C8128	C-CERA C	CK725F1A-105Z1	1	332181050R1
DG8272	C8129	C-CERA C	CK725F1A-105Z1	1	332181050R1
DG8272	C8130	C-CERA C	CK725F1A-105Z1	1	332181050R1
DG8272	C8131	C-CERA C	CK725F1A-105Z1	1	332181050R1
DG8272	C8132	C-CERA C	CK725F1A-105Z1	1	332181050R1
DG8272	C8133	C-CERA C	CK725F1A-105Z1	1	332181050R1
DG8272	C8134	C-CERA C	CK725F1A-105Z1	1	332181050R1
DG8272	C8135	CHIP ELECT C	CEWX4V-220M	1	3567A2219R2
DG8272	C8136	C-CERA C	CK725F1A-105Z1	1	332181050R1
DG8272	C8137	C-CERA C	CK725F1A-105Z1	1	332181050R1
DG8272	C8138	C-CERA C	CK725F1A-105Z1	1	332181050R1
DG8272	C8139	C-CERA C	CC725CH1E-102J1	1	342111024R1
DG8272	C8140	C-CERA C	CC725CH1H-220J1	1	342102204R1
DG8272	C8141	C-CERA C	CK725F1A-105Z1	1	332181050R1
DG8272	C8142	CHIP ELECT C	CEWX4V-220M	1	3567A2219R2
DG8272	C8201	CHIP ELECT C	CEWX16V-22M	1	356742209R2
DG8272	C8202	C-CERA C	CK725F1A-105Z1	1	332181050R1
DG8272	C8204	C-CERA C	CK725F1A-105Z1	1	332181050R1
DG8272	C8205	C-CERA C	CK725F1A-105Z1	1	332181050R1
DG8272	C8206	C-CERA C	CK725F1A-105Z1	1	332181050R1

DG8272	C8210	C-CERA C	CK725F1A-105Z1	1	332181050R1
DG8272	C8212	C-CERA C	CK725F1A-105Z1	1	332181050R1
DG8272	C8213	C-CERA C	CK725F1A-105Z1	1	332181050R1
DG8272	C8214	C-CERA C	CK725F1A-105Z1	1	332181050R1
DG8272	C8218	C-CERA C	CK725F1A-105Z1	1	332181050R1
DG8272	C8220	C-CERA C	CK725F1A-105Z1	1	332181050R1
DG8272	C8221	C-CERA C	CK725F1A-105Z1	1	332181050R1
DG8272	C8222	C-CERA C	CK725F1A-105Z1	1	332181050R1
DG8272	C8226	C-CERA C	CK725F1A-105Z1	1	332181050R1
DG8272	C8228	C-CERA C	CK725F1A-105Z1	1	332181050R1
DG8272	C8229	C-CERA C	CK725F1A-105Z1	1	332181050R1
DG8272	C8230	C-CERA C	CK725F1A-105Z1	1	332181050R1
DG8272	C8231	C-CERA C	CK725F1A-105Z1	1	332181050R1
DG8272	C8232	C-CERA C	CK725F1A-105Z1	1	332181050R1
DG8272	C8234	C-CERA C	CK725F1A-105Z1	1	332181050R1
DG8272	C8236	C-CERA C	CK725F1A-105Z1	1	332181050R1
DG8272	C8237	C-CERA C	CK725F1A-105Z1	1	332181050R1
DG8272	C8238	C-CERA C	CK725F1A-105Z1	1	332181050R1
DG8272	C8241	CHIP ELECT C	CEWX16V-22M	1	356742209R2
DG8272	C8242	C-CERA C	CK725F1A-105Z1	1	332181050R1
DG8272	C8301	C-CERA C	CK725F1A-105Z1	1	332181050R1
DG8272	C8302	C-CERA C	CK725F1A-105Z1	1	332181050R1
DG8272	C8303	C-CERA C	CC725CH1E-102J1	1	342111024R1
DG8272	C8304	C-CERA C	CK725F1A-105Z1	1	332181050R1
DG8272	C8305	CHIP ELECT C	CEWX4V-220M	1	3567A2219R2
DG8272	C8306	C-CERA C	CK725F1A-105Z1	1	332181050R1
DG8272	C8307	C-CERA C	CC725CH1E-102J1	1	342111024R1
DG8272	C8308	C-CERA C	CK725F1A-105Z1	1	332181050R1
DG8272	C8309	C-CERA C	CK725F1A-105Z1	1	332181050R1
DG8272	C8310	C-CERA C	CK725F1A-105Z1	1	332181050R1
DG8272	C8311	CHIP ELECT C	CEWX4V-220M	1	3567A2219R2
DG8272	C8312	C-CERA C	CK725F1A-105Z1	1	332181050R1
DG8272	C8313	CHIP ELECT C	CEWX4V-220M	1	3567A2219R2

DG8272	C8314	C-CERA C	CK725F1A-105Z1	1	332181050R1	
DG8272	C8315	C-CERA C	CC725CH1E-102J1	1	342111024R1	
DG8272	C8316	C-CERA C	CK725F1A-105Z1	1	332181050R1	
DG8272	C8317	C-CERA C	CK725F1A-105Z1	1	332181050R1	
DG8272	C8318	C-CERA C	CK725F1A-105Z1	1	332181050R1	
DG8272	C8319	C-CERA C	CK725F1A-105Z1	1	332181050R1	
DG8272	C8320	CHIP ELECT C	CEWX4V-220M	1	3567A2219R2	
DG8272	C8321	C-CERA C	CK725F1A-105Z1	1	332181050R1	
DG8272	C8322	C-CERA C	CK725F1A-105Z1	1	332181050R1	
DG8272	C8323	CHIP ELECT C	CEWX4V-220M	1	3567A2219R2	
DG8272	C8324	C-CERA C	CK725F1A-105Z1	1	332181050R1	
DG8272	C8325	C-CERA C	CK725F1A-105Z1	1	332181050R1	
DG8272	C8326	C-CERA C	CK725F1A-105Z1	1	332181050R1	
DG8272	C8327	C-CERA C	CK725F1A-105Z1	1	332181050R1	
DG8272	C8328	CHIP ELECT C	CEWX16V-22M	1	356742209R2	
DG8272	C8329	C-CERA C	CK725F1A-105Z1	1	332181050R1	
DG8272	C8330	C-CERA C	CK725F1A-105Z1	1	332181050R1	
DG8272	C8331	CHIP ELECT C	CEWX16V-10M	1	356741009R2	
DG8272	C8332	C-CERA C	CK725F1A-105Z1	1	332181050R1	
DG8272	C8701	C-CERA C	CK725F1A-105Z1	1	332181050R1	
DG8272	C8702	C-CERA C	CK725F1A-105Z1	1	332181050R1	
DG8272	C8703	C-CERA C	CK725F1A-105Z1	1	332181050R1	
DG8272	C8704	CHIP ELECT C	CEWX50V-4.7M	1	356780479R2	
DG8272	C8705	C-CERA C	CK725F1E-104Z1	1	332161040R1	
DG8272	C8706	C-CERA C	CK725F1A-105Z1	1	332181050R1	
DG8272	C8707	C-CERA C	CK725F1A-105Z1	1	332181050R1	
DG8272	C8708	C-CERA C	CK725F1A-105Z1	1	332181050R1	
DG8272	C8709	CHIP ELECT C	CEWX4V-220M	1	3567A2219R2	
DG8272	C8710	C-CERA C	CK725F1A-105Z1	1	332181050R1	
DG8272-1C	D5101	C-DIODE	1SS226	1	223266R2	Except **<DC1N>**
DG8272-1C	D5201	C-DIODE	1SS226	1	223266R2	Except **<DC1N>**
DG8272-1C	D5251	C-DIODE	1SS226	1	223266R2	Except **<DC1N>**
DG8272	D8001	LED	SEC1801C	1	225386R2	

DG8272	D8002	LED	SEC1401C	1	225383R2		
DG8272	D8003	LED	SEC1201C	1	225385R2		
DG8272	D8004	LED	SEC1201C	1	225385R2		
DG8272	D8005	LED	SEC1401C	1	225383R2		
DG8272	D8701	C-DIODE	1SS352	1	223234R2		
DG8272-1C	L5001	CHOKE COIL	NCH-1471	1	231237K022R2		Except **<DC1N>**
DG8272-1C	L5002	CHOKE COIL	NCH-1471	1	231237K022R2		Except **<DC1N>**
DG8272-1C	L5003	CHOKE COIL	NCH-1471	1	231237K022R2		Except **<DC1N>**
DG8272-1C	L5004	CHOKE COIL	NCH-1471	1	231237K022R2		Except **<DC1N>**
DG8272-1C	L5005	CHOKE COIL	NCH-1471	1	231237K022R2		Except **<DC1N>**
DG8272	L8001	CHOKE COIL	NCH-1471	1	231237M022R2		
DG8272	L8002	CHOKE COIL	NCH-1471	1	231237M022R2		
DG8272	L8003	CHOKE COIL	NCH-1471	1	231237M022R2		
DG8272	L8004	CHOKE COIL	NCH-1471	1	231237M022R2		
DG8272	L8005	CHOKE COIL	NCH-1471	1	231237M022R2		
DG8272	L8006	CHOKE COIL	NCH-1471	1	231237M022R2		
DG8272	L8101	CHOKE COIL	NCH-1471	1	231237M022R2		
DG8272	L8102	CHOKE COIL	NCH-1471	1	231237M022R2		
DG8272	L8103	CHOKE COIL	NCH-1471	1	231237M022R2		
DG8272	L8301	CHOKE COIL	NCH-1473	1	231237M047R2		
DG8272	L8302	CHOKE COIL	NCH-1471	1	231237M022R2		
DG8272	L8303	CHOKE COIL	NCH-1473	1	231237M047R2		
DG8272	L8304	CHOKE COIL	NCH-1471	1	231237M022R2		
DG8272	L8701	CHOKE COIL	NCH-1473	1	231237M047R2		
DG8272	P4003B	PLUG	NPLG-4P930	1	25055977R2	N	
DG8272-1C	P5001A	PLUG(B to B)	IMSA-9850B-22Y900	1	25056206R2		Except **<DC1N>**
DG8272-1C	P5002A	PLUG	NPLG-6P932	1	25055979R2		Except **<DC1N>**
DG8272-1C	P5101	PIN JACK	NPJ-1PDYE402	1	25045591		Except **<DC1N>**
DG8272-1C	P5201	SOCKET	NSCT-4P1742	1	25051955		Except **<DC1N>**
DG8272-1C	P5401A	PLUG	CPB8348-0211	1	25056437R2		Except **<DC1N>**
DG8272	P8001A	PLUG(B to B)	IMSA-9850B-28Y900	1	25056209R2	N	
DG8272-1C	P8002A	PLUG(B to B)	IMSA-9850B-20Y900	1	25056205R2		Except **<DC1N>**
DG8272	P8302	HDMI JACK	DC1R019JDA	1	25052956R3	N	

DG8272	P8701A	PLUG(B to B)	IMSA-9850B-10Y900	1	25056200R2	N	
DG8272	P8702	PLUG	NPLG-8P660	1	25055704		
DG8272-1C	Q5001	IC	SAA7118E	1	22242060R3		Except **<DC1N>**
DG8272-1C	Q5002	IC	TC74VCX162244FT	1	2227C244DR2TO		Except **<DC1N>**
DG8272-1C	Q5004	TR	2SK3019	1	2216520R2		Except **<DC1N>**
DG8272-1C	Q5005	TR	2SK3019	1	2216520R2		Except **<DC1N>**
DG8272	Q8001	IC	Sil504	1	22242049R3		
DG8272	Q8002	IC	MC504	1	22242050R9	N	5V
DG8272	Q8003	IC	IC42S32200L-7TG	1	22242056R2	N	
DG8272	Q8003 or	IC	IS42S32200B-7T	(1)	22242031R3		
DG8272	Q8004	IC	TC7WZU04FU	1	22242078R2TO	N	
DG8272	Q8005	IC	TC74VCX162244FT	1	2227C244DR2TO	N	
DG8272-1C	Q8006	IC	TC74VCX162244FT	1	2227C244DR2TO		Except **<DC1N>**
DG8272	Q8007	IC	LM1117MPX-ADJ	1	22241648R2		
DG8272	Q8008	TR	2SK3019	1	2216520R2		
DG8272	Q8101	IC	REMBRANDT-1A	1	22242051R3	N	
DG8272	Q8102	IC(REGURATOR)	MPC2918T	1	22278018ER2NE		
DG8272	Q8201	IC	IC42S16400-7T	1	22241910R2		
DG8272	Q8201 or	IC	IC42S16400-7T	(1)	22241910R3		
DG8272	Q8202	IC	IC42S16400-7T	1	22241910R2		
DG8272	Q8202 or	IC	IC42S16400-7T	(1)	22241910R3		
DG8272	Q8203	IC	IC42S16400-7T	1	22241910R2		
DG8272	Q8203 or	IC	IC42S16400-7T	(1)	22241910R3		
DG8272	Q8204	IC	IC42S16400-7T	1	22241910R2		
DG8272	Q8204 or	IC	IC42S16400-7T	(1)	22241910R3		
DG8272	Q8205	IC	IC42S16400-7T	1	22241910R2		
DG8272	Q8205 or	IC	IC42S16400-7T	(1)	22241910R3		
DG8272	Q8301	IC	SiI9190CTG64	1	22242052R3		
DG8272	Q8302	IC	TC7SZ125FU	1	22241895R2		
DG8272	Q8303	IC	TC7SZ125FU	1	22241895R2		
DG8272	Q8304	IC	NJM2860F3-33	1	22242087R2	N	
DG8272	Q8305	IC	NJM2860F3-05	1	22242105R2	N	
DG8272	Q8306	TR	HN1C03F-B	1	2216141R2		

DG8272	Q8307	TR	2SA1774	1	2216410R2		
DG8272	Q8308	TR	2SB1132	1	2216400R2		
DG8272	Q8309	TR	NDC7002N	1	2216870R2	N	
DG8272	Q8701	IC	MPD70F3261YGC-8EA (0089)	1	NSP	N	
DG8272	Q8702	TR	NDC7002N	1	2216870R2	N	
DG8272	Q8703	TR	NDC7002N	1	2216870R2	N	
DG8272	Q8704	IC	BR24L08FV-W	1	22242070R2	N	
DG8272	Q8705	TR	NDC7002N	1	2216870R2	N	
DG8272	Q8706	IC	S-80127CNMC-JKM-T2	1	22241642R2		
DG8272-1C	R5001	C-R NET	RM7LJ220X04	1	43484722004R2		Except <**DC1N**>
DG8272-1C	R5002	C-R NET	RM7LJ220X04	1	43484722004R2		Except <**DC1N**>
DG8272-1C	R5003	C-CARBON R	RN72K1J-220FE	1	435032202R1		Except <**DC1N**>
DG8272-1C	R5004	C-CARBON R	RN72K1J-220FE	1	435032202R1		Except <**DC1N**>
DG8272-1C	R5005	C-CARBON R	RN72K1J-220FE	1	435032202R1		Except <**DC1N**>
DG8272-1C	R5006	C-CARBON R	RN72K1J-220FE	1	435032202R1		Except <**DC1N**>
DG8272-1C	R5007	C-CARBON R	RN72K1J-220FE	1	435032202R1		Except <**DC1N**>
DG8272-1C	R5009	C-CARBON R	RN72K1J-332FE	1	435033322R1		Except <**DC1N**>
DG8272-1C	R5011	C-CARBON R	RN72K1J-332FE	1	435033322R1		Except <**DC1N**>
DG8272-1C	R5012	C-CARBON R	RN72K1J-220FE	1	435032202R1		Except <**DC1N**>
DG8272-1C	R5016	C-CARBON R	RN72K1J-220FE	1	435032202R1		Except <**DC1N**>
DG8272-1C	R5017	C-CARBON R	RN72K1J-222FE	1	435032222R1		Except <**DC1N**>
DG8272-1C	R5018	C-CARBON R	RN72K1J-222FE	1	435032222R1		Except <**DC1N**>
DG8272-1C	R5021	C-CARBON R	RN72K1J-220FE	1	435032202R1		Except <**DC1N**>
DG8272-1C	R5022	C-CARBON R	RN72K1J-000JE	1	435030004R1		Except <**DC1N**>
DG8272-1C	R5023	C-CARBON R	RN72K1J-000JE	1	435030004R1		Except <**DC1N**>
DG8272-1C	R5024	C-CARBON R	RN72K1J-000JE	1	435030004R1		Except <**DC1N**>
DG8272-1C	R5025	C-CARBON R	RN72K1J-222FE	1	435032222R1		Except <**DC1N**>
DG8272-1C	R5026	C-CARBON R	RN72K1J-222FE	1	435032222R1		Except <**DC1N**>
DG8272-1C	R5091	C-CARBON R	RN72K1J-000JE	1	435030004R1		Except <**DC1N**>
DG8272-1C	R5092	C-CARBON R	RN72K1J-000JE	1	435030004R1		Except <**DC1N**>
DG8272-1C	R5093	C-CARBON R	RN72K1J-000JE	1	435030004R1		Except <**DC1N**>
DG8272-1C	R5094	C-CARBON R	RN72K1J-000JE	1	435030004R1		Except <**DC1N**>
DG8272-1C	R5095	C-CARBON R	RN72K1J-000JE	1	435030004R1		Except <**DC1N**>

DG8272-1C	R5096	C-CARBON R	RN72K1J-000JE	1	435030004R1	Except **<DC1N>**
DG8272-1C	R5101	C-CARBON R	RN72K1J-180FE	1	435031802R1	Except **<DC1N>**
DG8272-1C	R5102	C-CARBON R	RN72K1J-560FE	1	435035602R1	Except **<DC1N>**
DG8272-1C	R5201	C-CARBON R	RN72K1J-180FE	1	435031802R1	Except **<DC1N>**
DG8272-1C	R5202	C-CARBON R	RN72K1J-560FE	1	435035602R1	Except **<DC1N>**
DG8272-1C	R5251	C-CARBON R	RN72K1J-180FE	1	435031802R1	Except **<DC1N>**
DG8272-1C	R5252	C-CARBON R	RN72K1J-560FE	1	435035602R1	Except **<DC1N>**
DG8272-1C	R5308	C-CARBON R	RN72K1J-000JE	1	435030004R1	Except **<DC1N>**
DG8272-1C	R5309	C-CARBON R	RN72K1J-000JE	1	435030004R1	Except **<DC1N>**
DG8272-1C	R5310	C-CARBON R	RN72K1J-000JE	1	435030004R1	Except **<DC1N>**
DG8272-1C	R5391	C-CARBON R	RN72K1J-000JE	1	435030004R1	Except **<DC1N>**
DG8272-1C	R5392	C-CARBON R	RN72K1J-000JE	1	435030004R1	Except **<DC1N>**
DG8272-1C	R5393	C-CARBON R	RN72K1J-000JE	1	435030004R1	Except **<DC1N>**
DG8272-1C	R5394	C-CARBON R	RN72K1J-000JE	1	435030004R1	Except **<DC1N>**
DG8272-1C	R5395	C-CARBON R	RN72K1J-000JE	1	435030004R1	Except **<DC1N>**
DG8272-1C	R5396	C-CARBON R	RN72K1J-000JE	1	435030004R1	Except **<DC1N>**
DG8272-1C	R5511	C-CARBON R	RN72K1J-560FE	1	435035602R1	Except **<DC1N>**
DG8272-1C	R5611	C-CARBON R	RN72K1J-560FE	1	435035602R1	Except **<DC1N>**
DG8272-1C	R5711	C-CARBON R	RN72K1J-560FE	1	435035602R1	Except **<DC1N>**
DG8272	R8001	C-CARBON R	RN72K1J-220JE	1	435032204R1	
DG8272	R8002	C-CARBON R	RN72K1J-220JE	1	435032204R1	
DG8272	R8003	C-CARBON R	RN72K1J-220JE	1	435032204R1	
DG8272	R8004	C-CARBON R	RN72K1J-101JE	1	435031014R1	
DG8272	R8005	C-R NET	RM7LJ100X04	1	43484710004R2	N
DG8272	R8006	C-R NET	RM7LJ100X04	1	43484710004R2	N
DG8272	R8008	C-R NET	RM7LJ100X04	1	43484710004R2	N
DG8272	R8009	C-R NET	RM7LJ100X04	1	43484710004R2	N
DG8272	R8011	C-R NET	RM7LJ100X04	1	43484710004R2	N
DG8272	R8012	C-R NET	RM7LJ100X04	1	43484710004R2	N
DG8272	R8013	C-CARBON R	RN72K1J-100JE	1	435031004R1	
DG8272	R8018	C-CARBON R	RN72K1J-472JE	1	435034724R1	
DG8272	R8019	C-CARBON R	RN72K1J-472JE	1	435034724R1	
DG8272	R8024	C-CARBON R	RN72K1J-000JE	1	435030004R1	

DG8272	R8025	C-CARBON R	RN72K1J-000JE	1	435030004R1		
DG8272	R8026	C-CARBON R	RN72K1J-000JE	1	435030004R1		
DG8272	R8027	C-CARBON R	RN72K1J-000JE	1	435030004R1		
DG8272	R8028	C-CARBON R	RN72K1J-000JE	1	435030004R1		
DG8272	R8029	C-CARBON R	RN72K1J-000JE	1	435030004R1		
DG8272	R8032	C-CARBON R	RN72K1J-103JE	1	435031034R1		
DG8272	R8034	C-CARBON R	RN72K1J-222JE	1	435032224R1		
DG8272	R8035	C-CARBON R	RN72K1J-222JE	1	435032224R1		
DG8272	R8036	C-CARBON R	RN72K1J-222JE	1	435032224R1		
DG8272	R8037	C-CARBON R	RN72K1J-000JE	1	435030004R1		
DG8272	R8038	C-CARBON R	RN72K1J-102JE	1	435031024R1		
DG8272	R8041	C-CARBON R	RN72K1J-101JE	1	435031014R1		
DG8272	R8042	C-R NET	RM7LJ103X04	1	43484710304R2	N	
DG8272	R8043	C-R NET	RM7LJ103X04	1	43484710304R2	N	
DG8272	R8044	C-CARBON R	RN72K1J-104JE	1	435031044R1		
DG8272	R8045	C-CARBON R	RN72K1J-472JE	1	435034724R1		/subtitle=H
DG8272	R8047	C-CARBON R	RN72K1J-472JE	1	435034724R1		/film=H
DG8272	R8050	C-CARBON R	RN72K1J-472JE	1	435034724R1		/PFDA=L
DG8272	R8051	C-CARBON R	RN72K1J-472JE	1	435034724R1		SADR=H
DG8272	R8053	C-CARBON R	RN72K1J-102JE	1	435031024R1		
DG8272	R8054	C-CARBON R	RN72K1J-000JE	1	435030004R1		
DG8272	R8055	C-CARBON R	RN72K1J-105JE	1	435031054R1		
DG8272	R8056	C-CARBON R	RN72K1J-000JE	1	435030004R1		
DG8272	R8057	C-CARBON R	RN72K1J-472JE	1	435034724R1		/GMODE=L
DG8272	R8058	C-CARBON R	RN72K1J-472JE	1	435034724R1		/EXTGMD=H
DG8272	R8059	C-CARBON R	RN72K1J-000JE	1	435030004R1		
DG8272	R8060	C-CARBON R	RN72K1J-000JE	1	435030004R1		
DG8272	R8061	C-CARBON R	RN72K1J-222JE	1	435032224R1		
DG8272	R8062	C-CARBON R	RN72K1J-222JE	1	435032224R1		
DG8272	R8064	C-CARBON R	RN72K1J-222JE	1	435032224R1		
DG8272	R8065	C-CARBON R	RN72K1J-103JE	1	435031034R1		
DG8272	R8066	C-CARBON R	RN72K1J-102JE	1	435031024R1		
DG8272	R8067	C-CARBON R	RN72K1J-103JE	1	435031034R1		

DG8272	R8068	C-CARBON R	RN72K1J-102JE	1	435031024R1	
DG8272	R8071	C-CARBON R	RN72K1J-472JE	1	435034724R1	/YPbPr=L
DG8272	R8073	C-CARBON R	RN72K1J-222JE	1	435032224R1	
DG8272	R8074	C-CARBON R	RN72K1J-222JE	1	435032224R1	
DG8272	R8075	C-CARBON R	RN72K1J-105FE	1	435031052R1	
DG8272	R8076	C-CARBON R	RN72K1J-102FE	1	435031022R1	
DG8272	R8078	C-CARBON R	RN72K1J-220JE	1	435032204R1	
DG8272	R8079	C-CARBON R	RN72K1J-151FE	1	435031512R1	
DG8272	R8080	C-CARBON R	RN72K1J-391FE	1	435033912R1	
DG8272	R8081	C-CARBON R	RN72K1J-272FE	1	435032722R1	
DG8272	R8101	C-CARBON R	RN72K1J-000JE	1	435030004R1	
DG8272	R8104	C-CARBON R	RN72K1J-103JE	1	435031034R1	
DG8272	R8105	C-CARBON R	RN72K1J-000JE	1	435030004R1	
DG8272	R8106	C-CARBON R	RN72K1J-000JE	1	435030004R1	
DG8272	R8107	C-CARBON R	RN72K1J-000JE	1	435030004R1	
DG8272	R8108	C-CARBON R	RN72K1J-000JE	1	435030004R1	
DG8272	R8112	C-CARBON R	RN72K1J-000JE	1	435030004R1	
DG8272	R8113	C-CARBON R	RN72K1J-000JE	1	435030004R1	
DG8272	R8114	C-CARBON R	RN72K1J-000JE	1	435030004R1	
DG8272	R8115	C-CARBON R	RN72K1J-000JE	1	435030004R1	
DG8272	R8116	C-CARBON R	RN72K1J-000JE	1	435030004R1	
DG8272	R8117	C-CARBON R	RN72K1J-000JE	1	435030004R1	
DG8272	R8118	C-CARBON R	RN72K1J-000JE	1	435030004R1	
DG8272	R8119	C-CARBON R	RN72K1J-000JE	1	435030004R1	
DG8272	R8120	C-CARBON R	RN72K1J-000JE	1	435030004R1	
DG8272	R8121	C-CARBON R	RN72K1J-000JE	1	435030004R1	
DG8272	R8122	C-CARBON R	RN72K1J-000JE	1	435030004R1	
DG8272	R8123	C-CARBON R	RN72K1J-000JE	1	435030004R1	
DG8272	R8124	C-CARBON R	RN72K1J-000JE	1	435030004R1	
DG8272	R8125	C-CARBON R	RN72K1J-000JE	1	435030004R1	
DG8272	R8126	C-CARBON R	RN72K1J-000JE	1	435030004R1	
DG8272	R8127	C-CARBON R	RN72K1J-000JE	1	435030004R1	
DG8272	R8128	C-CARBON R	RN72K1J-000JE	1	435030004R1	

DG8272	R8129	C-CARBON R	RN72K1J-000JE	1	435030004R1	
DG8272	R8130	C-CARBON R	RN72K1J-000JE	1	435030004R1	
DG8272	R8131	C-CARBON R	RN72K1J-000JE	1	435030004R1	
DG8272	R8132	C-CARBON R	RN72K1J-220JE	1	435032204R1	
DG8272	R8133	C-CARBON R	RN72K1J-102JE	1	435031024R1	
DG8272	R8134	C-CARBON R	RN72K1J-000JE	1	435030004R1	
DG8272	R8135	C-CARBON R	RN72K1J-000JE	1	435030004R1	
DG8272	R8136	C-CARBON R	RN72K1J-103JE	1	435031034R1	
DG8272	R8137	C-CARBON R	RN72K1J-220JE	1	435032204R1	
DG8272	R8138	C-CARBON R	RN72K1J-220JE	1	435032204R1	
DG8272	R8139	C-CARBON R	RN72K1J-220JE	1	435032204R1	
DG8272	R8140	C-CARBON R	RN72K1J-220JE	1	435032204R1	
DG8272	R8141	C-CARBON R	RN72K1J-220JE	1	435032204R1	
DG8272	R8142	C-R NET	RM7LJ220X04	1	43484722004R2	N
DG8272	R8143	C-R NET	RM7LJ220X04	1	43484722004R2	N
DG8272	R8144	C-R NET	RM7LJ220X04	1	43484722004R2	N
DG8272	R8145	C-R NET	RM7LJ220X04	1	43484722004R2	N
DG8272	R8146	C-R NET	RM7LJ220X04	1	43484722004R2	N
DG8272	R8147	C-R NET	RM7LJ220X04	1	43484722004R2	N
DG8272	R8148	C-CARBON R	RN72K1J-470JE	1	435034704R1	
DG8272	R8149	C-CARBON R	RN72K1J-470JE	1	435034704R1	
DG8272	R8150	C-CARBON R	RN72K1J-470JE	1	435034704R1	
DG8272	R8151	C-CARBON R	RN72K1J-470JE	1	435034704R1	
DG8272	R8152	C-CARBON R	RN72K1J-151JE	1	435031514R1	
DG8272	R8153	C-CARBON R	RN72K1J-151JE	1	435031514R1	
DG8272	R8161	C-CARBON R	RN72K1J-000JE	1	435030004R1	
DG8272	R8201	C-R NET	RM7LJ471X04	1	43484747104R2	N
DG8272	R8202	C-R NET	RM7LJ471X04	1	43484747104R2	N
DG8272	R8203	C-R NET	RM7LJ471X04	1	43484747104R2	N
DG8272	R8204	C-R NET	RM7LJ471X04	1	43484747104R2	N
DG8272	R8205	C-R NET	RM7LJ471X04	1	43484747104R2	N
DG8272	R8206	C-R NET	RM7LJ471X04	1	43484747104R2	N
DG8272	R8207	C-CARBON R	RN72K1J-471JE	1	435034714R1	

DG8272	R8209	C-R NET	RM7LJ471X04	1	43484747104R2	N
DG8272	R8210	C-R NET	RM7LJ471X04	1	43484747104R2	N
DG8272	R8211	C-R NET	RM7LJ471X04	1	43484747104R2	N
DG8272	R8212	C-R NET	RM7LJ471X04	1	43484747104R2	N
DG8272	R8214	C-CARBON R	RN72K1J-000JE	1	435030004R1	
DG8272	R8301	C-CARBON R	RN72K1J-000JE	1	435030004R1	
DG8272	R8302	C-CARBON R	RN72K1J-000JE	1	435030004R1	
DG8272	R8303	C-CARBON R	RN72K1J-000JE	1	435030004R1	
DG8272	R8304	C-CARBON R	RN72K1J-471JE	1	435034714R1	
DG8272	R8305	C-CARBON R	RN72K1J-103JE	1	435031034R1	
DG8272	R8306	C-CARBON R	RN72K1J-470JE	1	435034704R1	
DG8272	R8307	C-CARBON R	RN72K1J-102JE	1	435031024R1	
DG8272	R8308	C-CARBON R	RN72K1J-104JE	1	435031044R1	
DG8272	R8309	C-CARBON R	RN72K1J-104JE	1	435031044R1	
DG8272	R8310	C-CARBON R	RN72K1J-220JE	1	435032204R1	
DG8272	R8311	C-CARBON R	RN72K1J-220JE	1	435032204R1	
DG8272	R8312	C-CARBON R	RN72K1J-222JE	1	435032224R1	
DG8272	R8313	C-CARBON R	RN72K1J-222JE	1	435032224R1	
DG8272	R8314	C-CARBON R	RN72K1J-561FE	1	435035612R1	
DG8272	R8315	C-R NET	RM7LJ000X04	1	43484700004R2	N
DG8272	R8316	C-R NET	RM7LJ000X04	1	43484700004R2	N
DG8272	R8317	C-R NET	RM7LJ000X04	1	43484700004R2	N
DG8272	R8318	C-R NET	RM7LJ000X04	1	43484700004R2	N
DG8272	R8319	C-CARBON R	RN72K1J-000JE	1	435030004R1	
DG8272	R8320	C-R NET	RM7LJ000X04	1	43484700004R2	N
DG8272	R8321	C-R NET	RM7LJ000X04	1	43484700004R2	N
DG8272	R8322	C-CARBON R	RN72K1J-473JE	1	435034734R1	
DG8272	R8323	C-CARBON R	RN72K1J-103JE	1	435031034R1	
DG8272	R8324	C-CARBON R	RN72K1J-103JE	1	435031034R1	
DG8272	R8325	C-CARBON R	RN72K1J-472JE	1	435034724R1	
DG8272	R8326	C-CARBON R	RN72K1J-472JE	1	435034724R1	
DG8272	R8327	C-CARBON R	RN72K1J-102JE	1	435031024R1	
DG8272	R8328	C-CARBON R	RN72K1J-332JE	1	435033324R1	

DG8272	R8329	C-CARBON R	RN72K1J-332JE	1	435033324R1	
DG8272	R8331	C-CARBON R	RN72K1J-182JE	1	435031824R1	
DG8272	R8332	C-CARBON R	RN72K1J-332JE	1	435033324R1	
DG8272	R8333	C-CARBON R	RN72K1J-102JE	1	435031024R1	
DG8272	R8334	C-CARBON R	RN72K1J-202JE	1	435032024R1	
DG8272	R8335	C-CARBON R	RN72K1J-202JE	1	435032024R1	
DG8272	R8337	C-CARBON R	RN72K1J-472JE	1	435034724R1	
DG8272	R8338	C-CARBON R	RN72K1J-472JE	1	435034724R1	
DG8272	R8339	C-CARBON R	RN72K1J-222JE	1	435032224R1	
DG8272	R8348	C-CARBON R	RN72K1J-150FE	1	435031502R1	N
DG8272	R8702	C-CARBON R	RN72K1J-103JE	1	435031034R1	
DG8272	R8705	C-CARBON R	RN72K1J-000JE	1	435030004R1	
DG8272	R8706	C-CARBON R	RN72K1J-103JE	1	435031034R1	
DG8272	R8707	C-CARBON R	RN72K1J-103JE	1	435031034R1	
DG8272	R8708	C-CARBON R	RN72K1J-000JE	1	435030004R1	
DG8272	R8709	C-CARBON R	RN72K1J-220JE	1	435032204R1	
DG8272	R8710	C-CARBON R	RN72K1J-103JE	1	435031034R1	
DG8272	R8713	C-CARBON R	RN72K1J-220JE	1	435032204R1	
DG8272	R8714	C-CARBON R	RN72K1J-220JE	1	435032204R1	
DG8272	R8715	C-CARBON R	RN72K1J-220JE	1	435032204R1	
DG8272	R8716	C-CARBON R	RN72K1J-220JE	1	435032204R1	
DG8272	R8717	C-CARBON R	RN72K1J-000JE	1	435030004R1	
DG8272	R8718	C-CARBON R	RN72K1J-000JE	1	435030004R1	
DG8272	R8719	C-CARBON R	RN72K1J-220JE	1	435032204R1	
DG8272	R8720	C-CARBON R	RN72K1J-220JE	1	435032204R1	
DG8272	R8721	C-CARBON R	RN72K1J-220JE	1	435032204R1	
DG8272	R8722	C-CARBON R	RN72K1J-470JE	1	435034704R1	
DG8272	R8723	C-CARBON R	RN72K1J-470JE	1	435034704R1	
DG8272	R8724	C-CARBON R	RN72K1J-470JE	1	435034704R1	
DG8272	R8725	C-CARBON R	RN72K1J-470JE	1	435034704R1	
DG8272	R8726	C-R NET	RM7LJ220X04	1	43484722004R2	N
DG8272	R8727	C-R NET	RM7LJ220X04	1	43484722004R2	N
DG8272	R8728	C-R NET	RM7LJ103X04	1	43484710304R2	N

DG8272	R8729	C-CARBON R	RN72K1J-472JE	1	435034724R1		
DG8272	R8730	C-CARBON R	RN72K1J-472JE	1	435034724R1		
DG8272	R8731	C-CARBON R	RN72K1J-473JE	1	435034734R1		
DG8272	R8732	C-CARBON R	RN72K1J-220JE	1	435032204R1		
DG8272	R8733	C-CARBON R	RN72K1J-473JE	1	435034734R1		
DG8272	R8734	C-CARBON R	RN72K1J-220JE	1	435032204R1		
DG8272	R8735	C-CARBON R	RN72K1J-473JE	1	435034734R1		
DG8272	R8736	C-CARBON R	RN72K1J-220JE	1	435032204R1		
DG8272	R8737	C-R NET	RM7LJ220X04	1	43484722004R2	N	
DG8272	R8738	C-CARBON R	RN72K1J-473JE	1	435034734R1		
DG8272	R8739	C-R NET	RM7LJ220X04	1	43484722004R2	N	
DG8272	R8740	C-CARBON R	RN72K1J-220JE	1	435032204R1		
DG8272	R8741	C-CARBON R	RN72K1J-220JE	1	435032204R1		
DG8272	R8742	C-CARBON R	RN72K1J-220JE	1	435032204R1		
DG8272	R8743	C-CARBON R	RN72K1J-220JE	1	435032204R1		
DG8272	R8744	C-CARBON R	RN72K1J-000JE	1	435030004R1		
DG8272	R8745	C-CARBON R	RN72K1J-220JE	1	435032204R1		
DG8272	R8746	C-CARBON R	RN72K1J-000JE	1	435030004R1		
DG8272	R8748	C-CARBON R	RN72K1J-222JE	1	435032224R1		
DG8272	R8749	C-CARBON R	RN72K1J-222JE	1	435032224R1		
DG8272	R8750	C-CARBON R	RN72K1J-222JE	1	435032224R1		
DG8272	R8751	C-CARBON R	RN72K1J-222JE	1	435032224R1		
DG8272	R8752	C-CARBON R	RN72K1J-000JE	1	435030004R1		
DG8272	R8753	C-CARBON R	RN72K1J-220JE	1	435032204R1		
DG8272	R8754	C-CARBON R	RN72K1J-103JE	1	435031034R1		
DG8272-1C	X5001	CRYSTAL	FCX-03-24.576MHz	1	3010385R2		Except **<DC1N>**
DG8272	X8001	CRYSTAL	FCX03-20.000MHz	1	3010389R2	N	
DG8272	X8002	CRYSTAL	FCX-03MX-27MHz	1	3010355R2	N	
DG8272	X8701	CERA LOCK	CSTCR5M00G53-B0	1	3010356R2		

U18: AUDIO DAC PC BOARD NAAR-8263

U19: IEEE1394 TERMINAL PC BOARD NADG-8468

PWB NO.	CIRCUIT NO.	PART NAME	DESCRIPTION		PART NO.	REMARKS
AR8263-1G	C3523	CHIP ELECT C	CEWX6.3V-100M	1	356721019R2	Only <GR6P>
AR8263-1G	C3524	C-CERA C	CK725F1A-105Z1	1	332181050R1	Only <GR6P>
AR8263-1G	C3525	CHIP ELECT C	CEWX4V-220M	1	3567A2219R2	Only <GR6P>
AR8263-1G	C3530	CHIP ELECT C	CEWX50V-1M	1	356780109R2	Only <GR6P>
AR8263-1G	C3531	CHIP ELECT C	CEWX50V-1M	1	356780109R2	Only <GR6P>
AR8263-1G	C3532	CHIP ELECT C	CEWX50V-1M	1	356780109R2	Only <GR6P>
AR8263-1G	C3533	CHIP ELECT C	CEWX50V-1M	1	356780109R2	Only <GR6P>
AR8263-1G	C3534	CHIP ELECT C	CEWX50V-1M	1	356780109R2	Only <GR6P>
AR8263-1G	C3536	C-CERA C	CK725F1A-105Z1	1	332181050R1	Only <GR6P>
AR8263-1G	C3537	CHIP ELECT C	CEWX4V-220M	1	3567A2219R2	Only <GR6P>
AR8263	C4004	C-CERA C	CK725F1A-105Z1	1	332181050R1	
AR8263	C4005	CHIP ELECT C	CEWX6.3V-100M	1	356721019R2	
AR8263	C4008	C-CERA C	CK725F1A-105Z1	1	332181050R1	
AR8263	C4009	C-CERA C	CK725F1A-105Z1	1	332181050R1	
AR8263	C4010	CHIP ELECT C	CEWX6.3V-220M	1	356722219R2	
AR8263	C4011	C-CERA C	CK725F1A-105Z1	1	332181050R1	
AR8263	C4012	CHIP ELECT C	CEWX6.3V-100M	1	356721019R2	
AR8263	C4013	CHIP ELECT C	CEWX6.3V-100M	1	356721019R2	
AR8263	C4014	C-CERA C	CK725F1A-105Z1	1	332181050R1	
AR8263	C4015	C-CERA C	CK725F1A-105Z1	1	332181050R1	
AR8263	C4016	CHIP ELECT C	CEWX6.3V-220M	1	356722219R2	
AR8263	C4017	C-CERA C	CC725CH1H-120J1	1	342101204R1	
AR8263	C4018	CHIP ELECT C	CEWX6.3V-220M	1	356722219R2	
AR8263	C4019	CHIP ELECT C	CEWX6.3V-220M	1	356722219R2	
AR8263	C4020	C-CERA C	CK725F1A-105Z1	1	332181050R1	
AR8263	C4021	C-CERA C	CK725F1A-105Z1	1	332181050R1	
AR8263	C4022	C-CERA C	CK725F1A-105Z1	1	332181050R1	
AR8263	C4023	C-CERA C	CK725F1A-105Z1	1	332181050R1	
AR8263	C4024	C-CERA C	CC725CH1H-120J1	1	342101204R1	
AR8263	C4026	C-CERA C	CK725F1A-105Z1	1	332181050R1	
AR8263	C4028	C-CERA C	CK725F1A-105Z1	1	332181050R1	
AR8263	C4031	C-CERA C	CK725F1A-105Z1	1	332181050R1	
AR8263	C4032	CHIP ELECT C	CEWX6.3V-220M	1	356722219R2	
AR8263	C4033	C-CERA C	CC725CH1H-080D1	1	342100802R1	
AR8263	C4034	C-CERA C	CK725F1A-105Z1	1	332181050R1	
AR8263	C4035	C-CERA C	CK725F1A-105Z1	1	332181050R1	
AR8263	C4036	C-CERA C	CK725F1A-105Z1	1	332181050R1	
AR8263	C4037	C-CERA C	CC725CH1H-080D1	1	342100802R1	
AR8263	C4038	C-CERA C	CK725F1A-105Z1	1	332181050R1	
AR8263	C4039	C-CERA C	CC725CH1H-220J1	1	342102204R1	

AR8263	C4040	C-CERA C	CK725F1A-105Z1	1	332181050R1		
AR8263	C4041	C-CERA C	CC725CH1H-150J1	1	342101504R1		
AR8263	C4042	C-CERA C	CK725F1A-105Z1	1	332181050R1		
AR8263	C4043	CHIP ELECT C	CEWX16V-47M	1	356744709R2		
AR8263	C4044	C-CERA C	CK725F1A-105Z1	1	332181050R1		
AR8263	C4045	C-CERA C	CK725F1A-105Z1	1	332181050R1		
AR8263	C4046	C-CERA C	CK725F1A-105Z1	1	332181050R1		
AR8263	C4047	C-CERA C	CC725CH1H-150J1	1	342101504R1		
AR8263	C4048	CHIP ELECT C	CEWT6.3V-470M	1	395724717R2		
AR8263	C4049	CHIP ELECT C	CEWX6.3V-220M	1	356722219R2		
AR8263	C4050	C-CERA C	CK725F1A-105Z1	1	332181050R1		
AR8263	C4051	C-CERA C	CK725F1A-105Z1	1	332181050R1		
AR8263	C4052	C-CERA C	CC725CH1H-220J1	1	342102204R1		
AR8263	C4053	C-CERA C	CC725CH1H-470J1	1	342104704R1		
AR8263	C4054	C-CERA C	CK725F1A-105Z1	1	332181050R1		
AR8263	C4055	C-CERA C	CC725CH1H-220J1	1	342102204R1		
AR8263	C4056	C-CERA C	CC725CH1H-102J1	1	342101024R1		
AR8263	C4057	C-CERA C	CK725F1A-105Z1	1	332181050R1		
AR8263	C4058	C-CERA C	CK725F1A-105Z1	1	332181050R1		
AR8263	C4059	CHIP ELECT C	CEWX6.3V-220M	1	356722219R2		
AR8263	C4060	C-CERA C	CK725F1A-105Z1	1	332181050R1		
AR8263	C4063	C-CERA C	CK725F1A-105Z1	1	332181050R1		
AR8263	C4064	C-CERA C	CK725F1A-105Z1	1	332181050R1		
AR8263-1B	C4065	C-CERA C	CK725F1A-105Z1	1	332181050R1		**<DC1N> <WT3P> GK3P>**
AR8263-1E	C4065	C-CERA C	CK725F1A-105Z1	1	332181050R1		**<PP2P>**
AR8263-1B	C4066	C-CERA C	CK725F1A-105Z1	1	332181050R1		**<DC1N> <WT3P> GK3P>**
AR8263-1E	C4066	C-CERA C	CK725F1A-105Z1	1	332181050R1		**<PP2P>**
AR8263	C4207	CHIP ELECT C	CEWX25V-100M	1	356751019R2	N	
AR8263	C4208	CHIP ELECT C	CEWX25V-100M	1	356751019R2	N	
AR8263	C4209	CHIP ELECT C	CEWX25V-100M	1	356751019R2	N	
AR8263	C4210	CHIP ELECT C	CEWX25V-100M	1	356751019R2	N	
AR8263	C4302	CHIP ELECT C	CEWX16V-10M	1	356741009R2		
AR8263	C4303	CHIP ELECT C	CEWX16V-47M	1	356744709R2		
AR8263	C4305	CHIP ELECT C	CEWX6.3V-100M	1	356721019R2		
AR8263	C4307	CHIP ELECT C	CEWX6.3V-100M	1	356721019R2		
AR8263	C4309	CHIP ELECT C	CE30W6.3V-100M(RVO)	1	396121017R2	N	
AR8263	C4312	CHIP ELECT C	CE30W6.3V-100M(RVO)	1	396121017R2	N	
AR8263	C4321	TF C	ECQ-B50V-821J	1	374728214		
AR8263	C4322	TF C	ECQ-B50V-821J	1	374728214		
AR8263	C4323	TF C	ECQ-B50V-821J	1	374728214		
AR8263	C4324	TF C	ECQ-B50V-821J	1	374728214		
AR8263	C4325	TF C	ECQ-B50V-391K	1	374723915		
AR8263	C4326	TF C	ECQ-B50V-391K	1	374723915		

AR8263	C4327	TF C	ECQ-B50V-391K	1	374723915	
AR8263	C4328	TF C	ECQ-B50V-391K	1	374723915	
AR8263	C4329	CHIP ELECT C	CEWX16V-47M	1	356744709R2	
AR8263	C4330	CHIP ELECT C	CEWX16V-47M	1	356744709R2	
AR8263	C4331	CHIP ELECT C	CEWX16V-47M	1	356744709R2	
AR8263	C4332	CHIP ELECT C	CEWX16V-47M	1	356744709R2	
AR8263	C4339	TF C	ECQ-B50V-122J	1	374721224	
AR8263	C4340	TF C	ECQ-B50V-122J	1	374721224	
AR8263	C4341	TF C	ECQ-B50V-471J	1	374724714	
AR8263	C4342	TF C	ECQ-B50V-471J	1	374724714	
AR8263	C4343	TF C	ECQ-B50V-101K	1	374721015	
AR8263	C4344	TF C	ECQ-B50V-101K	1	374721015	
AR8263	C4402	CHIP ELECT C	CEWX16V-10M	1	356741009R2	
AR8263	C4403	CHIP ELECT C	CEWX16V-47M	1	356744709R2	
AR8263	C4405	CHIP ELECT C	CEWX6.3V-100M	1	356721019R2	
AR8263	C4407	CHIP ELECT C	CEWX6.3V-100M	1	356721019R2	
AR8263	C4409	CHIP ELECT C	CE30W6.3V-100M(RVO)	1	396121017R2	N
AR8263	C4412	CHIP ELECT C	CE30W6.3V-100M(RVO)	1	396121017R2	N
AR8263	C4421	TF C	ECQ-B50V-821J	1	374728214	
AR8263	C4422	TF C	ECQ-B50V-821J	1	374728214	
AR8263	C4423	TF C	ECQ-B50V-821J	1	374728214	
AR8263	C4424	TF C	ECQ-B50V-821J	1	374728214	
AR8263	C4425	TF C	ECQ-B50V-391K	1	374723915	
AR8263	C4426	TF C	ECQ-B50V-391K	1	374723915	
AR8263	C4427	TF C	ECQ-B50V-391K	1	374723915	
AR8263	C4428	TF C	ECQ-B50V-391K	1	374723915	
AR8263	C4429	CHIP ELECT C	CEWX16V-47M	1	356744709R2	
AR8263	C4430	CHIP ELECT C	CEWX16V-47M	1	356744709R2	
AR8263	C4431	CHIP ELECT C	CEWX16V-47M	1	356744709R2	
AR8263	C4432	CHIP ELECT C	CEWX16V-47M	1	356744709R2	
AR8263	C4439	TF C	ECQ-B50V-122J	1	374721224	
AR8263	C4440	TF C	ECQ-B50V-122J	1	374721224	
AR8263	C4441	TF C	ECQ-B50V-471J	1	374724714	
AR8263	C4442	TF C	ECQ-B50V-471J	1	374724714	
AR8263	C4443	TF C	ECQ-B50V-101K	1	374721015	
AR8263	C4444	TF C	ECQ-B50V-101K	1	374721015	
AR8263	C4502	CHIP ELECT C	CEWX16V-10M	1	356741009R2	
AR8263	C4503	CHIP ELECT C	CEWX16V-47M	1	356744709R2	
AR8263	C4505	CHIP ELECT C	CEWX6.3V-100M	1	356721019R2	
AR8263	C4507	CHIP ELECT C	CEWX6.3V-100M	1	356721019R2	
AR8263	C4509	CHIP ELECT C	CE30W6.3V-100M(RVO)	1	396121017R2	N
AR8263	C4512	CHIP ELECT C	CE30W6.3V-100M(RVO)	1	396121017R2	N
AR8263	C4521	TF C	ECQ-B50V-821J	1	374728214	
AR8263	C4522	TF C	ECQ-B50V-821J	1	374728214	
AR8263	C4523	TF C	ECQ-B50V-821J	1	374728214	

AR8263	C4524	TF C	ECQ-B50V-821J	1	374728214	
AR8263	C4525	TF C	ECQ-B50V-391K	1	374723915	
AR8263	C4526	TF C	ECQ-B50V-391K	1	374723915	
AR8263	C4527	TF C	ECQ-B50V-391K	1	374723915	
AR8263	C4528	TF C	ECQ-B50V-391K	1	374723915	
AR8263	C4529	CHIP ELECT C	CEWX16V-47M	1	356744709R2	
AR8263	C4530	CHIP ELECT C	CEWX16V-47M	1	356744709R2	
AR8263	C4531	CHIP ELECT C	CEWX16V-47M	1	356744709R2	
AR8263	C4532	CHIP ELECT C	CEWX16V-47M	1	356744709R2	
AR8263	C4539	TF C	ECQ-B50V-122J	1	374721224	
AR8263	C4540	TF C	ECQ-B50V-122J	1	374721224	
AR8263	C4541	TF C	ECQ-B50V-471J	1	374724714	
AR8263	C4542	TF C	ECQ-B50V-471J	1	374724714	
AR8263	C4543	TF C	ECQ-B50V-101K	1	374721015	
AR8263	C4544	TF C	ECQ-B50V-101K	1	374721015	
AR8263	C4602	CHIP ELECT C	CEWX16V-10M	1	356741009R2	
AR8263	C4603	CHIP ELECT C	CEWX16V-47M	1	356744709R2	
AR8263	C4605	CHIP ELECT C	CEWX6.3V-100M	1	356721019R2	
AR8263	C4607	CHIP ELECT C	CEWX6.3V-100M	1	356721019R2	
AR8263	C4609	CHIP ELECT C	CE30W6.3V-100M(RVO)	1	396121017R2	N
AR8263	C4612	CHIP ELECT C	CE30W6.3V-100M(RVO)	1	396121017R2	N
AR8263	C4621	TF C	ECQ-B50V-821J	1	374728214	
AR8263	C4622	TF C	ECQ-B50V-821J	1	374728214	
AR8263	C4623	TF C	ECQ-B50V-821J	1	374728214	
AR8263	C4624	TF C	ECQ-B50V-821J	1	374728214	
AR8263	C4625	TF C	ECQ-B50V-391K	1	374723915	
AR8263	C4626	TF C	ECQ-B50V-391K	1	374723915	
AR8263	C4627	TF C	ECQ-B50V-391K	1	374723915	
AR8263	C4628	TF C	ECQ-B50V-391K	1	374723915	
AR8263	C4629	CHIP ELECT C	CEWX16V-47M	1	356744709R2	
AR8263	C4630	CHIP ELECT C	CEWX16V-47M	1	356744709R2	
AR8263	C4631	CHIP ELECT C	CEWX16V-47M	1	356744709R2	
AR8263	C4632	CHIP ELECT C	CEWX16V-47M	1	356744709R2	
AR8263	C4639	TF C	ECQ-B50V-122J	1	374721224	
AR8263	C4640	TF C	ECQ-B50V-122J	1	374721224	
AR8263	C4641	TF C	ECQ-B50V-471J	1	374724714	
AR8263	C4642	TF C	ECQ-B50V-471J	1	374724714	
AR8263	C4643	TF C	ECQ-B50V-101K	1	374721015	
AR8263	C4644	TF C	ECQ-B50V-101K	1	374721015	
AR8263	D4002	C-DIODE	1SS355	1	223269R2	
AR8263	D4003	C-DIODE	1SS355	1	223269R2	
AR8263	D4204	C-DIODE	1SS355	1	223269R2	
AR8263	D4205	C-DIODE	1SS355	1	223269R2	
AR8263	D4206	C-DIODE	1SS355	1	223269R2	
AR8263	D4301	C-DIODE	1SS355	1	223269R2	

AR8263	D4302	C-DIODE	1SS355	1	223269R2		
AR8263	D4401	C-DIODE	1SS355	1	223269R2		
AR8263	D4402	C-DIODE	1SS355	1	223269R2		
AR8263	D4501	C-DIODE	1SS355	1	223269R2		
AR8263	D4502	C-DIODE	1SS355	1	223269R2		
AR8263	D4601	C-DIODE	1SS355	1	223269R2		
AR8263	D4602	C-DIODE	1SS355	1	223269R2		
AR8263	E4001	RETAINER	KANAGU(ｱｰｽ)	1	27141059		
AR8263	JL4001	PVC	PVUL600V016/42L=50	1	72150050303	N	
AR8263	JL4002	PVC	PVUL600V016/42L=50	1	72150050303	N	
AR8263	JL4003	PVC	PVUL600V016/42L=50	1	72150050303	N	
AR8263	JL4004	PVC	PVUL600V016/42L=450	1	72150450303	N	
AR8263	JL4005	PVC	1007#24 .2/7HAND B	1	72120160505		
AR8263	JL4006	PVC	1007#24 .2/7HAND B	1	72120060505		
AR8263-1G	L3507	CHOKE COIL	BLM21B222SPT	1	230921R2		**Only <GR6P>**
AR8263-1G	L3508	CHOKE COIL	BLM21B222SPT	1	230921R2		**Only <GR6P>**
AR8263-1G	L3509	CHOKE COIL	BLM21B222SPT	1	230921R2		**Only <GR6P>**
AR8263-1G	L3510	CHOKE COIL	BLM21B222SPT	1	230921R2		**Only <GR6P>**
AR8263-1G	L3511	CORE	BLM41PG750SN1L	1	230950R2		**Only <GR6P>**
AR8263	L4001	CORE	BLM41PG750SN1L	1	230950R2	N	
AR8263	L4002	CORE	BLM41PG750SN1L	1	230950R2	N	
AR8263	L4005	CORE	BLM41PG750SN1L	1	230950R2	N	
AR8263	L4007	CORE	BLM41PG750SN1L	1	230950R2	N	
AR8263	L4008	CORE	BLM41PG750SN1L	1	230950R2	N	
AR8263	L4009	CORE	BLM41PG750SN1L	1	230950R2	N	
AR8263	L4010	CORE	BLM41PG750SN1L	1	230950R2	N	
AR8263	L4011	CORE	BLM41PG750SN1L	1	230950R2	N	
AR8263	L4301	CORE	BLM41PG750SN1L	1	230950R2	N	
AR8263	L4302	CORE	BLM41PG750SN1L	1	230950R2	N	
AR8263	L4303	CORE	BLM41PG750SN1L	1	230950R2	N	
AR8263	L4401	CORE	BLM41PG750SN1L	1	230950R2	N	
AR8263	L4402	CORE	BLM41PG750SN1L	1	230950R2	N	
AR8263	L4403	CORE	BLM41PG750SN1L	1	230950R2	N	
AR8263	L4501	CORE	BLM41PG750SN1L	1	230950R2	N	
AR8263	L4502	CORE	BLM41PG750SN1L	1	230950R2	N	
AR8263	L4503	CORE	BLM41PG750SN1L	1	230950R2	N	
AR8263	L4601	CORE	BLM41PG750SN1L	1	230950R2	N	
AR8263	L4602	CORE	BLM41PG750SN1L	1	230950R2	N	
AR8263	L4603	CORE	BLM41PG750SN1L	1	230950R2	N	
AR8263	P1302B	PLUG	SM20B-SURS-TF	1	25056401R2	N	
AR8263	P2003B	PLUG	SM20B-SURS-TF	1	25056401R2	N	
AR8263	P2004B	PLUG	SM16B-SURS-TF	1	25056399R2	N	
AR8263-1B	P3002B	PLUG	SM11B-SRSS-TB	1	25056388R2	N	**<DC1N> <WT3P> GK3P>**
AR8263-1E	P3002B	PLUG	SM11B-SRSS-TB	1	25056388R2		**<PP2P>**

AR8263-1G	P3503	PLUG(B to B)	IMSA-9850B-22Y900	1	25056206R2		**Only <GR6P>**
AR8263-1G	P3506	SOCKET	NSCT-9P2277	1	25052379		**Only <GR6P>**
AR8263	P4003A	PLUG	NPLG-4P930	1	25055977R2	N	
AR8263	P4005A	PLUG	NPLG-5P220	1	25055236		
AR8263	P4007	PLUG	NPLG-6P1103	1	25056164R2	N	
AR8263	P4008A	PLUG	NPLG-5P931	1	25055978R2		
AR8263	P4011	BUS BAR	BBL40	1	27141867		
AR8263	P4012	BUS BAR	BBL15	1	27141869		
AR8263	P4202A	PLUG	SM15B-SRSS-TB	1	25056392R2	N	
AR8263	P4203A	PLUG	SM14B-SRSS-TB	1	25056391R2	N	
AR8263-1E	P4204A	PLUG	NPLG-10P936	1	25055983R2		**Only <PP2P>**
AR8263	P4950A	PLUG	NPLG-7P933	1	25055980R2		
AR8263	P9102B	PLUG	NPLG-8P934	1	25055981R2		
AR8263-1G	Q3508	IC	LM1117MPX-ADJ	1	22241648R2		**Only <DC1N>**
AR8263-1G	Q3509	IC	MPD4721GS	1	22241537R2		**Only <DC1N>**
AR8263	Q4005	IC	CY7C1019BV33-15VCT	1	22241612R2		
AR8263	Q4005 or	IC	CY7C1019CV33-15VCT	(1)	22241887R2		
AR8263	Q4006	IC	CY7C1019BV33-15VCT	1	22241612R2		
AR8263	Q4006 or	IC	CY7C1019CV33-15VCT	(1)	22241887R2		
AR8263	Q4007	IC	74HCT00AF(TC74HCT00AF)	1	222740007R2TO		
AR8263	Q4008	IC	TC7WH241FK	1	22242075R2TO	N	
AR8263	Q4009	IC (REGULATOR)	NJM2391DL1-285	1	22278028DR2JR		
AR8263	Q4010	IC	TC74VHC74FT	1	22274074ER2TO		
AR8263	Q4012	IC	MB86344BPFV	1	22241847R3		
AR8263	Q4013	IC	TC7WT74FU	1	22242081R2TO	N	
AR8263	Q4014	IC	NJU6321PE	1	22241288R2		
AR8263	Q4015	IC	TC7WH241FK	1	22242075R2TO	N	
AR8263	Q4016	IC	NJU6321PE	1	22241288R2		
AR8263	Q4017	IC	TC9246F	1	22240928R2		
AR8263	Q4018	IC	TC7WH241FK	1	22242075R2TO	N	
AR8263	Q4019	IC	TC7WH241FK	1	22242075R2TO	N	
AR8263	Q4020	IC	TC7SZ125FU	1	22241895R2		
AR8263-1B	Q4021	IC	TC7SZ125FU	1	22241895R2		**<DC1N> <WT3P> GK3P>**
AR8263-1E	Q4021	IC	TC7SZ125FU	1	22241895R2		**<PP2P>**
AR8263-1B	Q4022	IC	TC7SZ125FU	1	22241895R2		**<DC1N> <WT3P> GK3P>**
AR8263-1E	Q4022	IC	TC7SZ125FU	1	22241895R2		**<PP2P>**
AR8263-1E	Q4051	TR	RN1407	1	2216260R2		**<PP2P>**
AR8263-1E	Q4052	TR	RN2405	1	2214560R2		**<PP2P>**
AR8263	Q4207	TR	RN1404	1	2214490R2		
AR8263	Q4208	TR	RN1404	1	2214490R2		
AR8263	Q4213	TR	RN1404	1	2214490R2		
AR8263	Q4301	IC	NJM2370U05	1	22241289R2		
AR8263	Q4302	IC	WM8719EDS	1	22242068R2	N	

AR8263	Q4321	IC	NJM4580M-D	1	22241448R2		
AR8263	Q4322	IC	NJM4580M-D	1	22241448R2		
AR8263	Q4323	IC	NJM4580M-D	1	22241448R2		
AR8263	Q4324	IC	NJM4580M-D	1	22241448R2		
AR8263	Q4401	IC	NJM2370U05	1	22241289R2		
AR8263	Q4402	IC	WM8719EDS	1	22242068R2	N	
AR8263	Q4421	IC	NJM4580M-D	1	22241448R2		
AR8263	Q4422	IC	NJM4580M-D	1	22241448R2		
AR8263	Q4423	IC	NJM4580M-D	1	22241448R2		
AR8263	Q4424	IC	NJM4580M-D	1	22241448R2		
AR8263	Q4501	IC	NJM2370U05	1	22241289R2		
AR8263	Q4502	IC	WM8719EDS	1	22242068R2	N	
AR8263	Q4521	IC	NJM4580M-D	1	22241448R2		
AR8263	Q4522	IC	NJM4580M-D	1	22241448R2		
AR8263	Q4523	IC	NJM4580M-D	1	22241448R2		
AR8263	Q4524	IC	NJM4580M-D	1	22241448R2		
AR8263	Q4601	IC	NJM2370U05	1	22241289R2		
AR8263	Q4602	IC	WM8719EDS	1	22242068R2	N	
AR8263	Q4621	IC	NJM4580M-D	1	22241448R2		
AR8263	Q4622	IC	NJM4580M-D	1	22241448R2		
AR8263	Q4623	IC	NJM4580M-D	1	22241448R2		
AR8263	Q4624	IC	NJM4580M-D	1	22241448R2		
AR8263-1G	R3511	C-R NET	RM7LJ220X04	1	43484722004R2		**Only <DC1N>**
AR8263-1G	R3512	C-R NET	RM7LJ220X04	1	43484722004R2		**Only <DC1N>**
AR8263-1G	R3552	C-CARBON R	RN72K1J-121FE	1	435031212R1		**Only <DC1N>**
AR8263-1G	R3553	C-CARBON R	RN72K1J-201FE	1	435032012R1		**Only <DC1N>**
AR8263-1G	R3567	C-CARBON R	RN72K1J-000JE	1	435030004R1		**Only <DC1N>**
AR8263	R4001	C-CARBON R	RN72K1J-470JE	1	435034704R1		
AR8263	R4004	C-CARBON R	RN72K1J-470JE	1	435034704R1		
AR8263-1B	R4008	C-CARBON R	RN72K1J-000JE	1	435030004R1		**<DC1N>**
AR8263-1E	R4008	C-CARBON R	RN72K1J-000JE	1	435030004R1		**<PP2P>**
AR8263	R4012	C-CARBON R	RN72K1J-000JE	1	435030004R1		
AR8263	R4014	C-CARBON R	RN72K1J-000JE	1	435030004R1		
AR8263	R4015	C-CARBON R	RN72K1J-000JE	1	435030004R1		
AR8263	R4016	C-CARBON R	RN72K1J-000JE	1	435030004R1		
AR8263	R4017	C-CARBON R	RN72K1J-000JE	1	435030004R1		
AR8263	R4018	C-CARBON R	RN72K1J-000JE	1	435030004R1		
AR8263	R4019	C-CARBON R	RN72K1J-000JE	1	435030004R1		
AR8263	R4020	C-CARBON R	RN72K1J-000JE	1	435030004R1		
AR8263	R4021	C-CARBON R	RN72K1J-000JE	1	435030004R1		
AR8263	R4022	C-CARBON R	RN72K1J-102JE	1	435031024R1		
AR8263	R4023	C-CARBON R	RN72K1J-102JE	1	435031024R1		
AR8263	R4024	C-CARBON R	RN72K1J-102JE	1	435031024R1		
AR8263	R4025	C-CARBON R	RN72K1J-000JE	1	435030004R1		
AR8263	R4026	C-CARBON R	RN72K1J-000JE	1	435030004R1		

AR8263	R4027	C-CARBON R	RN72K1J-000JE	1	435030004R1	
AR8263	R4028	C-CARBON R	RN72K1J-000JE	1	435030004R1	
AR8263	R4029	C-CARBON R	RN72K1J-000JE	1	435030004R1	
AR8263	R4030	C-CARBON R	RN72K1J-000JE	1	435030004R1	
AR8263	R4031	C-CARBON R	RN72K1J-000JE	1	435030004R1	
AR8263	R4032	C-CARBON R	RN72K1J-000JE	1	435030004R1	
AR8263-1B	R4033	C-CARBON R	RN72K1J-470JE	1	435034704R1	**<DC1N>**
AR8263-1E	R4033	C-CARBON R	RN72K1J-470JE	1	435034704R1	**<PP2P>**
AR8263	R4036	C-CARBON R	RN72K1J-470JE	1	435034704R1	
AR8263	R4037	C-CARBON R	RN72K1J-000JE	1	435030004R1	
AR8263	R4038	C-CARBON R	RN72K1J-000JE	1	435030004R1	
AR8263	R4039	C-CARBON R	RN72K1J-000JE	1	435030004R1	
AR8263	R4040	C-CARBON R	RN72K1J-000JE	1	435030004R1	
AR8263	R4041	C-CARBON R	RN72K1J-000JE	1	435030004R1	
AR8263	R4042	C-CARBON R	RN72K1J-000JE	1	435030004R1	
AR8263	R4043	C-CARBON R	RN72K1J-000JE	1	435030004R1	
AR8263	R4050	METAL R	RNU1/2WCJ-0.82	1	453538294T	
AR8263	R4051	C-CARBON R	RN72K1J-560JE	1	435035604R1	
AR8263	R4052	C-CARBON R	RN72K1J-560JE	1	435035604R1	
AR8263	R4053	C-CARBON R	RN72K1J-560JE	1	435035604R1	
AR8263	R4054	C-CARBON R	RN72K1J-560JE	1	435035604R1	
AR8263	R4055	C-CARBON R	RN72K1J-560JE	1	435035604R1	
AR8263	R4056	C-CARBON R	RN72K1J-102JE	1	435031024R1	
AR8263	R4058	C-CARBON R	RN72K1J-560JE	1	435035604R1	
AR8263	R4059	C-CARBON R	RN72K1J-560JE	1	435035604R1	
AR8263	R4060	C-CARBON R	RN72K1J-560JE	1	435035604R1	
AR8263	R4061	C-CARBON R	RN72K1J-560JE	1	435035604R1	
AR8263	R4062	C-CARBON R	RN72K1J-560JE	1	435035604R1	
AR8263	R4063	C-CARBON R	RN72K1J-560JE	1	435035604R1	
AR8263	R4064	C-CARBON R	RN72K1J-472JE	1	435034724R1	
AR8263	R4065	C-CARBON R	RN72K1J-102JE	1	435031024R1	
AR8263	R4066	C-CARBON R	RN72K1J-102JE	1	435031024R1	
AR8263	R4067	C-CARBON R	RN72K1J-560JE	1	435035604R1	
AR8263	R4071	C-CARBON R	RN72K1J-560JE	1	435035604R1	
AR8263	R4072	C-CARBON R	RN72K1J-102JE	1	435031024R1	
AR8263	R4073	C-CARBON R	RN72K1J-560JE	1	435035604R1	
AR8263	R4074	C-CARBON R	RN72K1J-560JE	1	435035604R1	
AR8263	R4075	C-CARBON R	RN72K1J-102JE	1	435031024R1	
AR8263	R4076	C-CARBON R	RN72K1J-000JE	1	435030004R1	
AR8263	R4077	C-CARBON R	RN72K1J-102JE	1	435031024R1	
AR8263	R4078	C-CARBON R	RN72K1J-560JE	1	435035604R1	
AR8263	R4079	C-CARBON R	RN72K1J-000JE	1	435030004R1	
AR8263	R4081	C-CARBON R	RN72K1J-560JE	1	435035604R1	
AR8263	R4082	C-CARBON R	RN72K1J-560JE	1	435035604R1	
AR8263	R4083	C-CARBON R	RN72K1J-560JE	1	435035604R1	

AR8263	R4084	C-CARBON R	RN72K1J-103JE	1	435031034R1
AR8263	R4085	C-CARBON R	RN72K1J-560JE	1	435035604R1
AR8263	R4086	C-CARBON R	RN72K1J-560JE	1	435035604R1
AR8263	R4087	C-CARBON R	RN72K1J-560JE	1	435035604R1
AR8263	R4088	C-CARBON R	RN72K1J-560JE	1	435035604R1
AR8263	R4090	C-CARBON R	RN72K1J-560JE	1	435035604R1
AR8263	R4091	C-CARBON R	RN72K1J-560JE	1	435035604R1
AR8263	R4092	C-CARBON R	RN72K1J-560JE	1	435035604R1
AR8263	R4093	C-CARBON R	RN72K1J-000JE	1	435030004R1
AR8263	R4094	C-CARBON R	RN72K1J-102JE	1	435031024R1
AR8263	R4096	C-CARBON R	RN72K1J-221JE	1	435032214R1
AR8263	R4097	C-CARBON R	RN72K1J-331JE	1	435033314R1
AR8263	R4098	C-CARBON R	RN72K1J-331JE	1	435033314R1
AR8263	R4099	C-CARBON R	RN72K1J-560JE	1	435035604R1
AR8263	R4100	C-CARBON R	RN72K1J-331JE	1	435033314R1
AR8263	R4101	C-CARBON R	RN72K1J-220JE	1	435032204R1
AR8263	R4102	C-CARBON R	RN72K1J-560JE	1	435035604R1
AR8263	R4103	C-CARBON R	RN72K1J-000JE	1	435030004R1
AR8263	R4105	C-CARBON R	RN72K1J-560JE	1	435035604R1
AR8263	R4106	C-CARBON R	RN72K1J-102JE	1	435031024R1
AR8263	R4107	C-CARBON R	RN72K1J-560JE	1	435035604R1
AR8263	R4108	C-CARBON R	RN72K1J-103JE	1	435031034R1
AR8263	R4109	C-CARBON R	RN72K1J-102JE	1	435031024R1
AR8263	R4110	C-CARBON R	RN72K1J-560JE	1	435035604R1
AR8263	R4111	C-CARBON R	RN72K1J-102JE	1	435031024R1
AR8263	R4112	C-CARBON R	RN72K1J-331JE	1	435033314R1
AR8263	R4113	C-CARBON R	RN72K1J-331JE	1	435033314R1
AR8263	R4114	C-CARBON R	RN72K1J-560JE	1	435035604R1
AR8263	R4117	C-CARBON R	RN72K1J-560JE	1	435035604R1
AR8263	R4118	C-CARBON R	RN72K1J-560JE	1	435035604R1
AR8263	R4119	C-CARBON R	RN72K1J-331JE	1	435033314R1
AR8263	R4120	C-CARBON R	RN72K1J-331JE	1	435033314R1
AR8263	R4121	C-CARBON R	RN72K1J-560JE	1	435035604R1
AR8263	R4122	C-CARBON R	RN72K1J-331JE	1	435033314R1
AR8263	R4123	C-CARBON R	RN72K1J-331JE	1	435033314R1
AR8263	R4124	C-CARBON R	RN72K1J-560JE	1	435035604R1
AR8263	R4126	C-CARBON R	RN72K1J-560JE	1	435035604R1
AR8263	R4127	C-CARBON R	RN72K1J-560JE	1	435035604R1
AR8263	R4128	C-CARBON R	RN72K1J-102JE	1	435031024R1
AR8263	R4129	C-CARBON R	RN72K1J-560JE	1	435035604R1
AR8263	R4130	C-CARBON R	RN72K1J-331JE	1	435033314R1
AR8263	R4132	C-CARBON R	RN72K1J-100JE	1	435031004R1
AR8263	R4133	C-CARBON R	RN72K1J-000JE	1	435030004R1
AR8263	R4134	C-CARBON R	RN72K1J-220JE	1	435032204R1
AR8263	R4135	C-CARBON R	RN72K1J-152JE	1	435031524R1

AR8263	R4136	C-CARBON R	RN72K1J-102JE	1	435031024R1	
AR8263	R4137	C-CARBON R	RN72K1J-562JE	1	435035624R1	
AR8263	R4138	C-CARBON R	RN72K1J-102JE	1	435031024R1	
AR8263	R4139	C-CARBON R	RN72K1J-000JE	1	435030004R1	
AR8263	R4140	C-CARBON R	RN72K1J-101JE	1	435031014R1	
AR8263	R4141	C-CARBON R	RN72K1J-103JE	1	435031034R1	
AR8263	R4142	C-CARBON R	RN72K1J-102JE	1	435031024R1	
AR8263	R4143	C-CARBON R	RN72K1J-102JE	1	435031024R1	
AR8263	R4144	C-CARBON R	RN72K1J-102JE	1	435031024R1	
AR8263	R4145	C-CARBON R	RN72K1J-100JE	1	435031004R1	
AR8263	R4147	C-CARBON R	RN72K1J-000JE	1	435030004R1	
AR8263	R4150	EMIFIL	BK1608LL241-T	1	230959R1	
AR8263	R4151	C-CARBON R	RN72K1J-000JE	1	435030004R1	
AR8263	R4153	C-CARBON R	RN72K1J-470JE	1	435034704R1	
AR8263-1B	R4154	C-CARBON R	RN72K1J-470JE	1	435034704R1	**<DC1N>**
AR8263-1E	R4154	C-CARBON R	RN72K1J-470JE	1	435034704R1	**<PP2P>**
AR8263-1B	R4155	C-CARBON R	RN72K1J-470JE	1	435034704R1	**<DC1N>**
AR8263-1E	R4155	C-CARBON R	RN72K1J-470JE	1	435034704R1	**<PP2P>**
AR8263-1B	R4156	C-CARBON R	RN72K1J-470JE	1	435034704R1	**<DC1N>**
AR8263-1E	R4156	C-CARBON R	RN72K1J-470JE	1	435034704R1	**<PP2P>**
AR8263	R4206	C-CARBON R	RN72K1J-470JE	1	435034704R1	
AR8263	R4207	C-CARBON R	RN72K1J-470JE	1	435034704R1	
AR8263	R4208	C-CARBON R	RN72K1J-470JE	1	435034704R1	
AR8263	R4209	C-CARBON R	RN72K1J-470JE	1	435034704R1	
AR8263	R4210	C-CARBON R	RN72K1J-470JE	1	435034704R1	
AR8263	R4211	C-CARBON R	RN72K1J-470JE	1	435034704R1	
AR8263	R4212	C-CARBON R	RN72K1J-470JE	1	435034704R1	
AR8263	R4213	C-CARBON R	RN72K1J-470JE	1	435034704R1	
AR8263	R4214	C-CARBON R	RN72K1J-470JE	1	435034704R1	
AR8263	R4215	C-CARBON R	RN72K1J-470JE	1	435034704R1	
AR8263	R4216	C-CARBON R	RN72K1J-470JE	1	435034704R1	
AR8263	R4217	C-CARBON R	RN72K1J-470JE	1	435034704R1	
AR8263	R4218	C-CARBON R	RN72K1J-470JE	1	435034704R1	
AR8263	R4220	C-CARBON R	RN72K1J-000JE	1	435030004R1	
AR8263	R4221	C-CARBON R	RN72K1J-000JE	1	435030004R1	
AR8263	R4223	C-CARBON R	RN72K1J-470JE	1	435034704R1	
AR8263	R4224	C-CARBON R	RN72K1J-470JE	1	435034704R1	
AR8263	R4225	C-CARBON R	RN72K1J-470JE	1	435034704R1	
AR8263	R4226	C-CARBON R	RN72K1J-470JE	1	435034704R1	
AR8263	R4227	C-CARBON R	RN72K1J-470JE	1	435034704R1	
AR8263	R4228	C-CARBON R	RN72K1J-470JE	1	435034704R1	
AR8263	R4238	C-CARBON R	RN72K1J-470JE	1	435034704R1	
AR8263	R4239	C-CARBON R	RN72K1J-470JE	1	435034704R1	
AR8263	R4247	C-CARBON R	RN72K1J-103JE	1	435031034R1	
AR8263	R4250	C-CARBON R	RN72K1J-472JE	1	435034724R1	

AR8263	R4301	C-CARBON R	RN72K1J-102JE	1	435031024R1
AR8263	R4303	C-CARBON R	RN72K1J-470JE	1	435034704R1
AR8263	R4304	C-CARBON R	RN72K1J-470JE	1	435034704R1
AR8263	R4305	C-CARBON R	RN72K1J-470JE	1	435034704R1
AR8263	R4306	C-CARBON R	RN72K1J-470JE	1	435034704R1
AR8263	R4307	C-CARBON R	RN72K1J-470JE	1	435034704R1
AR8263	R4308	C-CARBON R	RN72K1J-470JE	1	435034704R1
AR8263	R4309	C-CARBON R	RN72K1J-470JE	1	435034704R1
AR8263	R4310	C-CARBON R	RN72K1J-470JE	1	435034704R1
AR8263	R4311	C-CARBON R	RN72K1J-470JE	1	435034704R1
AR8263	R4312	C-CARBON R	RN72K1J-152JE	1	435031524R1
AR8263	R4313	C-CARBON R	RN72K1J-470JE	1	435034704R1
AR8263	R4316	C-CARBON R	RN72K1J-000JE	1	435030004R1
AR8263	R4321	C-CARBON R	RN72K1J-272JE	1	435032724R1
AR8263	R4322	C-CARBON R	RN72K1J-272JE	1	435032724R1
AR8263	R4323	C-CARBON R	RN72K1J-272JE	1	435032724R1
AR8263	R4324	C-CARBON R	RN72K1J-272JE	1	435032724R1
AR8263	R4325	C-CARBON R	RN72K1J-152JE	1	435031524R1
AR8263	R4326	C-CARBON R	RN72K1J-152JE	1	435031524R1
AR8263	R4327	C-CARBON R	RN72K1J-152JE	1	435031524R1
AR8263	R4328	C-CARBON R	RN72K1J-152JE	1	435031524R1
AR8263	R4329	C-CARBON R	RN72K1J-272JE	1	435032724R1
AR8263	R4330	C-CARBON R	RN72K1J-272JE	1	435032724R1
AR8263	R4331	C-CARBON R	RN72K1J-272JE	1	435032724R1
AR8263	R4332	C-CARBON R	RN72K1J-272JE	1	435032724R1
AR8263	R4333	C-CARBON R	RN72K1J-220JE	1	435032204R1
AR8263	R4334	C-CARBON R	RN72K1J-220JE	1	435032204R1
AR8263	R4335	C-CARBON R	RN72K1J-220JE	1	435032204R1
AR8263	R4336	C-CARBON R	RN72K1J-220JE	1	435032204R1
AR8263	R4337	C-CARBON R	RN72K1J-220JE	1	435032204R1
AR8263	R4338	C-CARBON R	RN72K1J-220JE	1	435032204R1
AR8263	R4339	C-CARBON R	RN72K1J-220JE	1	435032204R1
AR8263	R4340	C-CARBON R	RN72K1J-220JE	1	435032204R1
AR8263	R4341	C-CARBON R	RN72K1J-822JE	1	435038224R1
AR8263	R4342	C-CARBON R	RN72K1J-822JE	1	435038224R1
AR8263	R4343	C-CARBON R	RN72K1J-182JE	1	435031824R1
AR8263	R4344	C-CARBON R	RN72K1J-182JE	1	435031824R1
AR8263	R4345	C-CARBON R	RN72K1J-103JE	1	435031034R1
AR8263	R4346	C-CARBON R	RN72K1J-103JE	1	435031034R1
AR8263	R4347	C-CARBON R	RN72K1J-152JE	1	435031524R1
AR8263	R4348	C-CARBON R	RN72K1J-152JE	1	435031524R1
AR8263	R4349	C-CARBON R	RN72K1J-223JE	1	435032234R1
AR8263	R4350	C-CARBON R	RN72K1J-223JE	1	435032234R1
AR8263	R4351	C-CARBON R	RN72K1J-223JE	1	435032234R1
AR8263	R4352	C-CARBON R	RN72K1J-223JE	1	435032234R1

AR8263	R4353	C-CARBON R	RN72K1J-223JE	1	435032234R1
AR8263	R4354	C-CARBON R	RN72K1J-223JE	1	435032234R1
AR8263	R4355	C-CARBON R	RN72K1J-223JE	1	435032234R1
AR8263	R4356	C-CARBON R	RN72K1J-223JE	1	435032234R1
AR8263	R4357	C-CARBON R	RN72K1J-152JE	1	435031524R1
AR8263	R4358	C-CARBON R	RN72K1J-152JE	1	435031524R1
AR8263	R4359	C-CARBON R	RN72K1J-152JE	1	435031524R1
AR8263	R4360	C-CARBON R	RN72K1J-152JE	1	435031524R1
AR8263	R4369	C-CARBON R	RN72K1J-102JE	1	435031024R1
AR8263	R4370	C-CARBON R	RN72K1J-102JE	1	435031024R1
AR8263	R4371	C-CARBON R	RN72K1J-183JE	1	435031834R1
AR8263	R4372	C-CARBON R	RN72K1J-183JE	1	435031834R1
AR8263	R4373	C-CARBON R	RN72K1J-682JE	1	435036824R1
AR8263	R4374	C-CARBON R	RN72K1J-682JE	1	435036824R1
AR8263	R4401	C-CARBON R	RN72K1J-102JE	1	435031024R1
AR8263	R4403	C-CARBON R	RN72K1J-470JE	1	435034704R1
AR8263	R4404	C-CARBON R	RN72K1J-470JE	1	435034704R1
AR8263	R4405	C-CARBON R	RN72K1J-470JE	1	435034704R1
AR8263	R4406	C-CARBON R	RN72K1J-470JE	1	435034704R1
AR8263	R4407	C-CARBON R	RN72K1J-470JE	1	435034704R1
AR8263	R4408	C-CARBON R	RN72K1J-470JE	1	435034704R1
AR8263	R4409	C-CARBON R	RN72K1J-470JE	1	435034704R1
AR8263	R4410	C-CARBON R	RN72K1J-470JE	1	435034704R1
AR8263	R4411	C-CARBON R	RN72K1J-470JE	1	435034704R1
AR8263	R4412	C-CARBON R	RN72K1J-152JE	1	435031524R1
AR8263	R4413	C-CARBON R	RN72K1J-470JE	1	435034704R1
AR8263	R4416	C-CARBON R	RN72K1J-000JE	1	435030004R1
AR8263	R4421	C-CARBON R	RN72K1J-272JE	1	435032724R1
AR8263	R4422	C-CARBON R	RN72K1J-272JE	1	435032724R1
AR8263	R4423	C-CARBON R	RN72K1J-272JE	1	435032724R1
AR8263	R4424	C-CARBON R	RN72K1J-272JE	1	435032724R1
AR8263	R4425	C-CARBON R	RN72K1J-152JE	1	435031524R1
AR8263	R4426	C-CARBON R	RN72K1J-152JE	1	435031524R1
AR8263	R4427	C-CARBON R	RN72K1J-152JE	1	435031524R1
AR8263	R4428	C-CARBON R	RN72K1J-152JE	1	435031524R1
AR8263	R4429	C-CARBON R	RN72K1J-272JE	1	435032724R1
AR8263	R4430	C-CARBON R	RN72K1J-272JE	1	435032724R1
AR8263	R4431	C-CARBON R	RN72K1J-272JE	1	435032724R1
AR8263	R4432	C-CARBON R	RN72K1J-272JE	1	435032724R1
AR8263	R4433	C-CARBON R	RN72K1J-220JE	1	435032204R1
AR8263	R4434	C-CARBON R	RN72K1J-220JE	1	435032204R1
AR8263	R4435	C-CARBON R	RN72K1J-220JE	1	435032204R1
AR8263	R4436	C-CARBON R	RN72K1J-220JE	1	435032204R1
AR8263	R4437	C-CARBON R	RN72K1J-220JE	1	435032204R1
AR8263	R4438	C-CARBON R	RN72K1J-220JE	1	435032204R1

AR8263	R4439	C-CARBON R	RN72K1J-220JE	1	435032204R1
AR8263	R4440	C-CARBON R	RN72K1J-220JE	1	435032204R1
AR8263	R4441	C-CARBON R	RN72K1J-822JE	1	435038224R1
AR8263	R4442	C-CARBON R	RN72K1J-822JE	1	435038224R1
AR8263	R4443	C-CARBON R	RN72K1J-182JE	1	435031824R1
AR8263	R4444	C-CARBON R	RN72K1J-182JE	1	435031824R1
AR8263	R4445	C-CARBON R	RN72K1J-103JE	1	435031034R1
AR8263	R4446	C-CARBON R	RN72K1J-103JE	1	435031034R1
AR8263	R4447	C-CARBON R	RN72K1J-152JE	1	435031524R1
AR8263	R4448	C-CARBON R	RN72K1J-152JE	1	435031524R1
AR8263	R4449	C-CARBON R	RN72K1J-223JE	1	435032234R1
AR8263	R4450	C-CARBON R	RN72K1J-223JE	1	435032234R1
AR8263	R4451	C-CARBON R	RN72K1J-223JE	1	435032234R1
AR8263	R4452	C-CARBON R	RN72K1J-223JE	1	435032234R1
AR8263	R4453	C-CARBON R	RN72K1J-223JE	1	435032234R1
AR8263	R4454	C-CARBON R	RN72K1J-223JE	1	435032234R1
AR8263	R4455	C-CARBON R	RN72K1J-223JE	1	435032234R1
AR8263	R4456	C-CARBON R	RN72K1J-223JE	1	435032234R1
AR8263	R4457	C-CARBON R	RN72K1J-152JE	1	435031524R1
AR8263	R4458	C-CARBON R	RN72K1J-152JE	1	435031524R1
AR8263	R4459	C-CARBON R	RN72K1J-152JE	1	435031524R1
AR8263	R4460	C-CARBON R	RN72K1J-152JE	1	435031524R1
AR8263	R4469	C-CARBON R	RN72K1J-102JE	1	435031024R1
AR8263	R4470	C-CARBON R	RN72K1J-102JE	1	435031024R1
AR8263	R4471	C-CARBON R	RN72K1J-183JE	1	435031834R1
AR8263	R4472	C-CARBON R	RN72K1J-183JE	1	435031834R1
AR8263	R4473	C-CARBON R	RN72K1J-682JE	1	435036824R1
AR8263	R4474	C-CARBON R	RN72K1J-682JE	1	435036824R1
AR8263	R4501	C-CARBON R	RN72K1J-102JE	1	435031024R1
AR8263	R4503	C-CARBON R	RN72K1J-470JE	1	435034704R1
AR8263	R4504	C-CARBON R	RN72K1J-470JE	1	435034704R1
AR8263	R4505	C-CARBON R	RN72K1J-470JE	1	435034704R1
AR8263	R4506	C-CARBON R	RN72K1J-470JE	1	435034704R1
AR8263	R4507	C-CARBON R	RN72K1J-470JE	1	435034704R1
AR8263	R4508	C-CARBON R	RN72K1J-470JE	1	435034704R1
AR8263	R4509	C-CARBON R	RN72K1J-470JE	1	435034704R1
AR8263	R4510	C-CARBON R	RN72K1J-470JE	1	435034704R1
AR8263	R4511	C-CARBON R	RN72K1J-470JE	1	435034704R1
AR8263	R4512	C-CARBON R	RN72K1J-152JE	1	435031524R1
AR8263	R4513	C-CARBON R	RN72K1J-470JE	1	435034704R1
AR8263	R4516	C-CARBON R	RN72K1J-000JE	1	435030004R1
AR8263	R4521	C-CARBON R	RN72K1J-272JE	1	435032724R1
AR8263	R4522	C-CARBON R	RN72K1J-272JE	1	435032724R1
AR8263	R4523	C-CARBON R	RN72K1J-272JE	1	435032724R1
AR8263	R4524	C-CARBON R	RN72K1J-272JE	1	435032724R1

AR8263	R4525	C-CARBON R	RN72K1J-152JE	1	435031524R1
AR8263	R4526	C-CARBON R	RN72K1J-152JE	1	435031524R1
AR8263	R4527	C-CARBON R	RN72K1J-152JE	1	435031524R1
AR8263	R4528	C-CARBON R	RN72K1J-152JE	1	435031524R1
AR8263	R4529	C-CARBON R	RN72K1J-272JE	1	435032724R1
AR8263	R4530	C-CARBON R	RN72K1J-272JE	1	435032724R1
AR8263	R4531	C-CARBON R	RN72K1J-272JE	1	435032724R1
AR8263	R4532	C-CARBON R	RN72K1J-272JE	1	435032724R1
AR8263	R4533	C-CARBON R	RN72K1J-220JE	1	435032204R1
AR8263	R4534	C-CARBON R	RN72K1J-220JE	1	435032204R1
AR8263	R4535	C-CARBON R	RN72K1J-220JE	1	435032204R1
AR8263	R4536	C-CARBON R	RN72K1J-220JE	1	435032204R1
AR8263	R4537	C-CARBON R	RN72K1J-220JE	1	435032204R1
AR8263	R4538	C-CARBON R	RN72K1J-220JE	1	435032204R1
AR8263	R4539	C-CARBON R	RN72K1J-220JE	1	435032204R1
AR8263	R4540	C-CARBON R	RN72K1J-220JE	1	435032204R1
AR8263	R4541	C-CARBON R	RN72K1J-822JE	1	435038224R1
AR8263	R4542	C-CARBON R	RN72K1J-822JE	1	435038224R1
AR8263	R4543	C-CARBON R	RN72K1J-182JE	1	435031824R1
AR8263	R4544	C-CARBON R	RN72K1J-182JE	1	435031824R1
AR8263	R4545	C-CARBON R	RN72K1J-103JE	1	435031034R1
AR8263	R4546	C-CARBON R	RN72K1J-103JE	1	435031034R1
AR8263	R4547	C-CARBON R	RN72K1J-152JE	1	435031524R1
AR8263	R4548	C-CARBON R	RN72K1J-152JE	1	435031524R1
AR8263	R4549	C-CARBON R	RN72K1J-223JE	1	435032234R1
AR8263	R4550	C-CARBON R	RN72K1J-223JE	1	435032234R1
AR8263	R4551	C-CARBON R	RN72K1J-223JE	1	435032234R1
AR8263	R4552	C-CARBON R	RN72K1J-223JE	1	435032234R1
AR8263	R4553	C-CARBON R	RN72K1J-223JE	1	435032234R1
AR8263	R4554	C-CARBON R	RN72K1J-223JE	1	435032234R1
AR8263	R4555	C-CARBON R	RN72K1J-223JE	1	435032234R1
AR8263	R4556	C-CARBON R	RN72K1J-223JE	1	435032234R1
AR8263	R4557	C-CARBON R	RN72K1J-152JE	1	435031524R1
AR8263	R4558	C-CARBON R	RN72K1J-152JE	1	435031524R1
AR8263	R4559	C-CARBON R	RN72K1J-152JE	1	435031524R1
AR8263	R4560	C-CARBON R	RN72K1J-152JE	1	435031524R1
AR8263	R4569	C-CARBON R	RN72K1J-102JE	1	435031024R1
AR8263	R4570	C-CARBON R	RN72K1J-102JE	1	435031024R1
AR8263	R4571	C-CARBON R	RN72K1J-183JE	1	435031834R1
AR8263	R4572	C-CARBON R	RN72K1J-183JE	1	435031834R1
AR8263	R4573	C-CARBON R	RN72K1J-682JE	1	435036824R1
AR8263	R4574	C-CARBON R	RN72K1J-682JE	1	435036824R1
AR8263	R4601	C-CARBON R	RN72K1J-102JE	1	435031024R1
AR8263	R4603	C-CARBON R	RN72K1J-470JE	1	435034704R1
AR8263	R4604	C-CARBON R	RN72K1J-470JE	1	435034704R1

AR8263	R4605	C-CARBON R	RN72K1J-470JE	1	435034704R1
AR8263	R4606	C-CARBON R	RN72K1J-470JE	1	435034704R1
AR8263	R4607	C-CARBON R	RN72K1J-470JE	1	435034704R1
AR8263	R4608	C-CARBON R	RN72K1J-470JE	1	435034704R1
AR8263	R4609	C-CARBON R	RN72K1J-470JE	1	435034704R1
AR8263	R4610	C-CARBON R	RN72K1J-470JE	1	435034704R1
AR8263	R4611	C-CARBON R	RN72K1J-470JE	1	435034704R1
AR8263	R4612	C-CARBON R	RN72K1J-152JE	1	435031524R1
AR8263	R4613	C-CARBON R	RN72K1J-470JE	1	435034704R1
AR8263	R4616	C-CARBON R	RN72K1J-000JE	1	435030004R1
AR8263	R4621	C-CARBON R	RN72K1J-272JE	1	435032724R1
AR8263	R4622	C-CARBON R	RN72K1J-272JE	1	435032724R1
AR8263	R4623	C-CARBON R	RN72K1J-272JE	1	435032724R1
AR8263	R4624	C-CARBON R	RN72K1J-272JE	1	435032724R1
AR8263	R4625	C-CARBON R	RN72K1J-152JE	1	435031524R1
AR8263	R4626	C-CARBON R	RN72K1J-152JE	1	435031524R1
AR8263	R4627	C-CARBON R	RN72K1J-152JE	1	435031524R1
AR8263	R4628	C-CARBON R	RN72K1J-152JE	1	435031524R1
AR8263	R4629	C-CARBON R	RN72K1J-272JE	1	435032724R1
AR8263	R4630	C-CARBON R	RN72K1J-272JE	1	435032724R1
AR8263	R4631	C-CARBON R	RN72K1J-272JE	1	435032724R1
AR8263	R4632	C-CARBON R	RN72K1J-272JE	1	435032724R1
AR8263	R4633	C-CARBON R	RN72K1J-220JE	1	435032204R1
AR8263	R4634	C-CARBON R	RN72K1J-220JE	1	435032204R1
AR8263	R4635	C-CARBON R	RN72K1J-220JE	1	435032204R1
AR8263	R4636	C-CARBON R	RN72K1J-220JE	1	435032204R1
AR8263	R4637	C-CARBON R	RN72K1J-220JE	1	435032204R1
AR8263	R4638	C-CARBON R	RN72K1J-220JE	1	435032204R1
AR8263	R4639	C-CARBON R	RN72K1J-220JE	1	435032204R1
AR8263	R4640	C-CARBON R	RN72K1J-220JE	1	435032204R1
AR8263	R4641	C-CARBON R	RN72K1J-822JE	1	435038224R1
AR8263	R4642	C-CARBON R	RN72K1J-822JE	1	435038224R1
AR8263	R4643	C-CARBON R	RN72K1J-182JE	1	435031824R1
AR8263	R4644	C-CARBON R	RN72K1J-182JE	1	435031824R1
AR8263	R4645	C-CARBON R	RN72K1J-103JE	1	435031034R1
AR8263	R4646	C-CARBON R	RN72K1J-103JE	1	435031034R1
AR8263	R4647	C-CARBON R	RN72K1J-152JE	1	435031524R1
AR8263	R4648	C-CARBON R	RN72K1J-152JE	1	435031524R1
AR8263	R4649	C-CARBON R	RN72K1J-223JE	1	435032234R1
AR8263	R4650	C-CARBON R	RN72K1J-223JE	1	435032234R1
AR8263	R4651	C-CARBON R	RN72K1J-223JE	1	435032234R1
AR8263	R4652	C-CARBON R	RN72K1J-223JE	1	435032234R1
AR8263	R4653	C-CARBON R	RN72K1J-223JE	1	435032234R1
AR8263	R4654	C-CARBON R	RN72K1J-223JE	1	435032234R1
AR8263	R4655	C-CARBON R	RN72K1J-223JE	1	435032234R1

AR8263	R4656	C-CARBON R	RN72K1J-223JE	1	435032234R1	
AR8263	R4657	C-CARBON R	RN72K1J-152JE	1	435031524R1	
AR8263	R4658	C-CARBON R	RN72K1J-152JE	1	435031524R1	
AR8263	R4659	C-CARBON R	RN72K1J-152JE	1	435031524R1	
AR8263	R4660	C-CARBON R	RN72K1J-152JE	1	435031524R1	
AR8263	R4669	C-CARBON R	RN72K1J-102JE	1	435031024R1	
AR8263	R4670	C-CARBON R	RN72K1J-102JE	1	435031024R1	
AR8263	R4671	C-CARBON R	RN72K1J-183JE	1	435031834R1	
AR8263	R4672	C-CARBON R	RN72K1J-183JE	1	435031834R1	
AR8263	R4673	C-CARBON R	RN72K1J-682JE	1	435036824R1	
AR8263	R4674	C-CARBON R	RN72K1J-682JE	1	435036824R1	
AR8263	X4001	CRYSTAL	XTL-13.5M	1	3010368R2	
AR8263	X4002	CRYSTAL	FCX03-22.579MHz	1	3010390R2	N
AR8263	X4003	CRYSTAL	FCX-03-24.576MHz	1	3010385R2	N

PRINTED CIRCUIT BOARD PARTS LIST

DV-SP1000

U20: IEEE1394 TERMINAL PC BOARD NADG-8262

<WT3P> & <GK3P> only use

PWB NO.	CIRCUIT NO.	PART NAME	DESCRIPTION		PART NO.	REMARKS
DG8262	C3001	CHIP ELECT C	CEWX6.3V-100M	1	356721019R2	
DG8262	C3003	C-CERA C	CK725F1A-105Z1	1	332181050R1	
DG8262	C3004	CHIP ELECT C	CEWX4V-220M	1	3567A2219R2	
DG8262	C3006	CHIP ELECT C	CEWX4V-220M	1	3567A2219R2	
DG8262	C3007	C-CERA C	CK725F1A-105Z1	1	332181050R1	
DG8262	C3008	C-CERA C	CK725F1A-105Z1	1	332181050R1	
DG8262	C3009	C-CERA C	CK725F1A-105Z1	1	332181050R1	
DG8262	C3010	C-CERA C	CK725F1A-105Z1	1	332181050R1	
DG8262	C3011	C-CERA C	CK725F1A-105Z1	1	332181050R1	
DG8262	C3012	C-CERA C	CK725F1A-105Z1	1	332181050R1	
DG8262	C3013	C-CERA C	CK725F1A-105Z1	1	332181050R1	
DG8262	C3014	C-CERA C	CK725F1A-105Z1	1	332181050R1	
DG8262	C3015	C-CERA C	CK725F1A-105Z1	1	332181050R1	
DG8262	C3016	CHIP ELECT C	CEWX4V-220M	1	3567A2219R2	
DG8262	C3017	C-CERA C	CK725F1A-105Z1	1	332181050R1	
DG8262	C3018	C-CERA C	CK725F1A-105Z1	1	332181050R1	
DG8262	C3019	C-CERA C	CK725F1A-105Z1	1	332181050R1	
DG8262	C3020	C-CERA C	CK725F1A-105Z1	1	332181050R1	
DG8262	C3021	C-CERA C	CK725F1A-105Z1	1	332181050R1	
DG8262	C3022	C-CERA C	CK725F1A-105Z1	1	332181050R1	
DG8262	C3023	C-CERA C	CK725B1C-104K1	1	332121045R1	
DG8262	C3024	C-CERA C	CK725B1C-104K1	1	332121045R1	
DG8262	C3025	CHIP ELECT C	CEWX4V-220M	1	3567A2219R2	

DG8262	C3026	C-CERA C	CK725F1A-105Z1	1	332181050R1
DG8262	C3027	C-CERA C	CC732CH1H-180J	1	347341804R1
DG8262	C3028	C-CERA C	CC732CH1H-150J	1	347341504R1
DG8262	C3029	C-CERA C	CK725F1A-105Z1	1	332181050R1
DG8262	C3030	C-CERA C	CK725F1A-105Z1	1	332181050R1
DG8262	C3031	CHIP ELECT C	CEWX4V-220M	1	3567A2219R2
DG8262	C3032	C-CERA C	CK725F1A-105Z1	1	332181050R1
DG8262	C3033	C-CERA C	CK725F1A-105Z1	1	332181050R1
DG8262	C3034	C-CERA C	CK725F1A-105Z1	1	332181050R1
DG8262	C3035	C-CERA C	CK725F1A-105Z1	1	332181050R1
DG8262	C3036	C-CERA C	CK725F1A-105Z1	1	332181050R1
DG8262	C3037	C-CERA C	CC725CH1E-102J1	1	342111024R1
DG8262	C3038	C-CERA C	CK725F1A-105Z1	1	332181050R1
DG8262	C3039	C-CERA C	CC725CH1E-102J1	1	342111024R1
DG8262	C3040	C-CERA C	CC725CH1E-102J1	1	342111024R1
DG8262	C3041	C-CERA C	CC725CH1E-102J1	1	342111024R1
DG8262	C3042	C-CERA C	CC725CH1E-102J1	1	342111024R1
DG8262	C3043	C-CERA C	CC725CH1E-102J1	1	342111024R1
DG8262	C3044	C-CERA C	CK725B1C-104K1	1	332121045R1
DG8262	C3045	C-CERA C	CK725F1A-105Z1	1	332181050R1
DG8262	C3046	C-CERA C	CK725F1A-105Z1	1	332181050R1
DG8262	C3047	C-CERA C	CK725F1A-105Z1	1	332181050R1
DG8262	C3049	C-CERA C	CC725CH1E-102J1	1	342111024R1
DG8262	C3050	C-CERA C	CC725CH1E-102J1	1	342111024R1
DG8262	C3051	C-CERA C	CK725B1C-104K1	1	332121045R1
DG8262	C3052	C-CERA C	CC732CH1H-221J	1	347342214R1
DG8262	C3053	C-CERA C	CC732CH1H-221J	1	347342214R1
DG8262	C3055	CHIP ELECT C	CEWX4V-220M	1	3567A2219R2
DG8262	C3056	C-CERA C	CK725F1A-105Z1	1	332181050R1
DG8262	C3057	CHIP ELECT C	CEWX4V-220M	1	3567A2219R2
DG8262	C3058	C-CERA C	CC725CH1E-102J1	1	342111024R1
DG8262	C3059	C-CERA C	CK725F1A-105Z1	1	332181050R1
DG8262	C3060	C-CERA C	CK725B1A-224K1	1	332132245R1
DG8262	C3061	C-CERA C	CC732CH1H-470J	1	347344704R1
DG8262	C3062	C-CERA C	CK725F1A-105Z1	1	332181050R1
DG8262	C3501	CHIP ELECT C	CEWX4V-220M	1	3567A2219R2
DG8262	C3502	C-CERA C	CK725F1A-105Z1	1	332181050R1
DG8262	C3503	C-CERA C	CK725F1A-105Z1	1	332181050R1
DG8262	C3504	C-CERA C	CK725F1A-105Z1	1	332181050R1
DG8262	C3505	C-CERA C	CK725F1A-105Z1	1	332181050R1
DG8262	C3509	C-CERA C	CK725F1A-105Z1	1	332181050R1
DG8262	C3510	C-CERA C	CK725F1A-105Z1	1	332181050R1
DG8262	C3511	C-CERA C	CK725F1A-105Z1	1	332181050R1
DG8262	C3512	C-CERA C	CK725F1A-105Z1	1	332181050R1
DG8262	C3514	C-CERA C	CK725B1C-104K1	1	332121045R1

DG8262	C3516	C-CERA C	CK725F1A-105Z1	1	332181050R1		
DG8262	C3517	C-CERA C	CC732CH1H-180J	1	347341804R1		
DG8262	C3518	C-CERA C	CC732CH1H-180J	1	347341804R1		
DG8262	C3520	CHIP ELECT C	CEWX4V-220M	1	3567A2219R2		
DG8262	C3521	C-CERA C	CK725F1A-105Z1	1	332181050R1		
DG8262	C3523	CHIP ELECT C	CEWX6.3V-100M	1	356721019R2		
DG8262	C3524	C-CERA C	CK725F1A-105Z1	1	332181050R1		
DG8262	C3525	CHIP ELECT C	CEWX4V-220M	1	3567A2219R2		
DG8262	C3526	C-CERA C	CK725F1A-105Z1	1	332181050R1		
DG8262	C3527	C-CERA C	CK725F1A-105Z1	1	332181050R1		
DG8262	C3530	CHIP ELECT C	CEWX50V-1M	1	356780109R2		
DG8262	C3531	CHIP ELECT C	CEWX50V-1M	1	356780109R2		
DG8262	C3532	CHIP ELECT C	CEWX50V-1M	1	356780109R2		
DG8262	C3533	CHIP ELECT C	CEWX50V-1M	1	356780109R2		
DG8262	C3534	CHIP ELECT C	CEWX50V-1M	1	356780109R2		
DG8262	C3535	C-CERA C	CK725F1A-105Z1	1	332181050R1		
DG8262	C3536	C-CERA C	CK725F1A-105Z1	1	332181050R1		
DG8262	C3537	CHIP ELECT C	CEWX4V-220M	1	3567A2219R2		
DG8262	E4002	HOLDER	(CLAMP)	1	27191220	N	MP002:::::
DG8262	L3001	CORE	BLM41PG750SN1L	1	230950R2	N	
DG8262	L3002	CORE	BLM41PG750SN1L	1	230950R2	N	
DG8262	L3003	CORE	BLM41PG750SN1L	1	230950R2	N	
DG8262	L3004	CORE	BLM41PG750SN1L	1	230950R2	N	
DG8262	L3005	CORE	BLM41PG750SN1L	1	230950R2	N	
DG8262	L3009	CORE	DLP11SN161SL2L	1	230977R2	N	
DG8262	L3010	CORE	DLP11SN161SL2L	1	230977R2	N	
DG8262	L3011	CORE	DLP11SN161SL2L	1	230977R2	N	
DG8262	L3012	CORE	DLP11SN161SL2L	1	230977R2	N	
DG8262	L3505	CORE	BLM41PG750SN1L	1	230950R2	N	
DG8262	L3507	CHOKE COIL	BLM21B222SPT	1	230921R2		
DG8262	L3508	CHOKE COIL	BLM21B222SPT	1	230921R2		
DG8262	L3509	CHOKE COIL	BLM21B222SPT	1	230921R2		
DG8262	L3510	CHOKE COIL	BLM21B222SPT	1	230921R2		
DG8262	L3511	CORE	BLM41PG750SN1L	1	230950R2	N	
DG8262	L3512	CORE	BLM41PG750SN1L	1	230950R2	N	
DG8262	P1301B	PLUG	SM16B-SURS-TF	1	25056399R2	N	
DG8262	P3002A	PLUG	NPLG-11P1108	1	25056169R2	N	
DG8262	P3003	PLUG	NPLG-10P1107	1	25056168R2	N	JTAG用::::
DG8262	P3012	PLUG	NPLG-11P1108	1	25056169R2	N	GPIO用::::
DG8262	P3019	SOCKET	CSS5004-1062G	1	25053028R3	N	
DG8262	P3020	SOCKET	CSS5004-1062G	1	25053028R3	N	
DG8262	P3503	PLUG(B to B)	IMSA-9850B-22Y900	1	25056206R2	N	
DG8262	P3506	SOCKET	NSCT-9P2277	1	25052379		
DG8262	P3507	PLUG	NPLG-6P932	1	25055979R2		for debag
DG8262	P3509	PLUG	NPLG-6P932	1	25055979R2		for debag

DG8262	P3510	PLUG	NPLG-2P29	1	25055038		for debag
DG8262	P3511	PLUG	NPLG-7P933	1	25055980R2		for ROM write
DG8262	P3512	PLUG	NPLG-6P932	1	25055979R2		for debag
DG8262	P3513	PLUG	NPLG-2P29	1	25055038		for flash ROM write
DG8262	Q3001	IC	LM1117MPX-ADJ	1	22241648R2		
DG8262	Q3004	IC	TSB43CA42PGF	1	22242061R3	N	
DG8262	Q3005	IC	74AHC541PW	1	22274541ER2PH	N	
DG8262	Q3006	IC	TC74VHC74FT	1	22274074ER2TO		
DG8262	Q3007	IC	TC7SH08FU	1	22241830R2TO		
DG8262	Q3008	IC	TC7SZ125FU	1	22241895R2		
DG8262	Q3009	IC	TLC2932IPWLE	1	22242062R2	N	
DG8262	Q3010	IC	TC7WT241FU	1	22241546R2		
DG8262	Q3011	IC	TC7WH241FU	1	22242076R2TO	N	
DG8262	Q3012	IC	74AHC541PW	1	22274541ER2PH	N	
DG8262	Q3501	IC	S29AL008D90TFI010 (0126)	1	NSP	N	
DG8262	Q3502	IC	HD64F2367VF33 (0095)	1	222W0008R300954 DISCON	N	
DG8262	Q3503	TR	DTC144EE	1	2216390R2		
DG8262	Q3505	IC	TC7SH08FU	1	22241830R2TO		
DG8262	Q3506	IC	TC7SH08FU	1	22241830R2TO		
DG8262	Q3508	IC	LM1117MPX-ADJ	1	22241648R2		
DG8262	Q3509	IC	MPD4721GS	1	22241537R2		
DG8262	Q3511	IC	S-80127CNMC-JKM-T2	1	22241642R2		
DG8262	R3001	C-CARBON R	RN72K1J-000JE	1	435030004R1		
DG8262	R3002	C-CARBON R	RN72K1J-121FE	1	435031212R1		
DG8262	R3003	C-CARBON R	RN72K1J-201FE	1	435032012R1	N	
DG8262	R3004	C-R NET	RM7LJ220X04	1	43484722004R2	N	
DG8262	R3005	C-R NET	RM7LJ220X04	1	43484722004R2	N	
DG8262	R3006	C-R NET	RM7LJ220X04	1	43484722004R2	N	
DG8262	R3007	C-R NET	RM7LJ220X04	1	43484722004R2	N	
DG8262	R3008	C-R NET	RM7LJ220X04	1	43484722004R2	N	
DG8262	R3009	C-R NET	RM7LJ220X04	1	43484722004R2	N	
DG8262	R3010	C-CARBON R	RN72K1J-220JE	1	435032204R1		
DG8262	R3011	C-CARBON R	RN72K1J-220JE	1	435032204R1		
DG8262	R3012	C-CARBON R	RN72K1J-103JE	1	435031034R1		
DG8262	R3013	C-CARBON R	RN72K1J-103FE	1	435031032R1		
DG8262	R3014	C-CARBON R	RN72K1J-103JE	1	435031034R1		
DG8262	R3015	C-CARBON R	RN72K1J-103FE	1	435031032R1		
DG8262	R3016	C-CARBON R	RN72K1J-103FE	1	435031032R1		
DG8262	R3017	C-CARBON R	RN72K1J-103FE	1	435031032R1		
DG8262	R3018	C-CARBON R	RN72K1J-103JE	1	435031034R1		
DG8262	R3019	C-CARBON R	RN72K1J-103FE	1	435031032R1		
DG8262	R3020	C-R NET	RM7LJ103X04	1	43484710304R2	N	
DG8262	R3021	C-CARBON R	RN72K1J-103FE	1	435031032R1		
DG8262	R3022	C-CARBON R	RN72K1J-000JE	1	435030004R1		

DG8262	R3023	C-CARBON R	RN72K1J-000JE	1	435030004R1		
DG8262	R3025	C-CARBON R	RN72K1J-000JE	1	435030004R1		
DG8262	R3027	C-R NET	RM7LJ103X04	1	43484710304R2	N	
DG8262	R3028	C-R NET	RM7LJ103X04	1	43484710304R2	N	
DG8262	R3029	C-R NET	RM7LJ103X04	1	43484710304R2	N	
DG8262	R3041	C-CARBON R	RN72K1J-103FE	1	435031032R1		
DG8262	R3042	C-CARBON R	RN72K1J-220JE	1	435032204R1		
DG8262	R3043	C-R NET	RM7LJ103X04	1	43484710304R2	N	
DG8262	R3044	C-CARBON R	RN72K1J-220JE	1	435032204R1		
DG8262	R3045	C-R NET	RM7LJ103X04	1	43484710304R2	N	
DG8262	R3046	C-CARBON R	RN72K1J-220JE	1	435032204R1		IOUTE～SACD_BCK
DG8262	R3047	C-R NET	RM7LJ103X04	1	43484710304R2	N	
DG8262	R3048	C-R NET	RM7LJ103X04	1	43484710304R2	N	
DG8262	R3049	C-CARBON R	RN72K1J-103JE	1	435031034R1		
DG8262	R3050	C-R NET	RM7LJ220X04	1	43484722004R2	N	
DG8262	R3051	C-CARBON R	RN72K1J-103JE	1	435031034R1		
DG8262	R3052	C-CARBON R	RN72K1J-103JE	1	435031034R1		
DG8262	R3053	C-R NET	RM7LJ220X04	1	43484722004R2	N	
DG8262	R3054	C-CARBON R	RN72K1J-103JE	1	435031034R1		
DG8262	R3056	C-CARBON R	RN72K1J-103JE	1	435031034R1		
DG8262	R3057	C-CARBON R	RN72K1J-103JE	1	435031034R1		
DG8262	R3058	C-CARBON R	RN72K1J-103JE	1	435031034R1		
DG8262	R3059	C-CARBON R	RN72K1J-000JE	1	435030004R1		
DG8262	R3060	C-CARBON R	RN72K1J-220JE	1	435032204R1		
DG8262	R3061	C-CARBON R	RN72K1J-220JE	1	435032204R1		
DG8262	R3062	C-CARBON R	RN72K1J-103JE	1	435031034R1		
DG8262	R3079	C-CARBON R	RN72K1J-103JE	1	435031034R1		
DG8262	R3080	C-CARBON R	RN72K1J-220JE	1	435032204R1		
DG8262	R3081	C-CARBON R	RN72K1J-220JE	1	435032204R1		
DG8262	R3082	C-CARBON R	RN72K1J-103FE	1	435031032R1		
DG8262	R3083	C-CARBON R	RN72K1J-153FE	1	435031532R1		
DG8262	R3084	C-CARBON R	RN72K1J-102FE	1	435031022R1		
DG8262	R3085	C-CARBON R	RN72K1J-000JE	1	435030004R1		
DG8262	R3086	C-CARBON R	RN72K1J-103JE	1	435031034R1		
DG8262	R3087	C-CARBON R	RN72K1J-103JE	1	435031034R1		
DG8262	R3089	C-R NET	RM7LJ220X04	1	43484722004R2	N	
DG8262	R3090	C-R NET	RM7LJ220X04	1	43484722004R2	N	
DG8262	R3091	C-CARBON R	RN72K1J-220JE	1	435032204R1		
DG8262	R3092	C-CARBON R	RN72K1J-220JE	1	435032204R1		
DG8262	R3093	C-CARBON R	RN72K1J-000JE	1	435030004R1		
DG8262	R3094	C-CARBON R	RN72K1J-000JE	1	435030004R1		
DG8262	R3095	C-CARBON R	RN72K1J-000JE	1	435030004R1		
DG8262	R3096	C-CARBON R	RN72K1J-102JE	1	435031024R1		
DG8262	R3097	C-CARBON R	RN72K1J-220JE	1	435032204R1		
DG8262	R3098	C-CARBON R	RN72K1J-102JE	1	435031024R1		

DG8262	R3099	C-CARBON R	RN72K1J-000JE	1	435030004R1	
DG8262	R3100	C-CARBON R	RN72K1J-000JE	1	435030004R1	
DG8262	R3101	C-CARBON R	RN72K1J-560FE	1	435035602R1	
DG8262	R3102	C-CARBON R	RN72K1J-560FE	1	435035602R1	
DG8262	R3103	C-CARBON R	RN72K1J-560FE	1	435035602R1	
DG8262	R3104	C-CARBON R	RN72K1J-512FE	1	435035122R1	
DG8262	R3105	C-CARBON R	RN72K1J-560FE	1	435035602R1	
DG8262	R3106	C-CARBON R	RN72K1J-512FE	1	435035122R1	
DG8262	R3107	C-CARBON R	RN72K1J-560FE	1	435035602R1	
DG8262	R3108	C-CARBON R	RN72K1J-560FE	1	435035602R1	
DG8262	R3109	C-CARBON R	RN72K1J-222JE	1	435032224R1	
DG8262	R3110	C-CARBON R	RN72K1J-560FE	1	435035602R1	
DG8262	R3111	C-CARBON R	RN72K1J-560FE	1	435035602R1	
DG8262	R3112	C-CARBON R	RN72K1J-000JE	1	435030004R1	
DG8262	R3113	C-CARBON R	RN72K1J-220JE	1	435032204R1	
DG8262	R3501	C-R NET	RM7LJ220X04	1	43484722004R2	N
DG8262	R3502	C-CARBON R	RN72K1J-472JE	1	435034724R1	
DG8262	R3503	C-CARBON R	RN72K1J-472JE	1	435034724R1	
DG8262	R3504	C-R NET	RM7LJ472X04	1	43484747204R2	N
DG8262	R3505	C-CARBON R	RN72K1J-220JE	1	435032204R1	
DG8262	R3506	C-CARBON R	RN72K1J-220JE	1	435032204R1	
DG8262	R3507	C-CARBON R	RN72K1J-220JE	1	435032204R1	
DG8262	R3508	C-CARBON R	RN72K1J-220JE	1	435032204R1	
DG8262	R3509	C-CARBON R	RN72K1J-220JE	1	435032204R1	
DG8262	R3510	C-CARBON R	RN72K1J-220JE	1	435032204R1	
DG8262	R3511	C-R NET	RM7LJ220X04	1	43484722004R2	N
DG8262	R3512	C-R NET	RM7LJ220X04	1	43484722004R2	N
DG8262	R3514	C-R NET	RM7LJ220X04	1	43484722004R2	N
DG8262	R3515	C-R NET	RM7LJ220X04	1	43484722004R2	N
DG8262	R3516	C-R NET	RM7LJ220X04	1	43484722004R2	N
DG8262	R3517	C-CARBON R	RN72K1J-000JE	1	435030004R1	
DG8262	R3518	C-R NET	RM7LJ220X04	1	43484722004R2	N
DG8262	R3519	C-R NET	RM7LJ220X04	1	43484722004R2	N
DG8262	R3520	C-R NET	RM7LJ220X04	1	43484722004R2	N
DG8262	R3521	C-R NET	RM7LJ220X04	1	43484722004R2	N
DG8262	R3524	C-R NET	RM7LJ220X04	1	43484722004R2	N
DG8262	R3525	C-R NET	RM7LJ220X04	1	43484722004R2	N
DG8262	R3526	C-R NET	RM7LJ220X04	1	43484722004R2	N
DG8262	R3531	C-CARBON R	RN72K1J-220JE	1	435032204R1	
DG8262	R3532	C-CARBON R	RN72K1J-220JE	1	435032204R1	
DG8262	R3533	C-CARBON R	RN72K1J-000JE	1	435030004R1	
DG8262	R3534	C-CARBON R	RN72K1J-103JE	1	435031034R1	
DG8262	R3535	C-R NET	RM7LJ220X04	1	43484722004R2	N
DG8262	R3536	C-CARBON R	RN72K1J-472JE	1	435034724R1	
DG8262	R3537	C-CARBON R	RN72K1J-472JE	1	435034724R1	

DG8262	R3538	C-R NET	RM7LJ220X04	1	43484722004R2	N
DG8262	R3539	C-CARBON R	RN72K1J-472JE	1	435034724R1	
DG8262	R3540	C-CARBON R	RN72K1J-181JE	1	435031814R1	
DG8262	R3541	C-CARBON R	RN72K1J-220JE	1	435032204R1	
DG8262	R3542	C-R NET	RM7LJ220X04	1	43484722004R2	N
DG8262	R3543	C-CARBON R	RN72K1J-472JE	1	435034724R1	
DG8262	R3544	C-CARBON R	RN72K1J-000JE	1	435030004R1	
DG8262	R3545	C-R NET	RM7LJ220X04	1	43484722004R2	N
DG8262	R3546	C-R NET	RM7LJ220X04	1	43484722004R2	N
DG8262	R3547	C-R NET	RM7LJ220X04	1	43484722004R2	N
DG8262	R3549	C-R NET	RM7LJ220X04	1	43484722004R2	N
DG8262	R3550	C-R NET	RM7LJ220X04	1	43484722004R2	N
DG8262	R3551	C-R NET	RM7LJ220X04	1	43484722004R2	N
DG8262	R3552	C-CARBON R	RN72K1J-121FE	1	435031212R1	
DG8262	R3553	C-CARBON R	RN72K1J-201FE	1	435032012R1	N
DG8262	R3554	C-R NET	RM7LJ220X04	1	43484722004R2	N
DG8262	R3555	C-CARBON R	RN72K1J-472JE	1	435034724R1	
DG8262	R3557	C-CARBON R	RN72K1J-103JE	1	435031034R1	
DG8262	R3558	C-CARBON R	RN72K1J-472JE	1	435034724R1	
DG8262	R3563	C-CARBON R	RN72K1J-220JE	1	435032204R1	
DG8262	R3564	C-R NET	RM7LJ220X04	1	43484722004R2	N
DG8262	R3565	C-R NET	RM7LJ220X04	1	43484722004R2	N
DG8262	R3566	C-CARBON R	RN72K1J-472JE	1	435034724R1	
DG8262	R3567	C-CARBON R	RN72K1J-000JE	1	435030004R1	
DG8262	R3568	C-CARBON R	RN72K1J-000JE	1	435030004R1	
DG8262	R3569	C-CARBON R	RN72K1J-222JE	1	435032224R1	
DG8262	R3570	C-CARBON R	RN72K1J-222JE	1	435032224R1	
DG8262	R3571	C-CARBON R	RN72K1J-472JE	1	435034724R1	
DG8262	R3574	C-CARBON R	RN72K1J-103JE	1	435031034R1	
DG8262	R3575	C-CARBON R	RN72K1J-103JE	1	435031034R1	
DG8262	R3576	C-CARBON R	RN72K1J-103JE	1	435031034R1	
DG8262	R3577	C-CARBON R	RN72K1J-103JE	1	435031034R1	
DG8262	X3001	CRYSTAL	FCX-03-24.576MHz	1	3010385R2	N
DG8262	X3501	CRYSTAL	FCX-03-16.000MHz	1	3010384R2	N

PARTS LIST

EXPLODED VIEW PARTS LIST

DV-SP1000

REF. NO.	PART NAME	DESCRIPTION	PART NO.		REMARKS	
A01	CHASSIS	--	27100441A	N		1
A02	REAR PANEL	UDD1N	27123198A	N	**<DC1N>**	1
A02	REAR PANEL	UWT3P	27123200A		**<WT3P>**	1
A02	REAR PANEL	UPP2P	27123199A	N	**<PP2P>**	1
A02	REAR PANEL	UGK3P	27123201A	N	**<GK3P>**	1
A02	REAR PANEL	UGR6P	27123203	N	**<GR6P>**	1
A04	RETAINER	(SIDE)	27141888	N		2
A05	SCREW	3TTB+8B(BC)	838430088			74
A06	SCREW	USUATAMA3*8	801613	N		4
A07	SCREW	3P+6FN(BC)	82143006			4
A08	RETAINER	(PC)	27141889	N		1
A09	SCREW	M1.6*6(BC)	82141606	N		2
A10	SCREW	3TTB+8B(CU)	801612		RE(PC), F. PANEL	10
A11	F PANEL AS	(B)UWT	27212667		**(B) <WT3P>**	1
A11	F PANEL AS	(B)UDDDV-SP1000	27212595A	N	**(B) <DC1N>**	1
A11	F PANEL AS	(B)UPPDV-SP1000	27212596A	N	**(B) <PP2P>**	1
A11	F PANEL AS	(S)UPPDV-SP1000	27212597A	N	**(S) <PP2P>**	1
A11	F PANEL AS	(G)UWTDV-SP1000	27212598A	N	**(G) <GK3P> <WT3P> <GR6P>**	1
A11	F PANEL AS	--	27212629A	N	**(S) <DC1N>**	1
A12	BRACKET	(C)	27130915A	N		1
A13	CLAMP	WS-2NS	27300833			1
A14	CUSHION	(SCREW)	28141420			1
A15	BRACKET	(F)	27130916B	N		1
A16	BRACKET	(R)	27130917A	N		1
A17	HOLDER	(CLAMP)	27191220	N		2
A18	KNOB	(ST)AS 1000(B)UDD	28326112	N	**(B) <DC1N>**	1
A18	KNOB	(ST)AS 1000(B)	28326111		**(B) <WT3P><PP2P>**	1
A18	KNOB	(ST)AS 1000(S)	28326113		**(S) <PP2P>**	1
A18	KNOB	(ST)AS 1000(S)	28326193	N	**(S) <DC1N>**	1
A18	KNOB	(ST)AS1000(G)(N)	28326114	N	**(G)**	1
A19	SHEET	(F.BRA)	27150495	N		1
A20	RETAINER	(CHA)	27141890	N		1
A21	GUIDE	(VC)1000(B)	27268088	N	F.PANEL (B)	1
A21	GUIDE	(VC)1000(S)	27268089	N	F.PANEL (S)	1
A21	GUIDE	(VC)1000(G)(N)	27268090	N	F.PANEL (G)	1
A22	SCREW	3TTB+8B(BC)	838430088		RE(CHA),BR(F)	5
A23	SCREW	3TTB+8B(CU)	801612			2
A24	RETAINER	(HEAT)	27141770-1			1
A25	SCREW	3P+6FN(BC)	82143006			2

A29	SCREW	3TTB+8B(BC)	838430088		RE(HEAT)	2
A31	RETAINER	(R)	27141891	N		1
A33	SCREW	3TTB+8B(BC)	838430088		RE(R)	2
A35	BUSHING	--	28170070		CHASSIS	2
A37	BUSHING	L162	28170082	N	CHASSIS	1
A39	BUSHING	L130	28170079	N	RE(HEAT),BR(C)	2
A41	BUSHING	L40	28170080	N	BR(C)	1
A43	BUSHING	L18.5	28170081	N	BR(C)	2
A44	SHLD PLT	(FFC)	27150492	N		1
A45	HOLDER	KGLS-12RT	27190266			4
A47	HOLDER	KGLS-18RT	27190657			1
A49	HOLDER	KGLS-22S	27190369			2
A50	HOLDER	KGLS-4S	27190009			1
A51	RETAINER	(MPWB)	27141892A	N		1
A53	SCREW	3TTB+8B(CU)	801612			2
A55	SCREW	3P+6FN(BC)	82143006			10
A57	SCREW	4TTC+8C(BC)	830440089			4
A60	SCREW	3SMH10W.SW+15B(CU)	801606			1
A63	RETAINER	(PCALL1)	27141893	N		2
A65	RETAINER	(PCALL2)	27141894	N		1
A67	CUSHION	T4L100D10	28141565	N		3
A71	SCREW	3TTB+8B(CU)	801612			6
A73	BOTTOM BRD	--	27170334A	N		1
A75	SCREW	3TTB+8B(BC)	838430088		BOTTOM BRD	11
A77	BOTTOM LEG	(AS)	27175400	N		4
A79	CUSHION	--	28141559	N	BOTTOM LEG	4
A80	CUSHION	(LEG)	28141591	N	LEG	1
A81	SCREW	4TTC+10C(BC)	830440109		BOTTOM LEG	4
A83	S PANEL(L)	(B)	27212571A	N	**(B)**	1
A83	S PANEL(L)	(S)	27212572A	N	**(S)**	1
A83	S PANEL(L)	(G)/(N)	27212573A	N	**(G)**	1
A85	S PANEL(R)	(B)	27212575A	N	**(B)**	1
A85	S PANEL(R)	(S)	27212576A	N	**(S)**	1
A85	S PANEL(R)	(G)/(N)	27212577A	N	**(G)**	1
A87	RETAINER	(COVER)	27141895A	N		2
A89	SCREW	USUATAMA3*8	801613	N	COVER	4
A91	SCREW	RCTK4*10(BC)	801616A	N	S.PANEL (B)	8
A91	SCREW	RCTK4*10(NI)	801617A	N	S.PANEL (S)	8
A91	SCREW	RCTK4*10(NI)	801617A	N	S.PANEL (G)	8
A93	COVER	(B)	28184879A	N	**(B)**	1
A93	COVER	(S)	28184880A	N	**(S)**	1
A93	COVER	(G)	28184889A	N	**(G)**	1
A95	CUSHION	T4L20D10	28141566	N	COVER	9
A97	SCREW	RCTK4*10(BC)	801616A	N	COVER (B)	7
A97	SCREW	RCTK4*10(NI)	801617A	N	COVER (S)	7

A97	SCREW	RCTK4*10(NI)	801617A	N	COVER (G)	7
A101	CUSHION	--	28141409A			1
A201	DOOR	(B)	28148563	N	**(B)**	1
A201	DOOR	(S)	28148564	N	**(S)**	1
A201	DOOR	(G)/(N)	28148565	N	**(G)**	1
A203	SCREW	2.6TTB+8B(BC)	838426088			4
A205	PLATE	(DOOR)(B)	27262700	N	**(B)**	1
A205	PLATE	(DOOR)(S)	27262701	N	**(S)**	1
A205	PLATE	(DOOR)(G)/(N)	27262702	N	**(G)**	1
A207	BRACKET	(MECHA)	27130845			1
A211	SLIDER	--	27220063			1
A213	END CAP	(MECHABOX-L)	28125388			1
A215	SCREW	2.6TTB+8B(BC)	838426088			4
A217	END CAP	(MECHABOX-R)	28125389			1
A221	SPACER	(MARU)	27270425			4
A227	TAPE	(CU)	29110168			2
A300	SHLD PLT	(POW) CHASSIS	27150493		**Except <DC1N>**	1
A301	CLEAR PLT	(B)	28192010A	N	**(B)**	1
A301	CLEAR PLT	(S)	28192011A		**(S)**	1
A301	CLEAR PLT	(S)	28192011A		**(G)**	1
A331	GUIDE	(POW)1000(B)	27268083	N	**(B)**	1
A331	GUIDE	(POW)1000(S)	27268084	N	**(S)**	1
A331	GUIDE	(POW)1000(G)(N)	27268085	N	**(G)**	1
A311	KNOB	(POW)AS1000(B)	28326107	N	**(B)**	1
A311	KNOB	(POW)AS1000(S)	28326108	N	**(S)**	1
A311	KNOB	(POW)AS1000(G)(N)	28326109	N	**(G)**	1
A317	KNOB	(FF)AS1000(B)	28326117	N	**(B)**	1
A317	KNOB	(FF)AS1000(S)	28326118	N	**(S)**	1
A317	KNOB	(FF)AS1000(G)(N)	28326119	N	**(G)**	1
A323	KNOB	(GUIDE-PLAY)	28325844	N	**(B)**	1
A323	KNOB	(GUIDE-PLAY)1000(S)	28326143	N	**(S)**	1
A323	KNOB	(GUIDE-PLAY)1000(G)(N)	28326144	N	**(G)**	1
A325	KNOB	(PLAY)AS1000(B)	28326120A	N	**(B)**	3
A325	KNOB	(PLAY)AS1000(S)	28326121A	N	**(S)**	3
A325	KNOB	(PLAY)AS1000(G)(N)	28326122A	N	**(G)**	3
A401	END CAP	(L)(B) F.PANEL	28125400A	N	**(B)**	1
A401	END CAP	(L)(S) F.PANEL	28125401A		**(S)**	1
A401	END CAP	(L)(G) F.PANEL	28125402	N	**(G)**	1
A403	END CAP	(R)(B) F.PANEL	28125403A	N	**(B)**	1
A403	END CAP	(R)(S) F.PANEL	28125404A	N	**(S)**	1
A403	END CAP	(R)(G) F.PANEL	28125405	N	**(G)**	1
A405	BADGE	ONKYO(BRN)	28135295			1
A407	BADGE	VIDEO/AUDIO(B)	28135291A	N	**(B)**	1
A407	BADGE	VIDEO/AUDIO(S)	28135292	N	**(S)**	1
A407	BADGE	VIDEO/AUDIO(S)	28135292	N	**(G)**	1

A409	BADGE	(SACD)	28135288A		**(B)**	1
A409	BADGE	(SACD)	28135289A		**(S)**	1
A409	BADGE	(SACD)	28135289A		**(G)**	1
A411	FACET	(7)	28198977	N	F.PANEL	1
A421	WIRE TIE	BSK-1	260208			10
A423	SCREW	4TTB+8C(BC)	838440089		AC IN	2
A425	LABEL	(PT)1000	29363646	N		1
A427	LABEL	LABEL (Flash)	29360778		COVER	2
A429	BUSHING	CE-016 100MM	28170039		NCAF8266	1
A613	ANTI VIB	15 x5 x3	24847051	N		1
A615	ANTI VIB	8 x5 x3	24847052	N		3
A617	SHEET	(PAPER)	29095972	N		1
A619	SPACER	--	27270439			1
A621	SPACER	t0.5 x 8 x 3.2	27270438			1
A623	CUSHION	75x 10 x t0.75	28141602	N		1
A625	CUSHION	(BUTYL)t0.8*10*10	28141552			4
A999	SPACER	--	27270443			2
E1001	CLIP	CS-1U	27255004			5
F001	FUSE	1.6A-UL/T-237	252158	!	**Only <DC1N>**	1
F001 or	FUSE	1.6A-T/UL-ST2	252252	!	**Only <DC1N>**	(1)
F001	FUSE	2.5A-SE-EAK FUSE	252075	!	**Except <DC1N>**	1
F001 or	FUSE	2.5A-SE-TL250V	252275	!	**Except <DC1N>**	(1)
F9001	FUSE	2.5A-UL/T-237	252160	!	**Only <DC1N>**	1
F9001 or	FUSE	2.5A-T/UL-ST2	252254	!	**Only <DC1N>**	(1)
F9001	FUSE	2.5A-SE-EAK FUSE	252075	!	**Except <DC1N>**	1
F9001 or	FUSE	2.5A-SE-TL250V	252275	!	**Except <DC1N>**	(1)
L901	CORE	TFCK-23-11-14	230923			1
L902	CORE	ESD-R-19DB	230983			1
L903	CORE	ESD-R-19DB	230983			1
L904	CORE	ESD-R-19DB	230983			1
L905	CORE	ESD-R-19DB	230983			1
P1001A	FFC	NCFCD-26003	204D26003			1
P1101A	SOCKET AS	NSAS-12P0829	20022261220			1
P1301	SOCKET AS	NSAS-32P1325	200KK503240UL	N		1
P1302	SOCKET AS	NSAS-40P1296	200KK584035UL	N		1
P2001	SOCKET AS	NSAS-28P1291	200KK582820UL	N		1
P2002	SOCKET AS	NSAS-30P1290	200KK583020UL	N		1
P2003	SOCKET AS	NSAS-40P1324	200KK504020UL	N		1
P2004	SOCKET AS	NSAS-32P1289	200KK583225UL	N		1
P2701	SOCKET AS	NSAS-14P1319	20022391435UL	N		1
P2901	SOCKET AS	NSAS-12P1272	20044191220UL	N		1
P3002	SOCKET AS	NSAS-22P1413	200JJ392250UL			1
P4003	SOCKET AS	NSAS-8P1389	2009990896UL			1
P4005	SOCKET AS	NSAS-10P1294	2009990853UL	N		1
P4008	SOCKET AS	NSAS-10P1273	20044191050UL	N		1

P4202	SOCKET AS	NSAS-30P1387	200JJ393015UL			1
P4203	SOCKET AS	NSAS-28P1388	200JJ392815UL			1
P4204	SOCKET AS	NSAS-20P1270	20044192015UL		**Only <PP2P>**	1
P4571	SOCKET AS	NSAS-16P1297	200JJ391625UL	N		1
P4950	SOCKET AS	NSAS-14P1323	20044191415UL	N		1
P5402	SOCKET AS	NSAS-20P1279	200JJ392030UL		**Except <DC1N>**	1
P6005	SOCKET AS	NSAS-16P1297	200JJ391625UL	N	**Only <DC1N>**	1
P6005	SOCKET AS	NSAS-16P1344	200JJ391620UL		**Except <DC1N>**	1
P6302	SOCKET AS	NSAS-14P1342	200JJ391420UL	N	**Only <PP2P>**	1
P6551	SOCKET AS	NSAS-18P1338	2009990879UL	N		1
P6703	SOCKET AS	NSAS-20P1280	200JJ392010UL		**Except <DD1N>**	1
P7010	SOCKET AS	NSAS-8P1285	200JJ390830UL		**Except <DD1N>**	1
P7201	FFC	NCFC4-26043	204426043			1
P9102	SOCKET AS	NSAS-16P1271	20044191615UL	N		1
P9103	SOCKET AS	NSAS-8P1274	20044190840UL	N		1
P9104	SOCKET AS	NSAS-22P1269	20044192210UL	N		1
P9601	SOCKET AS	NSAS-24P1268	20044192445UL	N		1
P9602	SOCKET AS	NSAS-28P1275	20044192845UL	N		1
P9604	SOCKET AS	NSAS-30P1341	20044193005UL	N		1
T901	P TRANS	NPT-1489D	2301731	N	**<DC1N>**	1
T901	P TRANS	NPT-1489DG	2301733		**<WT3P>**	1
T901	P TRANS	NPT-1489P	2301732		**<PP2P>**	1
T901	P TRANS	NPT-1489DG	2301733		**<GK3P> <GR6P>**	1
U01	DVD Main board AS	NADG-8257-1A	1H516557-1A	N	**All Destinations**	1
U02	Video output terminal PC board AS	NAVD-8258-1G	1H516558-1G	N	**<DC1N>**	1
U02	Video output terminal PC board AS	NAVD-8258-1J	1H516558-1J	N	**<WT3P>**	1
U02	Video output terminal PC board AS	NAVD-8258-1H	1H516558-1H	N	**<PP2P>**	1
U02	Video output terminal PC board AS	NAVD-8258-1P	1H516558-1P	N	**<GR6P>**	1
U03	DVD Main CPU PC board AS	NADG-8259-1G	1H516559-1G	N	**<DC1N>**	1
U03	DVD Main CPU PC board AS	NADG-8259-1J	1H516559-1J	N	**<WT3P>**	1
U03	DVD Main CPU PC board AS	NADG-8259-1H	1H516559-1H	N	**<PP2P>**	1
U03	DVD Main CPU PC board AS	NADG-8259-1P	1H516559-1P	N	**<GR6P>**	1
U04	Component output terminal PC board AS	NAETC-8260-1J	1H516560-1J	N	**<WT3P>**	1
U04	Component output terminal PC board AS	NAETC-8260-1H	1H516560-1H	N	**<PP2P>**	1
U04	Component output terminal PC board AS	NAETC-8260-1P	1H516560-1P	N	**<GR6P>**	1
U05	Component output terminal PC board AS	NAETC-8261-1G	1H516561-1G	N	**<DC1N>**	1
U06	Power supply PC board-3 AS	NAPS-8274-1G	1H516574-1G	N	**<DC1N>**	1
U06	Power supply PC board-3 AS	NAPS-8274-1J	1H516574-1J	N	**<WT3P>**	1
U06	Power supply PC board-3 AS	NAPS-8274-1H	1H516574-1H	N	**<PP2P>**	1
U06	Power supply PC board-3 AS	NAPS-8274-1P	1H516574-1P	N	**<GR6P>**	1
U07	Display PC board AS	NADIS-8264-1D	1H516564-1D	N	**<DC1N>**	1
U07	Display PC board AS	NADIS-8264-1F	1H516564-1F	N	**<WT3P> <GK3P> <GR6P>**	1
U07	Display PC board AS	NADIS-8264-1E	1H516564-1E	N	**<PP2P>**	1

U08	Component/ D-terminal/ SCART terminal board AS	NAVD-8265-1D	1H516565-1D	N	**<DC1N>**	1
U08	Component/ D-terminal/ SCART terminal board AS	NAVD-8265-1F	1H516565-1F	N	**<WT3P> <GK3P> <GR6P>**	1
U08	Component/ D-terminal/ SCART terminal board AS	NAVD-8265-1E	1H516565-1E	N	**<PP2P>**	1
U09	Audio output PC board AS	NAAF-8266-1D	1H516566-1D	N	**<DC1N>**	1
U09	Audio output PC board AS	NAAF-8266-1F	1H516566-1F	N	**<WT3P> <GK3P> <GR6P>**	1
U09	Audio output PC board AS	NAAF-8266-1E	1H516566-1E	N	**<PP2P>**	1
U10	JOG Switch PC board AS	NASW-8267-1D	1H516567-1D	N	**<DC1N>**	1
U10	JOG Switch PC board AS	NASW-8267-1F	1H516567-1F	N	**<WT3P> <GK3P> <GR6P>**	1
U10	JOG Switch PC board AS	NASW-8267-1E	1H516567-1E	N	**<PP2P>**	1
U12	Power supply PC board-1 AS	NAPS-8269-1G	1H516569-1G	N	**<DC1N>**	1
U12	Power supply PC board-1 AS	NAPS-8269-1C	1H516569-1C	N	**<WT3P>**	1
U12	Power supply PC board-1 AS	NAPS-8269-1B	1H516569-1B	N	**<PP2P>**	1
U12	Power supply PC board-1 AS	NAPS-8269-1I	1H516569-1I	N	**<GK3P> <GR6P>**	1
U13	Power supply PC board-2 AS	NAPS-8270-1G	1H516570-1G	N	**<DC1N>**	1
U13	Power supply PC board-2 AS	NAPS-8270-1C	1H516570-1C	N	**<WT3P>**	1
U13	Power supply PC board-2 AS	NAPS-8270-1B	1H516570-1B	N	**<PP2P>**	1
U13	Power supply PC board-2 AS	NAPS-8270-1I	1H516570-1I	N	**<GK3P> <GR6P>**	1
U14	Power switch PC board AS	NASW-7271-1C	1H516570-1C	N	**<WT3P>**	1
U14	Power switch PC board AS	NASW-7271-1B	1H516570-1B	N	**<PP2P>**	1
U14	Power switch PC board AS	NASW-7271-1I	1H516570-1I	N	**<GK3P> <GR6P>**	1
U15	Digital video processor PC board AS	NADG-8272-1B	1H516572-1B	N	**<DC1N>**	1
U15	Digital video processor PC board AS	NADG-8272-1C	1H516572-1C	N	**<PP2P> <WT3P> <GK3P> <GR6P>**	1
U18	Audio DAC PC board AS	NAAR-8263-1B	1H516563-1B	N	**<DC1N> <WT3P> <GK3P>**	1
U18	Audio DAC PC board AS	NAAR-8263-1E	1H516563-1E	N	**<PP2P>**	1
U18	Audio DAC PC board AS	NAAR-8263-1G	1H516563-1G	N	**<GR6P>**	1
U19	IEEE1394 terminal PC board AS	NADG-8468-1G	1H516568-1G	N	**<GR6P>**	1
U20	IEEE1394 terminal PC board AS	NADG-8262-1	1H516562-1	N		1
U21	Power supply unit	NGPS-0036-100-120V	24150036	**!**	**<DC1N>**	1
U21	Power supply unit	NGPS-0037-100-240V	24150037	**!**	**Except <DC1N>**	1
Z701	SCREW	3TTW+8B(BC)	831430088		Z711	4
Z710	DVD M	KHM-280AAA	24801016			1
Z711	LOADER MACHA	MGD-33	24801022	N		1
Z712	HOLDER	(PU)	24826029		Z710	1
Z713	WASHER	W2.6X7.5	87760309	N		2
Z714	ST SCREW	2.6TTB+6B(BC)	838426068			2
Z715	INSULATOR	(A)	24818055		REAR	2
Z716	INSULATOR	(C)	24818061	N	FRONT	2
Z717	CUSHION	(MARU)	28141584			2

Z720	SCREW	(A)	801589		Z715, Z716	4
Z723	CUSHION	CUSHION	28140803		Z711	1
Z725	LABEL (DVD2)	..	29362648		RE(MPWB)	1
Z727	CUSHION	T4L100D10	28141565	N	M.COVER	1

PACKING VIEW PARTS LIST

DV-SP1000

REF. NO.	PART NAME	DESCRIPTION	PART NO.		REMARKS	
A501	PAD	(AS)	29092145	N		1
A502	CARTON	1000(B)	29054139	N	**(B) <DC1N>**	1
A502	CARTON	1000(B)UWT	29054245	N	**(B) <WT3P>**	1
A502	CARTON	1000(S)	29054145	N	**(S) <DC1N>**	1
A502	CARTON	1000(G)	29054146	N	**(G) <WT3P> <GK3P>**	1
A502	CARTON	DV-SP1000E(B)	29054169	N	**(B) <PP2P>**	1
A502	CARTON	DV-SP1000E(S)	29054170	N	**(S) <PP2P>**	1
A502	CARTON	UGR	29054289	N	**(G) <GR6P>**	1
A505	UPC LABEL	DV-SP1000(B)	29363623	N	**(B) <DC1N>**	1
A505	UPC LABEL	DV-SP1000(S)	29363624	N	**(S) <DC1N>**	1
A505	EAN LABEL	DV-SP1000(B)	29363618		**(B) <WT3P>**	1
A505	EAN LABEL	DV-SP1000(G)	29363619	N	**(G) <WT3P> <GK3P> <GR6P>**	1
A505	EAN LABEL	DV-SP1000E(B)	29363684	N	**(B) <PP2P>**	1
A505	EAN LABEL	DV-SP1000E(S)	29363685	N	**(S) <PP2P>**	1
A508	CASE	--	29105220	N		1
A509	LABEL	UGK3P	29363648	N	**(G) <GK3P>**	2
A509	LABEL	UWT3P	29363611		**(G) <WT3P>**	2
A510	SHEET	--	29095847			1
A513	TAPE	NITTO NO.29	29110149			1
A515	TAPE	NITTO 3703 W50L100	29110176			1
A600	WRNTY CARD	(ONKYO)	29365090C		**<DC1N>**	1
A601	POLY BAG	350*250, ACCESSARY*2	29100097-1A			2
A602	POLY BAG	350*250, INS MANIAL	29100097-1A		**<PP2P>**	1
A607	POLY BAG	t0.1*70*100, BATTERY	29100217			1
A816	WRNTY CARD	MGR	29365098A		**(G) <GR6P>**	1
E001	INS MANUAL	En(DV-SP1000)	29343646B	N		1
E002	INS MANUAL	Cs	29343889	N	**<GR6P>**	1
E002	INS MANUAL	Ct	29343650	N	**<WT3P>**	1
E002	INS MANUAL	U2FrEs	29343647	N	**<DC1N> <PP2P>**	1
E002	INS MANUAL	U2ItDe	29343648	N	**<PP2P>**	1
E002	INS MANUAL	U2NlSv	29343649	N	**<PP2P>**	1
E004	INST SHEET	U4	29355485	N	**<DC1N> <PP2P>**	1
E005	INST SHEET	U6	29355490	N	**<DC1N> <PP2P>**	1
E005	INST SHEET	Ct	29355491		**<WT3P>**	1
E005	INST SHEET	Cs	29355492	N	**<GR6P>**	1
E006	INST SHEET	En	29355487B	N		1
E010	INST SHEET	En	29355502	N		1
E010	INST SHEET	Fr	29355503	N	**<DC1N>**	1
E010	INST SHEET	Ct	29355505	N	**<WT3P>**	1
E010	INST SHEET	Cs	29355506	N	**<GR6P>**	1

E010	INST SHEET	U6	29355507	N	**<PP2P>**	1
E301	PIN CORD AS	RCA3P(YWR)1.5MT	2010388			1
E302	CORD AS	MINIDIN4P1.5MT	2010389			1
E303	REMO CON	RC-563DV	24140563	N		1
E305	CORD AS	IEEE1394 1.0M	2010430	N		1
E306	CORD AS	HDMI 1.5M	2010429	N		1
E307	BATTERY	LR6/AA(UM-3)	3010358			3
E308	CORD AS	3.5-MINI PLUG	2010375			1
E308 or	CORD AS	RI CORD	2010397			(1)
E311	LABEL	(PE-LD) HDMI POLY	29361573			1
E901	AC CORD	AS-CCC	253358VOL	**!**	**<GR6P>**	1
E901	AC CORD	AS-CEE-3	253298KAW	**!**	**<PP2P> <WT3P> <GK3P>**	1
E901	AC CORD	AS-UC-2	253297KAW	**!**	**<DC1N>**	1
E902	CV PLUG	CV-K-1	25056005	!	**<WT3P>**	1
E903	RGB CORD	YAF11-1128R	2010411		**<PP2P>**	1

NOTE: The components identifies by mark ! are critical for risk of fire and electric shock. Replace only with part number specified.

NOTE: **!:** Safety parts
<DC1N>: North American and Canadian region
<PP2P>: European region
<GK3P>: Korean region
<WT3P>: East Asian region
<GR6P>: Chinese region

PWB

DG8257	P002	PWB	NCDG-8257	1
VD8258	P002	PWB	NCVD-8258	1
VD8258-1P	P002	PWB	NCVD-8258	1
VD8258	P011	PWB	NCDG-8259	{ 1}
VD8258	P012	PWB	NCETC-8260	{ 0}
VD8258-1J	P012	PWB	NCETC-8260	{ 1}
VD8258-1P	P012	PWB	NCETC-8260	{ 1}
VD8258-1H	P012	PWB	NCETC-8260	{ 1}
VD8258	P013	PWB	NCETC-8261	{ 0}
VD8258-1G	P013	PWB	NCETC-8261	{ 1}
VD8258	P014	PWB	NCPS-8274	{ 1}
DIS8264	P001	PWB	NCDIS-8264	{ 1}
DIS8264	P002	PWB	NCVD-8265	{ 0}
DIS8264-1D	P002	PWB	NCVD-8265	1
DIS8264-1E	P002	PWB	NCVD-8265	{ 1}
DIS8264-1F	P002	PWB	NCVD-8265	{ 1}
DIS8264	P003	PWB	NCAF-8266	{ 1}
DIS8264	P004	PWB	NCSW-8267	{ 1}
DIS8264	P005	PWB	NCDG-8268	{ 0}
DIS8264-1F	P005	PWB	NCDG-8268	{ 0}
PS8269	P004	PWB	NCPS-8269	1
PS8269	P005	PWB	NCPS-8270	{ 1}
PS8269-1G	P006	PWB	NCSW-8271	{ 0}
PS8269-1B	P006	PWB	NCSW-8271	{ 1}
PS8269-1C	P006	PWB	NCSW-8271	{ 1}

PS8269-1I	P006	PWB	NCSW-8271	{ 1}
DG8272-1B	P0010	PWB	NCVD-8273	{ 0}
DG8272-1C	P0010	PWB	NCVD-8273	{ 0}
DG8272	P005	PWB	NCDG-8272	1
AR8263	P001	PWB	NCAR-8263	1
AR8263	P002	PWB	NCDG-8262	{ 0}
AR8263-1G	P002	PWB	NCDG-8468	{ 1}
DG8262	P002	PWB	NCDG-8262	1

ONKYO CORPORATION
Sales & Product Planning Div. : 2-1, Nisshin-cho, Neyagawa-shi, OSAKA 572-8540, JAPAN
Tel: 072-831-8023 Fax: 072-831-8124

ONKYO U.S.A. CORPORATION
18 Park Way, Upper Saddle River, N.J. 07458, U.S.A.
Tel: 201-785-2600 Fax: 201-785-2650 http://www.us.onkyo.com/

ONKYO EUROPE ELECTRONICS GmbH
Liegnitzerstrasse 6, 82194 Groebenzell, GERMANY
Tel: +49-8142-4401-0 Fax: +49-8142-4401-555 http://www.eu.onkyo.com/

ONKYO EUROPE UK Office
Suite 1, Gregories Court, Gregories Road, Beaconsfield, Buckinghamshire, HP9 1HQ
UNITED KINGDOM Tel: +44-(0)1494-681515 Fax: +44(0)-1494-680452

ONKYO CHINA LIMITED
Units 2102-2107, Metroplaza Tower I, 223 Hing Fong Road, Kwai Chung,
N.T., HONG KONG Tel: 852-2429-3118 Fax: 852-2428-9039
http://www.ch.onkyo.com/

ONKYO
HOMEPAGE
http://www.onkyo.com/