Ref. No.3619
071999

ONKYO® SERVICE MANUAL

CD/MD RECEIVER

MODEL FR-435

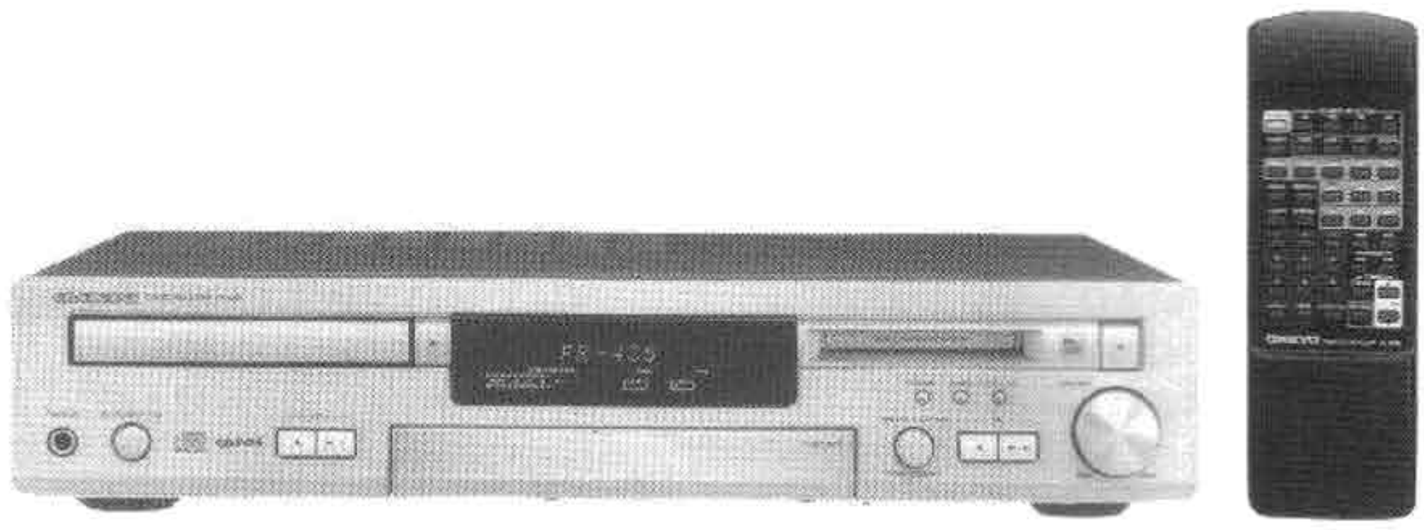

Silver model

UP	230V AC, 50Hz
UDT	120V AC, 60Hz

SAFETY-RELATED COMPONENT WARNING!!

COMPONENTS IDENTIFIED BY MARK ⚠ ON THE SCHEMATIC DIAGRAM AND IN THE PARTS LIST ARE CRITICAL FOR RISK OF FIRE AND ELECTRIC SHOCK. REPLACE THESE COMPONENTS WITH ONKYO PARTS WHOSE PARTS NUMBERS APPEAR AS SHOWN IN THIS MANUAL.

MAKE LEAKAGE-CURRENT OR RESISTANCE MEASUREMENTS TO DETERMINE THAT EXPOSED PARTS ARE ACCEPTABLY INSULATED FROM THE SUPPLY CIRCUIT BEFORE RETURNING THE APPLIANCE TO THE CUSTOMER.

ONKYO®
AUDIO COMPONENTS

TABLE OF CONTENTS

Specifications	2
Protection of eyes from laser beam during servicing	3
Service procedures	4
Replacement of optical pick up	5
Index to parts and controls	6
Microprocessor terminal descriptions	8
IC block diagram and descriptions	12
CD adjustment procedures	20
Tuner adjustment procedures	21
MD mechanism disassembly	22
MD mechanism adjustment	25
MD message list	28
Wiring view	29
Block diagram	31
PC board view from bottom side(NCAR-6535)	33
Schematic diagram (Amp.)	35
PC board view from bottom side(NCRF-6538)	37
Schematic diagram (Tuner.)	39
PC board view from bottom side(NCDG-6542)	41
Schematic diagram (CD.)	43
PC board view from bottom side(NCDG-6542)	45
Schematic diagram (MD.)	47
MD mechanism exploded view	49
CD mechanism exploded view	51
Chassis exploded view	53
Chassis exploded view parts list	55
PC board parts list	56
Packing view	60
Assemble the packing form	61

SPECIFICATIONS

General

Power supply	AC 230 V, 50 Hz AC 120 V, 60 Hz
Power consumption	110 W
Dimensions (W × H × D)	435 × 90 × 420 mm
Weight	8.4 kg

Amplifier

Power output	2 × 43 W at 4 Ω 1kHz DIN 2 × 36 W at 6 Ω 1kHz DIN 2 × 32 W at 8 Ω 1kHz DIN 2 × 31 W min, RMS at 8 Ω 1 kHz no more than 0.2 % THD 2 × 50 W at 4 Ω EIAJ
Dynamic power	2 × 60 W at 4 Ω 2 × 35 W at 8 Ω
Total harmonic distortion	0.2 % at rated power
IM distortion	0.2 % at rated power
Damping factor	40 at 8 Ω
Sensitivity and impedance	TAPE: 200 mV, 50 kΩ LINE-1 IN: 200 mV, 50 kΩ LINE-2 IN: 200 mV, 50 kΩ PROCESSOR IN: 200 mV, 50 kΩ
Frequency response	10 to 50,000 Hz : +0/–3 dB
Tone control	Bass ±8 dB at 100 Hz Treble ±8 dB at 10,000 Hz S. Bass +8 dB at 40 Hz
Signal to noise ratio	TAPE: 100dB (IHF A) LINE-1 IN: 100dB (IHF A) LINE-2 IN: 100dB (IHF A) PROCESSOR IN: 100 dB (IHF A)
Muting	–50 dB

CD player

Signal readout system	Optical non-contact
Frequency response	5 Hz to 20 kHz (± 1.5 dB)
Wow and flutter	Below threshold of measurability

MD recorder

System	MiniDisc digital audio system
Recording system	Magnetic field modulation overwrite system
Signal readout system	Optical non-contact
Recording time	Max. 80 min. (when using a 80 minute recording time disc)
Frequency response	10 Hz to 20 kHz (± 2 dB)
Wow and flutter	Below threshold of measurability

Tuner

Tuning range	87.50 to 108.00 MHz (50 kHz steps)
Usable sensitivity	Mono: 12.8 dBf, 1.2 µV (75 Ω IHF) 1.0 µV (75 Ω DIN) Stereo: 18.0 dBf, 2.2 µV (75 Ω IHF) 25.0 µV (75 Ω DIN)
50 dB quieting sensitivity	Mono: 18.8 dBf, 2.4µV (75 Ω) Stereo: 38.8 dBf, 24.0 µV (75 Ω)
Capture ratio	2.0 dB
Image rejection ratio	85 dB
IF rejection ratio	90 dB
Signal to noise ratio	Mono : 73 dB IHF Stereo : 67 dB IHF
Selectivity	50 dB DIN (±300 kHz at 40 kHz devi.)
Harmonic distortion	Mono: 0.5 % Stereo: 0.8 %
Frequency response	30 to 15,000 Hz (±1.5 dB)
Stereo separation	40 dB at 1,000 Hz 30 dB at 100 to 10,000 Hz

Specifications and features are subject to change without noitce.

CAUTION ON REPLACEMENT OF OPTICAL PICKUP

The laser diode in the optical pickup block is sensitive to static electricity, surge current and etc. The components are liable to be damaged or its reliability remarkably deteriorated.

During repair,carefully take the following precautions. (The following precautions are included in the service parts.)

PRECAUTIONS

1.Ground for the work-desk.
Place a conductive sheet such as a sheet of copper (with impedance lower than 10Mohm) on the work-desk and place the set on the conductive sheet so that the chassis can be grounded.

2.Grounding for the test equipments and tools.
Test equipments and toolings should be grounded in order that their ground level is the same the ground of the power source.

3. Grounding for the human body.
Be sure to put on a wrist-strap that is properly grounded.
Be particularly careful when wearing synthetic fiber clothes, or air is dry.

4. Select a soldering iron that permits no leakage and have the tip of the iron well-grounded.

5. Do not check the laser diode terminals with the probe of a circuit tester or oscilloscope.

PROTECTION OF EYES FROM LASER BEAM DURING SERVICING

This set employs a laser. Therefore, be sure to carefully follow the instructions below when servicing.

WARNING !!

SERVICE WARNING: DO NOT APPROACH THE LASER EXIT WITH THE EYES TOO CLOSELY. IN CASE IT IS NECESSARY TO CONFIRM LASER BEAM EMISSION, BE SURE TO OBSERVE FROM A DISTANCE OF MORE THAN 30cm FROM THE SURFACE OF THE OBJECTIVE LENS ON THE OPTICAL PICK-UP BLOCK.

Laser Diode Properties

Material:	GaAlAs
Wavelenghth:	780nm
Emission Duration:	continuous
Laser output:	max. 5mW*

* This output is the value measure at a distance about 1.8mm from the objective lens surface on the Optical pick-up Block.

LASER WARNING LABEL

These labels are located on the mechanism.

The label shown below are affixed.

1. Warning label

DANGER —INVISIBLE LASER RADIATION WHEN OPEN AND INTERLOCK FAILED OR DEFEATED. AVOID DIRECT EXPOSURE TO BEAM.

CAUTION —HAZARDOUS LASER AND ELECTROMAGNETIC RADIATION WHEN OPEN AND INTERLOCK DEFEATED

ATTENTION —RAYONNEMENT LASER ET ELECTROMAGNETIQUE DANGEREUX SI OUVERT AVEC L'ECLENCHEMENT DE SECURITE ANNULE

2. Class 1 label

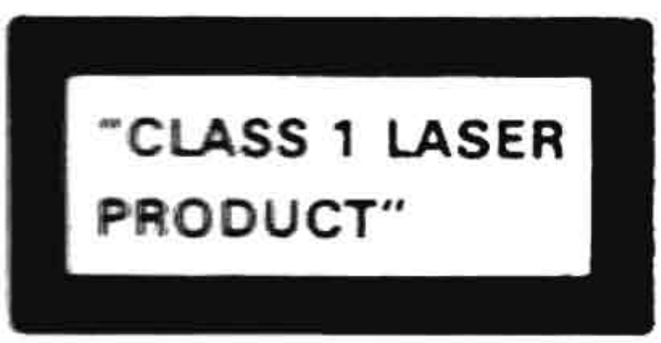

LUOKAN 1
LASERLAITE

KLASS 1
LASER APPARAT

SERVICE PROCEDURES

1. Replacing the fuses

This symbol located near the fuse indicates that the fuse used is fast operating type. For continued protection against fire hazard, replace with same type fuse. For fuse rating refer to the marking adjacent to the symbol.

Ce symbole indique que le fusible utlise est a rapide. Pour une protection permanente, n'utiliser que des fusibles de meme type. Ce darnier est indique la qu le present symbol est appose.

CIRCUIT NO.	PART NO.	DESCRIPTION
F901	252070	1A-SE-EAK ,Primary<P>
	252148	2A-TSC,Primary<DT>

NOTE : <P>230V model only
<DT>Taiwanese model only

2. To Initialize the unit

This device employs a microprocessor to perform various functions and operations. If interference generated by an external. power supply, radio wave, or other electrical source results in accident which causes the specified operations and functions to operate abnormally.

To perform a result, please follow the procedure below.

1.Press and hold down the CD STOP button, then press the STAND-BY batten.
2.Unplug the AC plug from wall outlet in the state of power on.
3.After "All lighting" is displayed, the preset memory and each mode stored in the memory, are initialized and will return to the factory settings.

3. Safety-check out

After correcting the original service problem, perform the following safety check before releasing the set to the customer. Connect the insulating-resistance tester between the plug of power supply cord and the screw on the back panel.

Specifications: More than 10 MΩ at 500V.

4. Memory preservation

This unit does not require memory preservation batteries.

A built-in memory power back-up system preserves contents of the memory during power failures and even when the unit is unplugged.

The unit must be plugged in and the power switch turned on and off once in order to charge the back-up system. Note that since this is not a permanent memory, the power switch must be turned on and off a few times each month the keep the back-up system operative.

The period of the time during which memory contents are preserved after power has last been turned off varies depending on climate and placement of the unit. On the average, memory contents are protected over a period of 3 to 4 weeks (a minimum of 2 weeks) after the last time power has been turned off. This period is shorted when the unit is exposed to very high humidity or used in an area with an extremely humid climate.

REPLACEMENT OF OPTICAL PICKUP

The laser diode in the optical pickup block is so sensitive to static electricity,surge current and etc.
That the components are liable to be broken down or its reliability remarkably deteriorated.
During repair,carefully take the following precautions.
Do not touch the optical pickup object lens with the hands.

1. Connect J803(or LD short terminal 2) on CD Connector PC board first when you replace an optical pickup
2. Remove socket P351 which connects the CD Connector PC board with the Main circuit PC board.
3. Solder the LD terminal 1 on mechanism.
4. Disconnect the flexible flat cable P352.
5. Replace the optical pickup.
6. Connect the flexible flat cable P352.
7. Unsolder the LD terminal 1 on mechanism.
8. Connect the socket P351 between CD Connector and Main circuit PC boards.
9. Cut J803.(or Unsolder the LD terminal 2)

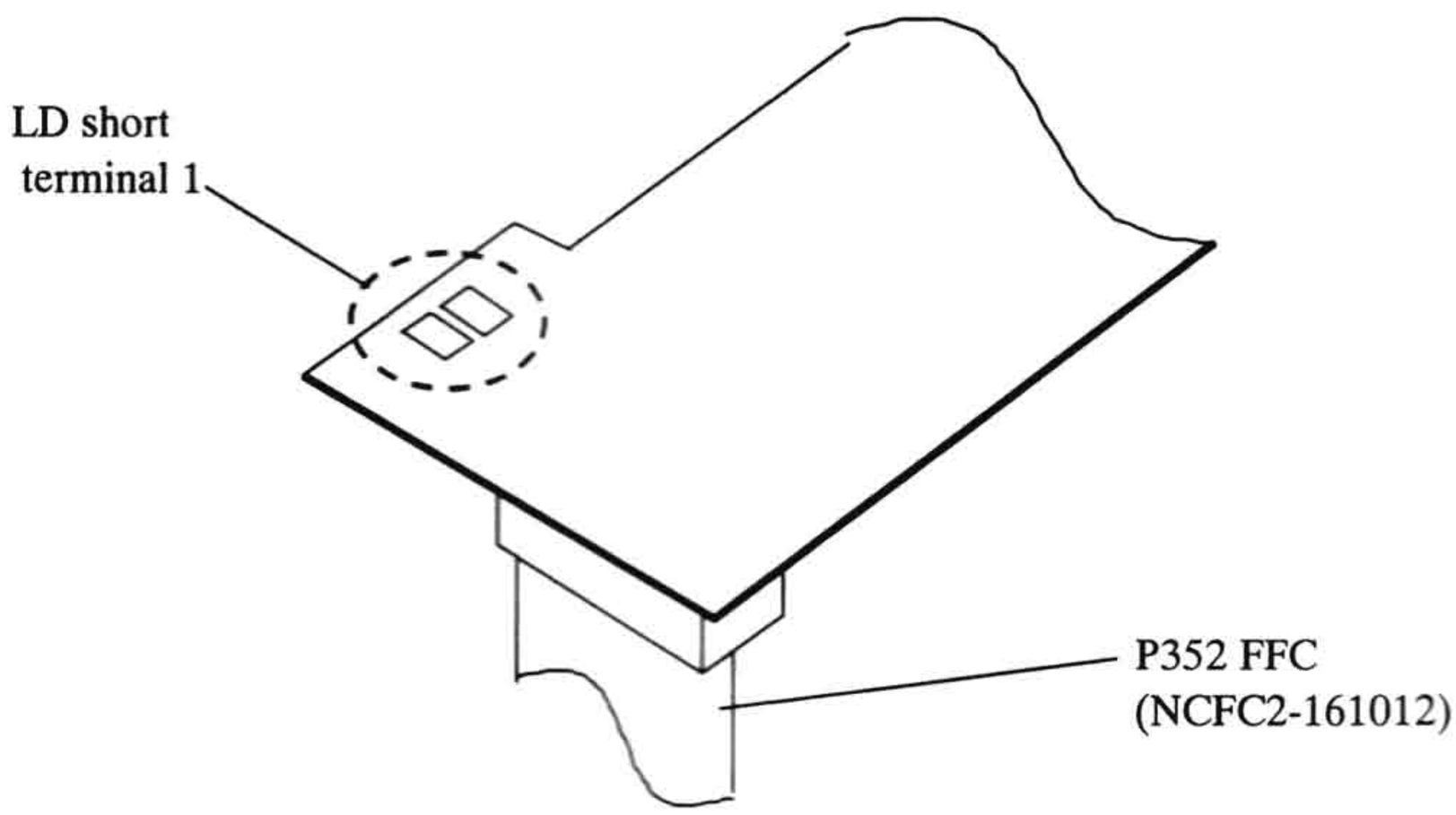

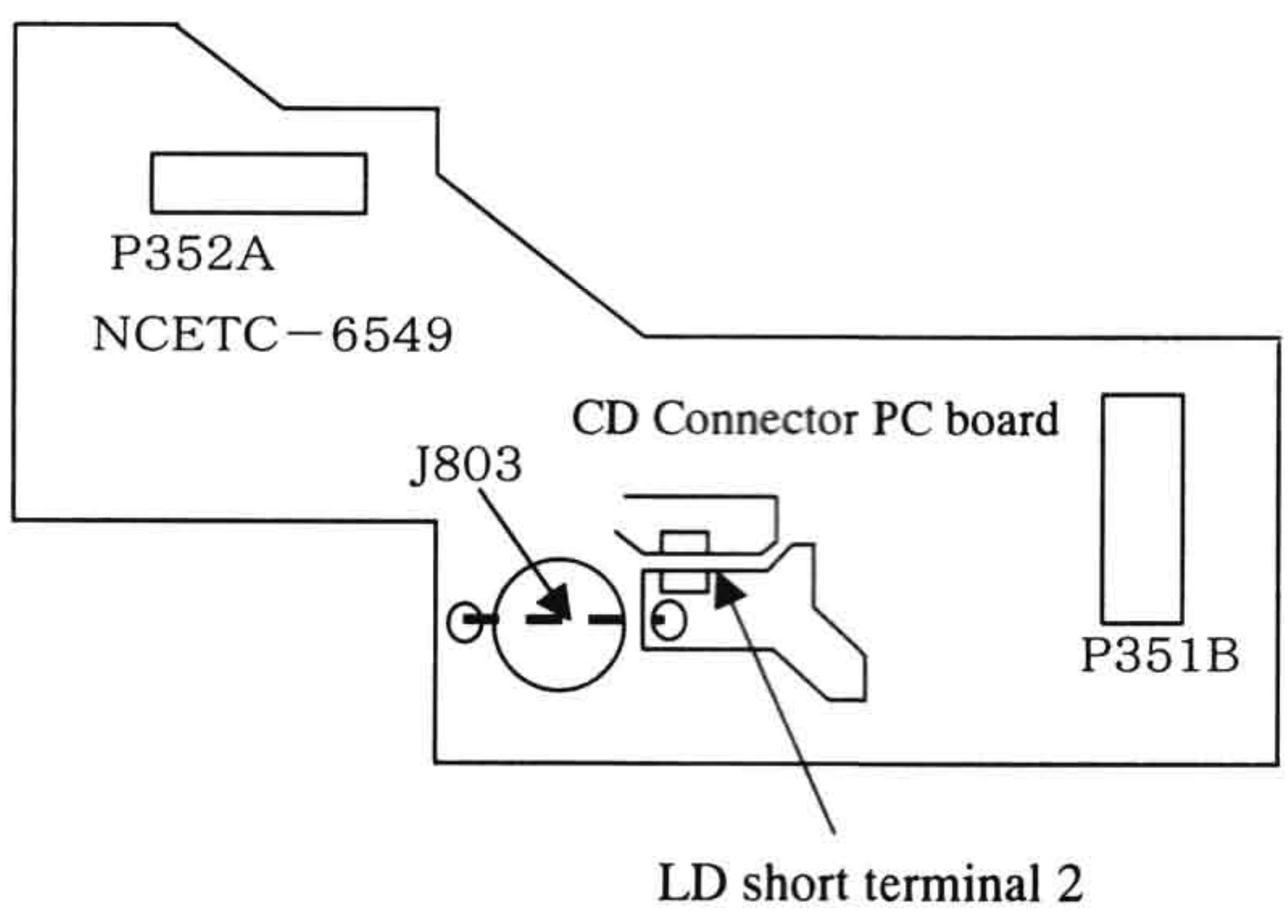

INDEX TO PARTS AND CONTROLS

FRONT PANEL

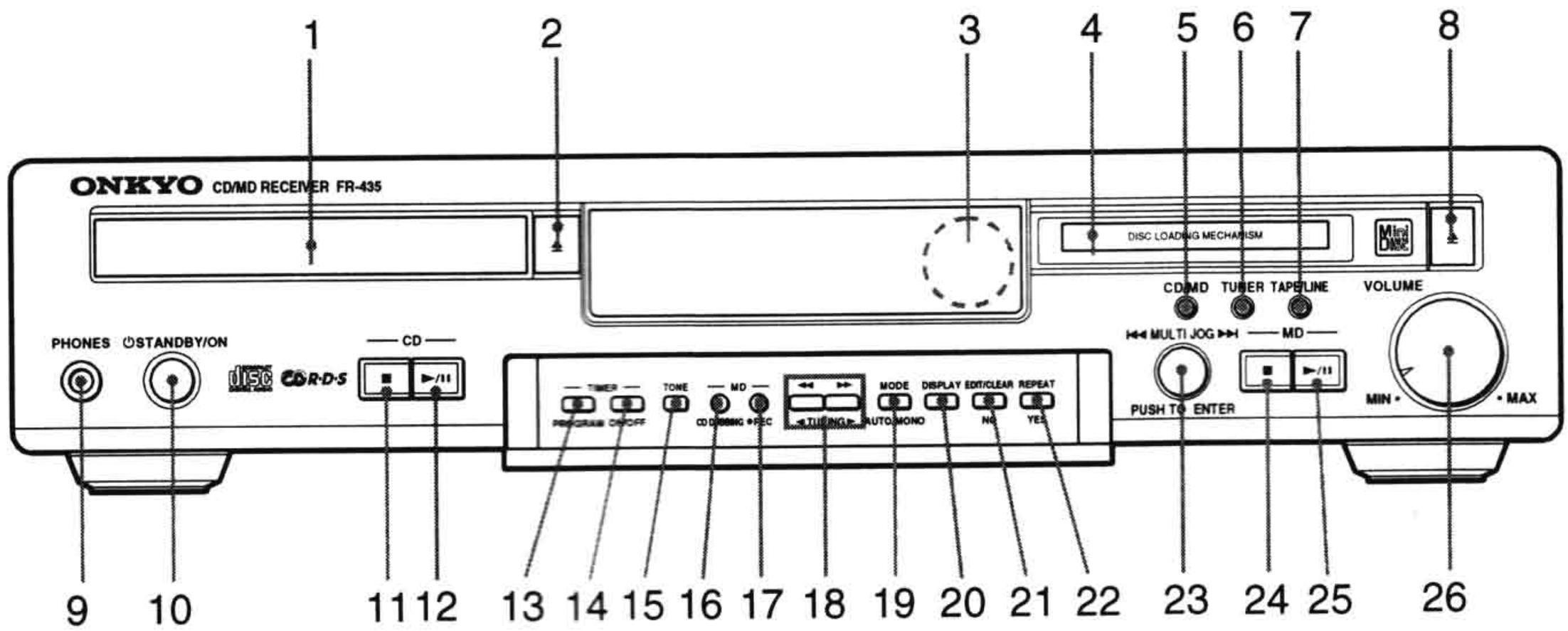

1 CD disc tray
2 CD ▲ button
3 Remote control sensor
4 MD disc slot
5 CD/MD button
6 TUNER button
7 TAPE/LINE button
8 MD ▲ button
9 PHONES jack
10 STANDBY/ON button
11 CD ■ button
12 CD ▶/❚❚ button
13 TIMER PROGRAM button
14 TIMER ON/OFF button
15 TONE button
16 MD CD DUBBING button
17 MD ● REC button
18 ◀◀/▶▶ buttons
TUNING ◀/▶ buttons
19 MODE button
AUTO/MONO button
20 DISPLAY button
21 EDIT/CLEAR/NO button
22 REPEAT/YES button
23 MULTI JOG dial
24 MD ■ button
25 MD ▶/❚❚ button
26 VOLUME control

REAR PANEL

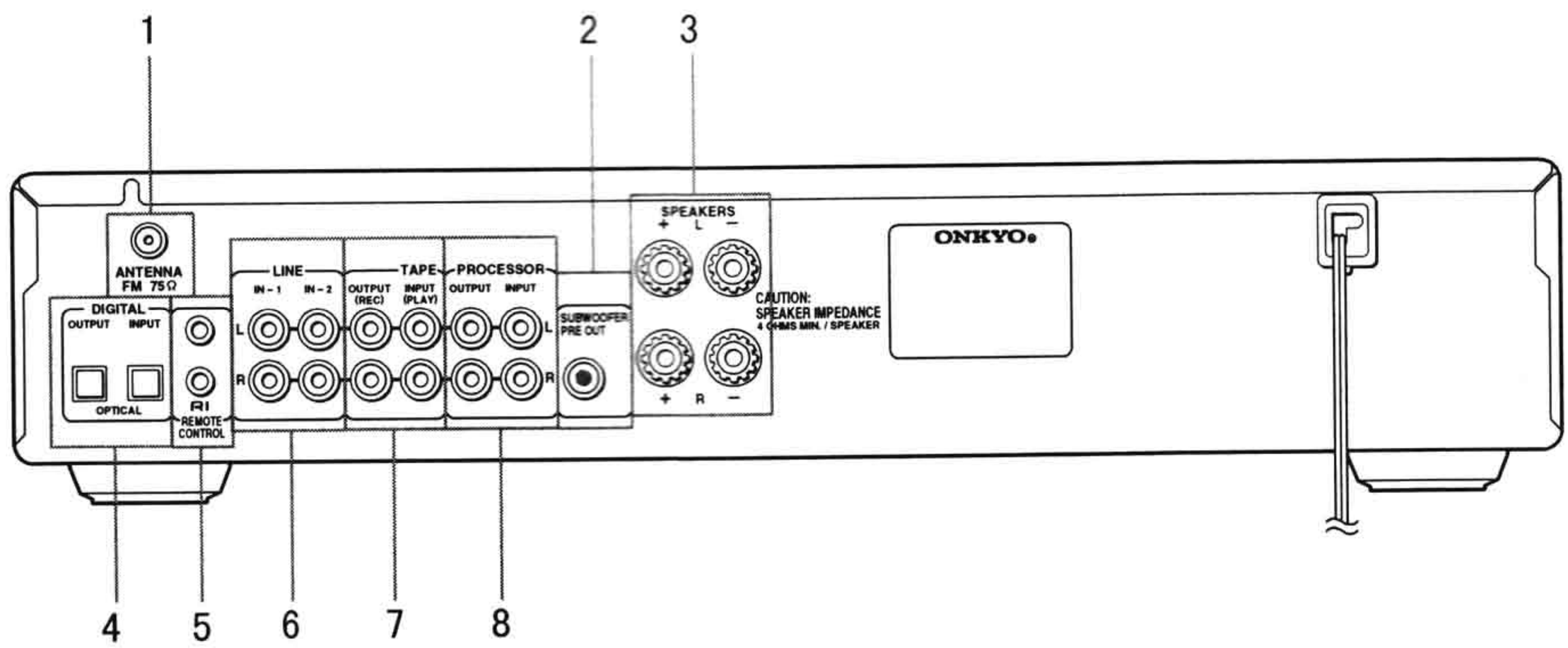

1 Antenna (aerial) connector
2 Subwoofer connector
3 Speaker connectors
4 Optical digital audio connectors
5 RI REMOTE CONTROL connectors
6 Jack for the another system
7 Jack for the tape deck
8 Jack for the sound processor

DISPLAY

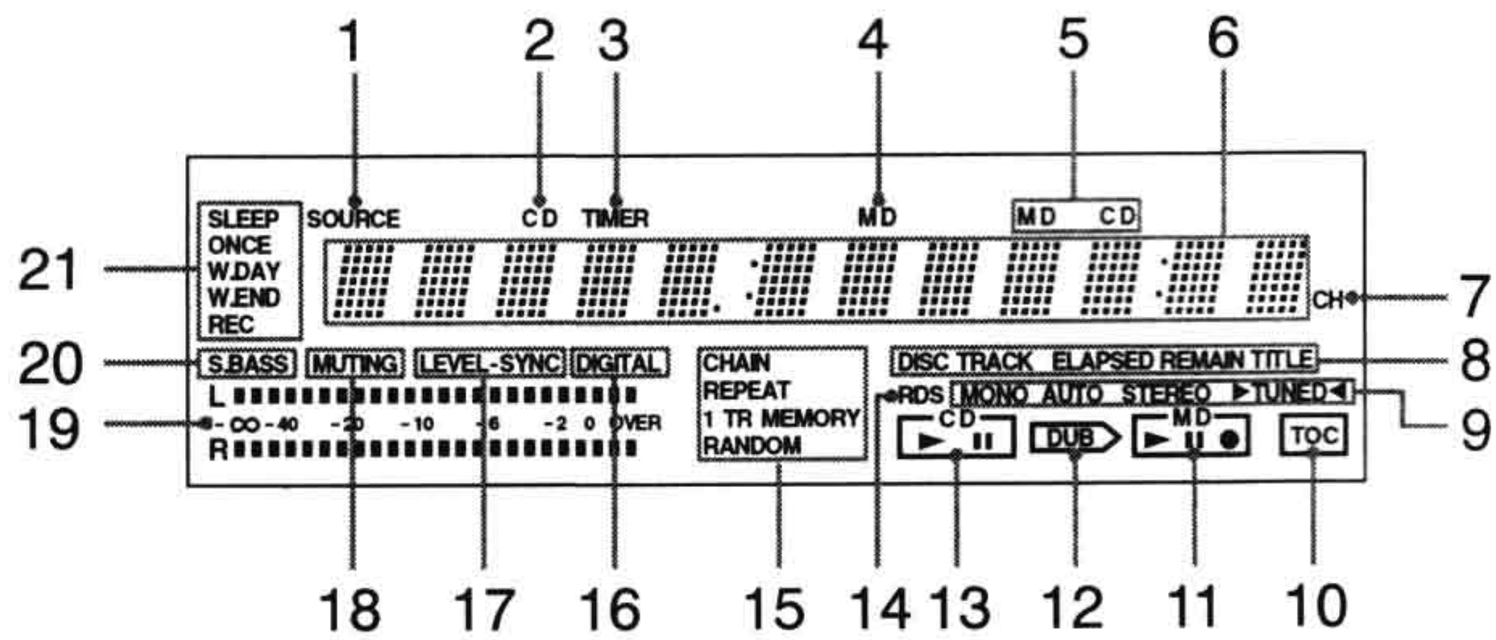

When lit, the 1 to 5 indicators show what the muli-purpose display (6) under them is currently displaying.

1 SOURCE indicator
2 CD indicator
3 TIMER indicator
4 MD indicator
5 MD/CD setting indicators
6 Multi-purpose display
7 CH (channel) indicator
8 When lit, the indicators show what the mulit-purpose display (6) above them is currently displaying.
9 Indicators for radio frequency information
10 TOC indicator
11 MD operation indicators
12 DUB indicator
13 CD operation indicators
14 RDS indicator
15 Playback mode indicator
16 DIGITAL indicator
17 LEVEL-SYNC indicator
18 MUTING indicator
19 Recording level indicator
20 S.BASS indicator
21 Timer indicators

REMOTE CONTROLLER

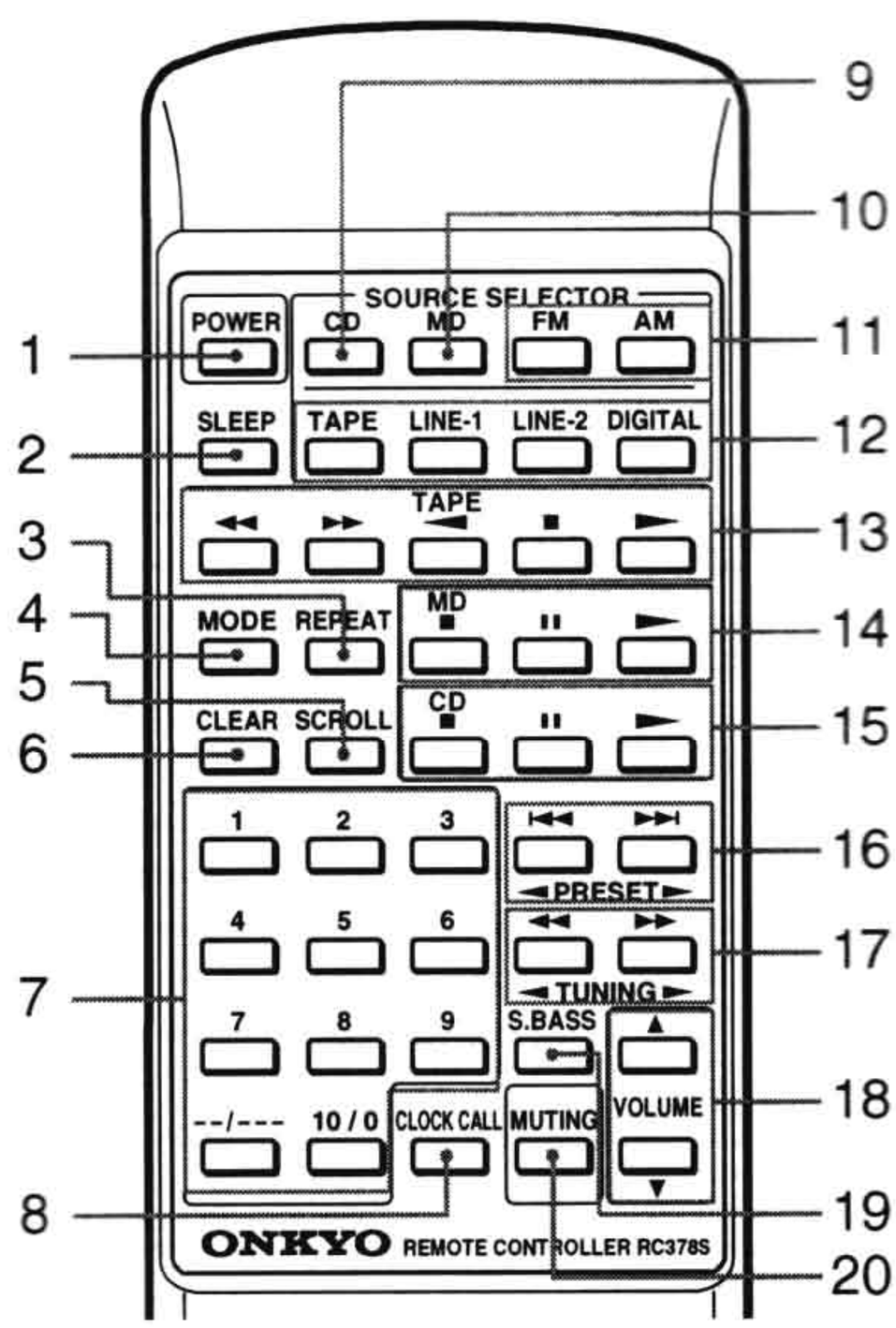

1 POWER button
2 SLEEP button
3 REPEAT button
4 MODE button
5 SCROLL button
6 CLEAR button
7 Number buttons
8 CLOCK CALL button
9 CD button
10 MD button
11 FM button (The AM button doesn't operate for this unit)
12 TAPE/LINE-1/LINE-2/DIGITAL buttons
13 Operation buttons for an ONKYO stereo cassette tape deck
14 MD operation buttons
15 CD operation buttons
16 ⏮/⏭ buttons
PRESET ◀/▶ buttons
17 ◀◀/▶▶ buttons
TUNING ◀/▶ buttons
18 VOLUME ▲/▼ buttons
19 S.BASS button
20 MUTING button

MICROPROCESSOR TERMINAL DESCRIPTIONS
Q701: μPD780058GC-086-8BT

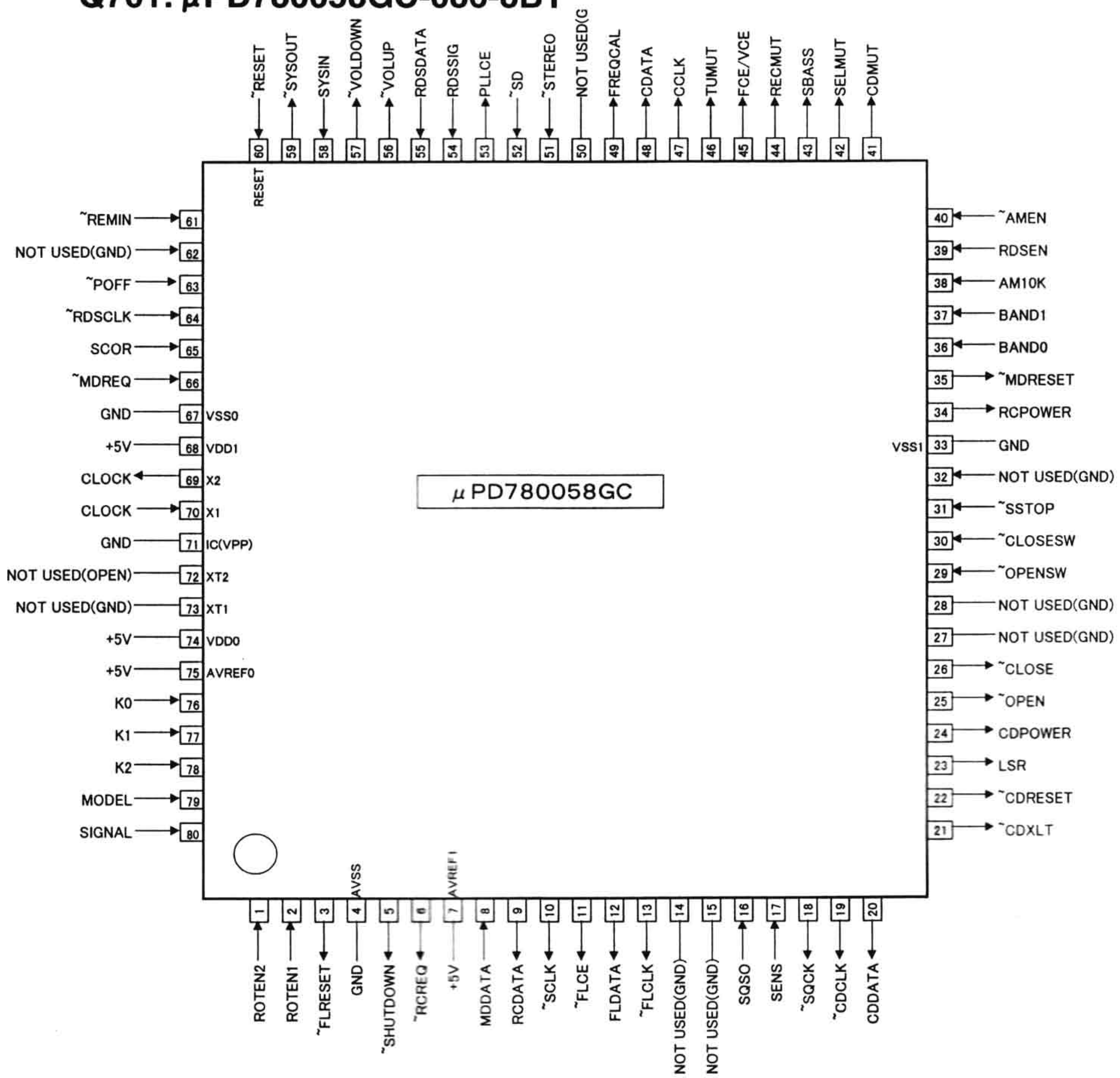

PIN No.	SYMBOL	I/O	DESCRIPTION
1	ROTEN2	I	Pulse input terminal for rotary-encoder
2	ROTEN1	I	Pulse input terminal for rotary-encoder
3	$\overline{\text{FLRESET}}$	O	Reset signal output terminal to FL tube controller
4	GND	I	Power supply terminal (to GND)
5	$\overline{\text{SHUTDOWN}}$	O	Power failure notification output terminal to MD microprocessor
6	$\overline{\text{RCREQ}}$	O	Serial transfer demand output terminal to MD microprocessor
7		I	Power supply terminal for A/D port
8	MDDATA	I	Serial transfer data input terminal from MD microprocessor
9	RCDATA	O	Serial transfer data output terminal to MD microprocessor
10	$\overline{\text{SCLK}}$	O	Serial transfer clock output terminal with MD microprocessor
11	$\overline{\text{FLCE}}$	O	Chip selection signal output terminal to FL tube driver
12	FLDATA	O	Data output terminal to FL tube driver
13	$\overline{\text{FLCLK}}$	O	Clock output terminal to FL tube driver
14	TXD	O	Transmission terminal for flash ROM writing(opening)
15	RXD	I	Reception terminal for flash ROM writing(opening)
16	SQSO	I	Sub-code data input terminal from signal processing IC for CD
17	SENS	I	Sense input terminal from signal processing IC for CD
18	$\overline{\text{SQCK}}$	O	Sub-code forwarding clock output terminal to signal processing IC for CD
19	$\overline{\text{CDCLK}}$	O	Command forwarding clock output terminal to signal processing IC for CD
20	CDDATA	O	Command output terminal to signal processing IC for CD

PIN No.	SYMBOL	I/O	DESCRIPTION
21	$\overline{\text{CDXLT}}$	O	Command latch output terminal to signal processing IC for CD
22	$\overline{\text{CDRESET}}$	O	Reset output terminal to signal processing IC for CD
23	LSR	O	Output terminal for laser control of pick up
24	CDPOWER	O	Control output terminal of power supply of circuit in surrounding for CD
25	$\overline{\text{OPEN}}$	O	Output terminal of control signal of motor for tray
26	$\overline{\text{CLOSE}}$	O	Output terminal of control signal of motor for tray
27	SBCK	I	Not used(to GND)
28	SBSO	I	Not used(to GND)
29	$\overline{\text{OPENSW}}$	I	Switch input terminal of tray opening completion
30	$\overline{\text{CLOSESW}}$	I	Switch input terminal of tray close completion
31	$\overline{\text{SSTOP}}$	I	Switch input terminal of surrounding detection the in pick up
32		I	Not used(to GND)
33	GND	I	Power supply terminal(to GND)
34	RCPOWER	O	Power supply control terminal for receiver section
35	$\overline{\text{MDRESET}}$	O	Reset output terminal to MD deck
36	BAND0	I	Initializing terminal for FM band step 0
37	BAND1	I	Initializing terminal for FM band step 1
38	AM10K	I	Initializing terminal for AM channel space
39	RDSEN	I	Initializing terminal for RDS
40	$\overline{\text{AMEN}}$	I	Initializing terminal for AM
41	CDMUT	O	Muting control output terminal for CD analog section
42	SELMUT	O	Muting control output terminal when the selector switch is operated.
43	SBASS	O	Super bass control output terminal
44	RECMUT	O	Muting control output terminal when recording of MD
45	FCE/VCE	O	Latch output terminal for function switch and electrical volume
46	TUMUT	O	Muting output terminal for tuner section
47	CCLK	O	Transfer clock output terminal to receiver control ICs
48	CDATA	O	Transfer data output terminal to receiver control ICs
49	FREQCAL	O	Adjustment terminal for the frequency of main system
50		I	Not used(to GND)
51	$\overline{\text{STEREO}}$	I	FM stereo broadcast detection input terminal
52	$\overline{\text{SD}}$	I	Detection input terminal for broadcast more than muting level
53	PLLCE	O	Chip enable output terminal to PLL IC
54	RDSSIG	I	Signal detection input terminal for RDS broadcast
55	RDSDATA	I	Data input terminal for RDS broadcast
56	$\overline{\text{VOLUP}}$	O	Motor control output terminal of volume
57	$\overline{\text{VOLDOWN}}$	O	Motor control output terminal of volume
58	SYSIN	I	System code input terminal
59	$\overline{\text{SYSOUT}}$	O	System code output terminal
60	$\overline{\text{RESET}}$	I	System reset input terminal
61	$\overline{\text{REMIN}}$	I	Input terminal from remote control
62	WFCK	I	Not used(to GND)
63	$\overline{\text{POFF}}$	I	Detection input terminal for power stoppage
64	$\overline{\text{RDSCLK}}$	I	Clock input terminal from RDS demodulator
65	SCOR	I	Sub code detection input terminal from signal processor of CD
66	$\overline{\text{MDREQ}}$	I	Transfer request input terminal from signal processor of MD
67	GND	I	Power supply terminal (to GND)
68	+5V	I	Power supply terminal (to +5V)
69	CLOCK	O	Clock output terminal (Connect the 5MHz ceramic oscillator between #69and #70)
70	CLOCK	I	Clock output terminal (Connect the 5MHz ceramic oscillator between #69and #70)
71		I	Internal connection terminal
72		O	Not used (open)
73		I	Not used (to GND)
74	+5V	I	Power supply (to +5V)
75	+5V	I	Reference voltage terminal for A/D port
76	K0	I	Operation key connection terminal 1
77	K1	I	Operation key connection terminal 2
78	K2	I	Operation key connection terminal 3
79	MODEL	I	Initializing terminal for model select
80	SIGNAL	I	Detection input terminal for signal strength of tuner

MICROPROCESSOR TERMINAL DESCRIPTIONS

Q202: TMP87CH40F-4E50

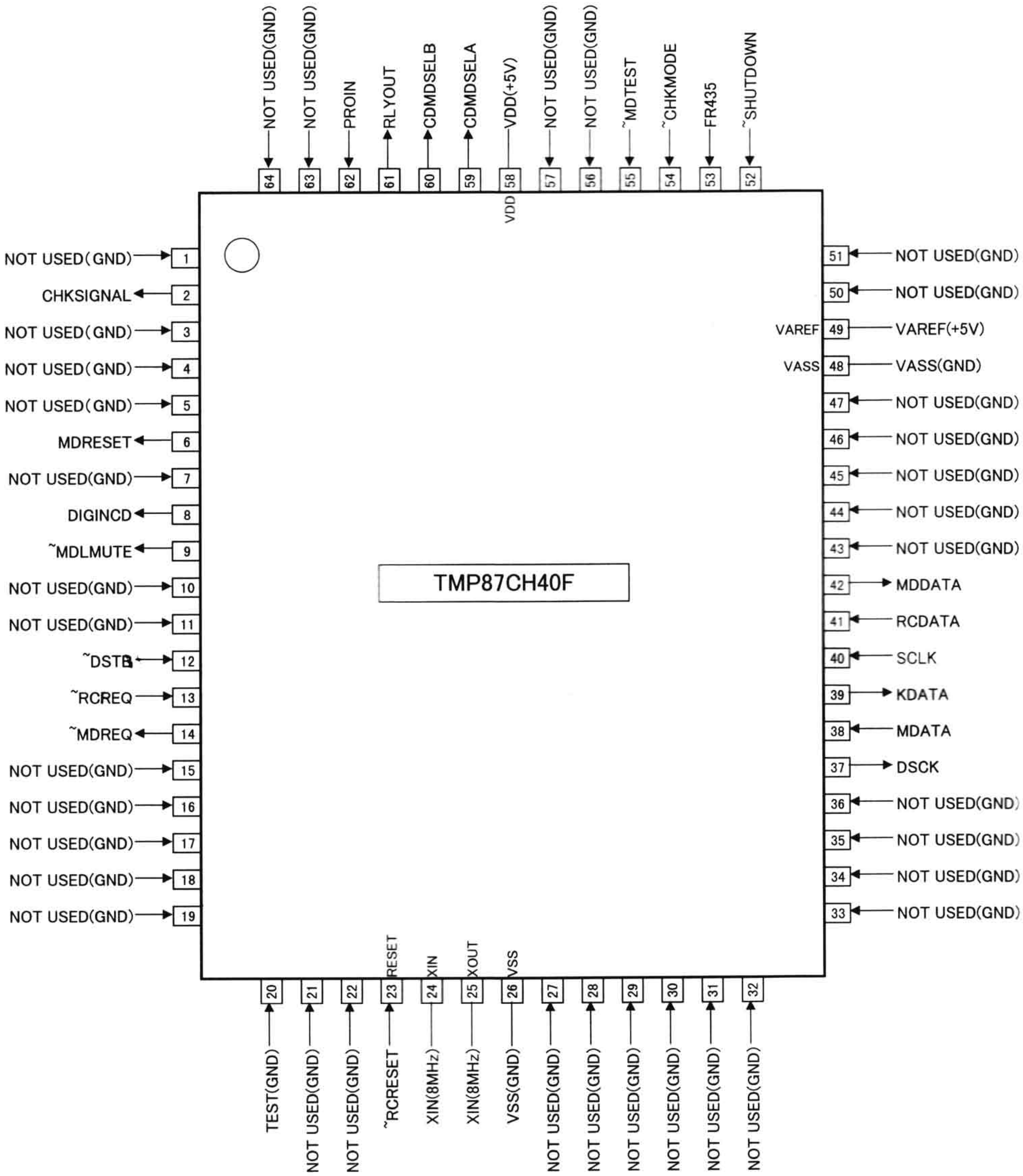

PIN No.	SYMBOL	I/O	DESCRIPTION
1	NOT USED(GND)	I	Not used.(GND)
2	CHKSIGNAL	O	Signal output terminal for MD microcomputer check.
3	NOT USED(GND)	I	Not used.(GND)
4	NOT USED(GND)	I	Not used.(GND)
5	NOT USED(GND)	I	Not used.(GND)
6	MDRESET	O	Reset signal output terminal to mecha microprocessor.
7	NOT USED(GND)	I	Not used.(GND)
8	DIGINCD	O	Digital input select signal output terminal(high:CD)
9	$\overline{\text{MDLMUTE}}$	O	Signal output terminal for LINE MUTE control.
10	NOT USED(GND)	I	Not used.(GND)
11	NOT USED(GND)	I	Not used.(GND)
12	$\overline{\text{DSTB}}$	I	Serial communication terminal to mecha microprocessor.(input terminal)
13	$\overline{\text{RCREQ}}$	I	Serial communication terminal to CR microprocessor.(input terminal)
14	$\overline{\text{MDREQ}}$	O	Serial communication terminal to CR microprocessor.(output terminal)
15	NOT USED(GND)	I	Not used.(GND)
16	NOT USED(GND)	I	Not used.(GND)
17	NOT USED(GND)	I	Not used.(GND)
18	NOT USED(GND)	I	Not used.(GND)
19	NOT USED(GND)	I	Not used.(GND)
20	TEST(GND)	-	Test terminal for microprocessor(to GND)
21	NOT USED(GND)	I	Not used.(GND)
22	NOT USED(GND)	I	Not used.(GND)
23	$\overline{\text{RCRESET}}$	I	System reset signal input terminal for CR microprocessor.
24	XIN(8MHz)	-	Connect to clock
25	XOUT(8MHz)	-	
26	VSS(GND)	-	Power suply terminal(to GND)
27	NOT USED(GND)	I	Not used.(GND)
28	NOT USED(GND)	I	Not used.(GND)
29	NOT USED(GND)	I	Not used.(GND)
30	NOT USED(GND)	I	Not used.(GND)
31	NOT USED(GND)	I	Not used.(GND)
32	NOT USED(GND)	I	Not used.(GND)
33	NOT USED(GND)	I	Not used.(GND)
34	NOT USED(GND)	I	Not used.(GND)
35	NOT USED(GND)	I	Not used.(GND)
36	NOT USED(GND)	I	Not used.(GND)
37	DSCK	O	Serial communication terminal to mecha microprocessor.(output terminal)
38	MDATA	I	Serial communication terminal to mecha microprocessor.(input terminal)
39	KDATA	O	Serial communication terminal to mecha microprocessor.(output terminal)
40	SCLK	I	Clock output terminal for serial communications to CR microprocessor.
41	RCDATA	I	Data input terminal for serial communications to CR microprocessor.
42	MDDATA	O	Data output terminal for serial communications to CR microprocessor.
43	NOT USED(GND)	I	Not used.(GND)
44	NOT USED(GND)	I	Not used.(GND)
45	NOT USED(GND)	I	Not used.(GND)
46	NOT USED(GND)	I	Not used.(GND)
47	NOT USED(GND)	I	Not used.(GND)
48	VASS(GND)	-	Reference voltage terminal for A/D transfer(to GND)
49	VAREF(+5V)	-	Reference voltage terminal for A/D transfer(to +5V)
50	NOT USED(GND)	I	Not used.(GND)
51	NOT USED(GND)	I	Not used.(GND)
52	$\overline{\text{SHUTDOWN}}$	I	Signal output terminal for power failure detection to CR microprocessor.
53	FR435	I	Initializing terminal.
54	$\overline{\text{CHKMODE}}$	I	Input terminal for microcomputer check mode setting.
55	$\overline{\text{MDTEST}}$	I	Input terminal for setting test mode of MD mechanism.
56	NOT USED(GND)	I	Not used.(GND)
57	NOT USED(GND)	I	Not used.(GND)
58	VDD(+5V)	-	Power supply (to +5V)
59	CDMDSELA	O	Output terminal for control of CD/MD selector A switch.
60	CDMDSELB	O	Output terminal for control of CD/MD selector B switch.
61	RLYOUT	O	Output terminal for control of speaker relay.
62	PROIN	I	Input terminal for control of speaker relay.
63	NOT USED(GND)	I	Not used.(GND)
64	NOT USED(GND)	I	Not used.(GND)

IC BLOCK DIAGRAM AND DESCRIPTIONS

Q401:TC9273N-0072
(Analog Switch)

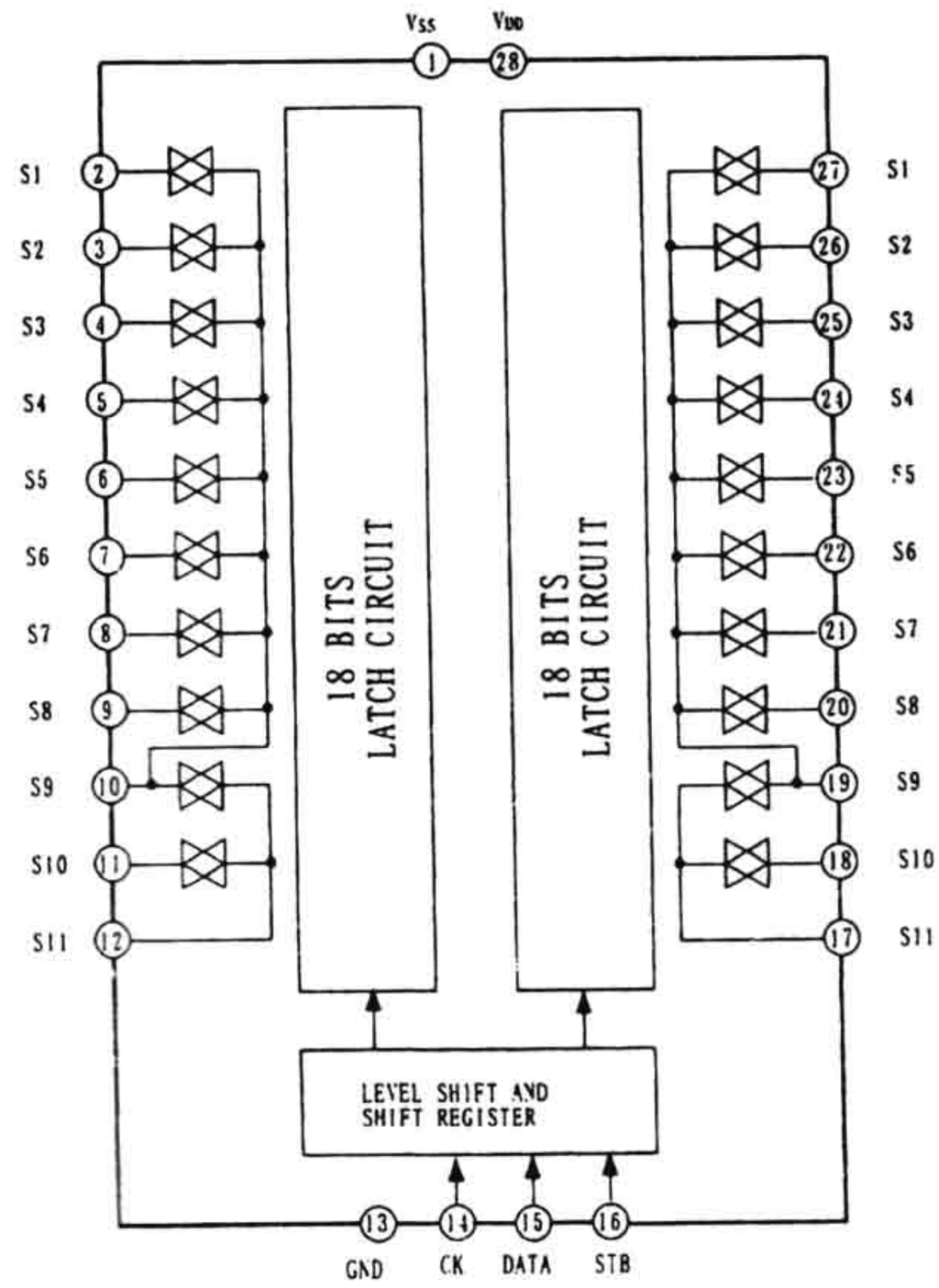

Q521:TC9184P
(Electro Tone Volume)

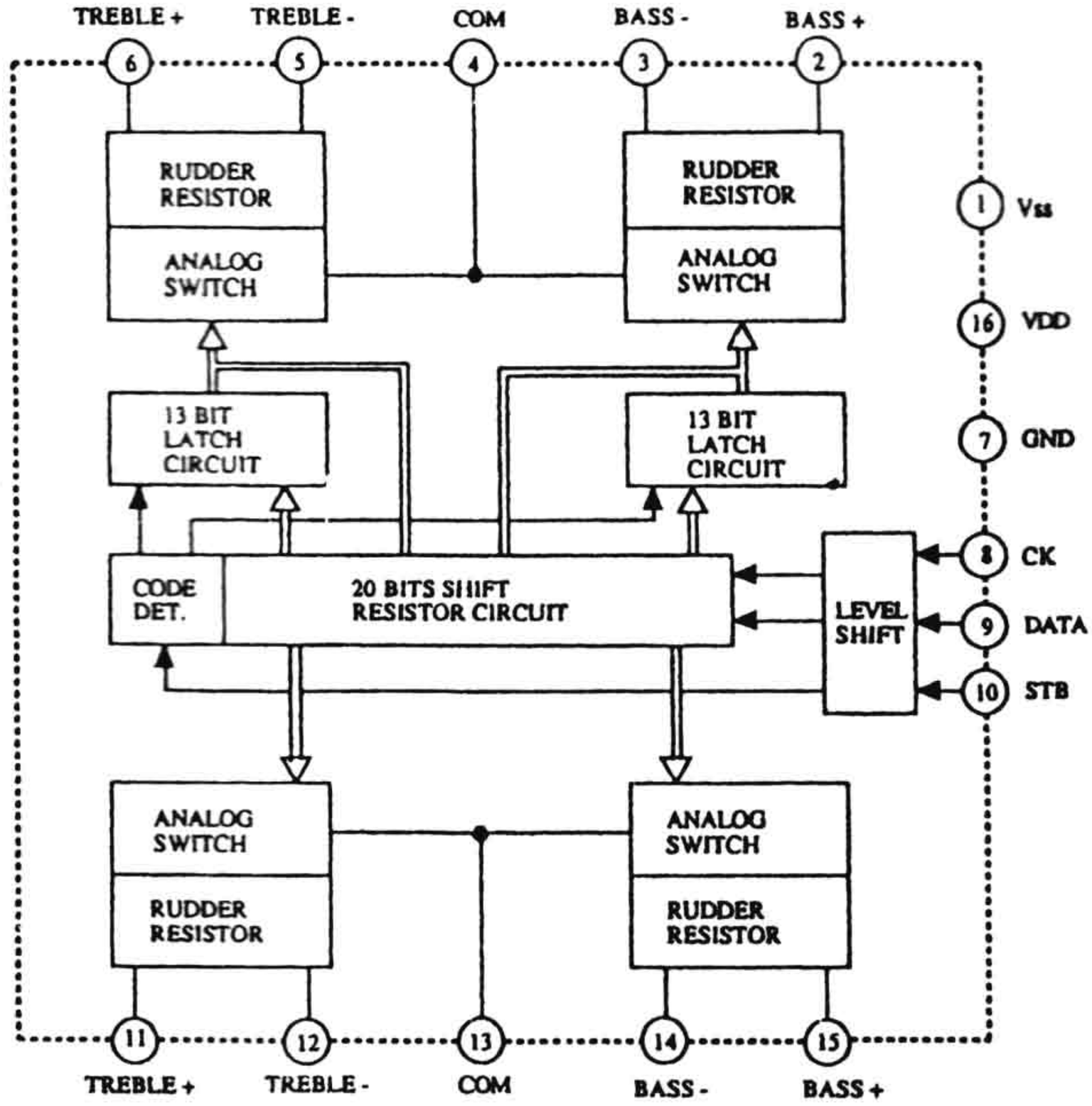

PIN No.	SYMBOL	DESCRIPTION
1	Vss	Power supply terminal for analogue section
16	VDD	
2,15	BASS+	Volume terminals
3,14	BASS-	
5,12	TREBLE-	
6,11	TREBLE+	
4,13	COM	
7	GND	Ground terminal for analogue section
8	CK	Clock input terminal to take in the data of terminal DATA
9	DATA	Data input terminal
10	STB	Strobe input terminal

Q301:CXA1782BQ (Servo Signal Processor)

Pin No.	Symbol	I/O	Description
1	FEO	O	Output pin for focusing error amplifier
2	FEI	I	Input pin of focusing error
3	FDFCT	I	Capacitor connection pin for time constant when defect
4	FGD	I	Capacitor connection pin for high frequency gain Down of focusing servo
5	FLB	I	Time constant circuit connection pin for low frequency gain up of focusing servo
6	FE_O	O	Focusing drive output pin
7	FE_M	I	Inverted input pin of focusing amplifier
8	SRCH	I	Time constant circuit connection pin for focusing search waveform
9	TGU	I	Time constant circuit connection pin for tracking high frequency gain changeover
10	TG2	I	Time constant circuit connection pin for tracking high frequency gain changeover
11	FSET	I	Peak setting pin of phase compensation of focusing tracking
12	TA_M	I	Non-inverted input pin of tracking amplifier
13	TA_O	O	Inverted input pin of tracking amplifier
14	SL_P	I	Non-inverted input pin of sled amplifier
15	SL_M	I	Inverted input pin of sled amplifier
16	SL_O	O	Sled drive output pin
17	ISET	I	Input pin to decide focusing search, tracking jump, and height of sled kick.
18	VCC	-	Power supply pin (+5V)
19	CLK	I	Serial data transfer clock input pin form microprocessor
20	XLT	I	Latch input pin from microprocessor
21	DATA	I	Serial data input pin from microprocessor
22	XRST	I	Reset input pin
23	C.OUT	O	Signal output pin to count the track numbers.
24	SENS	O	FZC, DFCT,TZC etc. signal output pin from command of microprocessor
25	FOK	O	Comparator output pins of focus OK.
26	CC2	I	Defect bottom hold input pin
27	CC1	O	Defect bottom hold output pin
28	CB	I	Capacitor connection pin for defect bottom hold
29	CP	I	Mirror hold capacitor connection pin
30	RF_I	I	RF summing amplifier input pin
31	RF_O	O	RF summing amplifier output pin
32	RF_M	I	RF summing inverted amplifier output pin
33	LD	O	APC amplifier output pin
34	PHD	I	APC amplifier input pin
35	PHD1	I	Inverted input pin of RF I-V amplifier
36	PHD2	I	Inverted input pin of RF I-V amplifier
37	FE_BIAS	I	Bias adjustment pin of focusing error amplifier
38	F	I	Inverted input pin of I-V amplifier of F
39	E	I	Inverted input pin of I-V amplifier of E
40	EI	-	Gain adjustment of I-V amplifier E
41	VEE	-	Ground
42	TEO	O	Tracking error amplifier output pin
43	LPFI	I	Comparator input pin for balance adjustment
44	TEI	I	Tracking error input pin
45	ATSC	I	Window comparator input pin for ATSC detector
46	TZC	I	Tracking zero-cross comparator input pin.
47	TDFCT	I	Capacitor connection pin for time constant when defect
48	VC	O	DC voltage output pin of (VCC+VEE)/2

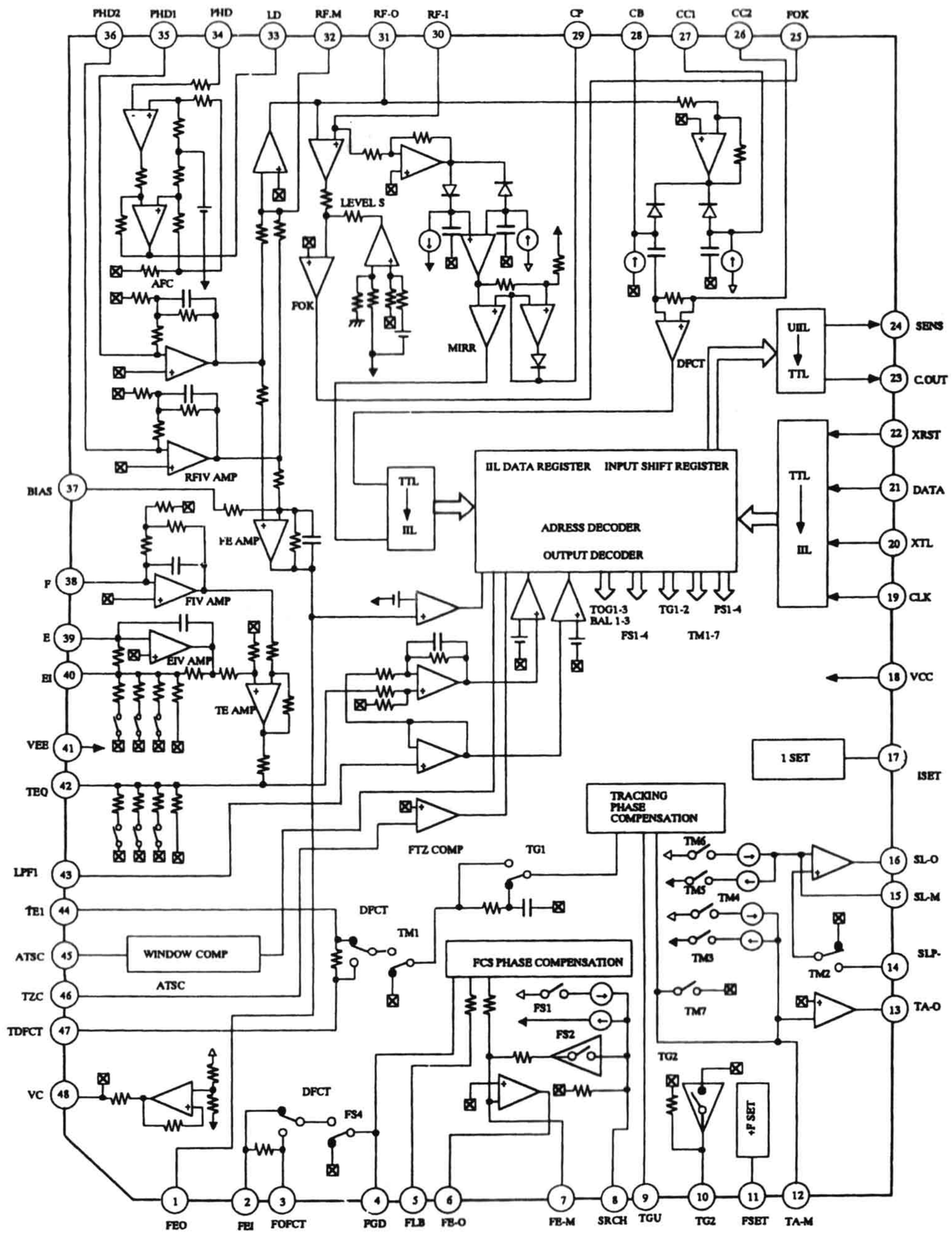

Q351:CXD2507AQ (CD Digital Signal Processor)

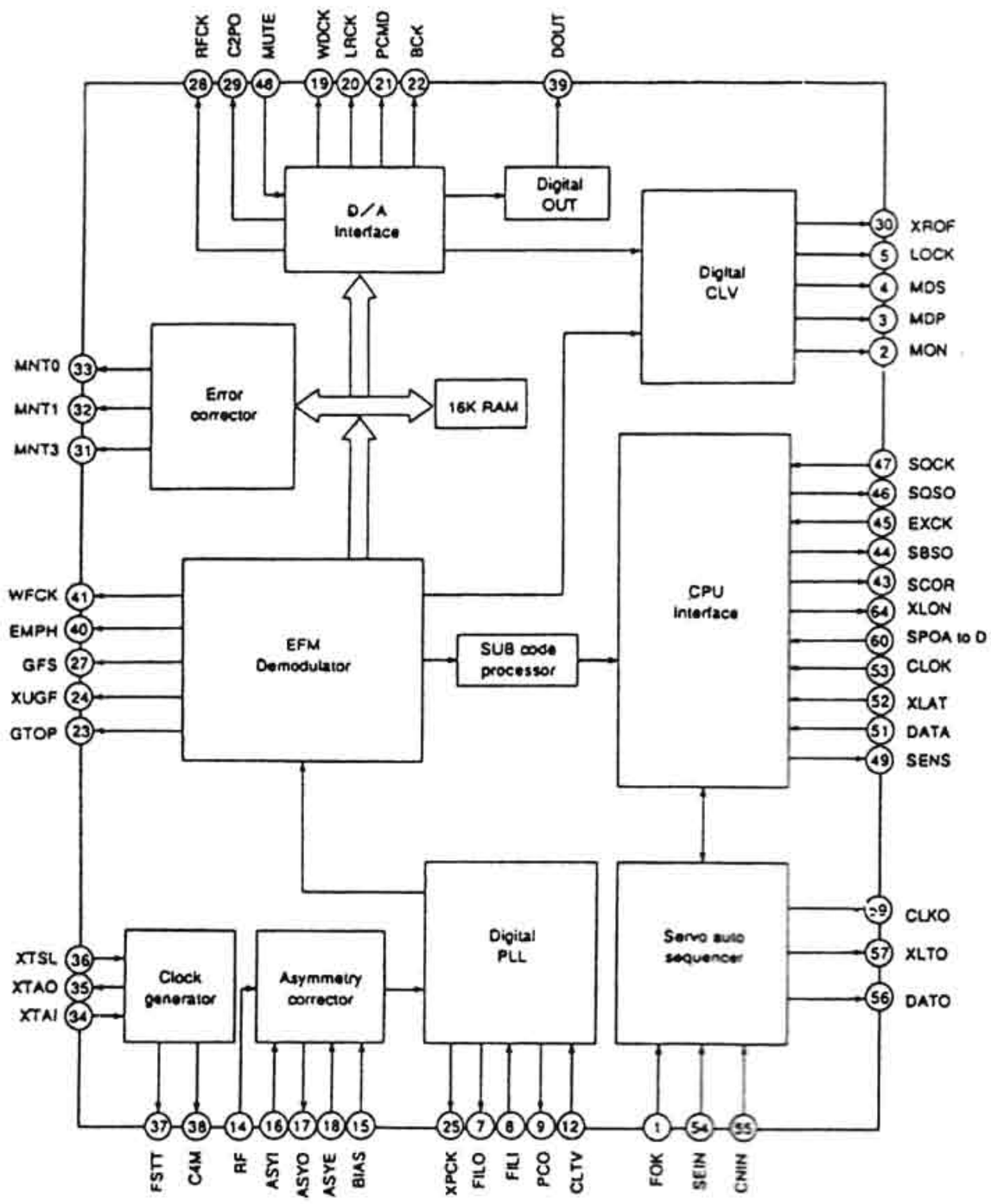

Pin No.	Symbol	I/O	Description
1	FOK	I	Focus OK input. Used for SENS output and the servo auto sequencer.
2	MON	O	Spindle motor on/off control output.
3	MDP	O	Spindle motor servo control.
4	MDS	O	Spindle motor servo control.
5	LOCK	O	GFS is sampled at 460Hz; when GFS is high, this pin outputs a high If GFS is low eight consecutive samples,this pin outputs low.
6	TEST	I	TEST pin. Normally GND.
7	FILO	O	Master PLL(slave=digital PLL) filter output.
8	FILI	I	Master PLL filter input.
9	PCO	O	Master PLL charge pump output.
10	Vss	—	GND.
11	AVss	—	Analog GND.
12	CLTV	I	Master VCO control voltage input.
13	AVDD	—	Analog power supply(+5V).
14	RF	I	EFM signal input.
15	BIAS	I	Constant current input of asymmetry circuit.
16	ASYI	I	Asymmetry comparator voltage input.
17	ASYO	O	EFM full-swing output (low=Vss,high=Vdd).
18	ASYE	I	Low:asymmetry circuit off; high: asymmetry circuit on.
19	WDCK	O	D/A interface. Word clock f=2Fs.
20	LRCK	O	D/A interface. LR clock f=Fs.
21	PCMD	O	D/A interface.Serial data (two's complement,MSB first).
22	BCK	O	D/A interface. Bit clock.
23	GTOP	O	GTOP output.
24	XUGF	O	XUGF output.
25	XPCK	O	XPLCK output.
26	VDD	—	Power supply (+5V).
27	GFS	O	GFS output.
28	RFCK	O	RFCK output.
29	C2PO	O	C2PO output.
30	XROF	O	XRAOF output.
31	MNT3	O	MNT3 output.
32	MNT1	O	MNT1 output.
33	MNT0	O	MNT0 output.
34	XTAI	I	16.9344MHz crystal oscillation circuit input, or 33.8688MHz input.
35	XTAO	O	16.9344MHz crystal oscillation circuit output.
36	XTSL	I	Crystal selection input. Set low when the crystal is 16.9344MHz, high when 33.8688MHz.
37	FSTT	O	2/3 frequency divider output for Pins 34 and 35.
38	C4M	O	4.2336MHz output.
39	DOUT	O	Digital Out output.
40	EMPH	O	Outputs high signal when the playback disc has emphasis, low signal when no emphasis.
41	WFCK	O	WFCK output.
42	Vss	—	GND.
43	SCOR	O	Outputs high signal when either subcode sync S0 or S1 is detected.
44	SBSO	O	Sub P to W serial output.
45	EXCK	I	SBSO readout clock input.
46	SQSO	O	SubQ 80-bit serial output.
47	SQCK	I	SQSO readout clock input.
48	MUTE	I	High: mute; low: release
49	SENS	O	SENSE output to CPU.
50	XRST	I	System reset. Reset when low.
51	DATA	I	Serial data input from CPU.
52	XLAT	I	Latch input from CPU. Serial data is latched at the falling edge.
53	CLOK	I	Serial data transfer clock input from CPU.
54	SEIN	I	Sense input from SSP.
55	CNIN	I	Track jump count signal input.
56	DATO	O	Serial data output to SSP.
57	XLTO	O	Serial data latch output to SSP. Latched at the falling edge.
58	VDD	—	Power supply (+5V).
59	CLKO	O	Serial data transfer clock output to SSP.
60	SPOA	I	Microcomputer extended interface (input A).
61	SPOB	I	Microcomputer extended interface (input B).
62	SPOC	I	Microcomputer extended interface (input C).
63	SPOD	I	Microcomputer extended interface (input D).
64	XLON	O	Microcomputer extended interface (output).

Q302:LA6541D (BTL Driver)

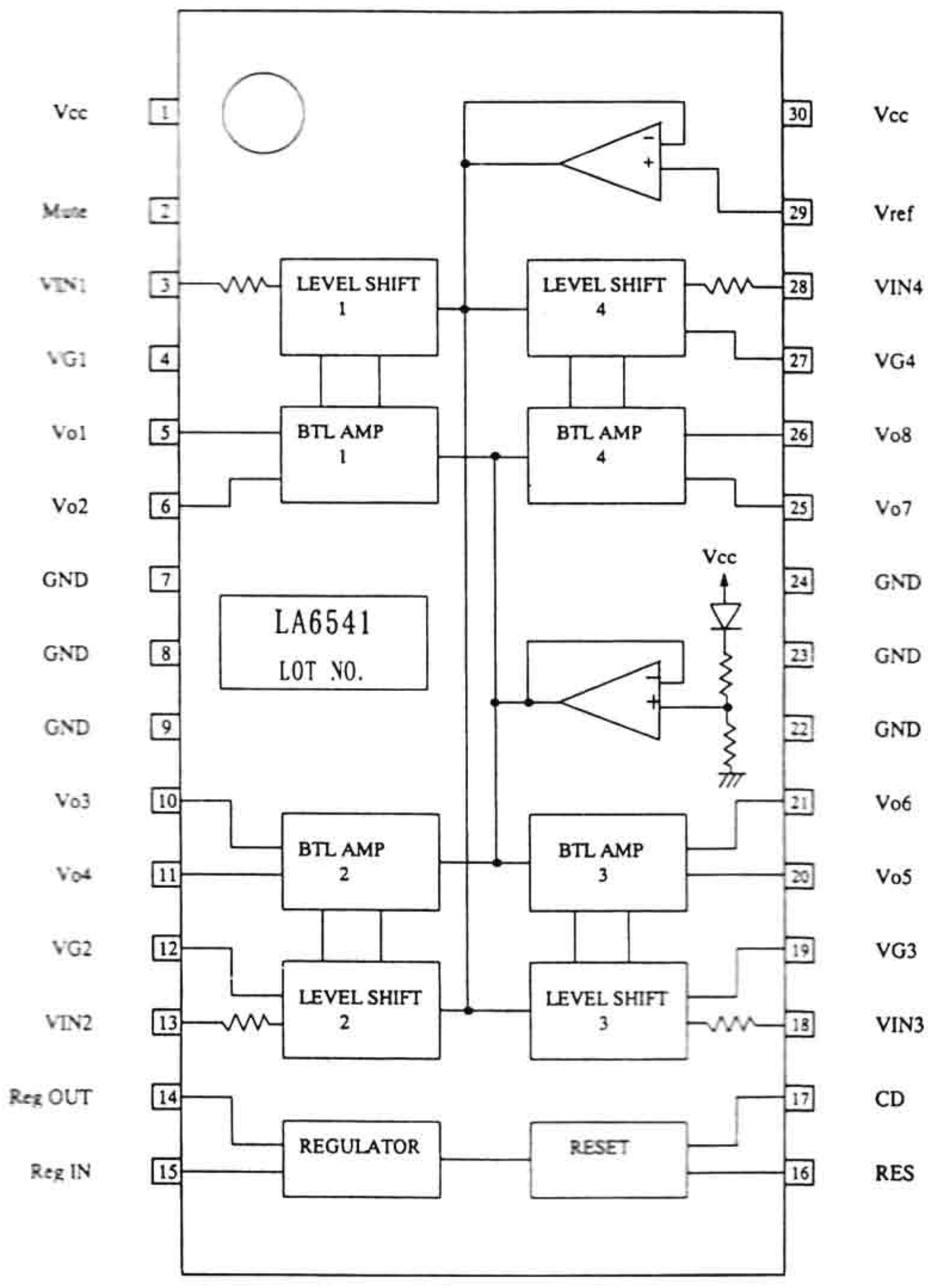

PIN No.	SYMBOL	DESCRIPTION
1	Vcc	Power supply terminal (It is short with 30 pins)
2	Mute	ON/OFF terminal of all BTL AMP output
3	Vin1	Input terminal of BTL AMP 1
4	Vg1	Input terminal of BTL AMP 1 (for gain adjustment)
5	Vo1	Output terminal of BTL AMP 1 (non-reversing side)
6	Vo2	Output terminal of BTL AMP 1 (reversing side)
7	Gnd	Gnd Terminal
8	Gnd	Gnd Terminal
9	Gnd	Gnd Terminal
10	Vo3	Output terminal of BTL AMP 2 (reversing side)
11	Vo4	Output terminal of BTL AMP 2 (non-reversing side)
12	Vg2	Input terminal of BTL AMP 2 (for gain adjustment)
13	Vin2	Input terminal of BTL AMP 2
14	Reg Out	Outside putting transistor (PNP) collector is connected. Power supply output of 5V.
15	Reg In	Outside putting transistor (PNP) base is connected.
16	Res	Reset output terminal
17	Cd	Settingat delay time terminal of reset output
18	Vin3	Input terminal of BTL AMP 3
19	Vg3	Input terminal of BTL AMP 3 (for gain adjustment)
20	Vo5	Output terminal of BTL AMP 3 (non-reversing side)
21	Vo6	Output terminal of BTL AMP 3 (reversing side)
22	Gnd	Gnd Terminal
23	Gnd	Gnd Terminal
24	Gnd	Gnd Terminal
25	Vo7	Input terminal of BTL AMP 4
26	Vo8	Input terminal of BTL AMP 4 (for gain adjustment)
27	Vg4	Output terminal of BTL AMP 4 (non-reversing side)
28	Vin4	Output terminal of BTL AMP 4 (reversing side)
29	Vref	Standard voltage impression terminal of level shift circuit
30	Vcc	Power supply terminal (It is short with one pins)

Q103:BA1450S (AM Radio, and FM Stereo System)

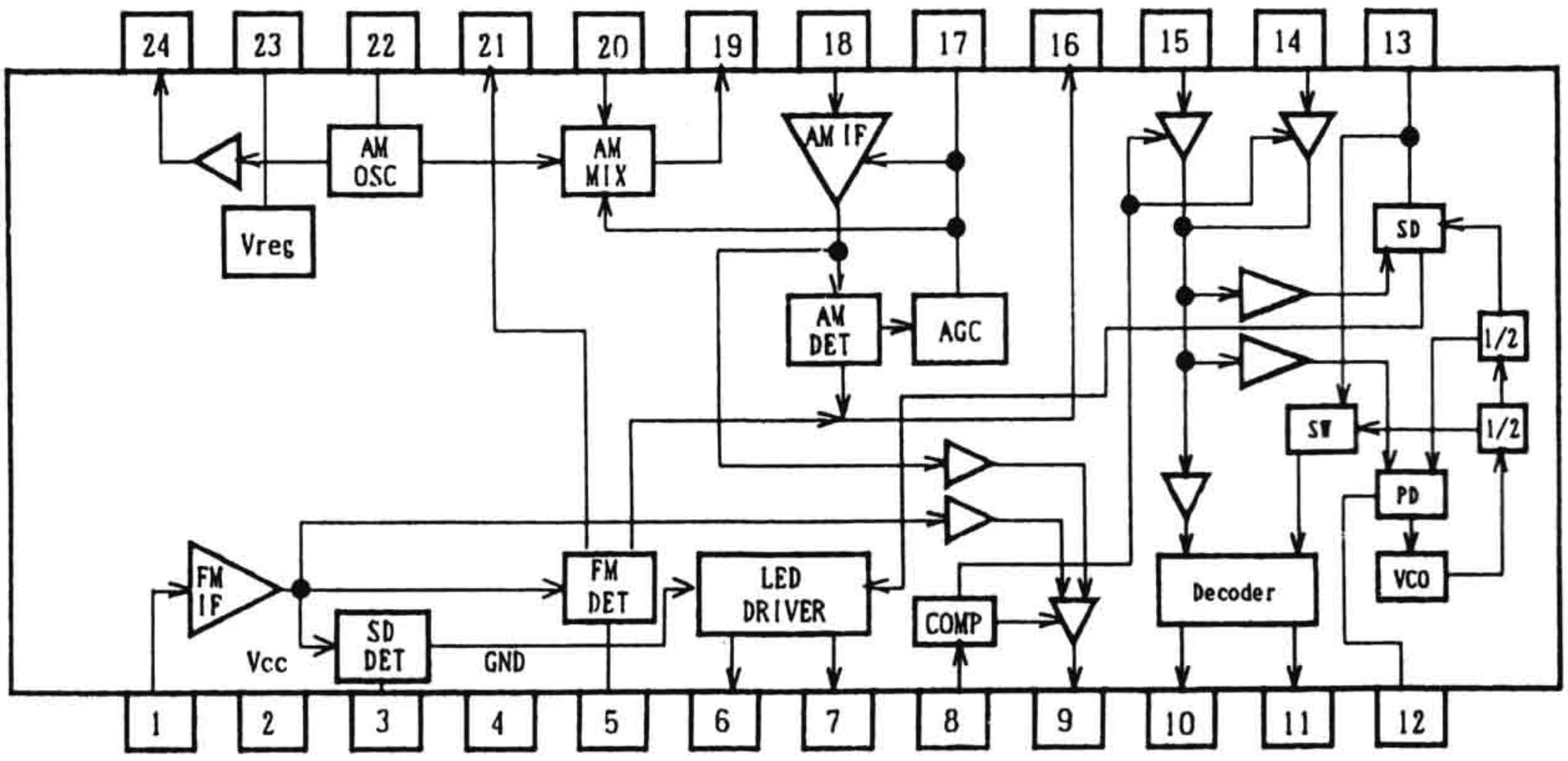

PIN No.	SYMBOL	DESCRIPTION
1	FM IF	FM IF amplifier input Terminal
2	Vcc	Power supply terminal (to 5V)
3	FM SD ADJ.	FM tuning level adjustment Terminal
4	GND	Ground Terminal
5	FM DET OUT	FM discriminator Terminal, Connect the ceramic discriminator.
6	SD	Tuning indicator output Terminal
7	STEREO	Stereo indicator output Terminal
8	IF REQ.	IF request Terminal. Output the FM signal more than 3.5V. Muting detector Terminal. Muting turns on at the signal of more than 1.5V.
9	IF OUT	IF signal output Terminal
10	Rch OUT	Right channel output Terminal
11	Lch OUT	Left channel output Terminal
12	AM／FM	Connect the PLL filter.AM/FM band selector Terminal. AM when this Terminal is connected to the ground.
13	MONO	AUTO/MONO selector Terminal.Pilot signal filter Terminal. MONO when this Terminal is connected to the ground.
14	FM MPX IN	MPX input Terminal for FM signal
15	AM MPX IN	MPX input Terminal for AM signal
16	DETOUT	FM/AM detector output Terminal
17	AM AGC	AM AGC control Terminal
18	AM IF	AM IF input Terminal
19	AM MIX	AM mixer output Terminal
20	AM RF	AM antenna Terminal
21	FM SD WID.	FM band width adjustment Terminal.
22	VREF	Reference voltage Terminal
23	AM OSC IN	AM local oscillator Terminal
24	AM OSC OUT	AM local oscillator output Terminal

Q181:BU1923 (RDS Decoder)

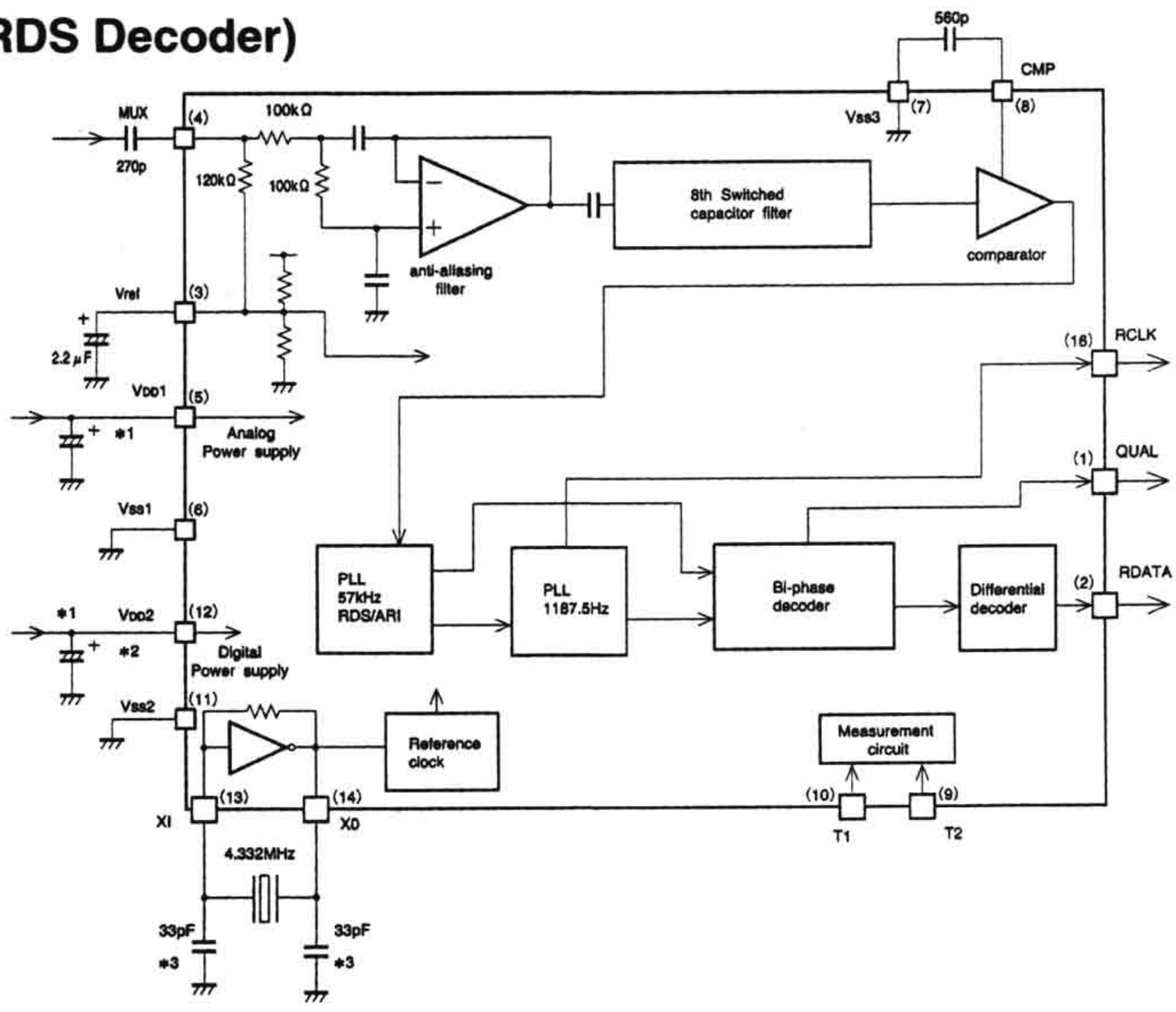

Q303:TA7291S (Motor drive)

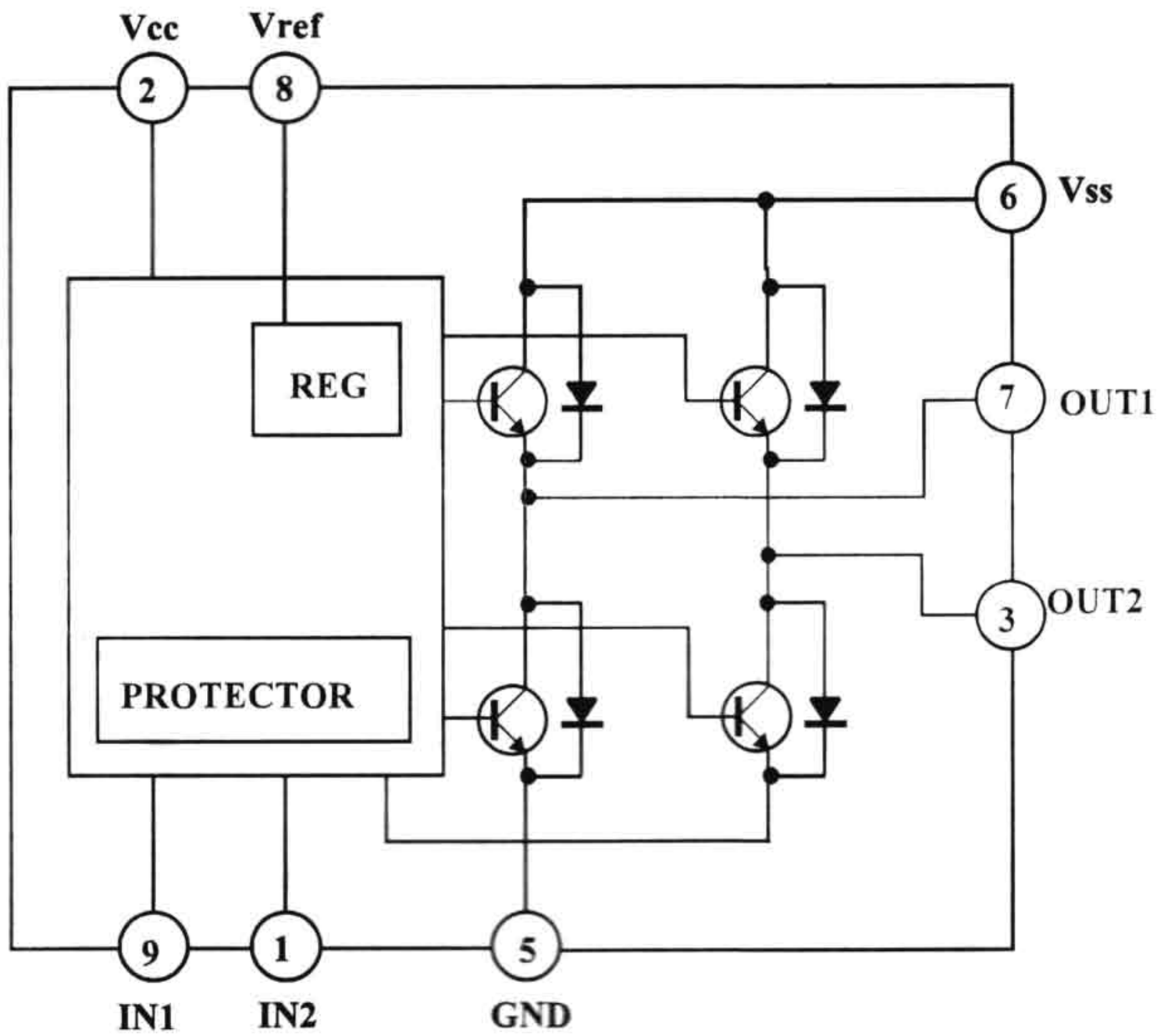

INPUT		OUTPUT		MODE
IN1	IN2	OUT1	OUT2	
0	0	∞	∞	STOP
1	0	H	L	CW/CCW
0	1	L	H	CCW/CW
1	1	L	L	BRAKE

CCW:Counter clockwise direction
CW:Clockwise direction

Q223:4052B (Analog Multiplexers)

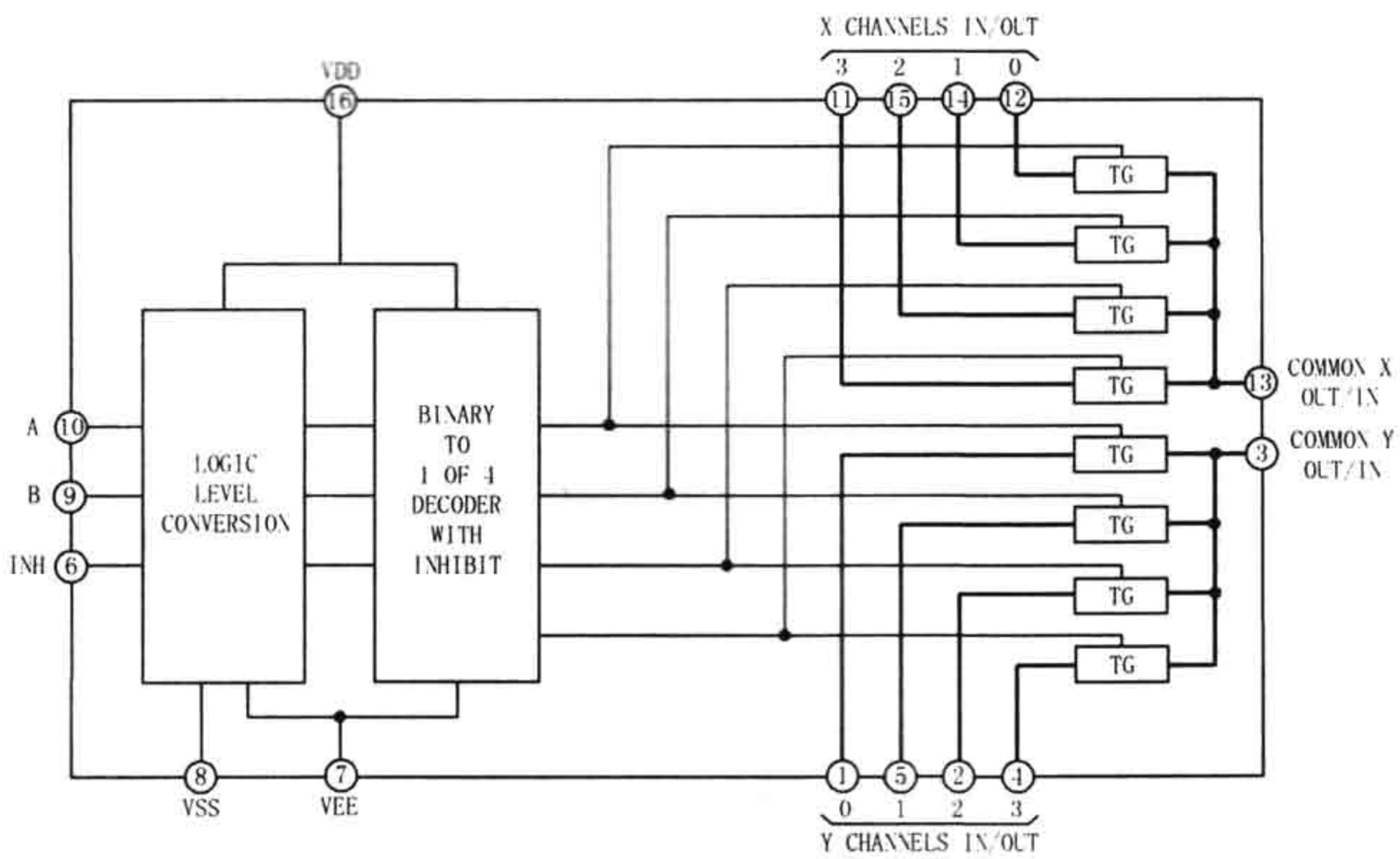

INHIBIT	B	A	
0	0	0	0X, 0Y
0	0	1	1X, 1Y
0	1	0	2X, 2Y
0	1	1	3X, 3Y
1	×	×	NONE

Q361:CS4327 (DA Converter)

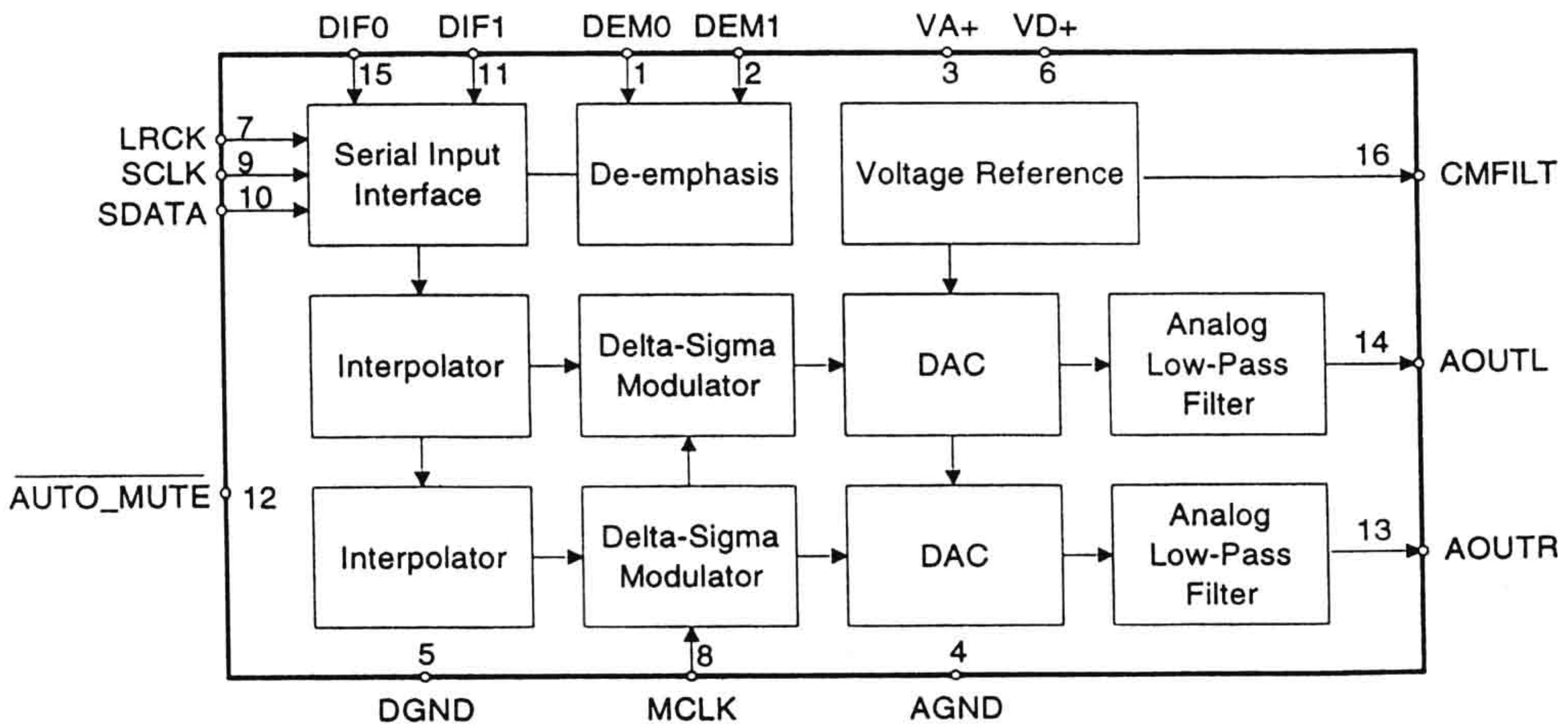

Pin No.	Function	Description	
1	DEMO	Emphasis select pins	
2	DEM1		
3	VA+	Power supply pin for analog section	
4	AGND	Ground pin for analog section	
5	DGND	Ground pin for digital section	
6	VD+	Power supply pin for digital section	
7	LRCK	LR clock input pin (44.1 kHz)	Connect to pin 32 of CXD-2500BQ.
8	MCLK	Master clock input pin (16.39 MHz)	Connect to pin 58 of CXD-2500BQ.
9	SCLK	Serial bit clock input pin	Connect to pin 35 of CXD-2500BQ.
10	SDATA	Serial data input pin	Connect to pin 34 of CXD-2500BQ.
11	DIF1	Pin to decide the format of input signal.	
12	$\overline{\text{AUTOM}}$	Muting output for analog section	
13	AOUTR	Right channel output pin	
14	AOUTL	Left channel output pin	
15	DIF0	Pin to decide the format of input signal .	
16	CMFILT	De-coupling capacitor connection pin of internal reference voltage circuit	

DEM0, DEM1

DEM1	DEM0	De-emphasis
0	0	32kHz
0	1	44.1kHz
1	0	48kHz
1	1	OFF

DIF0, DIF1

DIF1	DIF0	Format
0	0	0
0	1	1
1	0	2
1	1	3

Q751:M66004FP (FL TUBE DRIVER)

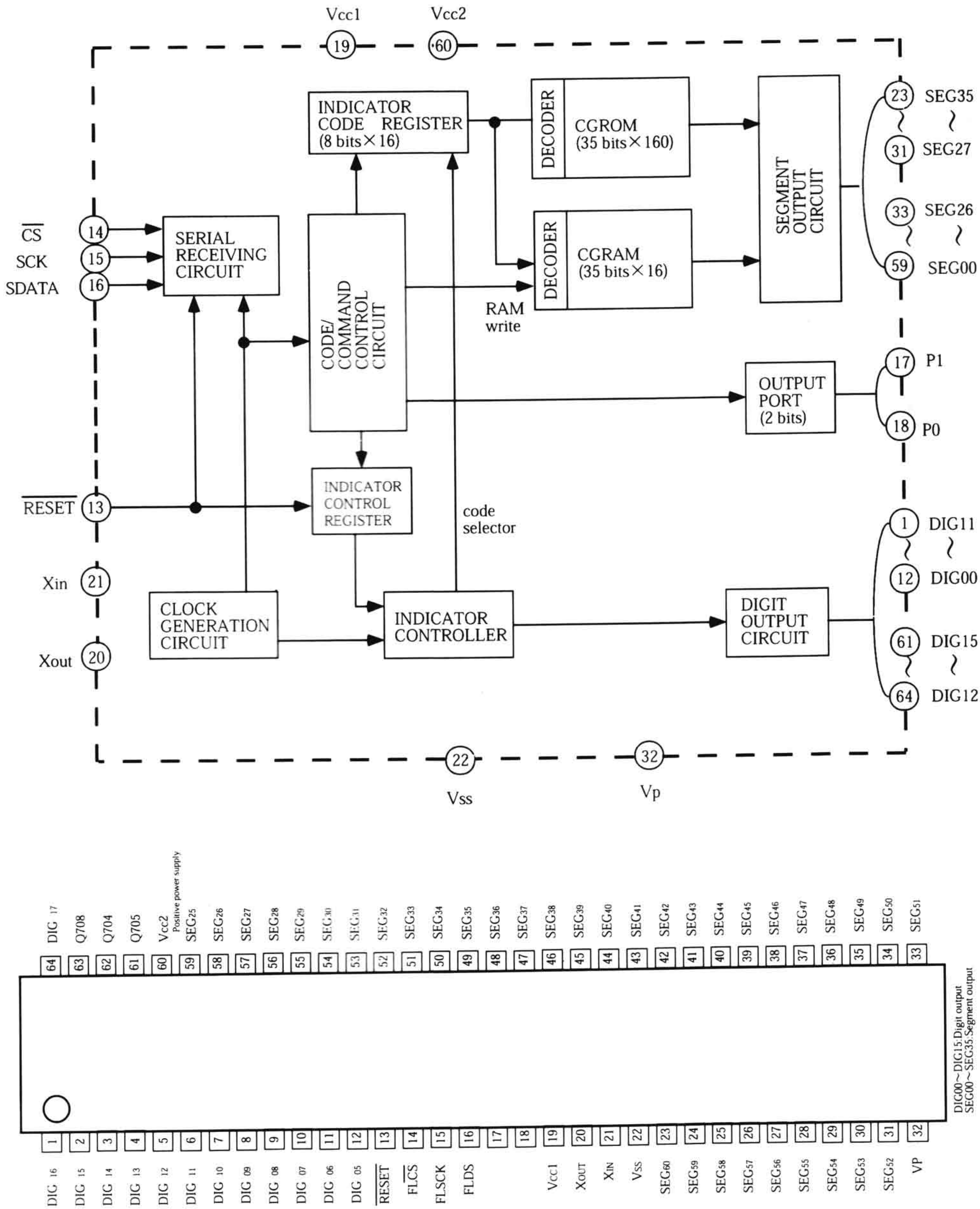

CD ADJUSTMENT PROCEDURES

Preparation

Set the trimming resistors R312 and R323 to center.

A.Focus offset adjustment

1. Connect the oscilloscope to pin#1(RF) of the socket P305
   GND to pin#2(VR)
2. Load the test disc YEDS-18 on the tray and play the track 2.
3. Adjust the trimming resistor R312 so that the waveform(eye pattern) on the oscilloscope becomes maximum. When the output is broad,set R312 to the mechanical center.
4. Remove the oscilloscope.

B.Focus gain adjustment

1. Set the output of the audio oscillator to 1kHz and 1～1.5Vp-p.
2. Connect the oscilloscope and audio oscillator as shown below. (Refer Fig-1)

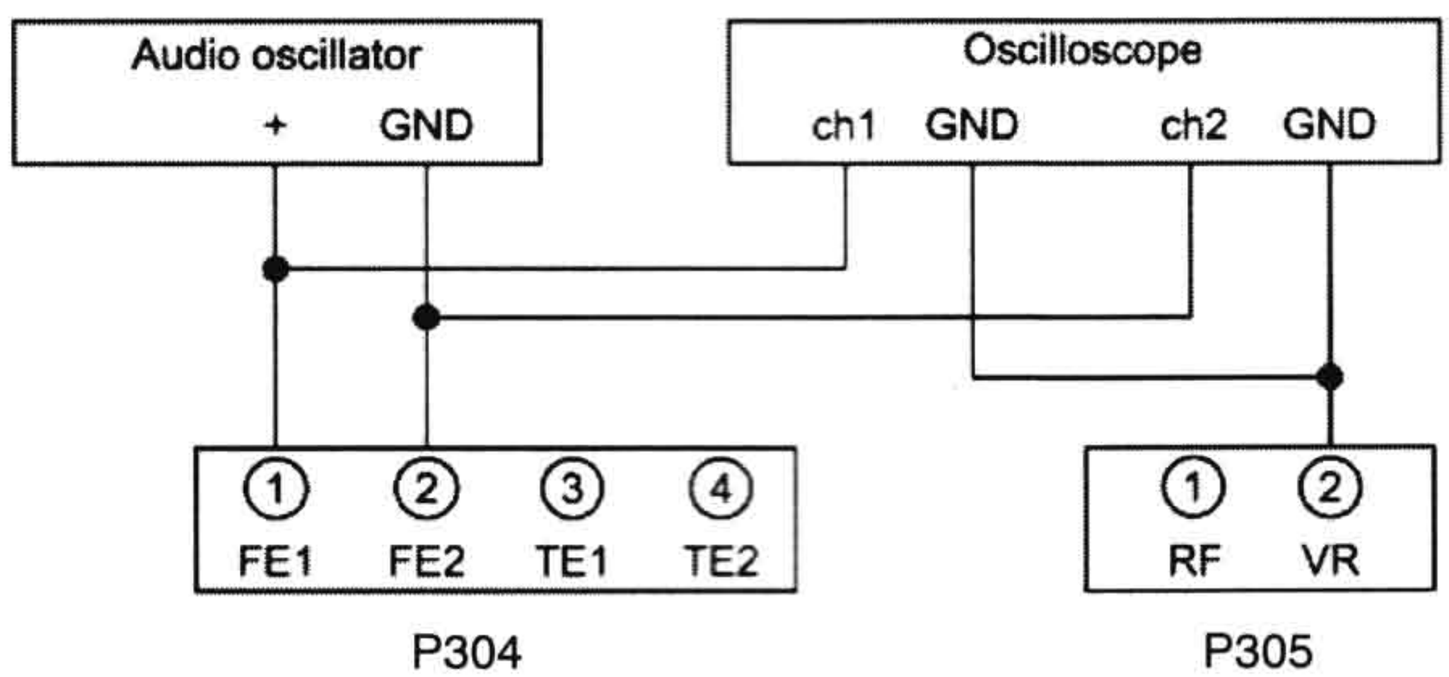

Fig-1

3. Load the test disc YEDS-18 on the tray and play the track 2.
4. Adjust the trimming resistor R323 so the signal of channel 2 on the oscilloscope becomes 1.25 times of channel 1. (Refer Fig-2)
5. Remove the oscilloscope and audio oscillator.

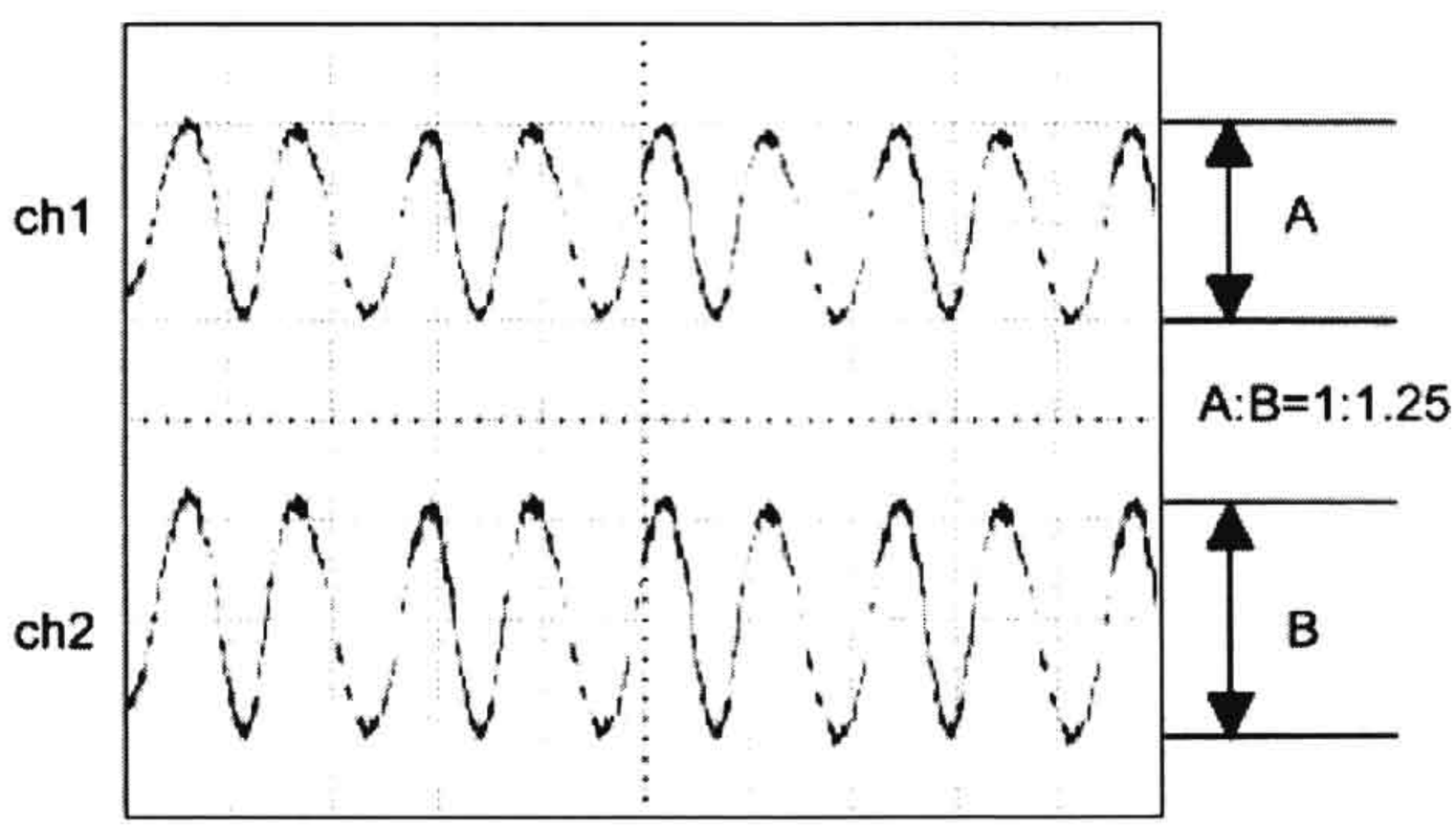

Fig-2

TUNER ADJUSTMENT PROCEDURES

Preparation

1. Input

FM mono : 1kHz, 75kHz devi., 60dB/ μ V

FM stereo : 1kHz, 67.5kHz devi., 60dB/ μ V

Pilot signal 19kHz 7.5kHz devi.

2. Outputs

Connect the non-inductive type resistor of 8 ohms to the all speaker terminals unless otherwise noted.

1. FM ADJUSTMENT

Item	Connection of instrument	FM SG output	Stereo modulator output	Tuning frequency	Output indicator	Adjustment point	Adjust for	Remarks
FM IF/RF	Fig.1	99.0MHz devi. 1kHz 75kHz devi. 65dBf(60dB)	——	99.0MHz	DC voltmeter	L101	0±20 mV	FM MUTE/MODE switch : ON/AUTO
Stereo distortion	Fig.1	99.0MHz Ext.mod. 65dBf(60dB)	Channel L or R 1kHz	99.0MHz	Distortion analyzer	IFT on the front end	Minimum	Don't turn more than ±180°
Muting level	Fig.1	99.0MHz 23.2dBf(18dB)	——	99.0MHz	Oscilloscope	R101	Signal output	18 dB

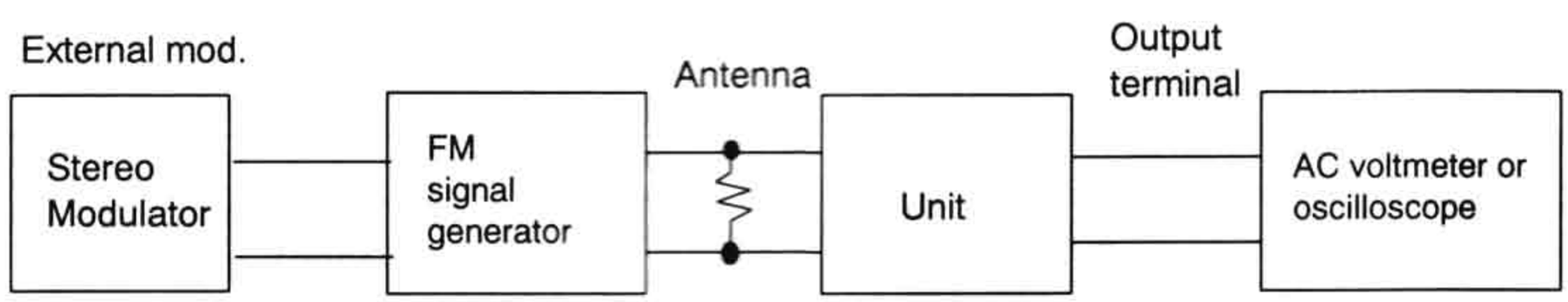

<Fig 1>

CLOCK ADJUSTMENT PROCEDURES

Connect the Frequency counter to J267 on NADG-5642.

While hold down CD STOP key at the standby mode, press STANDBY key to set the unit to the test mode.

Adjust the trimming capacitor C702 so that the indication of frequency counter becomes 5MHz ± 10Hz.

IDLING CURRENT ADJUSTMENT PROCEDURES

1. Connect the DC volt meter to P523 and P524 on the NAAF-6535.
2. Turn Power switch to on after trimming resistors R587 and R588 are turned counter clockwise.
3. Adjust the trimming resisitors R587 and R588 so that the reading of DC volt meter becomes 0.2 to 0.3 mV after one minute.
4. After adjustment , attach the top cover.
5. Readjust the trimming resisitors R587 and R588 so that the reading of DC volt meter becomes 3 mV after five minutes.

Notes : no load and no signal.

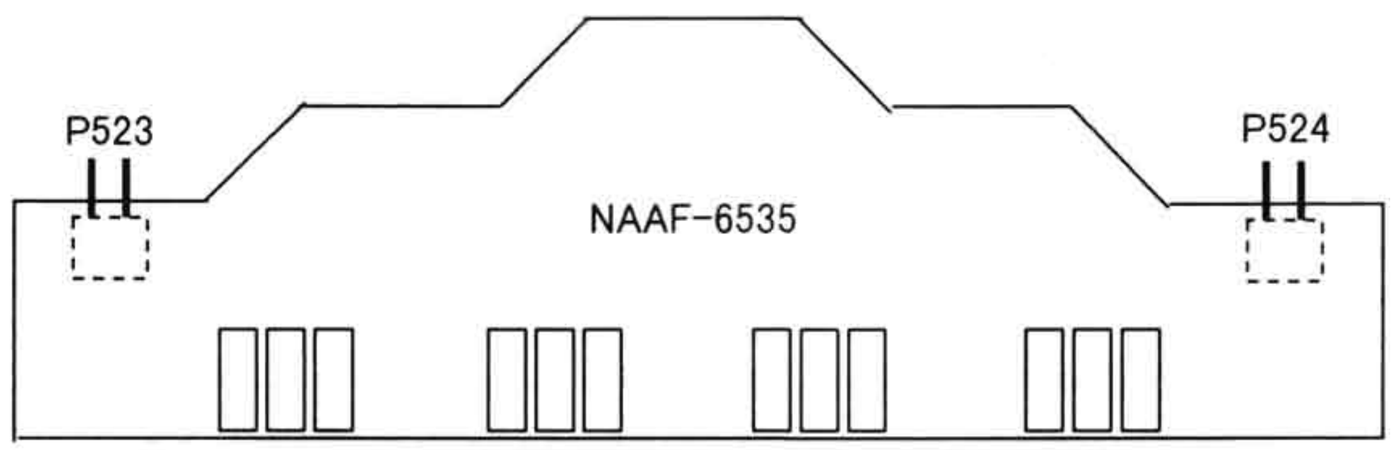

MD MECHANISM DISASSEMBLY

· Remove the parts in numerical order.

[Main frame]

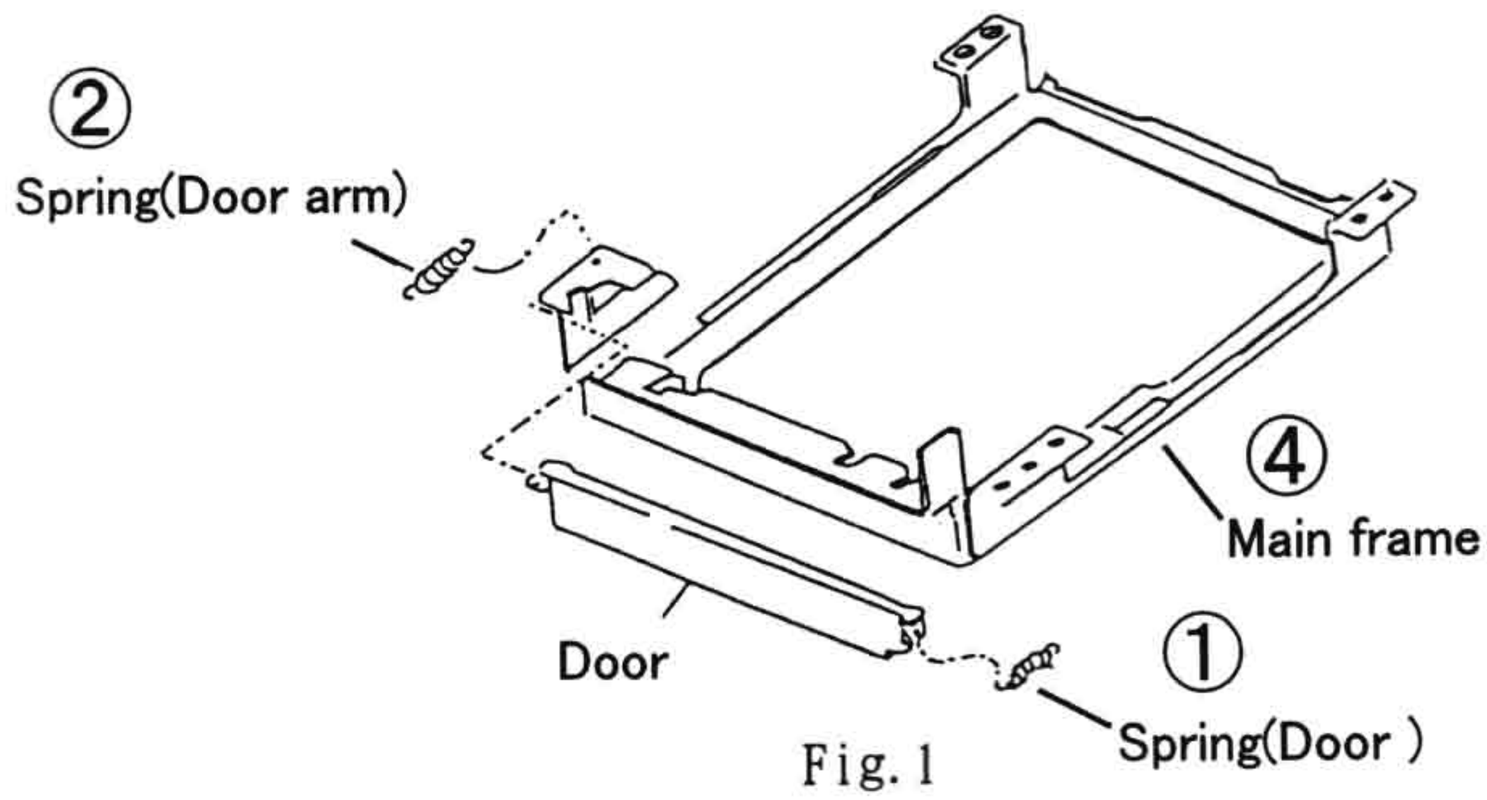

Fig. 1

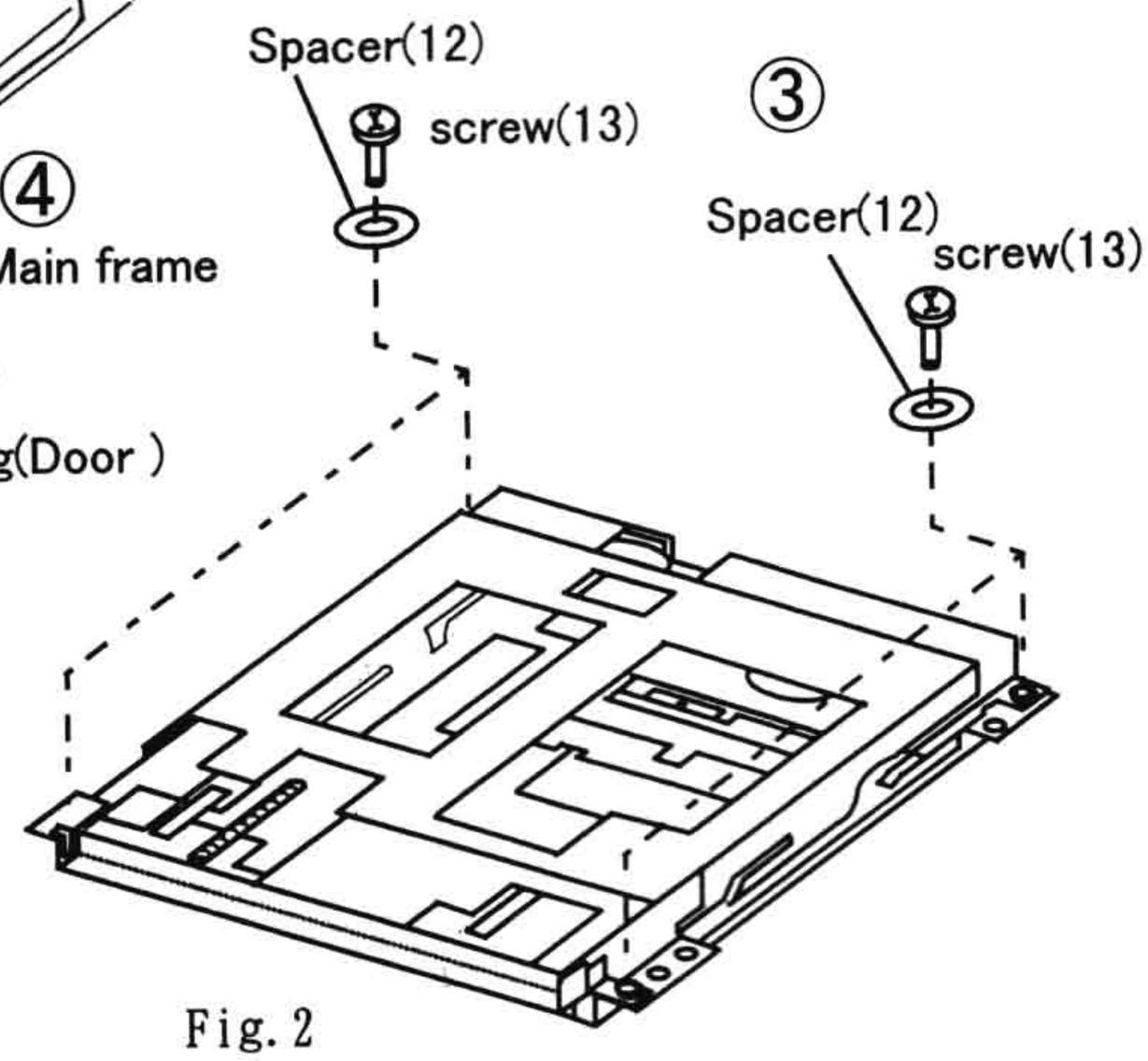

Fig. 2

[MD mount]

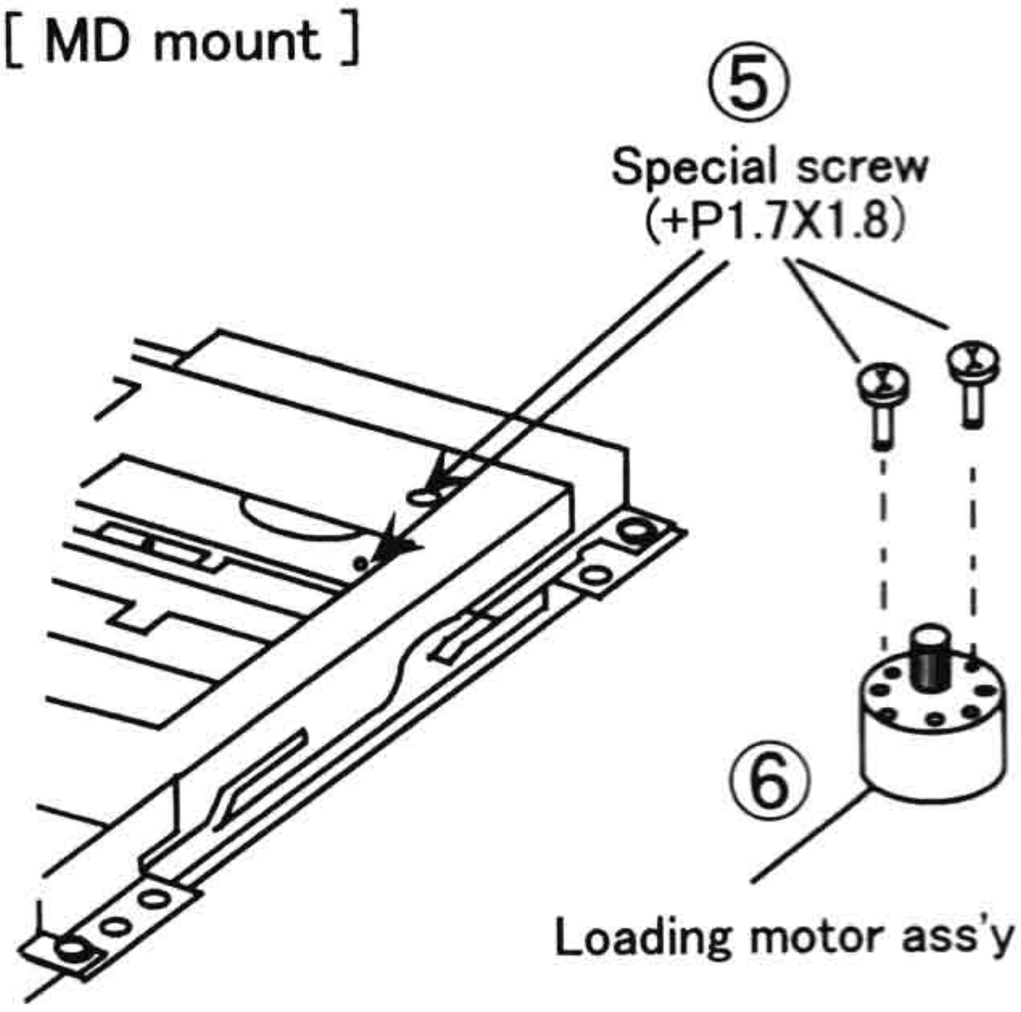

Fig. 3

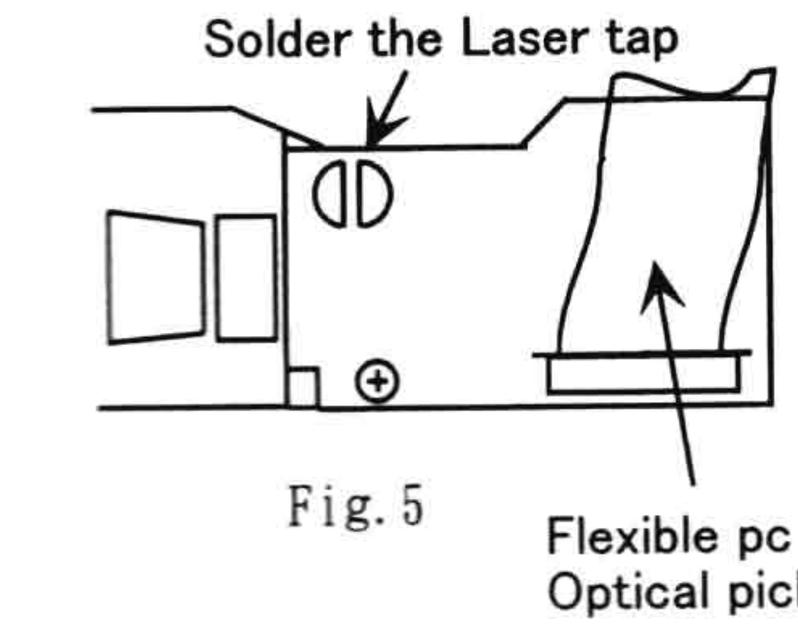

Fig. 5

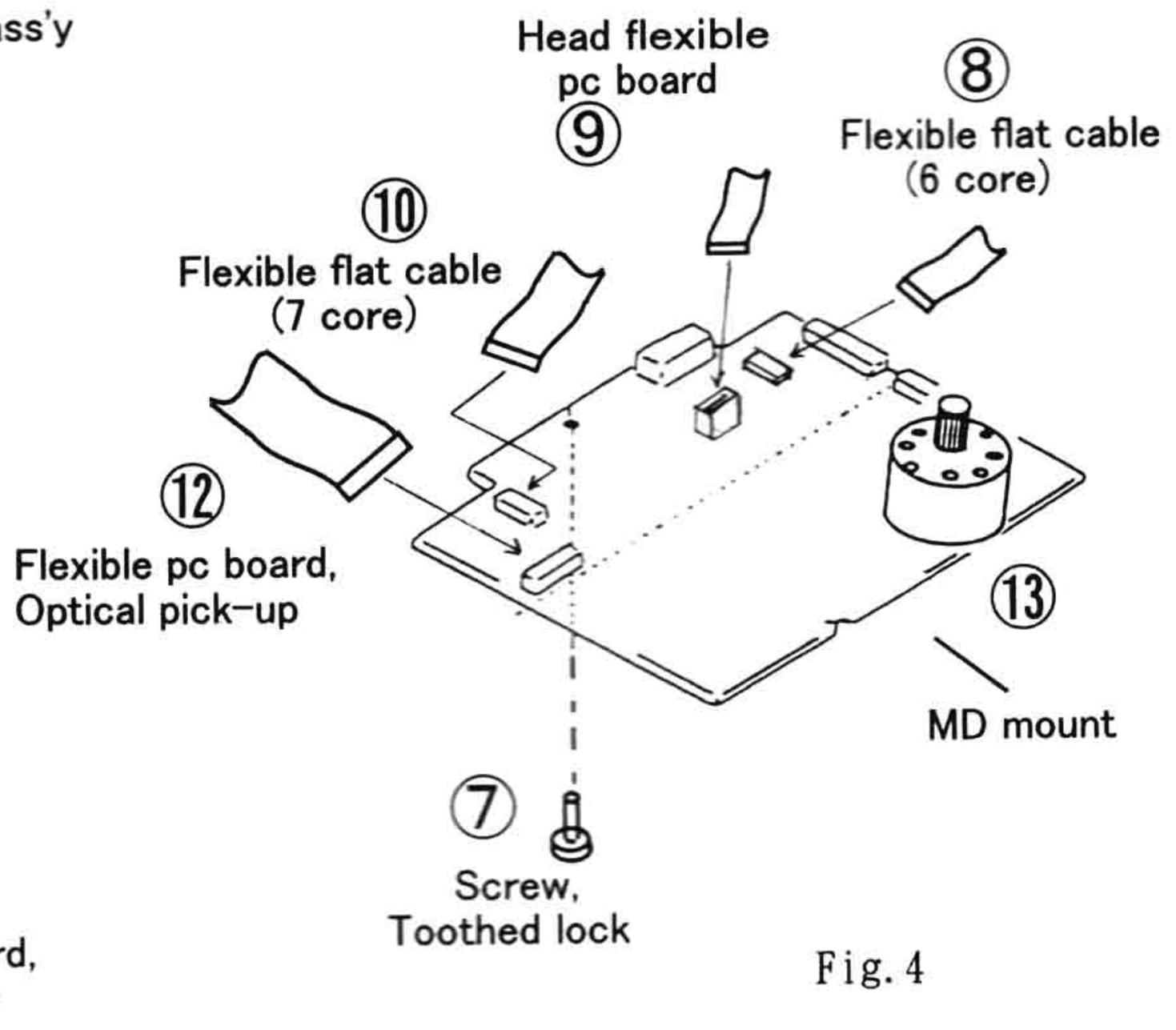

Fig. 4

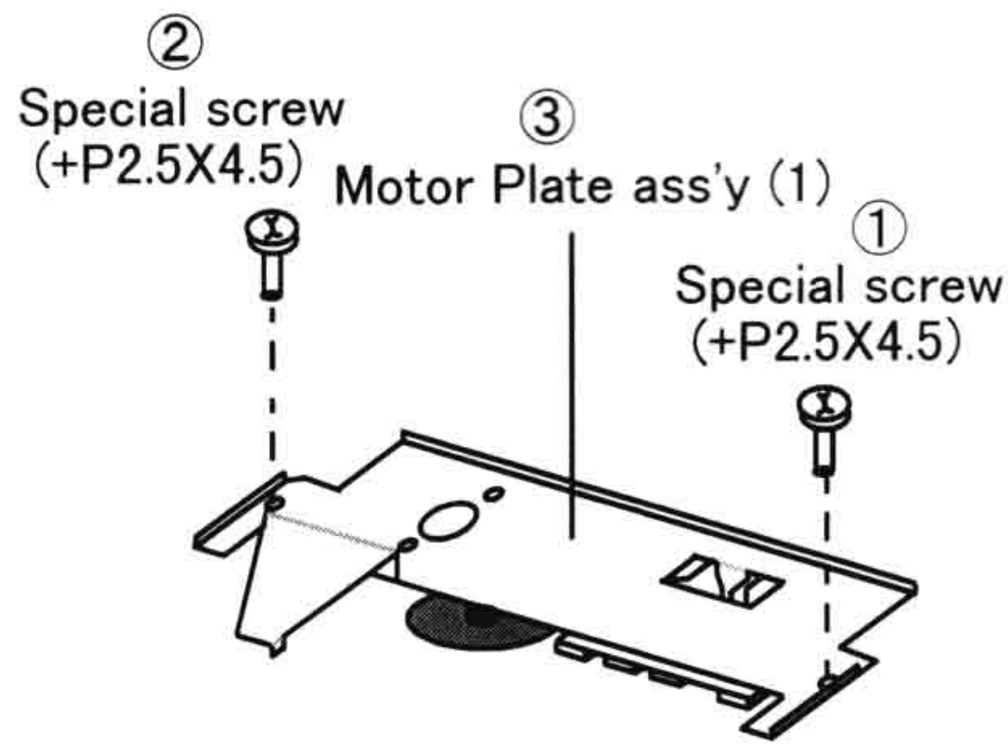

(Fig. 6)

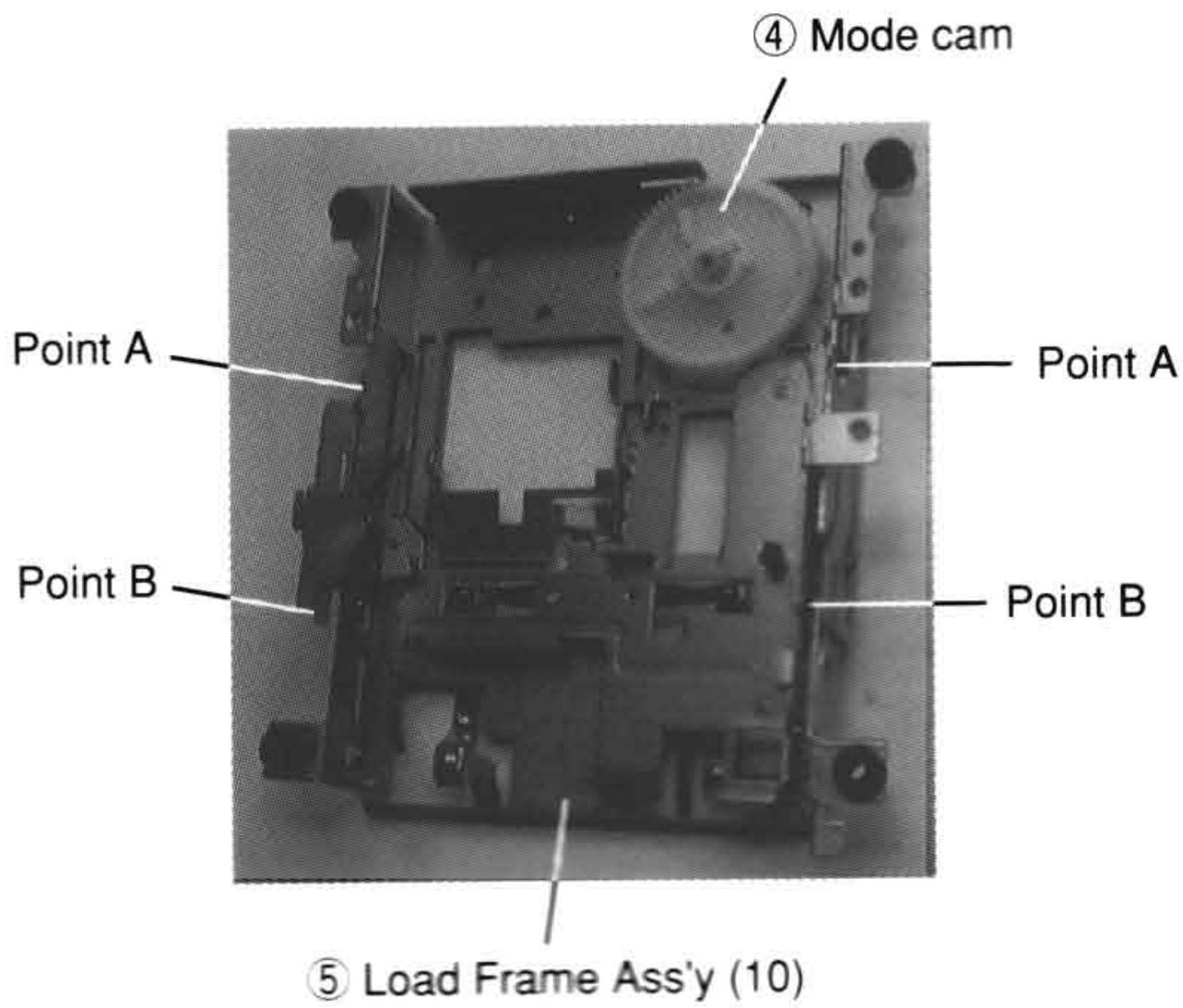

(Fig. 7)

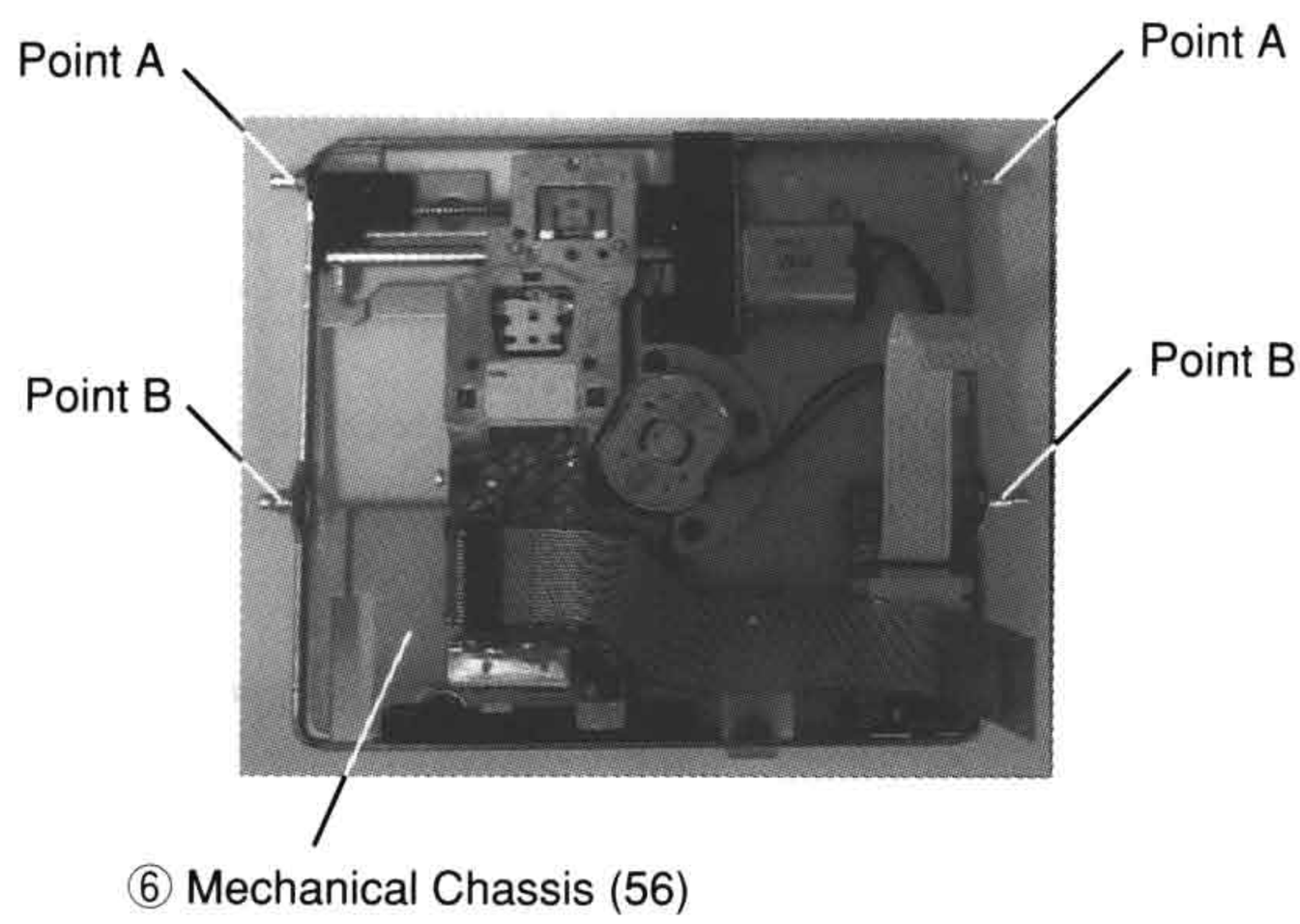

(Fig. 8)

[Overwrite head]

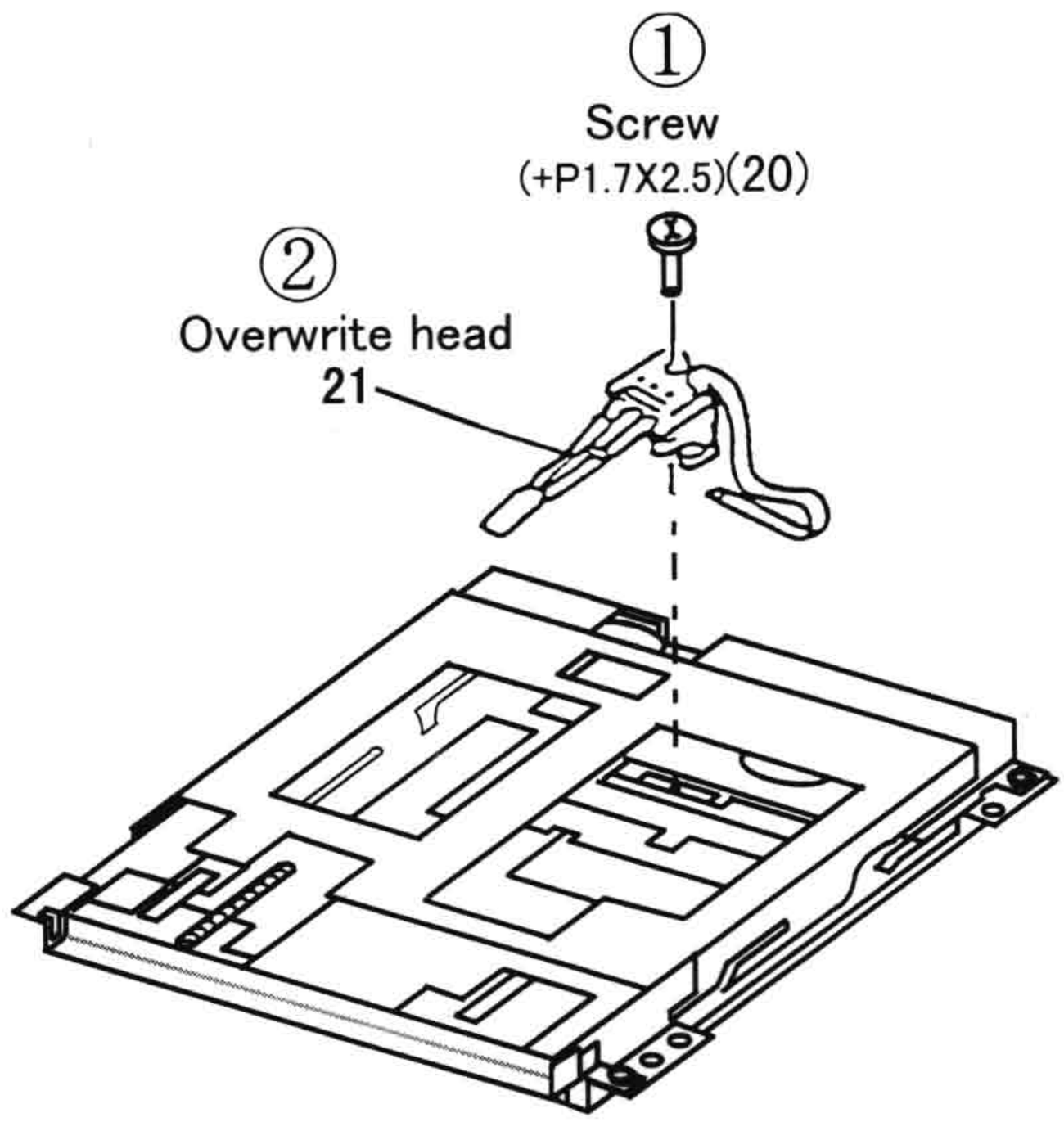

Fig. 1

[Optical pick-up,]
KMS-260A/JIN

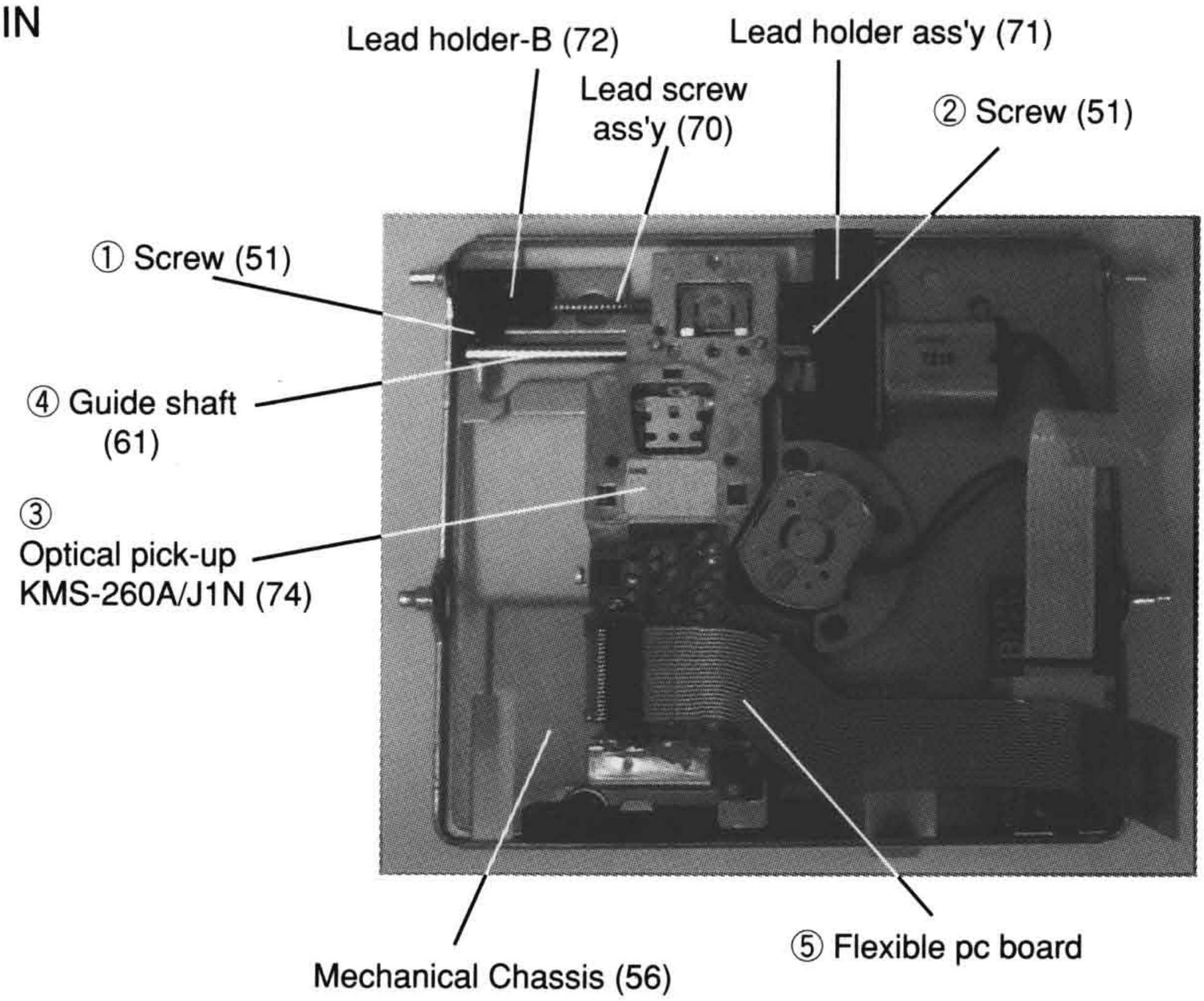

Fig. 2

MD MECHANISM ADJUSTMENT PROCEDURES

1. TEST MODE

1.1 Precaution for Using the Test Mode

1. In the test mode, the loading related movement does not correspond with the test operation.
   Be sure that the disc is stopped completely before replacing the disc.
   Pressing the EJECT key when a disc is rotating in continuous play/recording, etc. does not stop the rotation of the disc, causing the rotating disc to be ejected.
   While pressing the EDIT/NO key after the rotation of the disk stops,
   Push the EJECT key after the rotation of the disk stops after pushing the EDIT/NO key.

2. In the test mode, the open/close state of the record-protect tab is not detected and therefore, if the unit enters a laser power emitting mode such as continuous recording mode (REC MODE) and traverse adjustment mode (FBAL ADJUST), the recorded contents will be erased regardless of the position of the record-protect tab. If a disc whose contents must not be erased is used in the test mode, be careful not to select the continuous recording mode or traverse adjustment mode.

1.2 Setting the Test Mode

1. While hold down REC key at the standby mode, press STANDBY key to set the power of unit on.
2. Press the STANDBY key to set the unit power off.
3. While hold down EDIT/NO/CLEAR key , press DISPLAY key.
4. Press the STANDBY key to set the unit power on.

1.3 Canceling the Test Mode

Unplug the power cord of the unit from the wall outlet.

1.4 Basic Operation in the Test Mode

In the test mode, all operations are made through three controls: JOG knob, YES key and EDIT/NO key.
The functions of these controls are shown below.

Function name	Function
JOG knob	Changes the parameter and test item.
YES key	Proceeds to the next step or finalizes the operation.
EDIT/NO key	Returns to the previous step or aborts the operation.

1.5 Selecting the Test Item

Select the desired test item from the following eight items by turning the JOG knob.

Display information	Test item
TEMP ADJUST	Temperature compensation offset adjustment
LDPWR ADJUST	Laser power adjustment
LDPWR CHECK	Laser power adjustment
EFBAL ADJUST	Traverse adjustment
FBIAS ADJUST	Focus bias adjustment
FBIAS CHECK	Focus bias adjustment
PLAY MODE	Continuous play mode
REC MODE	Continuous recording mode

For details of individual test items, see the applicable section in "2. Electrical Adjustments".
If you select a wrong test item, press the EDIT/NO key to deselect the item.
* EP MODE (non-volatile memory mode) is not used for servicing.
If you select this item by mistake, press the EDIT/NO key immediately to deselect the item.

2. Precautions for Adjustments

2.1 Adjustment information

	Remplacement		
	Optical pick up	PC Board	Parts
TEMP ADJUST	×	○	○
LDP ADJUST	○	○	○
EF BAL ADJUST	○	○	○

2.2 Precautions for Checking Laser Emission from the Laser Diode

When checking the emission of laser from the laser diode during adjustments, never it from directly above the laser diode. Doing so may cause loss of your eyesight.

2.3 Precautions for Handling the Optical Pickup (KMS-260A)

The laser diode inside the optical pickup is easily damaged by static electricity.
When handling the optical pickup, solder-bridge the laser tap located on the flexible circuit board.
If you are disconnecting the optical pickup, provide solder-bridging before removing it;
Do not remove the solder bridging before reconnecting the optical pickup.
Also, tape sufficient preventive measures against static electricity when working on it.
It is also noted that the flexible circuit board must be handled carefully because its wiring is easily broken.

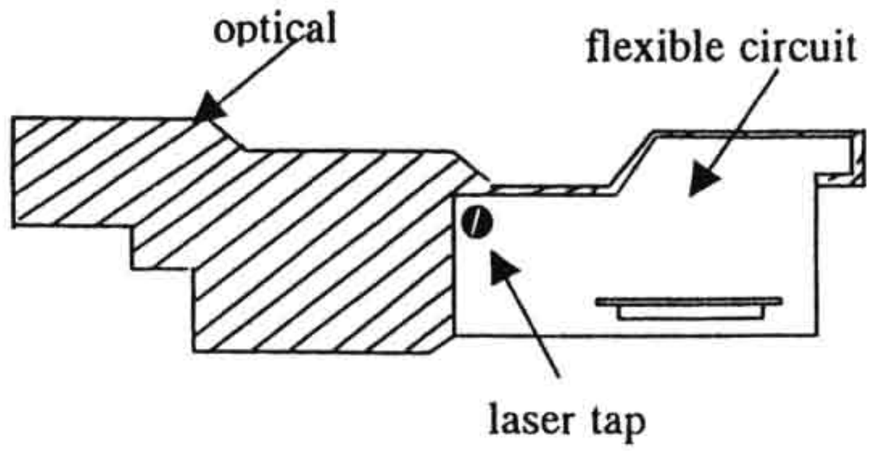

2.4 Precautions for Adjustments

1) Whenever you have replaced the optical pickup, adjust the laser power.
2) Conduct adjustments in the test mode.
   Exit from the test mode if you have finished adjustments.
3) Use the following test disc and measuring instruments.

   MD test disc: TGYS-1
   Laser power meter: LPM-8001 (manufactured by LEADER)
   Oscilloscope (with 40MΩ band or more; Conduct probe CAL before measurement.)
   Digital voltmeter

4) If you monitor two or more signals on an oscilloscope, do not connect VC to GND inside the oscilloscope. (Otherwise, short-circuit will occur between VC and GND.)

3. ELECTRICAL ADJUSTMENTS

3.1 Temperature Compensation Offset Adjustment

Save the temperature data at that time in the non-voltage memory as 25℃ reference data.

Note :

1. Usually, do not perform this adjustment.
2. Perform this adjustment in an ambient temperature of 22℃ to 28℃
   perform it immediately after the power is turned on when the internal temperature of the unit is the same as the ambient temperature.
3. When D101 has been replaced, perform this adjustment after the temperature of this part has become the ambient temperature.

Adjusting Method :

1. Rotate the JOG knob and display "TEMP ADJUST".
2. Press the YES key and select the "TEMP ADJUST".
3. "TEMP=××" and the current temperature data will be displayed.
4. To save the data ,press the YES key..
   When not saving the data,press the NO key.
5. When the YES key is pressed, "TEMP=××SAVE" will be displayed for some time, followed by "TEMP ADJUST".
   When the NO key is pressed, "TEMP ADJUST" will be displayed.

Specifications :

The temperature should be within "E0-FF","F0-FF","00-FF","10-1F" and "20-2F".

3.2 Adjusting the Laser Power

Connection:

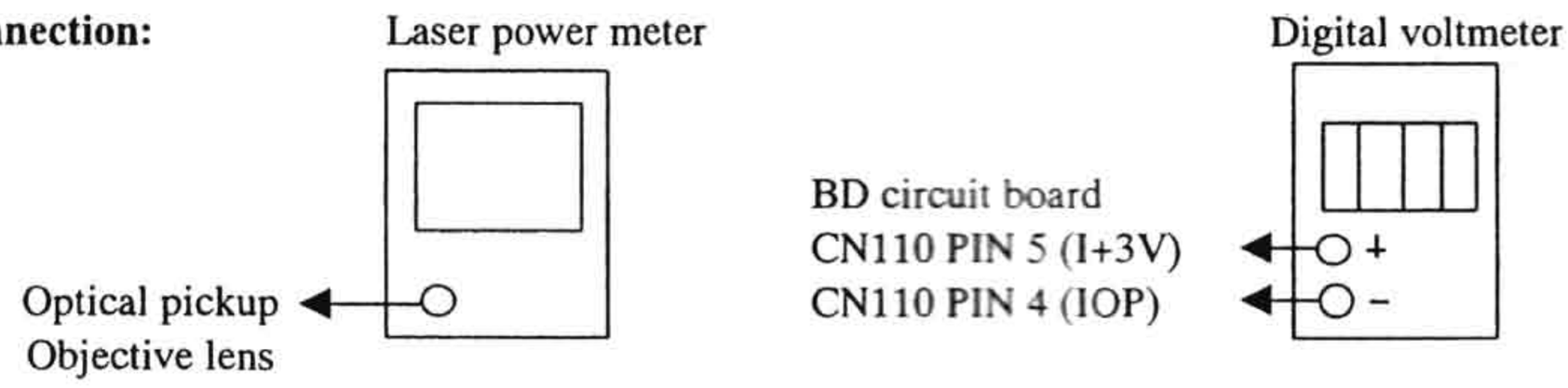

Adjustment:

1. Install the laser power meter on the objective lens of the laser pickup.
   (If it cannot be installed properly, move the pickup using the << or >> key.)
   Connect the digital voltmeter to CN110 Pin 5 (I+3V) and CN110 pin 4 (IOP).
2. Turn the JOG knob until "LDPWR ADJUST" is displayed.
   (Laser power: For adjustment)
3. Press the YES key to display "LD 0.9mW $□□".
4. Adjust JOG knob such that the laser power reading becomes 0.86mW～0.92mW.
   Press the YES key to display "LD SAVE $□□".
5. Press the YES key to display "LD 7.0mW $□□".
6. Adjust JOG knob such that the laser power reading becomes 6.9mW～7.1mW.
   Press the YES key to display "LD SAVE $□□".
7. Turn the JOG knob until "LDPWR CHECK" is displayed.
8. Press the YES key to display "LD 0.9mW $□□".
   Laser power meter reading: 0.85mW ～ 0.91mW
9. Press the YES key to display "LD 7.0mW $□□".
   Verify that the readings on the laser power meter and the digital voltmeter are within the value specified below.

Standard value:

Laser power meter reading: 7.0mW±0.1mW
Digital voltmeter reading: Optical pickup displayed value ±10%
(Optical pickup label)

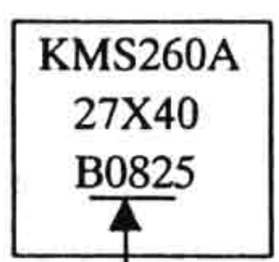

In this case, Iop=82.5mA
Iop (mA) = Digital voltmeter reading (mV)/1 (Ω)

10. Press the EDIT/NO key to display "LDPWR CHECK", then stop the laser emission.
    (The EDIT/NO key is always accepted to stop the laser emission.)

3.3 Traverse Adjustment

Connection :

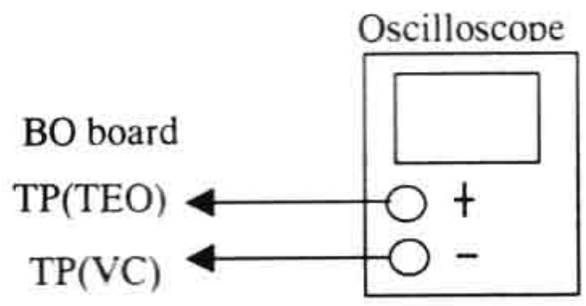

Adjusting Method :

1. Connect an oscilloscope to TP(TEO) and TP(VC) of the BD board.
2. Load a MO disc (any available on the market).
3. Press the << key or >> key and move the optical pickup outside the pit.
4. Rotate the JOG knob and display "EFBAL ADJUST"
5. Press the YES key and display "EFBAL=○○MO-W".
6. Rotate the JOG knob so that waveforms of the oscilloscope becomes the specified value.
   (When the JOG knob is rotated, the ○○ of "EFB=○" changes and the waveform changes.)
   in this adjustment, waveform varies at intervals of approx. 3%. Adjust the waveform so that the specified value is satisfied as possible.
   (MO groove write power traverse adjustment)
   (Traverse Waveform)

Spec. : A=B

7. Press the YES key , display "EFBAL=○○ SAVE" for a mount and save the adjustment results in the non-volatile memory.
   Next "EFBAL ADJUST" is displayed.
8. Press the EJECT key and take out the disc.

3.4 Adjustment point

BD PC board(side A)

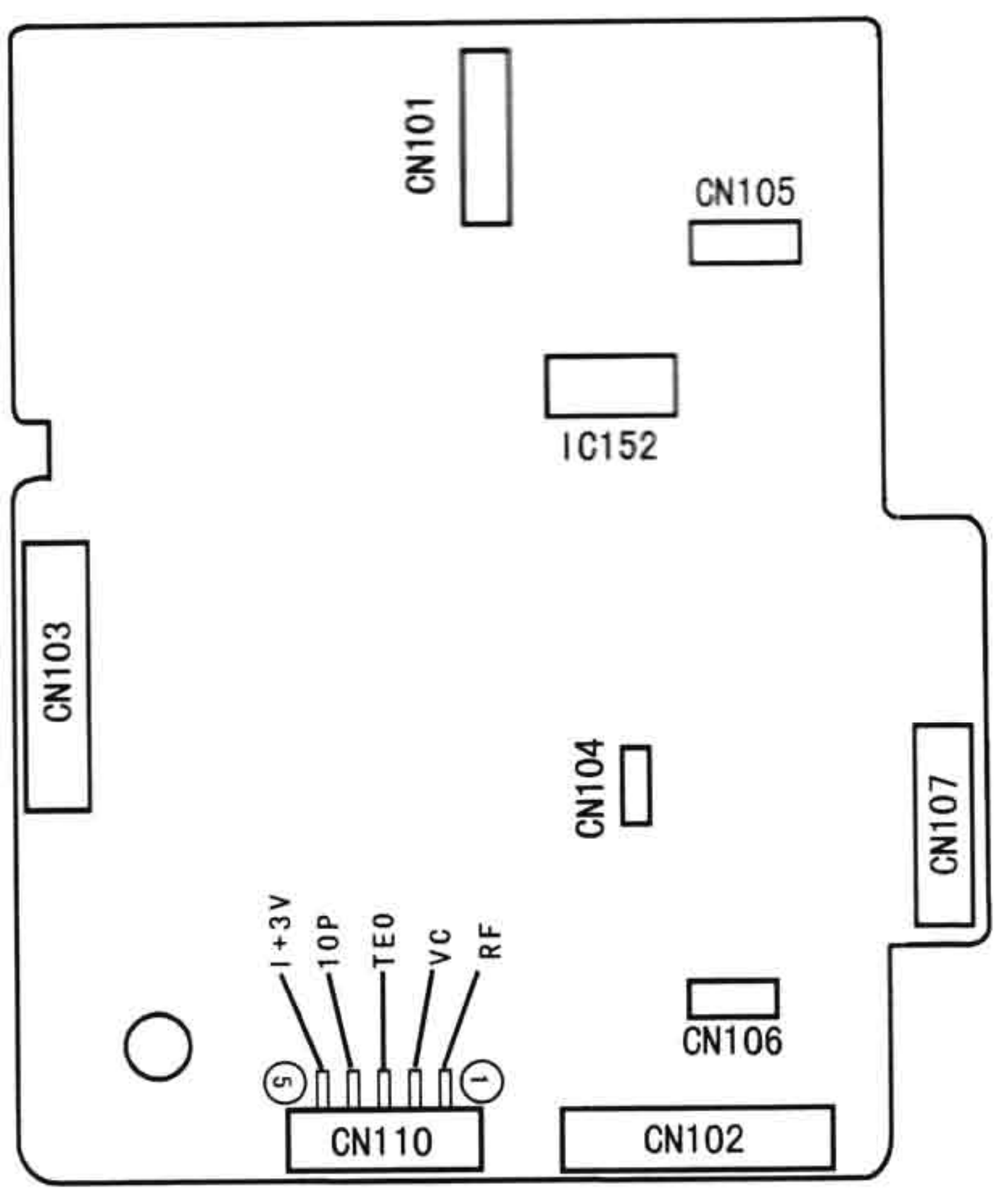

BD PC board(side B)

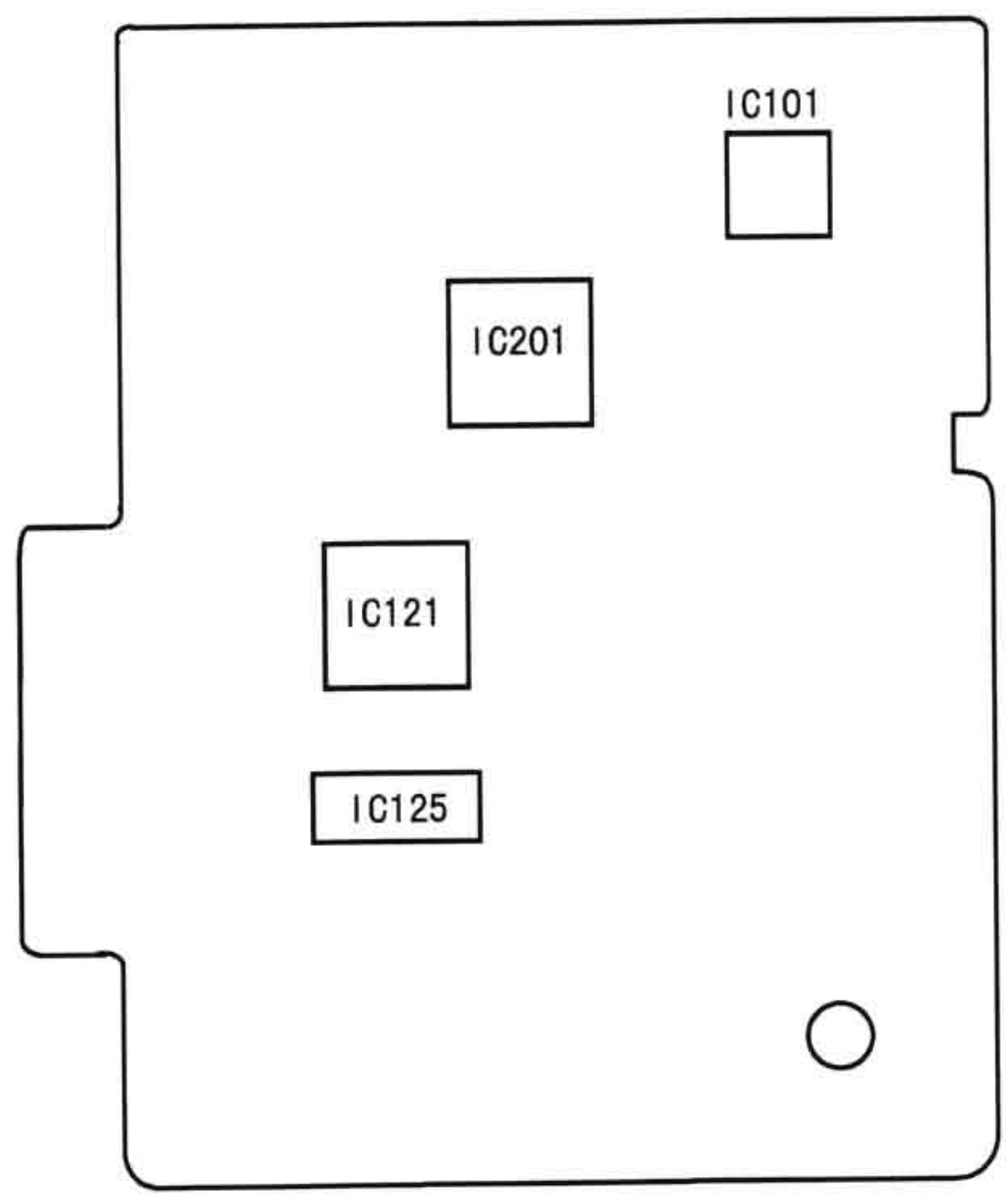

MD MESSAGE LIST

The following table explains the various messages that appear in the display.

Message	Meaning
Blank Disc	A recordable MD without disc or track names is inserted.
Cannot Copy	An attempt was made to make a second digital copy from a digitally dubbed MD.
Cannot Edit	An attempt was made to edit a playback-only disc.
Cannot Rec	An attempt was made to record onto a playback-only disc.
Cannot Set	An attempt was made to set a timer while another timer is operating, or an attempt was made to set the clock using ACCUCLOCK.
D. In Unlock	The digital equipment (CD player, DAT, etc.) has not been connected properly. Otherwise, the connected digital equipment is not operating properly.
Disc Error	The disc is abnormal (scratched or missing a TOC).
Disc Full	The disc is full.
FULL	An attempt was made to enter a character over the maximum character capacity while naming.
Impossible	The disc could not be edited.
MD Writing	The unit is writing the recorded or edited contents to the MD.
Mecha Error	An error occurred in the unit's internal mechanism.
Memory Full	An attempt was made to store a 26th track or a 31th channel.
Name Full	The naming capacity of the disc or unit has reached its limit.
No Change	The name has not been changed.
No Disc	There is no disc in the unit.
No Track	The inserted disc has a disc name but no tracks.
Over	In pause mode (when playing is paused), the ►► (Fast Forward) button was pressed to the end of the disc.
Protected	The inserted disc is record-protected.
Recording	An attempt was made to switch to another sourse while recording.
Retry Error	The recording attempt failed due to a consecutive disturbance because of the scratched on the MD or vibration.
Sorry	An attempt was made to combine tracks which can not be combined, or to divide a track at the beginning of it.
TOC Error U-TOC Error	The reading of the disc or the recording onto the disc failed.

MD MECHANISM PC BOARD PARTS LIST

NSP: No Spare parts

REF. No.	PART No.	DESCRIPTION	NOTE
	A4917-080-A	MD Mount	NSP
	1668-261-11	PWB,L-SW	
	1668-262-11	PWB,D-SW	
CN101	1691-385-21	Connector, FFC/FPC 21P	
X201	1760-174-11	Vibrator, Ceramic,12MHz	
X101	1781-355-11	Vibrator, Crystal, 22MHz	
CN102	1774-794-11	Connector, FFC/FPC 26P	
CN103	1779-341-11	Connector, FFC/FPC 23P	
	1771-092-21	Push Switch	
	1771-326-11	Push lever Switch	
	1771-327-11	2pin Push Switch	
CN110	1774-731-21	Pin, 5P Connector (PC Board)	
CN106	1776-336-21	Connector, FFC/FPC 6P	
CN104	1778-283-11	Connector, FFC/FPC 4P	
CN105	1779-345-11	Connector, FFC/FPC 7P	
D181,D183	8719-046-87	Diode, F1J6	
D101	8719-988-61	'Diode, 1SS355TE-17	
D102	8719-036-81	Diode,RD3.9SB1-T1	
Q182	8729-017-65	Transistor, 2SK1764KY	
Q181	8729-018-75	Transistor, 2SJ278MY	

REF. No.	PART No.	DESCRIPTION	NOTE
Q102	8729-026-52	Transistor, 2SA1576A-T106-QR	
Q105	8729-140-75	Transistor, 2SD-999T1-CLCK	
Q101,Q163	8729-028-91	Transistor, DTA144EUA-T106	
Q303	8729-028-73	Transistor, DTA114EUA-T106	
Q103,Q104	8729-028-96	Transistor, DTC114EUA-T106	
Q301,Q302	8729-920-31	Transistor, DTC343TK-T146	
Q162	8729-101-07	Transistor, 2SB798-T1DK	
IC103	8729-903-10	Transistor, FMW1-T-148	
IC101	8752-080-95	IC, CXA2523AR	
IC121	8752-384-47	IC, CXD2652AR	
IC122	8759-234-20	IC, TC7S08F	
IC302	8759-701-40	IC,NJM3404AM-TE1	
IC301	8759-471-38	IC,AK4520A-VF-E2	
IC152	8759-430-25	IC, BH6511FS-E2	
IC171	8759-484-73	IC, BR24C01AF-E2	
IC125	8759-498-44	IC, MSM51V4400D-70TSK	
IC181	8759-523-35	IC,TC74ACT02FT(EL)	
IC201	8752-907-68	IC,CXP740010-022R	
IC202	8759-823-87	IC, LB1638MTE-L	

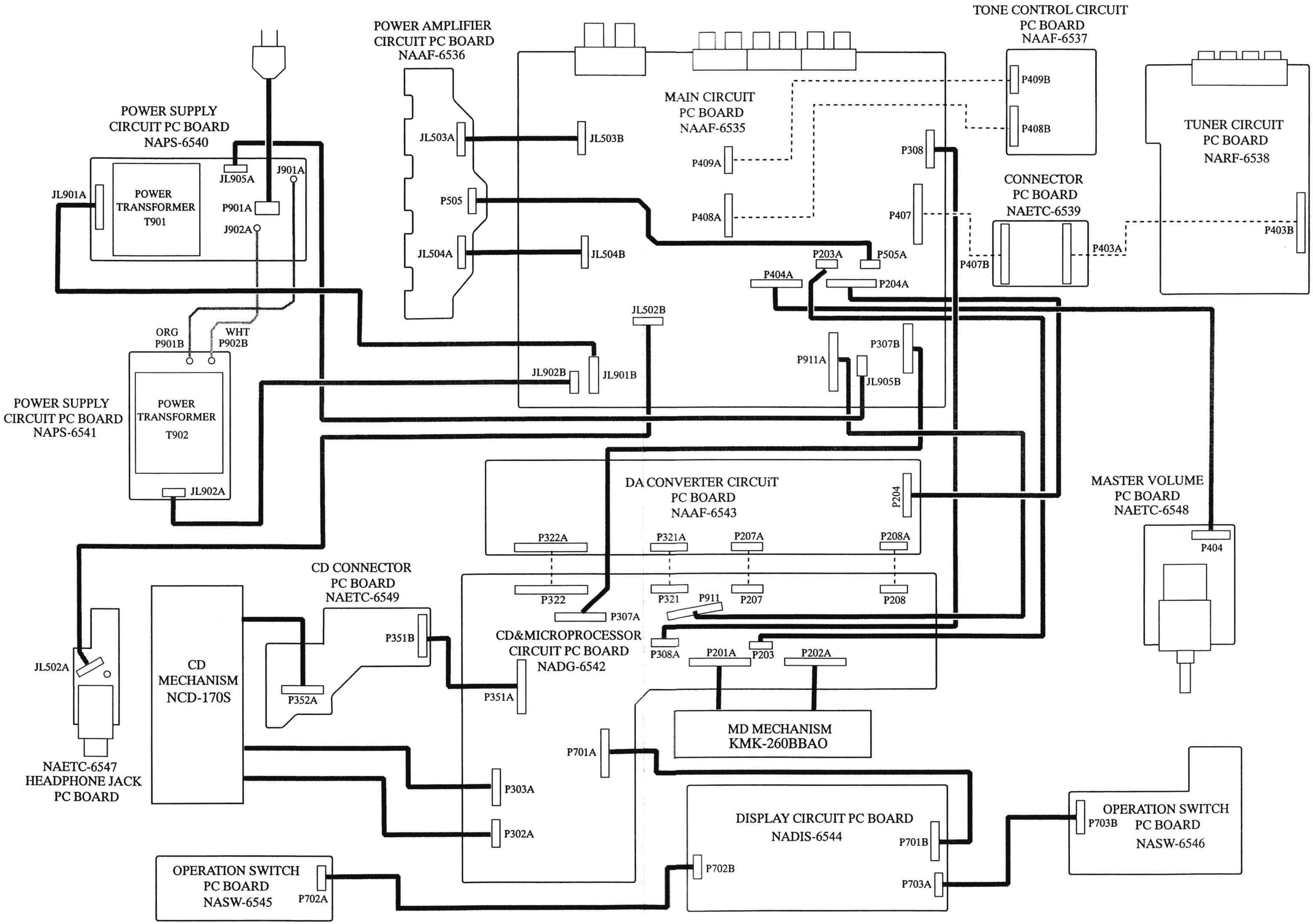
POWER AMPLIFIER CIRCUIT PC BOARD NAAF-6536
TONE CONTROL CIRCUIT PC BOARD NAAF-6537
MAIN CIRCUIT PC BOARD NAAF-6535
TUNER CIRCUIT PC BOARD NARF-6538
POWER SUPPLY CIRCUIT PC BOARD NAPS-6540
POWER TRANSFORMER T901
CONNECTOR PC BOARD NAETC-6539
POWER SUPPLY CIRCUIT PC BOARD NAPS-6541
POWER TRANSFORMER T902
DA CONVERTER CIRCUIT PC BOARD NAAF-6543
MASTER VOLUME PC BOARD NAETC-6548
CD CONNECTOR PC BOARD NAETC-6549
CD MECHANISM NCD-170S
CD&MICROPROCESSOR CIRCUIT PC BOARD NADG-6542
MD MECHANISM KMK-260BBAO
NAETC-6547 HEADPHONE JACK PC BOARD
DISPLAY CIRCUIT PC BOARD NADIS-6544
OPERATION SWITCH PC BOARD NASW-6546
OPERATION SWITCH PC BOARD NASW-6545
JL503A
JL503B
P505
JL504A
JL504B
P409A
P408A
P409B
P408B
P308
P407
P407B
P403A
P403B
P203A
P505A
P404A
P204A
JL502B
P307B
P911A
JL905B
JL902B
JL901B
JL901A
JL905A
J901A
P901A
J902A
ORG P901B
WHT P902B
JL902A
P204
P322A
P321A
P207A
P208A
P322
P321
P911
P207
P208
P307A
P351B
P352A
P351A
P308A
P201A
P203
P202A
P404
JL502A
P701A
P303A
P302A
P702B
P701B
P703A
P703B
P702A

BLOCK DIAGRAM

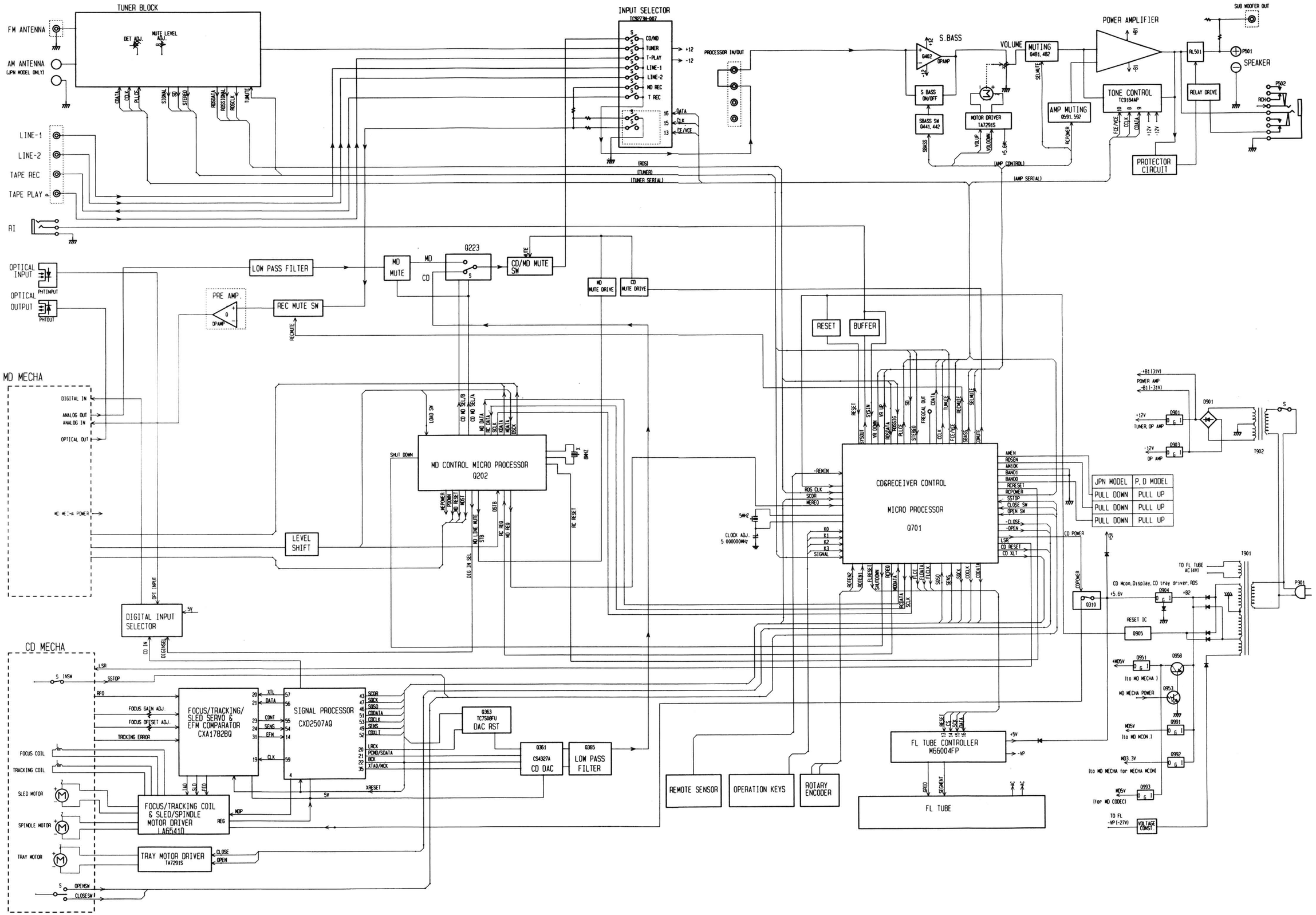

MAIN CIRCUIT PC BOARD (NAAF-6535)

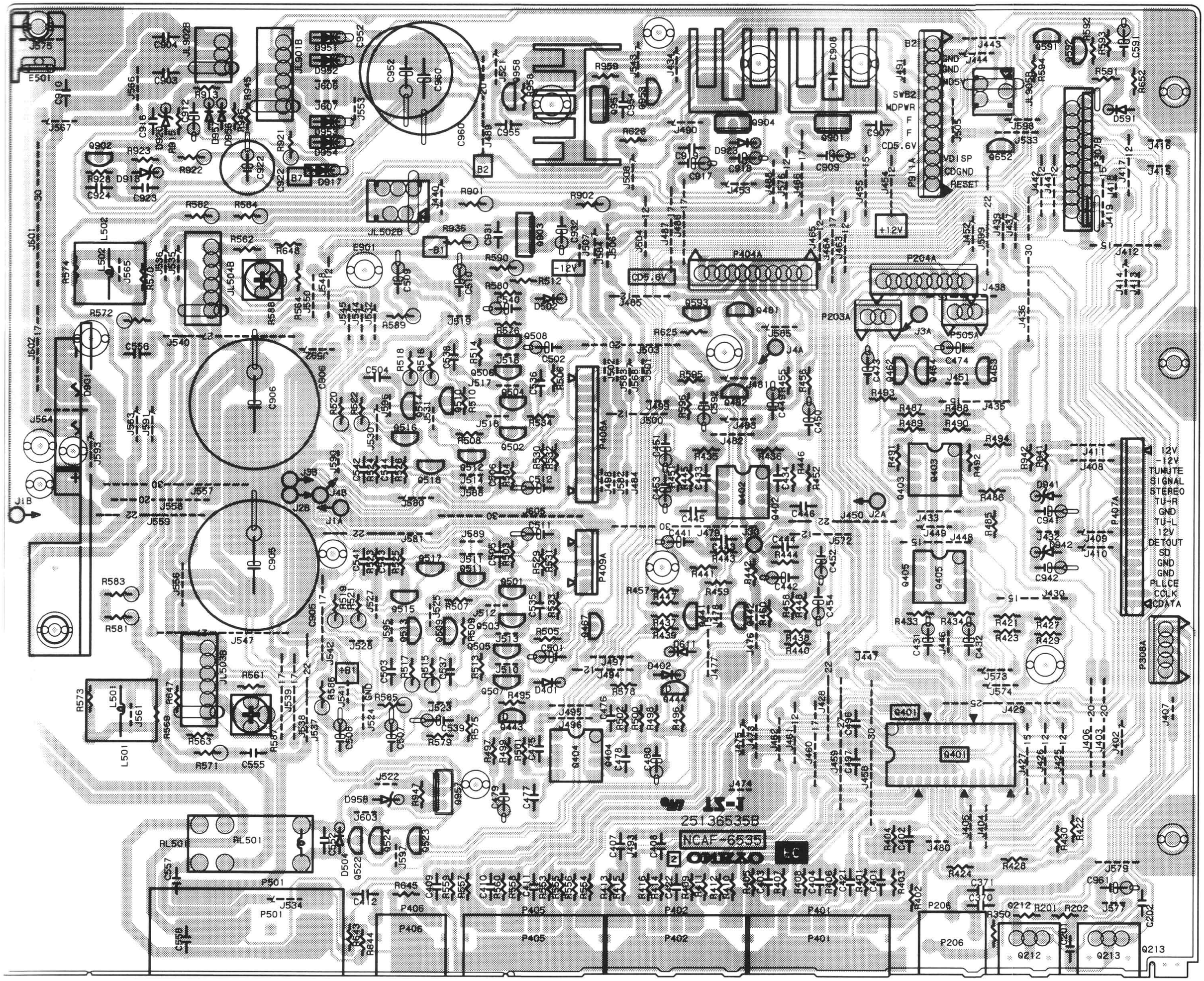

POWER AMPLIFIER CIRCUIT PC BOARD (NAAF-6536)

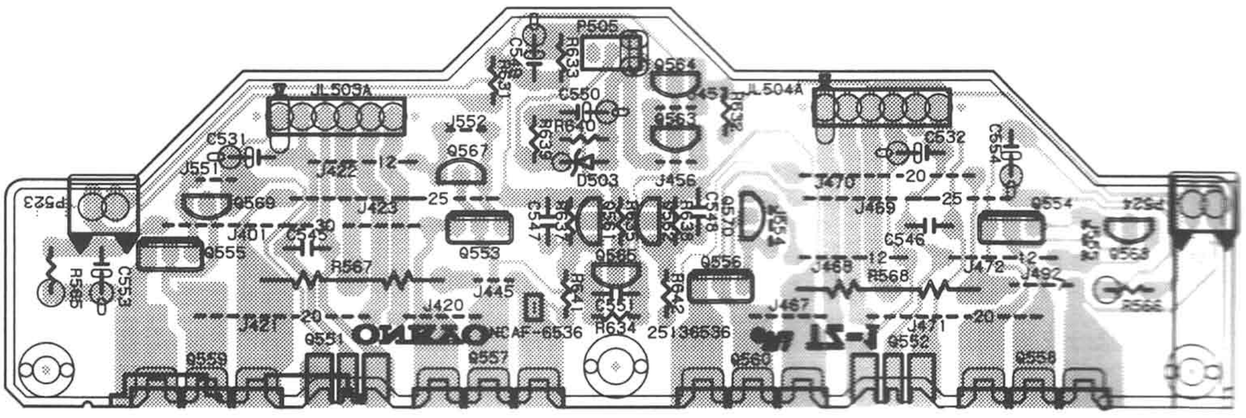

TONE CONTROL CIRCUIT PC BOARD (NAAF-6537)

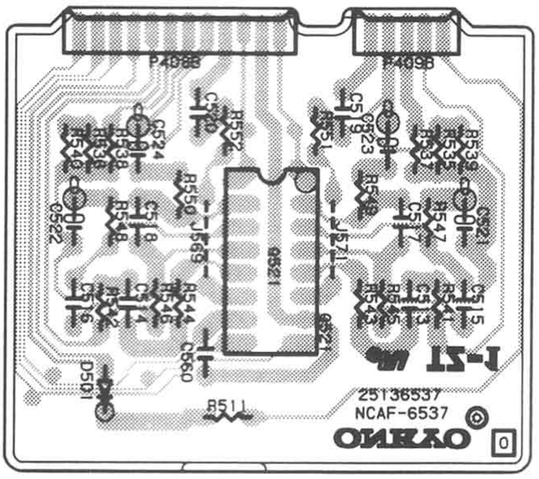

POWER SUPPLY CIRCUIT PC BOARD (NAPS-6541)

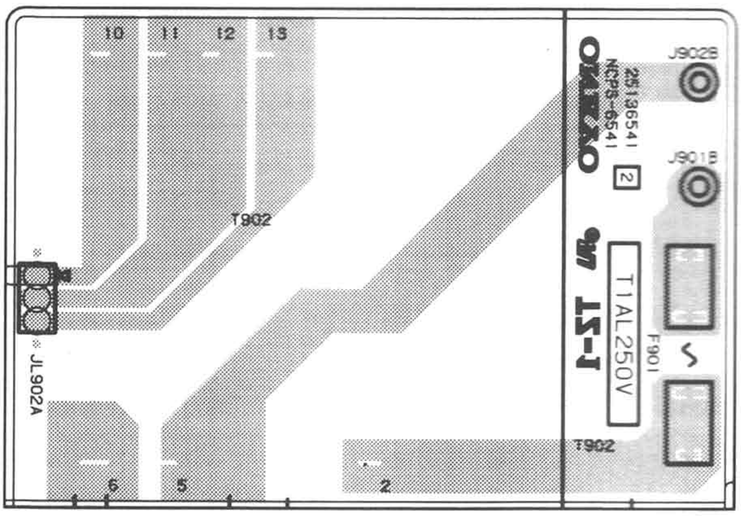

POWER SUPPLY CIRCUIT PC BOARD (NAPS-6540)

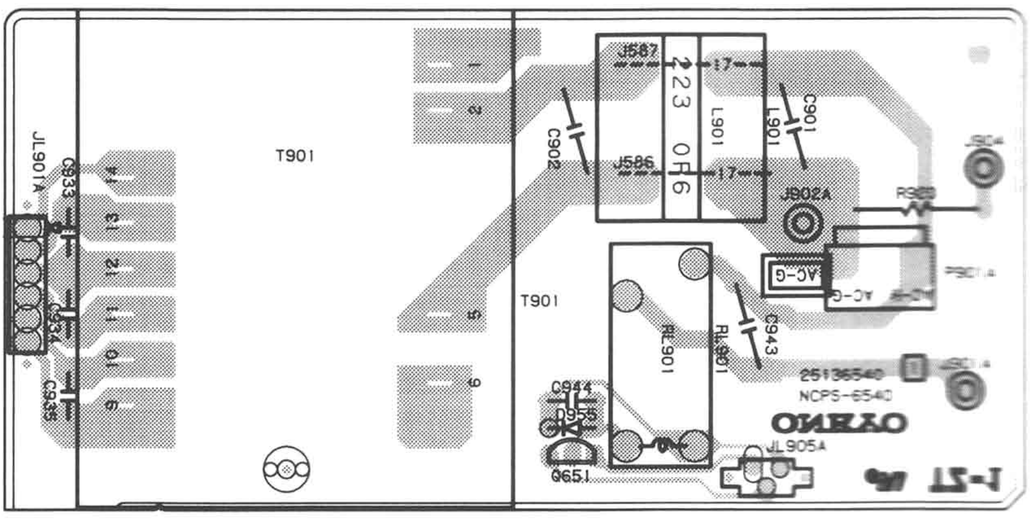

SCHEMATIC DIAGRAM (AMP)

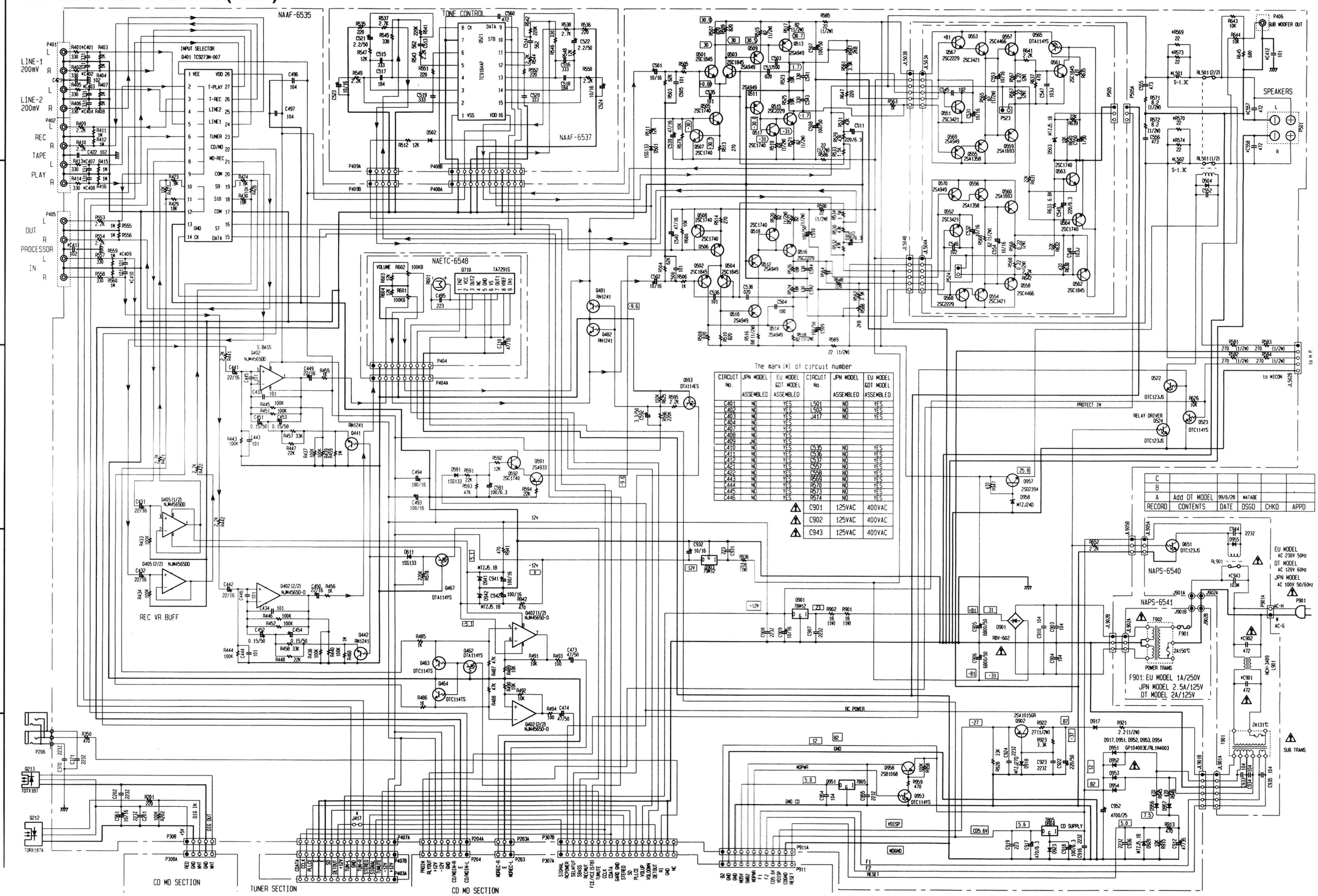

The mark (*) of circuit number

CIRCUIT No.	JPN MODEL ASSEMBLED	EU MODEL GDT MODEL ASSEMBLED	CIRCUIT No.	JPN MODEL ASSEMBLED	EU MODEL GDT MODEL ASSEMBLED
C401	NO	YES	L501	NO	YES
C402	NO	YES	L502	NO	YES
C403	NO	YES	J417	NO	YES
C404	NO	YES			
C407	NO	YES			
C408	NO	YES			
C409	NO	YES			
C410	NO	YES	C535	NO	YES
C411	NO	YES	C536	NO	YES
C412	NO	YES	C537	NO	YES
C421	NO	YES	C567	NO	YES
C422	NO	YES	C568	NO	YES
C443	NO	YES	C569	NO	YES
C444	NO	YES	R570	NO	YES
C445	NO	YES	R573	NO	YES
C446	NO	YES	R574	NO	YES
⚠ C901	125VAC	400VAC			
⚠ C902	125VAC	400VAC			
⚠ C943	125VAC	400VAC			

C					
B					
A	Add DT MODEL	99/6/28	MATABE		
RECORD	CONTENTS	DATE	DSGD	CHKD	APPD

PRINTED CIRCUIT BOARD VIEW FROM BOTTOM SIDE

TUNER CIRCUIT PC BOARD (NARF-6538)

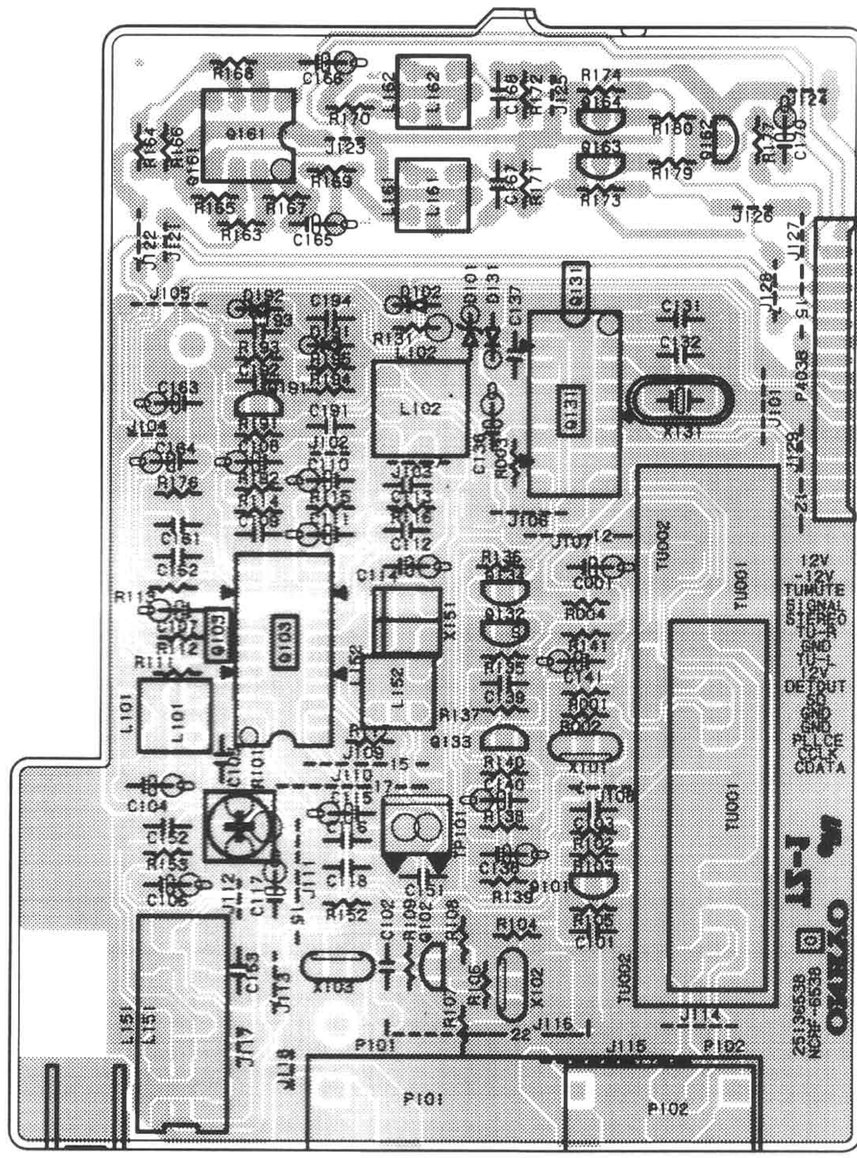

CONNECTOR PC BOARD (NAETC-6539)

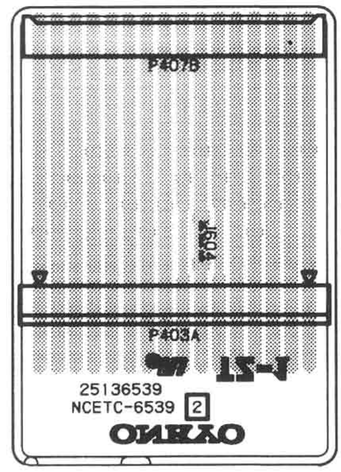

IC BLOCK AND DESCRIPTIONS

Q131:LM7001 (PLL Synthesizer and Controller)

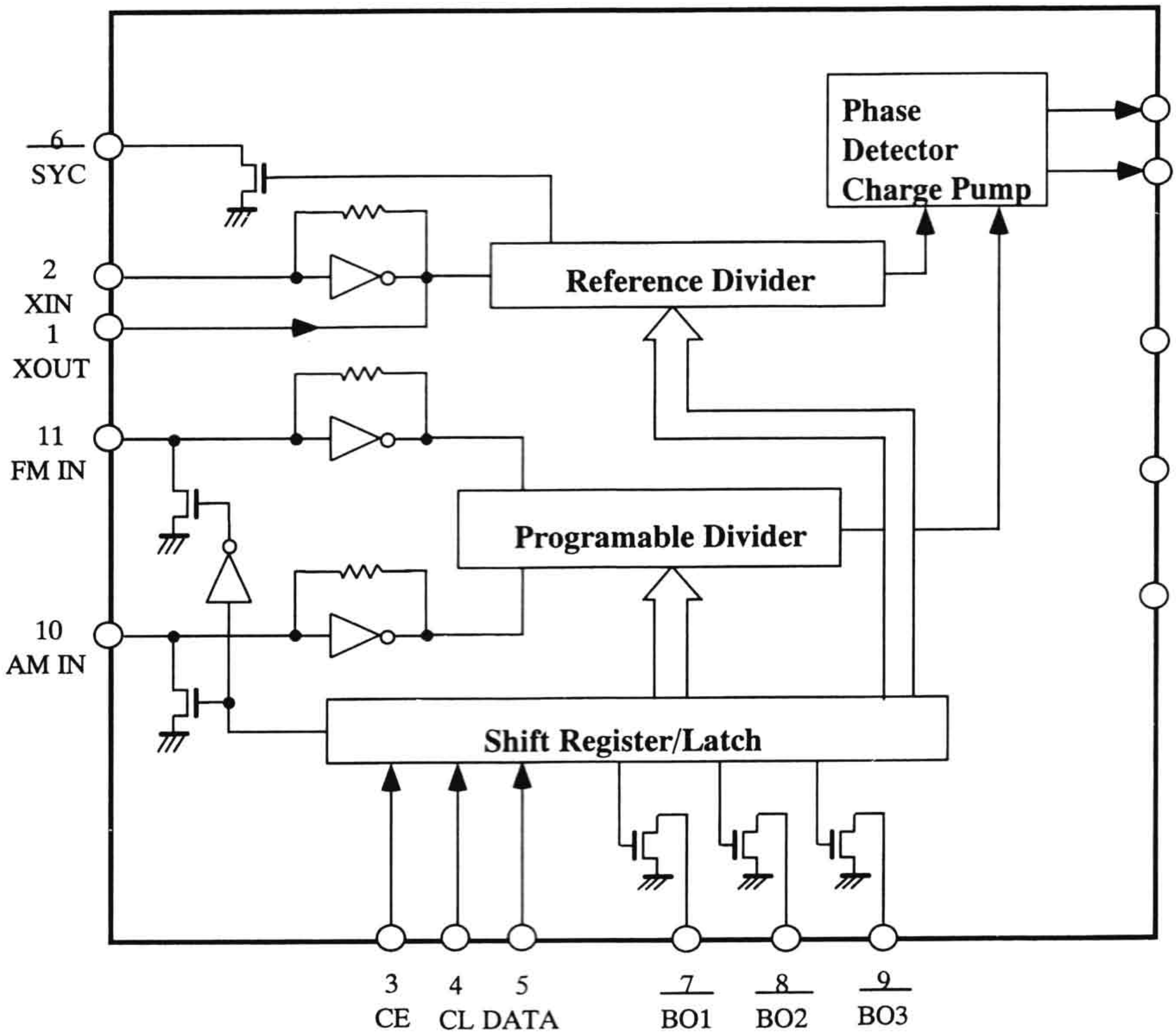

PIN No.	SYMBOL	DESCRIPTION
1	XOUT	Connect the 7.2MHz crystal resonator.
2	XIN	
3	CE	Chip enable terminal. Connect to the terminal PLLCE1 of microprocessor.
4	CL	Serial clock input terminal. Connect to the terminal PLLCL of microprocessor.
5	DATA	Serial data input terminal. Connect to the terminal PLLDATA of microprocessor.
6	SYN	Not used.
7	SAT/CANLE	Power source control terminal for DSR. Cable at the high level and Satellite at low.
8	LPF	LPF selector output terminal.
9	ANT	Antenna selector output terminal. A at high level and B at low level.
10	AMIN	AM local oscillator input terminal.
11	FMIN	FM local oscillator input terminal.
12	VDD1	Power source terminal for back-up.
13	VDD2	Power source terminal.
14	PD1	Phase comparator output.
15	PD2	Phase comparator output.
16	Vss	Ground terminal.

SCHEMATIC DIAGRAM (TUNER)

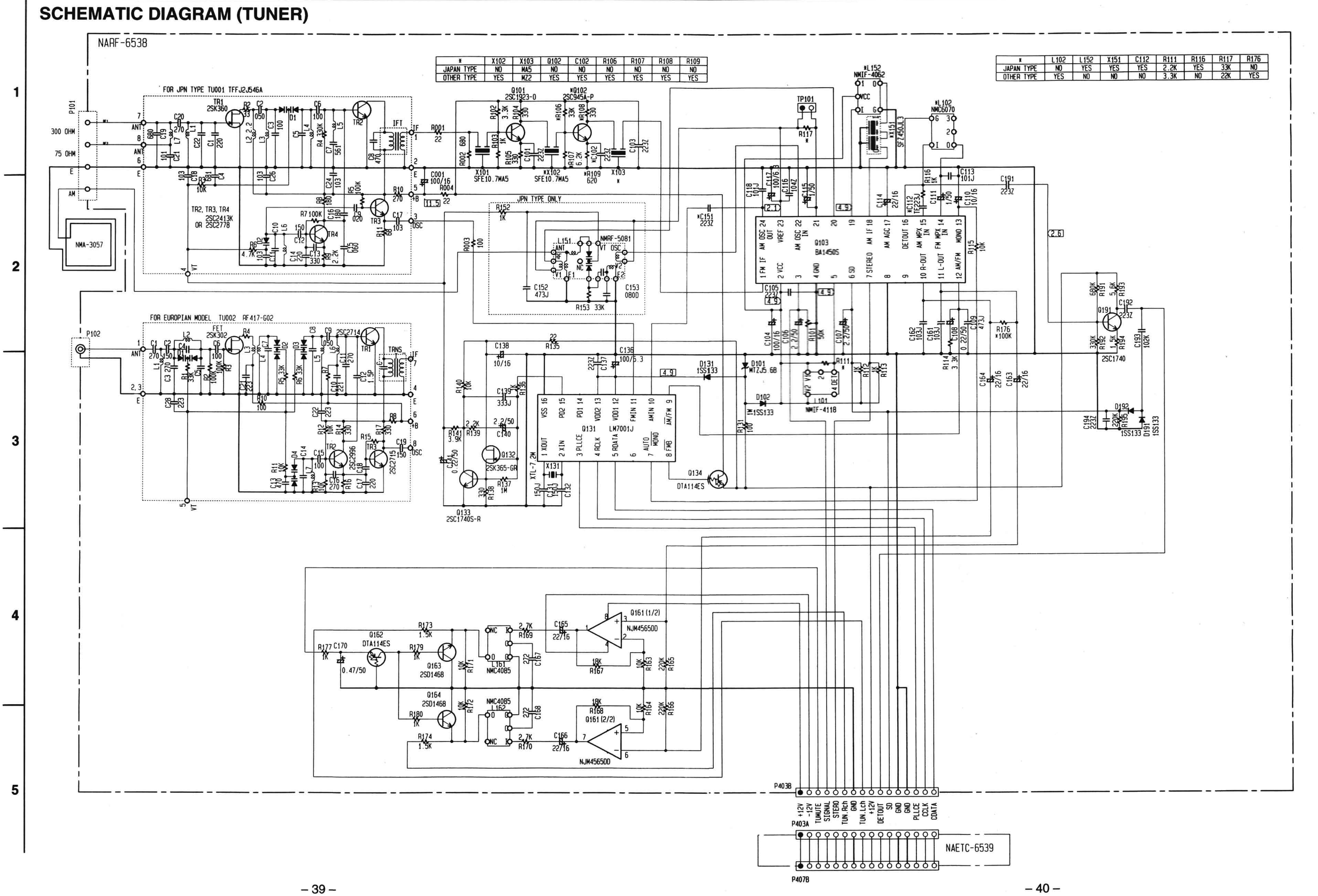

*	X102	X103	Q102	C102	R106	R107	R108	R109
JAPAN TYPE	NO	MA5	NO	NO	NO	NO	NO	NO
OTHER TYPE	YES	MZ2	YES	YES	YES	YES	YES	YES

*	L102	L152	X151	C112	R111	R116	R117	R176
JAPAN TYPE	NO	YES	YES	YES	2.2K	YES	33K	NO
OTHER TYPE	YES	NO	NO	NO	3.3K	NO	22K	YES

PRINTED CIRCUIT BOARD VIEW FROM BOTTOM SIDE

DA CONVERTER CIRCUIT PC BOARD (NADG-6543)

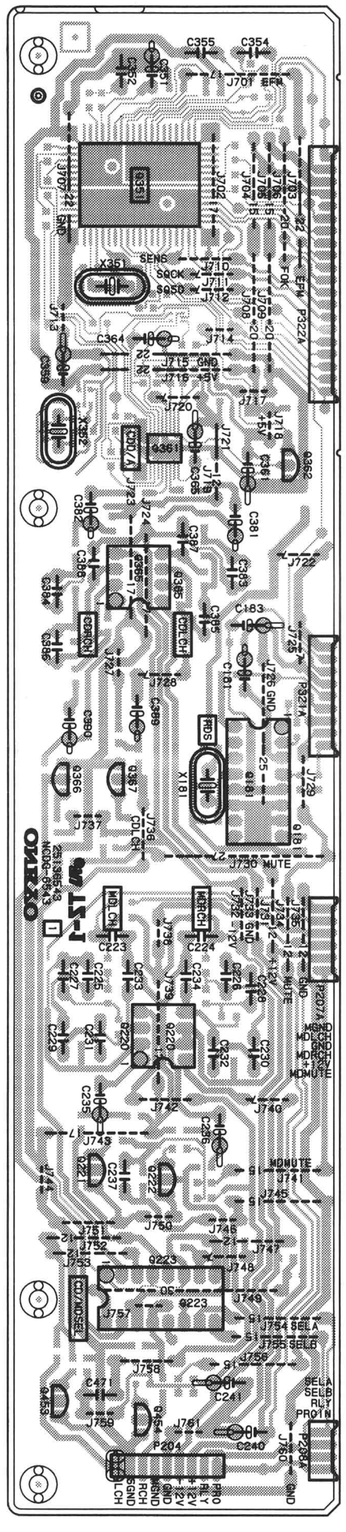

OPERATION SWITCH PC BOARD (NASW-6545)

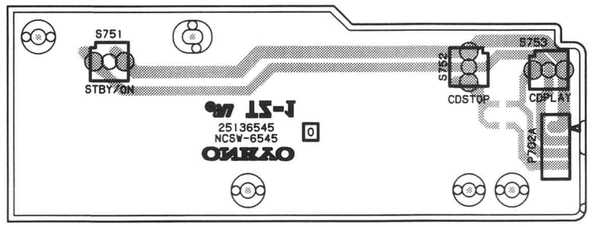

HEADPHONE JACK PC BOARD (NAETC-6547)

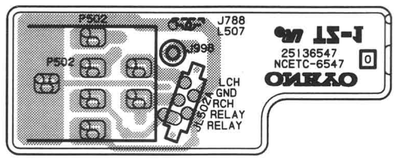

CD & MICROPROCESSOR CIRCUIT PC BOARD (NADG-6542

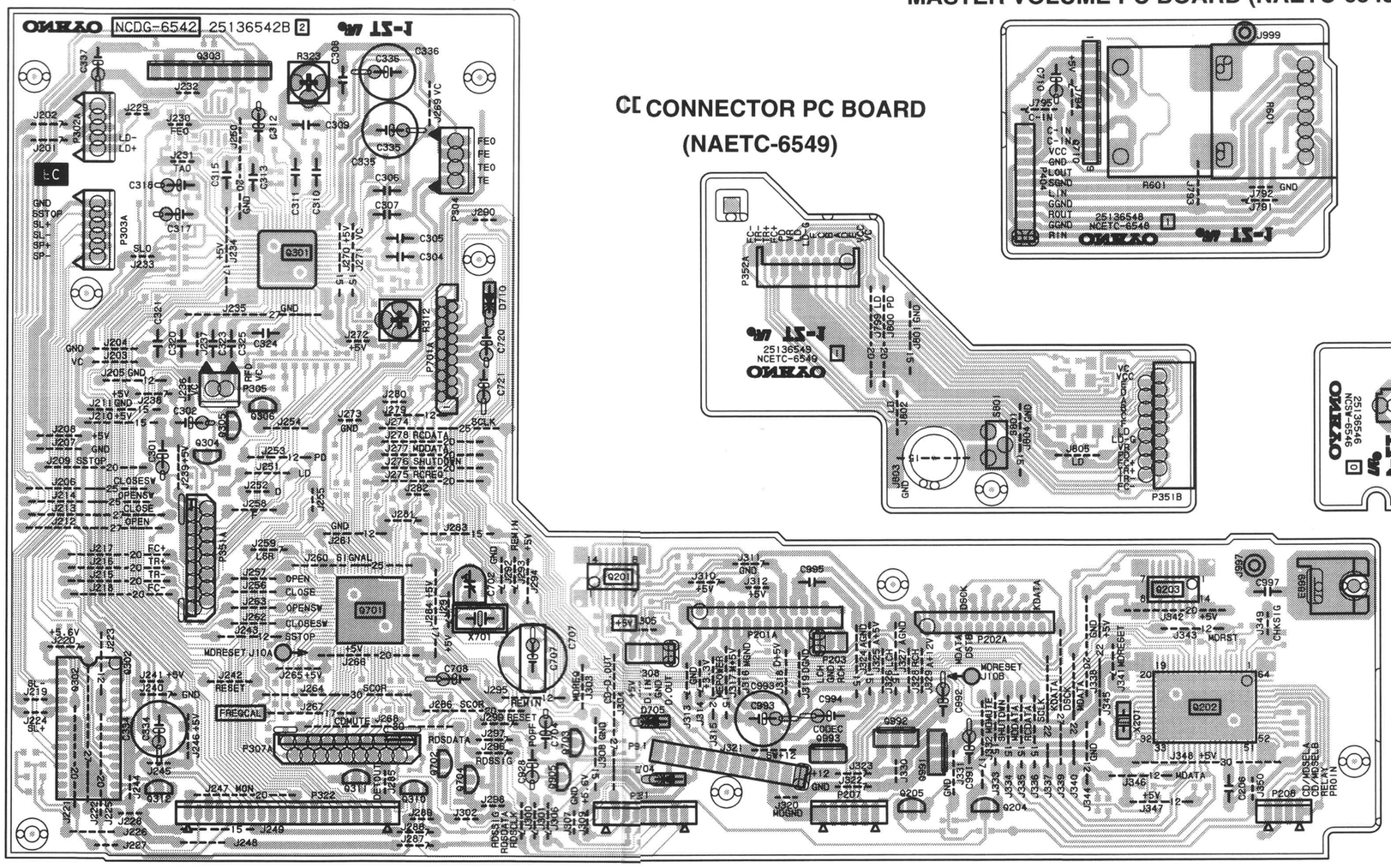

DISPLAY CIRCUIT PC BOARD (NADIS-6544)

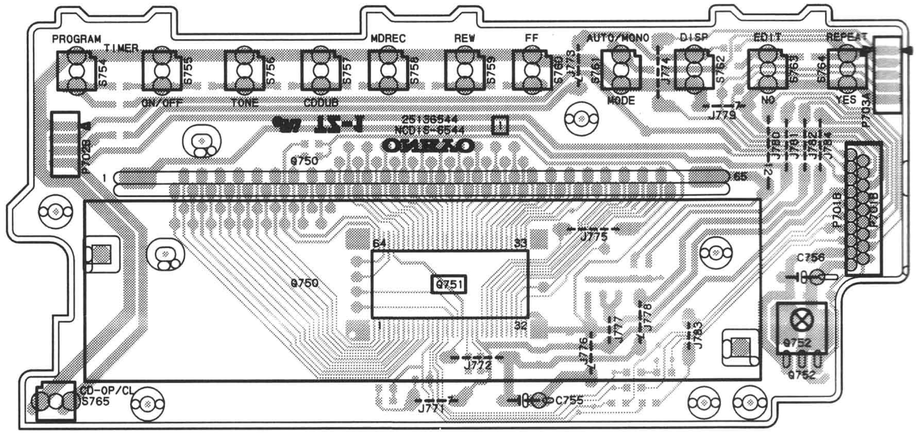

CD CONNECTOR PC BOARD (NAETC-6549)

MASTER VOLUME PC BOARD (NAETC-6548)

OPERATION SWITCH PC BOARD (NASW-6546)

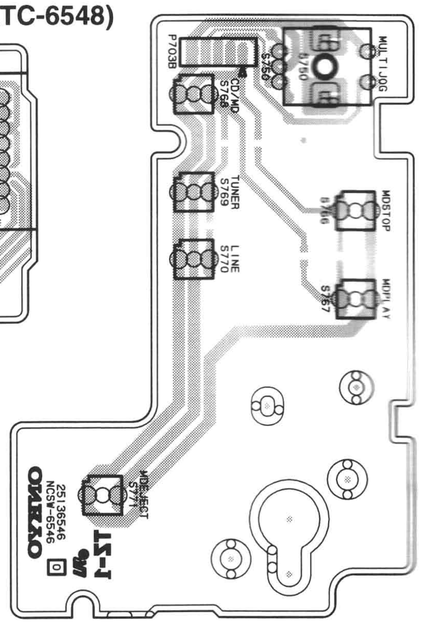

SCHEMATIC DIAGRAM (CD)

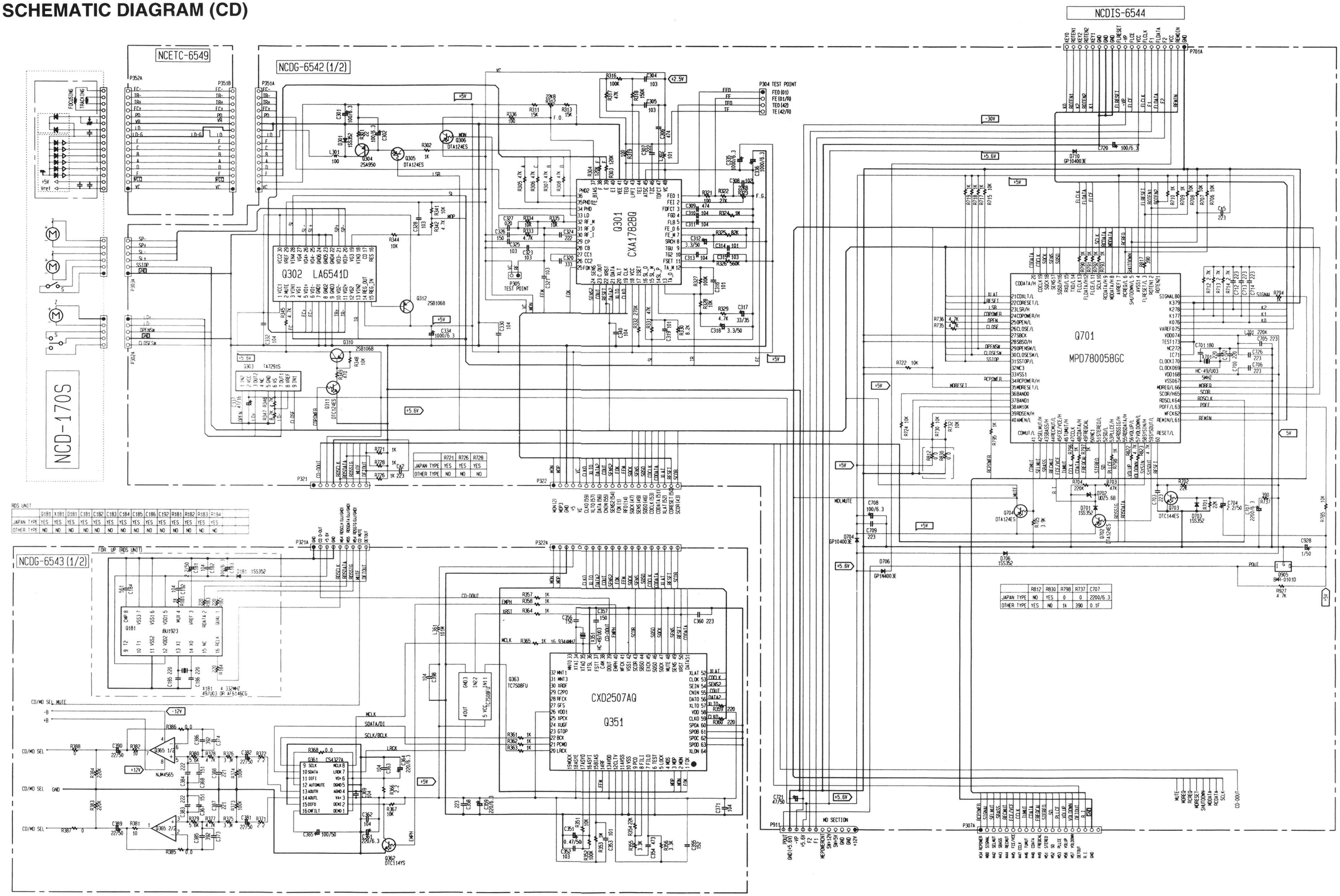

PRINTED CIRCUIT BOARD VIEW FROM BOTTOM SIDE

DISPLAY CIRCUIT PC BOARD (NADIS-6544)

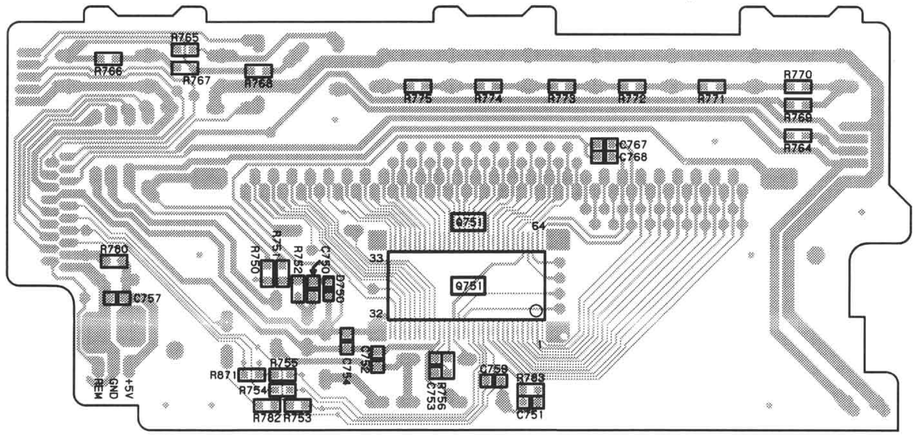

OPERATION SWITCH PC BOARD (NASW-6546)

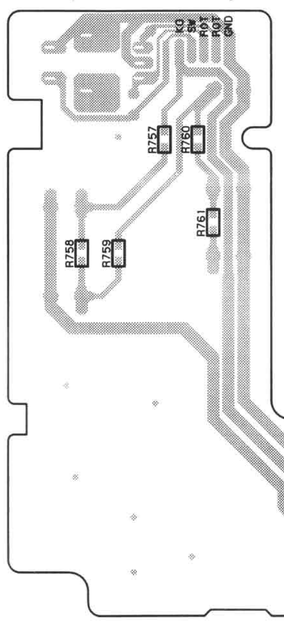

MASTER VOLUME PC BOARD (NAETC-6548)

CD CONNECTOR PC BOARD (NAETC-6549)

OPERATION SWITCH PC BOARD (NASW-6545)

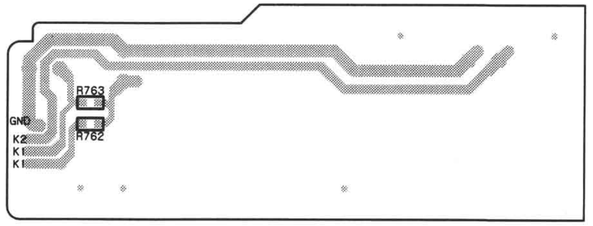

HEADPHONE JACK PC BOARD (NAETC-6547)

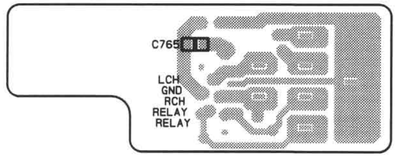

CD & MICROPROCESSOR CIRCUIT PC BOARD (NADG-6542)

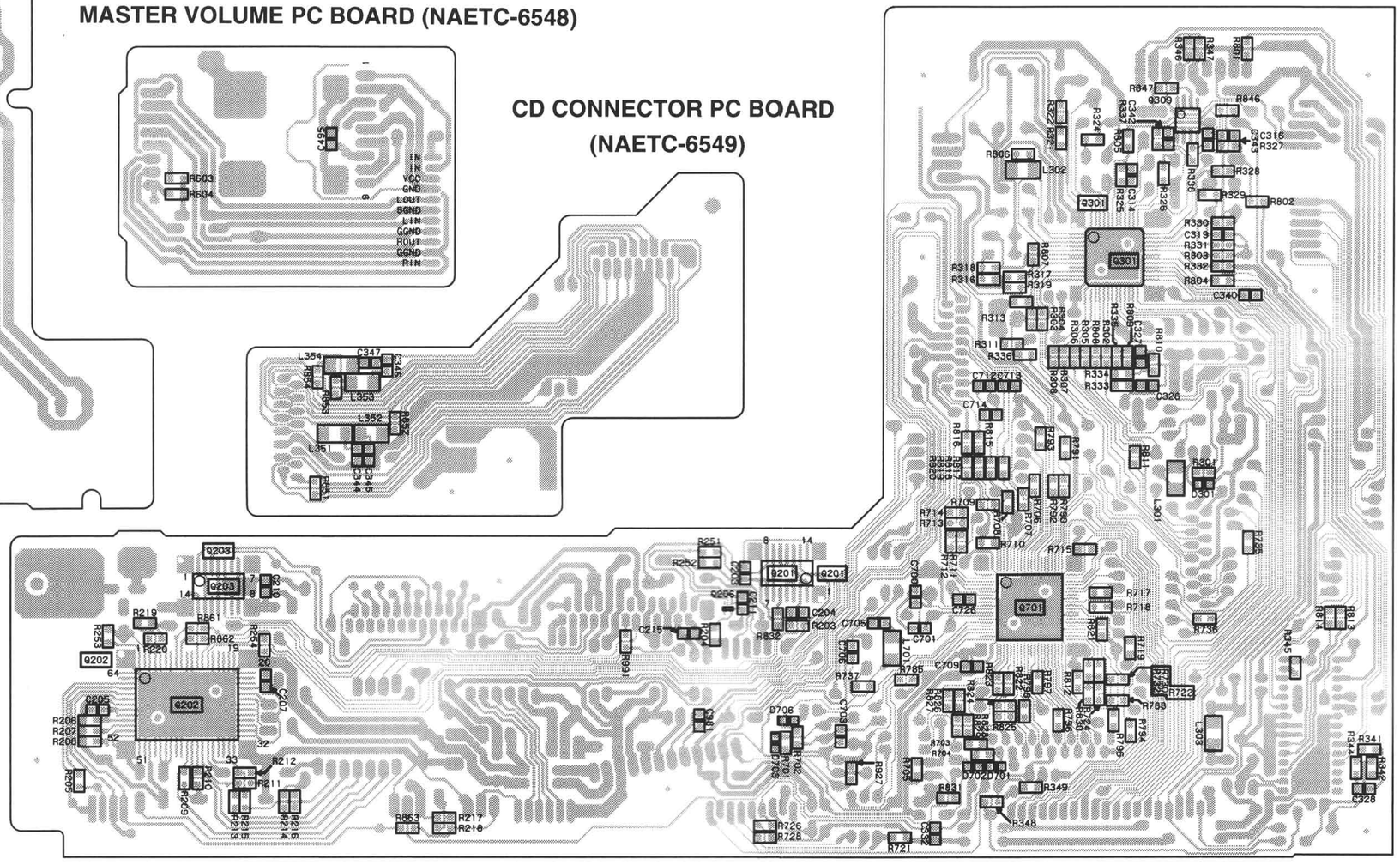
Q301
Q701
Q202
Q203
Q201
Q205
R847
Q309
R846
R806
L302
R328
R329
R802
R330
C319
R331
R803
R332
R804
C340
R313
R311
R336
R334
R333
C326
R301
D301
L301
R714
R713
R709
R706
R707
R710
R715
R717
R718
R736
R719
R722
R788
R794
R795
R785
R737
R727
R725
R726
R728
R721
R348
R349
R831
R345
R341
R342
R344
C328
L303
R219
R220
R861
R862
R221
C207
R206
R207
R208
R209
R210
R211
R212
R217
R218
R863
R251
R252
R203
R204
R832
C215
R869
C705
C701
C709
D706
D702
D701
R703
R704
R702
R701
R727
R725
R726
R728
R721
R348
R349
R831
R345
R341
R342
R344
C328
L303
R722
R788
R794
R795
R785
R737

SCHEMATIC DIAGRAM (MD)

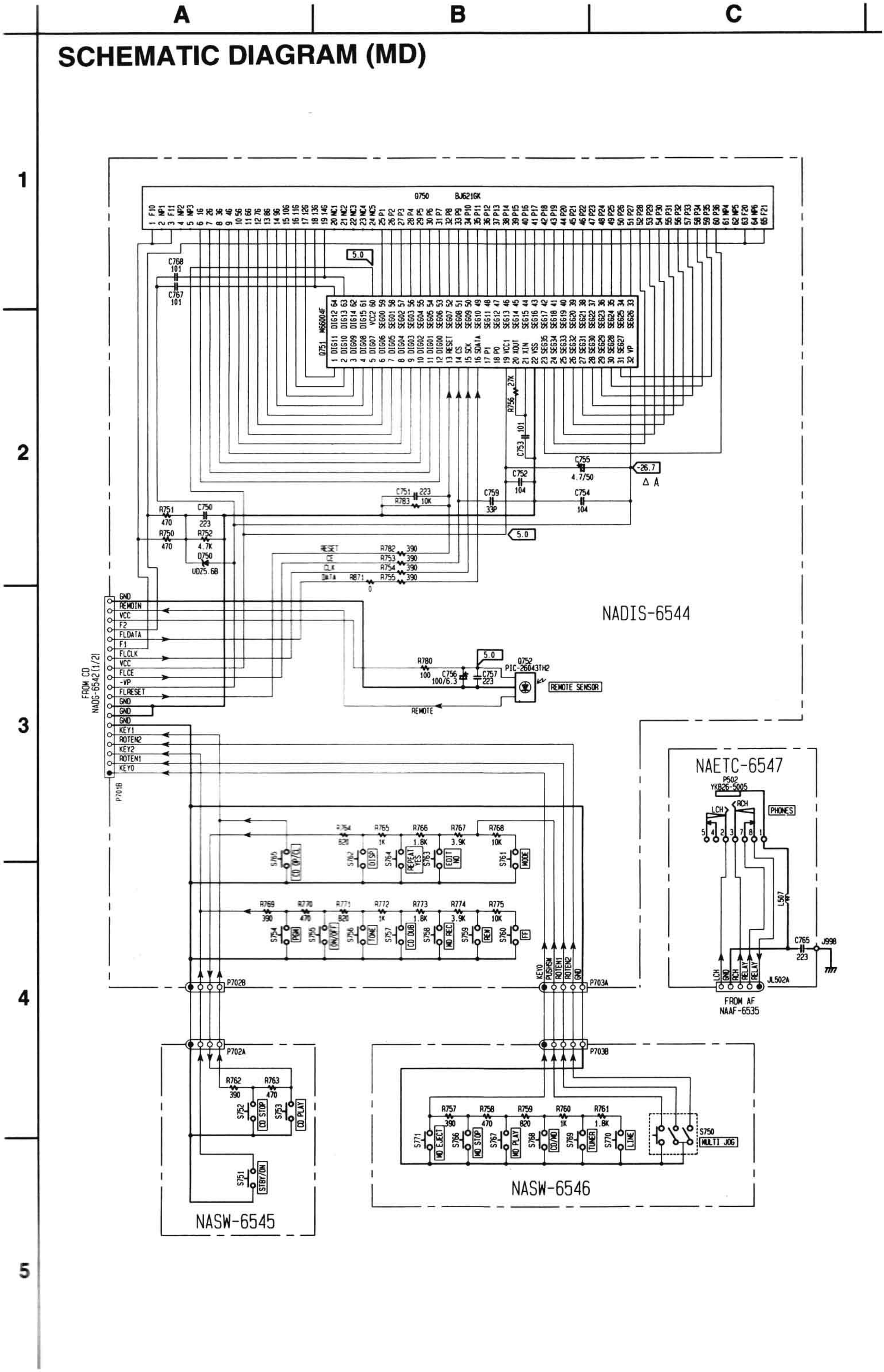

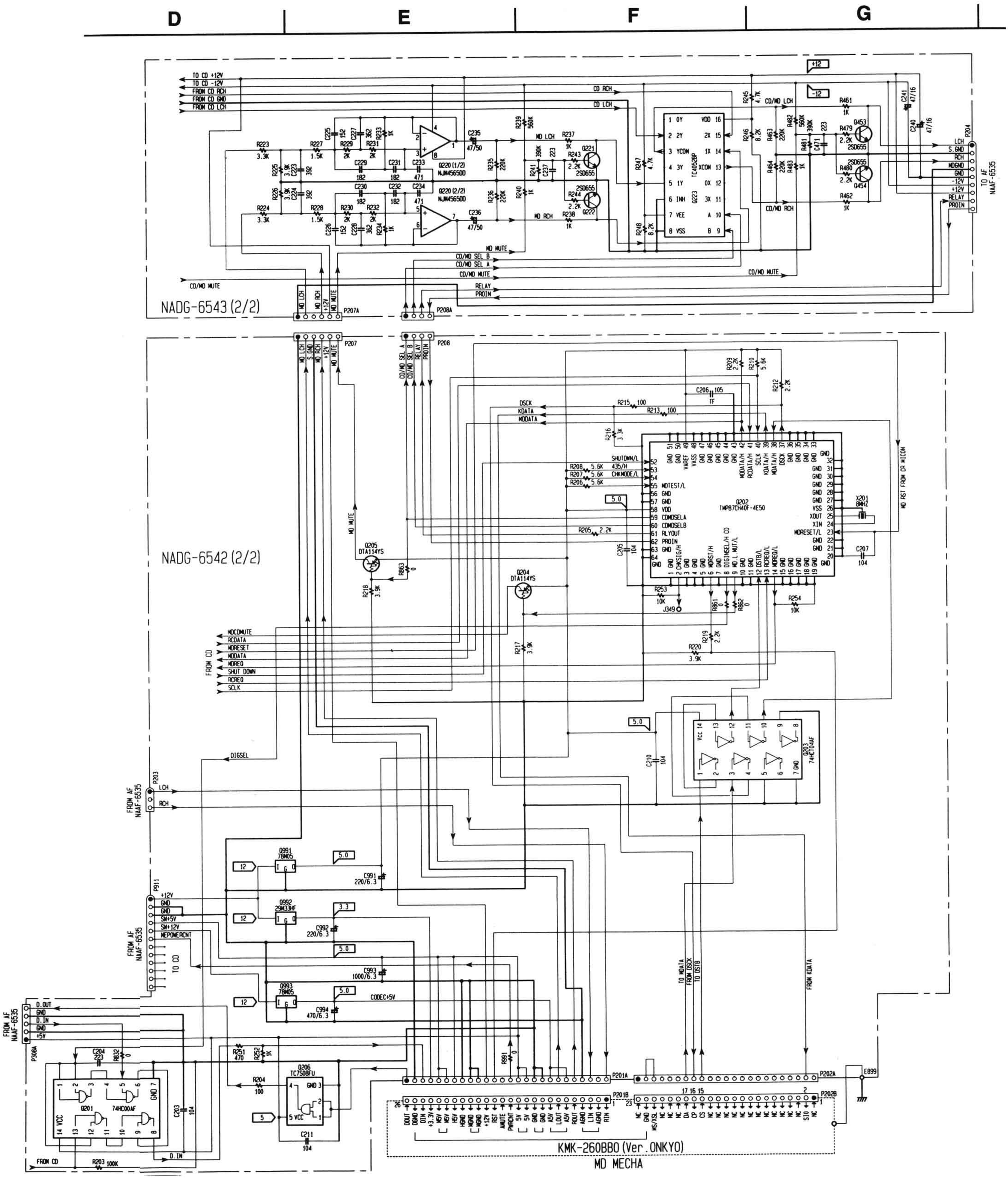
D
E
F
G
NADG-6543 (2/2)
NADG-6542 (2/2)
KMK-260BB0 (Ver.ONKYO)
MD MECHA
TO AF NAAF-6535
FROM AF NAAF-6535
TO CD
FROM CD
Q202 TMP87CH40F-4E50
Q223 TC4052BP
Q203 74HC04AF
Q201 74HC00AF
Q206 TC7S08FU
Q220 (1/2) NJM456500
Q220 (2/2) NJM456500
P201A
P201B
P202A
P202B
P203
P204
P207
P208
P207A
P208A
P911
P308A
E899
X201 8MHZ
MD RST FROM CR MICON
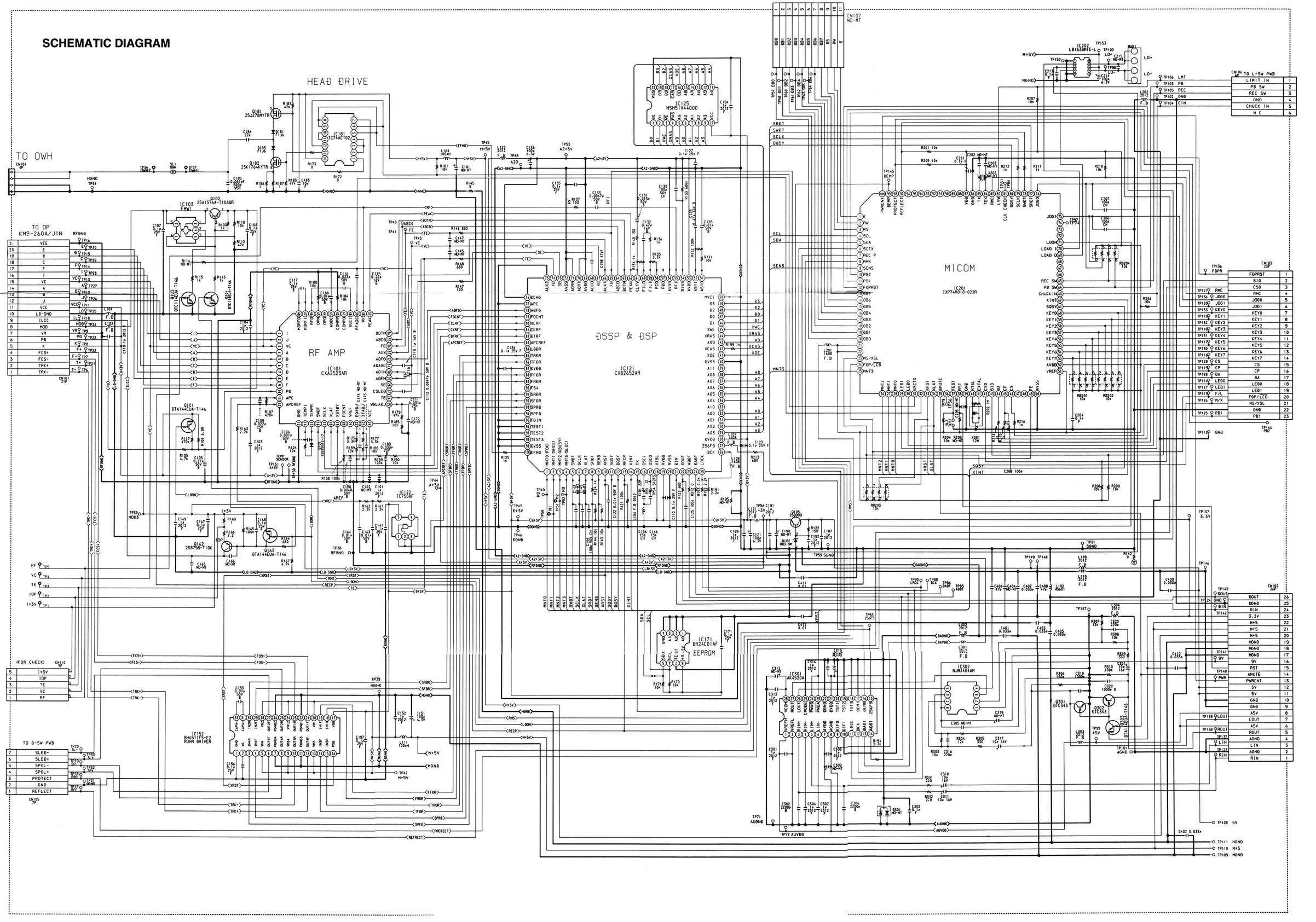
SCHEMATIC DIAGRAM