Ref. No. 3424

ONKYO® SERVICE MANUAL

PCS-D1

CASSETTE/CD PLAYER

TU-D1

Black and Silver models

UDN, UDC, UD	120V AC, 60Hz
UP	230V AC, 50Hz
UW	120/220V AC, 50/60Hz
UQA	240V AC, 50Hz

SAFETY-RELATED COMPONENT WARNING!!
COMPONENTS IDENTIFIED BY MARK ⚠ ON THE SCHEMATIC DIAGRAM AND IN THE PARTS LIST ARE CRITICAL FOR RISK OF FIRE AND ELECTRIC SHOCK. REPLACE THESE COMPONENTS WITH ONKYO PARTS WHOSE PARTS NUMBERS APPEAR AS SHOWN IN THIS MANUAL.
MAKE LEAKAGE-CURRENT OR RESISTANCE MEASUREMENTS TO DETERMINE THAT EXPOSED PARTS ARE ACCEPTABLY INSULATED FROM THE SUPPLY CIRCUIT BEFORE RETURNING THE APPLIANCE TO THE CUSTOMER.

SPECIFICATIONS

CD Player Section

Signal readout system:	Optional non-contact
Reading rotation:	About 500 ~ 200 r.p.m. (constant linear velocity)
Linear velocity:	1.2 ~ 1.4 m/s
Error correction system:	Cross Interleave Reed-Solomon code
D/A converter:	1 BIT D/A Converter
Sampling frequency:	176.4kHz (4 times oversampling)
Number of channels:	2 (stereo)
Frequency response:	20 Hz ~ 20 kHz
Total harmonic distortion:	0.03% (at 1 kHz)
Dynamic range:	75dB
Signal to noise ratio:	90dB
Channel separation:	70dB (at 1 kHz)
Wow and Flutter:	Below threshold of measurability

Cassette Player Section

Track System:	4-tracks, 2-channels
Erasing System:	AC erase
Tape Speed:	4.8 cm/sec. (1-7/8 i.p.s.)
Wow and Flutter:	0.07% (WRMS) 0.15%W PEAK
Frequency Response:	20 ~ 15,000Hz (Normal) (30 ~ 14,000Hz ±3dB) 20 ~ 16,000Hz (High) (30 ~ 15,000Hz ±3dB) 20 ~ 17,000Hz (Metal) (30 ~ 16,000Hz ±3dB)
S/N Ratio:	Dolby NR off: 58dB (metal position tape) A noise reduction of 10dB above 5kHz and 5dB at 1kHz is possible with Dolby B NR. A noise reduction of 20dB at 5kHz is possible with Dolby C NR.

ONKYO
AUDIO COMPONENTS

Input Jacks:	AUX IN: 2
	Input sensitivity: 280/500mV
	Input impedance: 50 kohms
Outputs:	Monitor Jack: 1
	Optimum load impedance: 8-200Ohms
Motors:	DC servo motor × 1; DC motor × 1
Heads:	REC/PB: 1
	ERASE: 1

Power Supply Rating: (AC Adaptor)

European models:	AC 230V, 50Hz
	3 pin Attachment plug
U.S.A. and Canadian models:	AC 120V, 60Hz
	3 pin Attachment plug
U.K. and Australian models:	AC 240V, 50Hz
	3 pin Attachment plug
Worldwide models:	AC 120V ~ 220V variable, 50/60Hz 3 pin Attachment plug

Battery Pack (BT-D1)...Option

Used Battery	Small sealed lead battery	
Normal voltage	6V DC	Requires 2 battery packs
Nominal capacity	1800 mA	
Dimensions:	295 (W) × 80 (H) × 256 (D) mm (11-5/8″ × 3-1/8″ × 10-1/8″)	
Weight:	2.6kg. (5.7lbs.)	

Design and specifications are subject to change without prior notice.

SERVICE GUIDE

RESET AND POWER CIRCUIT

By connecting AC Adapter, Q917OUT is to set at 5V resetting Main Microcomputer Q804 and Key Microcomputer Q806 by Q918.
Q804 ″44 is to set at "H" and then reset Servo Microcomputer Q801 by Q919 ″8 that is to set for Q919 ″2 "H".
Next, when input through KEY of the Operation Buttons, Q804″44″58 is to be set at "H", turning ON Q908, Q909, Q910, Q911, and Q912 respectively; then, supply +B into the mechanism and the circuit. The power supply of the Transmitter Section detects wired connection or not for the system by means of Microcomputer Q804 setting Q804″56 at "H", in case of un-wired, while Q701″ 2E turns in "H" and outputs 5V toward Q701″3V0.
While charging battery, its voltage increases up to around 14.6V, however, when completed charging, it decreases down to 13.6 Y or so.

BATTERY CHARGING CIRCUIT

The changing current is to be applied to the battery by way of R903 and Q903 from AC Adapter. While charging, the current is detected by R909 and the base voltage of R905 is controlled (Charge Indicator is turned ON by the live Q905 while charging). At the end of charging, due to the R909 not charged, base voltage of Q905 increases to turn OFF Q905 and then Charge Indicator.

OVERDISCHARGE PREVENTION OF BATTERY

Microcomputer Q804″63 detects the poor capacity of the battery when its voltage falls down to approx. 10.6V turning Warning Light ON on the other hand. In case of lowere voltage, Microcomputer Q804″44 and ″58 turn in "L" to start Q912 and Q919 to prevent +B from passing.
Although you take out AC Adapter with battery connection under POWER OFF, the back-up current (abt. 8 mA) to Microcomputer is still alive, and the battery is to be exhaussted (completely in a week or so).

CABINET DISASSEMBLY

1. Turn over the set.
2. Loosen out setscrews of the battery cover and then take the cover off.
3. Loosen out the 6 (siz) screws fixing Cabinet (TOP) and Cabinet (BASE).
4. Turn down the set.
5. Set up ANT and take off the cabinet (TOP).

BT-D1 (BATTERY)

1. CHARGING

Put two batteries into the Control Center (TU-D1) to connect to AC Adapter and then plug in for power supply to start charging (the Charge Indicator of Control Center will be turned ON). When completed charging, the said Light is to goes out. (Charging takes about four hours. Play back for two hours, while recording is not available)

NOTE: Charging for SU-X1 requires series arrangement of two batteries and therefore, if not discharge equally, (to be normal generally, when used for TU-D1, and so, when just one of the two batteries was used separately) the used one may not be charged. In such a case, charge one by one at the rated voltage of supply DC 7 V 800 mA.

After stored for a long time (12 months or more) or overcharged, it will be difficult to charge. This is because of the sulfate film caused on the electrode. In this case, charge for 12 to 24 hours and more to remove the sulfate film in order to be as new as a virgin battery.

2. DISPLAY

At shop, for first-in-first-out method, the display consists of 10-digit Serial NO., the four inferior of which are to show the Date of Manufacture:

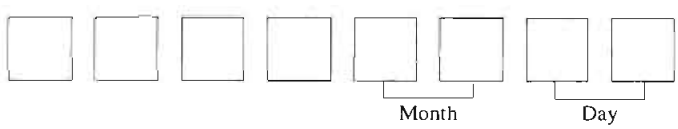

therefore, there can be some NO's with the same inferior four digits. Number of products and cartons (containing two products) is also displayed on the color label to be stuck to a larger package every six months.

November	91 to April	92	: Color label not stuck
May	92 to October	92	: Red label stuck
November	92 to April	93	: Yellow label to be stuck
May	93 to October	93	: Blue lable to be stuck
November	93 to April	94	: Orange label to be stuck
May	94 to October	94	: Green label to be stuck

3. LIFE OF CYCLE

Varies based on the discharge ondition.
The more discharged, the less in cycle numbers.
100% discharge – 200 times of charge/discharge
50% discharge – 400 times of charge/discharge
30% discharge – 1200 times of charge/discharge

PROTECTION OF EYES FROM LASER BEAM DURING SERVICING

This set employs a laser. Therefore, be sure to follow carefully the instructions below when servicing.

WARNING!!

WHEN SERVICING, DO NOT APPROACH THE LASER EXIT WITH THE EYE TOO CLOSELY. IN CASE IT IS NECESSARY TO CONFIRM LASER BEAM EMMISION, BE SURE TO OBSERVE FROM A DISTANCE OF MORE THAN 30cm FROM THE SURFACE OF THE OBJECTIVE LENS ON THE OPTICAL PICK-UP BLOCK.

Laser Diode Properties

- Material: GaAS/GaAlAs
- Wavelength: 780nm
- Emission Duration: continuous
- Laser output: max. 0.5mW*
  - *This output is the value measured at a distance about 1.8mm from the objective lens surface on the Optical Pick-up Block.

LASER WARNING LABEL

The label shown below are affixed.

1. **Warning labels**
   These labels are located on the back of the cabinet or the lid of the battery case.

Ⓐ

DANGER —INVISIBLE LASER RADIATION WHEN OPEN AND INTERLOCK FAILED OR DEFEATED. AVOID DIRECT EXPOSURE TO BEAM

CAUTION —HAZARDOUS LASER AND ELECTROMAGNETIC RADIATION WHEN OPEN AND INTERLOCK DEFEATED

ATTENTION —RAYONNEMENT LASER ET ELECTROMAGNETIQUE DANGEREUX SI OUVERT AVEC L'ECLENCHEMENT DE SECURITE ANNULE.

Ⓑ

ADVARSEL: USYNLIG LASERSTRÅLING VED ÅBNING, NÅR SIKKERHEDSAF-BRYDER ER UDE AF FUNKTION. UNDGÅ UDSÆTTELSE FOR STRÅLING.

Ⓒ

VARO!
AVATTAESSA JA SUOJALUKITUS OHITETTAESSA OLET ALTTIINA NÄKYMÄTTÖMÄLLE LASERSÄTEILYLLE. ÄLÄ KATSO SÄTEESEEN.

Ⓓ

VARNING
OSYNLIG LASERSTRÅLNING NÄR DENNA DEL ÄR ÖPPNAD OCH SPÄRREN ÄR URKOPPLAD. BETRAKTA EJ STRÅLEN.

ⒷⒸⒹ 230V model only (Except Germany model)

2. **Certification label (120V model)**
   This label is located on the back panel.

THIS DEVICE COMPLIES WITH PART 15 OF THE FCC RULES. OPERATION IS SUBJECT TO THE FOLLOWING TWO CONDITIONS: (1) THIS DEVICE MAY NOT CAUSE HARMFUL INTERFERENCE, AND (2) THIS DEVICE MUST ACCEPT ANY INTERFERENCE RECEIVED, INCLUDING INTERFERENCE THAT MAY CAUSE UNDESIRED OPERATION.

COMPLIES WITH FDA RADIATION PERFORMANCE STANDARDS, 21 CFR SUBCHAPTER J

MANUFACTURED:

SN-29361450

3. **Class 1 label (Except 120V model)**
   This label is located on the back panel.

"CLASS 1 LASER PRODUCT"

LUOKAN 1 LASERLAITE

KLASS 1 LASER APPARAT

ADVARSEL

Denna maekning er anbragt på apparatets højre side og indikerer, at apparatet arbejder med laserstråler af klasse 1, hvilket betyder, at der anvendes laserstråler af svageste klasse, og at man ikke på apparatets yderside kan blive udsat for utilladelig kraftig stråling.

APPARATET BØ/R KUN ÅBNES AF FAGFOLK MED SÈ RLIGT KENDSKAB TIL APPARATER MED LASERSTRÅLER!

Indvendigt i apparatet er anbragt den her gengivne advarselsmérkning, som advarer imod at foretage sådnne indgreb i apparatet, at man kan komme til at udsaette sig for laserstråling.

VAROITUS! LAITTEEN KÄYTTÄMINEN MUULLA KUIN TÄSSÄ KÄYTTÖOHJEESSA MAINTULLA TAVALLA SAATTAA ALTISTAA KÄYTTÄJÄN TURVALLISUUSLUOKAN 1 YLITTÄVÄLLE NÄKYMÄTTÖMÄLLE LASERSÄTEILYLLE.

BLOCK DIAGRAM

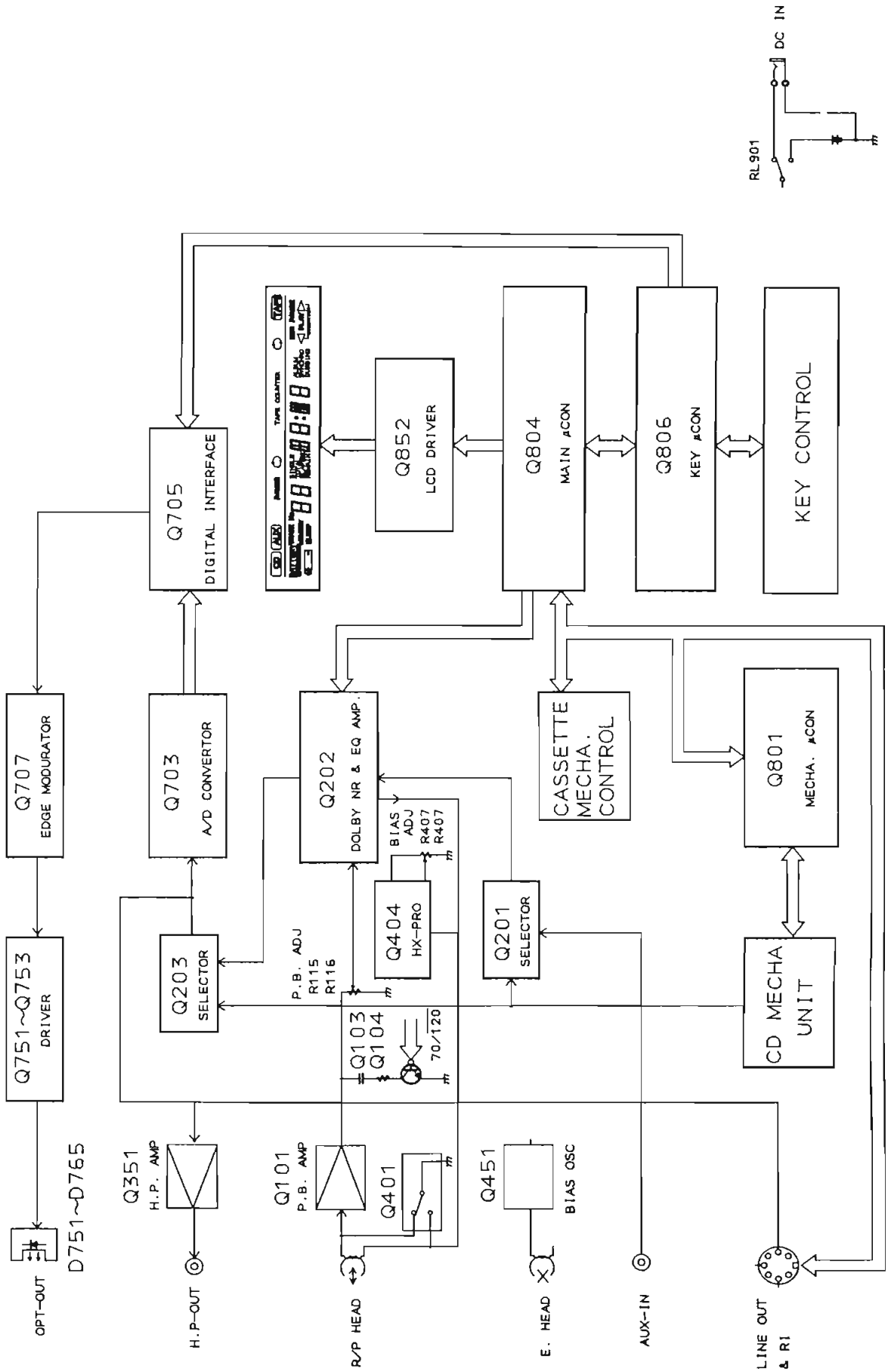

IC BLOCK DIAGRAM

TC4052BF (ANALOG SW)

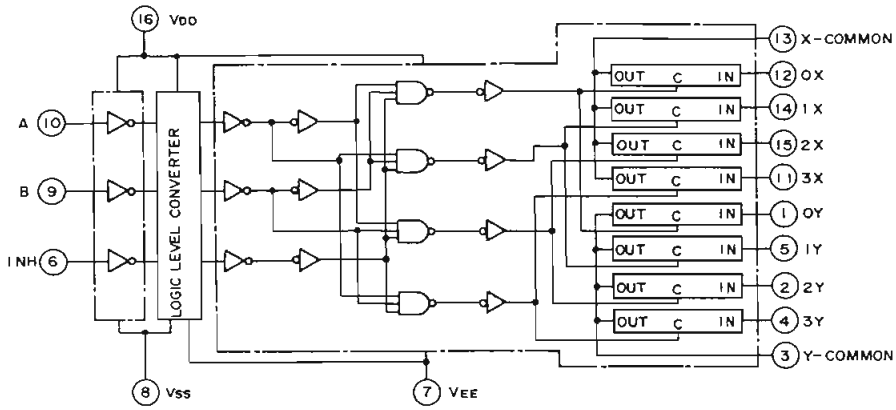

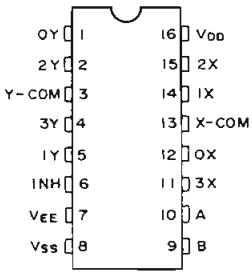

CONTROL INPUT			"ON" CHANNEL
INH	B	A	
L	L	L	0 X, 0 Y
L	L	H	1 X, 1 Y
L	H	L	2 X, 2 Y
L	H	H	3 X, 3 Y

HA12155NT (DOLBY-NR)

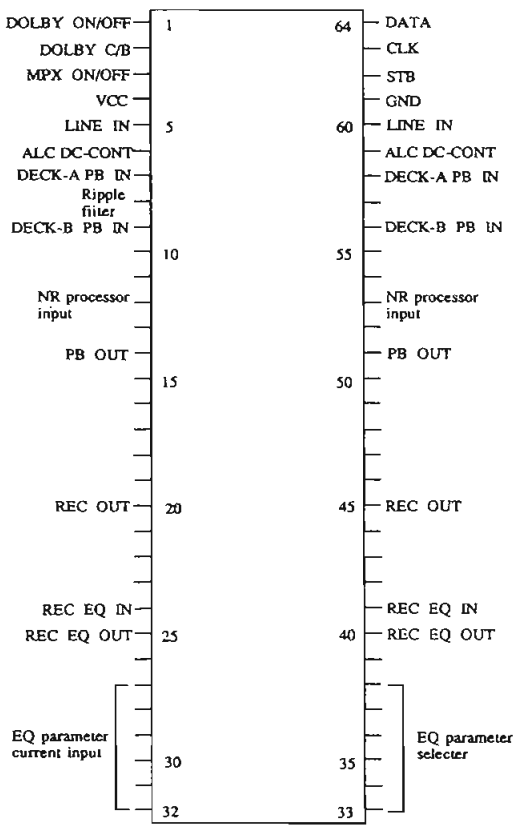

TA78DL05S (5V POWER SUPPLY)

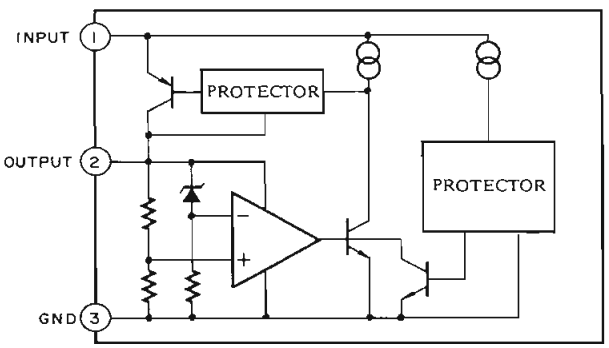

TC74HC74AP

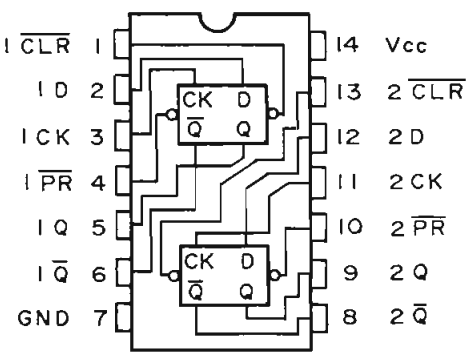

(TOP VIEW)

MICRO COMPUTER TERMINAL DESCRIPTION

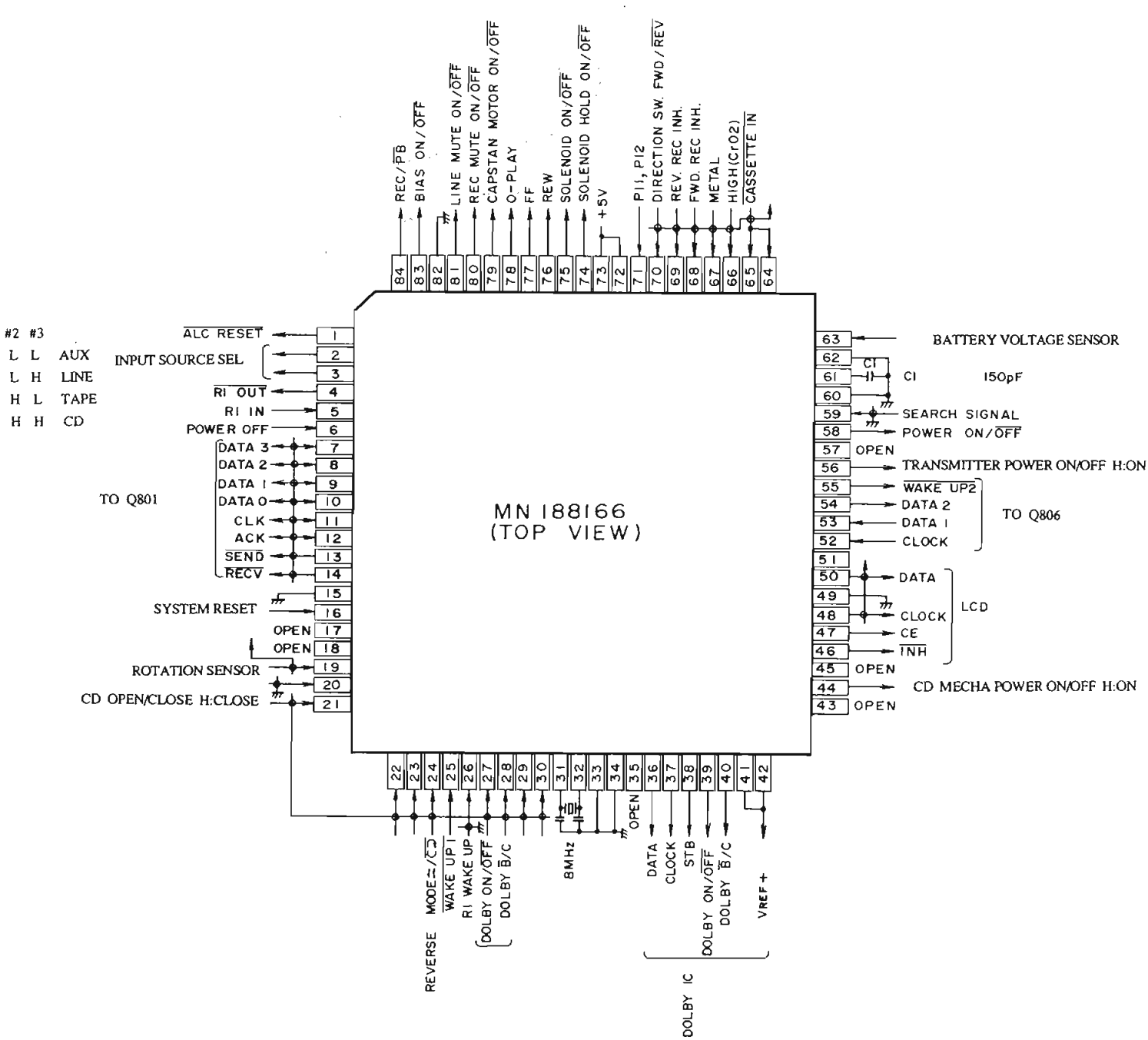

PRINTED CIRCUIT BOARD-PARTS LIST

NAAR-4422-2

CIRCUIT NO.	PART NO.	DESCRIPTION
	Ics	
Q101	222905	µPC1228HA
Q151	222940	BA335H
Q201	222840521R1TO	TC4052BF
Q202	22240544	HA12155NT
Q203	222840521R1TO	TC4052BF
Q209	22240581R2	NJM4565M
Q351	22240581R2	NJM4565M
Q404	222959	µPC1297CA
Q503	22240239	TA-7291S
Q504	222780053	78L05
Q801	22240576R3	MN1554PKL1
Q804	22240578AR3	MN188166ONA-1
Q806	22240577BR9	MN1584170ONB-2
Q902	22240581R2	NJM4565M
Q917	222780057TOS	TA78DL05S
Q918	22240018	M51943ASL
Q919	22240534	LA5601
	Transistors	
Q103, Q104	2214580R2 or	UN2212 or
	2214480R2	RN1403
Q181-Q183	2213145R2 or	2CS2712GR or
	2214434R2	2SD601AR
Q184	2214480R2 or	RN1403 or
	2214580R2	UN2212
Q205, Q206	2213145R2 or	2CS2712GR or
	2214434R2	2SD601AR
Q207, 208	2214580R2	UN2212
Q301,Q302	2211705 or	2SD655-E or
	2211706	2SD655-F
Q303, Q304	2214540R2 or	RN2403 or
	2214590R2	UN2112
Q305	2214480R2 or	RN1403 or
	2214580R2	UN2212
Q401, Q402	2214480R2 or	RN1403 or
	2214580R2	UN2212
Q403	2214384R2	2SA1182Y
	2214424R2 or	2SB710AR or
	2214425R2	2SB710AS
Q405, Q406	2214480R2 or	RN1403 or
	2214580R2	UN2212
Q409, Q410	2214480R2 or	RN1403 or
	2214580R2	UN2212
Q451	2214394R2 or	2SC2859Y or
	2214444R2	2SD602AR
Q501	2214402R2	2SC3326B
	2214456R2 or	2SD1328T or
	2214455R2	2SD1328S
Q502	2214480R2 or	RN1403 or
	2214580R2	UN2212
Q505, Q506	2213145R2 or	2CS2712GR or
	2214434R2	2SD601AR
Q507, Q508	2214402R2	2SC3326B
	2214456R2 or	2SD1328T or
	2214455R2	2SD1328S
Q803	2214540R2 or	RN2403 or
	2214590R2	UN2112
Q901	2201394	2SB1015-Y
Q903	2201394	2SB1015-Y
Q904, Q905	2214375R2 or	2SA1162GR or
	2214414R2	2SB709AR
Q907	2213145R2 or	2CS2712GR or
	2214434R2	2SD601AR
Q908-Q911	2214384R2	2SA1182Y
	2214424R2 or	2SB710AR or
	2214425R2	2SB710AS
Q912-Q914	2214540R2 or	RN2403 or
	2214590R2	UN2112
Q915	2202115 or	2SD2061-E or
	2202116	2SD2061-F
Q916	2214480R2 or	RN1403 or
	2214580R2	UN2212
	Diodes	
D201, D202	223205	1SS270A
D203	224450512	MTZ5.1B
Q401	223205	1SS270A
D501	224450433	MTZ4.3C
D502	224450752	MTZ7.5C
D801	223205	1SS270A
D802	224450562	MTZ5.6B
D803	225255B	SEL3110SB
	225255C or	SEL3110SC or
	225255D	SEL3110SD
D804	223205	1SS270A
D805	224450562	MTZ5.6B
D806, D807	223205	1SS270A
D901-D904	223210R2	U1BC44
D905	224450512	MTZ5.1B
D906	223205	1SS270A
D907	224450512	MTZ5.1B
D908, D909	223209R2	1SS349
D910	224450512	MTZ5.1B
D911, D912	223205	1SS270A
D913-D916	223210R2	U1BC44
D917-D919	223205	1SS270A
D920	224450823	MTZ8.2C
D921	223205	1SS270A
	Coils	
L201, L202	233407	NMC-6079
L401, L402	231165	NTR-6506
L403, L404	231127	NCH-4183
L451	231210	NLO-2055
X801	3010154	CST8.00MGW
X802	3010150	CST4.00MGW
	Relay	
RL101, RL102	25065282	NRL-2P1.25A-DC12-39
	Capacitors	
C103, C104	391980227	2.2 µF50V
C107, C108	391921017	100 µF6.3V
C113, C114	391980227	2.2 µF50V
C120	391944707	47µF16V
C153	391980107	1 µF50V
C154, C155	391984797	0.47µF50V
C156	391941007	10µF16V
C183	391921017	100 µF6.3V
C201-C204	391981097	0.1 µF50V
C205, C206	391984797	0.47µF50V
C211, C212	391980107	1 µF50V
C223, C224	391941007	10µF16V
C225-C228	391980107	1 µF50V
C230	391944707	47µF16V
C231	391980107	1 µF50V
C232	391944707	47µF16V
C233, C234	391980107	1 µF50V
C301, C302	391944707	47µF16V
C351, C352	391984797	0.47µF50V
C353-C357	391941007	10µF16V

CIRCUIT NO.	PART NO.	DESCRIPTION
C403, C404	391980477	4.7 µF50V
C417	391980107	1 µF50V
C418, C419	391941007	10µF16V
C421	391924717	470 µF16.3V
C455	391941007	10µF16V
C502	391941007	10µF16V
C901	391941017	100 µF16V
C903	391941007	10µF16V
C905	391980477	4.7 µF50V
C905	391941007	10µF16V
C907	391944717	470 µF16V
C908	391980227	2.2 µF50V
C911, C912	391941007	10µF16V
	Resistors	
R115, R116	5210218	N06HR20KBD
R229, R230	5210218	N06HR20KBD
R407, R408	5210217	N06HR10KBD
R453	442522204F	RS1/2WBJ 22 Ω
R503	442524704F	RS1/2WBJ 47 Ω
R513	442623904F	RS1WBJ 39 Ω
R833	49163472406	RM1/101J4.7k × 6
R909	442528294F	RS1/2WBJ 0.82 Ω
R925	5210217	N06HR10KBD
R943	442521204F	RS1/2WBJ 12 Ω
	Plug, socket	
P101	25050730	NSCT-8P534
P102	25055136	NPLG-6P120
P201	25045360	NPJ-2PDWH206
P202	25065414	NSS-22155
P251A	2000665	NSAS-8P621
P301	25050525	NSCT-3P348
P401	25055132	NPLG-2P116
P302A	2009990251	NSAS-3P0364
P701	2009990257	NSAS-20P0373
P303	25050525	NSCT-3P348
P801A	25050732	NSCT-23P536
P802	25050525	NSCT-3P348
P803A	25050731	NSCT-15P535
P804	25055146	NPLG-2P130
P805	25055146	NPLG-2P130
P851	2006323015	NSAS-30P0358
P852A	25055150	NPLG-6P134
P901	25050729	NSCT-3P533
	Miscellaneous	
	25050065	YSH403T, FESE HOLDER
	27160179	RAD-57, RADIATOR
	27160145	RAD-51, RADIATOR
	82143006	3P+6FNBC, SCREW

NADG-4423-2

CIRCUIT NO.	PART NO.	DESCRIPTION
	Ics	
Q701	22240534	LA5601
Q702	22240608R1	NJM2100M
Q703	22240579R2	CS5349KS
Q704	222740045R1TO	TC74HCU04AF
Q705	22240580R2	YM3437C-F
Q706	222740745R1TO	TC74HC74AF
Q707	222740865R1TO	TC74HC86AF
	Transistors	
Q708	2214363 or 2214363	2SC4455R or 2SC4455Q
	Diode	
D705	223205	1SS270A
	Coil	
L701	230913R2	BLM31A02PT
	Ceramic OSC	
X701	3010193	CST11.2MTW040
	Capacitors	
C705-C710	391980477	4.7 µF50V
C716	391944707	47µF16V
C718	391982297	0.22µF50V
C719	391980477	4.7 µF50V
C720, C721	391944707	47µF16V
C722	391981097	0.1 µF50V
C724	391980477	4.7 µF50V
C727	391941007	10µF16V
C729	391980477	4.7 µF50V
C733	391941007	10µF16V
C734	391981097	0.1 µF50V
C738	391941007	10µF16V
C750	352982296S	0.22µF50V
	Plug	
P701	25055154	NPLG-10P138
P702	25055147	NPLG-3P131

NAAF-4424-2

CIRCUIT NO.	PART NO.	DESCRIPTION
	Resistor	
R351, R352	5104302	N08RGL5KA01Z, VARIABLE
	Jack	
P351	25045310	LGS6517-0206

NASW-4425-2

CIRCUIT NO.	PART NO.	DESCRIPTION
S802	25065297	NSS-23119,SWITCH
S803	25065364	NSS-12138,SWITCH
P251	25055226	NPLG-4P210,PLUG

NASW-4426-2

CIRCUIT NO.	PART NO.	DESCRIPTION
S801	25035640	NPS-111-S594, SWITCH

NAPS-4427-2

CIRCUIT NO.	PART NO.	DESCRIPTION
P950A	25055133	NPLG-3P117, PLUG

NAPS-4428-2

CIRCUIT NO.	PART NO.	DESCRIPTION
P951A	25055133	NPLG-3P117, PLUG

NADIS-4429-2

CIRCUIT NO.	PART NO.	DESCRIPTION
	Ics	
Q852	22240675R3	LC7582E
	LCD	
Q851	24190032	LCD8207PR
	LED	
D451	225141	SEL2213C
	Switch	
S851-S880	25035639R2	NPS-111-S593
	Plug, socket	
P851	25055159	NPLG-15P143

CIRCUIT NO.	PART NO.	DESCRIPTION
P852	2006321215	NSAS-12P0359

NAETC-4430-2

CIRCUIT NO.	PART NO.	DESCRIPTION
	Transistor	
Q751-Q753	2214364 or 2214363	2SC455R or 2SC455Q
	LED	
D751-D765	225277	SID1H10CXM
	Capasitor	
C751	354742219S	220 µF16V
	Holder	
	27190878	HOLDER (LED)

NAAF-4537-2

CIRCUIT NO.	PART NO.	DESCRIPTION
R351, R352	5104302	N08RGL5KA. VARIABLE
P351	25045310	LGS6517-0206

NAETC-4562-2

CIRCUIT NO.	PART NO.	DESCRIPTION
	Transistor	
Q721, Q722	2211705 or 2211706	2SD655E or 2SD655F
Q723, Q724	2212600 or 2213580	DTA124ES or RN2203
	Capasitor	
C322	391980477	4.7 µF50V
	Plug	
P302	25055367	NPLG-3P350

ADJUSTMENT PROCEDURES (CASSETTE DECK)

PRECAUTIONS

1. Before adjustment, clean the following parts with an alchol moinstend swab.
   * record/playback head
   * erase head
   * pinch roller
   * capstan
2. Do not use magnetized screwdriver for adjustments.
3. Demagnetize record/playback head with a head demagnetizer.

TEST EQUIPMENT/TOOLS REQUIRED:

Audio oscillator
Digital frequency counter
Oscilloscope
Attenuator
AC voltmeter
Non-magnetic screw driver
Test tapes
TCC-153 : 10 KHz, – 5dB
MTT-111 : 3 kHz, – 0dB
MTT-150 : Dolby level calibration 400Hz, tone 200nWb/m

Item		Connection of instrument	Line input	Test tape	Mode	Output indicator	Adjustment point	Adjust	Remaks
1	Tape speed	Frequency counter to LINE output terminal		MTT-111	PB	Frequency counter	Semi-fixed on the motor	3,000 to 3,010Hz	
2	Head azimuth	AC voltmeter and oscilloscope to LINE output terminal		TCC-153	PB	AC voltmeter	Haed azimuth screw FWD ··· left REV ··· right	Maximum and same phase at channels L and R	See fig.1
3	Play-back level	AC voltmeter to terminals TP-1 and TP-2		MTT-150	PB	AC voltmeter	R-115 (Ch. L) R-116 (Ch. R)	300mV	
4	Bias current	Fig. 2	1KHz, –20dB and 12kHz, –20dB	UD-1 C-90	REC/PB	AC voltmeter	R-407 (Ch. L) R-408 (Ch. R)	Same level at REC/PB	
5	Record level	Fig. 2	2	1 KHz		REC PAUSE	AC voltmeter	Attenutor or AF OSC output	P101 LINEOUT 160mV
					REC/PB	AC voltmeter	R-229 (Ch. L) R-230 (Ch. R)	Same level at REC/PB	
6	Battery charg voltage	Fig.3				DC voltmeter	R-925	13.65V ± 0.05V	

Blank tape
NORMAL ..... NEW UD-1 C-90
HIGH .....XL-II C-90
METAL .....XS C-60
FF.REW torque ..... 90~180g/cm
PLAY torque ..... 30~70g/cm
Back tention ..... 2~6g/cm

ADJUSTMENT POINT

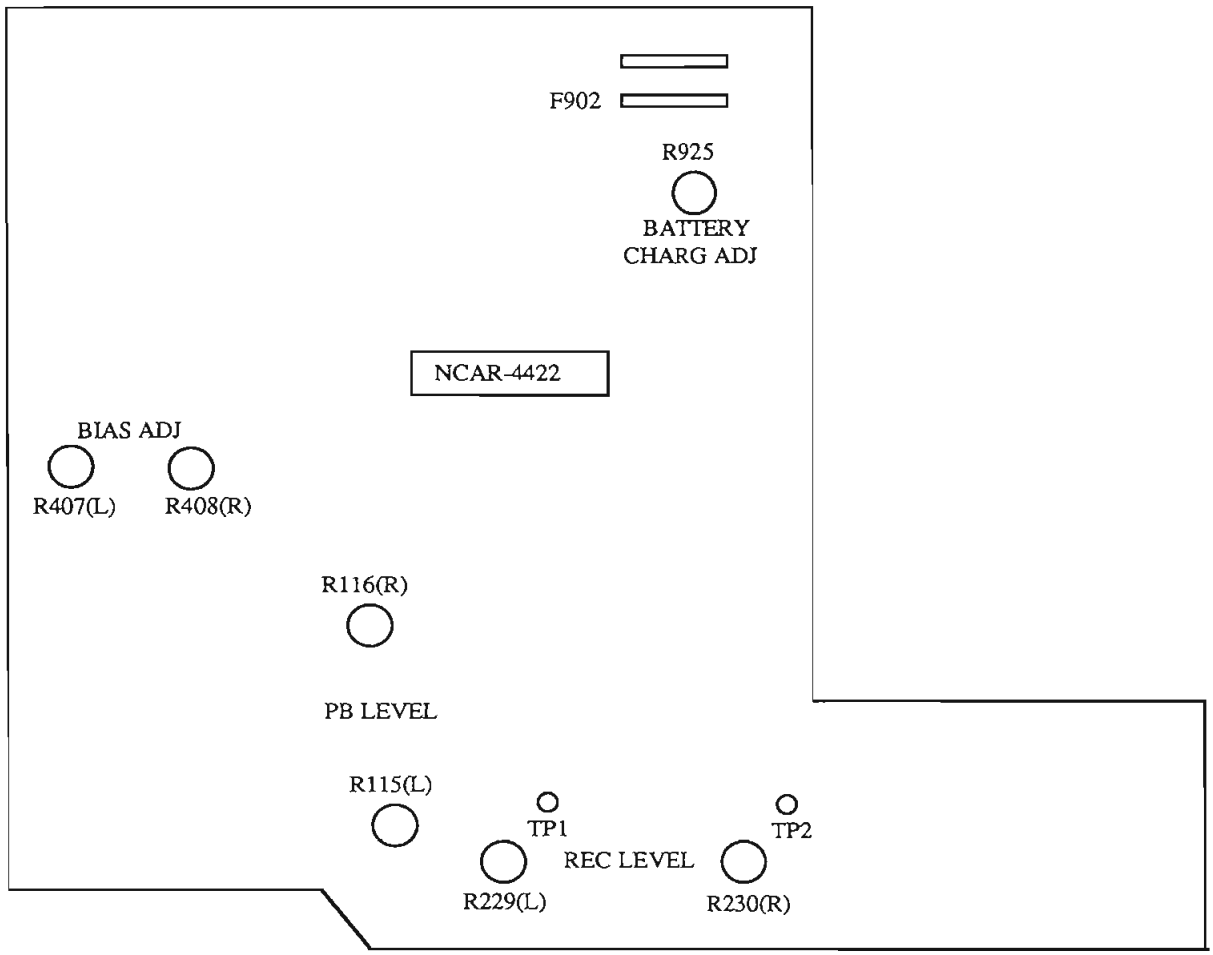

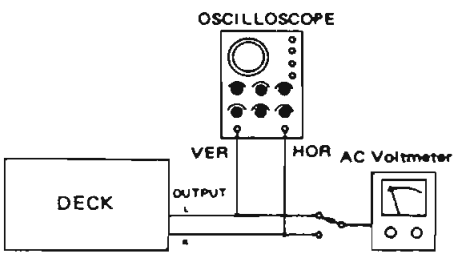

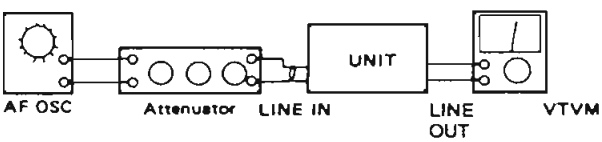

fig-2

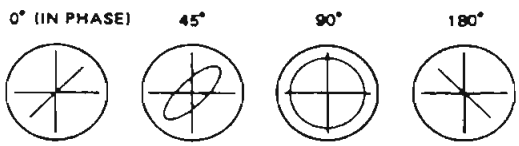

Confirming phase relationship

fig-1

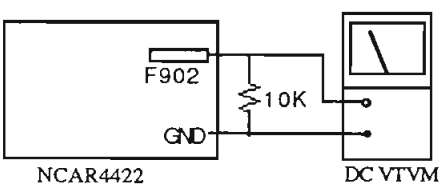

fig-3

CHASSIS-EXPLODED VIEW PART LIST

REF. NO.	PARTS NO.	DESCRIPTION	
A101	28110620	CABINET AS (TOP)	[B]
A101	28110621	CABINET AS (TOP)	[S]
A103	27190870	HOLDER (HL)	
A104	27190871	HOLDER (HR)	
A111	28141191	CUSHION	
A112	27141513	BRACKET (R)	
A114	27180516	SPRING (B)	
A113	27180497C	SPRING (F)	
A115	833426060	TAP-TIGHT SCREW 2.6TTP+6P	
A117	28141190	CUSHION	
A118	28141189	CUSHION	
A119	27130681B	BRACKET (F)	
A121	1H203701K	FRONT PANEL	[B]
A121	1H204701K	FRONT PANEL	[S]
A125	28335036	LEVER (OP)	
A126	27141512A	BRACKET (S)	
A127	27180498	SPRING (OP)	
A128	28324539B	KNOB (OP)	[B]
A128	28324540A	KNOB (OP)	[S]
A131	833430080	TAP-TIGHT SCREW 3TTP+8PBC	
A132	834426068	TAP-TIGHT SCREW 2.6TTS+6B	
A140	28141179	CUSHION	
A141	28194353	COSMETIC BAR (B)	
A142	28141162	CUSHION	
A144	27301592	LID (AL)	[B]
A144	27301593	LID (AL)	[S]
A145	28400758	LID (BASE)	[B]
A145	28400769	LID (BASE)	[S]
A146	28194351	COSMETIC BAR	[B]
A146	28194352	COSMETIC BAR	[S]
A148	27260310A	SHAFT (L)	
A149	27260311B	SHAFT (R)	
A151	838426088	TAP-TIGHT SCREW 2.6TTB+8B	
A152	27141557	BRACKET (F)	
A153	28141161	CUSHION 22×4.5×0.15	
A154	871430	SPRING WASHER SW-3 BC	
A201	834430088	TAP-TIGHT SCREW 3TTS+8BBC	
A204	28324555A	KNOB (LEV)	[B]
A204	28324556B	KNOB (LEV)	[S]
A205	28191621	CLEAR PLATE	
A206	27270354	SPACER (LEV)	
A207	27270353	SPACER (SW)	
A300	28110615	CABINET (BASE)	[B]
A300	28110626	CABINET (BASE)	[S]
A301	27150329A	SHIELD PLATE	
A303	27150336	SHIELD PLATE	
A308	28184501B	COVER (BATTERY)	
A309	28141155	CUSHION	
A310	27141523	BRACKET (BAT)	
A311	83230082	TAPPING SCREW 3STB+-8BQNI	
A312	27270345	SPACER 8×2T	
A313	28324557	KNOB (DOL)	[B]
A313	28324558A	KNOB (DOL)	[S]
A314	28141200	CUSHION	
A315	82941404	SPECIAL SCREW 1.4N+4FNBC	
A316	831430120	TAP-TIGHT SCREW 3TTW+12PB	
A401	28184503	COVER (D)	[B]
A401	28184504	COVER (D)	[S]
A402	28184505	COVER (U)	
A403	28184506	COVER (B)	[B]
A403	28184507	COVER (B)	[S]
A404	28184508	COVER (F)	

REF. NO.	PARTS NO.	DESCRIPTION	
A405	27273147	JOINT (L)	
A406	27273148A	JOINT (T)	[B]
A406	27273150A	JOINT (T)	[S]
A407	28330091	CAP	[B]
A407	28330092	CAP	[S]
A408	27190877A	HOLDER (BASE)	
A410	27225109	SHIELD CASE (D)	
A411	27225110	SHIELD CASE (U)	
A415	27180401	SPRING	
A416	270555	STEEL BALL	
A419	863430	NUT N-3N BC	
A420	800137	NUT M3 × 6 × 1T	
A421	833420068	TAP-TIGHT SCREW 2TTP+6BBC	
A423	831430100	TAP-TIGHT SCREW 3TTW+10PB	
A425	870157	WAVE WASHER WW-6 BC	
A426	870150	WAVE WASHER WW-14	
A427	82113014	PAN-HEAD SCREW 3P+14FN	
A429	87643010	WASHER W3 × 10FBC	
A501	24824001	CLAMPER	
A502	24826003	HOLDER	
A503	24832002	MAGNET	
A504	24826004	DISK HOLDER	
A504	24836001	RUBBER	
P701	2041231520A	FLAT CABLE NCFC1-231520	
P702A	2009990201	NSAS-3P0289	
U1	1H203522-2	NAAR-4422-2	
U2	1H203523-2	NADG-4423-2	
U4	1H203525-2	NASW-4425-2	
U5	1H203526-2	NASW-4426-2	
U6	1H203527-2	NAPS-4427-2	
U7	1H203528-2	NAPS-4428-2	
U8	1H203529-2	NADIS-4429-2	
U9	1H203530-2	NAETC-4430-2	
U10	1H203537-2	NAAF-4537-2	
U12	1H203562-2	NAETC-4562-2	
Z1	24800002	C.D. MECHANISM AS	
Z2	244164A	CASSETTE MECHANISM AS	
Z3	24611517	BRACKET	
	FUSE		
F901	⚠ 252145	1A-TSC	[D]
	⚠ 252070	1A-SE-EAK	[P/W]
F902	⚠ 252149	2.5A-TSC	[D]
	⚠ 252075	2.5A-SE-EAK	[P/W]
	AC CORD,		
	⚠ 253177HIT	P34-SPT-2-C0024	[D]
	⚠ 253183HAN	EC-851-E09	[P/W]
	⚠ 253184HAN	SC-323-J04	[Q]
	⚠ 253179HIT	PISEV-H05VV-F-C-6061	[SW]
	AC ADAPTOR,		
	⚠ 24505339	SXA-3016UD	[D]
	⚠ 24505344A	SXA-3016UP	[P/Q]
	⚠ 24505340	SXA-3016UW	[W]

Labels

29361450 lavel (FCC)
29361451 lavel (LASER)
29360687 lavel (CLASSI)
29361449 lavel (TU)

NOTE
[B]: Black model
[S]: Silver model
[D : Only 120v model
[P]: Only 230v model
[Q]: Only 240v model
[W]: Worldwide model
[SW] : Switzerland model

NOTE:
THE COMPONENTS IDENTIFIED BY MARK ⚠ ARE CRITICAL FOR RISK OF FIRE AND ELECTRIC SHOCK. REPLACE ONLY WITH PART NUMBER SPECIFIED.

CHASSIS-EXPLODED VIEW

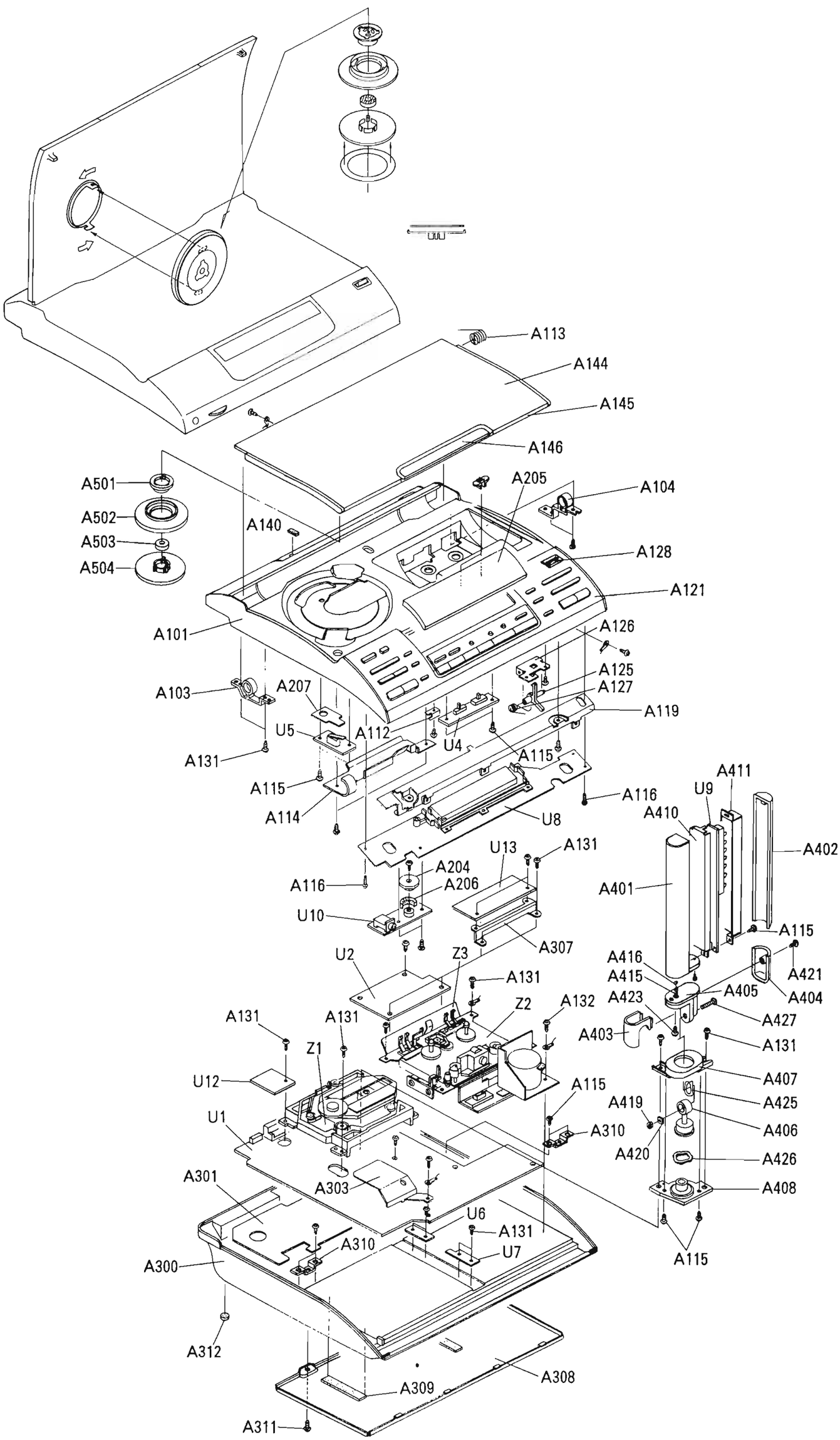

CD MECHANISM-EXPLODED VIEW

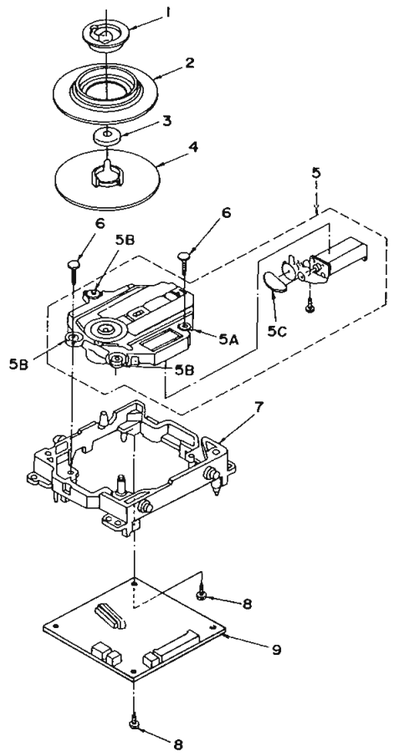

REF. NO.	PARTS NO.	DESCRIPTION
1	24824001	clamper
2	24826003	holder
3	24832002	magnet
4	24826005	disc holder
5	24800003	traverse AS
5a	24818002	floating cushion (A)
5b	24818003	floating cushion (B)
5c	24816002	belt
6	24840006	pin
7	24802002	chassis
8	801499	screw
9	24505342	printed circuit board AS

TAPE MECHANISM CONNECTION DIAGRAM

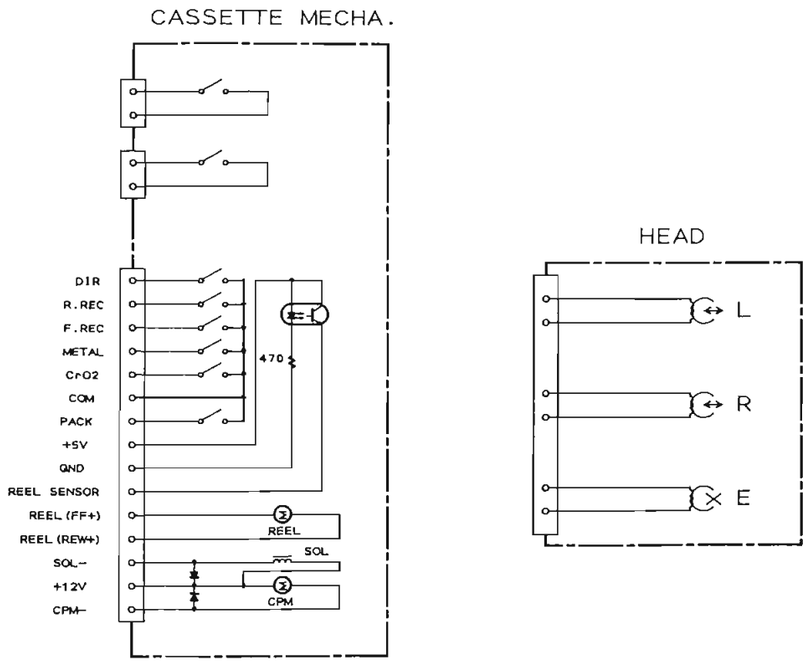

TAPE MECHANISM PARTS LIST

REF. NO.	PARTS NO.	DESCRIPTION
2-1	24602482	IDLER AS
2-2	24601245	REEL MOTOR
2-3	24611519	CHASSIS BASE AS
2-4	24602483	BASE AS (REEL)
2-5	24602484	BASE AS (REEL)
2-7	24609032	PAN HEAD SCREW 2.6 ×6.4ZN
2-8	24611177	PLASTIC WASHER1.7×3.2 ×.25
2-11	24611175	PLASTIC WASHER 2.1 ×7 ×.25
3	24611520	HEAD PLATE AS
3-3	24605766	SPRING
3-3-9	24609053	SCREW 1.7×5.2NT
3-3-10	24611521	HOUSING AS (HEAD)
3-5	24611493	BASE (HEAD)
3-7	24609054	SCREW 1.4×5.4NIT
3-8	24605765	SPRING (DOOR)
3-9	24605711	SPRING
3-11	833120059	TAPPING SCREW 2×5ZN
3-17	24606499	SOLENOID COIL
3-19	25055146	NPLG-2P130
4	24601270	MAIN MOTOR AS
5	24606490	P.C.B. (CONTROL)
5-12	24606491	LEAD WIRE (2P)
5-13	24606494	SG-107F3
5-14	24606492	JUMPER WIRE (2P)
5-15	24606493	JUMPER WIRE (15P)
5-17	24606271	PUSH SWITCH
8	24605717	SPRING
9	24611384A	SLIDE PLATE
12	24607116	ARM (PLAY)
14	24602550	CAM GEAR
15	24603365A	LEVER (REC)
16	24603387	LEVER (PAC) P
17	24603367	LEVER (METAL) L
18	24602551	MAIN BELT
20	24611041	PLASTIC WASHER 2.6 ×0.25
23	24610841	PLASTIC WASHER 2.6 ×4.7 ×.5
26	24605716	SPRING
29	24602552	FLYWHEEL AS
30	24602545	FLYWHEEL AS
31	24602414C	PINCH ROLLER AS (R)
32	24602421C	PINCH ROLLER AS
39	8930151	E WASHER 1.5S
40	24609055	SCREW
51	24606333	SOLENOID COIL AS
52	24606332A	CORE
53	24606331	PLANGER
61	24607121	MOTOR BRACKET
62	833130059	TAPPING SCREW CT3×5
63	833126049	TAP-TIGHT SCREW 2.6TTP+4C
64	24609056	SCREW (MOTOR)
65	24611523	CUSHION (MOTOR)
66	24602553	MAIN BELT
67	24611188A	WASHER (OIL SEAL)
68	24610844	WASHER 1.9 ×5 ×0.25
71	24611524	PLASTIC WASHER 2.1 ×0.13
72	24611525	PLASTIC WASHER 2.1 ×0.25
73	24611526	LOCK WASHER
74	24604100	SHAFT
76	24609057	TP SCREW
77	24602554	MOTOR PULLEY
84	24606495	WIRE CONNECTOR (R/P.E)

TAPE MECHANISM-EXPLODED VIEW

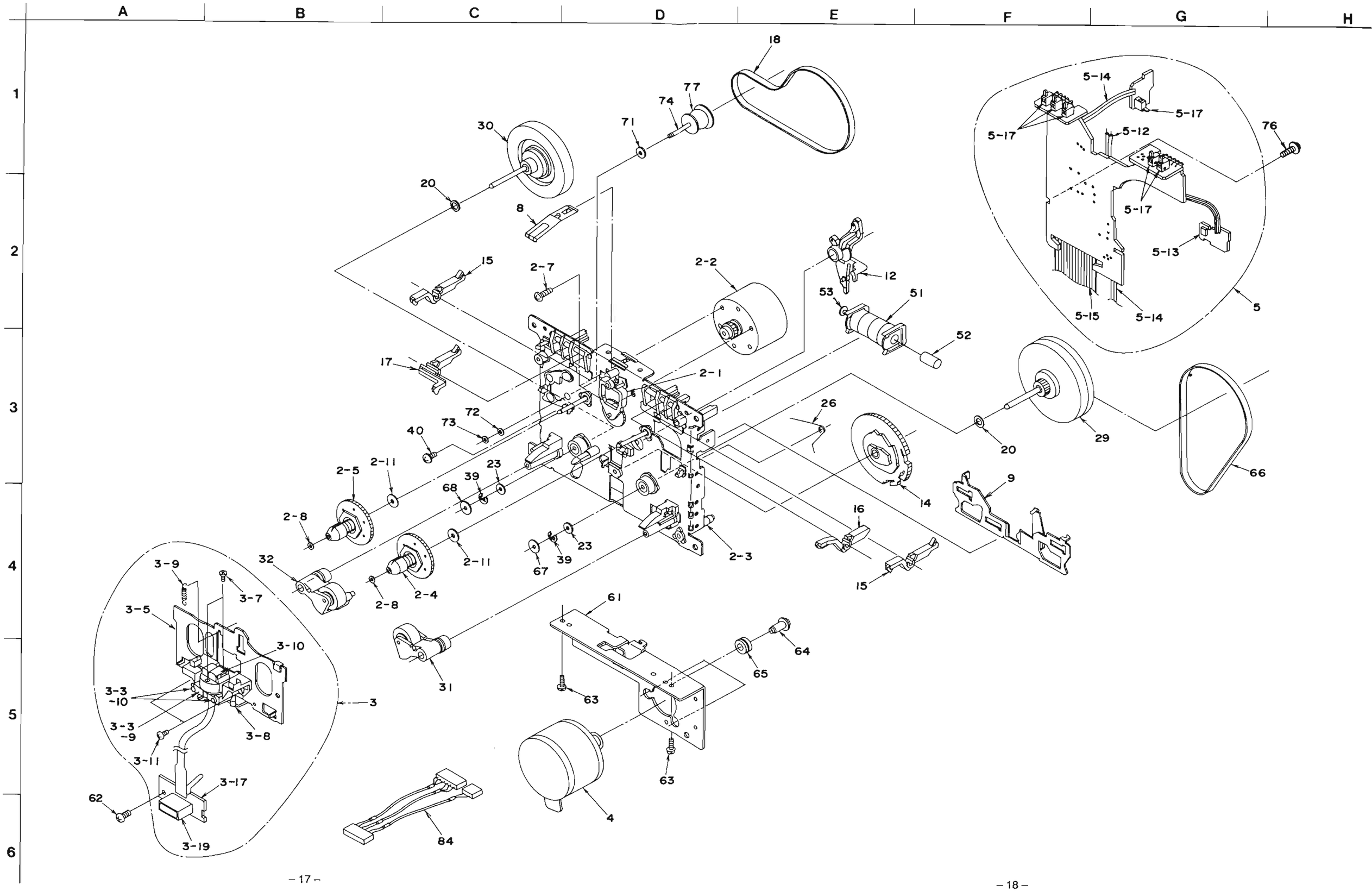

A B C D E F G H

SCHEMATIC DIAGRAM 1/4

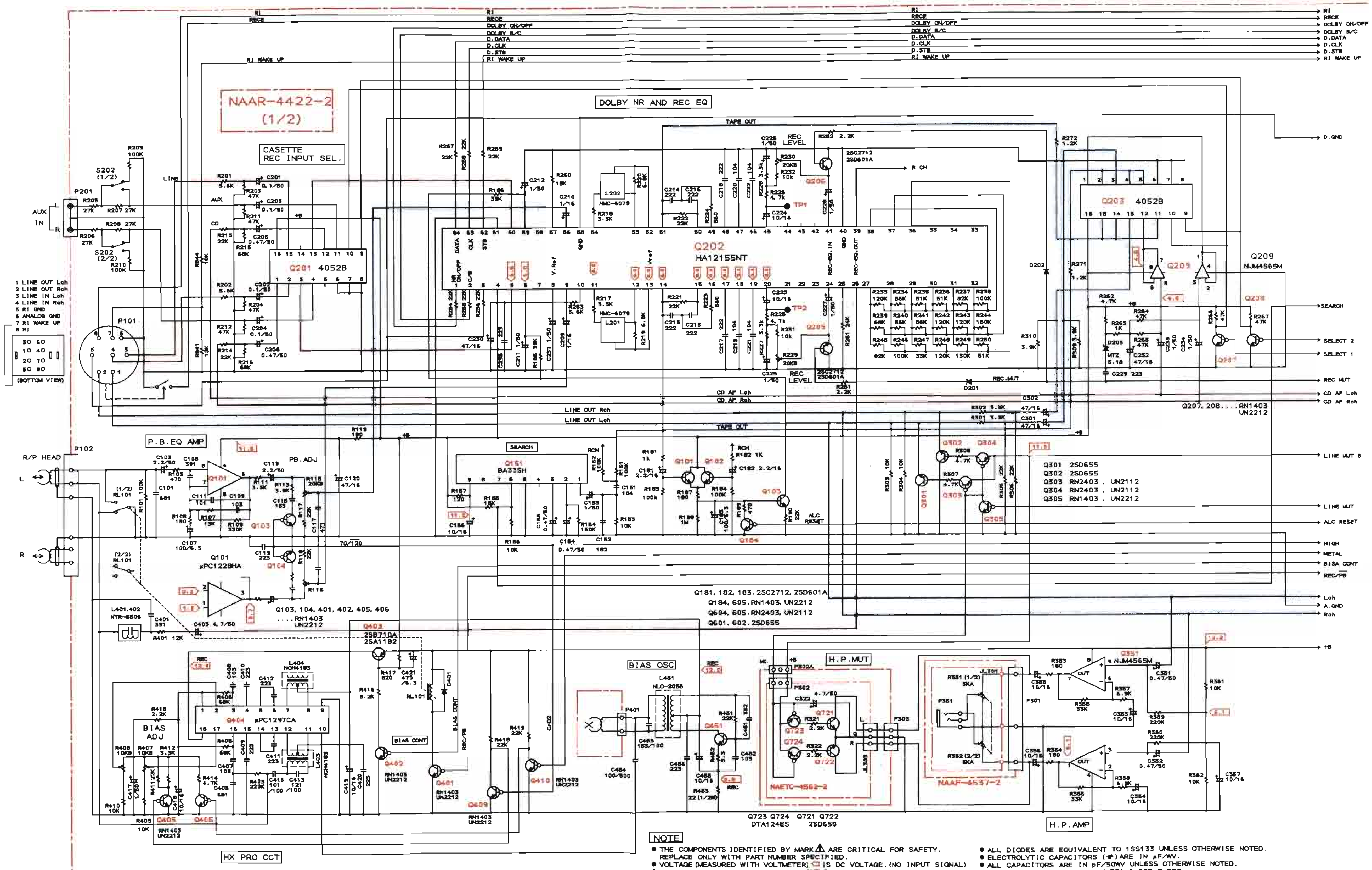

NOTE

- THE COMPONENTS IDENTIFIED BY MARK ⚠ ARE CRITICAL FOR SAFETY. REPLACE ONLY WITH PART NUMBER SPECIFIED.
- VOLTAGE (MEASURED WITH VOLTMETER) ▭ IS DC VOLTAGE. (NO INPUT SIGNAL)
- ALL PNP TRANSISTORS ARE EQUIVALENT TO 2SA1015-GR UNLESS OTHERWISE NOTED.
- ALL NPN TRANSISTORS ARE EQUIVALENT TO 2SC1815-GR UNLESS OTHERWISE NOTED.
- ALL DIODES ARE EQUIVALENT TO 1SS133 UNLESS OTHERWISE NOTED.
- ELECTROLYTIC CAPACITORS (⊣+) ARE IN μF/WV.
- ALL CAPACITORS ARE IN pF/50WV UNLESS OTHERWISE NOTED. EX)3pF→030, 33pF→330, 330pF→331, 0.033μF→333
- ALL RESISTORS ARE IN OHMS 1/10 WATTS UNLESS OTHERWISE NOTED.
- THE THICK LINES ON PC BOARD ARE THE PRINTING SIDE OF THE PARTS. EX) ▬ ✓PRINTING SIDE
- CIRCUIT IS SUBJECT TO CHANGE FOR IMPROVEMENT.

SCHEMATIC DIAGRAM 2/4

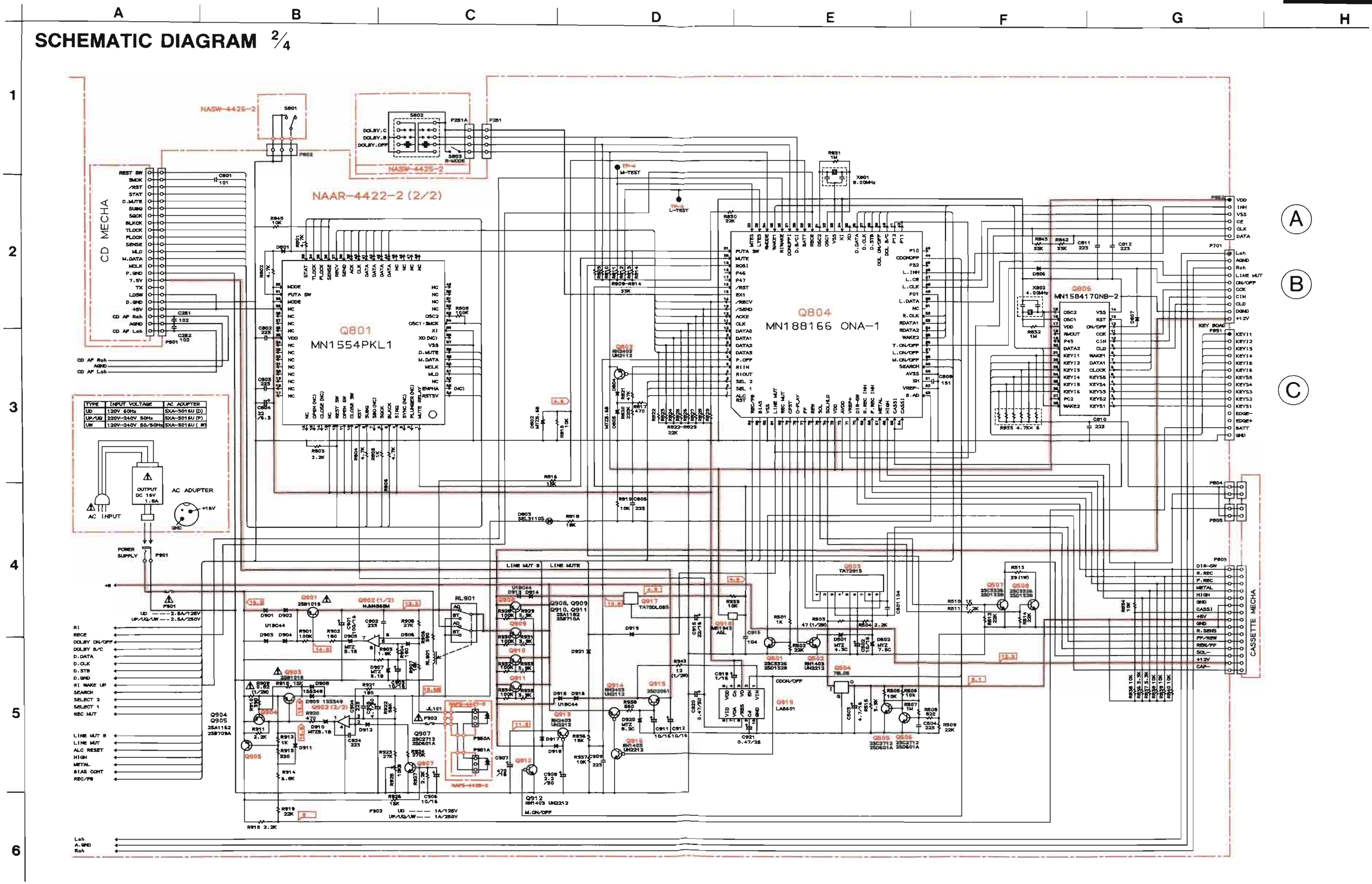

SCHEMATIC DIAGRAM 3/4

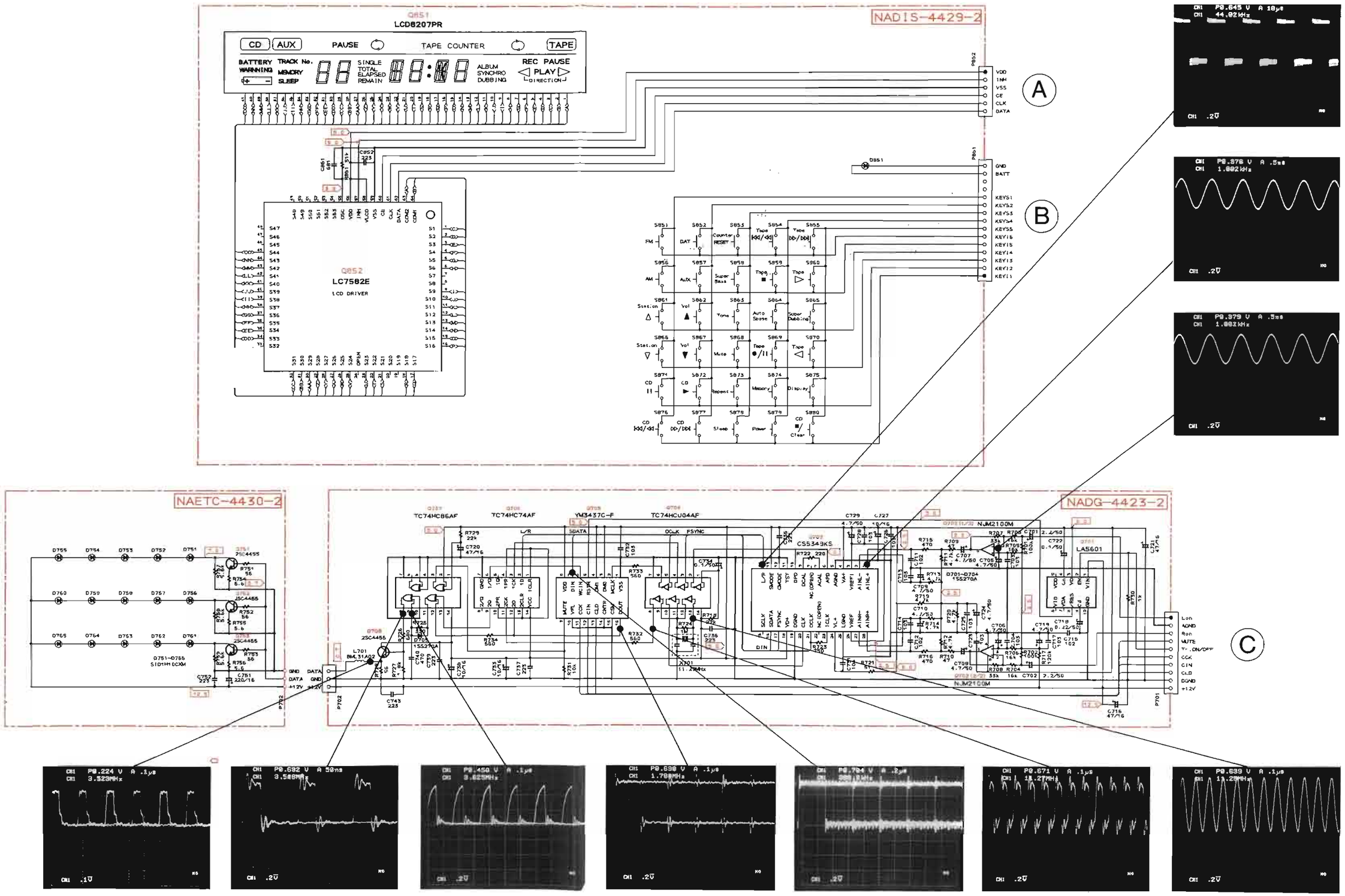

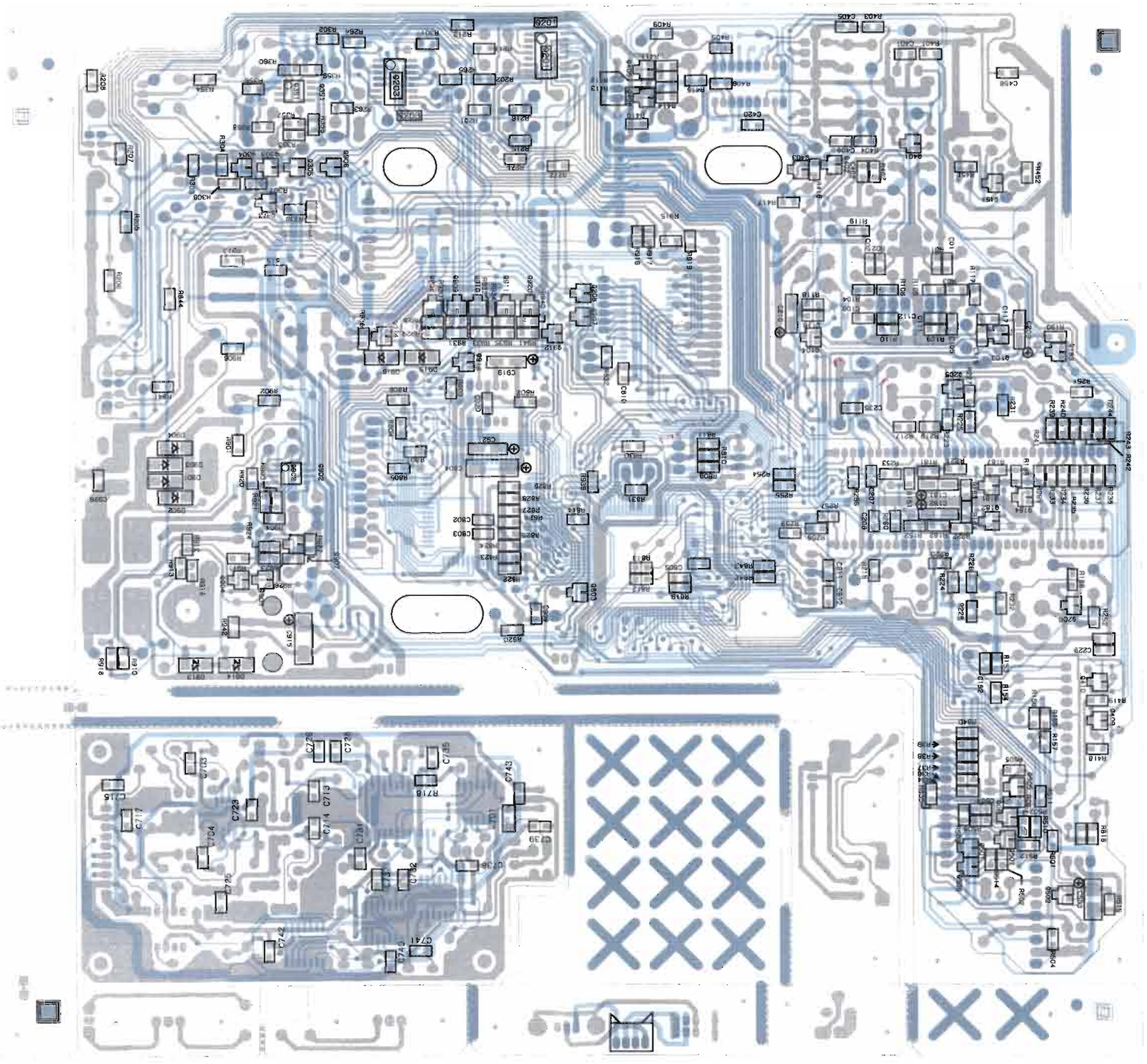

PRINTED CIRCUIT BOARD VIEW

NCAR-4422-2

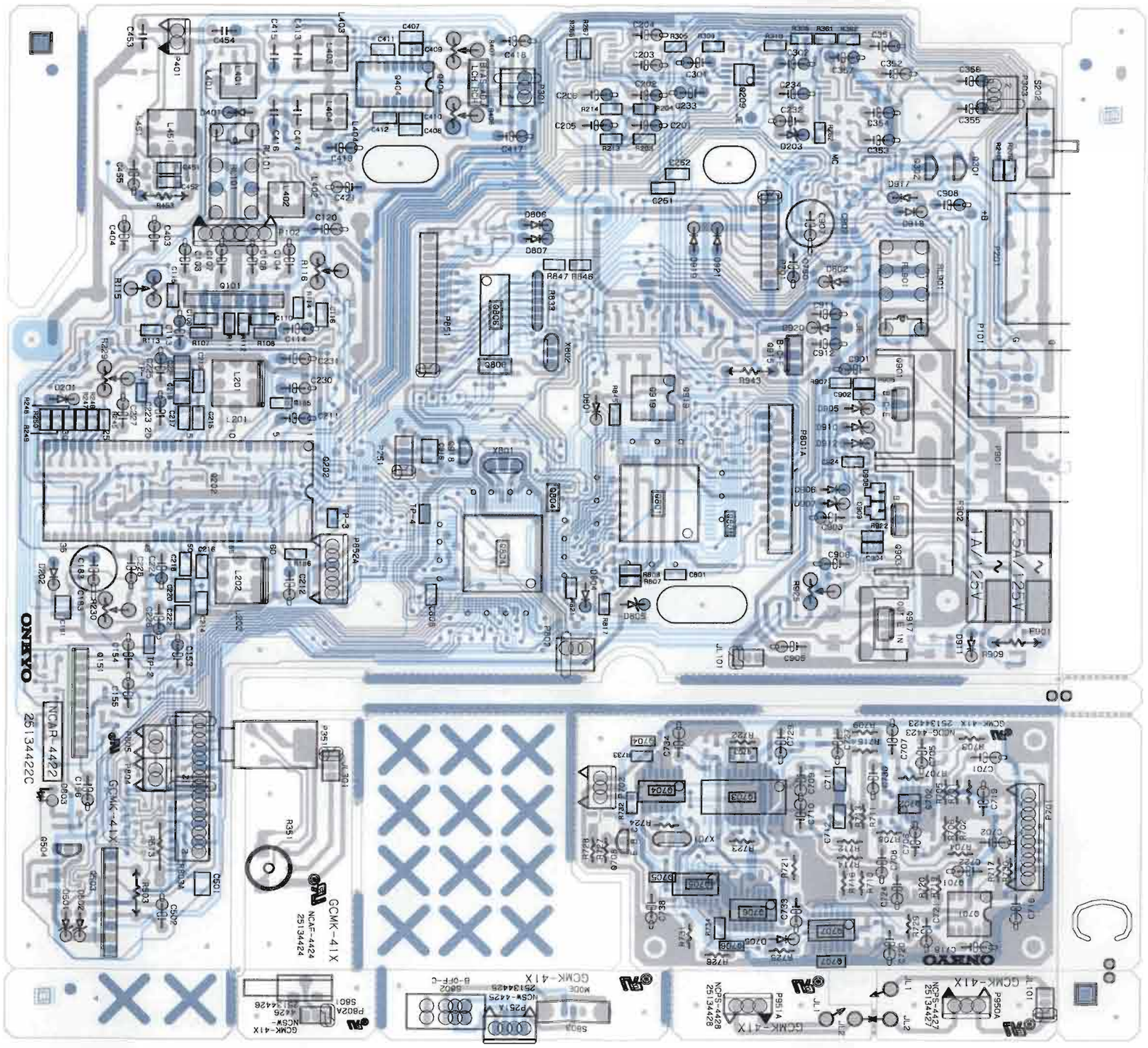

PRINTED CIRCUIT BOARD VIEW

NCDIS-4429-2

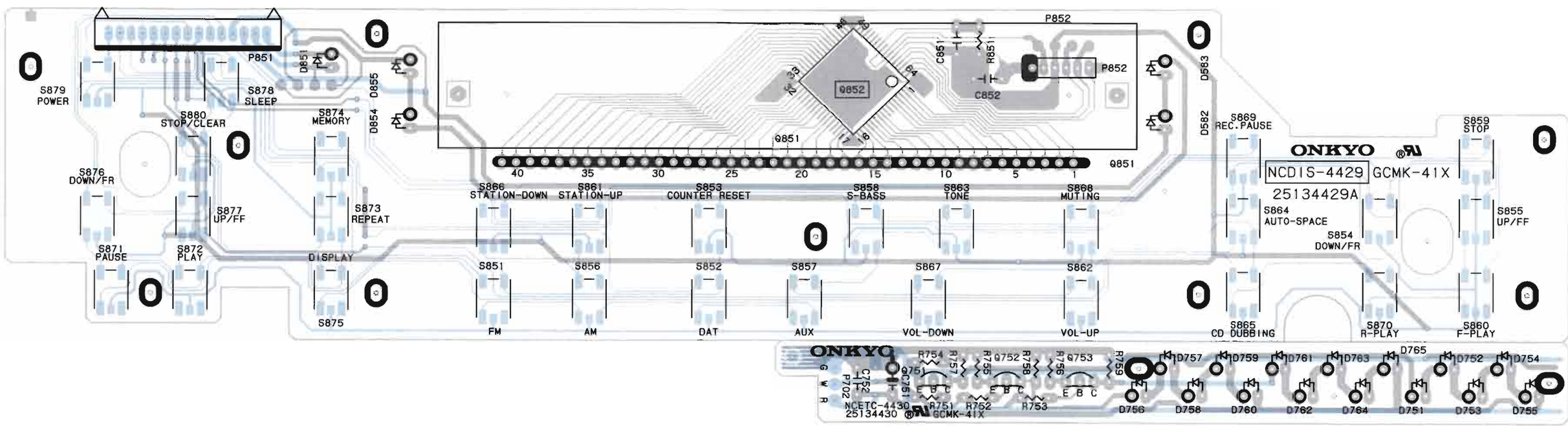

SCHEMATIC DIAGRAM 4/4

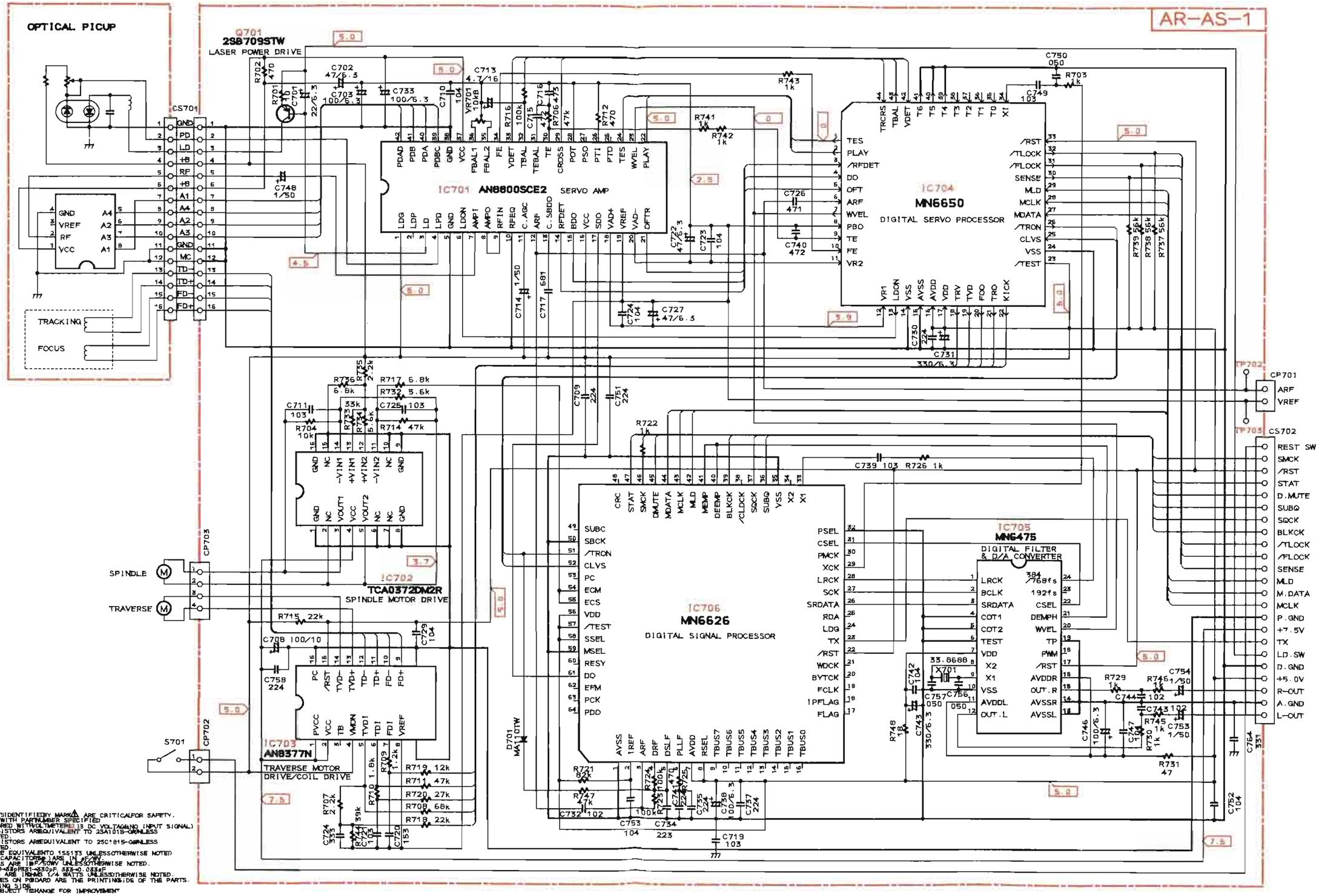

NOTE
- THE COMPONENTS IDENTIFIED BY MARK ⚠ ARE CRITICAL FOR SAFETY. REPLACE ONLY WITH PART NUMBER SPECIFIED.
- VOLTAGE MEASURED WITH VOLTMETER IS DC VOLTAGE AND (INPUT SIGNAL) OTHERWISE NOTED.
- ALL PNP TRANSISTORS ARE EQUIVALENT TO 2SA1015-O UNLESS OTHERWISE NOTED.
- ALL NPN TRANSISTORS ARE EQUIVALENT TO 2SC1815-O UNLESS OTHERWISE NOTED.
- ALL DIODES ARE EQUIVALENT TO 1SS133 UNLESS OTHERWISE NOTED.
- ELECTROLYTIC CAPACITORS ARE IN μF/V.
- ALL CAPACITORS ARE IN μF/50V UNLESS OTHERWISE NOTED. EXCEPT 30~39pF, 330~339pF, 331~330pF, 333~0.033μF.
- ALL RESISTORS ARE IN OHMS 1/4 WATTS UNLESS OTHERWISE NOTED.
- THE THICK LINES ON PCBOARD ARE THE PRINTING SIDE OF THE PARTS. EXCEPT PRINTING SIDE.
- CIRCUIT IS SUBJECT TO CHANGE FOR IMPROVEMENT

LCD8207PR (DISPLAY TUBE)

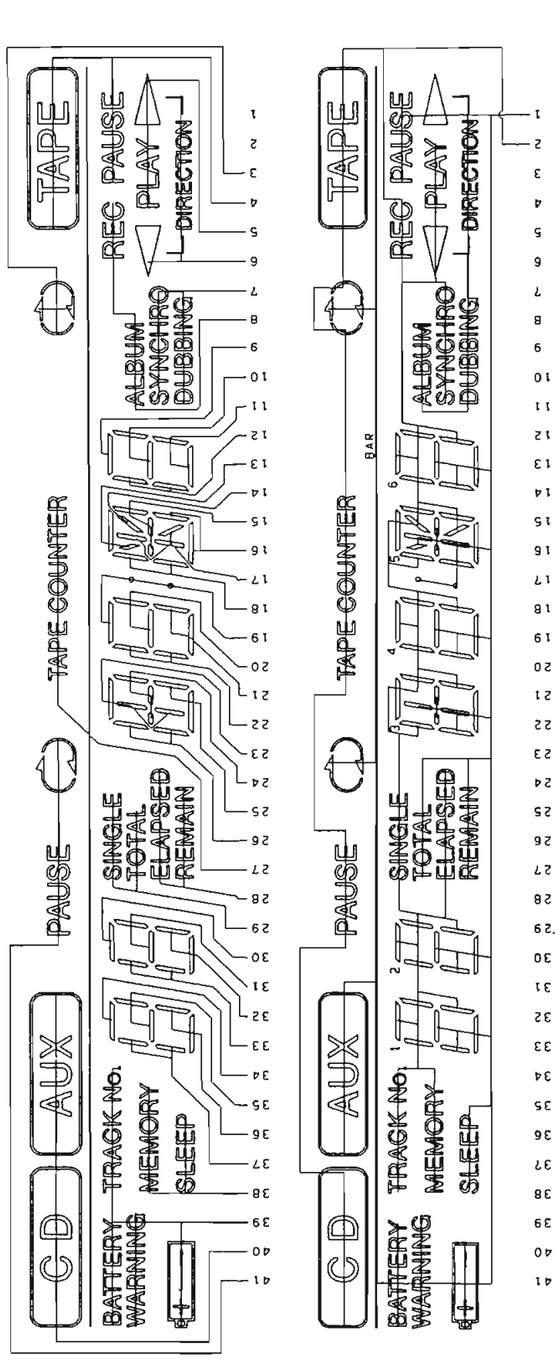

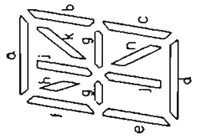

NO	1	2	3	4	5	6	7	8	9	10	11	12	13	14	15	16	17	18	19	20	21	22	23	24	25	26	27	28	29	30
COM1	—	COM	( )	TAPE	PLAY	▽	SYNC HRO	REC	6 a	6 b	6 c	6 f	5 a	5 k	5 b	5 c	5 n	5 f	4 a	4 b	4 c	4 f	3 a	3 b	3 c	3 f	2 1	ELAP SED	SINGLE	2 a
COM2	COM	—	⅟	PAUSE	△	1)	DUBB ING	ALBUM	—	6 g	6 d	6 e	5 h	—	5 g	5 d	5 j	5 e	COL	4 g	4 d	4 e	3 j	3 g	3 d	3 e	BAR	REMAIN	TOTAL	—

NO	31	32	33	34	35	36	37	38	39	40	41
COM1	2 b	2 c	2 f	1 a	1 b	1 c	1 f	MEMORY	TRACK NO.	CD	PAUSE
COM2	2 g	2 d	2 e	—	1 g	1 d	1 e	SLEEP	3)	AUX	O

1) DIRECTION
2) TAPE COUNTER
3) BATTERY WARNING

IC BLOCK DIAGRAM

CS539-KS (A/D Converter)

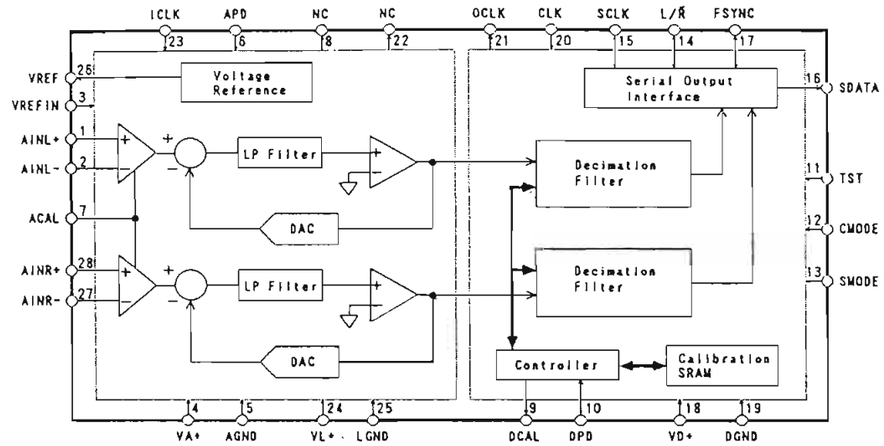

YM 3437C-F (Digital interphase)

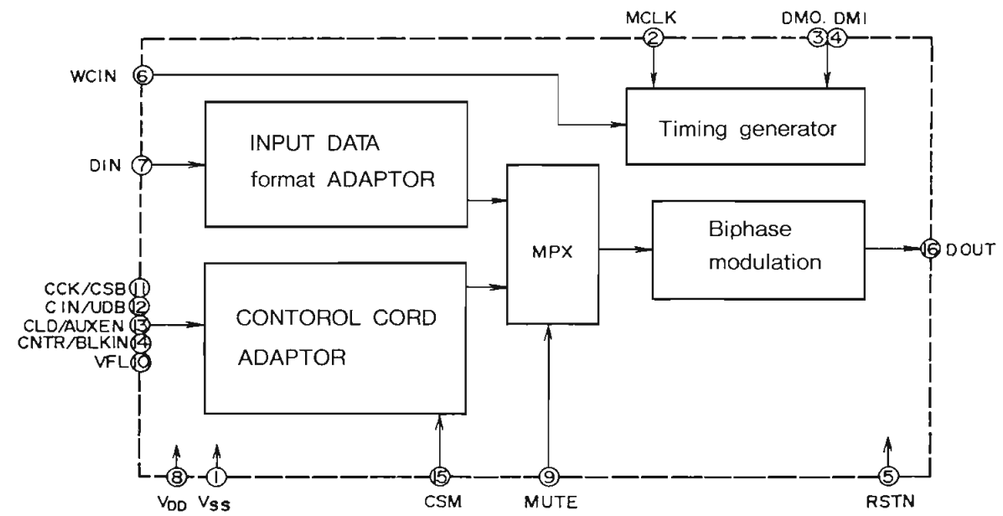

ONKYO CORPORATION

International Division
Onariomon Yusen Bldg.,23-5,Nishi-Shinbashi
3-chome,Minato-ku,TOKYO 105,JAPAN
Tel:03-3432-6987 Fax:03-3436-6979

ONKYO U.S.A CORPORATION
200 Williams Drive,Ramsey,N.J. 07446,U.S.A.
Tel:201-825-7950 Fax:201-825-8150

ONKYO DEUTSCHLAND GMBH ELECTRONICS
Industriestrasse 20,8034 Germering, GERMANY
Tel:089 84 93 20 Fax:089 84 93 226

ONKYO FRANCE S.A.R.L.
Immeuble Le DIAMANT,Domaine Technologique De
Saclay,4 rue Rene Razel,91892 SACLAY,FRANCE
Tel:(1)69 41 35 10 Fax:(1)69 41 35 84

ONKYO Europe GmbH
Hellersbergstrasse 4, W-4040 Neuss,GERMANY
Tel:02101 12 00 75 Fax:02101 10 33 06

OM3424 A204 Printed in Japan