SERVICE MANUAL 2216B

marantz

model 2216B

Stereophonic Receiver

TABLE OF CONTENTS

SECTION	PAGE
1. INTRODUCTION	1
2. SERVICE NOTES	1
3. TEST EQUIPMENT REQUIRED FOR SERVICING	2
4. AM ALIGNMENT PROCEDURE	3
5. FM ALIGNMENT PROCEDURE	3
6. POWER AMPLIFIER ADJUSTMENT	4
7. VOLTAGE CONVERSION FOR EUROPEAN MODEL	5
8. FTZ REGULATION FOR EUROPEAN MODEL	5
9. MAJOR COMPONENT LOCATIONS	6
9.1 Front Panel Adjustment and Component Locations	6
9.2 Main Chassis Component Locations (Top View)	6
9.3 Rear Panel Adjustment and Component Locations	7
9.4 Main Chassis Component Locations (Bottom View)	7
10. DIAGRAM AND COMPONENT LOCATIONS	8
10.1 FM Front End Assembly (PI00) Schematic Diagram and Component Location	8
10.2 Monitor, Hi-Filter Loudness Switches Assembly (PH01) Schematic Diagram and Component Location	8
10.3 Phone Equalizer Amp. Assembly (P400) Schematic Diagram and Component Location	9
10.4 Dial Lamp Assembly (PZ01)Schematic Diagram and Component Location	9
10.5 Pre & Tone Amp. Assembly (PE01) Schematic Diagram and Component Location	10
10.6 Tuner Assembly (P200) Schematic Diagram and Component Location	11
10.7 Main Amp. & Power Supply Assembly (P700) Schematic Diagram and Component Location	13
11. BLOCK DIAGRAM	15
12. CONNECTION DIAGRAMS	17
12.1 For U.S.A. & Canadian Model	17
12.2 For European Model	19
13. SCHEMATIC DIAGRAMS	21
13.1 For U.S.A. & Canadian Model	21
13.2 For European Model	23
14. EXPLODED MECHANICAL DIAGRAMS	25
14.1 Cabinet	25
14.2 Chassis	27
14.3 Rear Panel for U.S.A. & Canadian Model	29
14.4 Rear Panel for European Model	29
15. PACKING MATERIAL EXPLODED VIEW	30
16. PARTS LIST	31
17. TECHNICAL SPECIFICATIONS	39

3. TEST EQUIPMENT REQUIRED FOR SERVICING

Table 1 lists the test equipment required for servicing the Model 2216B Receiver.

Item	Manufacturer and Model No.	Use
AM Signal Generator		Signal source for AM alignment
Test Loop		Use with AM Signal Generator
FM Signal Generator MPX Signal Generator	Sound Technology Model 1000A	Signal source for FM alignment Stereo separation alignment and trouble shooting
Distortion Analyzer Audio Oscillator AC VTVM	Sound Technology Model 1700A	Distortion measurements Sinewave and squarewave signal source Voltage measurements (AC)
Oscilloscope	Tektronix Model T932 Philips Model 3232	Waveform analysis and trouble shooting and ASO alignment
Frequency Counter	Fluke Model 1900A	MPX Oscillator adjustment (VCO)
Circuit Tester		Trouble shooting
DC VTVM	Fluke Model 8000 "Digital"Simpson Model 313, Triplet Model 801	Voltage measurements (DC)
AC Wattmeter	Simpson Model 1379	Monitors primary power to amplifier
AC Ammeter	Commercial Grade (1-10A)	Monitors amplifier output under short circuit condition
Line Voltmeter	Simpson Model 1359	Monitors potencial of primary power to amplifier
Variable Autotransformer	Superior Electronic Co., Powerstat Model 116B—10A	Adjusts level of primary power to amplifier
Shorting Plug	Use phono plug with 600 ohm across center pin and shell	Shorts amplifier input to eliminate noise pickup
Output Load (8 ohms, ±0.5%, 100W)	Commercial Grade	Provides 8-ohm load for amplifier output termination
Output Load (4 ohms, ±0.5%, 100W)	Commercial Grade	Provides 4-ohm load for amplifier output termination

4. AM ALIGNMENT PROCEDURE

4.1 AM IF ALIGNMENT

1. Connect a sweep generator to the L153 and an alignment scope to the J233.
2. Rotate each core of IF transformers L155 and L156 for the maximum height and flat top symmetrical response.

4.2 AM FREQUENCY RANGE AND TRACKING ALIGNMENT

1. Set AM signal generator to 515 kHz. Turn the tuning capacitor fully closed (place the tuning pointer at the low end) and adjust the oscillator coil L154 for maximum audio output.
2. Set the signal generator to 1650 kHz. Place the tuning pointer in the high frequency end and adjust the oscillator trimmer on the oscillator tuning capacitor for maximum audio output.
3. Repeat steps 1 and 2 until no further adjustment is necessary.
4. Set the generator to 600 kHz, tune the receiver to the same frequency and adjust a slug core of AM ferrite-rod antenna L001 for maximum output.
5. Set the generator to 1400 kHz and tune the receiver to the same frequency and adjust the trimming capacitor on the antenna tuning capacitor for maximum output.
6. Repeat procedures 4 and 5 until no further adjustment is necessary.

NOTE

During tracking alignment reduce the signal generator output as necessary to avoid AGC action.

5. FM ALIGNMENT PROCEDURE

5.1 FM FREQUENCY RANGE AND TRACKING ALIGNMENT

1. Connect an FM signal generator to the FM antenna terminals and an oscilloscope and an audio distortion analyzer to the TAPE OUT jacks on the rear panel.
2. Set the generator to 87.4 MHz and provide about 3 to 5 μV. Place the tuning pointer at the low frequency end by rotating the tuning knob and adjust the pitch of oscillator coil L107 to obtain maximum audio output.
3. Set the generator to 109 MHz and provide about 3 to 5 μV. Rotate the tuning knob and place the tuning pointer at the high frequency end and adjust the trimming capacitor C121 for maximum output.
4. Repeat steps 2 and 3 until no further adjustment is necessary.
5. Set the generator to 90 MHz and tune the receiver to the same frequency. Decrease signal generator output until the audio output level decreases with the decreasing generator output. Adjust the pitch of antenna coil L102 and RF coil L104 for maximum output.
6. Set the generator to 106 MHz and tune the receiver to the same frequency. Decrease the signal generator output until the audio output level decreases with the decreasing generator output. Adjust the trimming capacitors of antenna and RF tuning circuits for maximum output.
7. Repeat steps 5 and 6 until no further adjustment is necessary.
8. Adjust the primary core (lower core) of discriminator transformer L202 so that the center tuning meter pointer indicates its center at no signal applied. Set the FM signal generator to 98 MHz and increase its output level 1 KμV and tune the receiver to the same frequency so that the center tuning meter pointer indicates its center. Adjust the secondary core (upper core) of L202 for minimum distortion.

5.2 STEREO SEPARATION ALIGNMENT

1. Set the FM signal generator to provide 1 KμV at 98 MHz. Tune the receiver to the same frequency so that the center tuning meter pointer indicates its center. Then turn off the modulation of the generator, connect a frequency counter to test point J229 and adjust R301 so that the frequency counter may precisely read 76 kHz.
2. Modulate the generator with stereo composite signal consisting of only L or R channel (of course a pilot signal must be included).

3. Adjust the trimming resistor R317 for maximum and same separation in both channels.

5.3 MUTING THRESHOLD ADJUSTMENT

1. Set the FM signal generator output to provide 12.5 μV (IHF) at 98 MHz and tune receiver to the same frequency. Adjust the trimming resistor R212 for the threshold level of 12.5 μV. (During this adjustment turn the FM MUTING pushswitch "on".)

5.4 FM TAPE OUT LEVEL ADJUSTMENT

1. Set the FM signal generator to provide a 1000 Hz, 100% modulated 98 MHz mono signal, at I KμV output. Precisely tune the receiver to 98 MHz.
2. Adjust R215 until the outputs of both channels are 1060 mV.

6. POWER AMPLIFIER ADJUSTMENT

Connect a VTVM between the test point (R731, R733) and adjust the trimming resistor R719 until the VTVM reads 9 mV DC. For the other channel, connect the VTVM between the test point (R732, R734) and adjust the R720 for the same reading.

● **EUROPEAN MODEL ONLY**

7. VOLTAGE CONVERSION

The European version of the Model 2216B is equipped with a universal power transformer that may be adjusted to operate at 110 V, 120 V, 220 V, or 240 V AC at 50 to 60 Hz. To convert the unit to a different power source voltage, reposition conversion plug at shown in Figure 2.

CAUTION

DISCONNECT POWER SUPPLY CORD FROM AC OUTLET BEFORE CONVERTING VOLTAGE.

Figure 2. Voltage Conversion Chart

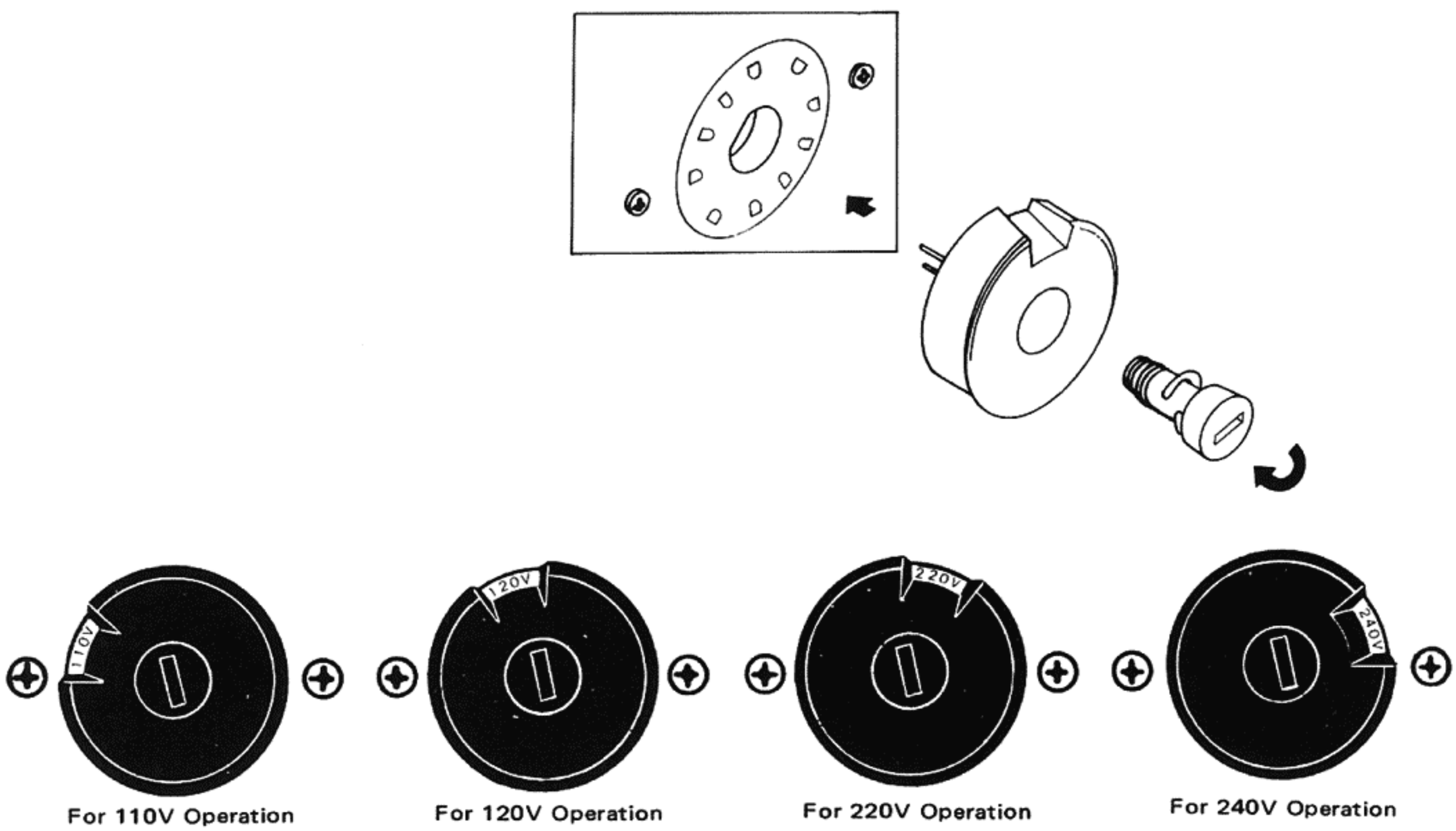

9. FTZ REGULATION

Instruction for the use
in the range other than specified in FTZ codes

Achtung für die Leute, die in dem Gebiet wohnen, wo die FTZ-Bestimmungen vorherrschend sind.

Sollte das Gerät auch für Frequenzen auszerhalb des in den FTZ-Bestimmungen angegebenen Bereiches empfangebereit sein, bitten wir, den Bereich durch Nachstellen des Kernes in der Oszillatorspule (in der Abbildung mit „FTZ" gekennzeichnet) so zu korrigieren, daß er den Bestimmungen entspricht.

9. MAJOR COMPONENT LOCATIONS

9.1 Front Panel Adjustment and Component Locations

9.2 Main Chassis Component Locations (Top View)

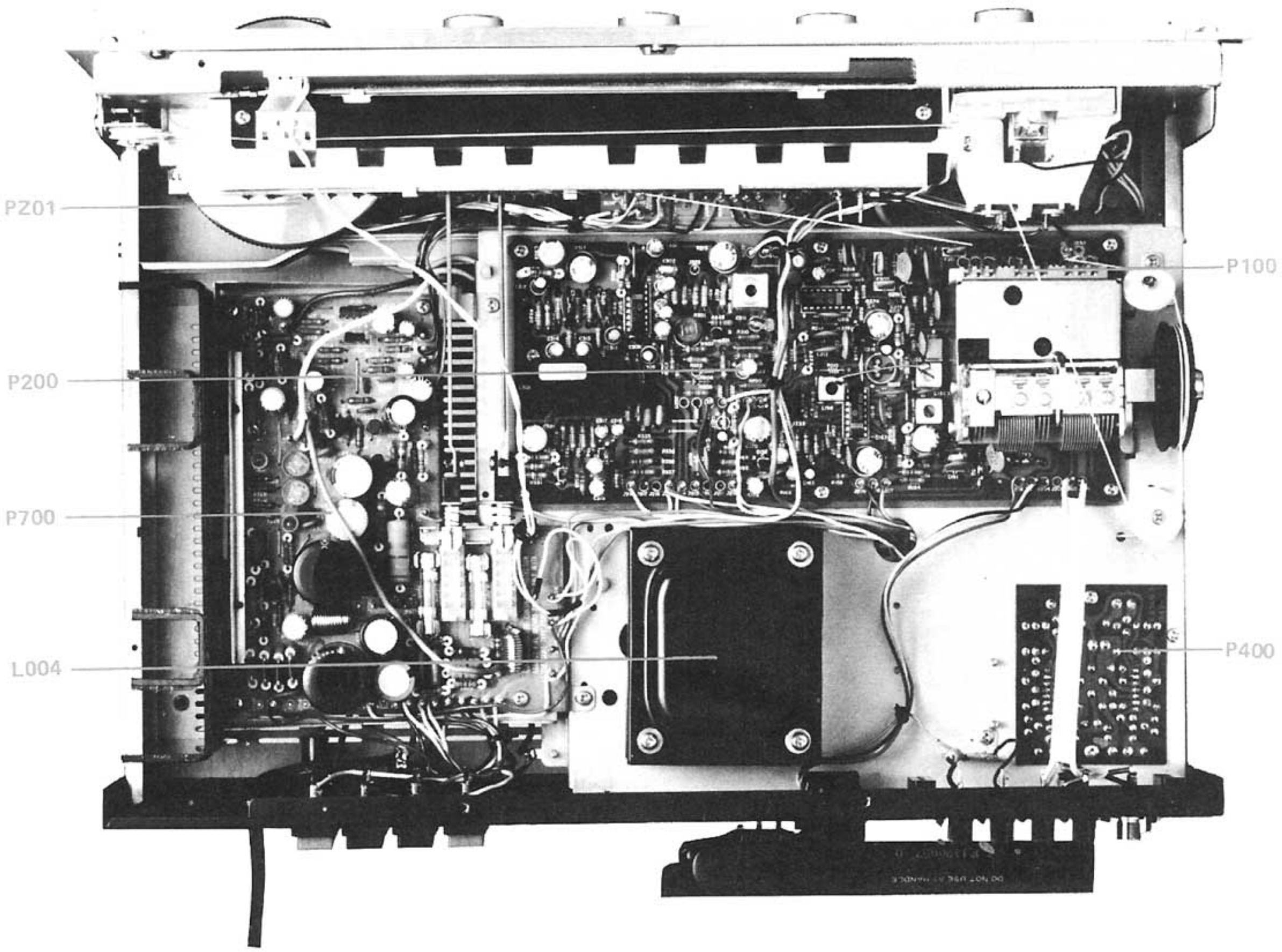

9.3 Rear Panel Adjustment and Component Locations

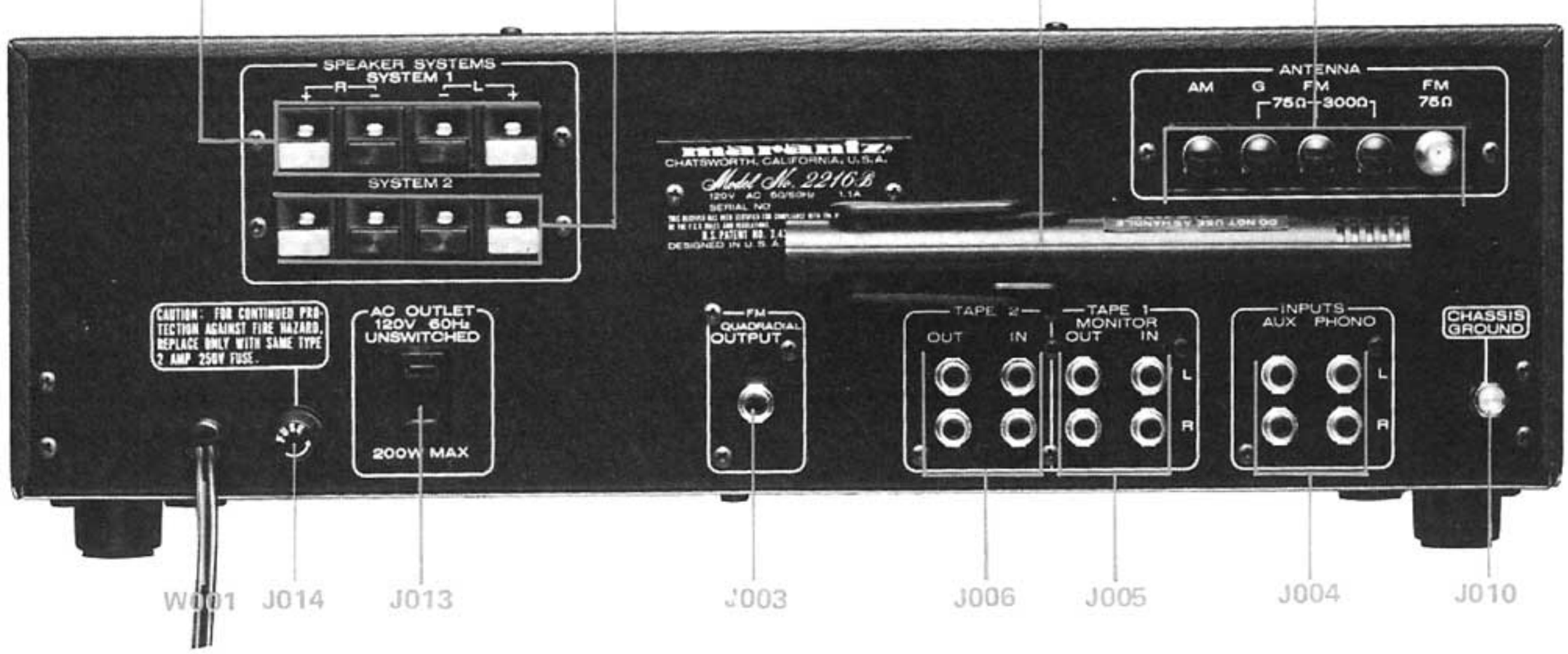

9.4 Main Chassis Component Locations (Bottom View)

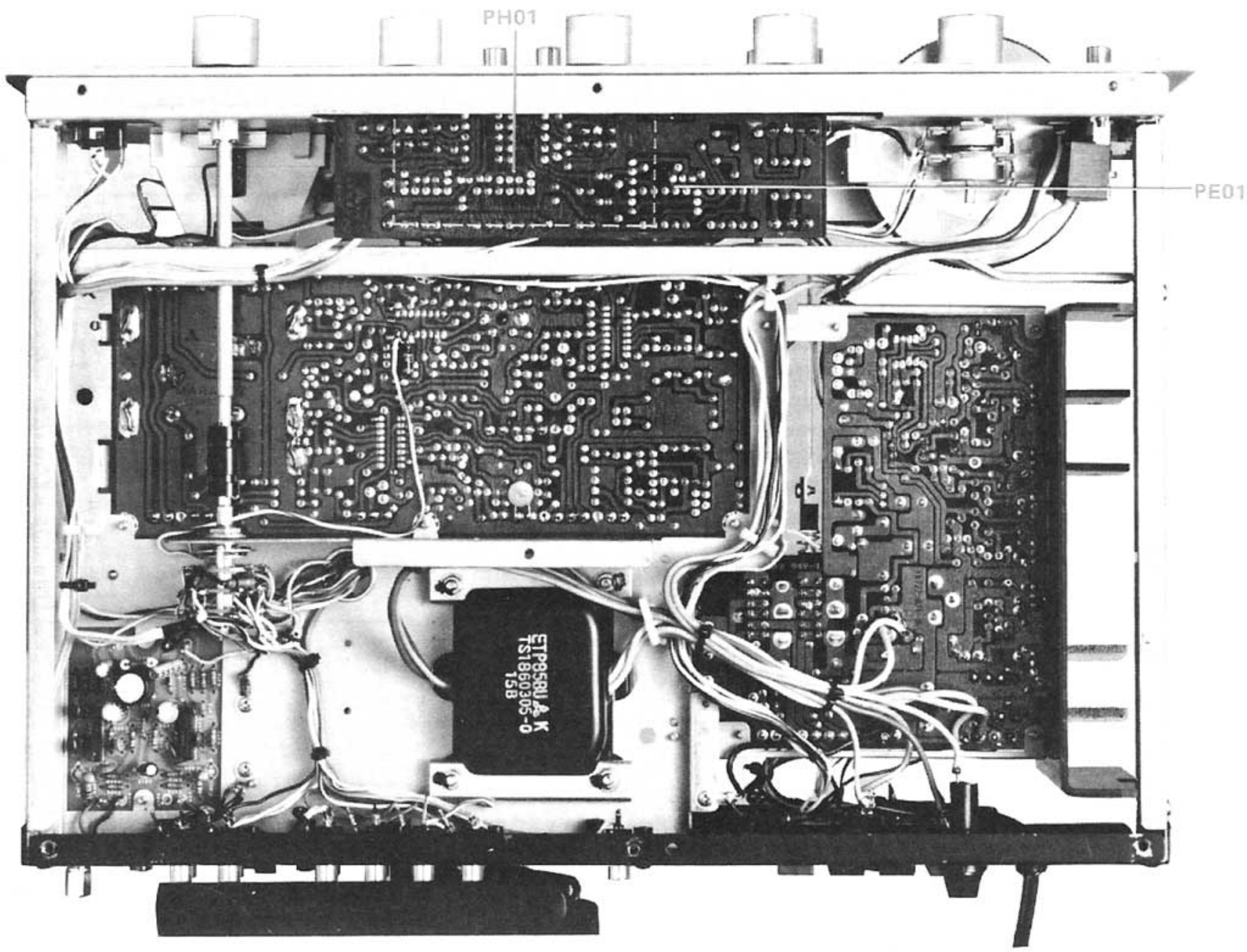

10. DIAGRAM AND COMPONENT LOCATIONS

10.1 FM Front End Assembly (P100) Schematic Diagram and Component Location

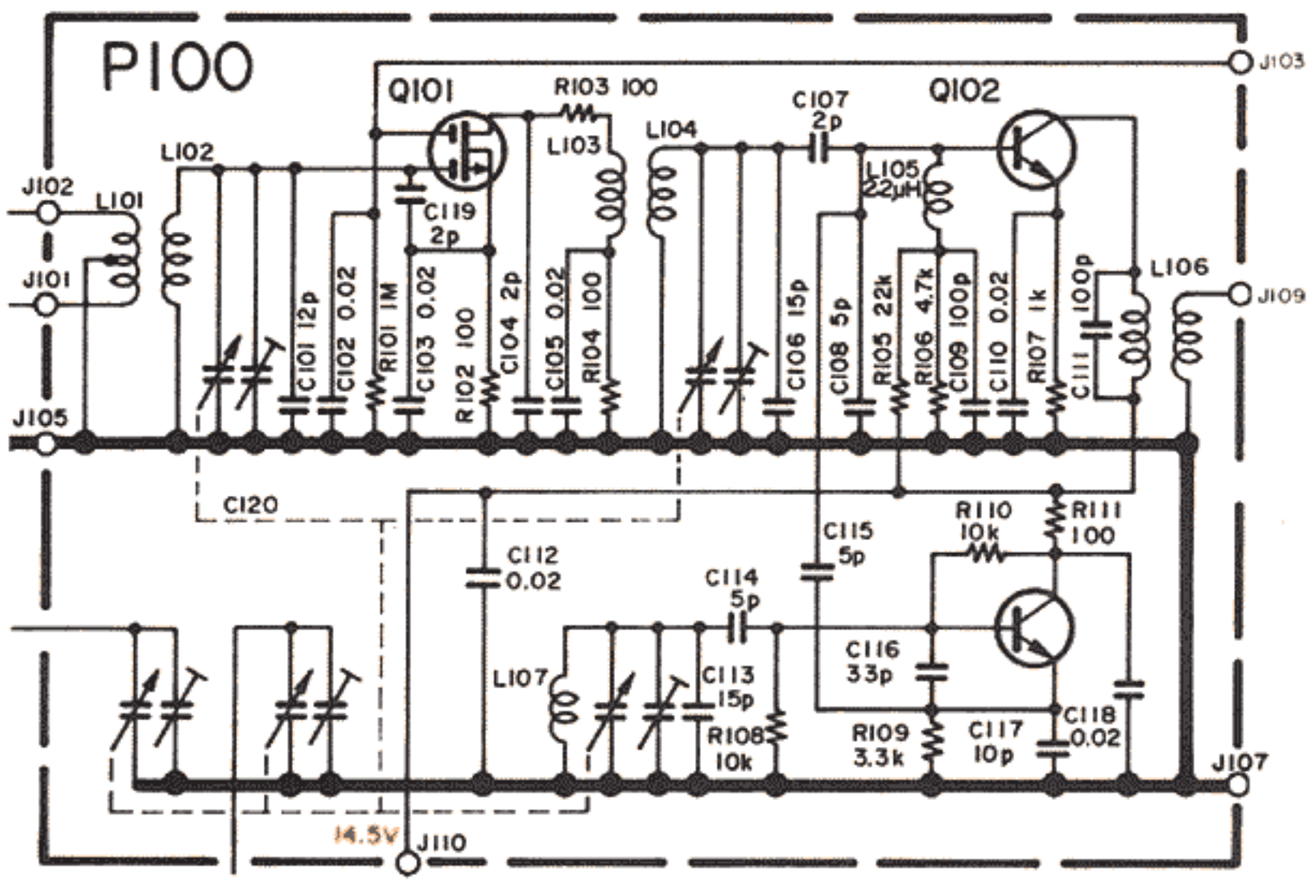

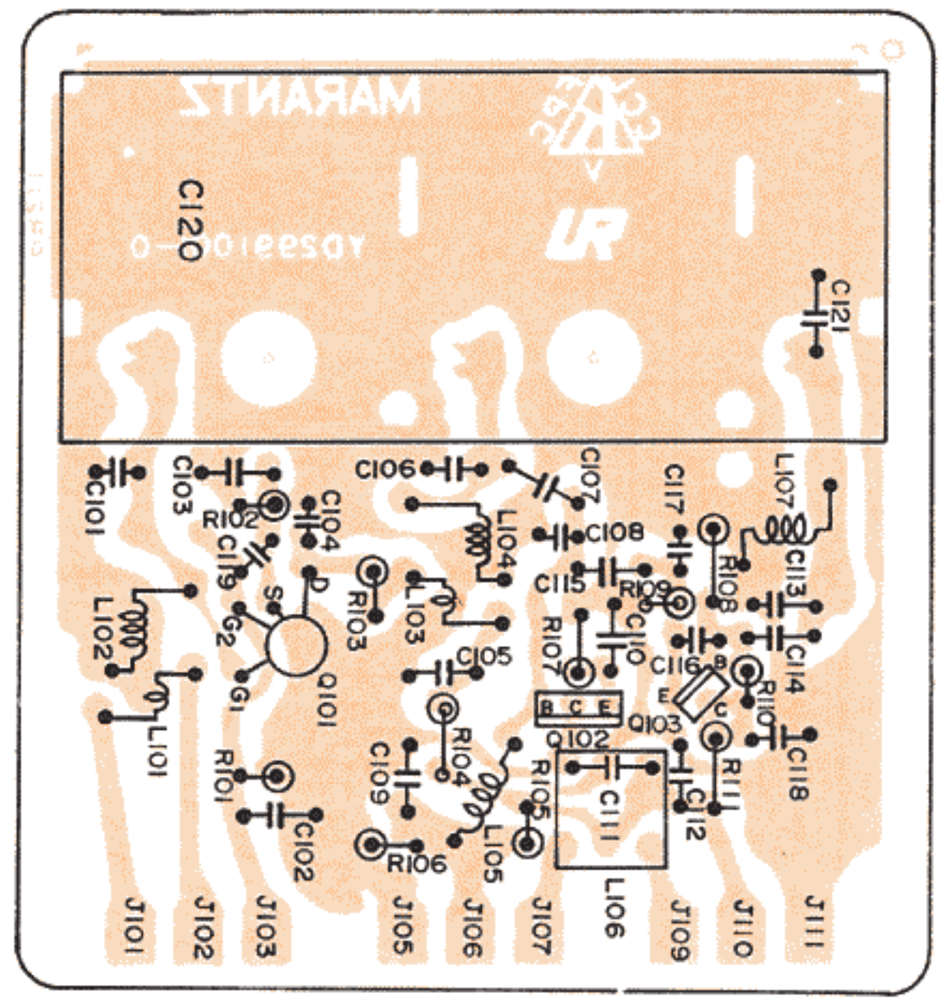

10.2 Monitor, Hi-Filter Loudness Switches Assembly (PH01) Schematic Diagram and Component Location

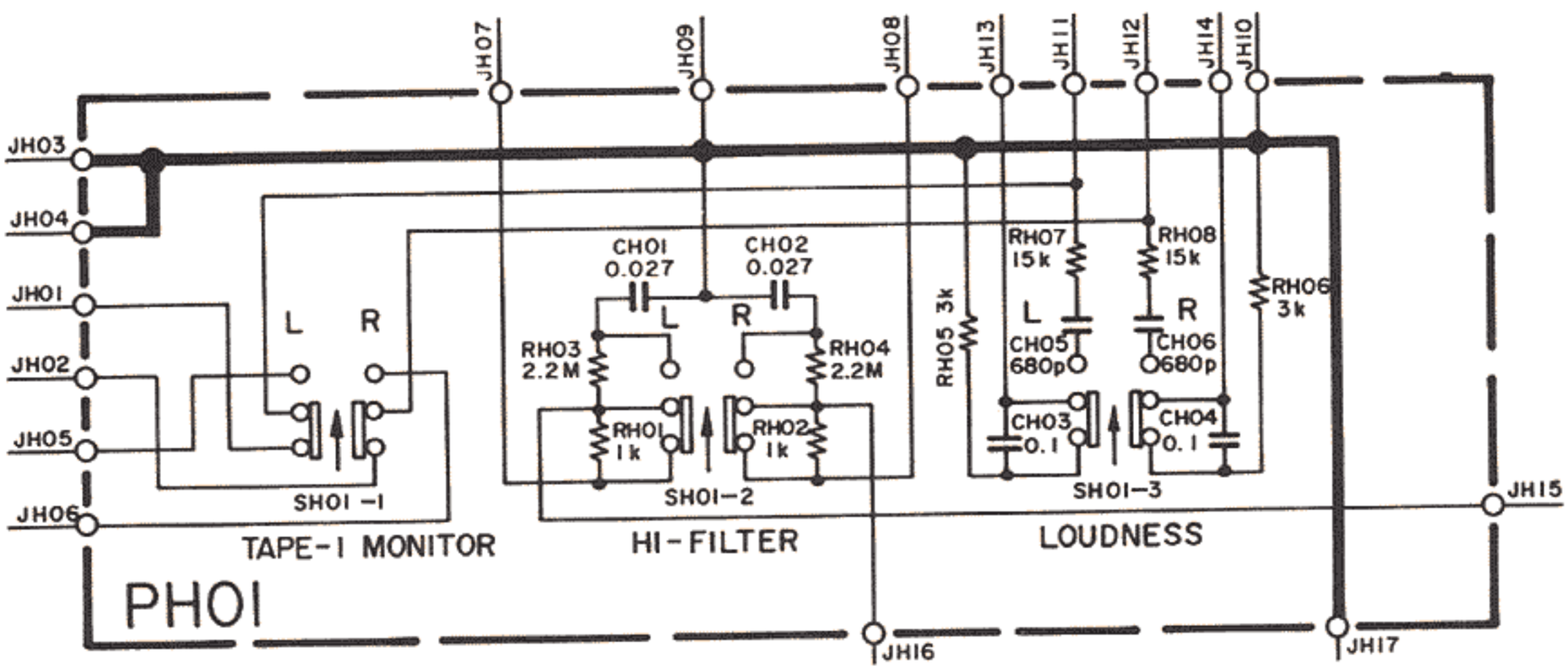

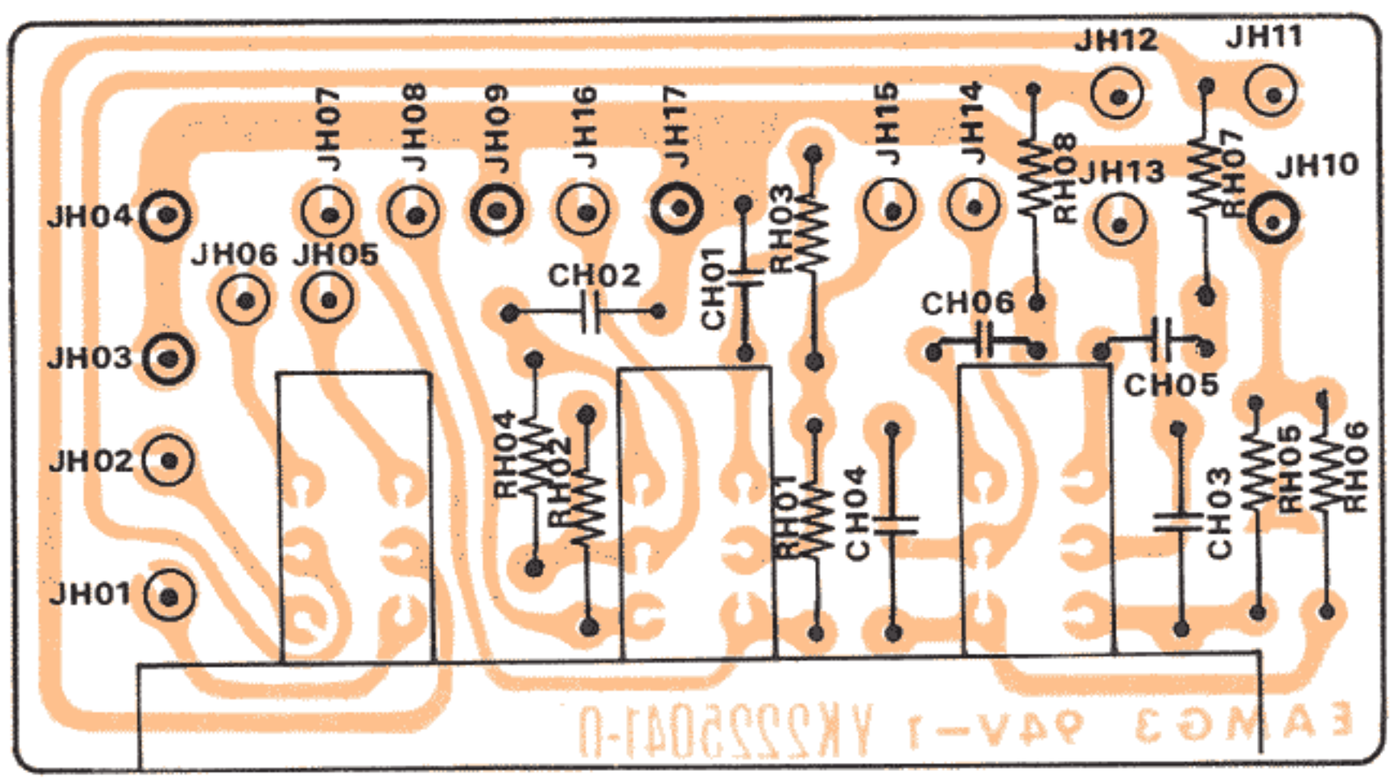

10.3 Phone Equalizer Amp. Assembly (P400) Schematic Diagram and Component Location

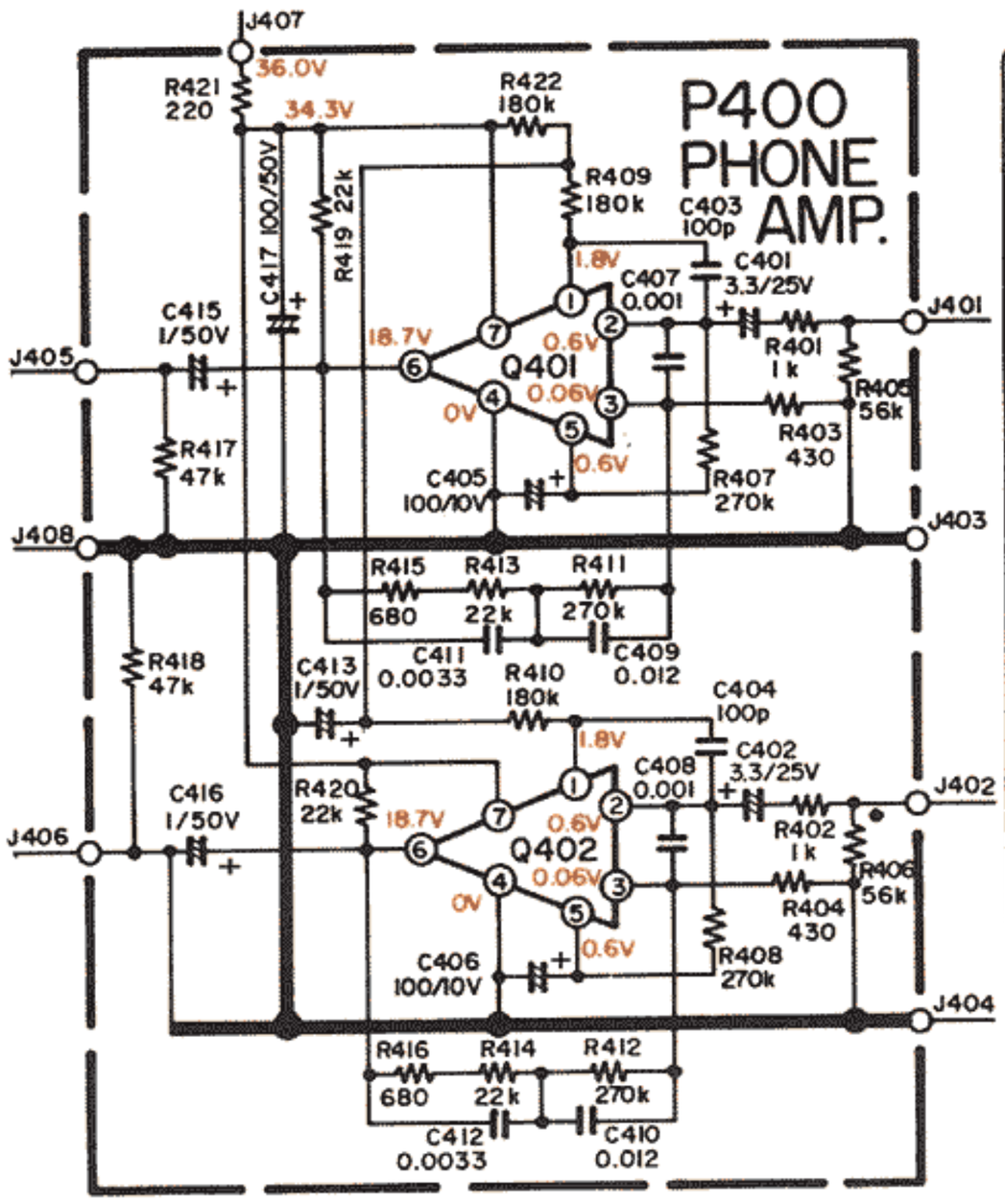

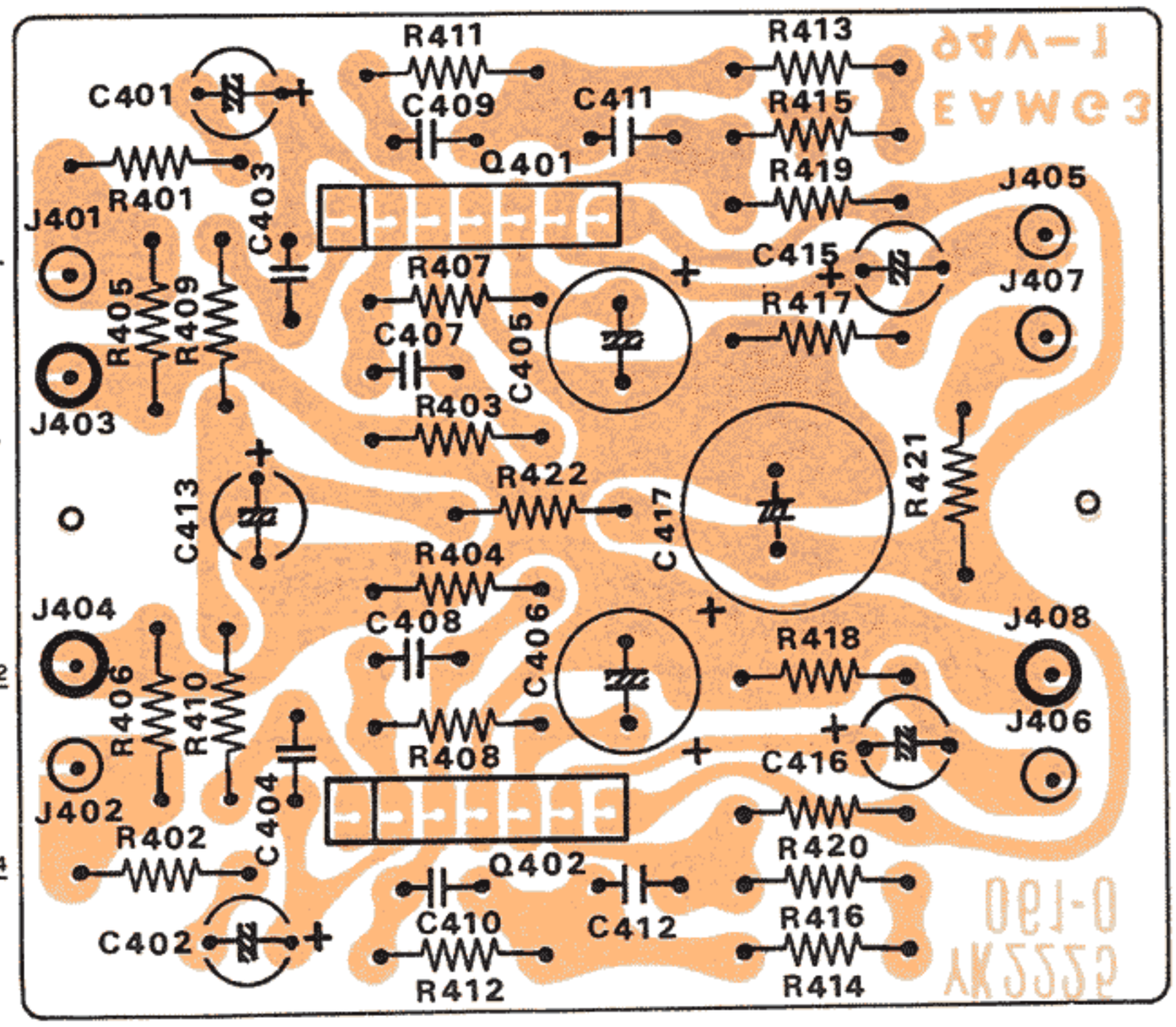

10.4 Dial Lamp Assembly (PZ01)Schematic Diagram and Component Location

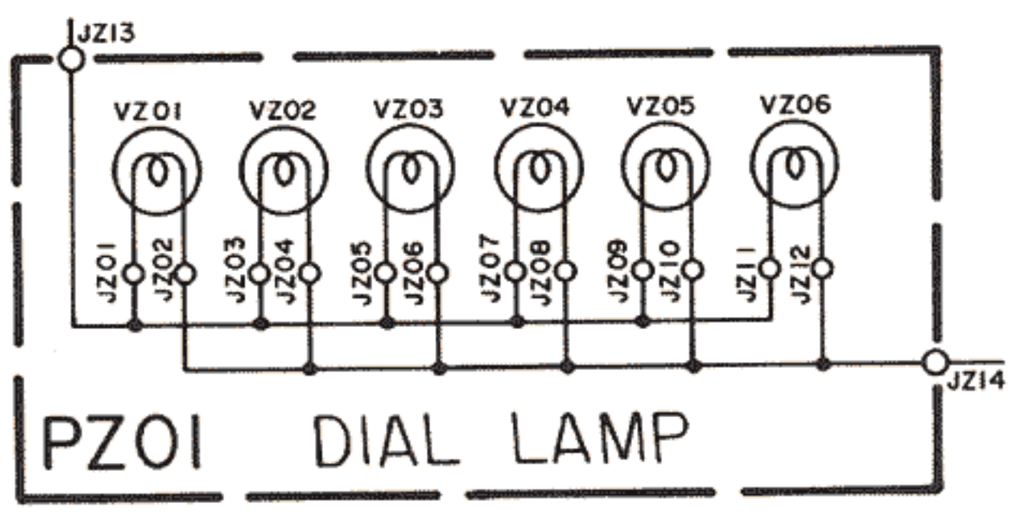

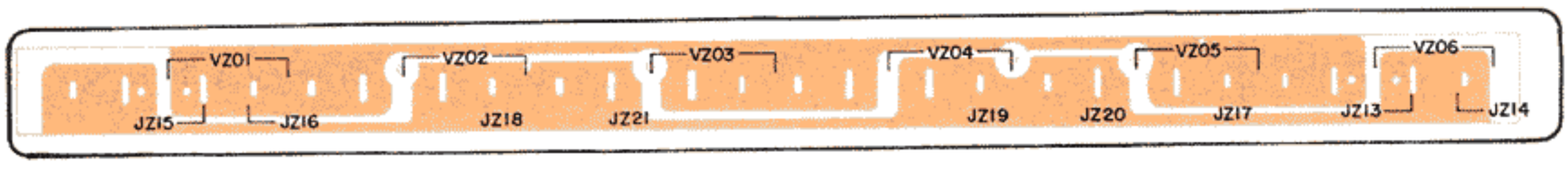

10.5 Pre & Tone Amp. Assembly (PE01) Schematic Diagram and Component Location

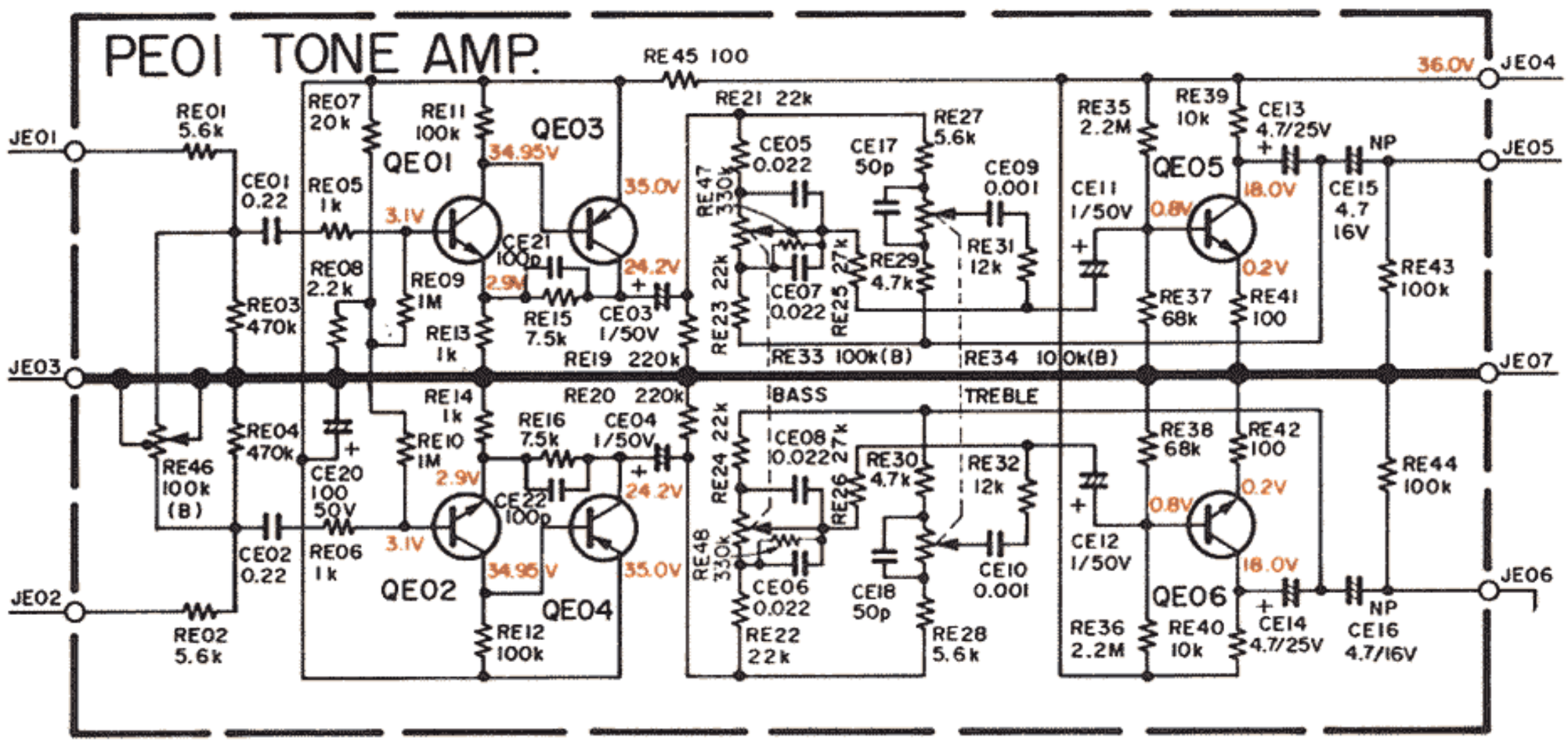

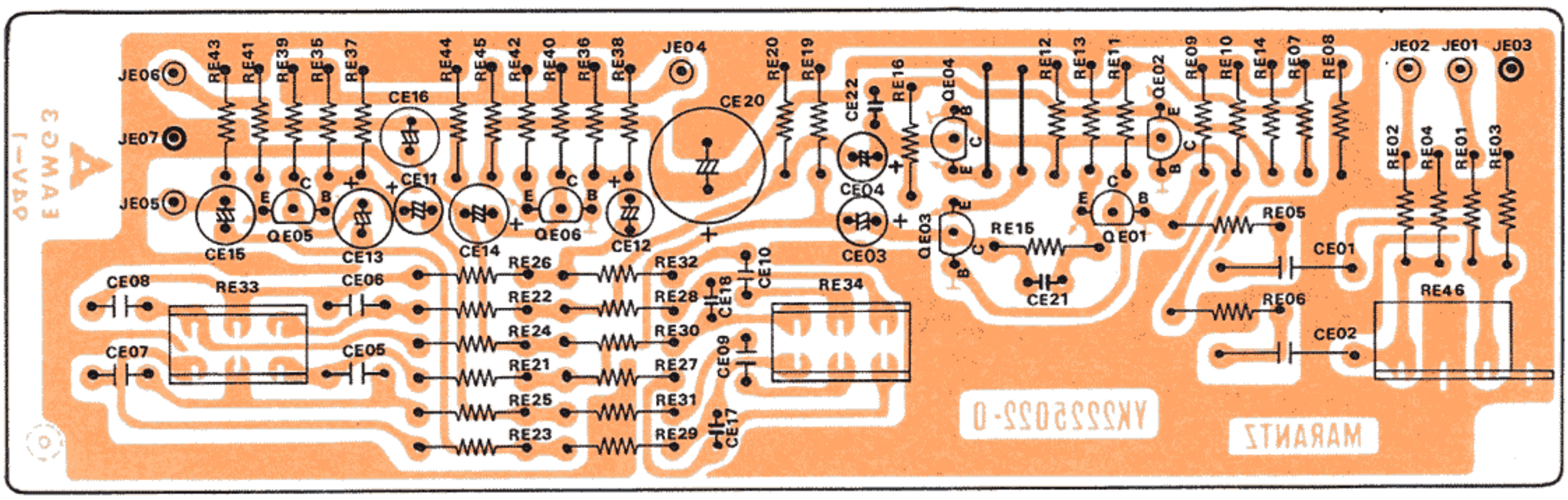

10.6 Tuner Assembly (P200) Schematic Diagram and Component Location

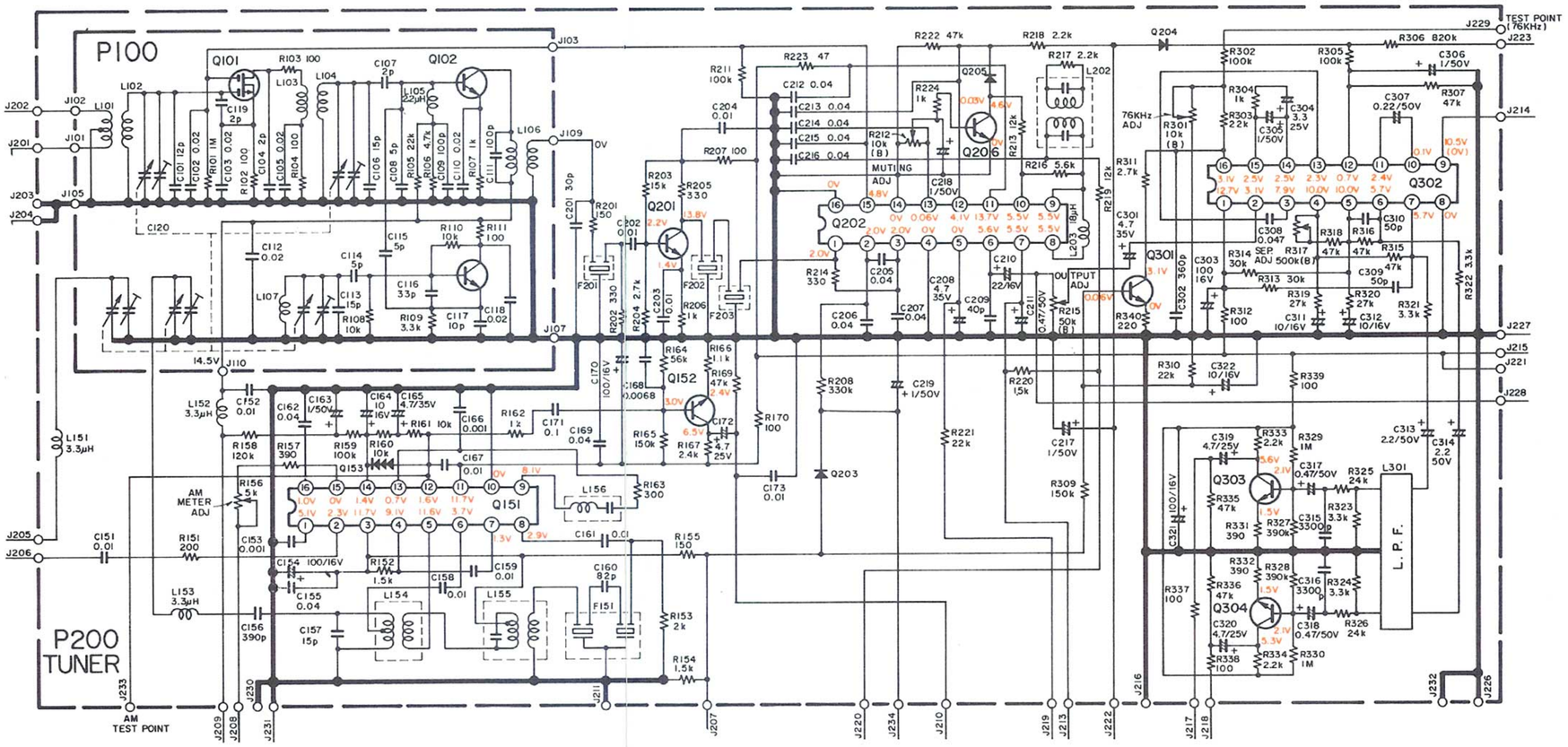

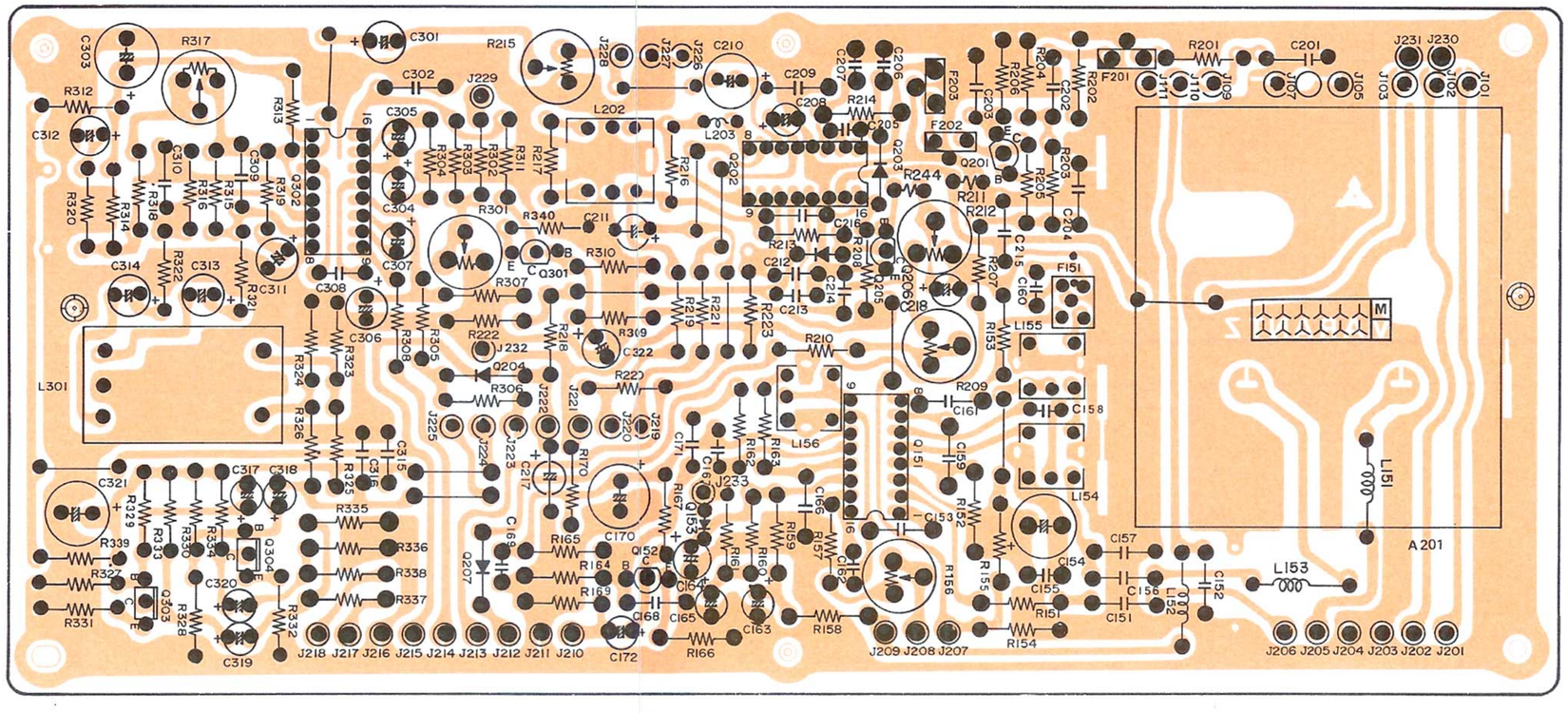

10.7 Main Amp. & Power Supply Assembly (P700) Schematic Diagram and Component Location

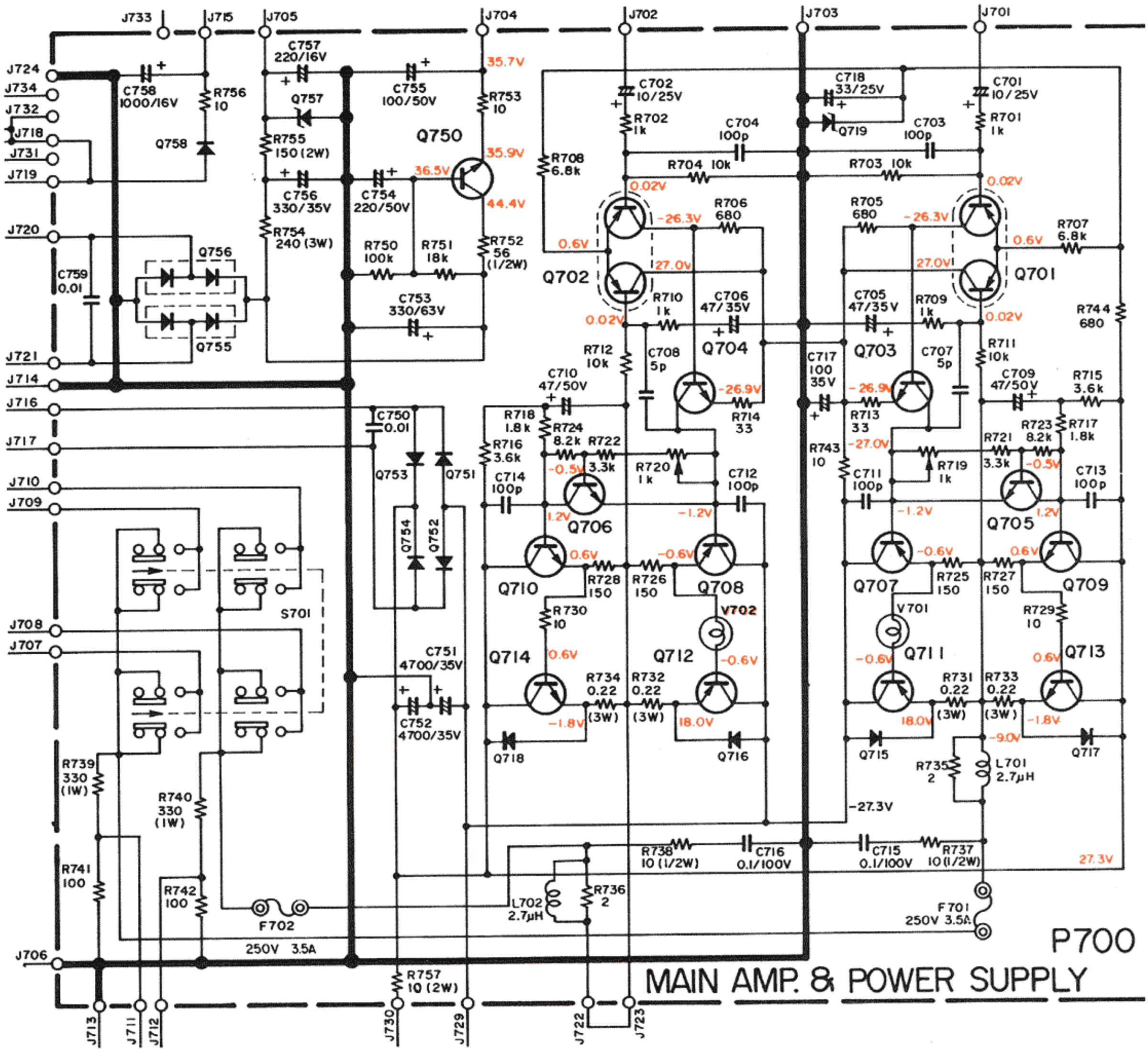

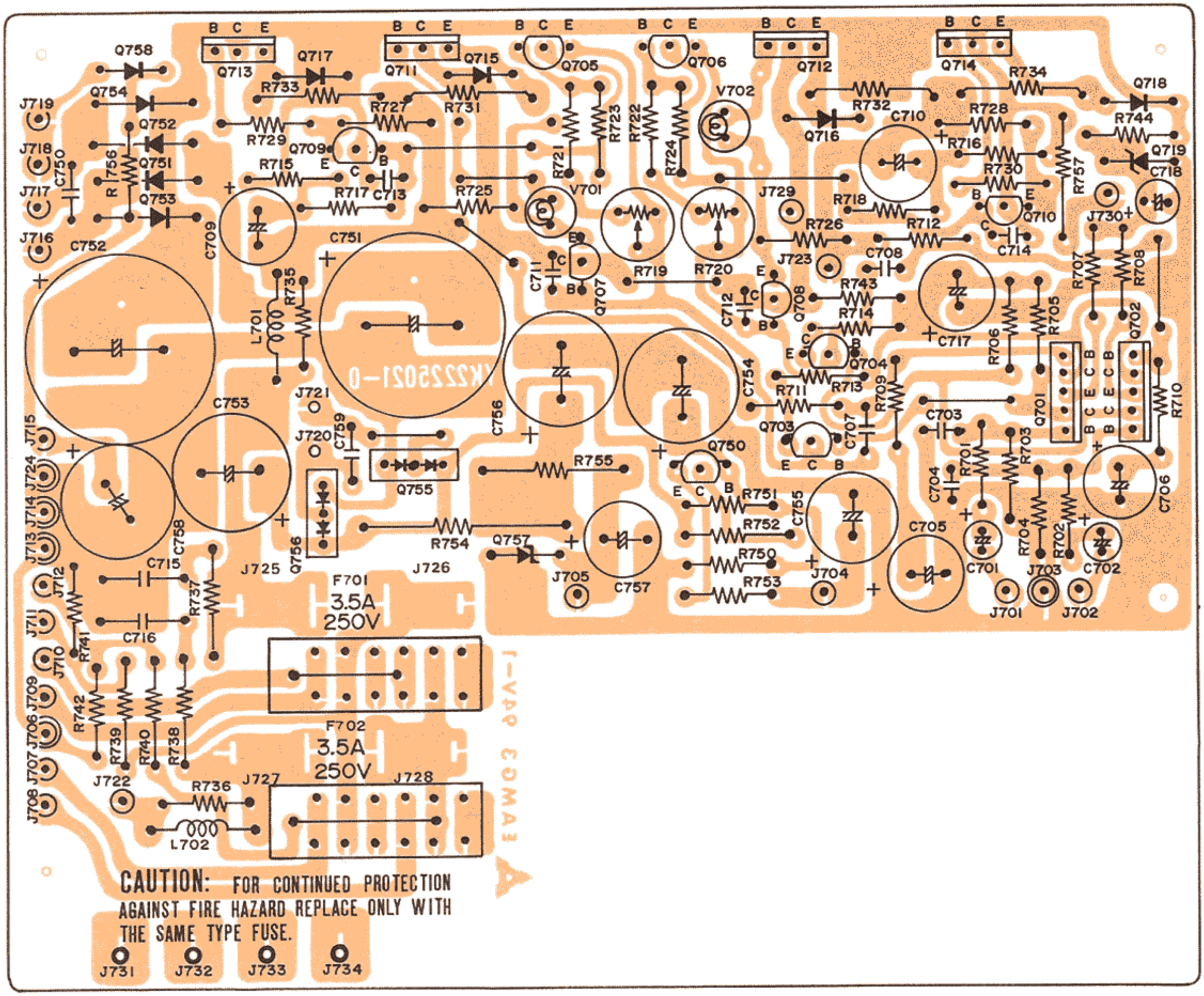
CAUTION: FOR CONTINUED PROTECTION AGAINST FIRE HAZARD REPLACE ONLY WITH THE SAME TYPE FUSE.
F701
3.5A
250V
F702
3.5A
250V
J731
J732
J733
J734

11. BLOCK DIAGRAM

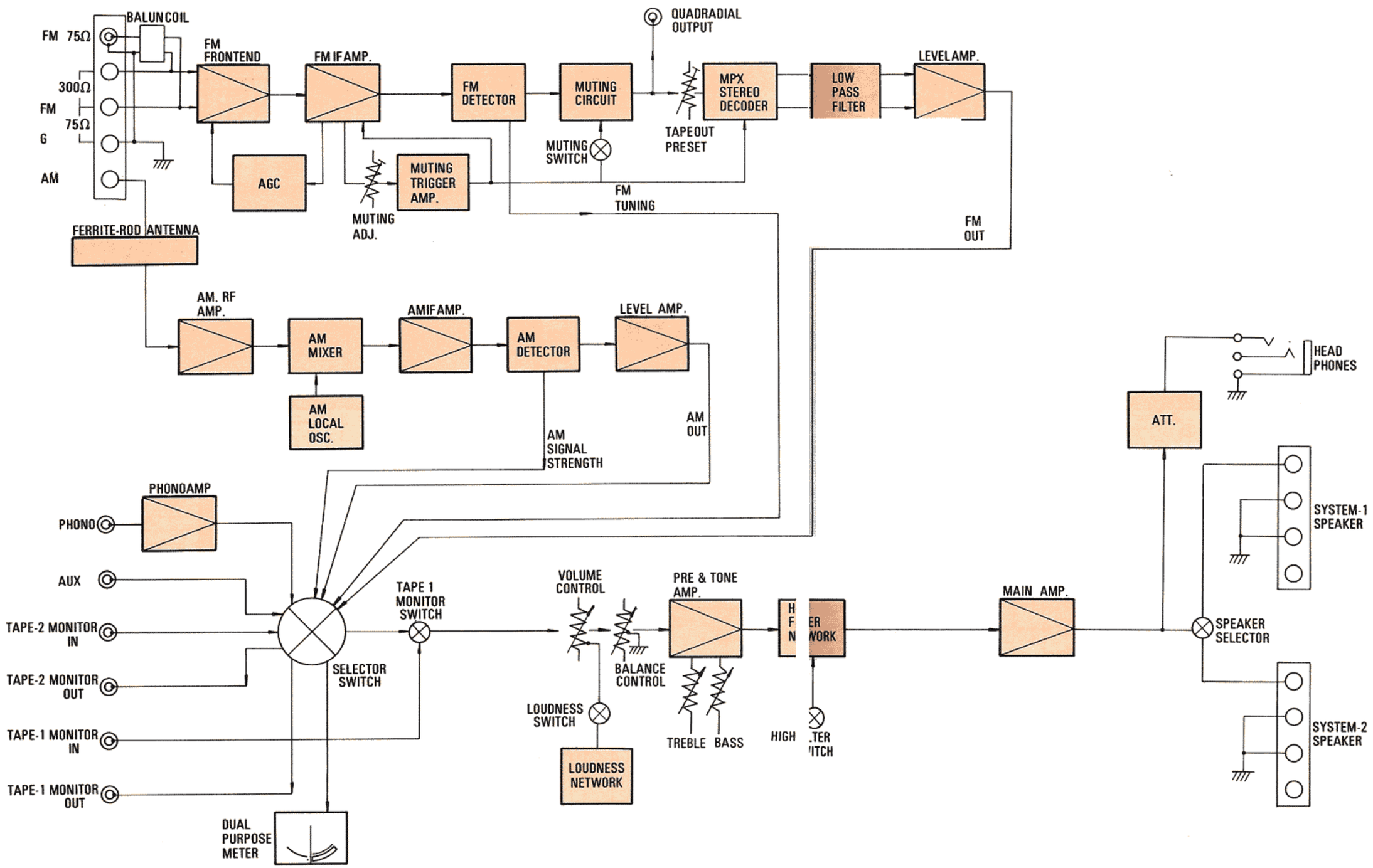

12. CONNECTION DIAGRAMS

12.1 For U.S.A. & Canadian Model

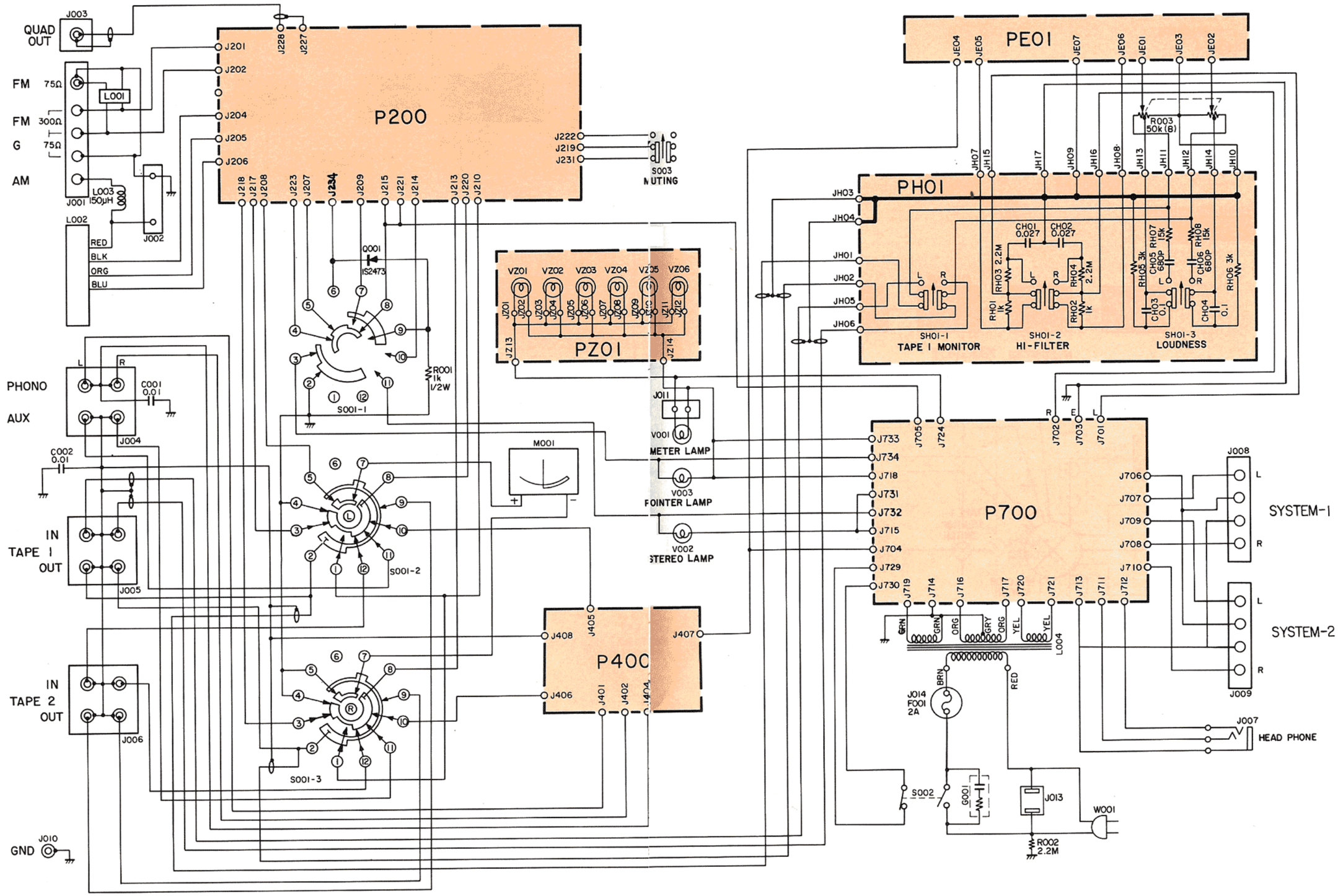

12.2 For European Model

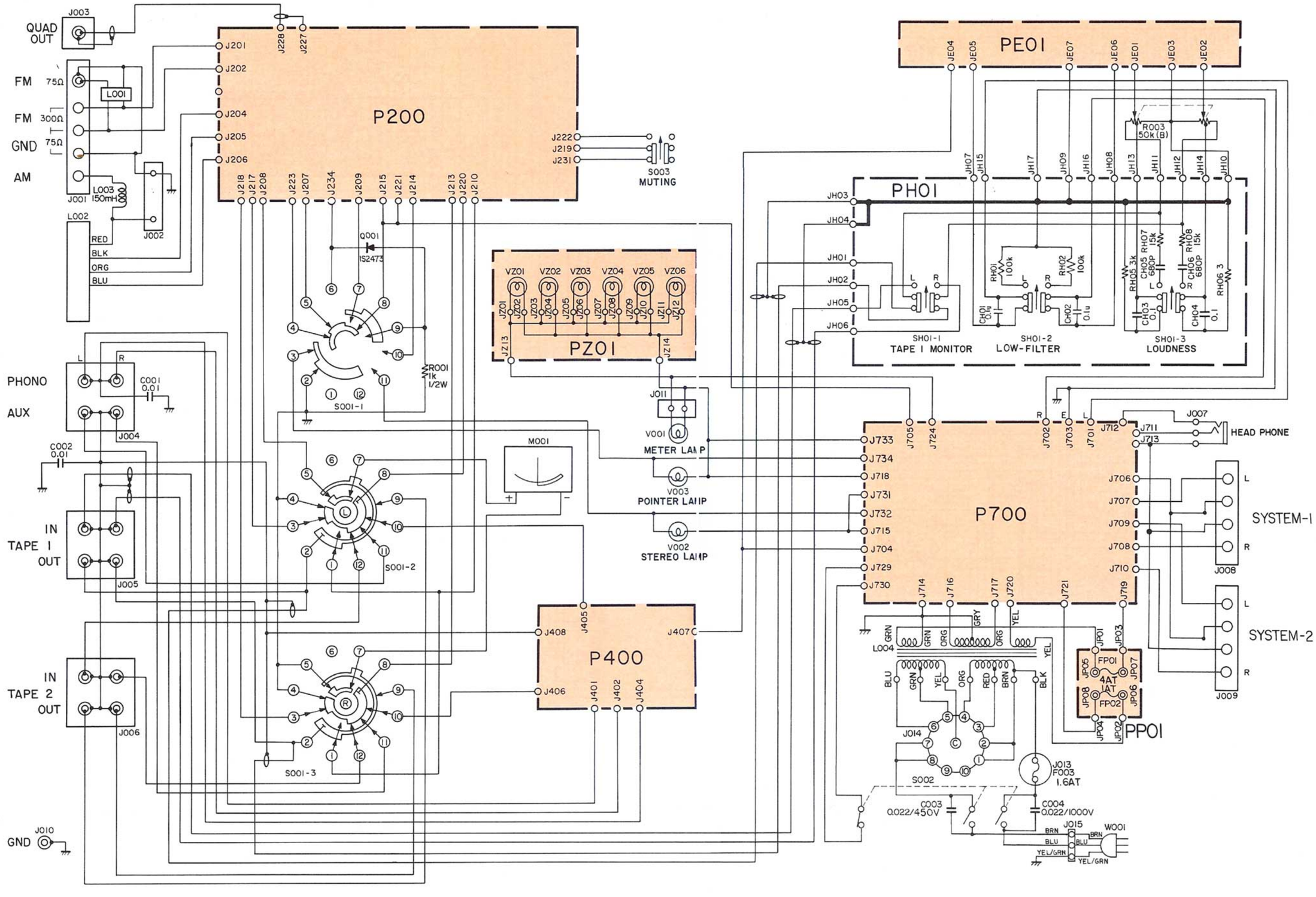

13. SCHEMATIC DIAGRAMS

13.1 For U.S.A. & Canadian Model

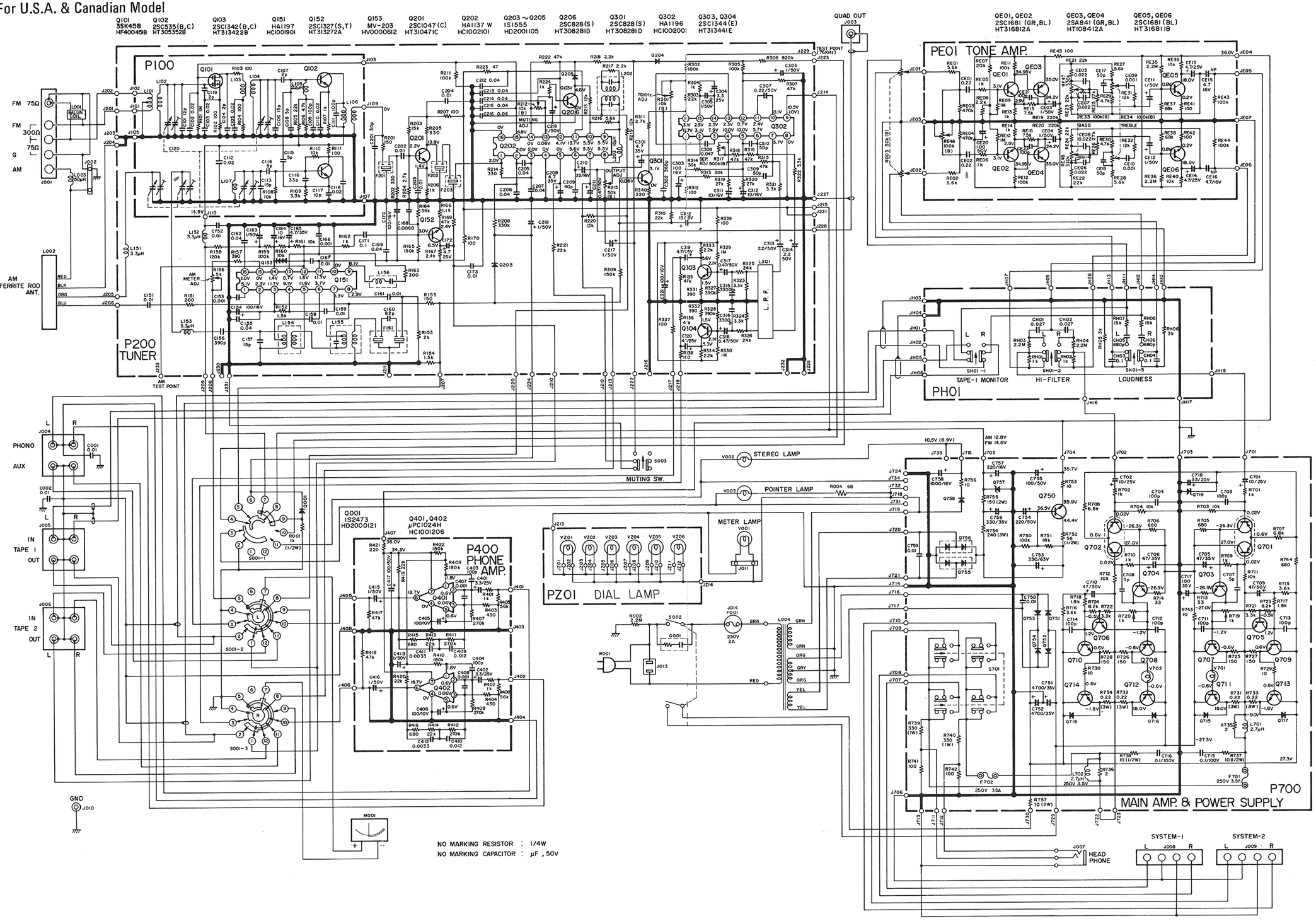

Q701, Q702 2SA798 (F,G) HT107982A
Q703, Q704 2SC1384 (R,S) HT313842C
Q705, Q706 2SC945 (Q) HT309451Q
Q707, Q708 2SA684 (Q,R) HK138419F
Q709, Q710 2SC1384 (Q,R) HK138419F
Q711, Q712 2SB507 (D,E) HK050719A
Q713, Q714 2SD313 (D,E) HK050719A
Q715～Q718 W06B HD2000501
Q719 WZ-177 HD3003009
Q750 2SC1384 (Q,R) HT313842B
Q751～Q754 S3V10 HD2000729
Q755, Q756 DS-133A HD2000803
Q757 BZ-140 HD3002109
Q758 W06B HD2000501

13.2 For European Model

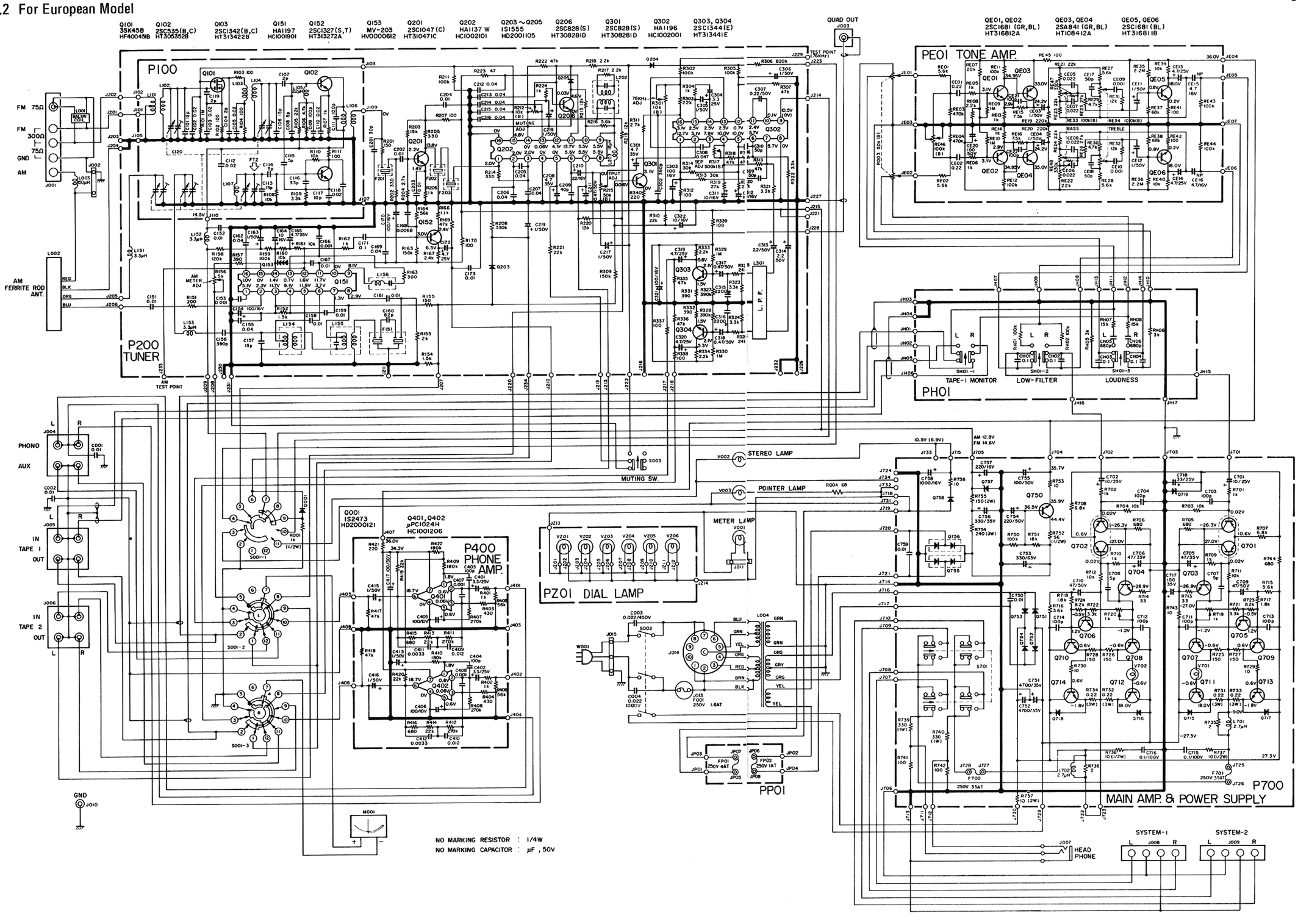

14. EXPLODED MECHANICAL DIAGRAMS

14.1 Cabinet

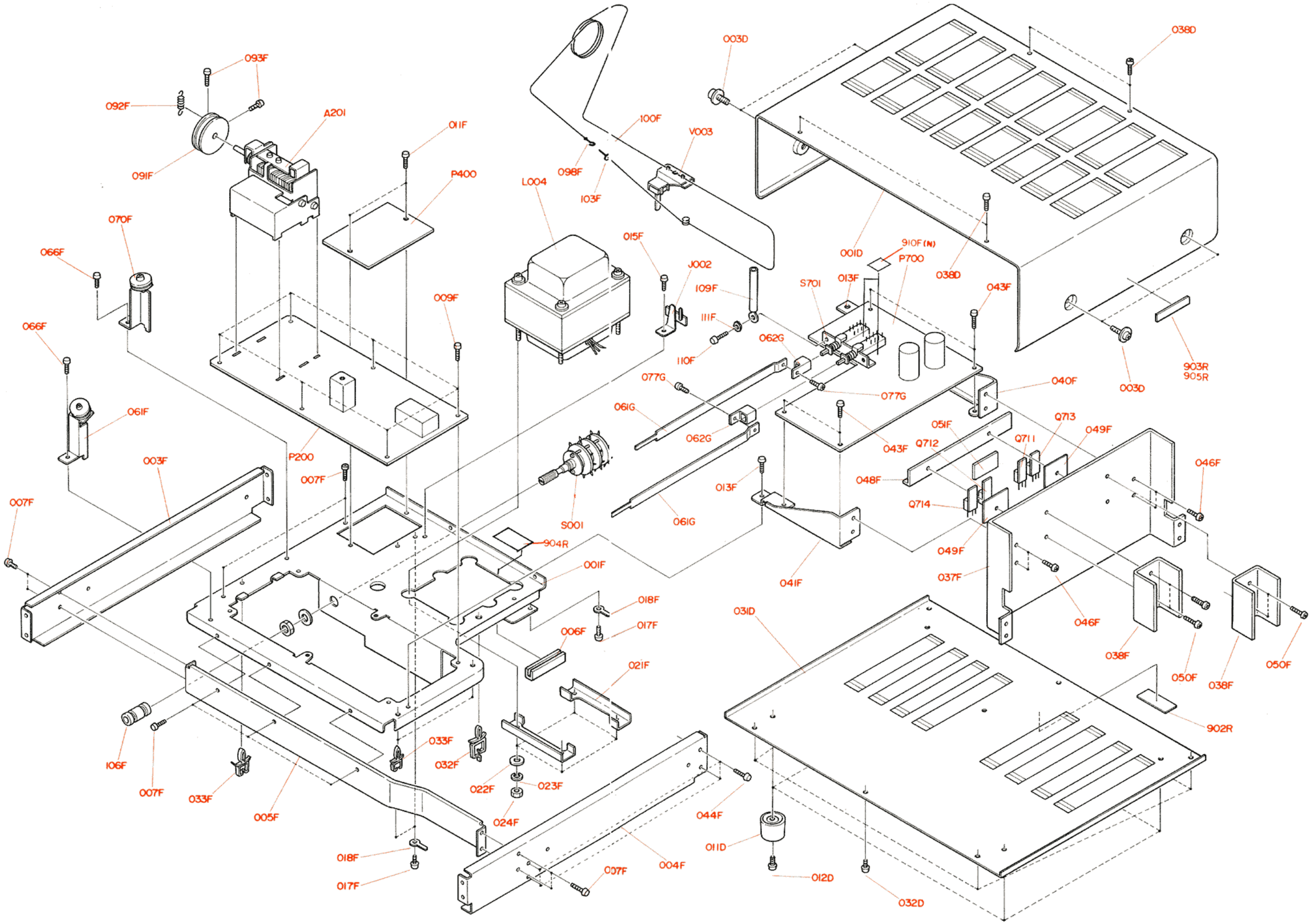

14.2 Chassis

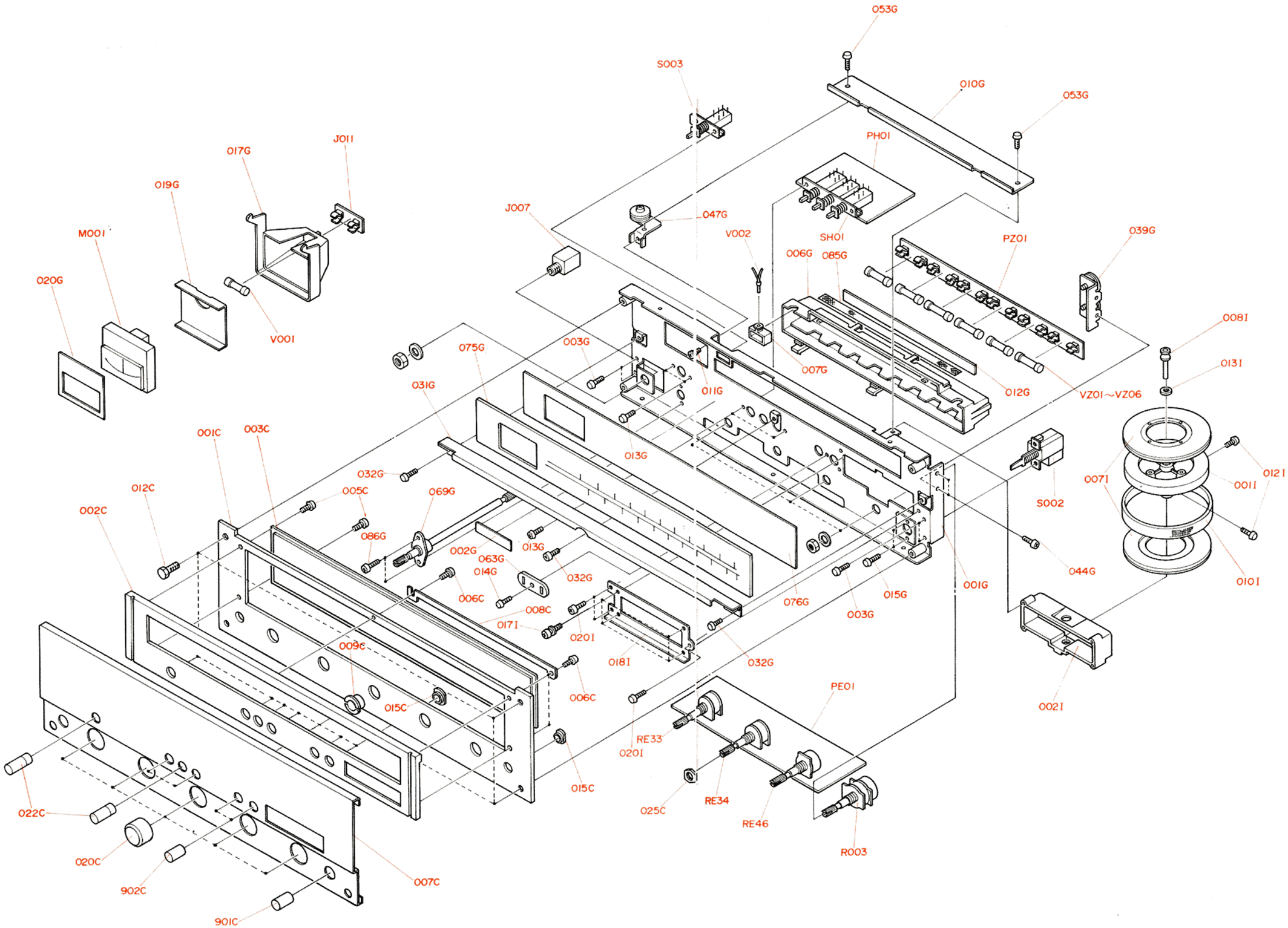
053G
S003
010G
053G
PH01
J011
017G
019G
J007
047G
M001
V002
SH01
PZ01
039G
006G
085G
020G
V001
008I
003G
075G
007G
013I
031G
011G
012G
VZ01~VZ06
001C
003C
013G
032G
012C
005C
069G
S002
007I
011
012I
002C
086G
002G
013G
063G
014G
032G
044G
010I
006C
008C
076G
015G
001G
003G
017I
020I
009C
018I
032G
006C
PE01
015C
002I
RE33
020I
015C
022C
025C
RE34
RE46
R003
020C
902C
007C
901C

14.3 Rear Panel for U.S.A. & Canadian Model

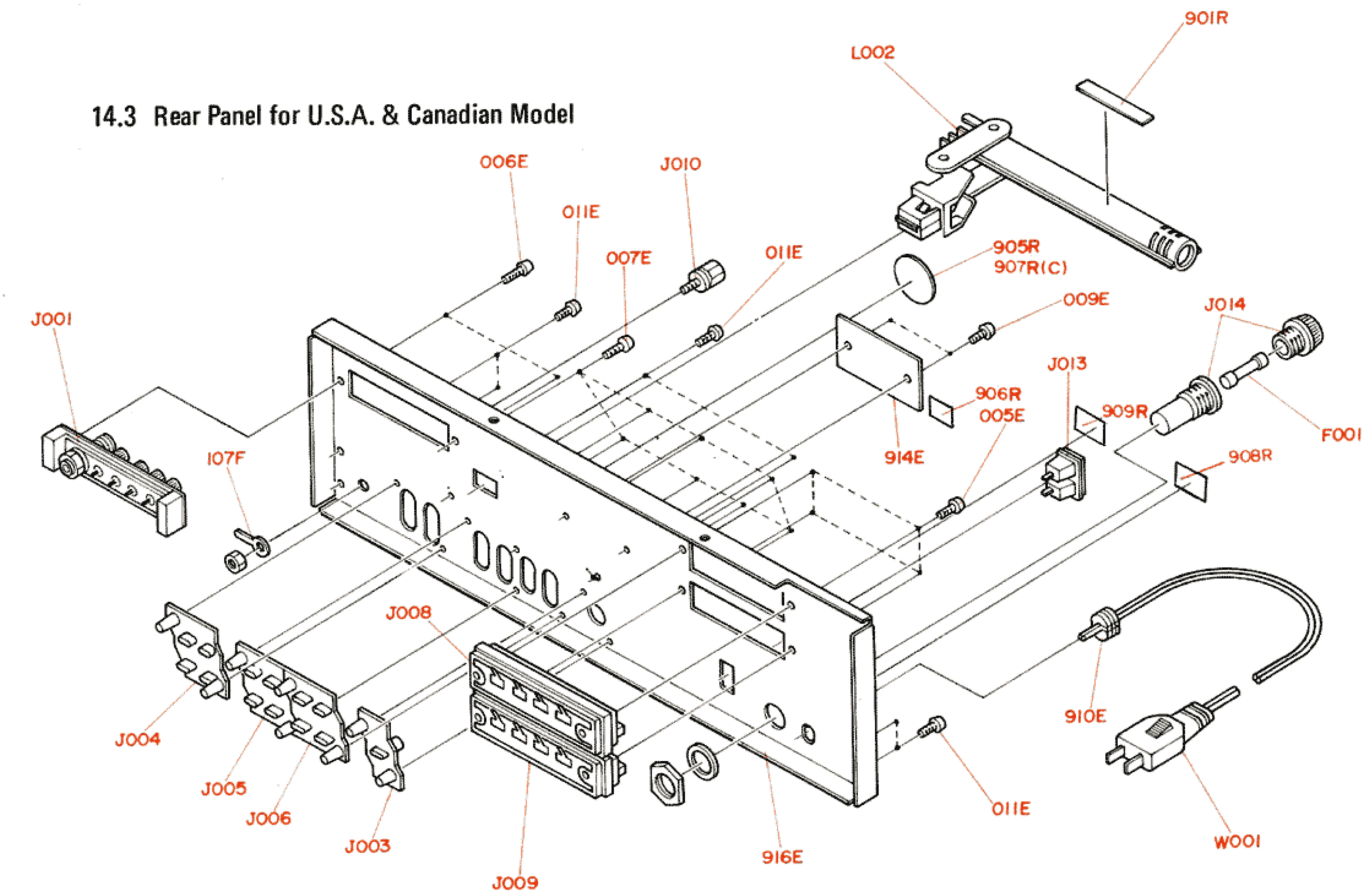

14.4 Rear Panel for European Model

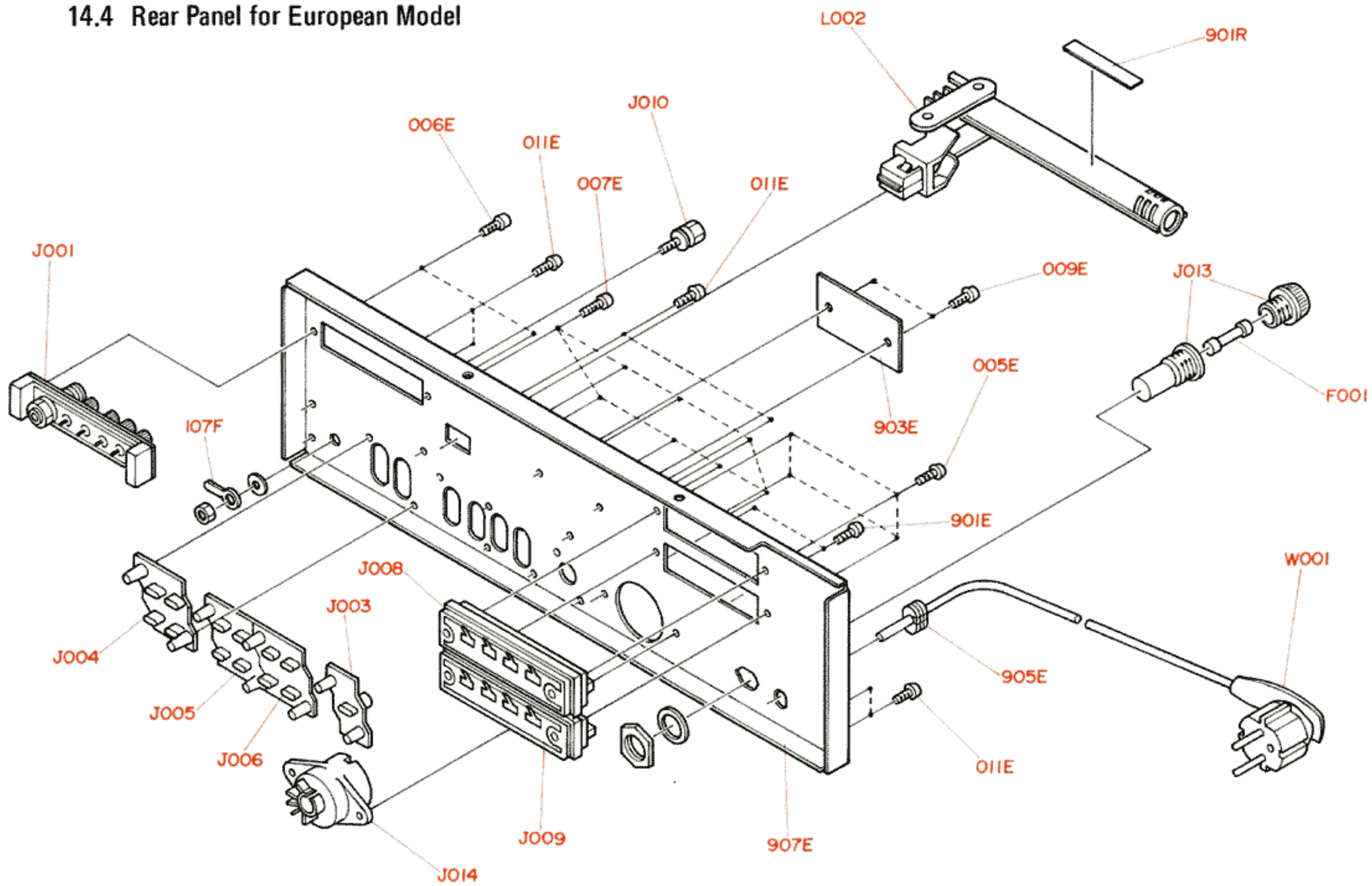

15. PACKING MATERIAL EXPLODED VIEW

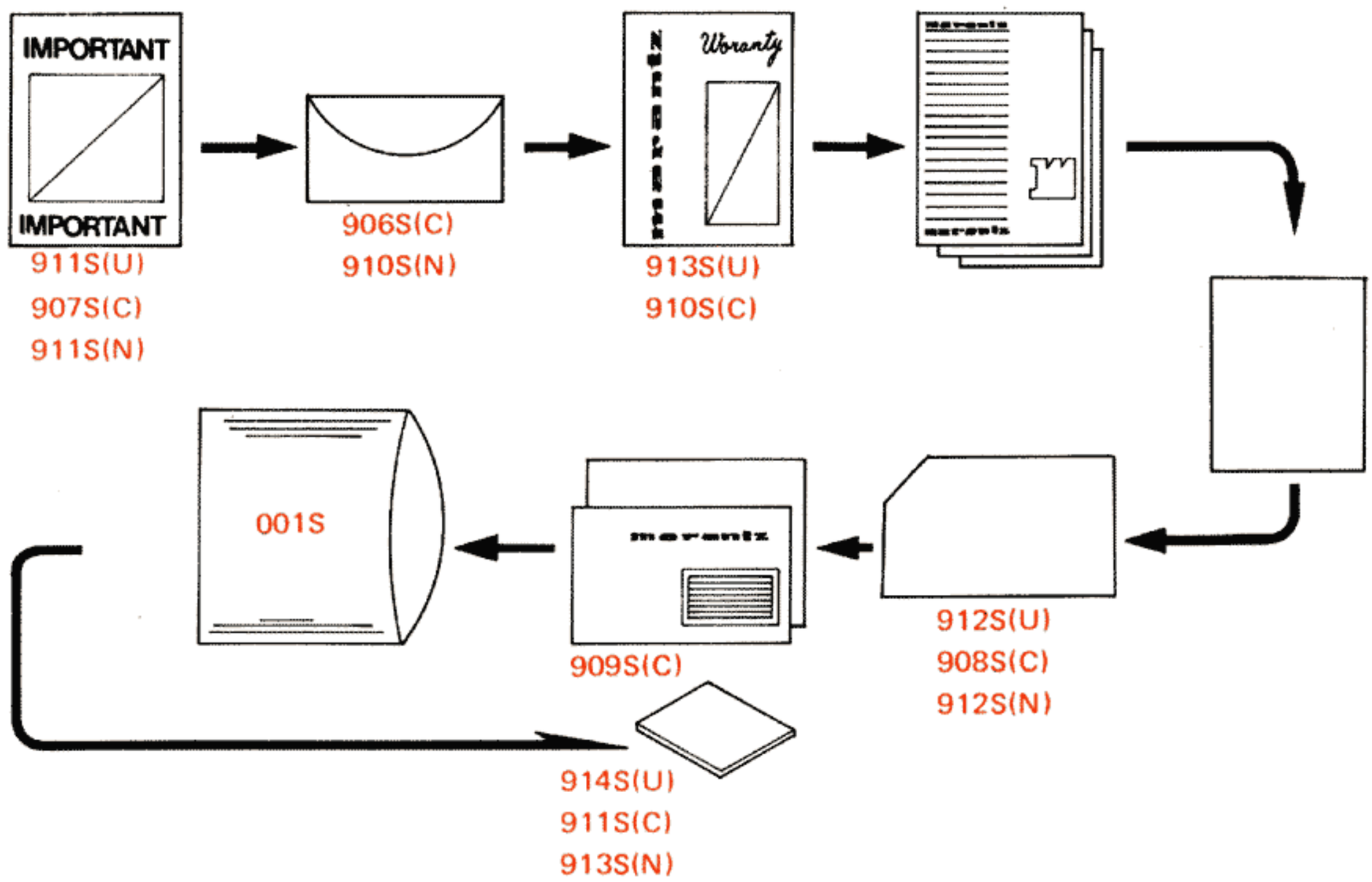

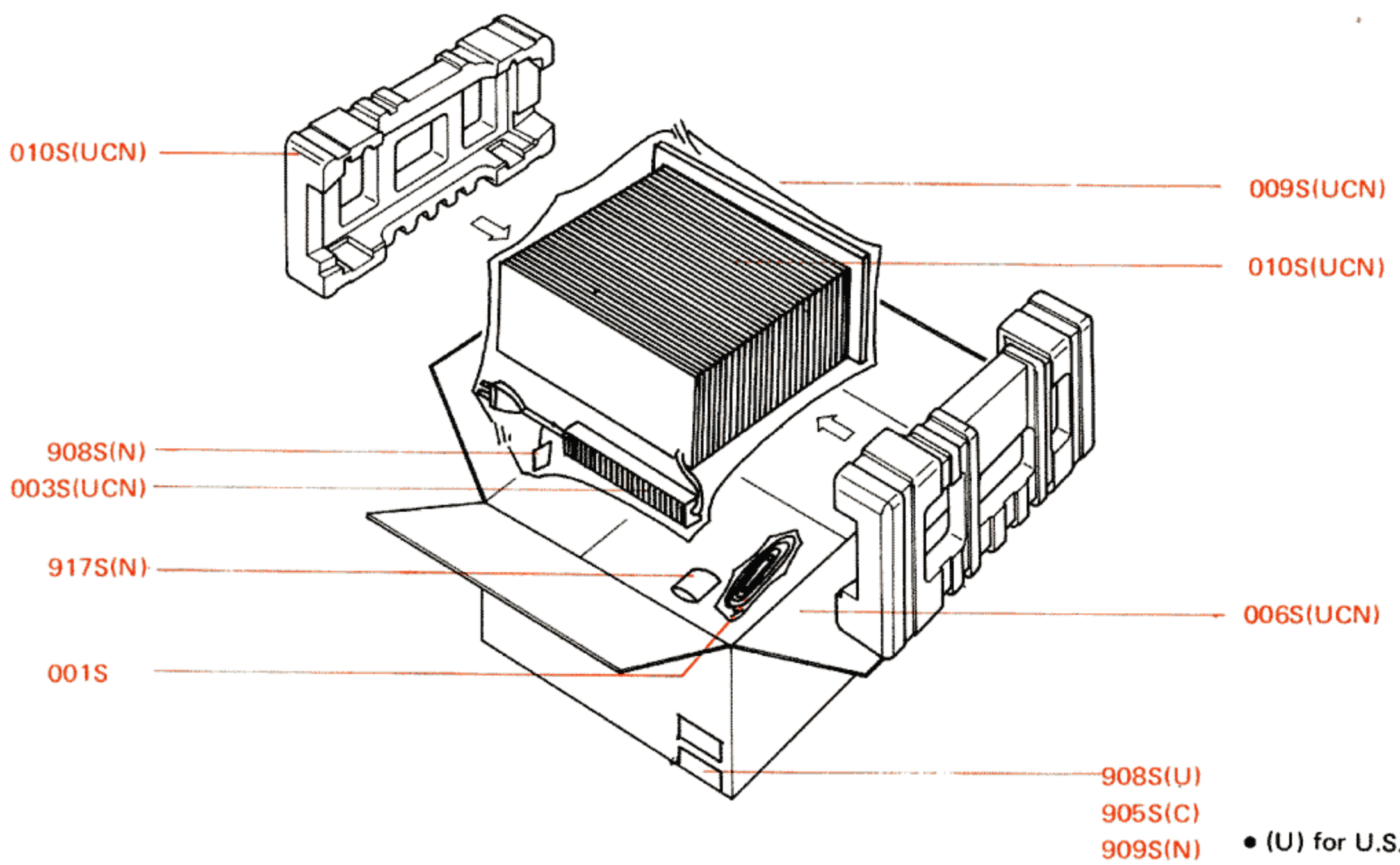

- (U) for U.S.A.
- (C) for Canada
- (E) for Europe

16. PARTS LIST

- (U) for U.S.A.
- (C) for Canada
- (N) for Europe

REF. DESIG.	Q'TY U	Q'TY C	Q'TY N	PART NO.	DESCRIPTION
A	1	1	1	2225063400	Front Panel Assembly
001C	1	1	1	2225063012	Escutcheon
002C	1	1	1	2225063022	Escutcheon
003C	1	1	1	2211158110	Window
005C	5	5	5	51100305A9	B.H.M. Screw, B3 x 5
007C	1	1	1	2225053012	Cover
015C	7	7	7	2978259012	Bushing
B	1	1	1	2219273410	Flywheel Assembly
001I	1	1	1	2219273010	Flywheel
007I	2	2	2	2219063030	Escutcheon
010I	1	1	1	2215353010	Ring
012I	2	2	2	51820206B0	P.H.M. Screw, P2 x 6
C	1	1	1	2219159410	Drum Assembly
091F	1	1	1	2219159010	Drum
092F	1	1	1	71101689L0	Spring
093F	2	2	2	51064019A9	P.H.M. Screw
D	1	1	1	1202006430	Hook Assembly
098F	1	1	1	1202258010	Hook
100F	2	2	2	72071605A0	String
PE08	2	2	2	2933118020	Spacer
PE12	2	2	2	75061251P0	Jumper
P208	12	12	12	2933118020	Spacer
P211	9	9	9	75061251P0	Jumper
P408	2	2	2	2933118020	Spacer
P707	28	28	28	3444118050	Spacer
P709	8	8	8	2933118010	Spacer
P711	2	2	2	75061001P0	Jumper
P712	3	3	3	75061251P0	Jumper
P713	1	1	1	75061501P0	Jumper
P714	2	2	2	75061751P0	Jumper
P715	1	1	1	75062001P0	Jumper
P757	8	8	8	3444118050	Spacer
P758	6	6	6	2933118020	Spacer
P759	8	8	8	2933118010	Spacer
P761	1	1	1	75061001P0	Jumper
001D	1	1	1	2225257010	Lid
001F	1	1	1	2225105013	Chassis
001G	1	1	1	2225160013	Bracket
001H	1	1	1	2991103500	Pointer
001S	1	1	1	9013025010	Polyethylene Bag
001V	1	1	1	ZA02000070	Ext. Antenna, FM
002G	1	1	1	2991861010	Label
002I	1	1	1	2213104500	Retainer
003D	4	4	4	51480406S9	F. Washer Screw, F4 x 6
003F	1	1	1	2225126010	Stay
003G	4	4	4	51280308B0	B.H. Tapped Screw, B3 x 8
003S	1	1	1	2864804010	Sleeve
004F	1	1	1	2225126020	Stay
005E	4	4	4	51280308U0	B.H. Tapped Screw, B3 x 8
005F	1	1	1	2225126032	Stay
006C	2	2	2	51100306S9	B.H.M. Screw, B3 x 6
006E	2	2	2	51280308U0	B.H. Tapped Screw, B3 x 8
006F	1	1	1	2225259010	Bushing
006G	1	1	1	2215274102	Reflector
006S	1	1	1	2225801010	Packing Case
007E	8	8	8	51280308U0	B.H. Tapped Screw, B3 x 8
007F	9	9	9	51280308B0	B.H. Tapped Screw, B3 x 8
007G	1	1	1	2211274303	Reflector
007S	2	2	2	2221803010	Partitioner
008C	1	1	1	2213160170	Bracket
008I	1	1	1	2219112010	Shaft
009C	1	1	1	2225055012	Collar
009E	2	2	2	51760306B0	OS Tapped Screw, O3 x 6
009F	6	6	6	51280308B0	B.H. Tapped Screw, B3 x 8
009S	1	1	1	9014538350	Polyethylene Bag
010G	1	1	1	2225051012	Guide
010S	1	1	1	2918107150	Sheet
011D	4	4	4	2932057010	Leg
011E	6	6	6	51280308U0	B.H. Tapped Screw, B3 x 8
011F	2	2	2	51280308B0	B.H. Tapped Screw, B3 x 8
011G	2	2	2	51042608A0	F.H.M. Screw, F2.6 x 8
012C	4	4	4	52017069J0	H. Head Bolt
012D	4	4	4	51570410S0	P. Tapped Screw, P4 x 10
012G	1	1	1	2225118010	Spacer
013F	2	2	2	51280308B0	B.H. Tapped Screw, B3 x 8
013G	4	4	4	51100306A9	B.H.M. Screw, B3 x 6
013I	1	1	1	59031405G9	Washer
014G	1	1	1	51280308B0	B.H. Tapped Screw, B3 x 8
015F	2	2	2	51280308B0	B.H. Tapped Screw, B3 x 8
015G	2	2	2	51100306A9	B.H.M. Screw, B3 x 6
017F	3	3	3	51280308B0	B.H. Tapped Screw, B3 x 8
017G	1	1	1	2225274203	Reflector
017I	4	4	4	51470306A9	L. Washer Screw, L3 x 6
018F	3	3	3	62030049W0	Lug
018I	1	1	1	2205160123	Bracket
019F	1	1	1	62030039W0	Lug
019G	1	1	1	2213053022	Cover
020C	5	5	5	2221154232	Knob
020F	1	1	1	62030039W0	Lug
020G	1	1	1	2991107022	Sheet
020I	3	3	3	51280306B0	B.H. Tapped Screw, B3 x 6
021F	2	2	2	2956160052	Bracket
022C	4	4	4	2205154030	Knob
022F	4	4	4	54020401A0	Flat Washer, P
023F	4	4	4	54040402A0	Spring Washer
024F	4	4	4	53110403A9	Hexagon Nut
025C	1	1	1	53118219G0	Hexagon Nut
031D	1	1	1	2225257022	Lid
031F	2	2	2	2886005060	Clamper
031G	1	1	1	2205269013	Protector
032D	7	7	7	51280408U0	B.H. Tapped Screw, B4 x 8
032F	1	1	1	2886005020	Clamper
032G	3	3	3	51280306B0	B.H. Tapped Screw, B3 x 6

- (U) for U.S.A.
- (C) for Canada
- (N) for Europe

REF. DESIG.	Q'TY U	Q'TY C	Q'TY N	PART NO.	DESCRIPTION
033F	1	1	1	2886005050	Clamper
037F	1	1	1	2225267012	Heatsink
038F	2	2	2	2225267020	Heatsink
039G	1	1	1	2205262510	Pulley
040F	1	1	1	2225160030	Bracket
041F	1	1	1	2225160040	Bracket
043F	4	4	4	51280308B0	B.H. Tapped Screw, B3 x 8
044F	4	4	4	51280308B0	B.H. Tapped Screw, B3 x 8
044G	2	2	2	51280308B0	B.H. Tapped Screw, B3 x 8
045F	2	2	2	51280308U0	B.H. Tapped Screw, B3 x 8
046F	4	4	4	51280308U0	B.H. Tapped Screw, B3 x 8
047G	1	1	1	2205262502	Pulley
048F	1	1	1	2956005010	Clamper
050F	2	2	2	51100312S0	B.H.M. Screw, B3 x 12
051F	1	1	1	3917118012	Spacer
053G	1	1	1	51280308B0	B.H. Tapped Screw, B3 x 8
054G	1	1	1	2927160050	Bracket
055G	1	1	1	51570306B0	P. Tapped Screw, P3 x 6
056G	1	1	1	2908259010	Bushing
061F	1	1	1	2225262500	Pulley
061G	2	2	2	2225112022	Shaft
062G	2	2	2	2891271013	Holder
063G	1	1	1	2205259010	Bushing
064G	1	1	1	51280308B0	B.H. Tapped Screw, B3 x 8
066F	2	2	2	51280308B0	B.H. Tapped Screw, B3 x 8
069G	1	1	1	2225112502	Shaft
070F	1	1	1	2205262530	Pulley
075G	1	1	1	2225302012	Dial
076G	1	1	1	2225107012	Sheet
077G	2	2	2	51100306A9	B.H.M. Screw, B3 x 6
085G	1	1	1	2219202050	Net
103F	1	1	1	56382540G0	Eyelet
106F	1	1	1	2963125010	Joint
107F	1	1	1	62040029W0	Lug
109F	1	1	1	2871005010	Clamper
110F	1	1	1	51100306A9	B.H.M. Screw, B3 x 6
111F	1	1	1	54050300R0	T.L. Washer, OR
135F	1	1	1	2991109010	Shield
136F	1	1	1	2991053112	Cover
901C	1	1		2963154022	Knob
901C			2	2970154012	Knob
901E			2	51100308S9	B.H.M. Screw, B3 x 8
901F			1	2854160030	Bracket
901R	1		1	2506265060	Indicator
901R		1		2911861170	Label
902C			1	2218154020	Knob
902C	2	2		2970154012	Knob
902F			2	51100306A0	B.H.M. Screw, B3 x 6
902R	1		1	2578861010	Label
902R		1		2911861112	Label
903E			1	2225265030	Indicator
903F			2	51280308B0	B.H. Tapped Screw, B3 x 8
903R	1		1	2932861010	Label
903R		1		9510601020	Label
904R		1		2225861010	Label
904R			1	2882861020	Label
904R	1			9510911020	Label

REF. DESIG.	Q'TY U	Q'TY C	Q'TY N	PART NO.	DESCRIPTION
905E			1	1455259050	Bushing
905R		1		2911861142	Label
905R	1			9511101020	Label
905S		3		9523015120	Serial No. Card
906F			2	51280314B0	B.H. Tapped Screw, B3 x 14
906R		1		9510911010	Label
906S		1		2918813012	Envelope
907E			1	2225160223	Bracket
907F			1	2213120010	Insulator
907S		1		2818851120	Instructions
908F			2	2970120030	Insulator
908R		1		2911861012	Label
908S	3			9522815010	Serial No. Card
908S			1	9560000042	Hang Tag
908S		1		9630000180	Guarantee Card
909R		1		2911861192	Label
909S			3	9523015110	Serial No. Card
909S		1		9650000050	S. Station Card
910E	1	1		1455259030	Bushing
910F			2	2225861020	Label
910R		1		2911861260	Label
910S			1	2818813010	Envelope
910S		1		2818854042	Guarantee Card
911S	1			2577851020	Instructions
911S			1	2818851120	Instructions
911S		1		2818854140	Guarantee Card
912S	1			2577854012	Guarantee Card
912S			1	9630000180	Guarantee Card
913S			1	2818851140	Instructions
913S	1			2818854023	Guarantee Card
914E	1			2225265012	Indicator
914E		1		2225265022	Indicator
914S	1			2818851040	Instructions
915S			1	2225851030	Instructions
916E	1	1		2225160210	Bracket
916S		1	1	2225851310	Instructions
917S	1			2225851010	Instructions
917S		1		2225851030	Instructions
917S			1	2731821010	Silicagel
918S	1			2225851020	Instructions
918S		1		2886851100	Instructions
CE01	1	1	1	DF17224050	Film Cap., 0.22μF ±20% 50V
CE02	1	1	1	DF17224050	Film Cap., 0.22μF ±20% 50V
CE03	1	1	1	EE10505010	Electrolytic Cap., 1μF ±20% 50V
CE04	1	1	1	EE10505010	Electrolytic Cap., 1μF ±20% 50V
CE05	1	1	1	DF16223050	Film Cap., 0.022μF ±10% 50V
CE06	1	1	1	DF16223050	Film Cap., 0.022μF ±10% 50V
CE07	1	1	1	DF16223050	Film Cap., 0.022μF ±10% 50V
CE08	1	1	1	DF16223050	Film Cap., 0.022μF ±10% 50V
CE09	1	1	1	DF16102050	Film Cap., 0.001μF ±10% 50V
CE10	1	1	1	DF16102050	Film Cap., 0.001μF ±10% 50V
CE11	1	1	1	EE10505010	Electrolytic Cap., 1μF ±20% 50V
CE12	1	1	1	EE10505010	Electrolytic Cap., 1μF ±20% 50V
CE13	1	1	1	EE47502510	Electrolytic Cap., 4.7μF ±20% 25V
CE14	1	1	1	EE47502510	Electrolytic Cap., 4.7μF ±20% 25V
CE15	1	1	1	EQ47501610	Electrolytic Cap., 4.7μF ±30% 16V

- (U) for U.S.A.
- (C) for Canada
- (N) for Europe

REF. DESIG.	Q'TY U	Q'TY C	Q'TY N	PART NO.	DESCRIPTION
CE16	1	1	1	EQ47501610	Electrolytic Cap., 4.7μF ±30% 16V
CE17	1	1	1	DD16500010	Ceramic Cap., 50pF ±10% 50V
CE18	1	1	1	DD16500010	Ceramic Cap., 50pF ±10% 50V
CE20	1	1	1	EA10705090	Electrolytic Cap., 100μF $^{+50}_{-10}$% 50V
CE21	1	1	1	DD16101010	Ceramic Cap., 100pF ±10% 50V
CE22	1	1	1	DD16101010	Ceramic Cap., 100pF ±10% 50V
JE01 ~ JE07	7	7	7	YP10001130	Plug
					PE01 TONE AMP. BALANCE BOARD
PE01	1	1	1	YK22250220	P.W. Board
	1	1	1	ZZ22250220	P.W. Board Assembly
QE01	1	1	1	HT316812A0	Transistor, 2SC1681 (GR, BL)
QE02	1	1	1	HT316812A0	Transistor, 2SC1681 (GR, BL)
QE03	1	1	1	HT108412A0	Transistor, 2SA841 (GR, BL)
QE04	1	1	1	HT108412A0	Transistor, 2SA841 (GR, BL)
QE05	1	1	1	HT316811B0	Transistor, 2SC1681 (BL)
QE06	1	1	1	HT316811B0	Transistor, 2SC1681 (BL)
RE01	1	1	1	RT05562140	Resistor, 5.6kΩ ±5% ¼W
RE02	1	1	1	RT05562140	Resistor, 5.6kΩ ±5% ¼W
RE03	1	1	1	RT05474140	Resistor, 470kΩ ±5% ¼W
RE04	1	1	1	RT05474140	Resistor, 470kΩ ±5% ¼W
RE05	1	1	1	RT05102140	Resistor, 1kΩ ±5% ¼W
RE06	1	1	1	RT05102140	Resistor, 1kΩ ±5% ¼W
RE07	1	1	1	RT05203140	Resistor, 20kΩ ±5% ¼W
RE08	1	1	1	RT05222140	Resistor, 2.2kΩ ±5% ¼W
RE09	1	1	1	RT05105140	Resistor, 1MΩ ±5% ¼W
RE10	1	1	1	RT05105140	Resistor, 1MΩ ±5% ¼W
RE11	1	1	1	RT05104140	Resistor, 100kΩ ±5% ¼W
RE12	1	1	1	RT05104140	Resistor, 100kΩ ±5% ¼W
RE13	1	1	1	RT05102140	Resistor, 1kΩ ±5% ¼W
RE14	1	1	1	RT05102140	Resistor, 1kΩ ±5% ¼W
RE15	1	1	1	RT05752140	Resistor, 7.5kΩ ±5% ¼W
RE16	1	1	1	RT05752140	Resistor, 7.5kΩ ±5% ¼W
RE19	1	1	1	RT05224140	Resistor, 220kΩ ±5% ¼W
RE20	1	1	1	RT05224140	Resistor, 220kΩ ±5% ¼W
RE21	1	1	1	RT05223140	Resistor, 22kΩ ±5% ¼W
RE22	1	1	1	RT05223140	Resistor, 22kΩ ±5% ¼W
RE23	1	1	1	RT05223140	Resistor, 22kΩ ±5% ¼W
RE24	1	1	1	RT05223140	Resistor, 22kΩ ±5% ¼W
RE25	1	1	1	RT05273140	Resistor, 27kΩ ±5% ¼W
RE26	1	1	1	RT05273140	Resistor, 27kΩ ±5% ¼W
RE27	1	1	1	RT05562140	Resistor, 5.6kΩ ±5% ¼W
RE28	1	1	1	RT05562140	Resistor, 5.6kΩ ±5% ¼W
RE29	1	1	1	RT05472140	Resistor, 4.7kΩ ±5% ¼W
RE30	1	1	1	RT05472140	Resistor, 4.7kΩ ±5% ¼W
RE31	1	1	1	RT05123140	Resistor, 12kΩ ±5% ¼W
RE32	1	1	1	RT05123140	Resistor, 12kΩ ±5% ¼W
RE33	1	1	1	RM01040150	Variable Resistor, 100kΩ (B)
RE34	1	1	1	RM01040150	Variable Resistor, 100kΩ (B)
RE35	1	1	1	RT05225140	Resistor, 2.2MΩ ±5% ¼W
RE36	1	1	1	RT05225140	Resistor, 2.2MΩ ±5% ¼W
RE37	1	1	1	RT05683140	Resistor, 68kΩ ±5% ¼W
RE38	1	1	1	RT05683140	Resistor, 68kΩ ±5% ¼W
RE39	1	1	1	RT05103140	Resistor, 10kΩ ±5% ¼W
RE40	1	1	1	RT05103140	Resistor, 10kΩ ±5% ¼W

REF. DESIG.	Q'TY U	Q'TY C	Q'TY N	PART NO.	DESCRIPTION
RE41	1	1	1	RT05101140	Resistor, 100Ω ±5% ¼W
RE42	1	1	1	RT05101140	Resistor, 100Ω ±5% ¼W
RE43	1	1	1	RT05104140	Resistor, 100kΩ ±5% ¼W
RE44	1	1	1	RT05104140	Resistor, 100kΩ ±5% ¼W
RE45	1	1	1	RT05101140	Resistor, 100Ω ±5% ¼W
RE46	1	1	1	RK01040160	Variable Resistor, 100kΩ (B)
CH01	1	1	1	DF16273050	Film Cap., 0.027μF ±10% 50V
CH02	1	1	1	DF16273050	Film Cap., 0.027μF ±10% 50V
CH03	1	1	1	DF16104010	Film Cap., 0.1μF ±10% 50V
CH04	1	1	1	DF16104010	Film Cap., 0.1μF ±10% 50V
CH05	1	1	1	DK16681010	Ceramic Cap., 680pF ±10% 50V
CH06	1	1	1	DK16681010	Ceramic Cap., 680pF ±10% 50V
JH01 ~ JH17	17	17	17	YP10001130	Plug
					PH01 FILTER BOARD
PH01	1	1	1	YK22250410	P.W. Board
	1	1	1	ZZ22250410	P.W. Board Assembly
RH01	1	1	1	RT05102140	Resistor, 1kΩ ±5% ¼W
RH02	1	1	1	RT05102140	Resistor, 1kΩ ±5% ¼W
RH03	1	1	1	RT05225140	Resistor, 2.2MΩ ±5% ¼W
RH04	1	1	1	RT05225140	Resistor, 2.2MΩ ±5% ¼W
RH05	1	1	1	RT05302140	Resistor, 3kΩ ±5% ¼W
RH06	1	1	1	RT05302140	Resistor, 3kΩ ±5% ¼W
RH07	1	1	1	RT05153140	Resistor, 15kΩ ±5% ¼W
RH08	1	1	1	RT05153140	Resistor, 15kΩ ±5% ¼W
SH01	1	1	1	SP02030020	Pushswitch
FP01			1	FS10400800	Fuse, 4AT (SEMKO)
FP02			1	FS10100800	Fuse, 1AT (SEMKO)
JP01 ~ JP04			4	YP10001130	Plug
JP05 ~ JP08			4	YJ08000200	Jack, Fuse Holder
					PP01 FUSE BOARD
PP01			1	YF22250020	P.W. Board
			1	ZZ22250020	P.W. Board Assembly
JZ01 ~ JZ12	12	12	12	YJ08000170	Jack, Lamp Holder
JZ13	1	1	1	YP10001130	Plug
JZ14	1	1	1	YP10001130	Plug
					PZ01 DIAL LAMP BOARD
PZ01	1	1	1	YF22250010	P.W. Board
	1	1	1	ZZ22250010	P.W. Board Assembly
VZ01	1	1	1	IN10080070	Lamp, 8V 200mA
VZ02	1	1	1	IN10080070	Lamp, 8V 200mA
VZ03	1	1	1	IN10080070	Lamp, 8V 200mA
VZ04	1	1	1	IN10080070	Lamp, 8V 200mA
VZ05	1	1	1	IN10080070	Lamp, 8V 200mA
VZ06	1	1	1	IN10080070	Lamp, 8V 200mA
C001	1	1	1	DK18103010	Ceramic Cap., 0.01μF ±20% 50V
C002	1	1	1	DK18103010	Ceramic Cap., 0.01μF ±20% 50V

- (U) for U.S.A.
- (C) for Canada
- (N) for Europe

REF. DESIG.	Q'TY U	Q'TY C	Q'TY N	PART NO.	DESCRIPTION
C003			1	DO07223510	Oil-Paper Cap., 0.022μF 450V
C004			1	DF17223800	Film Cap., 0.022μF 1000V
F001			1	FS10160800	Fuse, SEMKO 1.6AT
F001	1	1		FS10200060	Fuse, UL 250V 2A
G001	1			BF10400030	Cap.Comp., Spark Killer (UL)
G001		1		BF10400050	Cap.Comp., Spark Killer (CSA)
J001	1	1		BY04050010	Terminal, 4P 75Ω Ant.
J001			1	BY04050020	Terminal, 4P 75Ω Ant.
J002	1	1	1	YL01020080	Terminal, 2P
J003	1	1	1	YT02010130	Terminal, 1P Quad. Out
J004	1	1	1	YT02040140	Terminal, 4P Phono,Aux In
J005	1	1	1	YT02040140	Terminal, 4P Tape 1
J006	1	1	1	YT02040140	Terminal, 4P Tape 2
J007	1	1	1	YJ01001080	Jack, Headphones
J008	1	1	1	YT03040160	Terminal, SP. System-1
J009	1	1	1	YT03040160	Terminal, SP. System-2
J010	1	1	1	YT01010050	Terminal, Ground
J011	1	1	1	YJ08000250	Jack, Meter Lamp Holder
J013	1	1		YJ04000560	Jack, AC Outlet
J013			1	YJ08000220	Jack, Fuse Holder
J014			1	BY03110010	Plug, Voltage Selector
J014	1			YJ08000120	Jack, Fuse Holder
J014		1		YJ08000230	Jack, Fuse Holder
J015			1	YL09030010	Terminal, 3P
L001	1	1	1	LB30075260	Balun Coil
L002	1	1	1	LF11200520	Ant. Coil, AM
L003	1	1	1	LC11540040	Choke Coil, 150μH
L004	1	1		TS18603050	Power Transformer
L004			1	TS18603060	Power Transformer
M001	1	1	1	IM11055070	D.C. Meter, FM Tun., AM Sig. Meter
R001	1	1	1	GF05102120	Resistor, 1kΩ ±5% ½W
R002	1	1		RC10225120	Resistor, 2.2MΩ ±10% ½W
R003	1	1	1	RM05030740	Variable Resistor, 50kΩ (B) Vol. ¼
S001	1	1	1	SR06050170	Rotary Switch, Selector
S002	1	1		SP02010270	Pushswitch, Power (UL)
S002			1	SP04010250	Pushswitch, Power (SEMKO)
S003	1	1	1	SP02010090	Pushswitch, FM Muting
V001	1	1	1	IN10080430	Lamp, Meter 8V 300MA
V002	1	1	1	IN10080340	Lamp, Stereo 8V 60MA
W001			1	YC01900030	A.C.Power Cord
W001	1	1		YC02400220	A.C.Power Cord
C101	1	1	1	DD16120020	Ceramic Cap., 12pF ±10%
C102	1	1	1	DK18203030	Ceramic Cap., 0.02μF
C103	1	1	1	DK18203030	Ceramic Cap., 0.02μF
C104	1	1	1	DD11020010	Ceramic Cap., 2pF
C105	1	1	1	DK18203030	Ceramic Cap., 0.02μF
C106	1	1	1	DD16150040	Ceramic Cap., 15pF ±10%
C107	1	1	1	DD11020010	Ceramic Cap., 2pF
C108	1	1	1	DD12050010	Ceramic Cap., 5pF
C109	1	1	1	DD16101010	Ceramic Cap., 100pF ±10%
C110	1	1	1	DK18203030	Ceramic Cap., 0.02μF
C111	1	1	1	DD16101010	Ceramic Cap., 100pF ±10%
C112	1	1	1	DK18203030	Ceramic Cap., 0.02μF
C113	1	1	1	DD15150020	Ceramic Cap., 15pF ±5%
C114	1	1	1	DD10050030	Ceramic Cap., 5pF
C115	1	1	1	DD12050010	Ceramic Cap., 5pF
C116	1	1	1	DD16330020	Ceramic Cap., 33pF ±10%

REF. DESIG.	Q'TY U	Q'TY C	Q'TY N	PART NO.	DESCRIPTION
C117	1	1	1	DD12100060	Ceramic Cap., 10pF
C118	1	1	1	DK18203030	Ceramic Cap., 0.02μF
C119	1	1	1	DD11020010	Ceramic Cap., 2pF
C120	1	1	1	CA32400080	Variable Cap.,
C121	1	1	1	CT14200010	Trimming Cap.,
C151	1	1	1	DK17103010	Ceramic Cap., 0.01μF ±20%
C152	1	1	1	DK17103010	Ceramic Cap., 0.01μF ±20%
C153	1	1	1	DK17102010	Ceramic Cap., 0.001μF ±20%
C154	1	1	1	EA10701690	Electrolytic Cap., 100μF 16V
C155	1	1	1	DK18403020	Ceramic Cap., 0.04μF
C156	1	1	1	DF65391010	Film Cap., 390pF
C157	1	1	1	DD16150010	Ceramic Cap., 15pF ±10%
C158	1	1	1	DK18103010	Ceramic Cap., 0.01μF
C159	1	1	1	DK17103010	Ceramic Cap., 0.01μF ±20%
C160	1	1	1	DD16820010	Ceramic Cap., 82pF ±10%
C161	1	1	1	DK17103010	Ceramic Cap., 0.01μF ±20%
C162	1	1	1	DK18403020	Ceramic Cap., 0.04μF
C163	1	1	1	EA10505090	Electrolytic Cap., 1μF 50V
C164	1	1	1	EA10601690	Electrolytic Cap., 10μF 16V
C165	1	1	1	EA47503590	Electrolytic Cap., 4.7μF 35V
C166	1	1	1	DK17102010	Ceramic Cap., 0.001μF ±20%
C167	1	1	1	DK18103010	Ceramic Cap., 0.01μF
C168	1	1	1	DK16682010	Ceramic Cap.,0.0068μF ±10%
C169	1	1	1	DK18403020	Ceramic Cap., 0.04μF
C170	1	1	1	EA10701690	Electrolytic Cap., 100μF 16V
C171	1	1	1	DF16104010	Film Cap., 0.1μF ±10%
C172	1	1	1	EE47502510	Electrolytic Cap., 4.7μF 25V
F151	1	1	1	FF10045160	Ceramic Filter, AM 455kHz
J101	1	1	1	YP10001510	Plug
J102	1	1	1	YP10001510	Plug
J103	1	1	1	YP10001510	Plug
J105	1	1	1	YP10001510	Plug
J107	1	1	1	YP10001510	Plug
J109	1	1	1	YP10001510	Plug
J110	1	1	1	YP10001510	Plug
J111	1	1	1	YP10001510	Plug
L105	1	1	1	LC12220010	Choke Coil
L106	1	1	1	LI10239010	I.F.T.
L151	1	1	1	LC13320020	Choke Coil, 3.3μH
L152	1	1	1	LC13320020	Choke Coil, 3.3μF
L153	1	1	1	LC13320020	Choke Coil, 3.3μH
L154	1	1	1	LO10010480	Osc. Coil, AM
L155	1	1	1	LI10015010	I.F.T., AM
L156	1	1	1	LI10015060	I.F.T., AM
					P100 FM FRONT END BOARD
P100	1	1	1	YD29910010	P.W. Board
A201	1	1	1	AV01202060	FM Front End Assembly
Q101	1	1	1	HF400451B0	F.E.T., 3SK45 B
Q102	1	1	1	HT305352B0	Transistor, 2SC535 (B, C)
Q103	1	1	1	HT313422B0	Transistor, 2SC1342 (B, C)
Q151	1	1	1	HC10019010	IC, HA1197
Q152	1	1	1	HT313272A0	Transistor, 2SC1327 (S, T)
Q153	1	1	1	HV00006120	Varistor, MV-203
R101	1	1	1	GD05105140	Resistor, 1MΩ ±5% ¼W
R102	1	1	1	GD05101140	Resistor, 100Ω ±5% ¼W
R103	1	1	1	GD05101140	Resistor, 100Ω ±5% ¼W

- (U) for U.S.A.
- (C) for Canada
- (N) for Europe

REF. DESIG.	Q'TY U	Q'TY C	Q'TY N	PART NO.	DESCRIPTION
R104	1	1	1	GD05101140	Resistor, 100Ω ±5% ¼W
R105	1	1	1	GD05223140	Resistor, 22kΩ ±5% ¼W
R106	1	1	1	GD05472140	Resistor, 4.7kΩ ±5% ¼W
R107	1	1	1	GD05102140	Resistor, 1kΩ ±5% ¼W
R108	1	1	1	GD05103140	Resistor, 10kΩ ±5% ¼W
R109	1	1	1	GD05332140	Resistor, 3.3kΩ ±5% ¼W
R110	1	1	1	GD05103140	Resistor, 10kΩ ±5% ¼W
R111	1	1	1	GD05101140	Resistor, 100Ω ±5% ¼W
R151	1	1	1	RT05201140	Resistor, 200Ω ±5% ¼W
R152	1	1	1	RT05152140	Resistor, 1.5kΩ ±5% ¼W
R153	1	1	1	RT05202140	Resistor, 2kΩ ±5% ¼W
R154	1	1	1	RT05152140	Resistor, 1.5kΩ ±5% ¼W
R155	1	1	1	RT05151140	Resistor, 150Ω ±5% ¼W
R156	1	1	1	RA05020200	Trimming Resistor, 5kΩ
R157	1	1	1	RT05391140	Resistor, 390Ω ±5% ¼W
R158	1	1	1	RT05124140	Resistor, 120kΩ ±5% ¼W
R159	1	1	1	RT05104140	Resistor, 100kΩ ±5% ¼W
R160	1	1	1	RT05103140	Resistor, 10kΩ ±5% ¼W
R161	1	1	1	RT05103140	Resistor, 10kΩ ±5% ¼W
R162	1	1	1	RT05102140	Resistor, 1kΩ ±5% ¼W
R163	1	1	1	RT05301140	Resistor, 300Ω ±5% ¼W
R164	1	1	1	RT05473140	Resistor, 47kΩ ±5% ¼W
R165	1	1	1	RT05104140	Resistor 100kΩ ±5% ¼W
R166	1	1	1	RT05152140	Resistor, 1.5kΩ ±5% ¼W
R167	1	1	1	RT05242140	Resistor, 2.4kΩ ±5% ¼W
R169	1	1	1	RT05473140	Resistor, 47kΩ ±5% ¼W
R170	1	1	1	RT05101140	Resistor, 100Ω ±5% ¼W
A201	1	1	1	AV01202060	V.H.F. Tuner, FM Front End
C201	1	1	1	DD15300010	Ceramic Cap., 30pF ±5%
C202	1	1	1	DK17103010	Ceramic Cap., 0.01μF ±20%
C203	1	1	1	DK17103010	Ceramic Cap., 0.01μF ±20%
C204	1	1	1	DK17103010	Ceramic Cap., 0.01μF ±20%
C205	1	1	1	DK18403020	Ceramic Cap., 0.04μF
C206	1	1	1	DK18403020	Ceramic Cap., 0.04μF
C207	1	1	1	DK18403020	Ceramic Cap., 0.04μF
C208	1	1	1	EA47503590	Electrolytic Cap., 4.7μF 35V
C209	1	1	1	DD15400040	Ceramic Cap., 40pF ±5%
C210	1	1	1	EA22601690	Electrolytic Cap., 22μF 16V
C211	1	1	1	EA47405010	Electrolytic Cap., 0.47μF 50V
C212	1	1	1	DK18403010	Ceramic Cap., 0.04μF
C213	1	1	1	DK18403010	Ceramic Cap., 0.04μF
C214	1	1	1	DK18403010	Ceramic Cap., 0.04μF
C215	1	1	1	DK18403010	Ceramic Cap., 0.04μF
C216	1	1	1	DK18403010	Ceramic Cap., 0.04μF
C217	1	1	1	EA10505090	Electrolytic Cap., 1μF 50V
C218	1	1	1	EA10505090	Electrolytic Cap., 1μF 50V
F201	1	1	1	FF11070050	Ceramic Filter, FM 10.7MHz
F202	1	1	1	FF11070050	Ceramic Filter, FM 10.7MHz
F203	1	1	1	FF11070050	Ceramic Filter, FM 10.7MHz
J201	1	1	1	YP10001130	Plug
J202	1	1	1	YP10001130	Plug
J204 ~ J210	7	7	7	YP10001130	Plug
J213	1	1	1	YP10001130	Plug
J214	1	1	1	YP10001130	Plug
J215	1	1	1	YP10001130	Plug
J217 ~ J223	7	7	7	YP10001130	Plug
J227	1	1	1	YP10001130	Plug
J228	1	1	1	YP10001130	Plug
J229	1	1	1	YP10001130	Plug, Test Point (76kHz)
J231	1	1	1	YP10001130	Plug
J233	1	1	1	YP10001130	Plug
L202	1	1	1	LI14019010	I.F.T., FM
L203	1	1	1	LC11830010	Choke Coil, 18μH
					P200 TUNER BOARD
P200	1	1	1	YD22042012	P.W. Board
	1	1		ZZ22252010	P.W. Board Assembly
			1	ZZ22258010	P.W. Board Assembly
Q201	1	1	1	HT310471C0	Transistor, 2SC1047 C
Q202	1	1	1	HC10021010	IC, HA1137W
Q203	1	1	1	HD20011050	Diode, 1S1555
Q204	1	1	1	HD20011050	Diode, 1S1555
Q205	1	1	1	HD20011050	Diode, 1S1555
Q206	1	1	1	HT308281D0	Transistor, 2SC828 S
R201	1	1	1	RT05151140	Resistor, 150Ω ±5% ¼W
R202	1	1	1	RT05331140	Resistor, 330Ω ±5% ¼W
R203	1	1	1	RT05153140	Resistor, 15kΩ ±5% ¼W
R204	1	1	1	RT05202140	Resistor, 2kΩ ±5% ¼W
R205	1	1	1	RT05331140	Resistor, 330Ω ±5% ¼W
R206	1	1	1	RT05102140	Resistor, 1kΩ ±5% ¼W
R207	1	1	1	RT05101140	Resistor, 100Ω ±5% ¼W
R208	1	1	1	RT05334140	Resistor, 330kΩ ±5% ¼W
R211	1	1	1	RT05104140	Resistor, 100kΩ ±5% ¼W
R212	1	1	1	RA01030250	Trimming Resistor, 10kΩ B
R213	1	1	1	RT05123140	Resistor, 12kΩ ±5% ¼W
R214	1	1	1	RT05331140	Resistor, 330Ω ±5% ¼W
R215	1	1	1	RA05030120	Trimming Resistor, 50kΩ B
R216	1	1	1	RT05562140	Resistor, 5.6kΩ ±5% ¼W
R217	1	1	1	RT05222140	Resistor, 2.2kΩ ±5% ¼W
R218	1	1	1	RT05222140	Resistor, 2.2kΩ ±5% ¼W
R219	1	1	1	RT05123140	Resistor, 12kΩ ±5% ¼W
R220	1	1	1	RT05152140	Resistor, 15kΩ ±5% ¼W
R221	1	1	1	RT05223140	Resistor, 22kΩ ±5% ¼W
R222	1	1	1	RT05473140	Resistor, 47kΩ ±5% ¼W
R223	1	1	1	RT05470140	Resistor, 47Ω ±5% ¼W
R224	1	1	1	RT05102140	Resistor, 1kΩ ±5% ¼W
C301	1	1	1	EA47503590	Electrolytic Cap., 4.7μF 35V
C302	1	1	1	DF65361500	Film Cap., 360pF ±5%
C303	1	1	1	EA10701690	Electrolytic Cap., 100μF 16V
C304	1	1	1	EE33502510	Electrolytic Cap., 3.3μF 25V
C305	1	1	1	EE10505010	Electrolytic Cap., 1μF 50V
C306	1	1	1	EA10505090	Electrolytic Cap., 1μF 50V
C307	1	1	1	EQ22405010	Electrolytic Cap., 0.22μF 50V
C308	1	1	1	DF17473010	Film Cap., 0.047μF ±20%
C309	1	1	1	DD15500050	Ceramic Cap., 50pF ±5%
C310	1	1	1	DD15500050	Ceramic Cap., 50pF ±5%
C311	1	1	1	EA10601690	Electrolytic Cap., 10μF 16V
C312	1	1	1	EA10601690	Electrolytic Cap., 10μF 16V
C313	1	1	1	EA22505090	Electrolytic Cap., 2.2μF 50V
C314	1	1	1	EA22505090	Electrolytic Cap., 2.2μF 50V

- (U) for U.S.A.
- (C) for Canada
- (N) for Europe

REF. DESIG.	Q'TY U	Q'TY C	Q'TY N	PART NO.	DESCRIPTION
C315			1	DF15222050	Film Cap., 2200pF ±5% 50V
C315	1	1		DF15332050	Film Cap., 3300pF ±5% 50V
C316			1	DF15222050	Film Cap., 2200pF ±5% 50V
C316	1	1		DF15332050	Film Cap., 3300pF ±5% 50V
C317	1	1	1	EA47405010	Electrolytic Cap., 0.47μF 50V
C318	1	1	1	EA47405010	Electrolytic Cap., 0.47μF 50V
C319	1	1	1	EE47502510	Electrolytic Cap., 4.7μF 25V
C320	1	1	1	EE47502510	Electrolytic Cap., 4.7μF 25V
C321	1	1	1	EA10701690	Electrolytic Cap., 100μF 16V
C322	1	1	1	EE10601610	Electrolytic Cap., 10μF 16V
L301	1	1	1	LS35025010	M.P.X. Coil
Q301	1	1	1	HT308281D0	Transistor, 2SC828 S
Q302	1	1	1	HC10020010	IC, HA1196
Q303	1	1	1	HT313441E0	Transistor, 2SC1344 E
Q304	1	1	1	HT313441E0	Transistor, 2SC1344 E
R301	1	1	1	RA01030310	Trimming Resistor, 10kΩ B
R302	1	1	1	RT05104140	Resistor, 100kΩ ±5% ¼W
R303	1	1	1	RT05223140	Resistor, 22kΩ ±5% ¼W
R304	1	1	1	RT05102140	Resistor, 1kΩ ±5% ¼W
R305	1	1	1	RT05104140	Resistor, 100kΩ ±5% ¼W
R306	1	1	1	RT05824140	Resistor 820kΩ ±5% ¼W
R307	1	1	1	RT05473140	Resistor, 47kΩ ±5% ¼W
R309	1	1	1	RT05154140	Resistor, 150kΩ ±5% ¼W
R310	1	1	1	RT05223140	Resistor, 22kΩ ±5% ¼W
R311	1	1	1	RT05272140	Resistor, 2.7kΩ ±5% ¼W
R312	1	1	1	RT05101140	Resistor, 100Ω ±5% ¼W
R313	1	1	1	RT05303140	Resistor, 30kΩ ±5% ¼W
R314	1	1	1	RT05303140	Resistor, 30kΩ ±5% ¼W
R315	1	1	1	RT05473140	Resistor, 47kΩ ±5% ¼W
R316	1	1	1	RT05473140	Resistor, 47kΩ ±5% ¼W
R317	1	1	1	RA05040080	Trimming Resistor, 500kΩ B
R318	1	1	1	RT05473140	Resistor, 47kΩ ±5% ¼W
R319	1	1	1	RT05273140	Resistor, 27kΩ ±5% ¼W
R320	1	1	1	RT05273140	Resistor, 27kΩ ±5% ¼W
R321	1	1	1	RT05332140	Resistor, 3.3kΩ ±5% ¼W
R322	1	1	1	RT05332140	Resistor, 3.3kΩ ±5% ¼W
R323	1	1	1	RT05332140	Resistor, 3.3kΩ ±5% ¼W
R324	1	1	1	RT05332140	Resistor, 3.3kΩ ±5% ¼W
R325	1	1	1	RT05243140	Resistor, 24kΩ ±5% ¼W
R326	1	1	1	RT05243140	Resistor, 24kΩ ±5% ¼W
R327	1	1	1	RT05394140	Resistor, 390kΩ ±5% ¼W
R328	1	1	1	RT05394140	Resistor, 390kΩ ±5% ¼W
R329	1	1	1	RT05105140	Resistor, 1MΩ ±5% ¼W
R330	1	1	1	RT05105140	Resistor, 1MΩ ±5% ¼W
R331	1	1	1	RT05391140	Resistor, 390Ω ±5% ¼W
R332	1	1	1	RT05391140	Resistor, 390Ω ±5% ¼W
R333	1	1	1	RT05222140	Resistor, 2.2kΩ ±5% ¼W
R334	1	1	1	RT05222140	Resistor, 2.2kΩ ±5% ¼W
R335	1	1	1	RT05473140	Resistor, 47kΩ ±5% ¼W
R336	1	1	1	RT05473140	Resistor, 47kΩ ±5% ¼W
R337	1	1	1	RT05101140	Resistor, 100Ω ±5% ¼W
R338	1	1	1	RT05101140	Resistor, 100Ω ±5% ¼W
R339	1	1	1	RT05101140	Resistor, 100Ω ±5% ¼W
R340	1	1	1	RT05201140	Resistor, 200Ω ±5% ¼W
C401	1	1	1	EV33502560	Electrolytic Cap., 3.3μF ±20% 25V
C402	1	1	1	EV33502560	Electrolytic Cap., 3.3μF ±20% 25V
C403	1	1	1	DD16101010	Ceramic Cap., 100pF ±10% 50V
C404	1	1	1	DD16101010	Ceramic Cap., 100pF ±10% 50V
C405	1	1	1	EA10701090	Electrolytic Cap., 100μF $^{+50}_{-10}$% 10V
C406	1	1	1	EA10701090	Electrolytic Cap., 100μF $^{+50}_{-10}$% 10V
C407	1	1	1	DK17102010	Ceramic Cap., 0.001μF ±20% 50V
C408	1	1	1	DK17102010	Ceramic Cap., 0.001μF ±20% 50V
C409	1	1	1	DF15123010	Film Cap., 0.012μF ±5% 50V
C410	1	1	1	DF15123010	Film Cap., 0.012μF ±5% 50V
C411	1	1	1	DF15332010	Film Cap., 0.0033μF ±5% 50V
C412	1	1	1	DF15332010	Film Cap., 0.0033μF ±5% 50V
C413	1	1	1	EA10505090	Electrolytic Cap., 1μF $^{+75}_{-10}$% 50V
C415	1	1	1	EE10505040	Electrolytic Cap., 1μF ±20% 50V
C416	1	1	1	EE10505040	Electrolytic Cap., 1μF ±20% 50V
C417	1	1	1	EA10705090	Electrolytic Cap., 100μF $^{+50}_{-10}$% 50V
J401	1	1	1	YP10001130	Plug
J402	1	1	1	YP10001130	Plug
J404 ~ J408	5	5	5	YP10001130	Plug
					P400 PHONO AMP. BOARD
P400	1	1	1	YK22250610	P.W. Board
	1	1	1	ZZ22251040	P.W. Board Assembly
Q401	1	1	1	HC10012060	IC, μPC1024H
Q402	1	1	1	HC10012060	IC, μPC1024H
R401	1	1	1	GD05102140	Resistor, 1kΩ ±5% ¼W
R402	1	1	1	GD05102140	Resistor, 1kΩ ±5% ¼W
R403	1	1	1	GD05431140	Resistor, 430Ω ±5% ¼W
R404	1	1	1	GD05431140	Resistor, 430Ω ±5% ¼W
R405	1	1	1	GD05563140	Resistor, 56kΩ ±5% ¼W
R406	1	1	1	GD05563140	Resistor, 56kΩ ±5% ¼W
R407	1	1	1	GD05274140	Resistor, 270kΩ ±5% ¼W
R408	1	1	1	GD05274140	Resistor, 270kΩ ±5% ¼W
R409	1	1	1	GD05184140	Resistor, 180kΩ ±5% ¼W
R410	1	1	1	GD05184140	Resistor, 180kΩ ±5% ¼W
R411	1	1	1	GD05274140	Resistor, 270kΩ ±5% ¼W
R412	1	1	1	GD05274140	Resistor, 270kΩ ±5% ¼W
R413	1	1	1	GD05223140	Resistor, 22kΩ ±5% ¼W
R414	1	1	1	GD05223140	Resistor, 22kΩ ±5% ¼W
R415	1	1	1	GD05681140	Resistor, 680Ω ±5% ¼W
R416	1	1	1	GD05681140	Resistor, 680Ω ±5% ¼W
R417	1	1	1	GD05473140	Resistor, 47kΩ ±5% ¼W
R418	1	1	1	GD05473140	Resistor, 47kΩ ±5% ¼W
R419	1	1	1	GD05223140	Resistor, 22kΩ ±5% ¼W
R420	1	1	1	GD05223140	Resistor, 22kΩ ±5% ¼W
R421	1	1	1	GD05221140	Resistor, 220Ω ±5% ¼W
R422	1	1	1	GD05184140	Resistor, 180kΩ ±5% ¼W
C701	1	1	1	EE10602540	Electrolytic Cap., 10μF ±20% 25V
C702	1	1	1	EE10602540	Electrolytic Cap., 10μF ±20% 25V
C703	1	1	1	DD16101010	Ceramic Cap., 100pF ±10% 25V
C704	1	1	1	DD16101010	Ceramic Cap., 100pF ±10% 25V
C705	1	1	1	EE47603550	Electrolytic Cap., 47μF ±20% 35V
C706	1	1	1	EE47603550	Electrolytic Cap., 47μF ±20% 35V
C707	1	1	1	DD11050500	Ceramic Cap., 5pF ±0.25pF 500V
C708	1	1	1	DD11050500	Ceramic Cap., 5pF ±0.25pF 500V
C709	1	1	1	EA47605090	Electrolytic Cap., 47μF $^{+50}_{-10}$% 50V
C710	1	1	1	EA47605090	Electrolytic Cap., 47μF $^{+50}_{-10}$% 50V
C711	1	1	1	DK16101500	Ceramic Cap., 100pF ±10% 500V

- (U) for U.S.A.
- (C) for Canada
- (N) for Europe

REF. DESIG.	Q'TY U	Q'TY C	Q'TY N	PART NO.	DESCRIPTION
C712	1	1	1	DK16101500	Ceramic Cap., 100pF ±10% 500V
C713	1	1	1	DK16101500	Ceramic Cap., 100pF ±10% 500V
C714	1	1	1	DK16101500	Ceramic Cap., 100pF ±10% 500V
C715	1	1	1	DF16104050	Film Cap., 0.1μF ±10% 100V
C716	1	1	1	DF16104050	Film Cap., 0.1μF ±10% 100V
C717	1	1	1	EA10703590	Electrolytic Cap.,100μF $^{+50}_{-10}$% 35V
C718	1	1	1	EA33602590	Electrolytic Cap., 33μF $^{+50}_{-10}$% 25V
C750	1	1	1	DK18103510	Ceramic Cap., 0.01μF ±20% 500V
C751	1	1	1	EB47803520	Electrolytic Cap.,4700μF $^{+50}_{-10}$% 35V
C752	1	1	1	EB47803520	Electrolytic Cap.,4700μF $^{+50}_{-10}$% 35V
C753	1	1	1	EA33706310	Electrolytic Cap., 330μF $^{+50}_{-20}$% 63V
C754	1	1	1	EA22705090	Electrolytic Cap., 220μF $^{+50}_{-10}$% 50V
C755	1	1	1	EA10705090	Electrolytic Cap., 100μF $^{+50}_{-10}$% 50V
C756	1	1	1	EA33703590	Electrolytic Cap., 330μF $^{+50}_{-10}$% 35V
C757	1	1	1	EA22701690	Electrolytic Cap., 220μF $^{+50}_{-10}$% 16V
C758	1	1	1	EA10801690	Electrolytic Cap.,1000μF $^{+50}_{-10}$% 16V
C759	1	1	1	DK18103510	Ceramic Cap., 0.01μF ±20% 500V
F701	1	1		FS10350010	Fuse, SP. 3.5A 250V (UL)
F701			1	FS10350800	Fuse, SP. 3.5AT 250V (SEMKO)
F702	1	1		FS10350010	Fuse, SP. 3.5A 250V (UL)
F702			1	FS10350800	Fuse, SP. 3.5AT 250V (SEMKO)
J701 ~ J724	24	24	24	YP10001130	Plug
J725 ~ J728	4	4	4	YJ08000210	Jack,
J729 ~ J734	6	6	6	YP10001130	Plug
L701	1	1	1	LC22720010	Choke Coil, 2.7μH
L702	1	1	1	LC22720010	Choke Coil, 2.7μH
					P700 MAIN AMP BOARD
P700	1	1	1	YK22250210	P.W. Board
	1	1	1	ZZ22250210	P.W. Board, Assembly
Q701	1	1	1	HT107982A0	Transistor, 2SA 798 (F, G) Dual
Q702	1	1	1	HT107982A0	Transistor, 2SA 798 (F, G) Dual
Q703	1	1	1	HT313842C0	Transistor, 2SC1384 (R, S)
Q704	1	1	1	HT313842C0	Transistor, 2SC1384 (R, S)
Q705	1	1	1	HT309451Q0	Transistor, 2SC 945 (Q)
Q706	1	1	1	HT309451Q0	Transistor, 2SC 945 (Q)
Q707	1	1	1	HT106842B0	Transistor, 2SA 684 (Q, R)
Q708	1	1	1	HT106842B0	Transistor, 2SA 684 (Q, R)
Q709	1	1	1	HT313842B0	Transistor, 2SC1384 (Q, R)
Q710	1	1	1	HT313842B0	Transistor, 2SC1384 (Q, R)
Q711	1	1	1	HT205072A0	Transistor, 2SB 507 (D, E)
Q712	1	1	1	HT205072A0	Transistor, 2SB 507 (D, E)
Q713	1	1	1	HT403132A0	Transistor, 2SD 313 (D, E)
Q714	1	1	1	HT403132A0	Transistor, 2SD 313 (D, E)
Q715	1	1	1	HD20005010	Diode, W06B
Q716	1	1	1	HD20005010	Diode, W06B
Q717	1	1	1	HD20005010	Diode, W06B
Q718	1	1	1	HD20005010	Diode, W06B
Q719	1	1	1	HD30030090	Zener, WZ-177
Q750	1	1	1	HT313842B0	Transistor, 2SC1384 (Q, R)

REF. DESIG.	Q'TY U	Q'TY C	Q'TY N	PART NO.	DESCRIPTION
Q751	1	1	1	HD20007290	Diode, S3V10
Q752	1	1	1	HD20007290	Diode, S3V10
Q753	1	1	1	HD20007290	Diode, S3V10
Q754	1	1	1	HD20007290	Diode, S3V10
Q755	1	1	1	HD20008030	Diode, DS-133A
Q756	1	1	1	HD20008030	Diode, DS-133A
Q757	1	1	1	HD30021090	Zener, BZ-140
Q758	1	1	1	HD20005010	Diode, W06B
R701	1	1	1	RT05102140	Resistor, 1kΩ ±5% ¼W
R702	1	1	1	RT05102140	Resistor, 1kΩ ±5% ¼W
R703	1	1	1	RT05103140	Resistor, 10kΩ ±5% ¼W
R704	1	1	1	RT05103140	Resistor, 10kΩ ±5% ¼W
R705	1	1	1	RT05681140	Resistor, 680Ω ±5% ¼W
R706	1	1	1	RT05681140	Resistor, 680Ω ±5% ¼W
R707	1	1	1	RT05682140	Resistor, 6.8kΩ ±5% ¼W
R708	1	1	1	RT05682140	Resistor, 6.8kΩ ±5% ¼W
R709	1	1	1	RT05102140	Resistor, 1kΩ ±5% ¼W
R710	1	1	1	RT05102140	Resistor, 1kΩ ±5% ¼W
R711	1	1	1	RT05103140	Resistor, 10kΩ ±5% ¼W
R712	1	1	1	RT05103140	Resistor, 10kΩ ±5% ¼W
R713	1	1	1	GF05330140	Resistor, 33Ω ±5% ¼W
R714	1	1	1	GF05330140	Resistor, 33Ω ±5% ¼W
R715	1	1	1	RT05362140	Resistor, 3.6kΩ ±5% ¼W
R716	1	1	1	RT05362140	Resistor, 3.6kΩ ±5% ¼W
R717	1	1	1	RT05182140	Resistor, 1.8kΩ ±5% ¼W
R718	1	1	1	RT05182140	Resistor, 1.8kΩ ±5% ¼W
R719	1	1	1	RA01020150	Trimming Resistor, 1kΩ (B)
R720	1	1	1	RA01020150	Trimming Resistor, 1kΩ (B)
R721	1	1	1	RT05332140	Resistor, 3.3kΩ ±5% ¼W
R722	1	1	1	RT05332140	Resistor, 3.3kΩ ±5% ¼W
R723	1	1	1	RT05822140	Resistor, 8.2kΩ ±5% ¼W
R724	1	1	1	RT05822140	Resistor, 8.2kΩ ±5% ¼W
R725	1	1	1	GF05151140	Resistor, 150Ω ±5% ¼W
R726	1	1	1	GF05151140	Resistor, 150Ω ±5% ¼W
R727	1	1	1	GF05151140	Resistor, 150Ω ±5% ¼W
R728	1	1	1	GF05151140	Resistor, 150Ω ±5% ¼W
R729	1	1	1	GF05100140	Resistor, 10Ω ±5% ¼W
R730	1	1	1	GF05100140	Resistor, 10Ω ±5% ¼W
R731	1	1	1	GX10222030	Resistor, 0.22Ω ±10% 3W
R732	1	1	1	GX10222030	Resistor, 0.22Ω ±10% 3W
R733	1	1	1	GX10222030	Resistor, 0.22Ω ±10% 3W
R734	1	1	1	GX10222030	Resistor, 0.22Ω ±10% 3W
R735	1	1	1	RC10020120	Resistor, 2Ω ±10% ½W
R736	1	1	1	RC10020120	Resistor, 2Ω ±10% ½W
R737	1	1	1	RC10100120	Resistor, 10Ω ±10% ½W
R738	1	1	1	RC10100120	Resistor, 10Ω ±10% ½W
R739	1	1	1	GJ05331010	Resistor, 330Ω ±5% 1W
R740	1	1	1	GJ05331010	Resistor, 330Ω ±5% 1W
R741	1	1	1	GF05101140	Resistor, 100Ω ±5% ¼W
R742	1	1	1	GF05101140	Resistor, 100Ω ±5% ¼W
R743	1	1	1	GF05100140	Resistor, 10Ω ±5% ¼W
R744	1	1	1	GF05681140	Resistor, 680Ω ±5% ¼W
R750	1	1	1	RT05104140	Resistor, 100kΩ ±5% ¼W
R751	1	1	1	RT05183140	Resistor, 18kΩ ±5% ¼W
R752	1	1	1	GF05560120	Resistor, 56Ω ±5% ½W
R753	1	1	1	GF05100140	Resistor, 10Ω ±5% ¼W
R754	1	1	1	GJ05241030	Resistor, 240Ω ±5% 3W
R755	1	1	1	GJ05151020	Resistor, 150Ω ±5% 2W
R756	1	1	1	GF05100140	Resistor, 10Ω ±5% ¼W
R757	1	1	1	GJ05100010	Resistor, 10Ω ±5% 1W
S701	1	1	1	SP04020200	Pushswitch,
V701	1	1	1	IN10060390	Lamp, 6V
V702	1	1	1	IN10060390	Lamp 6V

17. TECHNICAL SPECIFICATIONS

FOR U.S.A. MODEL ONLY

AMPLIFIER SECTION:

RATED POWER OUTPUT, MINIMUM CONTINUOUS AVERAGE POWER PER CHANNEL, BOTH CHANNELS DRIVEN	**16 W**
POWER BAND	**20 Hz to 20 kHz**
TOTAL HARMONIC DISTORTION	**0.15%**
LOAD IMPEDANCE	**8 OHMS**
RATED POWER OUTPUT, MINIMUM CONTINUOUS AVERAGE POWER PER CHANNEL, BOTH CHANNELS DRIVEN	**20 W**
POWER BAND	**40 Hz to 20 kHz**
TOTAL HARMONIC DISTORTION	**0.3%**
LOAD IMPEDANCE	**4 OHMS**

Downloaded from www.hifiengine.com

I.M. Distortion	
(I.H.F. method, 60 Hz and 7 kHz mixed 4:1 at rated power output)	
at 8 ohm load impedance	0.15%
at 4 ohm load impedance	0.3%
Damping Factor (at 40 Hz)	40

PREAMPLIFIER SECTION:

Phono	
Input Overload at 1 kHz	100 mV
Equivalent Input Noise	2.5 μV
Dynamic Range	
(Dynamic Range is the ratio of input overload to equivalent input noise)	92 dB
Input Sensitivity	2.5 mV
Input Impedance	47k ohms
Input Capacitance	100 pF
Frequency Response, RIAA 20 Hz to 20 kHz	±1.0 dB
Signal-to-Noise Ratio	
(at rated output and 7.75 mV input)	74 dB
High Level (Aux and Tape)	
Input Sensitivity	180 mV
Input Impedance	20k ohms
Frequency Response	
(includes power amp)	20 Hz to 60 kHz ± 1.5 dB
Signal-to-Noise Ratio	
(ref. to rated output and 775 mV input)	85 dB
Output Levels	
Tape Out (ref. 7.75 mV at Phono inputs)	525 mV
Output Impedance	
Tape Out	600 ohms

FM TUNER SECTION:

Sensitivity	
IHF Usable	10.8 dBf (1.9 μV)
IHF 50 dB Quieting (Mono)	16.3 dBf (3.2 μV)
(Stereo)	37.3 dBf (40 μV)
Quieting Slope (Mono)	
RF Input for 30 dB Quieting	9.3 dBf (1.6 μV)
Quieting at:	
20 dBf (5.5 μV)	55 dB
25 dBf (10 μV)	60 dB
40 dBf (55 μV)	70 dB
65 dBf (1000 μV)	75 dB
Quieting Slope (Stereo)	
Quieting at:	
30 dBf (17 μV)	42 dB
40 dBf (55 μV)	53 dB
50 dBf (173 μV)	58 dB
65 dBf (1000 μV)	65 dB
Distortion (Mono) at 65 dBf (1000 μV)	
100 Hz	0.3%
1000 Hz	0.2%
6000 Hz	0.35%
Distortion (Stereo) at 65 dBf (1000 μV)	
100 Hz	0.5%
1000 Hz	0.4%
6000 Hz	0.55%
Distortion (Mono and Stereo)	
at 50 dB Quieting, 1000 Hz	0.6%
Hum and Noise	
at 65 dBf (1000 μV)	
Mono	70 dB
Frequency Response	
30 Hz to 15 kHz	
Mono	+0.2 dB, −1.5 dB
Stereo	±1.5 dB
Capture Ratio at 65 dBf (1000 μV)	1.0 dB
Alternate Channel Selectivity	70 dB
Spurious Response Rejection	80 dB
Image Response Rejection	55 dB
I.F. Rejection (Balanced)	90 dB
A.M. Suppression	50 dB
Stereo Separation	
100 Hz	40 dB
1000 Hz	45 dB
10 kHz	40 dB
Subcarrier Rejection	60 dB

AM TUNER SECTION:

IHF Usable Sensitivity	15 μV
Distortion (THD), 30% Modulation	0.5%
Signal-to-Noise Ratio	50 dB
Alternate Channel Selectivity	40 dB
Image Rejection	45 dB
Spurious Response Rejection	60 dB
I.F. Rejection	40 dB

GENERAL:

Power Requirements	120V AC, 60 Hz
Power Consumption at rated output, both channels operating	97 W
Idling Power (Volume Control at zero)	27 W
Dimensions:	
Panel Width	440 mm (17-5/16 inches)
Panel Height	137 mm (5-3/8 inches)
Depth	293 mm (11-7/16 inches)
Weight:	
Unit alone	9 kg (19.8 lbs)
Packed for Shipment	10.5 kg (23.1 lbs)

FOR EUROPEAN MODEL ONLY

AUDIO SECTION

POWER OUTPUT AT 1% DISTORTION	**33 W**
RATED POWER OUTPUT, 1 kHz	**22 W**
TOTAL HARMONIC DISTORTION AT RATED POWER OUTPUT, 1 kHz	**0.3%**
I.M. DISTORTION AT RATED POWER OUTPUT (I.H.F. METHOD, 300 Hz AND 10 kHz MIXED 4:1 AT RATED POWER OUTPUT)	**0.3%**
POWER BANDWIDTH, 1/2 RATED POWER OUTPUT	**8 Hz ~ 30 kHz**
LOAD IMPEDANCE	**4 OHMS**
POWER OUTPUT AT 1% DISTORTION	**27 W**
RATED POWER OUTPUT, 1 kHz	**18 W**
TOTAL HARMONIC DISTORTION AT RATED POWER OUTPUT, 1 kHz	**0.15%**
I.M. DISTORTION AT RATED POWER OUTPUT (I.H.F. METHOD, 300 Hz AND 10 kHz MIXED 4:1 AT RATED POWER OUTPUT)	**0.3%**
POWER BANDWIDTH, 1/2 RATED POWER OUTPUT	**8 Hz ~ 30 kHz**
LOAD IMPEDANCE	**8 OHMS**

Damping Factor, SP Output		
40 Hz		40
1 kHz		40
12.5 kHz		30
Frequency Response		
Phono	±2 dB	20 Hz ~ 20 kHz
Aux	±1.5 dB	15 Hz ~ 35 kHz
Signal-to-Noise Ratio, 1 kHz		
Phono		50 dB
Aux		50 dB
Input Sensitivity, 1 kHz (Rated Input Voltage)		
Phono		2.7 mV
Aux		180 mV
Input Impedance, 1 kHz		
Phono		47k ohms
Aux		20k ohms
Phono Equivalent Input Noise		2.5 μV
Phono Dynamic Range		90 dB
Phono Input Capacitance		100 pF
Channel Balance		
Phono	0 ~ −40 dB	2.5 dB
Aux	40 Hz ~ 16 kHz	2.0 dB
Interchannel Crosstalk		
Phono	1 kHz	35 dB
	250 Hz ~ 10 kHz	30 dB
Aux	1 kHz	43 dB
	250 Hz ~ 10 kHz	30 dB
Tape	1 kHz	43 dB
	250 Hz ~ 10 kHz	30 dB
Intersource Crosstalk, Worst Point		
1 kHz		43 dB
250 Hz ~ 10 kHz		30 dB
Output Voltage, 1 kHz		
Tape Out		0.18 V
Output Impedance, 1 kHz		
Tape Out		120 ohms
Overload Margin, 1 kHz		
Phono		30 dB
Aux		40 dB
Power Consumption		
Idling		27 W
Rated Power, 1 kHz		100 W

FM TUNER SECTION:

Frequency Range		87.5 ~ 108 MHz
Usable Sensitivity 40 kHz Deviation, 98 MHz		
Mono	S/N 26 dB	1.6 μV
Stereo	S/N 46 dB	47 μV
Alternate Channel Selectivity 98 MHz, ±300 kHz		50 dB
Image Response Rejection, 98 MHz		60 dB
IF Rejection, 98 MHz		80 dB
Spurious Response Rejection, 98 MHz		80 dB
AM Suppression, 98 MHz		50 dB
Signal-to-Noise Ratio at 98 MHz		
Un-weighted Mono		65 dB
	Stereo	58 dB
Weighted	Mono	68 dB
	Stereo	62 dB
Pilot Signal & Subcarrier Rejection		
19 kHz		60 dB
38 kHz		65 dB
Total Harmonic Distortion at 98 MHz		
Mono		0.2%
Stereo		0.4%
Frequency Response		
30 Hz ~ 15 kHz		+0.2 dB, −2.0 dB
Separation		
250 Hz ~ 6.3 kHz		40 dB
6.3 kHz ~ 12.5 kHz		35 dB
Channel Balance		0.5 dB
Output Voltage, 1 kHz		565 mV
Output Impedance, 1 kHz		2.3k ohms
Acceptable Loadilmpedance, 1 kHz		47k ohms
Antenna Terminals		
Balanced		300 ohms
Unbalanced		75 ohms

AM TUNER SECTION:

Frequency Range	515 ~ 1650 kHz
Usable Sensitivity 26 dB S/N 30% Mod., 1 MHz	25 μV
Selectivity 1 MHz, ±9 kHz	20 dB
Image Rejection, 1 MHz	18 dB
IF Rejection, 1 MHz	3 dB
Spurious Response Rejection, 1 MHz	60 dB
Signal-to-Noise Ratio, 1 MHz	52 dB
Frequency Response 1 MHz, ±3 dB	40 Hz ~ 2.3 kHz
Total Harmonic Distortion, 1 MHz	0.5%

GENERAL:

Power Requirements	200 V ~ 50 Hz
(E and N versions are featuring an external voltage selector for use on 110/120/240V. Other versions can be converted by a qualified technician to operate on 110/120/240V.)	
Power Consumption at rated output, both channels operating	97 W ± 15 W
Idling Power	27 W ± 5 W
Semiconductor Complement	
Integrated Circuits	5
Transistors	29
Diodes	18
Field Effect Transistors	1
Dimensions	
Panel Width	440 mm (17-5/16 inches)
Panel Height	137 mm (5-25/64 inches)
Depth	293 mm (11-17/32 inches)
Weight	
Unit Alone	9.0 kg (19.8 lbs)
Packed for Shipment	10.5 kg (23.1 lbs)

marantz

MARANTZ CO., INC. · P. O. BOX 577 · CHATSWORTH, CALIFORNIA · 91311

•

A WHOLLY-OWNED SUBSIDIARY OF SUPERSCOPE INC., CHATSWORTH, CALIFORNIA · 91311

Printed in Japan

2225855010