BLOCK DIAGRAM

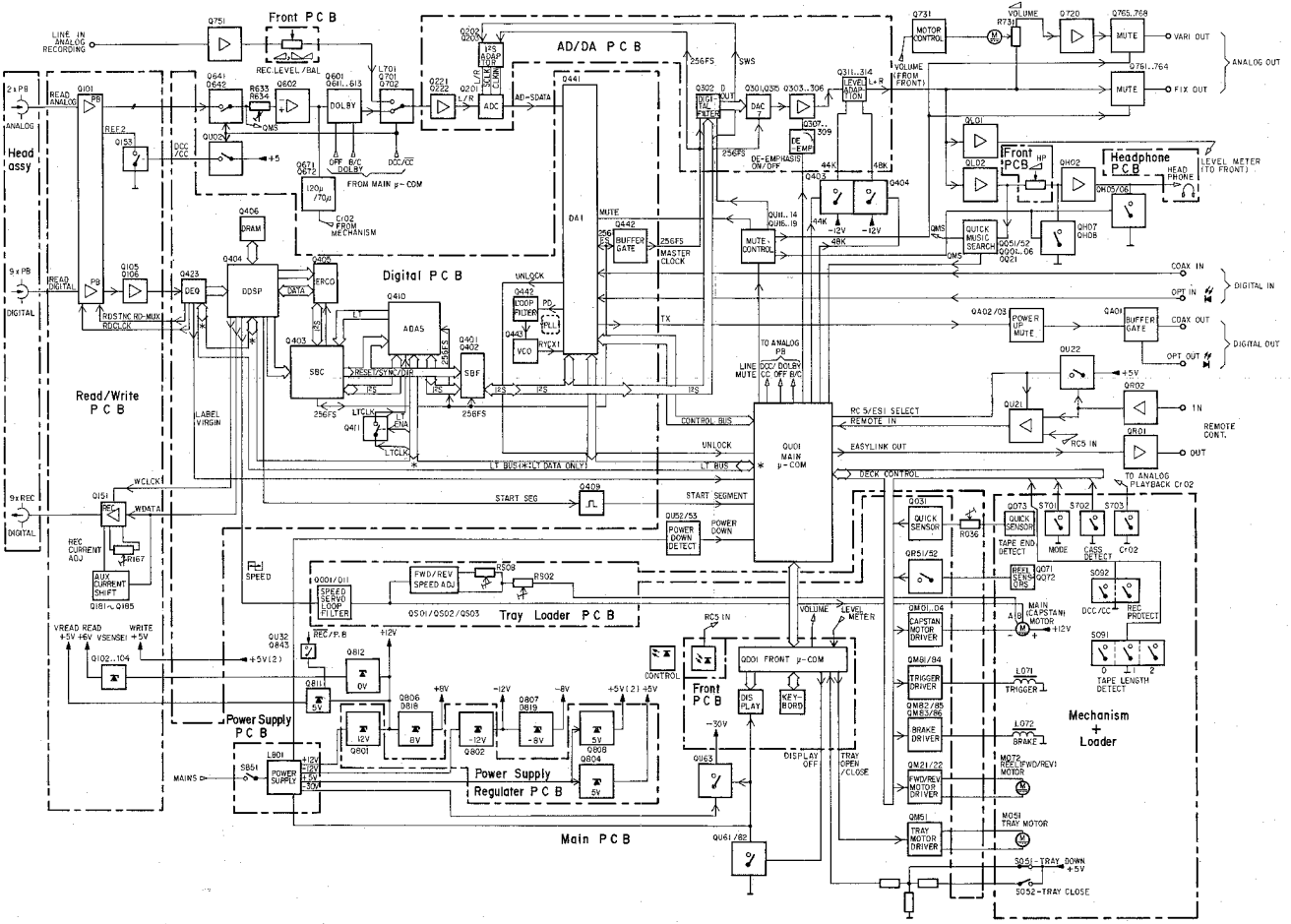

TRAY WIRE CONNECTION SERVO PCB (PM03)

QO01

Pin No.	1	2	3	4	5	6	7	8	9	10	11	12	13	14
Voltage	0.9V	2.5V	2.5V	13.4V	2.5V	2.5V	2.4V	1.8V	1.3V	1.3V	0V	2.5V	2.5V	2.5V

QS01

Pin No.	1	2	3	4	5	6	7	8	9	10	11	12	13	14
Voltage	-	13.3V	13.3V	13.3V	12.2V	12.2V	0V	13.3V	13.3V	13.3V	-	0V	0V	13.4V

QS02

Pin No.		E	C	B
Voltage		0V	-	12.2V

QS03

Pin No.		E	C	B
Voltage		0V	12.2V	0.6V

Q011

Pin No.	E	C	B
Voltage	1.3V	13.3V	1.6V

FRONT PCB (PD03)

QD01

Pin No.	1	2	3	4	5	6	7	8	9	10	11	12	13
Voltage	4.5V	5.0V	5.0V	5.0V	5.0V	-	0V	0V	-	0V	0V	-27.2V	-27.2V
Pin No.	14	15	16	17	18	19	20	21	22	23	24	25	26
Voltage	0V	4.5V	4.5V	4.5V	4.5V	4.5V	-27.2V	-27.2V	-27.2V	-27.2V	-27.2V	-27.2V	-27.2V
Pin No.	27	28	29	30	31	32	33	34	35	36	37	38	39
Voltage	-28.8V	-28.8V	-28.8V	-28.8V	-28.8V	-28.8V	-28.8V	-28.8V	-28.8V	-28.8V	-28.8V	-28.8V	-28.8V
Pin No.	40	41	42	43	44	45	46	47	48	49	50	51	52
Voltage	5.0V	5.0V	5.0V	5.0V	5.0V	5.0V	5.0V	5.0V	5.0V	5.0V	5.0V	5.0V	5.0V
Pin No.	53	54	55	56	57	58	59	60	61	62	63	64	65
Voltage	5.0V	4.8V	0V	4.8V	0V	-	0V	0V	0V	0V	0V	0V	0V
Pin No.	66	67	68	69	70	71	72	73	74	75	-	76	77
Voltage	0V	0V	0V	0V	0V	5.0V	0V	0V	0V	0V	-	5.0V	0V
Pin No.	78	79	80	81	82	83	84	85	86	87	88	89	90
Voltage	0V	0V	5.0V	4.7V	5.0V	4.5V	2.9V	0V	0V	0V	0V	0V	0V
Pin No.	91	92	93	94									
Voltage	0V	0V	0V	0V									

QD01

Pin No.	E	C	B
Voltage	5.0V	0V	5.0V

WIRING DIAGRAM

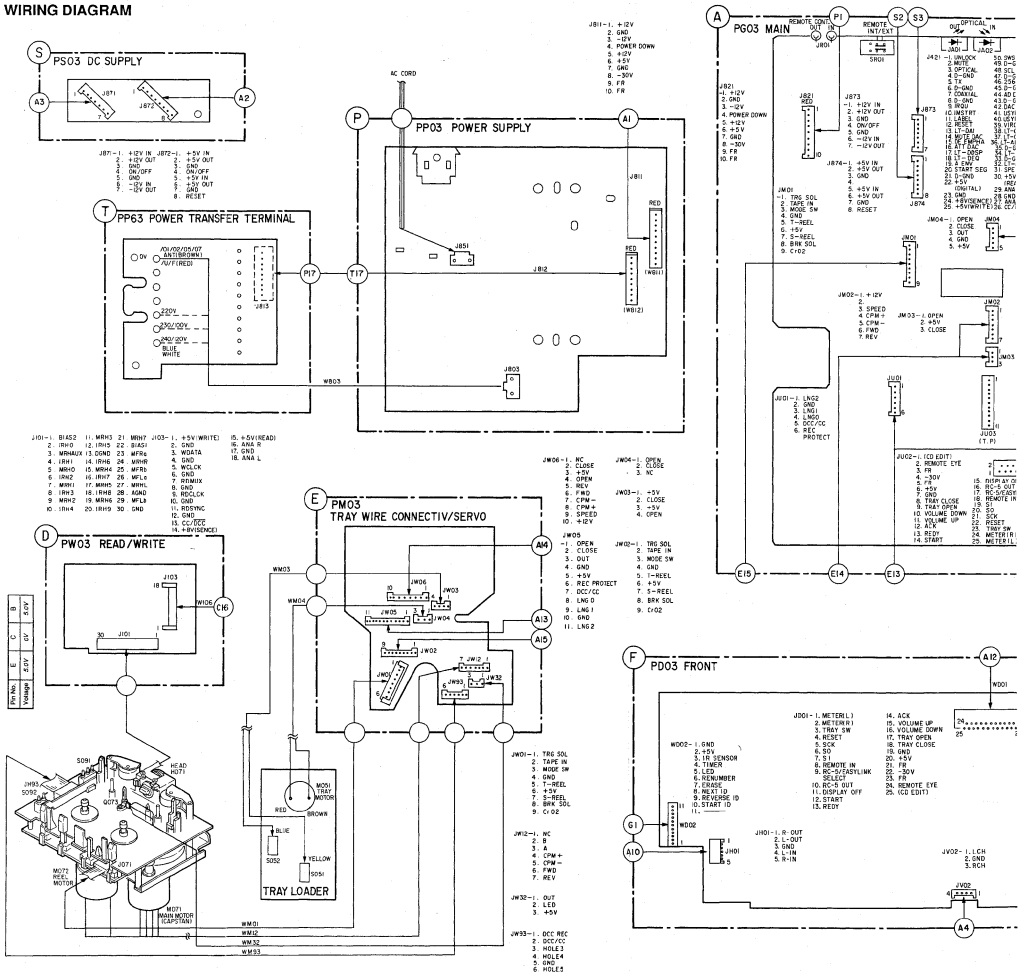

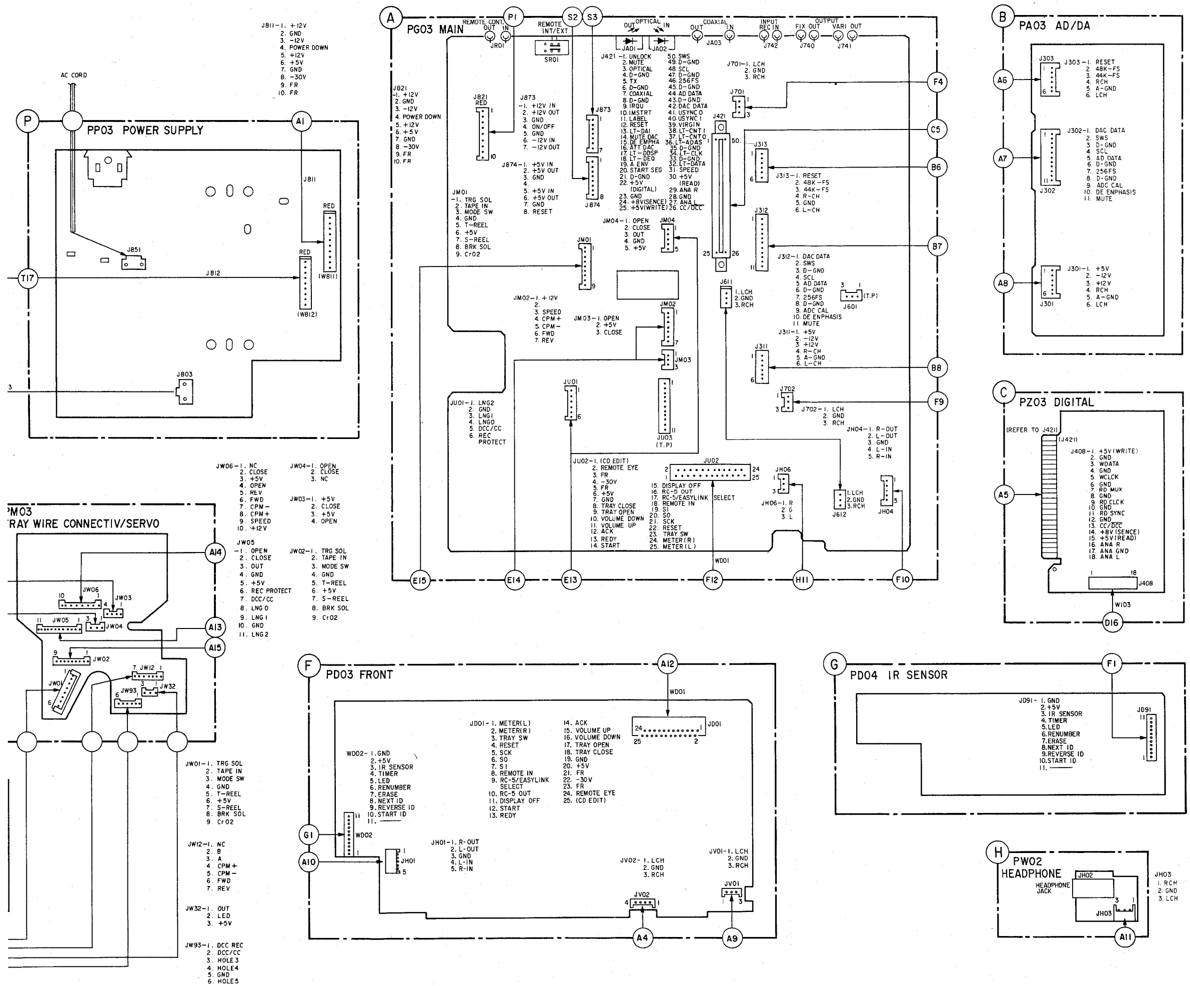

▲	Carbon film 0.125 W or 0.2 W	70°C	5%
□	Carbon film 0.25 W or 0.33 W	70°C	5%
■	Metal film 0.25 W or 0.33 W	70°C	5%
●	Carbon film 0.5 W	70°C	5%
▨	Carbon film 0.67 W	70°C	5%
◣	Carbon film 1 W or 1.15 W	70°C	5%

Ⓒ Chip component

△△*	Ceramic plate Tuning ⩽ 120 pF NP.0 Others	2% –20/+80%
●●*	Polyester flat foil	10%
□*	Metalized polyester flat film	10%
○□*	Polyester flat foil small size (Mylar)	10%
○△*	Polysterene film/foil	1%
■▲*	Tubular ceramic	
○*	Miniature single	
○○*	Subminiature tantalum	± 20%

*a = 2.5 V
b = 3.15 V or 4 V
c = 6.3 V
d = 10 V
e = 16 V
f = 25 V
g = 40 V
h = 63 V
j = 100 V
l = 125 V
m = 150 V
n = 160 V
q = 200 V
r = 250 V
s = 300 V
t = 350 V
u = 400 V
v = 500 V
w = 630 V
x = 1000 V
A = 1.6 V
B = 6 V
C = 12 V
D = 15 V
E = 20 V
F = 35 V
G = 50 V
H = 75 V
I = 80 V

SCHEMATIC DIAGRAM AND PARTS LOCATIONS

MAIN PCB (PG03)

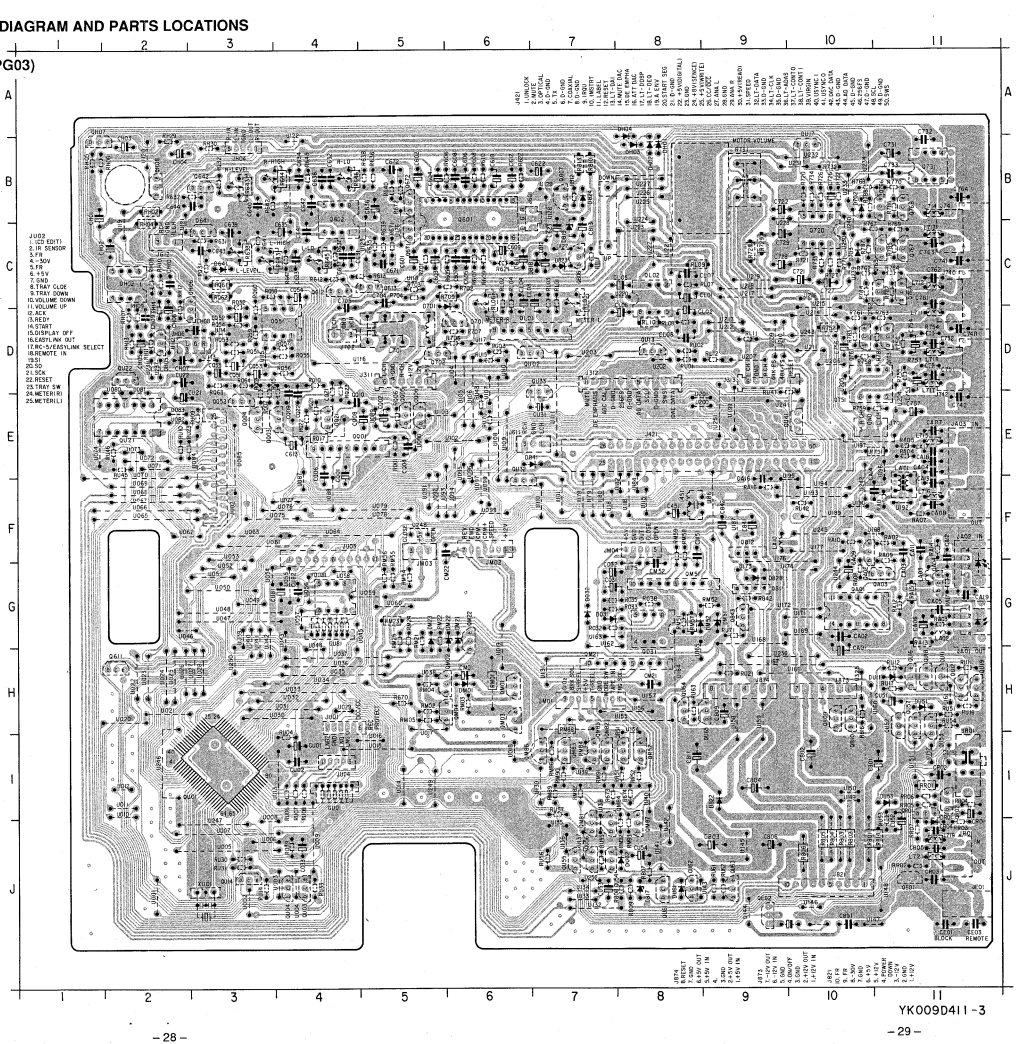

QC06	E5	R733	C10	RM55	G5	U007	J3	J873	H10	CH05	D2	C631	G7	U101	
QC21	E4	R734	B10	RM56	G5	U008	J3	J874	H9	CH06	D2	C632	G7	U102	
QC51	D4	R752	D10	RM57	G8	U009	J4	JA01	G11	CH07	D2	C633	J4	U103	
QC52	E3	R753	D11	RM58	F8	U010	I2	JA02	F11	CH08	D3	C451	F8	U104	
QR01	I1	R754	D11	RM59	F8	U011	I2	JA03	E11	CH09	D2	C601	C5	U105	
QR02	I1	R755	D11	RM82	I7	U012	I2	JE01	J11	CH10	C2	C602	B5	U106	
QR51	I8	R756	D11	RM84	I7	U013	I4	JH04	B3	CL01	C8	C603	C5	U107	
QR52	I8	R758	D10	RM86	I7	U014	I5	JH06	D3	CL02	D8	C604	B5	U108	
QU01	I3	R761	D10	RM88	H7	U015	I5	JM01	H7	CL03	C7	C605	C6	U109	
QU02	D6	R762	C10	RM89	I7	U016	I5	JM02	F6	CL04	C6	C606	B6	U110	
QU03	J4	R763	D11	RM90	I7	U017	I5	JM03	F5	CL05	C8	C607	C6	U111	
QU04	J4	R764	C11	RM91	I7	U018	I6	JM04	F8	CL06	D8	C608	B6	U112	
QU11	H11	R767	C10	RM92	J8	U019	G6	JR01	J11	CL07	C8	C609	C6	U113	
QU12	H11	R768	B10	RM93	J8	U020	H2	JU01	H4	CL08	D8	C610	B6	U115	
QU13	D8	R769	C11	RQ01	E5	U021	H2	JU02	F3	CM01	H6	C611	C6	U116	
QU14	J3	R770	B11	RQ03	E3	U022	H2	JU03	F4	CM21	H8	C612	B6	U117	
QU16	H11	R771	C10	RQ06	E5	U023	H2	JU04	F4	CM50	F5	C613	F4	U118	
QU17	B10	R781	D11	RQ07	E3	U024	H2	L451	F8	CM51	F8	C622	B7	U119	
QU18	H11	R782	C11	RQ10	D4	U025	H2	L701	D5	CM52	G8	C623	C7	U120	
QU19	H11	R783	D10	RQ15	E4	U026	H2	L711	D11	CQ01	E4	C631	C4	U121	
QU21	E2	R784	C10	RQ17	E4	U027	H3	L712	C11	CQ02	E5	C632	B4	U122	
QU22	D2	R785	C11	RQ21	D4	U028	H3	L713	C11	CQ04	E5	C633	C4	U124	
QU32	F6	R786	B11	RQ21	E4	U029	H3	L714	B11	CQ06	E4	C634	B4	U125	
QU33	H11	R787	C10	RQ22	E4	U030	H4	L715	E11	CQ08	E5	C635	C4	U126	
QU41	E10	R788	B10	RQ23	D4	U031	H4	L716	F11	CQ09	E4	C636	B5	U127	
QU52	H11	R801	J10	RQ23	E4	U032	H4	L717	D11	CQ10	E4	C637	C4	U128	
QU53	H11	R802	J10	RQ31	C3	U033	H4	L718	D11	CQ22	E4	C638	B4	U129	
QU54	J7	R803	J10	RQ32	B3	U034	H4	L719	J11	CQ51	D3	C639	C3	U130	
QU55	J7	R804	J10	RQ51	D3	U035	H4	L721	J11	CQ52	D3	C640	B3	U131	
QU56	J7	R805	J10	RQ52	C3	U036	H4	LA01	F11	CQ53	D3	C641	C4	U132	
QU57	H11	R806	J10	RQ53	D3	U037	H4	LA02	G11	CQ54	C4	C642	B4	U133	
QU61	J8	R807	J8	RQ54	D3	U038	H5	LA03	G11	CQ55	D3	C643	C3	U134	
QU62	J8	R808	J8	RQ55	D4	U039	G3	LA10	G5	CQ61	C5	C644	B3	U135	
QU63	J9	R809	J8	RQ56	D4	U040	G3	QG01	G8	CR02	I11	C671	C5	U136	
QU64	H8	R810	B7	RQ57	D4	U041	G3	QG02	B4	CR03	J11	C672	B5	U137	
QU65	H9	R811	C7	RQ58	C3	U042	G3	QG11	H2	CR04	J11	C704	C5	U138	
QU81	G4	R812	B7	RQ59	D3	U043	G4	QG12	C4	CR05	J11	C721	C10	U139	
R032	G7	R813	B7	RQ60	C3	U044	H4	QG13	C5	CU01	I4	C722	B9	U140	
R033	G7	R814	J11	RQ61	C3	U045	G4	QG41	C3	CU02	I4	C726	B10	U141	
R035	G7	R816	H10	RQ62	C3	U046	G2	QG42	B3	CU21	E2	C727	C10	U142	
R036	G8	R842	G9	RQ63	D3	U047	G3	QG51	C5	CU22	D2	C728	C9	U143	
R196	E11	RA01	F11	RQ64	D3	U048	G3	QG71	C5	CU31	E7	C729	C9	U144	
R204	E11	RA02	F11	RR01	I11	U049	G3	QG72	B5	CU51	H11	C731	B11	U145	
R571	E11	RA03	G11	RR02	J11	U050	G3	QT01	D6	CU52	J11	C732	B11	U146	
R579	D5	RA04	E11	RR03	J11	U051	G3	QT20	C10	CU54	J8	C733	B11	U147	
R605	C6	RA05	E11	RR04	I11	U052	G3	QT31	B11	CU57	J7	C740	D11	U148	
R606	B6	RA07	F11	RR05	I11	U053	F3	QT51	D10	CU81	G4	C741	C11	U149	
R607	C6	RA08	G10	RR06	I11	U054	G4	QT61	D10	CU82	G4	C742	E11	U150	
R608	B6	RA09	G11	RR07	J11	U055	G4	QT62	C11	D031	G7	C751	D11	U151	
R609	C6	RA10	F10	RR51	I8	U056	G4	QT63	C11	D032	G7	C752	D11	U152	
R610	B6	RA12	G11	RR52	I8	U057	G4	QT64	C11	D041	C3	C753	D11	U153	
R612	C4	RA13	G11	RU01	D8	U058	G4	QT65	C11	D701	D8	C754	D11	U154	
R613	C5	RA14	F11	RU02	D8	U059	G5	QT66	B11	D702	B10	C756	D10	U155	
R621	B8	RA15	G11	RU03	D6	U060	G5	QT67	C11	D703	C10	C757	D11	U156	
R622	B6	RA16	F9	RU04	I4	U061	F3	QT68	B11	D816	C7	C762	C11	U157	
R631	C3	RA17	G11	RU06	I4	U062	F2	QB06	C7	D819	C7	C763	C11	U158	
R632	B3	RH02	B2	RU07	I4	U063	F3	QB07	B7	D822	B8	C764	B11	U159	
R633	C3	RH05	B1	RU08	I4	U064	F4	QB09	H10	D823	C7	C801	I11	U160	
R635	C5	RH06	B1	RU09	E3	U065	F2	QB10	H10	D824	B7	C802	I10	U161	
R636	B5	RH07	D2	RU10	E2	U066	F2	QB11	G9	D828	G9	C803	J9	U162	
R637	C4	RH08	C2	RU11	H11	U067	F2	QB12	F9	D841	E7	C804	I9	U163	
R638	B5	RH09	D2	RU12	H11	U068	F2	QB43	G9	DH01	B8	C806	J9	U164	
R639	C5	RH10	C2	RU14	J3	U069	F2	QA01	G10	DH02	B8	C809	H9	U165	
R640	B5	RH11	D2	RU15	D6	U070	E2	QA02	F10	DH03	B8	C811	I8	U166	
R641	C3	RH12	D2	RU16	H11	U071	E2	QA03	G11	DH04	B8	C812	C7	U167	
R642	B3	RH13	D2	RU17	H11	U072	E2	QA04	G11	DH05	H6	C813	C7	U168	
R643	B3	RH14	D2	RU21	H9	U073	E2	QE01	J11	DM21	G6	C841	F9	U169	
R643	C4	RH29	B2	RU23	E3	U074	E1	QE02	J9	DM22	G6	C842	F9	U171	
R644	B4	RH30	B3	RU30	J3	U075	F3	QH02	C2	DM23	G6	C851	J10	U172	
R645	C4	RL01	C7	RU31	J3	U076	F4	QH05	D2	DM51	G9	CA01	H10	U173	
R646	B4	RL02	C6	RU33	J4	U077	F4	QH06	C3	DM52	G8	CA02	G10	U174	
R647	C4	RL03	C7	RU39	J4	U078	F5	QH07	B1	DM53	G8	CA03	F11	U175	
R648	B4	RL04	C6	RU42	F10	U079	F5	QH08	B2	DR01	J11	CA04	E11	U176	
R670	H5	RL05	C7	RU43	E8	U080	D2	QL01	D6	DU11	H11	CA05	G11	U177	
R671	C5	RL06	C6	RU45	E2	U081	D2	QL02	C8	DU51	H11	CA06	G11	U178	
R672	B5	RL07	C8	RU46	E2	U082	E2	QM01	H6	DU53	I11	CA07	E11	U179	
R673	I7	RL08	D8	RU51	H11	U083	E2	QM02	H5	DU61	J8	CA08	F11	U180	
R674	I8	RL09	C8	RU53	J11	U084	E3	QM03	H6	DU62	J8	CA09	G10	U181	
R701	C5	RL10	D8	RU54	H11	U085	E3	QM04	H5	GU01	I4	CA11	F11	U182	
R702	C6	RL11	D9	RU55	J7	U086	E3	QM21	H7	GU61	G4	CA12	F11	U183	
R703	C5	RL12	D9	RU56	J7	U087	F4	QM22	G8	J311	D5	CA13	F11	U184	
R704	C5	RM01	H6	RU57	I7	U088	F4	QM31	G8	J312	D6	CA14	F11	U185	
R705	C6	RM02	H5	RU61	J9	U089	E5	QM41	J7	J313	D9	CA16	F9	U186	
R706	D6	RM03	H6	RU62	J9	U090	E5	QM81	J7	J421	E8	CA17	E11	U187	
R707	D6	RM04	H5	RU63	H8	U091	F5	QM82	I7	J601	B7	CA18	E11	U188	
R720	B10	RM05	H5	RU70	E6	U092	F5	QM83	I7	J611	E7	CA19	G11	U189	
R721	C10	RM21	G5	RU71	G9	U093	F5	QM84	J7	J612	C2	CE01	J11	U190	
R722	B10	RM22	G5	SR01	I11	U094	F6	QM85	I7	J701	E10	CE03	F11	U191	
R726	B10	RM23	G5	U001	J2	U095	E6	QM86	I7	J702	D4	CH01	B1	U192	
R727	C10	RM24	G5	U001	J4	U096	E6	QM87	J8	J740	C11	CH02	C2	U193	
R728	C9	RM25	G5	U002	J3	U097	F6	QQ01	E4	J741	B11	CH03	B2	U194	
R729	C9	RM51	G8	U003	J4	U098	F6	QQ03	E4	J742	D11	CH04	B2	U195	
R731	B9	RM52	G9	U005	J3	U099	F6	QQ04	E3	J821	J10	CH04	C2	U196	
R732	B10	RM54	G5	U006	J3	U100	F7	QQ05	E5					U200	

YK009D411-3

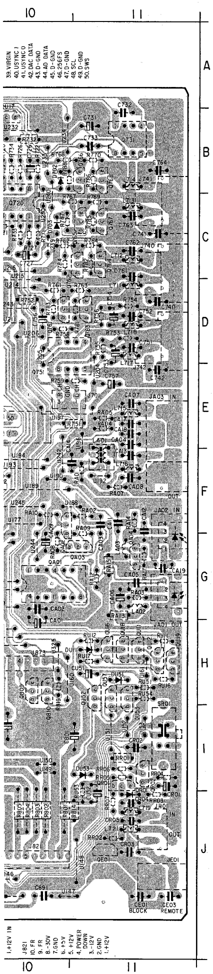

YK009D411-3

QQ06	E5	R733	C10	RM55	G5	U007	J3	J873	H10	CH05	D2	C031	G7	U101	F7	U201	E9
QQ21	E4	R734	B10	RM56	G5	U008	J3	J874	H9	CH06	D2	C032	G7	U102	E6	U202	D8
QQ51	D4	R752	D10	RM57	G8	U009	J4	JA01	G11	CH07	D2	C033	J4	U103	E5	U203	D7
QQ52	E3	R753	D11	RM58	F8	U010	I2	JA02	F11	CH08	D3	C451	F8	U104	D6	U206	D10
QR01	I11	R754	D11	RM59	F8	U011	I2	JA03	E11	CH09	D2	C601	C5	U105	E6	U207	D9
QR02	I11	R755	D11	RM82	I7	U012	I2	JE01	J11	CH10	C2	C602	B5	U106	E6	U209	D9
QR51	I8	R756	D11	RM84	I7	U013	I4	JH04	B3	CL01	C8	C603	C5	U107	D6	U210	D9
QR52	I8	R758	D10	RM86	I7	U014	I5	JH06	D3	CL02	D8	C604	B5	U108	E6	U211	D10
QU01	I3	R761	D10	RM88	H7	U015	I5	JM01	H7	CL03	C7	C605	C6	U109	E6	U212	D9
QU02	D6	R762	C10	RM89	I7	U016	I5	JM02	F6	CL04	C6	C606	B6	U110	D6	U213	D9
QU03	J4	R763	D11	RM90	I7	U017	H5	JM03	F5	CL05	C8	C607	C6	U111	E7	U214	D10
QU04	J4	R764	C11	RM91	I7	U018	I6	JM04	F8	CL06	D8	C608	B6	U112	D2	U215	D10
QU11	H11	R767	C10	RM92	J8	U019	G6	JR01	J11	CL07	C8	C609	C6	U113	D3	U216	C10
QU12	H11	R768	B10	RM93	J8	U020	H2	JU01	H4	CL08	D8	C610	B6	U115	D3	U217	C9
QU13	D8	R769	C11	RQ01	E5	U021	H2	JU02	F3	CM01	H6	C611	C6	U116	D5	U218	C9
QU14	J3	R770	B11	RQ03	E3	U022	H2	JU03	F4	CM21	H8	C612	B6	U117	D6	U219	C9
QU16	H11	R771	C10	RQ06	E5	U023	H2	JU04	I4	CM22	F5	C613	E4	U118	C5	U220	C8
QU17	B10	R781	D11	RQ07	E3	U024	H2	L451	F8	CM51	F8	C622	B7	U119	C2	U221	C8
QU18	H11	R782	C11	RQ10	D4	U025	H2	L701	D5	CM52	G8	C623	C7	U120	B2	U222	C8
QU19	H11	R783	D10	RQ15	E4	U026	H2	L711	D11	CQ01	E4	C631	C4	U121	C2	U223	C8
QU21	E2	R784	C10	RQ17	E4	U027	H3	L712	C11	CQ02	E5	C632	B4	U122	B4	U224	C8
QU22	D2	R785	C11	RQ21	D4	U028	H3	L713	C11	CQ04	E5	C633	C4	U124	B4	U225	B8
QU32	F6	R786	B11	RQ21	E4	U028	H3	L714	B11	CQ06	E4	C634	B4	U125	C5	U226	B8
QU33	D7	R787	C10	RQ22	E4	U029	H4	L715	E11	CQ08	E5	C635	C4	U126	C5	U227	B8
QU41	E10	R788	B10	RQ23	D4	U030	H4	L716	F11	CQ09	E4	C636	B5	U127	C7	U228	B9
QU52	H11	R801	J10	RQ23	E4	U031	H4	L717	D11	CQ10	E4	C637	C4	U128	B7	U230	C10
QU53	H11	R802	J10	RQ31	C3	U032	H4	L718	D11	CQ22	E4	C638	B4	U129	B7	U231	B10
QU54	J7	R803	J10	RQ32	B3	U033	H4	L719	J11	CQ51	D3	C639	C3	U130	I7	U232	B10
QU55	J7	R804	J10	RQ51	D3	U034	H4	L721	J11	CQ52	D3	C640	B3	U131	H7	U233	B10
QU56	J7	R805	J10	RQ52	C3	U035	H4	LA01	F11	CQ53	D3	C641	C4	U132	J7	U234	B10
QU57	H11	R806	J10	RQ53	D3	U036	H4	LA02	G11	CQ54	C4	C642	B4	U133	J7	U236	H9
QU61	J8	R807	J8	RQ54	D3	U037	H4	LA03	G11	CQ55	D3	C643	C3	U134	J7	U237	D2
QU62	J8	R808	J8	RQ55	D4	U038	H5	LA10	F9	CR01	I11	C644	B3	U135	J7	U238	D2
QU63	J9	R809	J8	RQ56	D4	U039	G3	Q031	G8	CR02	I11	C671	C5	U136	J7	U239	C10
QU64	H8	R810	B7	RQ57	D4	U040	G3	Q601	B6	CR03	J11	C672	B5	U137	J7	U240	C10
QU65	H9	R811	C7	RQ58	C3	U041	G3	Q602	B4	CR04	J11	C704	C5	U138	J7	U241	E9
QU81	G4	R812	B7	RQ59	D3	U042	G3	Q611	H2	CR05	J11	C721	C10	U139	I7	U243	D10
R032	G7	R813	B7	RQ60	C3	U043	G4	Q612	C4	CU01	I4	C722	B9	U140	I8	U244	G10
R033	G7	R814	J11	RQ61	C3	U044	H4	Q613	C5	CU02	I4	C726	B10	U141	J8	U245	F10
R035	G7	R816	H10	RQ62	C3	U045	G4	Q641	C3	CU21	E2	C727	C10	U142	J8	U246	I2
R038	G8	R842	G9	RQ63	D3	U046	G2	Q642	B3	CU22	D2	C728	C9	U143	J8	U247	J3
R196	E11	RA01	F11	RQ64	D3	U047	G3	Q671	C5	CU31	E7	C729	C9	U144	J9	U248	F5
R204	E11	RA02	F11	RR01	I11	U048	G3	Q672	B5	CU51	H11	C731	B11	U145	J9	U249	I5
R571	E11	RA03	G11	RR02	J11	U049	G3	Q701	D6	CU52	J11	C732	B11	U146	J10	U250	H3
R579	E11	RA04	E11	RR03	J11	U050	G3	Q702	D5	CU54	J8	C733	B11	U147	J10	U251	E9
R605	C6	RA05	E11	RR04	I11	U051	G3	Q720	C10	CU57	J7	C740	D11	U148	J11	U252	J7
R606	B6	RA07	F11	RR05	I11	U052	G3	Q731	B11	CU81	G4	C741	C11	U149	I10	U325	H10
R607	C6	RA08	G10	RR06	I11	U053	F3	Q751	D10	CU82	G4	C742	E11	U150	I10	XU01	J3
R608	B6	RA09	G11	RR07	J11	U054	G3	Q761	D10	D031	G7	C750	D11	U151	I11		
R609	C6	RA10	F10	RR51	I8	U055	G4	Q762	C11	D032	G7	C752	D11	U152	I11		
R610	B6	RA12	G11	RR52	I8	U056	G4	Q763	D11	D641	C3	C753	D11	U153	I11		
R612	C4	RA13	G11	RU01	D8	U057	G4	Q764	C11	D701	D6	C754	D11	U154	H8		
R613	C5	RA14	F11	RU02	D8	U058	G4	Q765	C11	D702	B10	C756	D10	U155	H8		
R621	C6	RA15	G11	RU03	D6	U059	G5	Q766	B11	D703	C10	C757	E11	U156	H8		
R622	B6	RA16	F9	RU04	I4	U060	G5	Q767	C11	D817	J8	C761	C11	U157	H8		
R631	C3	RA17	G11	RU06	I4	U061	F3	Q768	B11	D818	C7	C762	C11	U158	H9		
R632	B3	RH02	B2	RU07	I4	U062	F2	Q806	C7	D819	C7	C763	C11	U159	H9		
R633	C3	RH05	B1	RU08	I4	U063	F3	Q807	B7	D822	I9	C764	B11	U160	H10		
R635	C5	RH06	B1	RU09	E3	U064	F4	Q809	H10	D823	C7	C801	I11	U161	H11		
R636	B5	RH07	D2	RU10	E2	U065	F2	Q810	H10	D824	B7	C802	I10	U162	G7		
R637	C4	RH08	C2	RU11	H11	U066	F2	Q811	G9	D828	G9	C803	J9	U163	G7		
R638	B5	RH09	D2	RU12	H11	U067	F2	Q812	F9	D841	E7	C804	I9	U164	H8		
R639	C5	RH10	C2	RU14	J3	U068	F2	Q843	G9	DH01	B8	C806	J9	U165	H8		
R640	B5	RH11	D2	RU15	D6	U069	F2	QA01	G10	DH02	B8	C809	H9	U166	H10		
R641	C3	RH12	D2	RU16	H11	U070	E2	QA02	F10	DH03	B8	C811	I8	U167	H9		
R642	B3	RH13	D2	RU17	H11	U071	E2	QA03	G11	DH04	B8	C812	C7	U168	G9		
R643	B3	RH14	D2	RU21	H9	U072	E2	QA04	G11	DM01	H6	C813	C7	U169	G10		
R643	C4	RH29	B2	RU23	E3	U073	E2	QE01	J11	DM21	G6	C841	F9	U171	G10		
R644	B4	RH30	B3	RU30	J3	U074	E1	QE02	J9	DM22	G6	C842	F9	U172	G9		
R645	C4	RL01	C7	RU31	J3	U075	F3	QH02	C2	DM23	G5	C891	J10	U173	G9		
R646	B4	RL02	C6	RU33	J4	U076	F4	QH05	D2	DM51	G9	CA01	H10	U174	G9		
R647	C4	RL03	C7	RU39	J4	U077	F4	QH06	C3	DM52	G8	CA02	G10	U175	G8		
R648	B4	RL04	C6	RU42	F10	U078	F5	QH07	B1	DM52	G8	CA03	F11	U176	G9		
R670	H5	RL05	C7	RU43	E6	U079	F5	QH08	B2	DR01	J11	CA04	E11	U177	F10		
R671	C5	RL06	C6	RU45	E2	U080	D2	QL01	D6	DU11	H11	CA05	G11	U178	F7		
R672	B5	RL07	C8	RU46	E2	U081	D2	QL02	C8	DU51	H11	CA06	G11	U179	F7		
R673	I7	RL08	D8	RU51	H11	U082	E2	QM01	H6	DU53	I11	CA07	E11	U180	F7		
R674	I8	RL09	C8	RU53	J11	U083	E2	QM02	H5	DU61	J8	CA08	F11	U181	F7		
R701	C5	RL10	D8	RU54	H11	U084	E3	QM03	H6	DU62	J8	CA09	G10	U182	F8		
R702	C6	RL11	D9	RU55	J7	U085	E3	QM04	H5	GU01	I4	CA11	F11	U183	F8		
R703	C5	RL12	D9	RU56	J7	U087	F4	QM21	H7	GU81	G4	CA12	F11	U184	F8		
R704	C5	RM01	H6	RU57	I7	U088	F4	QM22	G6	J311	D5	CA13	F11	U185	F8		
R705	C6	RM02	H5	RU61	J9	U089	E5	QM51	G8	J312	D8	CA14	F11	U186	F9		
R706	D6	RM03	H6	RU62	J9	U090	E5	QM81	J7	J313	D9	CA16	F9	U187	F9		
R707	D6	RM04	H5	RU63	H8	U091	F5	QM82	I7	J421	E8	CA17	E11	U188	F10		
R720	B10	RM05	H5	RU70	E6	U092	F5	QM83	I7	J601	B7	CA18	E11	U189	F10		
R721	C10	RM21	G5	RU71	G9	U093	F5	QM84	J7	J611	E7	CA19	G11	U190	F10		
R722	B10	RM22	G5	SR01	I11	U094	F6	QM85	I7	J612	C2	CE01	J11	U192	F11		
R726	B10	RM23	G5	U001	J2	U095	E6	QM86	I7	J701	E10	CE03	J11	U193	F10		
R727	C10	RM24	G5	U001	J4	U096	E6	QM87	J8	J702	D4	CH01	B1	U194	F10		
R728	C9	RM25	G5	U002	J3	U097	F6	QQ01	E4	J740	C11	CH02	C2	U195	F10		
R729	C9	RM51	G8	U003	J4	U098	F6	QQ03	E4	J741	B11	CH03	B2	U197	E10		
R731	B9	RM52	G9	U005	J3	U099	F6	QQ04	E3	J742	D11	CH04	B2	U199	E9		
R732	B10	RM54	G5	U006	J3	U100	F7	QQ05	E5	J821	J10	CH04	C2	U200	E9		

POWER SUPPLY PCB (PP03)

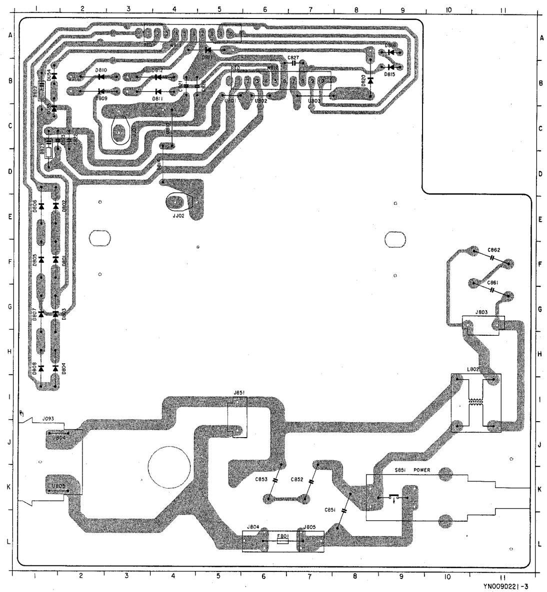

YN009D221-3

B822	B1
B823	D1
C821	B4
C822	C2
C823	C1
C826	B4
C827	B7
C851	K8
C852	K7
C853	K6
C861	G11
C862	F11
D801	F1
D802	E1
D803	G1
D804	H1
D805	F1
D806	E1
D807	G1
D808	H1
D809	B2
D810	B2
D811	B4
D812	B4
D815	B9
D816	A9
D820	B8
D821	A5
DU54	B1
DU55	C1
F801	L6
J093	J1
J804	L6
J805	L7
J851	I5
J861	G11
JJ01	C3
JJ02	E4
L802	I11
S851	K9
U801	B5
U802	B6
U803	B7
U804	J1
U805	K1
U810	C4
U814	D4
W811	A4
W812	B6

DC SUPPLY PCB (PS03)

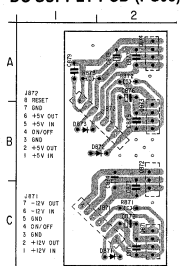

YK009D412-3

C871	C2
C872	C2
C873	C2
C874	A2
C874	B2
C875	B2
C876	A2
C877	A2
C878	A2
C879	A1
D871	C2
D872	B2
D873	B1
J871	C2
J872	B2
Q871	C2
Q872	B2
Q873	B2
R871	C2
R872	A2
R873	A1

POWER TRANSFORMER TERMINAL PCB (PP63)

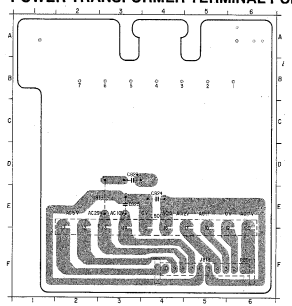

YN009D222-3

C824	E4
C825	E3
C829	D3
J813	F5
L801	E4
U813	E3

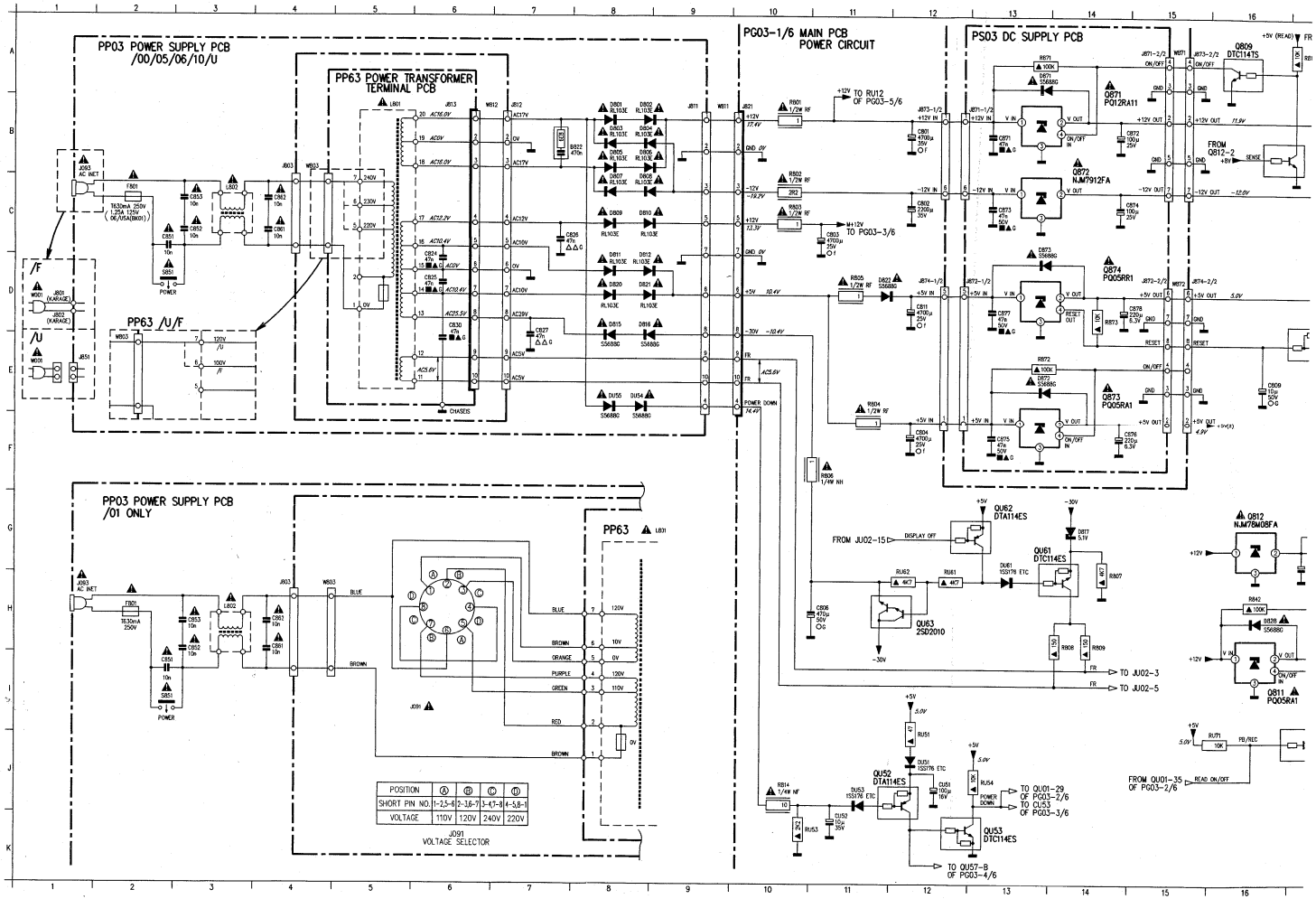
PP03 POWER SUPPLY PCB
/00/05/06/10/U
PP63 POWER TRANSFORMER
TERMINAL PCB
PP63 /U/F
/F
/U
PP03 POWER SUPPLY PCB
/01 ONLY
PP63
PG03-1/6 MAIN PCB
POWER CIRCUIT
PS03 DC SUPPLY PCB
Q871
P012RA11
Q872
NJM7912FA
Q874
P005RR1
Q873
P005RA1
Q809
DTC114TS
Q812
NJM78M08FA
Q811
P005RA1
QU62
DTA114ES
QU61
DTC114ES
QU63
2SD2010
QU52
DTA114ES
QU53
DTC114ES
TO JU02-3
TO JU02-5
TO QU01-29
OF PG03-2/6
TO CU53
OF PG03-3/6
TO QU57-B
OF PG03-4/6
FROM QU01-35
OF PG03-2/6
J091
VOLTAGE SELECTOR
POSITION | Ⓐ | Ⓑ | Ⓒ | Ⓓ
SHORT PIN NO. | 1-2,5-6 | 2-3,6-7 | 3-4,7-8 | 4-5,8-1
VOLTAGE | 110V | 120V | 240V | 220V

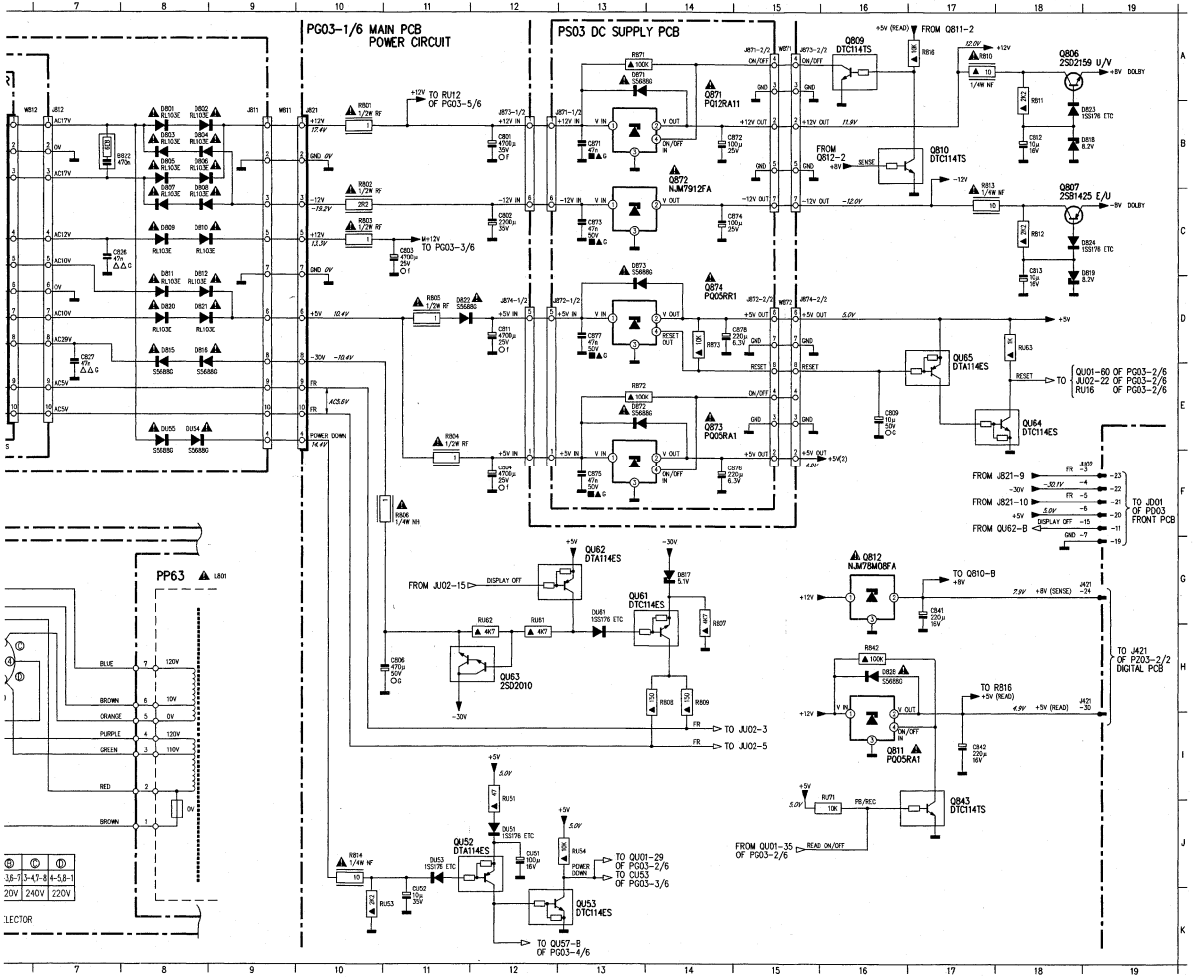

B622	B7	J421-30	I19
C801	B12	J801	D1
C802	C12	J803	C4
C803	C11	J803	H4
C804	F12	J811	B6
C806	H11	J812	B7
C809	E16	J813	B6
C811	D12	J821	B10
C812	B18	J831	C1
C813	C18	J851	H1
C824	D6	J871	B12
C825	D6	J872	D12
C826	C7	J873	B12
C827	E7	J874	D12
C830	6E	JU02-15	F19
C841	G17	JU02-3	F19
C842	I17	JU02-4	F19
C851	C2	JU02-5	F19
C851	I2	JU02-6	F19
C852	C2	L801	B5
C852	H2	L801	G8
C853	C2	L802	C3
C853	H2	L802	H3
C861	C4	Q806	A18
C861	H4	Q807	C18
C862	C4	Q809	A16
C862	H4	Q810	B16
C871	B13	Q811	I16
C872	B14	Q812	G16
C873	C13	Q843	J17
C874	C14	Q871	B13
C875	F13	Q872	C13
C876	F14	Q873	F13
C877	D13	Q874	D13
C878	D14	QU52	J12
CU51	J12	QU53	K12
CU52	K11	QU61	G14
D801	B8	QU62	G13
D802	B8	QU63	H12
D803	B8	QU64	E18
D804	B8	QU65	E17
D805	B8	R801	B10
D806	B8	R802	C10
D807	C8	R803	C10
D808	C8	R804	F11
D809	C8	R805	D11
D810	C8	R806	F11
D811	D8	R807	G14
D812	D8	R808	H14
D815	D8	R809	H14
D816	D8	R810	A17
D817	G14	R811	A18
D818	B18	R812	C18
D819	C18	R813	C17
D820	D8	R814	J10
D821	D8	R816	A17
D822	D11	R842	H16
D823	B18	R871	A13
D824	C18	R872	E13
D828	H16	R873	D14
D871	A13	RU51	I12
D872	E13	RU53	K10
D873	D13	RU54	J13
DU51	J12	RU61	H12
DU53	J11	RU62	H12
DU54	E8	RU63	D18
DU55	E8	RU71	J16
DU61	H13	S851	D2
F801	C2	S851	I2
F801	H2	W001	D1
J091	H8	W001	E1
J093	C1	W803	E2
J093	H1	W803	H4
J421-24	G19		

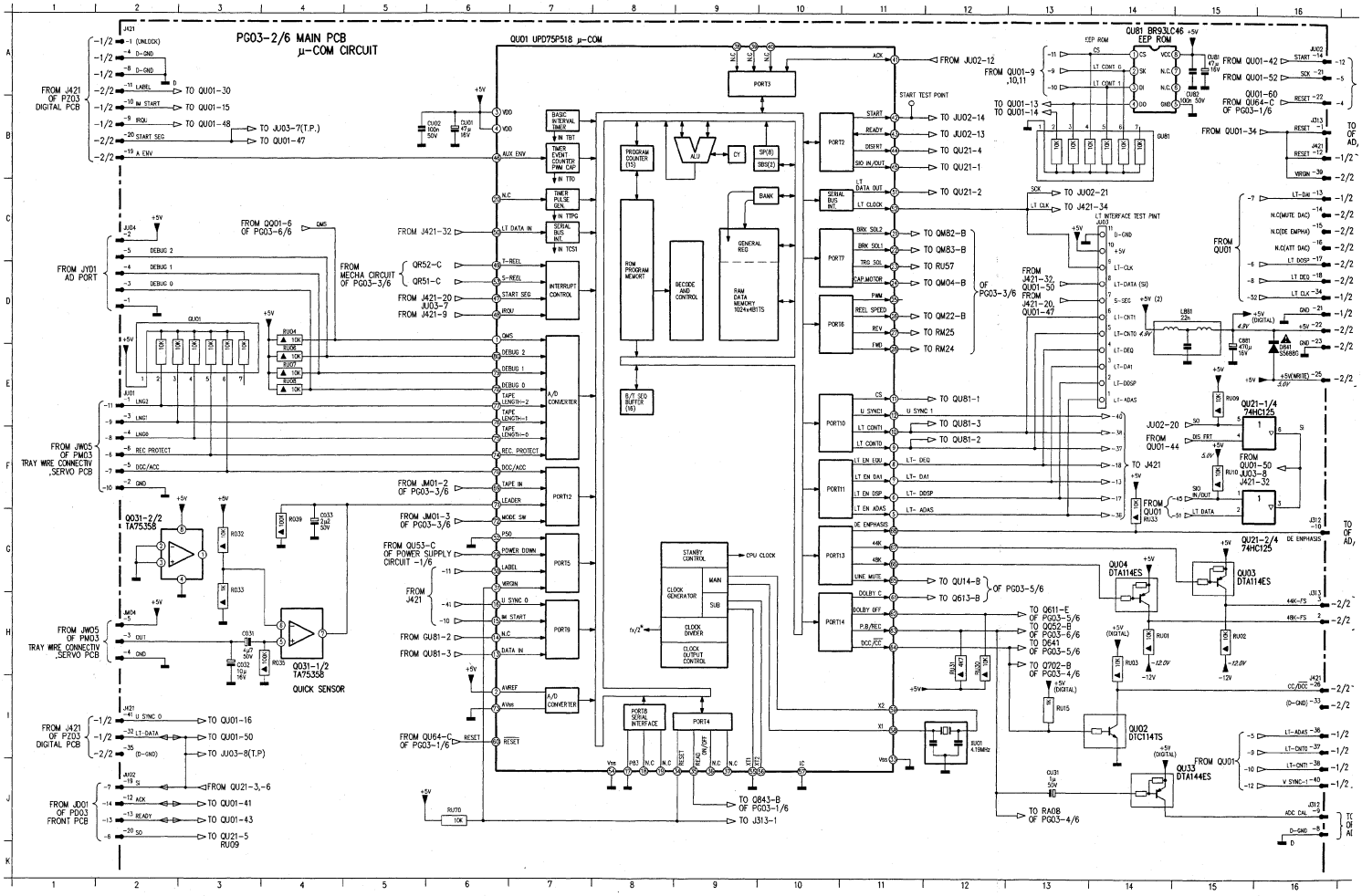
PG03-2/6 MAIN PCB
μ-COM CIRCUIT
QU01 UPD75P518 μ-COM
QU81 BR93LC46 EEP ROM
FROM J421 OF PZ03 DIGITAL PCB
FROM JY01 AD PORT
FROM JW05 OF PM03 TRAY WIRE CONNECTIV ,SERVO PCB
FROM MECHA CIRCUIT OF PG03-3/6
FROM QU01-6 OF PG03-6/6
FROM QU53-C OF POWER SUPPLY CIRCUIT -1/6
FROM QU64-C OF PG03-1/6
FROM QU81-2
FROM QU81-3
FROM QU01-42
FROM QU01-52
FROM QU01-60 OF QU64-C OF PG03-1/6
FROM QU01-34
FROM QU01-50 J421-32
FROM QU01-44
FROM QU01-20 J421-20, QU01-47
FROM QU01-9 ,10,11
TO QU01-13 TO QU01-14
TO QU01-30
TO QU01-15
TO QU01-48
TO JU03-7(T.P.)
TO QU01-47
TO QU01-16
TO QU01-50
TO JU03-8(T.P)
FROM QU21-3,-6
TO QU01-41
TO QU01-43
TO QU21-5 RU09
TO QU02-12
TO QU02-14
TO QU02-13
TO QU21-4
TO QU21-1
TO QU21-2
TO QU02-21
TO J421-34
TO QM82-B
TO QM83-B
TO RU57
TO QM04-B
TO QM22-B
TO RM25
TO RM24
TO QU81-1
TO QU81-3
TO QU81-2
TO J421
TO QU14-B
TO Q613-B
OF PG03-5/6
TO Q611-E OF PG03-5/6
TO Q052-B OF PG03-6/6
TO Q641 OF PG03-5/6
TO Q702-B OF PG03-4/6
TO RA08 OF PG03-4/6
TO Q843-B OF PG03-1/6
TO J313-1
OF PG03-3/6
Q031-2/2 TA75358
Q031-1/2 TA75358
QUICK SENSOR
QU21-1/4 74HC125
QU21-2/4 74HC125
QU04 DTA114ES
QU03 DTA114ES
QU02 DTC114TS
QU33 DTA144ES
PORT3
PORT2
PORT7
PORT6
PORT10
PORT11
PORT13
PORT14
PORT12
PORT15
PORT9
PORT8
PORT4
BASIC INTERVAL TIMER
TIMER EVENT COUNTER PWM CAP
TIMER PULSE GEN.
SERIAL BUS INT.
INTERRUPT CONTROL
A/D CONVERTER
PROGRAM COUNTER (15)
ALU
CY
SP(8)
SBS(2)
BANK
GENERAL REG
ROM PROGRAM MEMORT
DECODE AND CONTROL
RAM DATA MEMORY 1024×4BITS
B/T SEQ BUFFER (16)
STANBY CONTROL
CLOCK GENERATOR
MAIN
SUB
CLOCK DIVIDER
CLOCK OUTPUT CONTROL
CPU CLOCK
SERIAL INTERFACE
X2
X1
Vss
Vcc
P63
N.C
RESET
READ
IN/OFF
X1
X2
FS
RU70 10K
RU02 4.19MHz
LB81 22μ
CB81 470μ 16V
DB81 1SS86B
RU09 10K
RU10 10K
RU01 10K
RU02 10K
RU03 10K
RU15 1K
RU31 1K 50V
CU02 100μ 50V
CU01 47μ 16V
CU03 47μ 16V
CU33 2μ2 50V
CU35 4μ7 50V
CU32 10μ 16V
RU39 10K
RU32 1M
RU33 10K
RU35 10K
RU36 10K
RU04 10K
RU05 10K
RU07 10K
RU08 10K
RU06 10K
+5V
+5V(DIGITAL)
+5V(MRETD)
-12V
-12.0V
+5.0V
4.9V
3.6V
5.0V
CC/DC
D-GND
ADC CAL
DE EMPHASIS
LT INTERFACE TEST PINT
START TEST POINT
EEP ROM
CS
SK
DI
DO
VCC
N.C
GND
START
READY
DESRIT
SIO IN/OUT
LT DATA OUT
LT CLOCK
BRK SOL2
BRK SOL1
TRG SOL
CAP MOTOR
PWM
REEL SPEED
REV
FWD
U SYNC1
LT CONT1
LT CONT0
LT EN EQU
LT EN DAT
LT EN DSP
LT EN ADAS
48K
LINE MUTE
DOLBY C
DOLBY OFF
P.B/REC
DCC/CC
AVREF
AVss
RESET
LT DATA IN
T-REEL
S-REEL
START SEG
IRQU
QM5
DEBUG 2
DEBUG 1
DEBUG 0
TAPE LENGTH-2
TAPE LENGTH-1
TAPE LENGTH-0
REC PROTECT
DCC/ACC
TAPE IN
LEADER
MODE SW
P50
POWER DOWN
LABEL
MIRON
U SYNC 0
M START
N.C
DATA IN
LT-DAI
LT-CNTO
LT-CNT1
V SYNC-1
LT-ADAS
LT-DEQ
LT-DDSP
LT-DA1
LT-CLK
LT-DATA (SI)
S-SEG
L1-CNTO
L1-CNT1
L1-DEQ
L1-DA1
L1-DDSP
L1-ADAS
+5V(MRETD)
D-GND
ADC CAL
DE EMPHASIS
LT DATA
SIO IN/OUT
DIS FRT
SO
SI
SCK
RESET
START
LT CONT 0
LT CONT 1
VRGIN
N.C(MUTE DAC)
N.C(DE EMPHA)
N.C(ATT DAC)
LT DOSP
LT DEQ
LT DA1
LT CLK
GND
LT-DAI
LT-CNTO
LT-CNT1
V SYNC-1
LT-ADAS
LT-DEQ
LT-DA1
LT-DDSP
LT-ADAS
U SYNC 0
LT-DATA
(D-GND)
D

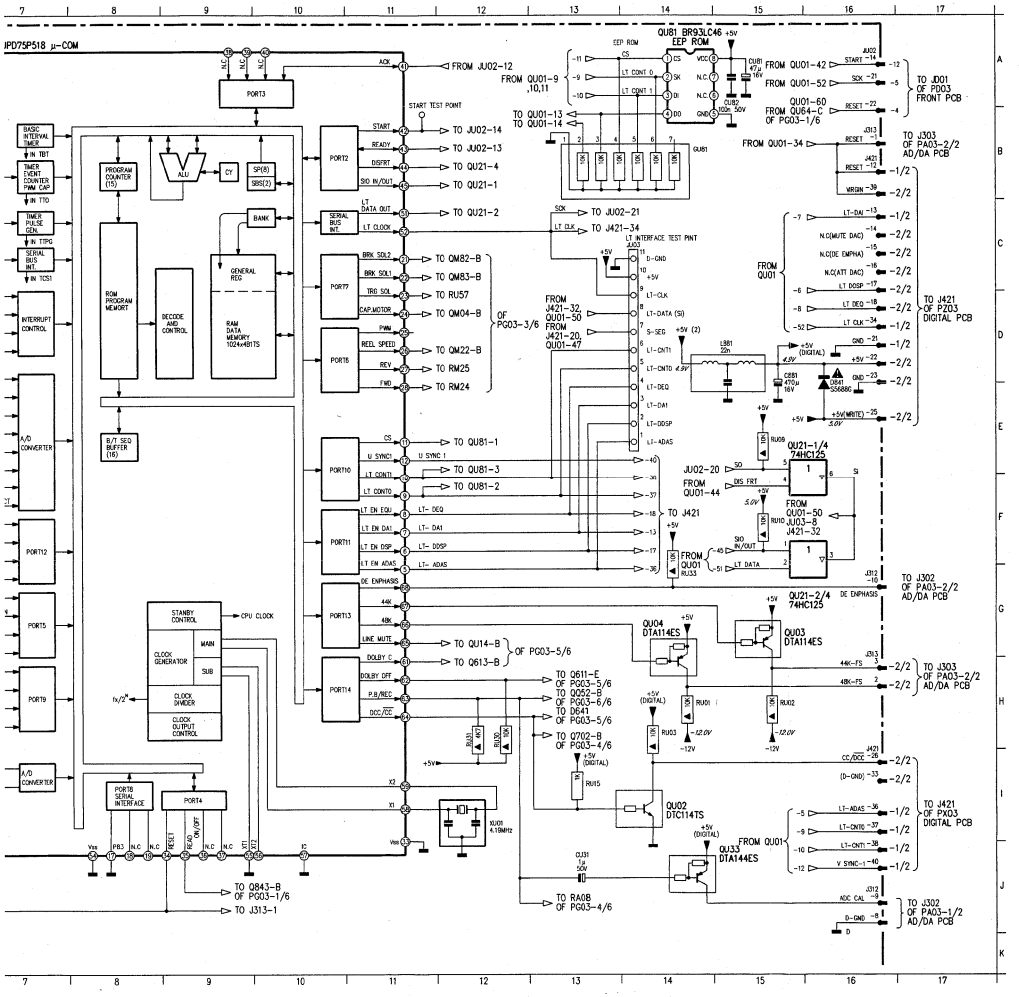

C031	H3	JU01-2	F2
C032	H3	JU01-3	E2
C033	G4	JU01-4	F2
C881	D15	JU01-5	F2
CU01	B6	JU01-6	F2
CU02	B5	JU02-12	J2
CU31	J13	JU02-13	J2
CU81	A15	JU02-14	A16
CU82	A15	JU02-19	J2
D641	D16	JU02-20	J2
GU01	D3	JU02-21	A16
GU81	B14	JU03	C14
J312-10	G16	JU03-1	E14
J312-8	J16	JU03-2	E14
J312-9	J16	JU03-3	E14
J313-1	B16	JU03-4	E14
J313-2	H16	JU04-1	D2
J313-3	H16	JU04-2	C2
J421-1	A2	JU04-3	D2
J421-10	B2	JU04-4	D2
J421-11	A2	JU04-5	C2
J421-12	B16	L881	D15
J421-13	C16	QO31-1/2	H4
J421-14	C16	QU01	A7
J421-15	C16	QU02	I14
J421-16	C16	QU03	G15
J421-17	C16	QU04	G14
J421-18	D16	QU21-1/4	E16
J421-19	B2	QU21-2/4	F16
J421-20	B2	QU31-2/2	G3
J421-21	D16	QU33	J14
J421-22	D16	QU81	A14
J421-23	D16	R032	G3
J421-25	E16	R033	H3
J421-26	I16	R035	H4
J421-32	I2	R039	G4
J421-33	I16	RU01	H14
J421-34	D16	RU02	H15
J421-35	J3	RU03	H11
J421-36	I16	RU04	D4
J421-37	I16	RU08	E4
J421-38	J16	RU07	E4
J421-39	B16	RU08	E4
J421-4	A2	RU09	E15
J421-40	J16	RU10	F15
J421-41	I2	RU15	J13
J421-8	A2	RU30	H12
J421-9	B2	RU31	H12
JM04-3	H2	RU33	F14
JM04-4	H2	RU70	J6
JM04-5	H2	XU01	I12
JU01-1	E2		

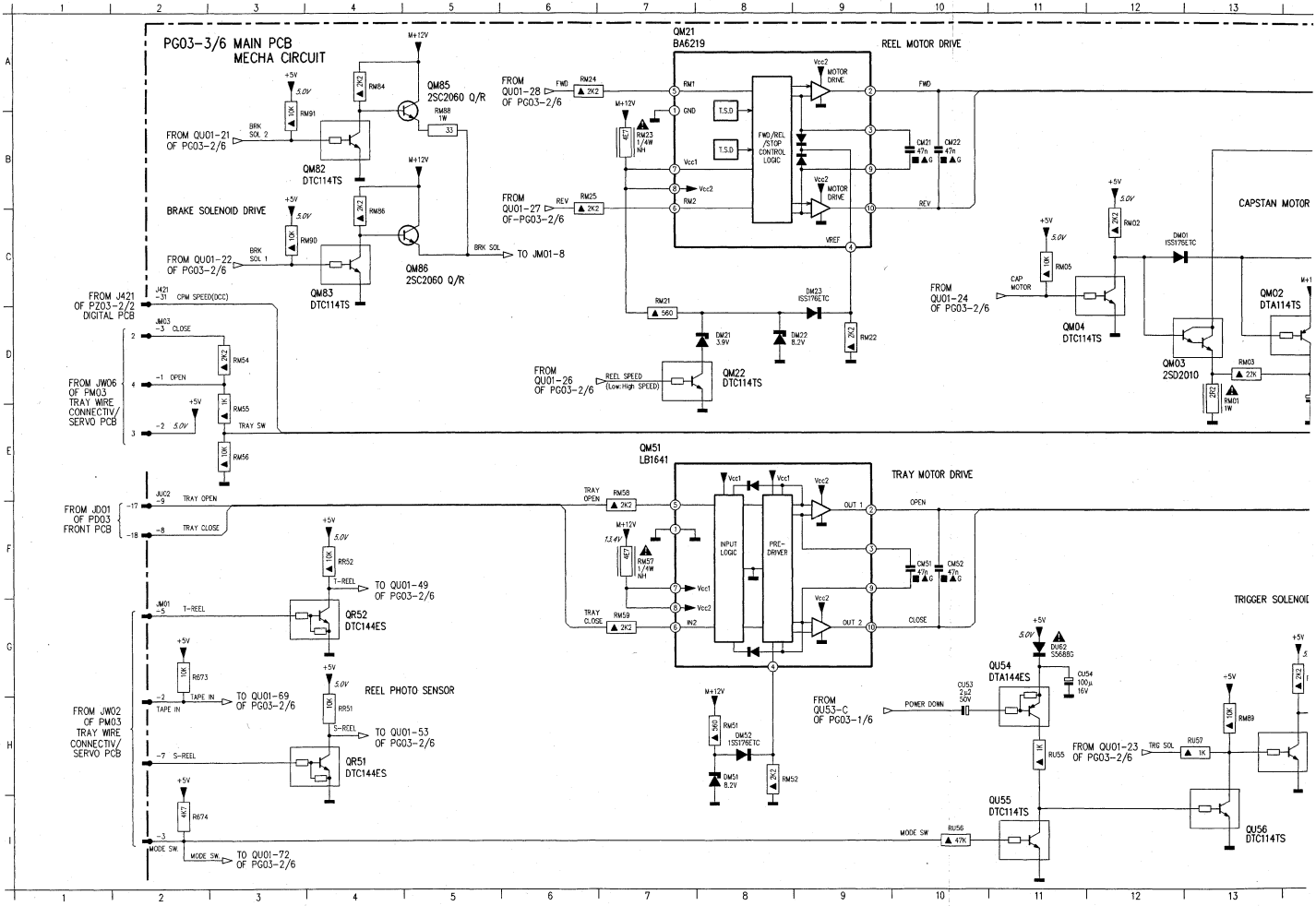
PG03-3/6 MAIN PCB
MECHA CIRCUIT
BRAKE SOLENOID DRIVE
QM85
2SC2060 Q/R
QM86
2SC2060 Q/R
QM82
DTC114TS
QM83
DTC114TS
FROM QU01-21 OF PG03-2/6
FROM QU01-22 OF PG03-2/6
TO JM01-8
FROM J421 OF PZ03-2/2 DIGITAL PCB
FROM JW06 OF PM03 TRAY WIRE CONNECTIV/ SERVO PCB
FROM JD01 OF PD03 FRONT PCB
FROM JW02 OF PM03 TRAY WIRE CONNECTIV/ SERVO PCB
CPM SPEED(DCC)
CLOSE
OPEN
TRAY SW
TRAY OPEN
TRAY CLOSE
T-REEL
TAPE IN
S-REEL
MODE SW
TO QU01-49 OF PG03-2/6
TO QU01-69 OF PG03-2/6
TO QU01-53 OF PG03-2/6
TO QU01-72 OF PG03-2/6
REEL PHOTO SENSOR
QR52
DTC144ES
QR51
DTC144ES
QM21
BA6219
REEL MOTOR DRIVE
FROM QU01-28 OF PG03-2/6
FROM QU01-27 OF-PG03-2/6
FROM QU01-26 OF PG03-2/6
REEL SPEED (Low:High SPEED)
FWD/REV /STOP CONTROL LOGIC
MOTOR DRIVE
QM22
DTC114TS
CAPSTAN MOTOR
FROM QU01-24 OF PG03-2/6
QM04
DTC114TS
QM03
2SD2010
QM02
DTA114TS
QM51
LB1641
TRAY MOTOR DRIVE
INPUT LOGIC
PRE-DRIVER
TRIGGER SOLENOID
FROM QU53-C OF PG03-1/6
POWER DOWN
QU54
DTA144ES
QU55
DTC114TS
QU56
DTC114TS
FROM QU01-23 OF PG03-2/6
TRG SOL
MODE SW

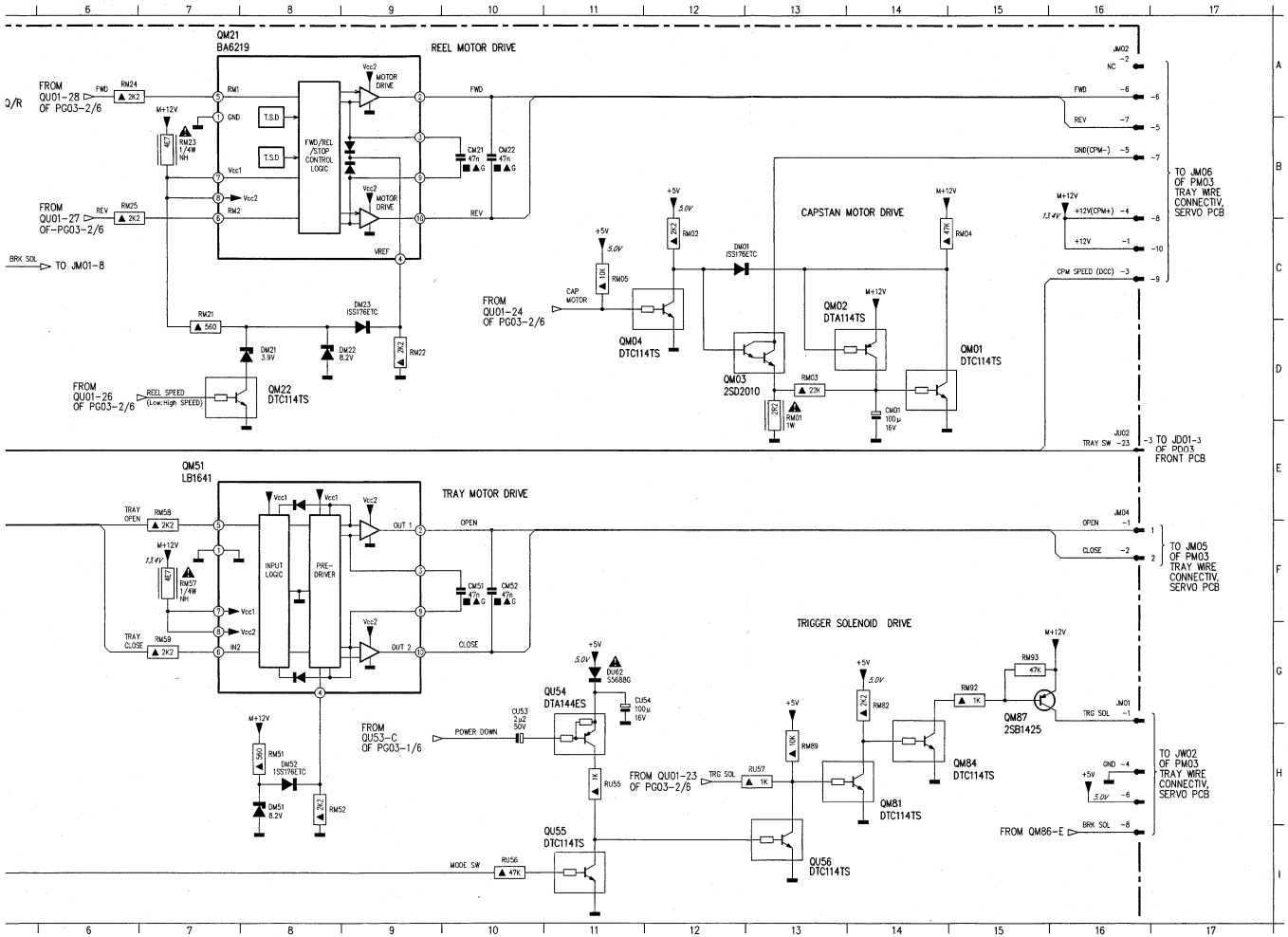

CM01	D14
CM21	B10
CM22	B10
CM51	F10
CM52	F10
CU53	H10
CU54	G11
DM01	C12
DM21	D8
DM22	D8
DM23	D9
DM51	H8
DM52	H8
DU62	G11
JA21-2	E2
JA21-31	C2
JM01-1	G16
JM01-2	H2
JM01-3	I2
JM01-4	H16
JM01-5	G2
JM01-6	H16
JM01-7	H2
JM01-8	I16
JM02-1	C16
JM02-2	A16
JM02-3	C16
JM02-4	B16
JM02-5	B16
JM02-6	A16
JM02-7	B16
JM03-1	D2
JM03-3	D2
JM04-1	F16
JM04-2	F16
JU02-23	E16
JU02-8	F2
JU02-9	F2
QM01	D14
QM02	D14
QM03	D13
QM04	C12
QM21	A8
QM22	D8
QM51	E8
QM61	H14
QM82	B4
QM83	C4
QM84	H14
QM85	A5
QM86	C5
QM87	G15
QR51	H4
QR52	G4
QU54	H11
QU55	I11
QU56	I13
RS73	G2
RS74	I2
RM01	D13
RM02	C12
RM03	D13
RM04	C14
RM05	C11
RM21	D7
RM22	D9
RM23	B7
RM24	A6
RM25	B6
RM51	H8
RM52	H8
RM54	D3
RM55	D3
RM56	D3
RM57	F7
RM58	F7
RM59	G7
RM62	G14
RM64	A4
RM66	B4
RM68	B5
RM69	H13
RM90	C3
RM91	B3
RM92	G15
RM93	G15
RR51	H4
RR52	F4
RU55	H11
RU56	I10
RU57	H13

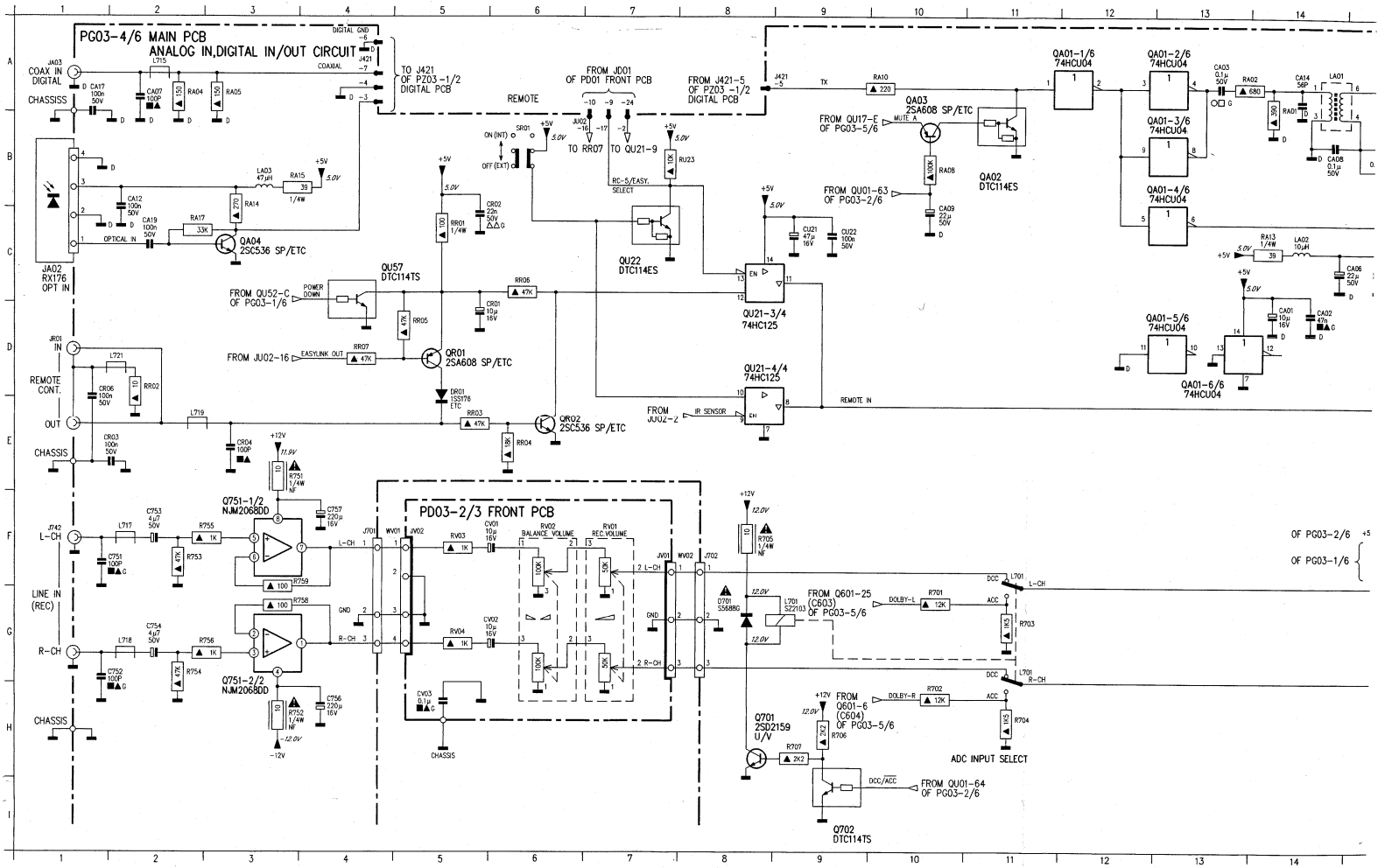
PG03-4/6 MAIN PCB
ANALOG IN,DIGITAL IN/OUT CIRCUIT
COAX IN DIGITAL
CHASSIS
OPTICAL IN
JA02 RX176 OPT IN
QA04 2SC536 SP/ETC
QU57 DTC114TS
FROM QU52-C OF PG03-1/6
POWER DOWN
FROM JU02-16
EASYLINK OUT
QR01 2SA608 SP/ETC
QR02 2SC536 SP/ETC
REMOTE CONT.
REMOTE
TO J421 OF PZ03-1/2 DIGITAL PCB
FROM JD01 OF PD01 FRONT PCB
TO RR07
TO QU21-9
RC-5/EASY. SELECT
QU22 DTC114ES
FROM J421-5 OF PZ03-1/2 DIGITAL PCB
FROM QU17-E OF PG03-5/6
MUTE A
QA03 2SA608 SP/ETC
QA02 DTC114ES
FROM QU01-63 OF PG03-2/6
QU21-3/4 74HC125
QU21-4/4 74HC125
FROM JU02-2
IR SENSOR
REMOTE IN
QA01-1/6 74HCU04
QA01-2/6 74HCU04
QA01-3/6 74HCU04
QA01-4/6 74HCU04
QA01-5/6 74HCU04
QA01-6/6 74HCU04
LA01
LA02
Q751-1/2 NJM2068DD
Q751-2/2 NJM2068DD
LINE IN (REC)
L-CH
R-CH
PD03-2/3 FRONT PCB
BALANCE VOLUME
REC.VOLUME
FROM Q601-25 (C603) OF PG03-5/6
FROM Q601-6 (C604) OF PG03-5/6
Q701 2SD2159 U/V
Q702 DTC114TS
ADC INPUT SELECT
FROM QU01-64 OF PG03-2/6
OF PG03-2/6
OF PG03-1/6

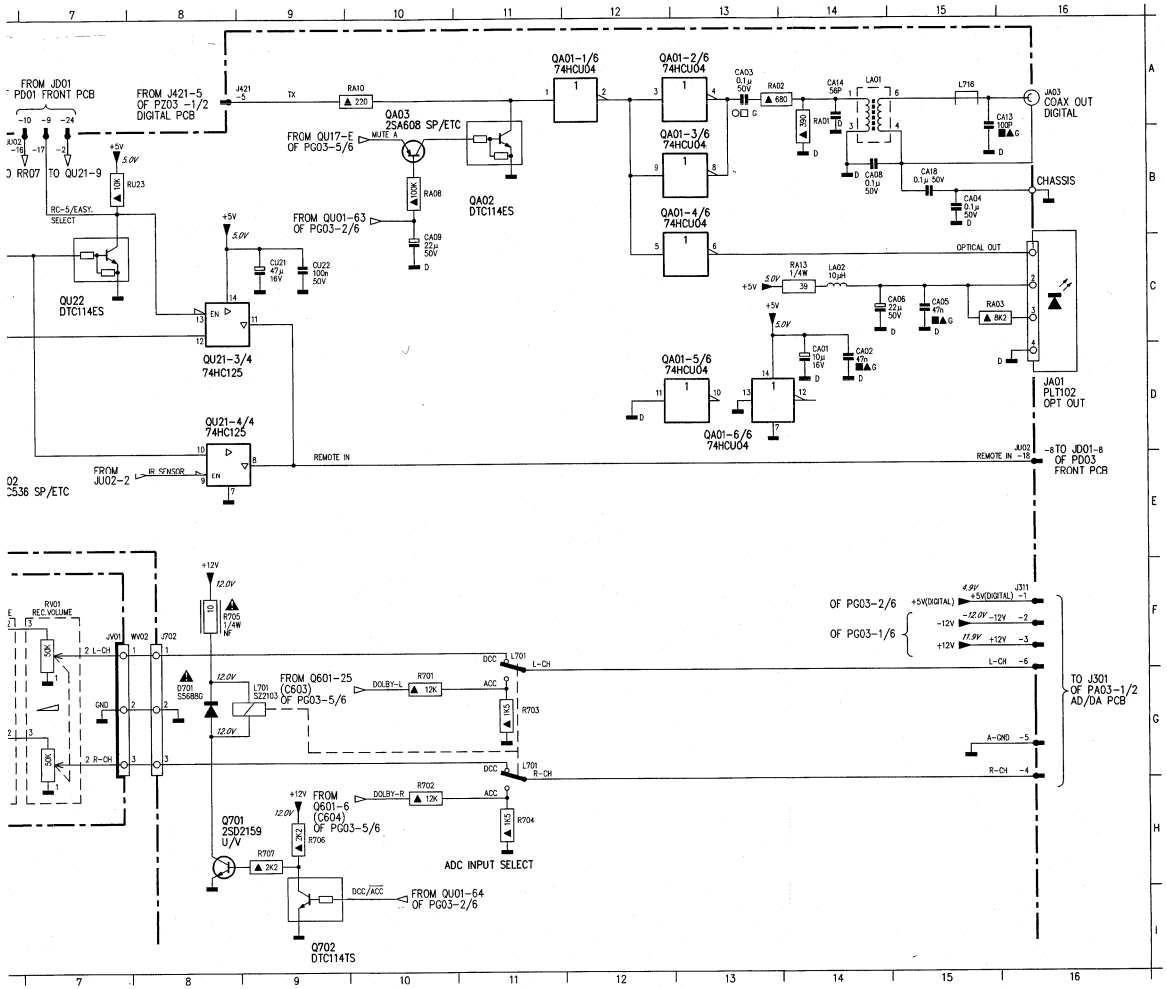

C751	F1	QU21-3/4	C8
C752	G1	QU21-4/4	E8
C753	F2	QU22	C7
C754	G2	QU57	C4
C756	H4	R701	G10
C757	F4	R702	H10
CA01	D14	R703	G11
CA02	D14	R704	H11
CA03	A13	R705	F8
CA04	B15	R706	H9
CA05	C15	R707	H9
CA06	C14	R751	E3
CA07	A2	R752	H3
CA08	B14	R753	F2
CA09	C10	R754	G2
CA12	B2	R755	F3
CA13	B15	R756	G3
CA14	A14	R758	G3
CA17	A1	R759	F3
CA18	B15	RA01	A14
CA19	C2	RA02	A13
CR01	D5	RA03	C15
CR02	C5	RA04	A2
CR03	E1	RA05	A3
CR04	E3	RA06	B10
CR06	E1	RA10	A10
CU21	C9	RA13	C14
CU22	C9	RA14	B3
CV01	F6	RA15	B3
CV02	G6	RA17	C2
CV03	6H	RR01	C5
D701	G8	RR02	D2
DR01	E5	RR03	E5
J311-1	F16	RR04	E6
J311-2	F16	RR05	D5
J311-3	F16	RR06	C6
J311-4	G16	RR07	D4
J311-5	G16	RU23	B7
J311-6	F16	RV01	F7
J421-3	A4	RV02	F6
J421-4	A4	RV03	E5
J421-5	A8	RV04	G5
J421-6	A4	SR01	B6
J421-7	A4	WV01	F4
J701	F4	WV02	F8
J702	F8		
J742	F1		
JA01-1	C16		
JA01-2	C16		
JA01-3	C16		
JA01-4	D16		
JA02-1	C1		
JA02-2	C1		
JA02-3	B1		
JA02-4	B1		
JA03	A1		
JA03	A16		
JR01	D1		
JU02-16	B7		
JU02-17	B7		
JU02-18	E16		
JU02-2	B7		
JV01	F7		
JV02	F5		
L701	G11		
L701	G9		
L715	A2		
L716	A15		
L717	F2		
L718	G2		
L719	E2		
L721	D2		
LA01	A14		
LA02	C14		
LA03	B3		
Q701	H8		
Q702	I9		
Q751-1/2	F3		
Q751-2/2	G3		
QA01-1/6	A12		
QA01-2/6	A13		
QA01-3/6	B13		
QA01-4/6	C13		
QA01-5/6	D13		
QA01-6/6	D13		
QA02	B11		
QA03	B10		
QA04	C3		
QR01	D5		
QR02	E6		

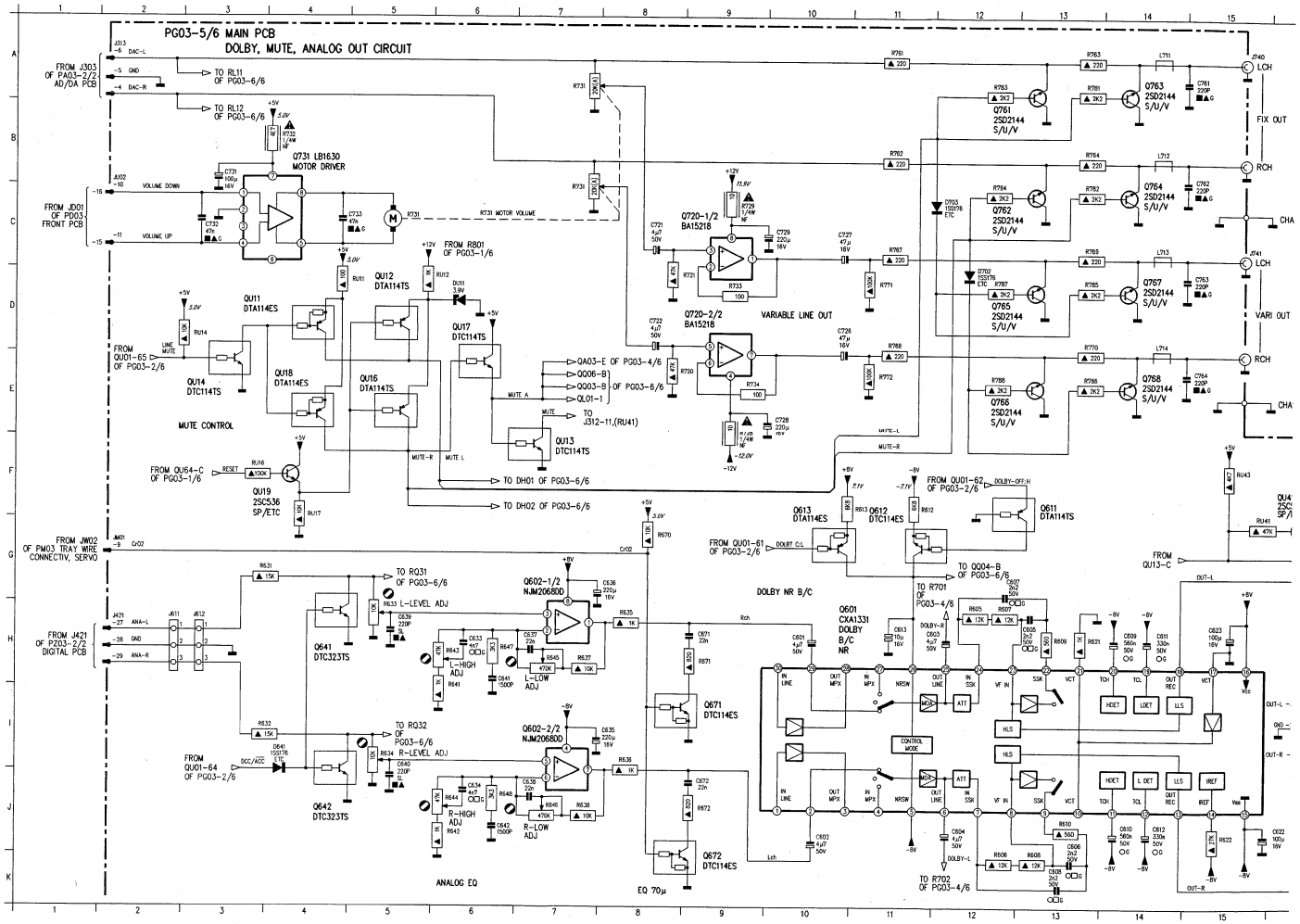
PG03-5/6 MAIN PCB
DOLBY, MUTE, ANALOG OUT CIRCUIT
FROM J303 OF PA03-2/2 AD/DA PCB
TO RL11 OF PG03-6/6
TO RL12 OF PG03-6/6
Q731 LB1630 MOTOR DRIVER
FROM JD01 OF PD03 FRONT PCB
VOLUME DOWN
VOLUME UP
R731 MOTOR VOLUME
FROM R801 OF PG03-1/6
QU11 DTA114ES
QU12 DTA114TS
QU17 DTC114TS
QU14 DTC114TS
QU18 DTA114ES
QU16 DTA114TS
QU13 DTC114TS
QU19 2SC536 SP/ETC
MUTE CONTROL
FROM QU01-65 OF PG03-2/6
FROM QU64-C OF PG03-1/6
TO DH01 OF PG03-6/6
TO DH02 OF PG03-6/6
Q720-1/2 BA15218
Q720-2/2 BA15218
VARIABLE LINE OUT
Q761 2SD2144 S/U/V
Q762 2SD2144 S/U/V
Q763 2SD2144 S/U/V
Q764 2SD2144 S/U/V
Q765 2SD2144 S/U/V
Q766 2SD2144 S/U/V
Q767 2SD2144 S/U/V
Q768 2SD2144 S/U/V
FIX OUT
VARI OUT
LCH
RCH
FROM JW02 OF PM03 TRAY WIRE CONNECTIV, SERVO
FROM J421 OF PZ03-2/2 DIGITAL PCB
TO RQ31 OF PG03-6/6
TO RQ32 OF PG03-6/6
L-LEVEL ADJ
L-HIGH ADJ
L-LOW ADJ
R-LEVEL ADJ
R-HIGH ADJ
R-LOW ADJ
Q641 DTC323TS
Q642 DTC323TS
Q602-1/2 NJM2068D
Q602-2/2 NJM2068D
ANALOG EQ
FROM QU01-64 OF PG03-2/6
FROM QU01-62 OF PG03-2/6
FROM QU01-61 OF PG03-2/6
Q613 DTA114ES
Q612 DTC114ES
Q611 DTA114TS
Q671 DTC114ES
Q672 DTC114ES
EQ 70μ
DOLBY NR B/C
Q601 CXA1331 DOLBY B/C NR
TO R701 OF PG03-4/6
TO R702 OF PG03-4/6
TO QQ04-B OF PG03-6/6
FROM QU13-C

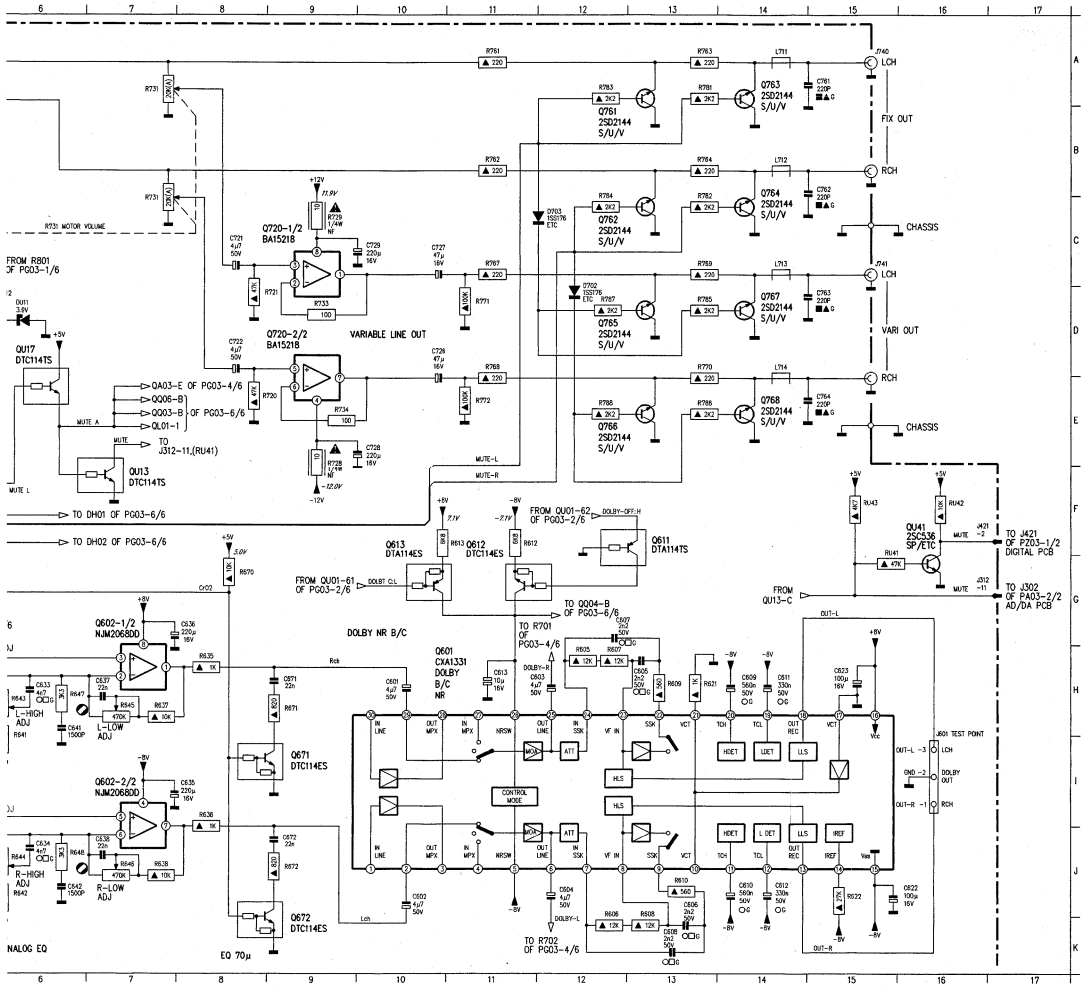

C601	H10	R605	H12
C602	J10	R606	K12
C603	H12	R607	H12
C604	J12	R608	K13
C605	H13	R609	H13
C606	K13	R610	J13
C607	G12	R612	F11
C608	K13	R613	F10
C609	H14	R621	H13
C610	J14	R622	J15
C611	H14	R631	G3
C612	J14	R632	I3
C613	H11	R633	H5
C622	J15	R634	I5
C623	H15	R635	H8
C633	H6	R636	I8
C634	J6	R637	H7
C635	I7	R638	J7
C636	G7	R641	H6
C637	H7	R642	J6
C638	J7	R643	H6
C639	H5	R644	J6
C640	J5	R645	H7
C641	H6	R646	J7
C642	J6	R647	H6
C671	H9	R648	J6
C672	J9	R670	G8
C721	C8	R671	H9
C722	D8	R672	J9
C726	D10	R720	E8
C727	C10	R721	C8
C728	E9	R728	E9
C729	C9	R729	C9
C731	B3	R731	C5
C732	C3	R732	B4
C733	C4	R733	D9
C761	A15	R734	E9
C762	B15	R761	A11
C763	D15	R762	B11
C764	E15	R763	A13
D641	I4	R764	B13
D702	D12	R767	C11
D703	C12	R768	D11
DU11	D6	R769	C13
JU12-11	G17	R770	D13
J313-4	A2	R771	D11
J313-5	A2	R772	E11
J313-6	A2	R781	A13
J421-2	F17	R782	C13
J421-27	H2	R783	A12
J421-28	H2	R784	C12
J421-29	H2	R785	D13
J601	I18	R786	E13
J611	H2	R787	D12
J612	H3	R788	E12
J740	A15	RU11	D4
J741	C15	RU12	D5
JM01-9	G2	RU14	D3
JU02-10	C2	RU16	F3
JU02-11	C2	RU17	F4
L711	A14	RU41	G15
L712	B14	RU42	F16
L713	C14	RU43	G15
L714	D14		
Q601	H10		
Q602-1/2	H7		
Q602-2/2	I7		
Q611	F12		
Q612	G11		
Q613	G10		
Q641	H4		
Q642	J4		
Q671	I8		
Q672	J8		
Q720-1/2	C9		
Q720-2/2	D9		
Q731	B4		
Q761	A13		
Q762	C13		
Q763	A14		
Q764	C14		
Q765	D13		
Q766	E13		
Q767	D14		
Q768	E14		
QU11	D4		
QU12	D5		
QU13	F7		
QU14	E3		
QU16	E5		
QU17	E6		
QU18	E4		
QU19	F4		
QU41	G16		

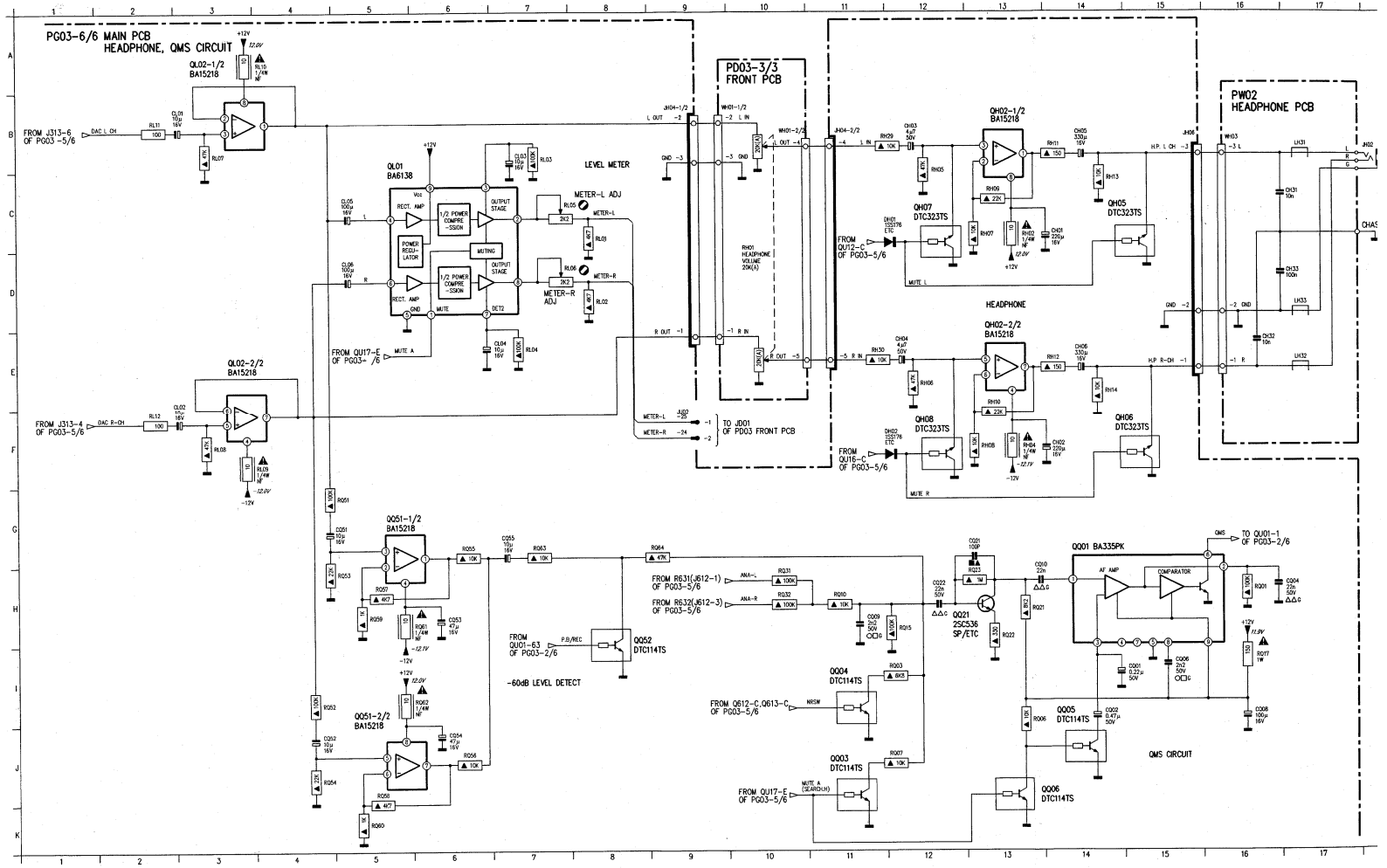
PG03-6/6 MAIN PCB
HEADPHONE, QMS CIRCUIT
PD03-3/3
FRONT PCB
PW02
HEADPHONE PCB
QL02-1/2
BA15218
QL01
BA6138
LEVEL METER
METER-L ADJ
METER-R ADJ
QL02-2/2
BA15218
QH02-1/2
BA15218
QH02-2/2
BA15218
QH07
DTC323TS
QH05
DTC323TS
QH08
DTC323TS
QH06
DTC323TS
HEADPHONE
QQ51-1/2
BA15218
QQ51-2/2
BA15218
QQ52
DTC114TS
-60dB LEVEL DETECT
QQ01 BA335PK
QQ21
2SC536
SP/ETC
QQ04
DTC114TS
QQ03
DTC114TS
QQ05
DTC114TS
QQ06
DTC114TS
QMS CIRCUIT
FROM J313-6
OF PG03-5/6
FROM J313-4
OF PG03-5/6
FROM QU17-E
OF PG03-6
FROM QU12-C
OF PG03-5/6
FROM QU16-C
OF PG03-5/6
TO JD01
OF PD03 FRONT PCB
TO QU01-1
OF PG03-2/6
FROM R631(J612-1)
OF PG03-5/6
FROM R632(J612-3)
OF PG03-5/6
FROM
QU01-63
OF PG03-2/6
FROM Q612-C,Q613-C
OF PG03-5/6
FROM QU17-E
OF PG03-5/6

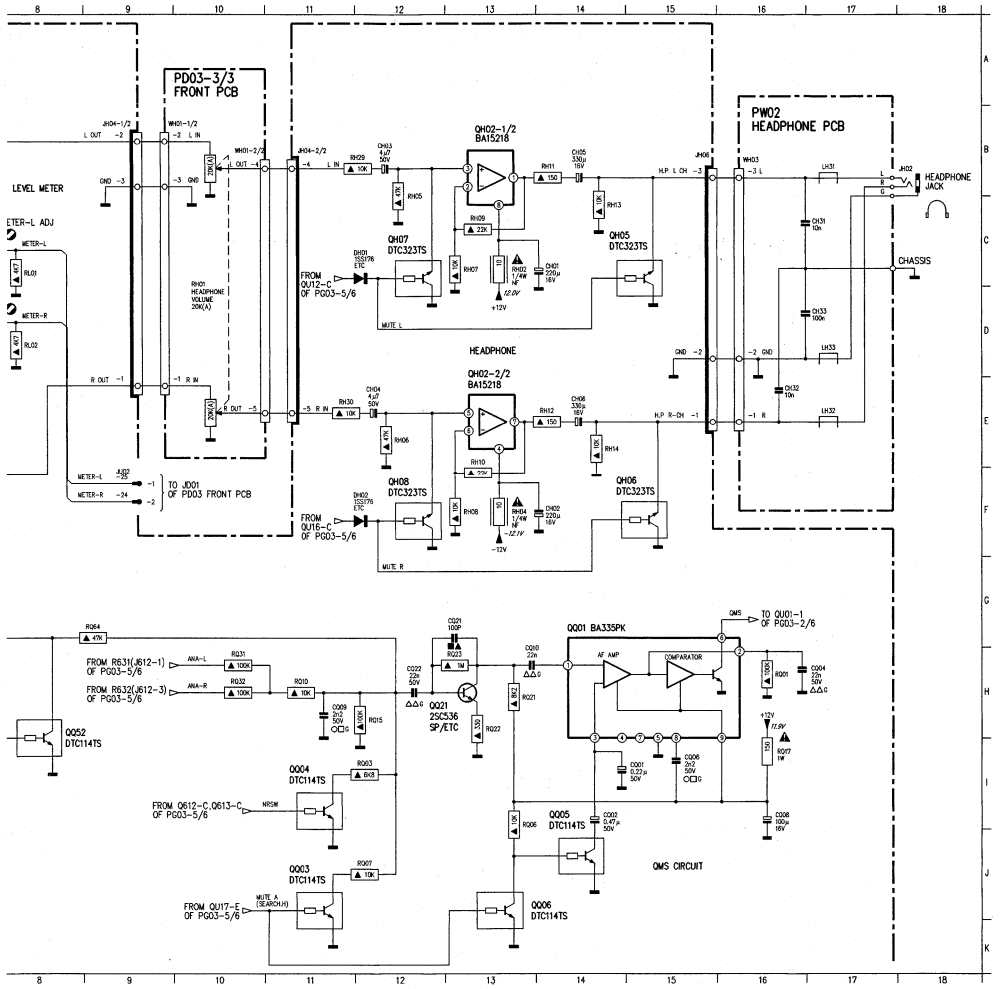

CH01	C14	LH32	E17	RL04	E7
CH02	F14	LH33	D17	RL05	C7
CH03	B12	QH02-1/2	B13	RL06	D7
CH04	E12	QH02-2/2	E13	RL07	B3
CH05	B14	QH05	C15	RL08	F3
CH06	E14	QH06	F15	RL09	F3
CH31	C16	QH07	C12	RL10	A3
CH32	E16	QH08	F12	RL11	B2
CH33	D16	QL01	C5	RL12	F2
CL01	B3	QL02-1/2	B3	RQ01	H16
CL02	F3	QL02-2/2	F3	RQ03	I12
CL03	B7	QQ01	H14	RQ06	I13
CL04	E8	QQ03	J11	RQ07	J12
CL05	C5	QQ04	I11	RQ10	H11
CL06	D5	QQ05	J14	RQ15	H12
CQ01	I14	QQ06	J13	RQ17	I16
CQ02	I14	QQ21	H13	RQ21	H13
CQ04	H16	QQ51-1/2	G5	RQ22	H13
CQ06	I15	QQ51-2/2	J5	RQ23	H13
CQ08	I16	QQ52	H8	RQ31	H10
CQ09	H11	RH01	B10	RQ32	H10
CQ10	H13	RH02	C13	RQ51	G4
CQ21	G13	RH04	F13	RQ52	I4
CQ22	H12	RH05	B12	RQ53	H4
CQ51	G4	RH06	E12	RQ54	J4
CQ52	J4	RH07	C13	RQ55	G6
CQ53	H6	RH08	F13	RQ56	J6
CQ54	J6	RH09	C13	RQ57	H5
CQ55	G7	RH10	F13	RQ58	K5
DH01	C12	RH11	B14	RQ59	H5
DH02	F12	RH12	E14	RQ60	K5
JH02	B18	RH13	C14	RQ61	H5
JH04	B9	RH14	E14	RQ62	I5
JH06	B15	RH29	B12	RQ63	G7
JH08	D15	RH30	E11	RQ64	G9
JU02-24	F9	RL01	C8	WH01	B10
JU02-25	F9	RL02	D8	WH03	B16
LH31	B17	RL03	B7	WH03	D16

HEADPHONE PCB (PW02)

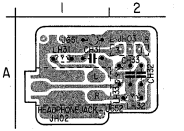

CH31	A-1
CH32	A-2
CH33	A-2
JH02	A-1
JH03	A-2
LH31	A-1
LH32	A-2
LH33	A-2
U651	A-1
U652	A-1

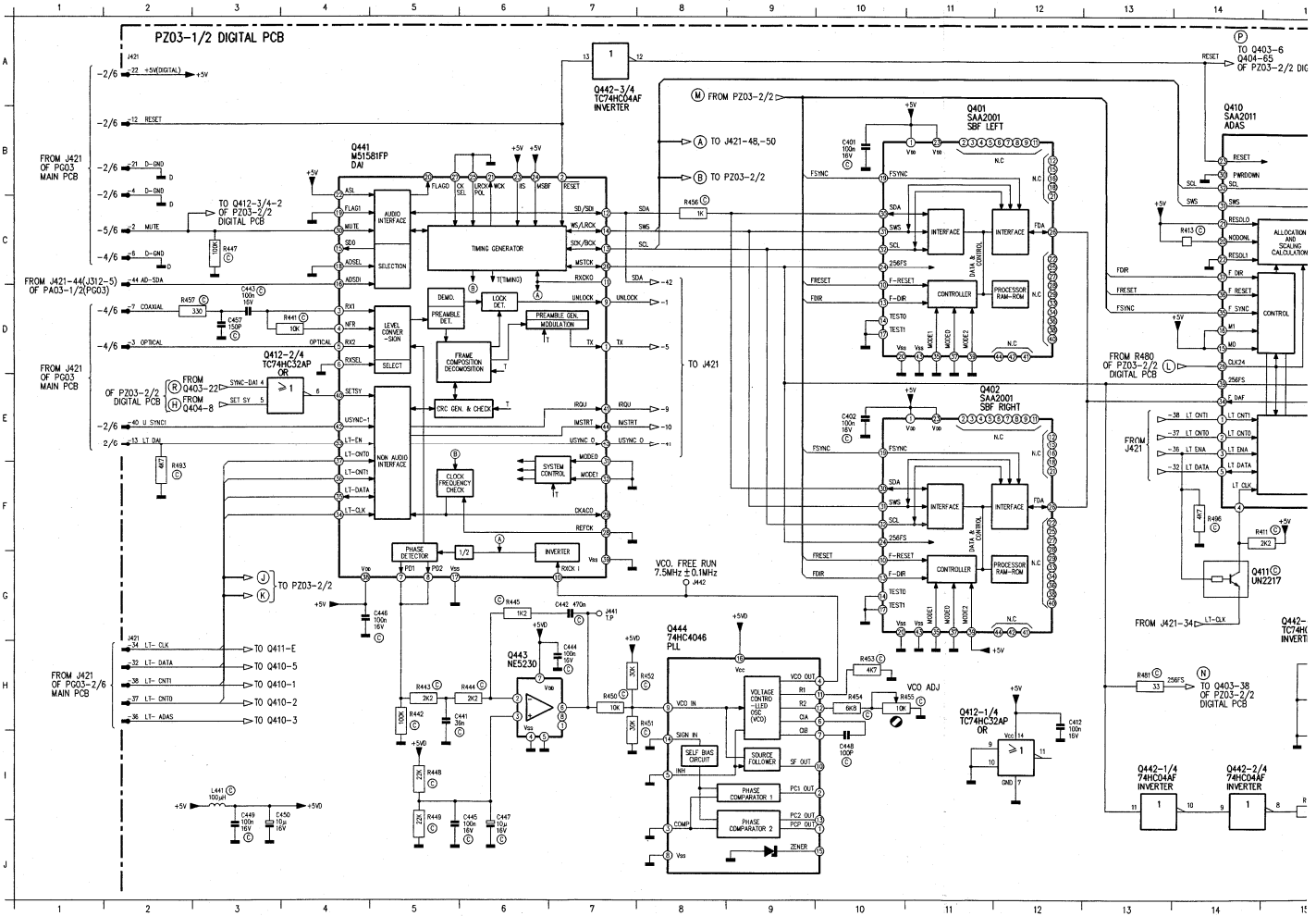
PZ03-1/2 DIGITAL PCB
Q441
M51581FP
DAI
AUDIO INTERFACE
SELECTION
TIMING GENERATOR
LEVEL CONVER -SION
SELECT
NON AUDIO INTERFACE
DEMO.
PREAMBLE DET.
LOCK DET.
PREAMBLE GEN. MODULATION
FRAME COMPOSITION DECOMPOSITION
CRC GEN. & CHECK
SYSTEM CONTROL
CLOCK FREQUENCY CHECK
PHASE DETECTOR
INVERTER
Q442-3/4
TC74HC04AF
INVERTER
Q401
SAA2001
SBF LEFT
Q402
SAA2001
SBF RIGHT
INTERFACE
CONTROLLER
PROCESSOR RAM-ROM
DATA & CONTROL
Q410
SAA2011
ADAS
ALLOCATION AND SCALING CALCULATION
CONTROL
Q411
UN2217
Q412-2/4
TC74HC32AP
OR
Q412-1/4
TC74HC32AP
OR
Q443
NE5230
Q444
74HC4046
PLL
VOLTAGE CONTRO -LLED OSC (VCO)
SELF BIAS CIRCUIT
SOURCE FOLLOWER
PHASE COMPARATOR 1
PHASE COMPARATOR 2
ZENER
VCO. FREE RUN
7.5MHz ±0.1MHz
VCO ADJ
Q442-1/4
74HC04AF
INVERTER
Q442-2/4
74HC04AF
INVERTER
FROM PZ03-2/2
TO J421-48,-50
TO PZ03-2/2
TO J421
TO Q403-6
Q404-65
OF PZ03-2/2 DIGI
FROM J421
OF PG03
MAIN PCB
FROM J421-44(J312-5)
OF PA03-1/2(PG03)
TO Q412-3/4-2
OF PZ03-2/2
DIGITAL PCB
FROM Q403-22
FROM Q404-8
OF PZ03-2/2
DIGITAL PCB
FROM R480
OF PZ03-2/2
DIGITAL PCB
FROM J421-34
TO Q411-E
TO Q410-5
TO Q410-1
TO Q410-2
TO Q410-3
TO Q403-38
OF PZ03-2/2
DIGITAL PCB

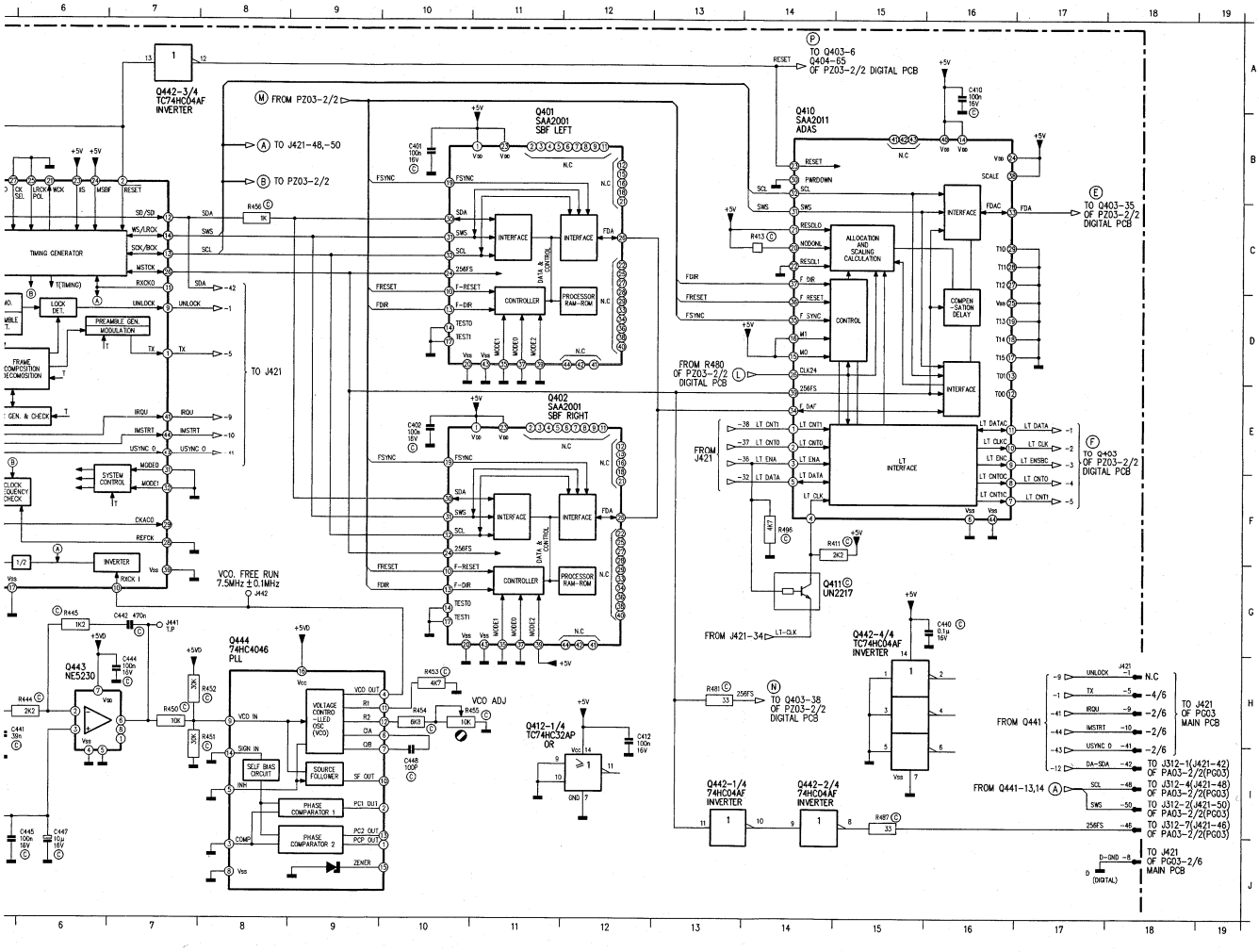

C401	B10
C402	E10
C410	A16
C412	H12
C440	G16
C441	H6
C442	G7
C443	D3
C444	H7
C445	J5
C446	G4
C447	J6
C448	I10
C449	J3
C450	J3
C457	D3
J421-1	H16
J421-10	H18
J421-12	B2
J421-13	E2
J421-2	C2
J421-21	B2
J421-22	A2
J421-3	D2
J421-32	H2
J421-34	H2
J421-36	H2
J421-37	H2
J421-38	H2
J421-4	B2
J421-40	E2
J421-41	H18
J421-42	I18
J421-44	C2
J421-46	I18
J421-48	I18
J421-5	H18
J421-50	I18
J421-6	C2
J421-7	D2
J421-8	J18
J421-9	H18
L441	I3
Q401	B11
Q402	E11
Q410	B14
Q411	G14
Q412-1/4	I12
Q412-2/4	E4
Q441	B4
Q442-1/4	I13
Q442-2/4	I14
Q442-3/4	A7
Q442-4/4	H15
Q443	H6
Q444	H6
R411	F14
R413	C14
R441	D4
R442	H5
R443	H5
R444	H6
R445	G6
R447	C3
R448	I5
R449	J5
R450	H7
R451	H7
R452	H7
R453	H10
R454	H10
R455	H10
R456	C6
R457	D3
R481	H13
R487	I15
R493	F2
R496	F14

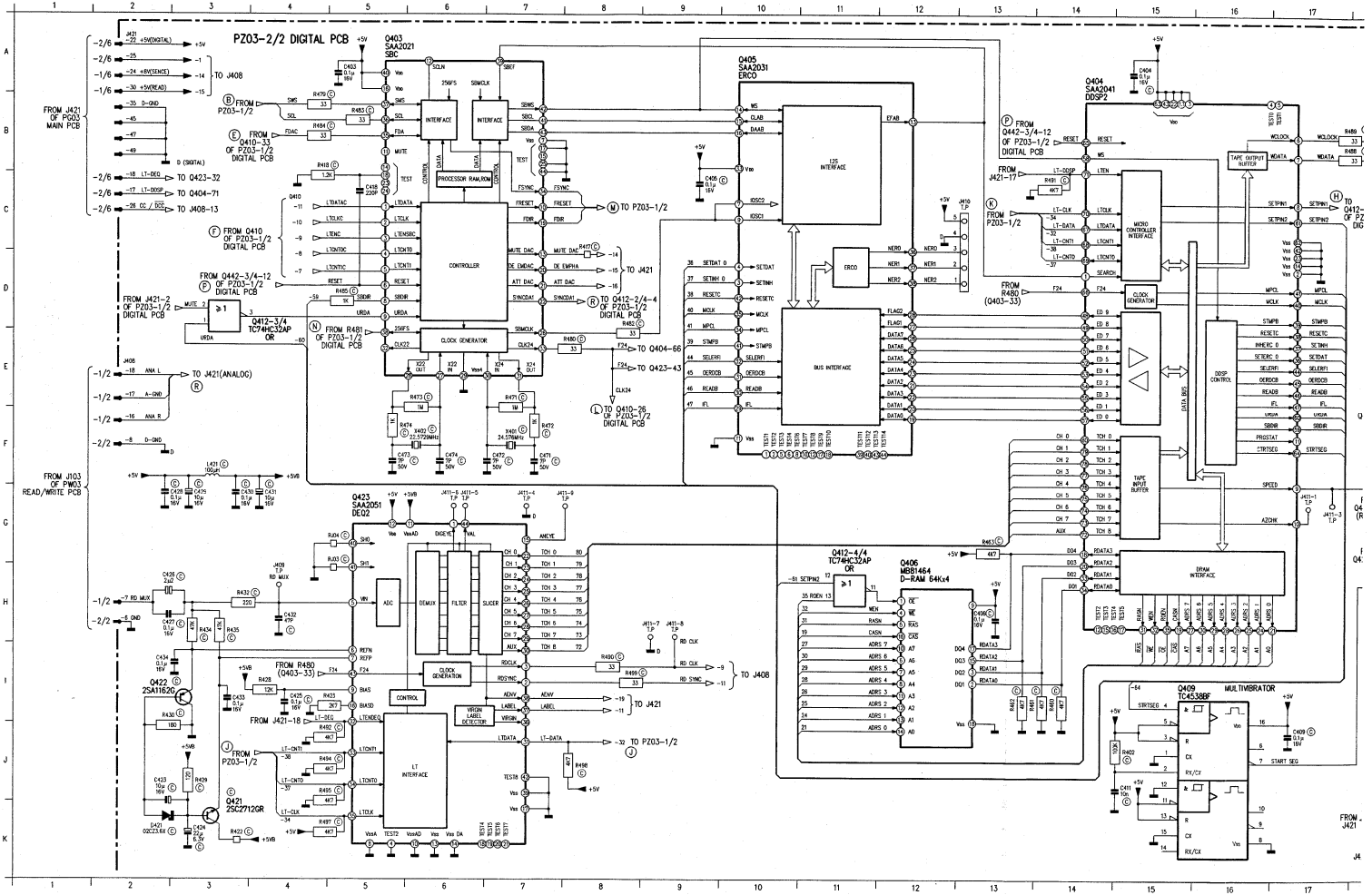
PZ03-2/2 DIGITAL PCB
Q403 SAA2021 SBC
Q405 SAA2031 ERCO
Q404 SAA2041 DDSP2
Q423 SAA2051 DEQ2
Q412-4/4 TC74HC32AP OR
Q406 MB81464 D-RAM 64Kx4
Q409 TC4538BF MULTIVIBRATOR
Q422 2SA1162G
Q421 2SC2712GR
Q412-3/4 TC74HC32AP OR
FROM J421 OF PG03 MAIN PCB
FROM J103 OF PW03 READ/WRITE PCB
TO J408
TO Q423-32
TO Q404-71
TO J408-13
TO J421(ANALOG)
FROM Q410-33 OF PZ03-1/2 DIGITAL PCB
FROM Q442-3/4-12 OF PZ03-1/2 DIGITAL PCB
FROM J421-2 OF PZ03-1/2 DIGITAL PCB
FROM R481 OF PZ03-1/2 DIGITAL PCB
TO PZ03-1/2
TO J421
TO Q412-2/4-4 OF PZ03-1/2 DIGITAL PCB
TO Q404-66
TO Q423-43
TO Q410-26 OF PZ03-1/2 DIGITAL PCB
FROM Q442-3/4-12 OF PZ03-1/2 DIGITAL PCB
FROM R480 (Q403-33)
FROM J421-17
FROM J421-18
TO PZ03-1/2
TO J408
TO J421
TO PZ03-1/2
INTERFACE
PROCESSOR RAM/ROM
CONTROLLER
CLOCK GENERATOR
I2S INTERFACE
ERCO
BUS INTERFACE
MICRO CONTROLLER INTERFACE
CLOCK GENERATOR
DDSP CONTROL
TAPE OUTPUT BUFFER
TAPE INPUT BUFFER
DRAM INTERFACE
DATA BUS
ADC
DEMUX
FILTER
SLICER
CLOCK GENERATOR
CONTROL
VIRGIN LABEL DETECTOR
LT INTERFACE

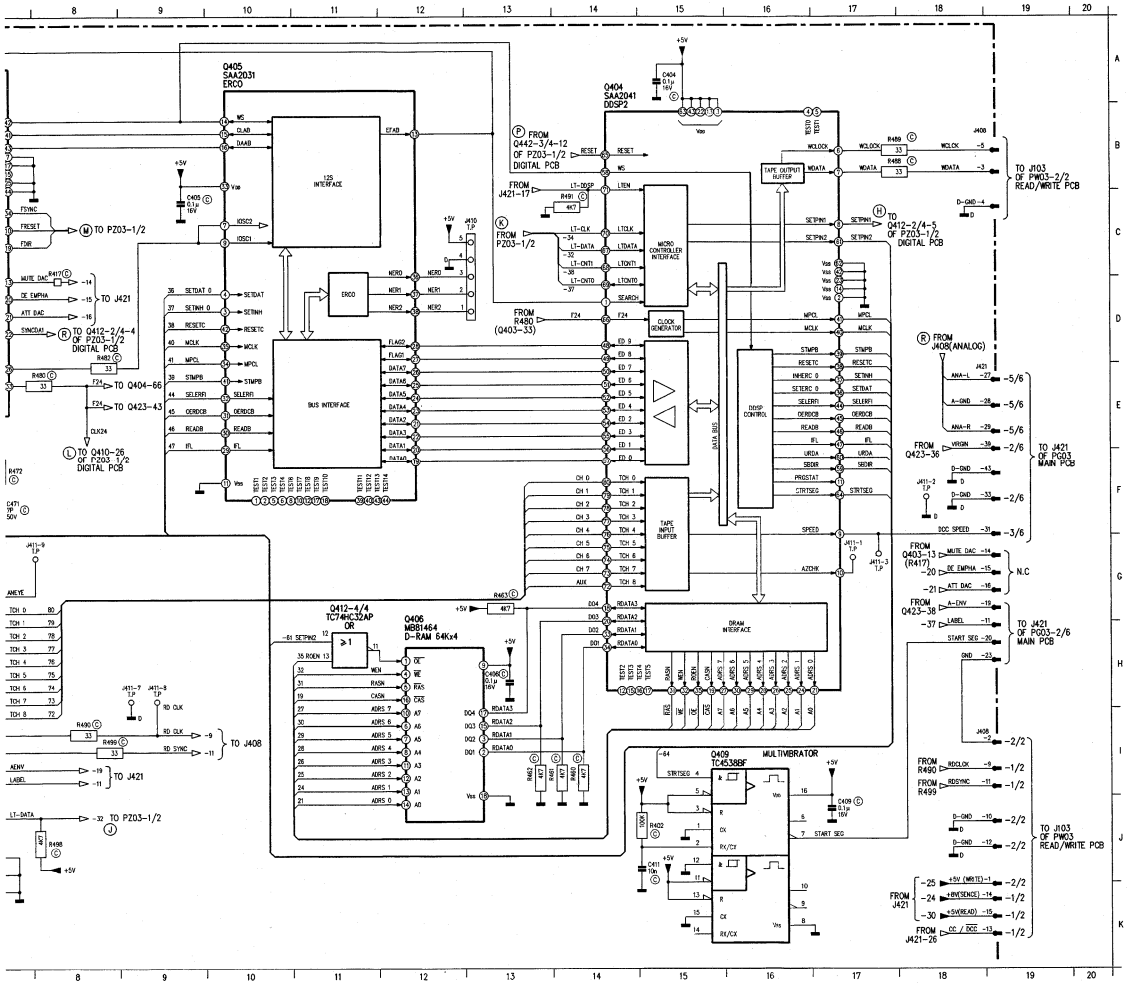

C403	A5	J421-26	C2
C404	A15	J421-27	E19
C405	C9	J421-28	E19
C406	H13	J421-29	E19
C409	J17	J421-30	A2
C411	J15	J421-31	F19
C418	C5	J421-33	F19
C423	J2	J421-35	B2
C424	K3	J421-39	E19
C425	I4	J421-43	F19
C426	H2	J421-45	B2
C427	H2	J421-47	B2
C428	G2	J421-49	B2
C429	G3	J421-8	F2
C430	G3	L421	F3
C431	G4	Q403	A5
C432	H4	Q404	B14
C433	I3	Q405	A10
C434	I3	Q406	H12
C471	F7	Q409	I16
C472	F7	Q412-3/4	D3
C473	F6	Q412-4/4	H11
C474	F6	Q421	K3
D421	K2	Q422	I3
J408-1	K19	Q423	G5
J408-10	J19	R402	J15
J408-13	K19	R417	D8
J408-14	K19	R418	C4
J408-15	K19	R422	K3
J408-17	E2	R423	I5
J408-18	E2	R428	I4
J408-2	I19	R429	J3
J408-3	B19	R432	K3
J408-4	C19	R434	H3
J408-5	B19	R435	H3
J408-6	H2	R460	I14
J408-7	H2	R461	I14
J408-9	I19	R462	I13
J409	H4	R463	G13
J409-11	I19	R471	E7
J409-12	J19	R472	F7
J410	C13	R473	E6
J411-1	G17	R474	F5
J411-2	F18	R476	I8
J411-3	G17	R479	B4
J411-4	G7	R480	E8
J411-5	G6	R482	E8
J411-6	G6	R483	B5
J411-7	H9	R484	B4
J411-8	H9	R485	D5
J411-9	G8	R488	B17
J421-11	H19	R489	B17
J421-14	G19	R490	I8
J421-15	G19	R491	C14
J421-16	F2	R492	J4
J421-19	G19	R494	J4
J421-17	C2	R495	J4
J421-18	C2	R497	K4
J421-19	G19	R498	J8
J421-20	H19	R499	I8
J421-22	A2	RJ03	H5
J421-23	H19	RJ04	G5
J421-24	A2	X401	F7
J421-25	A2	X402	F6

DIGITAL PCB A SIDE (PZ03)

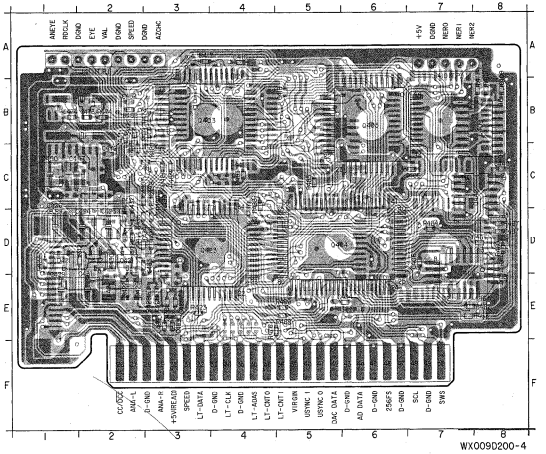

C403	C4	Q406	D7
C404	E6	Q409	B8
C405	C7	Q421	D2
C406	D7	Q422	D2
C409	B8	Q423	D3
C410	A4	Q442	C8
C411	B8	R402	B8
C418	B5	R417	A3
C423	D2	R418	A3
C424	D2	R421	D2
C425	E3	R422	E2
C426	D1	R423	E3
C427	D1	R428	E3
C428	E3	R429	E2
C429	E1	R430	D2
C430	E3	R432	D2
C431	E2	R434	D2
C432	D2	R435	D2
C433	D2	R438	D3
C434	D2	R460	D8
C440	C8	R461	D8
C447	C1	R462	E7
C450	C1	R463	E7
C471	B2	R464	D7
C472	C2	R471	B3
C473	B2	R472	B2
C474	B1	R473	B3
C480	C2	R474	B2
C481	C3	R475	E5
C482	B2	R480	C3
C487	D8	R481	C3
C488	E3	R482	B2
C489	E3	R483	C3
C490	C2	R485	C5
C499	C3	R487	D8
D421	D1	R488	E5
J410	A7	R489	E5
J411	A2	R490	D2
L421	E2	R498	C4
Q403	B3	R499	D3
Q404	D5	X401	B2
Q405	B6	X402	B2

MIDDLE LAYER PATTERN

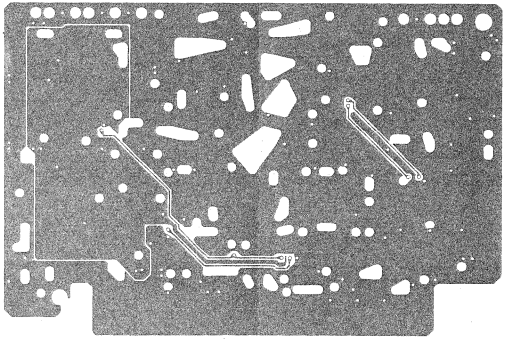

MIDDLE LAYER PATTERN

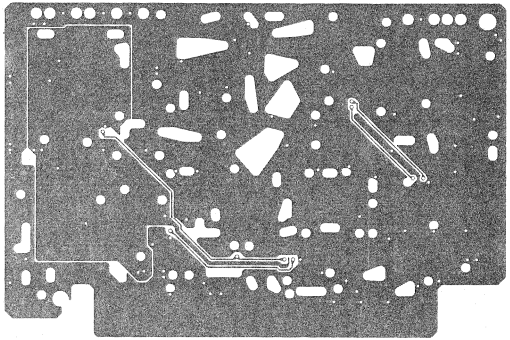

DIGITAL PCB B SIDE (PZ03)

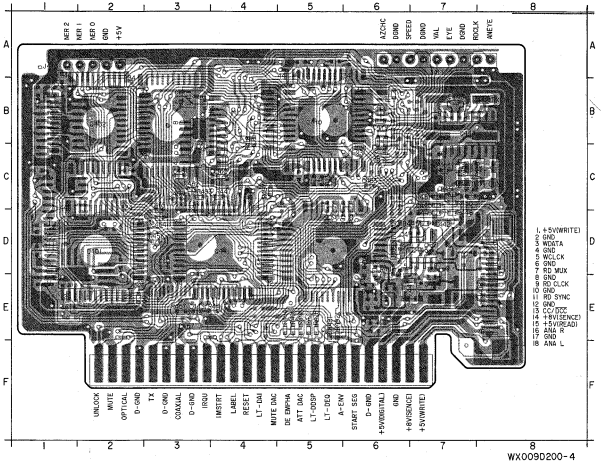

C401	E2	R411	B3
C402	A1	R412	C5
C412	C4	R413	C5
C441	D6	R415	B6
C442	D7	R416	B4
C443	E3	R441	E4
C444	E7	R442	D6
C445	C7	R443	E6
C446	D3	R444	D6
C448	B7	R445	D7
C449	C7	R447	C4
C451	C3	R450	C7
C452	C3	R451	C7
C453	C3	R452	C7
C454	D3	R453	C7
C455	C3	R454	C7
C457	E3	R455	C7
C459	B6	R456	B6
C463	C8	R457	E3
C464	B6	R477	E5
J408	E8	R478	E5
J409	D6	R479	B6
J410	A2	R484	B6
J411	A7	R491	E5
J441	C7	R492	E5
J442	B8	R493	C3
L441	E8	R494	E5
Q401	D2	R495	E5
Q402	B2	R496	E5
Q410	B5	R497	C4
Q411	B3	RJ01	C6
Q412	B3	RJ02	C5
Q441	D4	RJ03	C6
Q443	D7	RJ04	C5
Q444	B7		

READ WRITE PCB A SIDE (PW03)

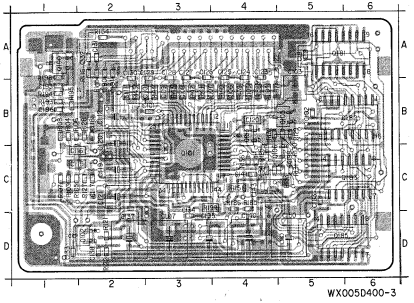

C101	B3	Q101	C3
C103	B5	Q102	D2
C104	B4	Q105	B5
C105	B4	Q106	C4
C106	B4	Q153	B4
C107	B3	Q161	A5
C108	B3	Q182	B6
C109	B3	Q183	C6
C110	B3	Q185	D5
C111	B2	Q190	A1
C112	B2	R103	C1
C115	C1	R104	B1
C116	C1	R105	C1
C117	C2	R106	B1
C118	B2	R107	C1
C119	C2	R108	B1
C120	B2	R115	A2
C120	B4	R116	A2
C121	C2	R121	D2
C122	A4	R122	D2
C123	A4	R125	C4
C124	A4	R127	C2
C125	A4	R128	B2
C126	A3	R129	B5
C127	A3	R130	B5
C128	A3	R131	C5
C129	A3	R132	B4
C130	A2	R133	C5
C131	A2	R134	C4
C132	A2	R136	C4
C133	D1	R137	B4
C134	D3	R138	B4
C135	D3	R139	B4
C137	D2	R140	B4
C138	D2	R141	B3
C140	D4	R142	B3
C141	C4	R143	B3
C143	C4	R144	B3
C150	D5	R145	B2
C161	A5	R151	C4
C182	B5	R154	A2
C183	C5	R185	C4
C192	A2	R186	C4
C191	A2	R193	B1
C193	B1	R194	B1
C196	B1	R195	B1
C197	D3	R196	A1
C198	C4	R199	C3

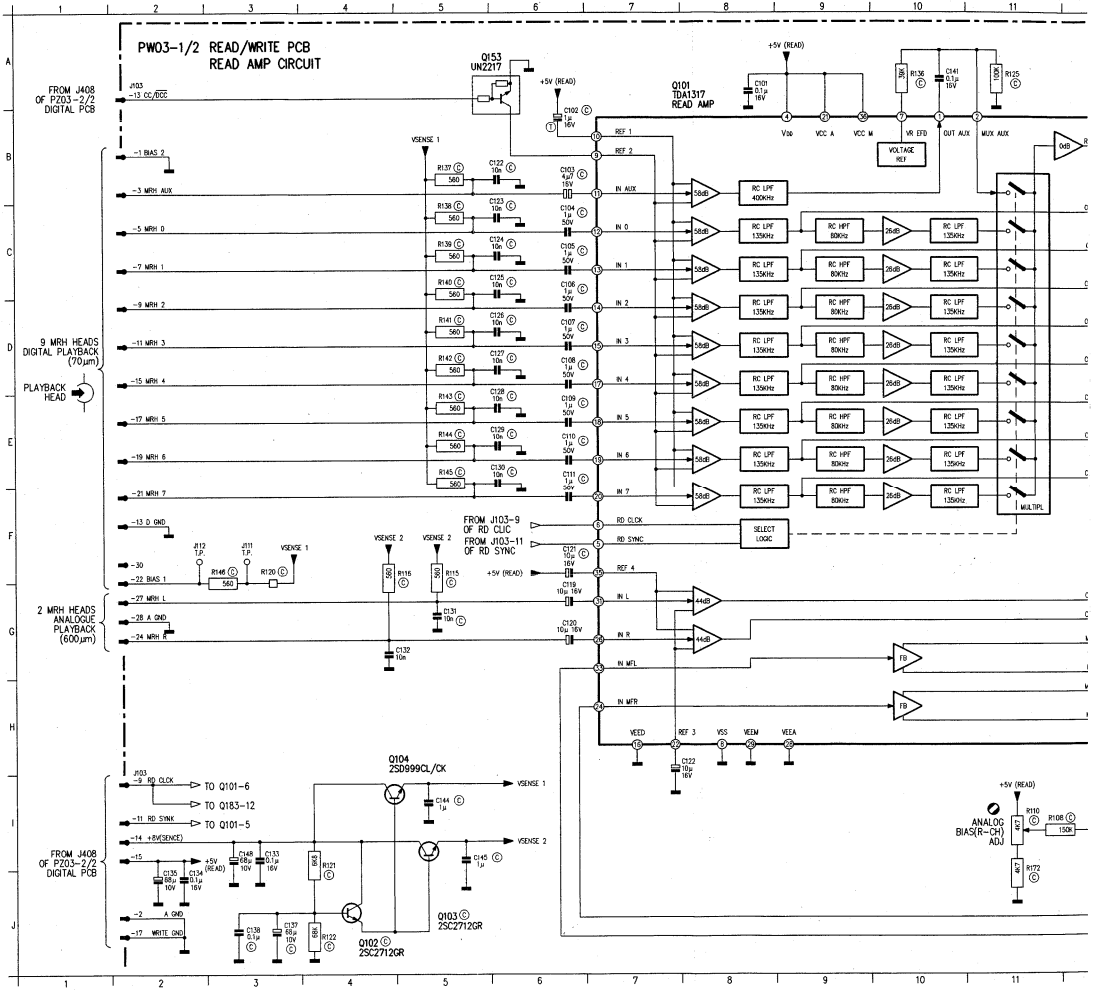

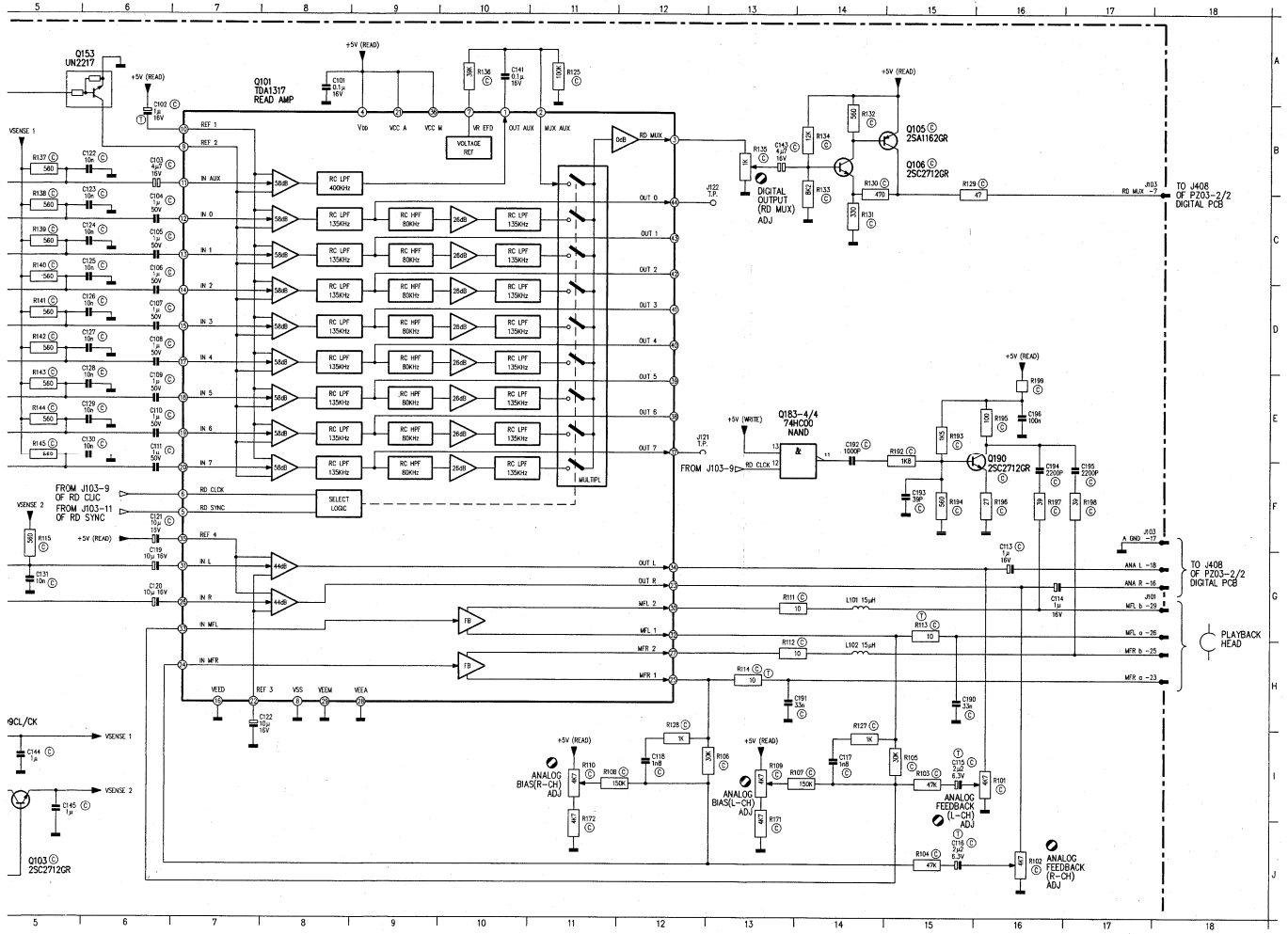

C101	A8	J103-3	B2
C102	B6	J103-30	F2
C103	B6	J103-8	C2
C104	C6	J103-7	B18
C105	C6	J103-7	C2
C106	D6	J103-9	D2
C107	D6	J103-9	I2
C108	D6	J111	F3
C109	E6	J112	F2
C110	E6	J121	E12
C111	E6	J122	C13
C113	G18	L101	G14
C114	G18	L102	H14
C115	I15	Q101	B7
C116	J15	Q102	J4
C117	I14	Q103	I5
C118	I12	Q104	I4
C119	G6	Q105	B15
C120	G6	Q106	B14
C121	F6	Q153	A6
C122	B6	Q183-4/4	E14
C122	H7	Q190	E16
C123	C6	R101	I16
C124	C6	R102	J16
C125	C6	R103	I15
C126	D6	R104	J15
C127	D6	R105	I15
C128	E6	R106	I13
C129	E6	R107	I14
C130	E6	R108	I11
C131	G5	R109	I13
C132	G4	R110	I11
C133	I3	R111	G13
C134	J2	R112	H13
C135	J2	R113	G15
C137	J3	R114	H13
C138	J3	R115	F5
C141	A10	R119	F4
C143	B13	R120	F3
C144	I5	R121	I4
C145	I5	R122	J4
C148	I3	R125	A11
C190	H15	R127	I14
C191	H13	R128	I12
C192	E14	R129	B15
C193	F15	R130	B14
C194	F16	R131	C14
C195	F17	R132	B14
C196	E16	R133	B14
J103-1	B2	R134	B14
J103-11	D2	R135	B13
J103-11	I2	R136	A10
J103-13	A2	R137	B5
J103-13	F2	R138	C5
J103-14	I2	R139	C5
J103-15	D2	R140	C5
J103-15	I2	R141	D5
J103-16	G18	R142	D5
J103-17	E2	R143	E5
J103-17	F18	R144	E5
J103-17	J2	R145	E5
J103-18	G18	R146	F3
J103-19	E2	R171	J13
J103-2	J2	R172	J11
J103-21	F2	R192	E15
J103-22	F2	R193	E15
J103-23	H18	R194	F15
J103-24	G2	R195	E16
J103-25	H18	R196	F16
J103-26	G18	R197	F16
J103-27	G2	R198	F17
J103-28	G2	R199	E16
J103-29	G18		

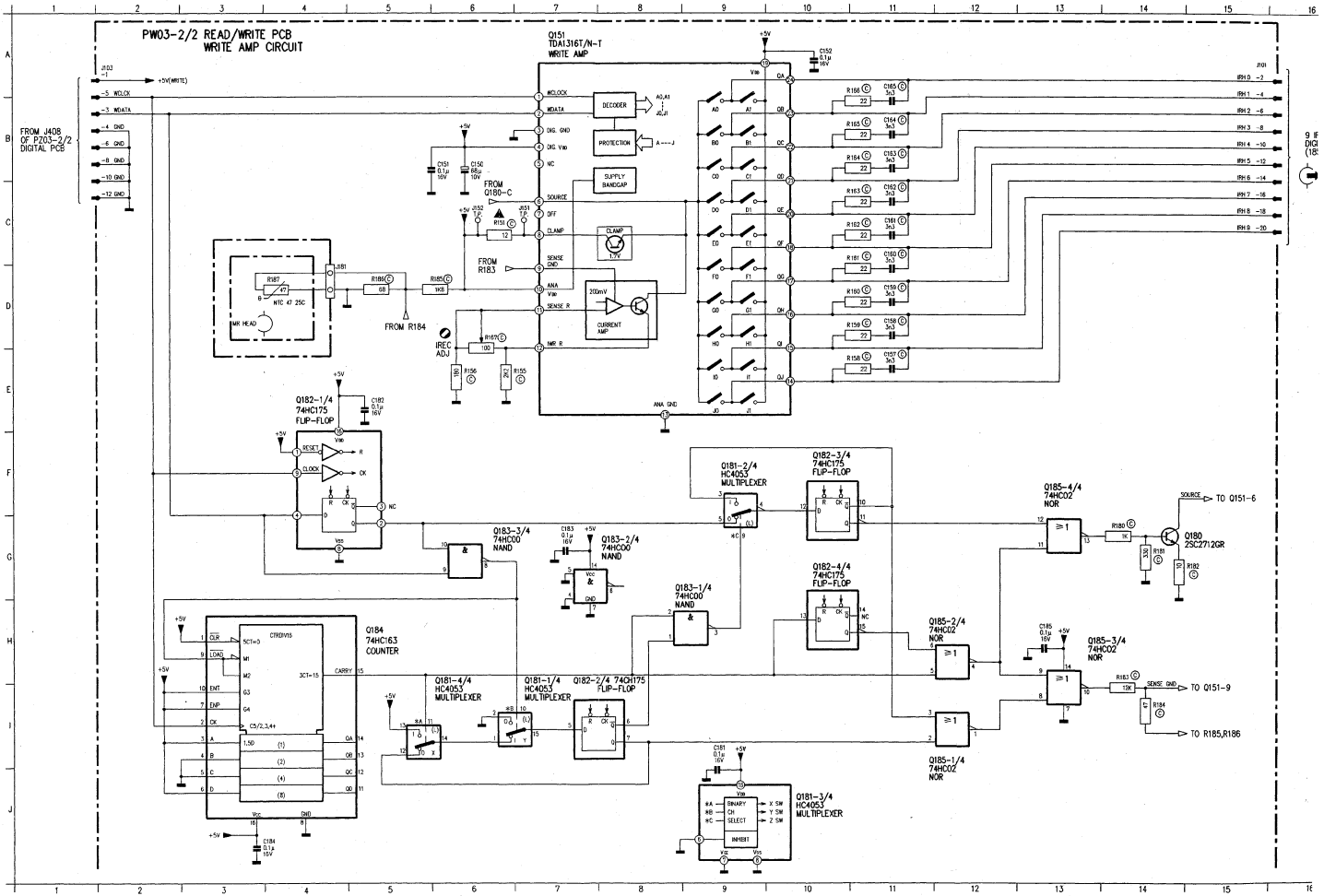
PW03-2/2 READ/WRITE PCB
WRITE AMP CIRCUIT
Q151
TDA1316T/N-T
WRITE AMP
FROM J408 OF PZ03-2/2 DIGITAL PCB
J203
+5V(WRITE)
WCLOCK
WDATA
GND
DECODER
PROTECTION
SUPPLY BANDGAP
CLAMP
CURRENT AMP
200mV
FROM Q180-C
FROM R183
FROM R184
IREC ADJ
MR HEAD
NTC 47 25C
Q182-1/4
74HC175
FLIP-FLOP
Q181-2/4
HC4053
MULTIPLEXER
Q182-3/4
74HC175
FLIP-FLOP
Q183-3/4
74HC00
NAND
Q183-2/4
74HC00
NAND
Q183-1/4
74HC00
NAND
Q182-4/4
74HC175
FLIP-FLOP
Q185-4/4
74HC02
NOR
Q180
2SC2712GR
TO Q151-6
Q184
74HC163
COUNTER
Q181-4/4
HC4053
MULTIPLEXER
Q181-1/4
HC4053
MULTIPLEXER
Q182-2/4 74HC175
FLIP-FLOP
Q185-2/4
74HC02
NOR
Q185-3/4
74HC02
NOR
Q185-1/4
74HC02
NOR
TO Q151-9
TO R185,R186
Q181-3/4
HC4053
MULTIPLEXER
BINARY
CH
SELECT
INHIBIT
X SW
Y SW
Z SW

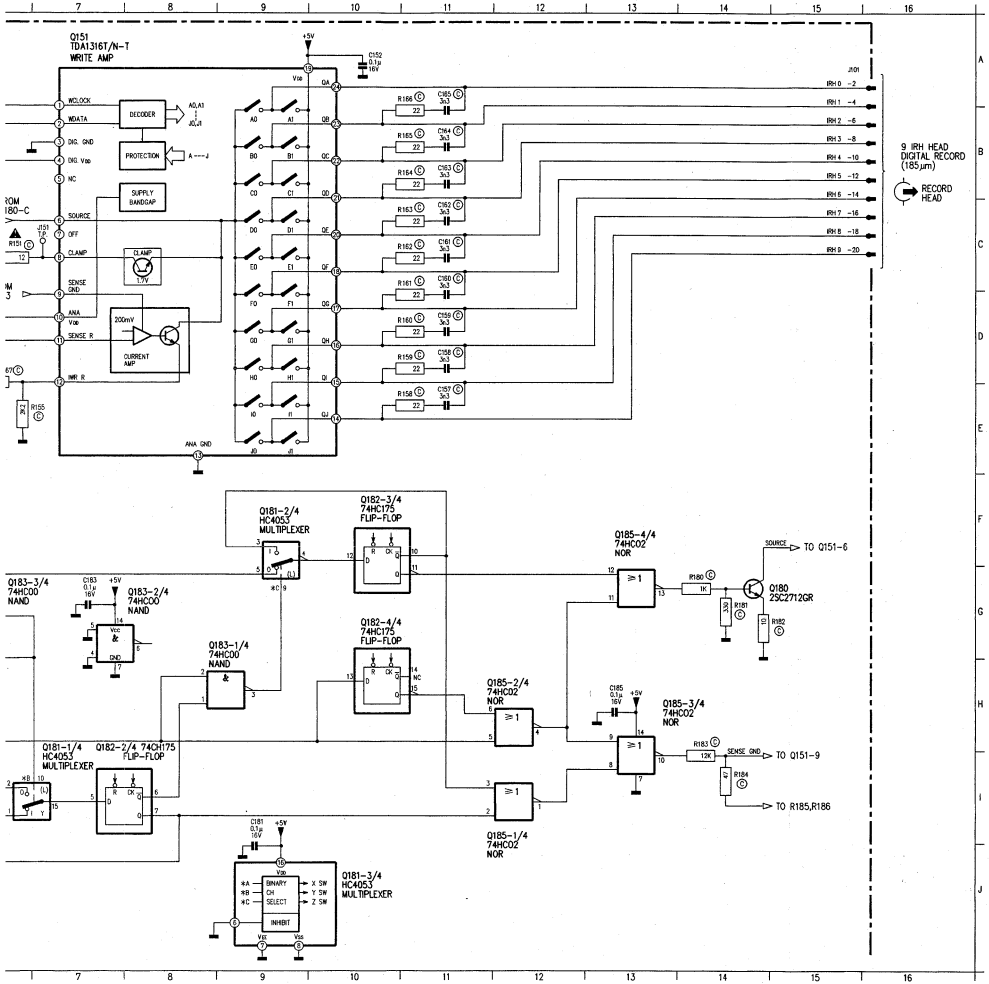

C113	D6	C195	B6	R109	D6	R163	C4
C114	D6	J101	B4	R110	D6	R164	B3
C144	D5	J103	C2	R111	C5	R165	C3
C145	D5	J111	C6	R112	C5	R166	B3
C151	D4	J112	C6	R113	C5	R167	D4
C152	C4	J121	D5	R114	C5	R171	C6
C157	B4	J122	D5	R117	C6	R172	C6
C158	C4	J151	D4	R120	C6	R180	D3
C159	B4	J152	D4	R135	D3	R181	D3
C160	C4	J181	B6	R146	C6	R182	D3
C161	B4	L101	B5	R152	D4	R183	E3
C162	C3	L102	B5	R153	D4	R184	E3
C163	B3	Q103	E6	R155	D4	R188	D3
C164	C3	Q104	E5	R156	D4	R192	C6
C165	B3	Q151	C4	R158	B4	R197	B6
C184	B3	Q180	D3	R159	C4	R198	B6
C185	E2	Q184	B2	R160	B4		
C192	C6	R101	D6	R161	C4		
C194	B6	R102	C6	R162	B4		

READ/WRITE PCB B SIDE (PW03)

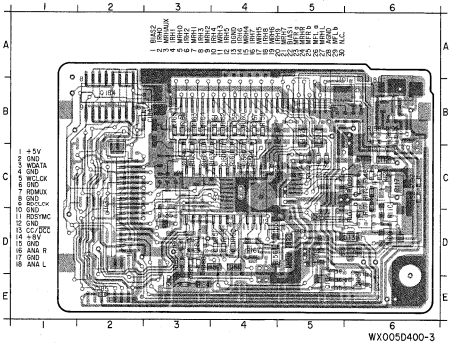

C150	B8	J101-16	C16	Q180	G14	R156	E6
C151	B6	J101-18	C16	Q181-1/4	I7	R158	E11
C152	A10	J101-2	A16	Q181-2/4	F9	R159	D11
C157	E11	J101-20	C16	Q181-3/4	J9	R160	D11
C158	D11	J101-4	A16	Q181-4/4	I5	R161	D11
C159	D11	J101-6	B16	Q182-1/4	F4	R162	C11
C160	D11	J101-8	B16	Q182-2/4	I7	R163	C11
C161	C11	J103-1	A2	Q182-3/4	F10	R164	B11
C162	C11	J103-10	C2	Q182-4/4	H10	R165	B11
C163	B11	J103-12	C2	Q183-1/4	H9	R166	B11
C164	B11	J103-3	B2	Q183-2/4	G7	R167	D6
C165	B11	J103-4	B2	Q183-3/4	G6	R180	G14
C182	E5	J103-5	A2	Q184	H3	R181	G14
C183	G7	J103-6	B2	Q185-1/4	I12	R182	G14
C184	J3	J103-8	B2	Q185-2/4	H12	R183	I14
C185	H13	J151	C7	Q185-3/4	I13	R184	I14
J101-10	B16	J152	C6	Q185-4/4	G13	R185	D6
J101-12	B16	J181	D4	R151	C6	R186	D5
J101-14	B16	Q151	J7	R155	E6	R187	D4

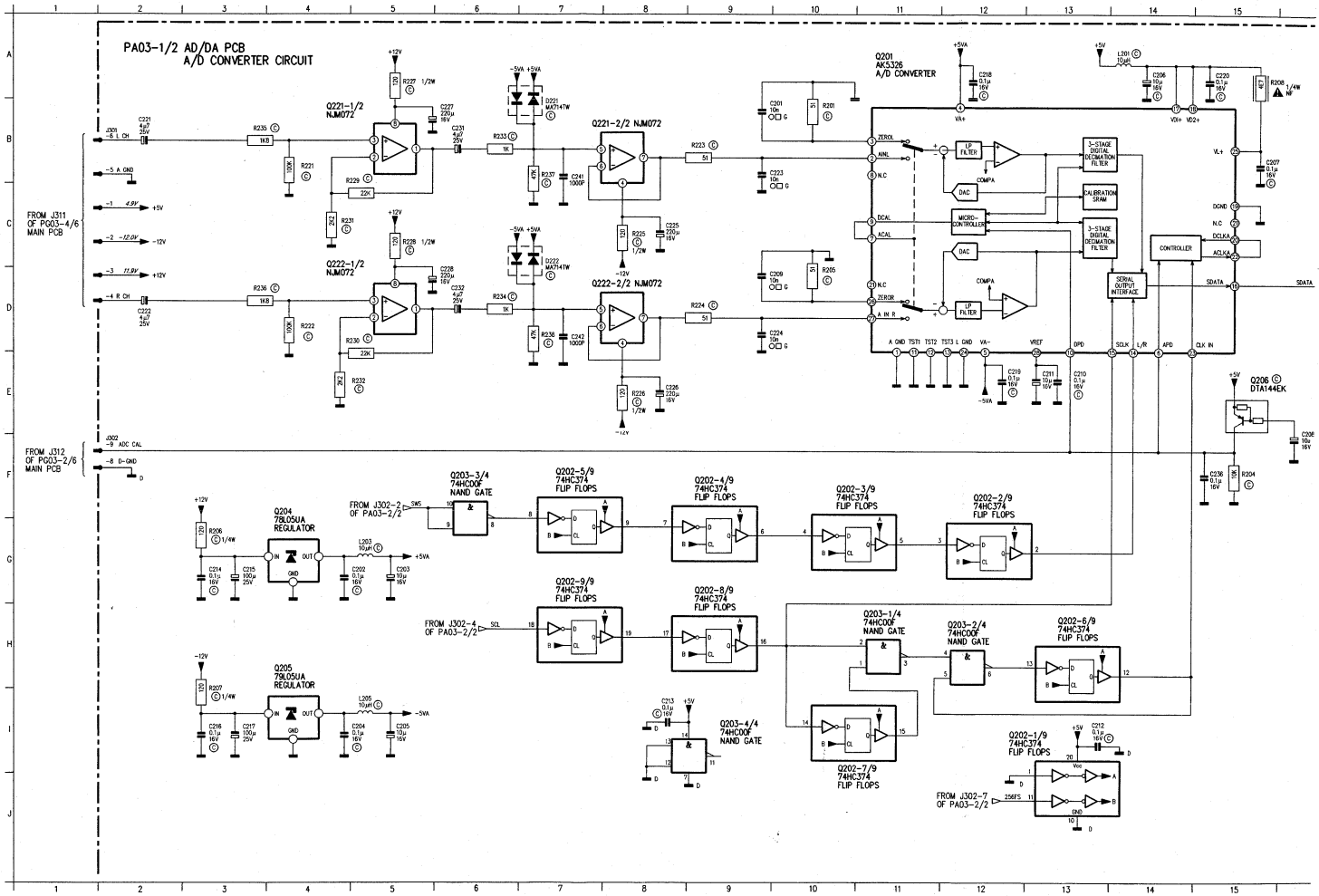
PA03-1/2 AD/DA PCB
A/D CONVERTER CIRCUIT
FROM J311 OF PC03-4/6 MAIN PCB
FROM J312 OF PC03-2/6 MAIN PCB
Q221-1/2 NJM072
Q222-1/2 NJM072
Q221-2/2 NJM072
Q222-2/2 NJM072
Q201 AK5326 A/D CONVERTER
LP FILTER
DAC
COMPA
MICRO-CONTROLLER
3-STAGE DIGITAL DECIMATION FILTER
CALIBRATION SRAM
CONTROLLER
SERIAL OUTPUT INTERFACE
Q206 DTA144EK
Q204 78L05UA REGULATOR
Q205 79L05UA REGULATOR
Q203-3/4 74HC00F NAND GATE
Q202-5/9 74HC374 FLIP FLOPS
Q202-4/9 74HC374 FLIP FLOPS
Q202-3/9 74HC374 FLIP FLOPS
Q202-2/9 74HC374 FLIP FLOPS
Q202-9/9 74HC374 FLIP FLOPS
Q202-8/9 74HC374 FLIP FLOPS
Q203-1/4 74HC00F NAND GATE
Q203-2/4 74HC00F NAND GATE
Q202-6/9 74HC374 FLIP FLOPS
Q203-4/4 74HC00F NAND GATE
Q202-7/9 74HC374 FLIP FLOPS
Q202-1/9 74HC374 FLIP FLOPS
FROM J302-2 OF PA03-2/2
FROM J302-4 OF PA03-2/2
FROM J302-7 OF PA03-2/2

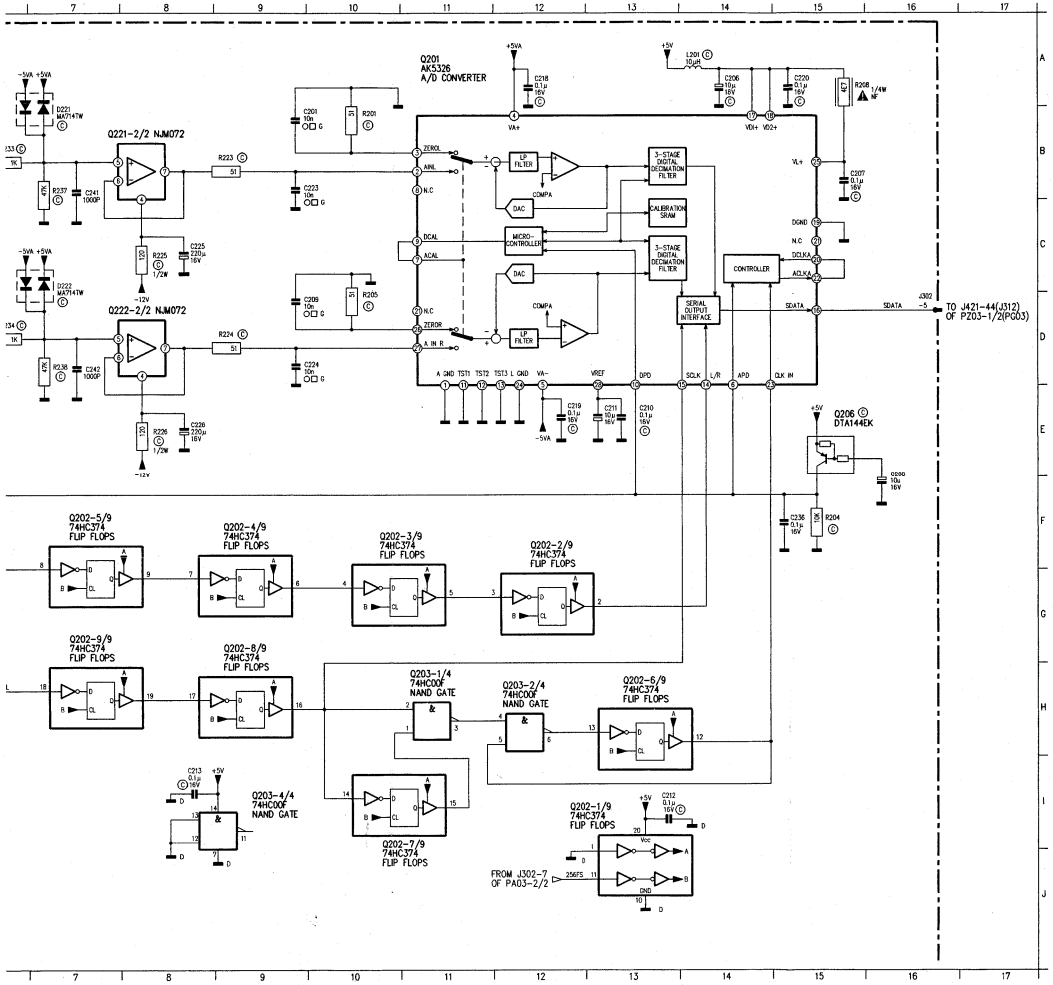

C201	B9
C202	G4
C203	G5
C204	I4
C205	I5
C206	A14
C207	B15
C208	F16
C209	D9
C210	E13
C211	E13
C212	I13
C213	I8
C214	G3
C215	G3
C216	I3
C217	I3
C218	A12
C219	E12
C220	A15
C221	B2
C222	D2
C223	B9
C224	D9
C225	C8
C226	E8
C227	B8
C228	D5
C231	B6
C232	D6
C236	F15
C241	B7
C242	D7
D221	B7
D222	C7
J301-1	C2
J301-2	C2
J301-3	D2
J301-4	D2
J301-5	B2
J301-6	B2
J302-5	D16
J302-6	F2
J302-9	F2
L201	A14
L202	U5
L205	I5
Q201	B11
Q202-1/9	I13
Q202-2/9	G12
Q202-3/9	G10
Q202-4/9	F9
Q202-5/9	F7
Q202-6/9	H13
Q202-7/9	I10
Q202-8/9	H9
Q202-9/9	H7
Q203-1/4	H11
Q203-2/4	H12
Q203-3/4	F6
Q203-4/4	I9
Q204	G4
Q205	I4
Q206	E15
Q221-1/2	B5
Q221-2/2	B8
Q222-1/2	D5
Q222-2/2	D8
R201	B10
R204	F15
R205	D10
R206	G3
R207	I3
R208	A15
R221	B4
R222	D4
R223	B9
R224	D9
R225	C8
R226	E8
R227	A5
R228	C5
R229	C5
R231	C4
R232	E4
R233	B6
R234	D6
R235	B3
R236	D3
R237	B7
R238	D7

AD/DA PCB (PA03)

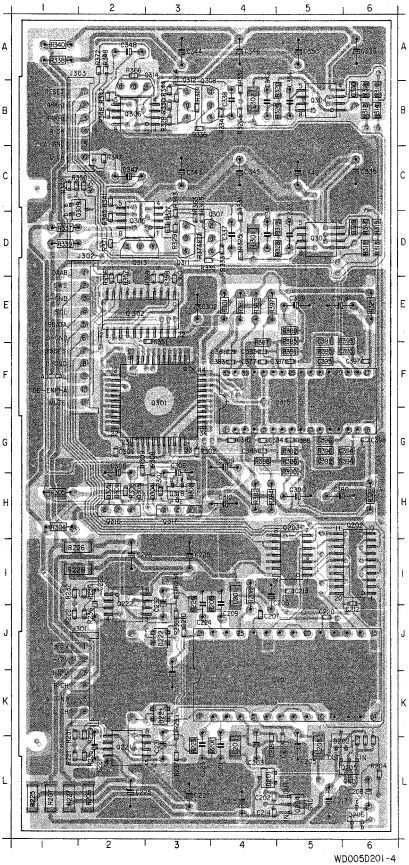

C201	L-4	Q201	K-5	R344	B-3
C202	L-4	Q202	I-6	R345	D-2
C203	L-4	Q203	I-5	R346	B-2
C205	L-5	Q204	L-5	R347	C-2
C206	I-4	Q205	L-6	R348	A-2
C207	J-4	Q206	L-6	R349	C-1
C208	L-6	Q221	L-2	R350	C-1
C209	I-4	Q222	I-2	R351	C-2
C210	J-3	Q301	F-3	R356	E-2
C211	K-3	Q302	E-2	R357	E-2
C212	I-6	Q303	D-5	R358	E-3
C213	I-5	Q304	B-5	R359	E-3
C214	L-4	Q305	D-2	R360	E-3
C215	L-4	Q306	B-2	R363	D-3
C217	L-5	Q307	D-3	R364	B-3
C218	L-4	Q308	B-3	R365	D-3
C219	L-5	Q309	C-2	R366	A-2
C220	J-5	Q311	D-3	R371	D-2
C221	L-2	Q312	B-3	R372	A-2
C222	I-2	Q313	D-2	R373	D-3
C223	L-3	Q314	B-2	R374	B-3
C224	I-3	Q315	F-5	R381	E-4
C225	L-2	Q316	H-2	R382	H-4
C226	I-2	Q317	H-3	R383	E-4
C227	L-3	Q318	H-3	R384	H-4
C228	I-3	R201	L-4	R385	E-5
C231	L-3	R204	L-6	R386	G-5
C232	I-3	R205	I-4	R387	F-4
C301	G-2	R206	L-2	R388	G-4
C302	E-3	R207	L-1	R389	E-5
C305	G-2	R208	I-4	R390	G-5
C306	G-3	R221	L-1	R391	F-5
C309	G-4	R222	J-1	R392	G-5
C310	H-4	R223	L-3	R393	E-6
C329	D-9	R224	I-3	R394	G-6
C330	B-6	R225	L-1	R395	F-5
C333	D-5	R226	I-1	R396	G-5
C334	B-5	R227	L-1	R397	E-4
C335	C-6	R228	I-1		
C336	A-6	R229	K-2		
C338	B-4	R230	I-2		
C341	D-4	R231	K-1		
C342	B-4	R232	I-1		
C343	C-3	R233	K-3		
C344	A-3	R234	I-3		
C345	C-4	R235	L-2		
C346	A-4	R236	I-2		
C347	C-2	R237	L-3		
C348	A-2	R238	J-3		
C349	C-5	R301	E-4		
C350	A-5	R302	G-3		
C351	E-3	R304	H-1		
C377	F-4	R305	H-1		
C379	E-5	R306	H-2		
C380	H-5	R307	H-3		
C381	F-4	R308	G-3		
C382	G-4	R309	G-2		
C383	F-4	R311	D-6		
C384	G-4	R312	B-6		
C385	F-4	R313	D-6		
C386	G-4	R314	B-6		
C387	F-5	R315	D-6		
C388	G-5	R316	B-6		
C389	E-5	R317	D-6		
C390	H-5	R318	B-6		
C391	E-5	R319	D-5		
C392	G-5	R320	B-5		
C393	F-6	R321	E-6		
C394	G-6	R322	H-6		
C395	F-5	R323	D-5		
C396	G-5	R324	B-5		
C397	F-6	R325	D-4		
C398	G-6	R326	B-4		
D201	L-4	R327	D-3		
D202	L-5	R328	B-3		
D221	K-3	R329	D-3		
D222	J-3	R330	B-3		
D301	H-2	R331	D-4		
D302	H-3	R332	B-4		
D303	H-2	R333	D-4		
D304	H-3	R334	B-4		
D305	H-2	R335	D-3		
J301	J-2	R336	B-3		
J302	D-2	R337	D-1		
J303	B-1	R338	A-1		
L201	I-4	R339	D-1		
L203	L-4	R340	A-1		
L205	L-5	R341	C-2		
L301	D-4	R342	B-2		
L302	B-4	R343	D-3		

AD/DA PCB (PA03)

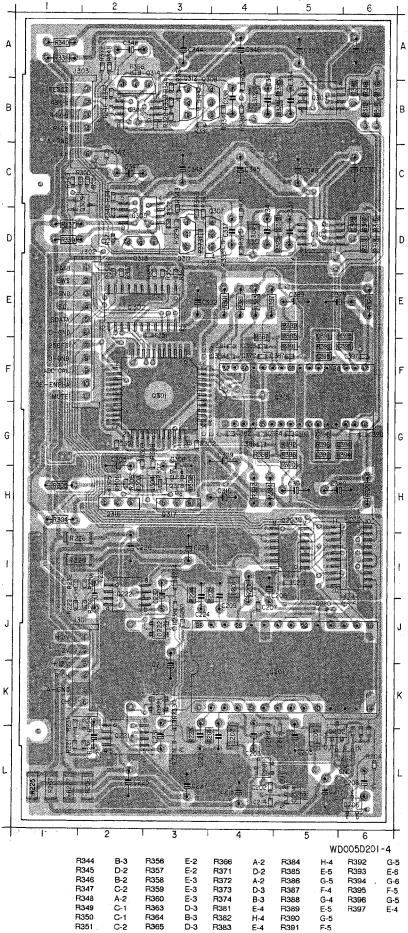

WD005D201-4

R344	B-3	R356	E-2	R366	A-2	R384	H-4	R392	G-5
R345	D-2	R357	E-2	R371	D-2	R385	E-5	R393	E-5
R346	B-2	R358	E-3	R372	A-2	R386	G-5	R394	G-6
R347	C-2	R359	E-3	R373	D-3	R387	F-4	R395	F-5
R348	A-2	R360	E-3	R374	B-3	R388	G-4	R396	G-5
R349	C-1	R363	D-3	R381	E-4	R389	E-5	R397	E-4
R350	C-1	R364	B-3	R382	H-4	R390	G-5		
R351	C-2	R365	D-3	R383	E-4	R391	F-5		

C201	L-4	Q201	K-5	C301	B-10	R321	A-16		
C202	L-4	Q202	I-6	C302	B-10	R322	H-16		
C203	L-4	Q203	I-5	C305	I-11	R323	D-20		
C205	L-5	Q204	L-5	C306	J-11	R324	F-20		
C206	I-4	Q205	L-6	C309	I-12	R325	I-4		
C207	J-4	Q206	L-6	C310	J-12	R326	I-17		
C208	L-6	Q221	L-2	C329	C-18	R327	H-6		
C209	I-4	Q222	I-2	C330	E-19	R328	I-19		
C210	J-3	Q301	F-3	C333	D-21	R329	H-5		
C211	K-3	Q302	E-2	C334	F-21	R330	I-19		
C212	I-9	Q303	D-5	C335	D-22	R331	I-4		
C213	I-5	Q304	B-5	C336	G-22	R332	I-17		
C214	L-4	Q305	D-2	C337	I-8	R333	I-5		
C215	L-4	Q306	B-2	C338	J-18	R334	J-18		
C217	L-5	Q307	D-3	C341	D-20	R335	J-4		
C218	L-4	Q308	B-3	C342	F-20	R336	J-4		
C219	L-5	Q309	C-2	C343	I-14	R337	C-22		
C220	J-5	Q311	D-3	C344	I-21	R338	E-22		
C221	L-2	Q312	B-3	C345	I-6	R339	D-22		
C222	I-2	Q313	D-2	C346	J-19	R340	F-22		
C223	L-3	Q314	B-2	C347	I-9	R341	I-7		
C224	I-3	Q315	F-5	C348	I-22	R342	I-20		
C225	L-2	Q316	H-2	C349	C-22	R343	H-4		
C226	I-2	Q317	H-3	C350	E-22	R344	I-17		
C227	L-3	Q318	H-3	C351	B-4	R345	I-8		
C228	I-3	R201	L-4	C377	E-12	R346	J-21		
C231	L-3	R204	L-6	C379	B-16	R347	I-9		
C232	I-3	R205	I-4	C360	H-16	R348	J-22		
C301	G-2	R206	L-2	C381	B-13	R349	J-2		
C302	E-3	R207	L-1	C382	G-12	R350	J-3		
C305	G-2	R208	I-4	C383	C-12	R351	J-3		
C306	G-3	R221	L-1	C384	H-13	R357	D-3		
C309	G-4	R222	J-1	C385	B-14	R359	E-3		
C310	H-4	R223	L-3	C386	H-14	R360	E-3		
C329	D-6	R224	I-3	C387	B-15	R363	H-5		
C330	B-6	R225	L-1	C388	H-15	R364	H-18		
C333	D-5	R226	I-1	C389	B-15	R365	G-5		
C334	B-5	R227	L-1	C390	H-15	R366	H-18		
C335	C-6	R228	I-1	C391	D-17	R371	G-6		
C336	A-6	R229	K-2	C392	F-17	R372	G-19		
C338	B-4	R230	I-2	C393	C-17	R373	H-6		
C341	D-4	R231	K-1	C394	E-17	R374	H-19		
C342	B-4	R232	I-1	C395	D-17	R376	D-2		
C343	C-3	R233	K-3	C396	F-17	R381	B-13		
C344	A-3	R234	I-3	C397	B-16	R382	F-12		
C345	C-4	R235	L-2	C398	H-16	R383	C-12		
C346	A-4	R236	I-2	D301	I-11	R384	H-13		
C347	C-2	R237	L-3	D302	J-11	R385	A-14		
C348	A-2	R238	J-3	D303	I-12	R386	H-14		
C349	C-5	R301	E-4	D304	J-11	R387	B-14		
C350	A-5	R302	G-3	D305	I-11	R388	H-14		
C351	E-3	R304	H-1	J302	B-2	R389	A-15		
C377	F-4	R305	H-1	J303	F-2	R390	H-15		
C379	E-5	R306	H-2	J303	H-23	R391	B-16		
C380	H-5	R307	H-3	J301	D-21	R392	H-16		
C381	F-4	R308	G-3	J302	F-21	R393	C-17		
C382	G-4	R309	G-2	Q301	B-7	R394	E-17		
C383	F-4	R311	D-6	Q302	B-4	R395	D-17		
C384	G-4	R312	B-6	Q303-1/2	D-19	R396	F-17		
C385	F-4	R313	D-6	Q303-1/2	F-19	R397	D-12		
C386	G-4	R314	B-6	Q303-2/2	C-21				
C387	F-5	R315	D-6	Q304-2/2	F-21				
C388	G-5	R316	B-6	Q305-1/2	I-8				
C389	E-5	R317	D-6	Q305-2/2	I-8				
C390	H-5	R318	B-6	Q306	I-21				
C391	E-5	R319	D-5	Q306-1/2	I-19				
C392	G-5	R320	B-5	Q307	J-4				
C393	F-6	R321	E-6	Q308	J-18				
C394	G-6	R322	H-6	Q309	J-3				
C395	F-5	R323	D-5	Q311	H-6				
C396	G-5	R324	B-5	Q312	H-19				
C397	F-6	R325	D-4	Q313	G-6				
C398	G-6	R326	B-4	Q315	B-13				
D201	L-4	R327	D-3	Q316	H-11				
D202	L-5	R328	B-3	Q317	J-11				
D221	K-3	R329	D-3	Q318	J-12				
D222	J-3	R330	B-3	R301	A-11				
D301	H-2	R331	D-4	R302	G-10				
D302	H-3	R332	B-4	R304	H-11				
D303	H-2	R333	D-4	R305	J-11				
D304	H-3	R334	B-4	R306	I-11				
D305	H-2	R335	D-3	R307	J-11				
J301	J-2	R336	B-3	R308	J-12				
J302	D-2	R337	D-1	R309	I-13				
J303	B-1	R338	A-1	R311	C-16				
L201	I-4	R339	D-1	R312	E-18				
L203	L-4	R340	A-1	R313	D-18				
L205	L-5	R341	C-2	R314	F-16				
L301	D-4	R342	B-2	R315	D-16				
L302	B-4	R343	D-3	R316	F-18				
				R317	C-19				
				R318	E-19				
				R319	D-20				
				R320	F-20				

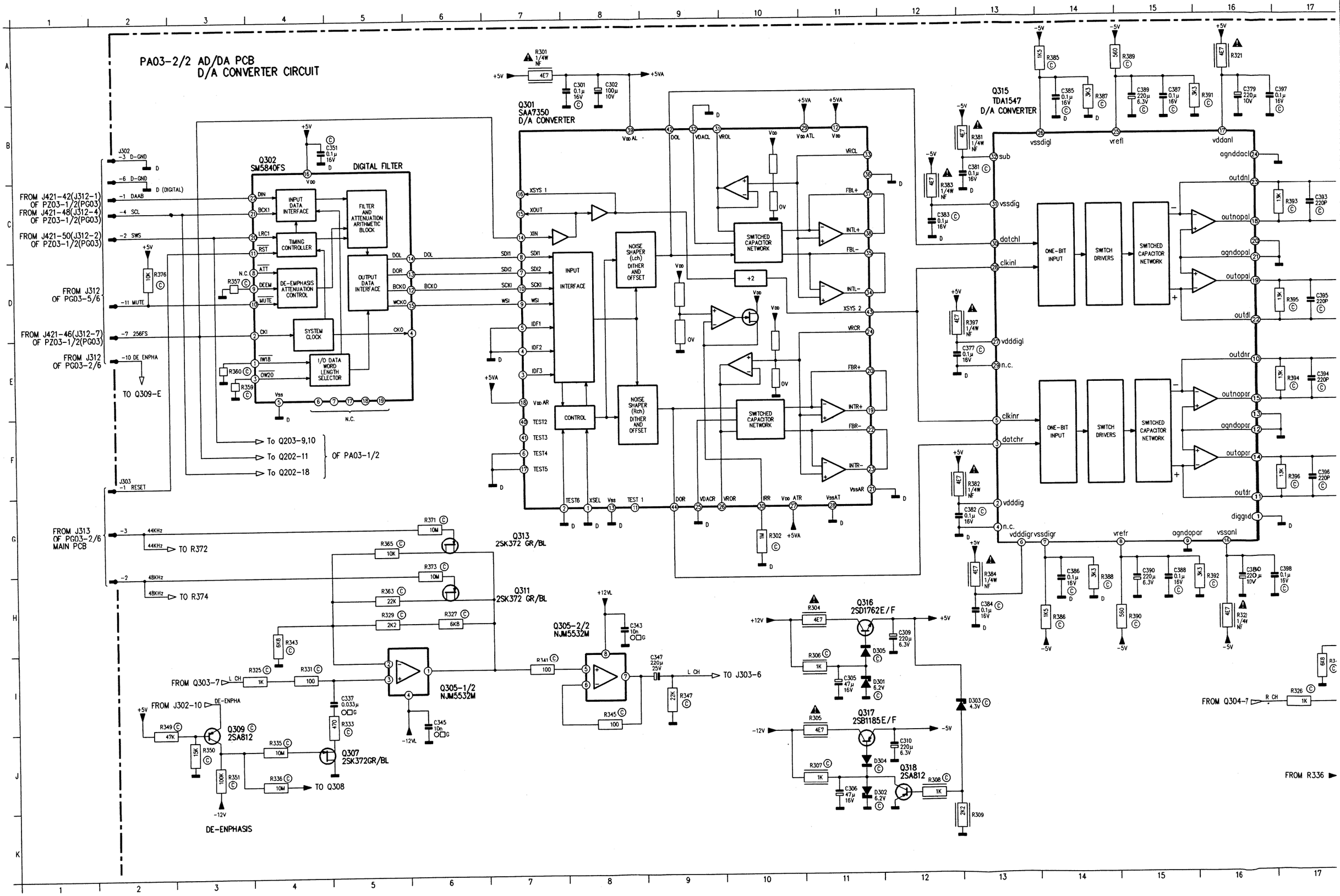
PA03-2/2 AD/DA PCB
D/A CONVERTER CIRCUIT
Q302
SM5840FS
DIGITAL FILTER
INPUT DATA INTERFACE
FILTER AND ATTENUATION ARITHMETIC BLOCK
TIMING CONTROLLER
OUTPUT DATA INTERFACE
DE-EMPHASIS ATTENUATION CONTROL
SYSTEM CLOCK
I/O DATA WORD LENGTH SELECTOR
Q301
SAA7350
D/A CONVERTER
INPUT INTERFACE
CONTROL
NOISE SHAPER (Lch) DITHER AND OFFSET
NOISE SHAPER (Rch) DITHER AND OFFSET
SWITCHED CAPACITOR NETWORK
Q315
TDA1547
D/A CONVERTER
ONE-BIT INPUT
SWITCH DRIVERS
FROM J421-42(J312-1) OF PZ03-1/2(PG03)
FROM J421-48(J312-4) OF PZ03-1/2(PG03)
FROM J421-50(J312-2) OF PZ03-1/2(PG03)
FROM J312 OF PG03-5/6
FROM J421-46(J312-7) OF PZ03-1/2(PG03)
FROM J312 OF PG03-2/6
TO Q309-E
To Q203-9,10
To Q202-11
To Q202-18
OF PA03-1/2
FROM J313 OF PG03-2/6 MAIN PCB
TO R372
TO R374
Q313
2SK372 GR/BL
Q311
2SK372 GR/BL
Q305-2/2
NJM5532M
Q305-1/2
NJM5532M
FROM Q303-7
FROM J302-10
Q309
2SA812
Q307
2SK372GR/BL
TO Q308
DE-ENPHASIS
TO J303-6
Q316
2SD1762E/F
Q317
2SB1185E/F
Q318
2SA812
FROM Q304-7
FROM R336

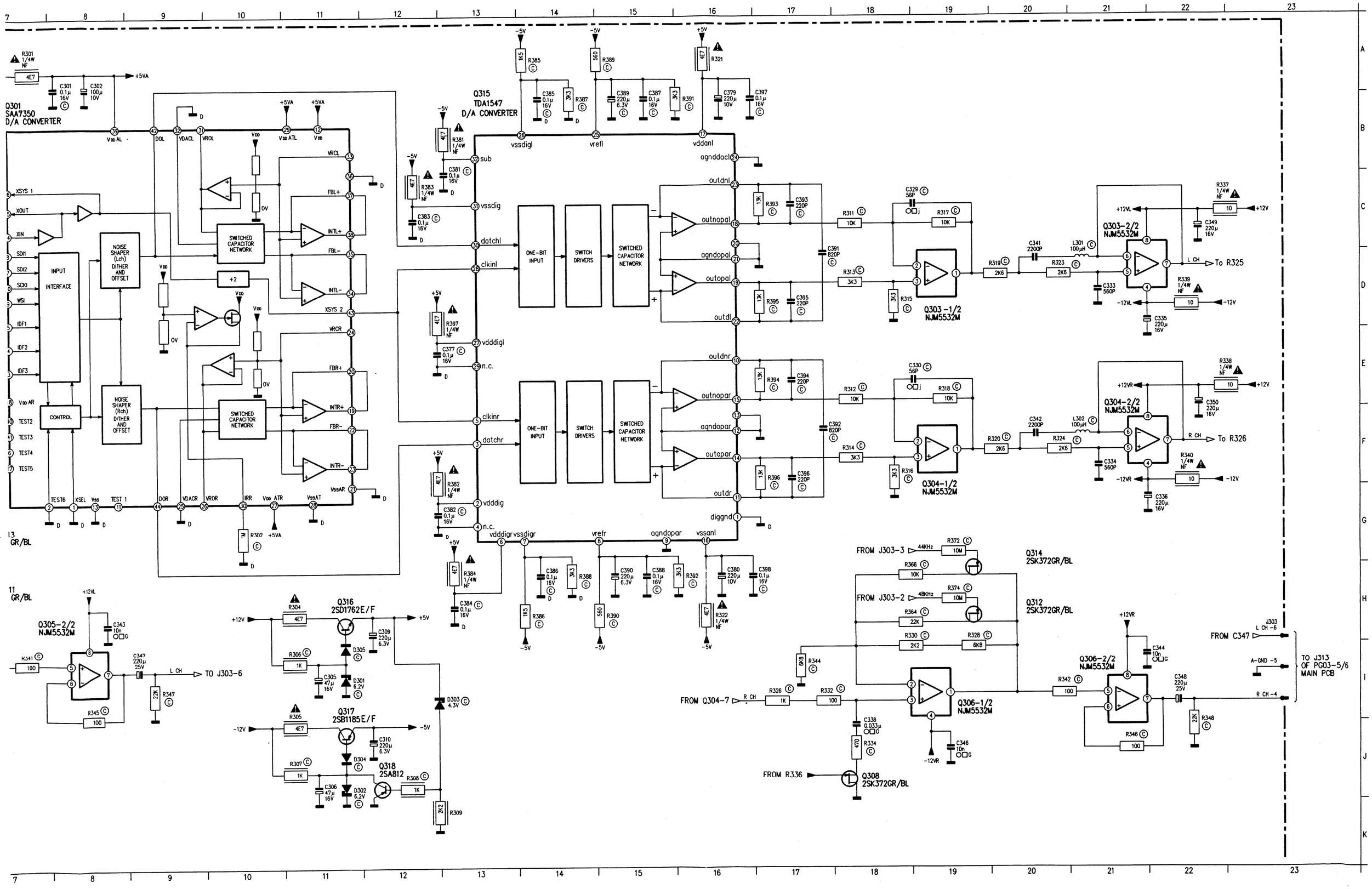
Q301
SAA7350
D/A CONVERTER
Q315
TDA1547
D/A CONVERTER
INPUT INTERFACE
NOISE SHAPER (Lch) DITHER AND OFFSET
NOISE SHAPER (Rch) DITHER AND OFFSET
CONTROL
SWITCHED CAPACITOR NETWORK
ONE-BIT INPUT
SWITCH DRIVERS
Q303-2/2
NJM5532M
Q303-1/2
NJM5532M
Q304-2/2
NJM5532M
Q304-1/2
NJM5532M
Q305-2/2
NJM5532M
Q306-2/2
NJM5532M
Q306-1/2
NJM5532M
Q316
2SD1762E/F
Q317
2SB1185E/F
Q318
2SA812
Q314
2SK372GR/BL
Q312
2SK372GR/BL
Q308
2SK372GR/BL
To R325
To R326
TO J303-6
FROM J303-3
FROM J303-2
FROM Q304-7
FROM R336
FROM C347
TO J313
OF PG03-5/6
MAIN PCB

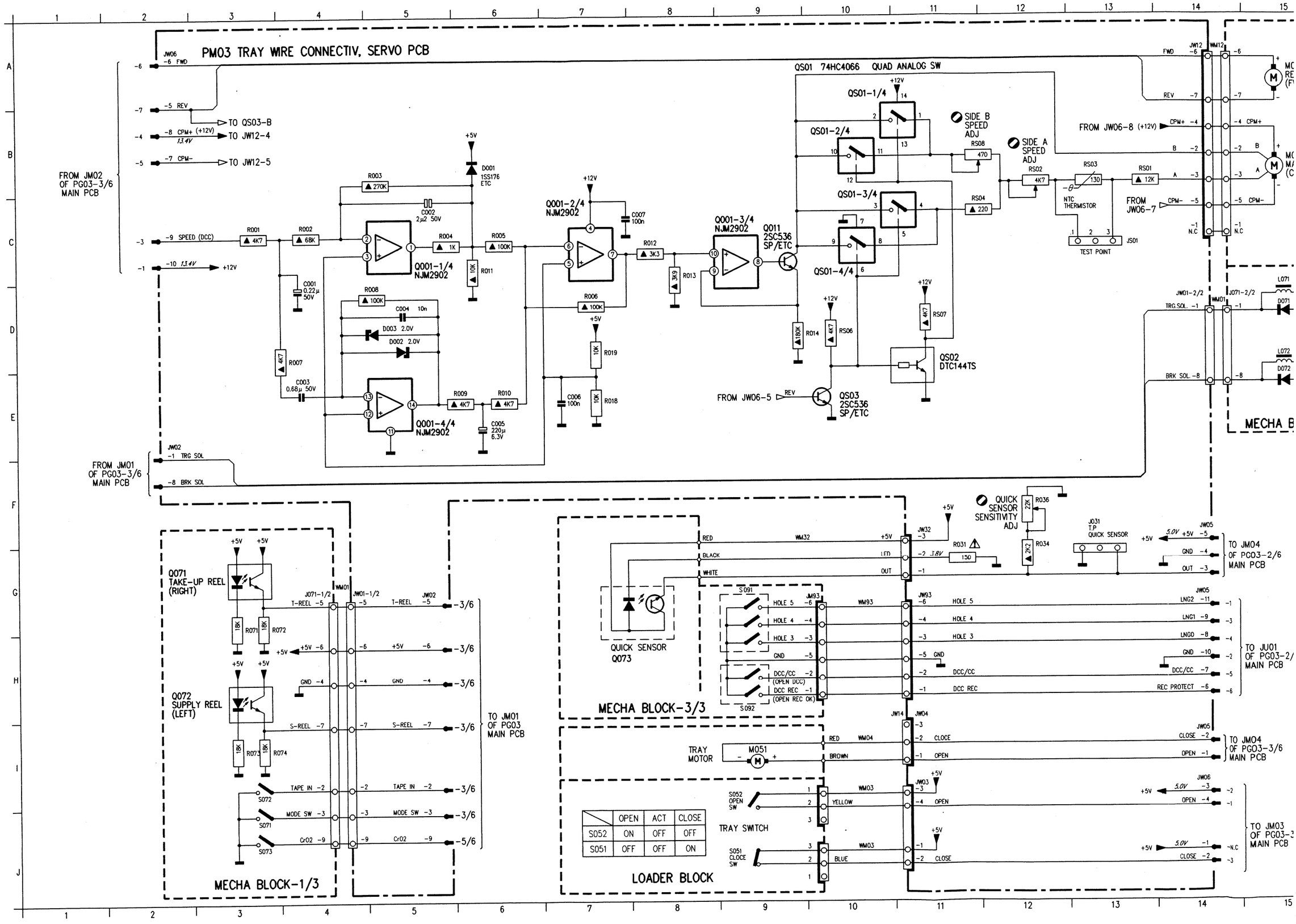

	OPEN	ACT	CLOSE
S052	ON	OFF	OFF
S051	OFF	OFF	ON

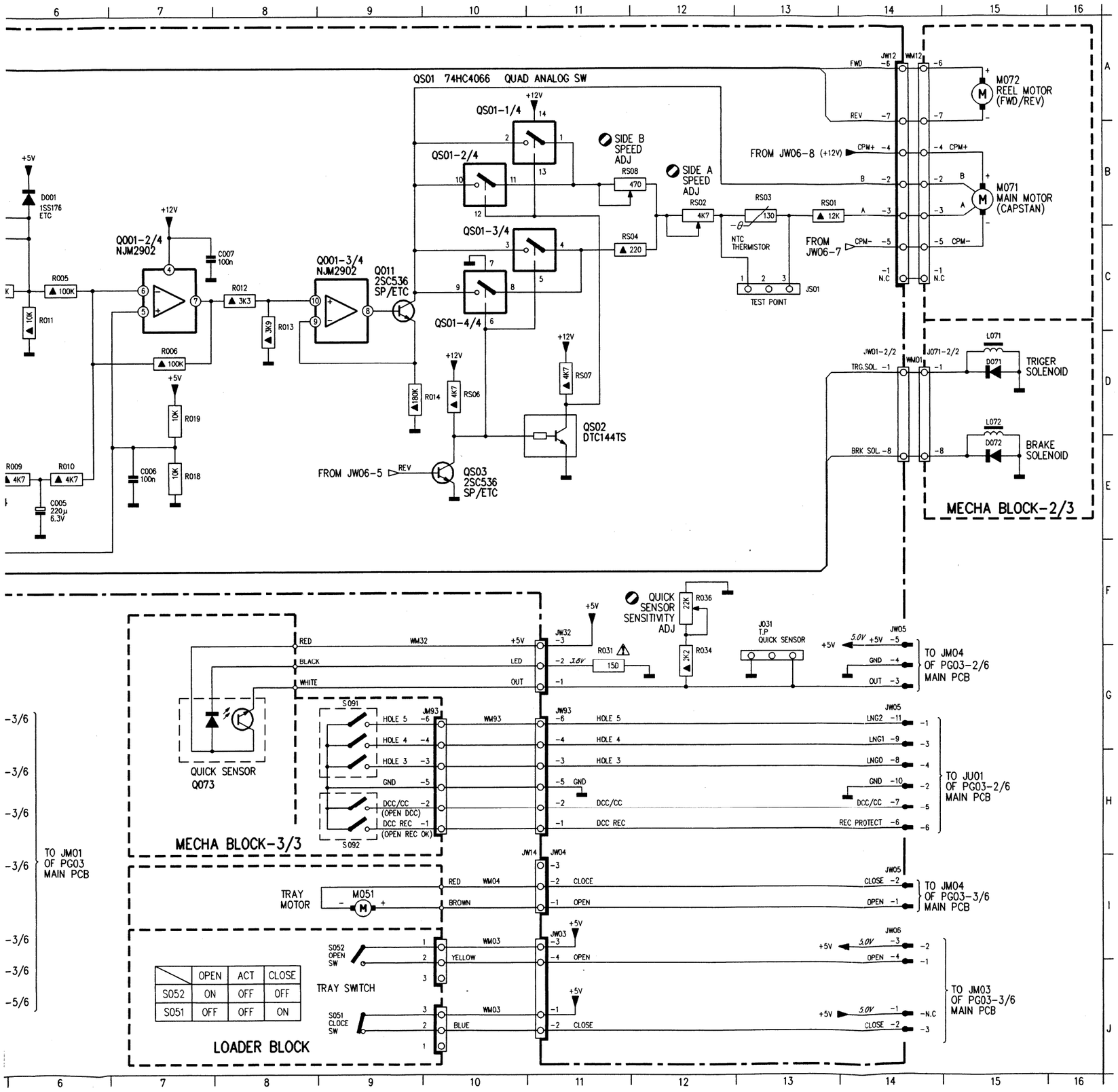

	OPEN	ACT	CLOSE
S052	ON	OFF	OFF
S051	OFF	OFF	ON

C001	D4	L071	D15
C002	C5	LO72	E15
C003	E4	M051	I9
C004	D5	M071	B15
C005	E6	M072	A15
C006	E7	Q001-1/4	C5
C007	C7	Q001-2/4	C7
D001	B6	Q001-3/4	C9
D002	D5	Q001-4/4	E5
D003	D5	Q011	C9
D071	D15	Q071	G3
DO72	E15	Q072	H3
J031	G13	Q073	G8
J071-1/2	G4	QS03	E10
J071-1/2-2	I4	QS01-1/4	B11
J071-1/2-3	J4	QS01-2/4	B10
J071-1/2-7	I4	QS01-3/4	C11
J071-1/2-9	J4	QS01-4/4	C10
J071-2/2	D14	QS02	D11
JM93	G10	R001	C3
JS01	C13	R002	C4
JW01-1/2	G4	R003	B5
JW01-1/2-2	I4	R004	C5
JW01-1/2-3	J4	R005	C6
JW01-1/2-7	I4	R006	D7
JW01-1/2-9	J4	R007	D4
JW01-2/2	D14	R008	D5
JW02-1	F2	R009	E6
JW02-2	I5	R010	E6
JW02-3	J5	R011	C6
JW02-4	H4	R012	C8
JW02-5	G5	R013	C8
JW02-6	H4	R014	D9
JW02-7	I5	R018	E7
JW02-8	F2	R019	D7
JW02-9	J5	R031	G11
JW03	I11	R034	G12
JW03-1	J11	R036	F12
JW03-2	J11	R071	G3
JW03-4	J11	R072	G3
JW04	I11	R073	I3
JW05-1	I14	R074	I3
JW05-10	H14	RS01	B13
JW05-11	G14	RS02	B12
JW05-2	I14	RS03	B13
JW05-3	G14	RS04	C11
JW05-4	G14	RS06	D10
JW05-5	G14	RS07	D11
JW05-6	H14	RS08	B11
JW05-7	H14	S052	I9
JW05-8	H14	S071	J3
JW05-9	G14	S072	I3
JW06-1	J14	S073	J3
JW06-10	C2	S091	G9
JW06-2	J14	S092	H9
JW06-3	I14	SD51	J9
JW06-4	J14	WM01	D14
JW06-5	A2	WM01	G4
JW06-6	A2	WM03	I10
JW06-7	B2	WM03	J10
JW06-8	B2	WM04	I10
JW06-9	C2	WM12-1	C14
JW12-1	C14	WM12-2	B14
JW12-2	B14	WM12-3	B14
JW12-3	B14	WM12-4	B14
JW12-4	B14	WM12-5	C14
JW12-5	C14	WM12-6	A14
JW12-6	A14	WM12-7	A14
JW12-7	A14	WM32	G9
JW32	G11	WM93	G10
JW93	G11		

TRAY WIRE CONNECTION, SERVO PCB (PM03)

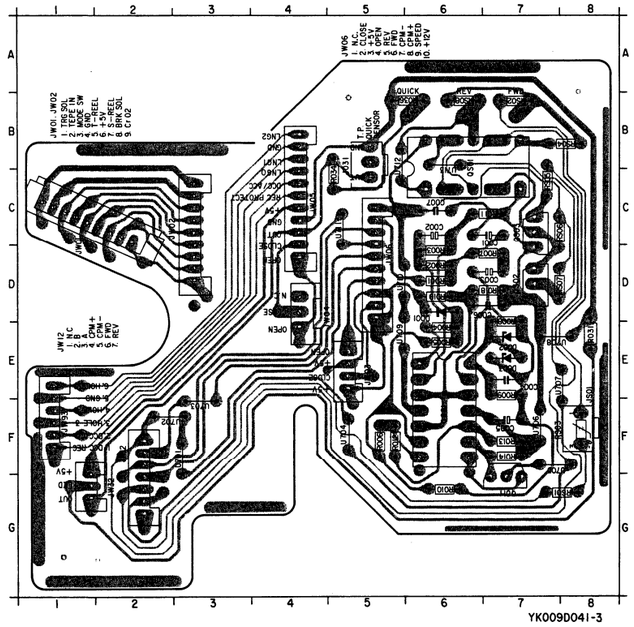

C001	C7	R008	E7
C002	C6	R009	E7
C003	D7	R010	G6
C004	E7	R011	C7
C005	F7	R012	F5
C006	D7	R013	F7
C007	C6	R014	F7
D001	D6	R018	D7
D002	E7	R019	D6
D003	E7	R031	E8
J031	B5	R034	C5
JS01	F8	R036	B6
JW01	C1	RS01	G8
JW02	C3	RS02	B7
JW03	E5	RS03	F8
JW04	D4	RS04	B8
JW05	C4	RS05	C7
JW06	D5	RS06	C7
JW12	F2	RS07	D7
JW32	G1	RS08	B6
JW93	F1	U701	F3
Q001	F6	U702	F2
Q011	G7	U703	F3
QS01	B6	U704	F5
QS02	D7	U705	F7
QS03	C7	U706	F7
R001	D6	U707	E8
R002	D6	U708	E7
R003	D6	U709	E5
R004	E6	U710	D5
R005	E6	U711	C5
R006	F5	U712	B5
R007	D7	U713	B6

IR SENSOR PCB (PD04)

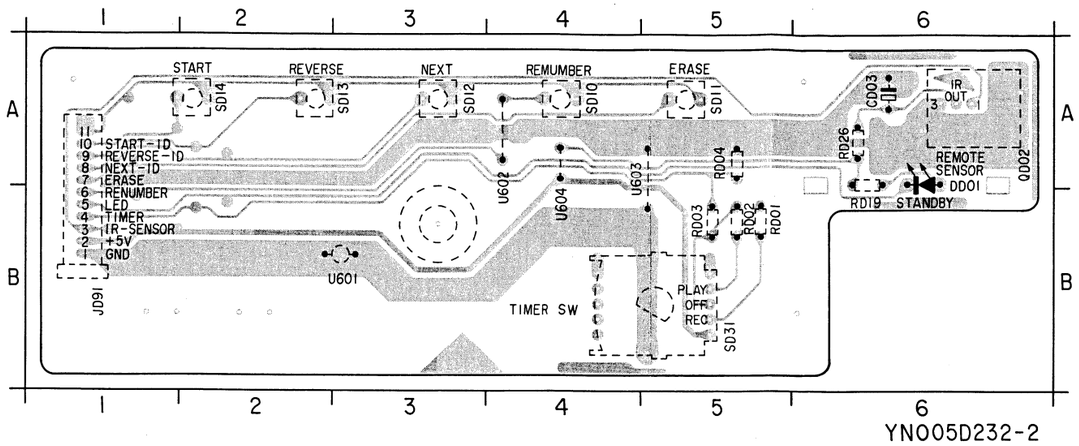

CD03	A-6
DD01	A-6
JD91	B-1
QD02	A-6
RD01	B-5
RD02	B-5
RD03	B-5
RD04	A-5
RD19	A-6
RD26	A-6
SD10	A-4
SD11	A-5
SD12	A-3
SD13	A-2
SD14	A-2
SD31	B-5
U601	B-3
U602	A-4
U603	A-5
U604	A-4

FRONT PCB (PD03)

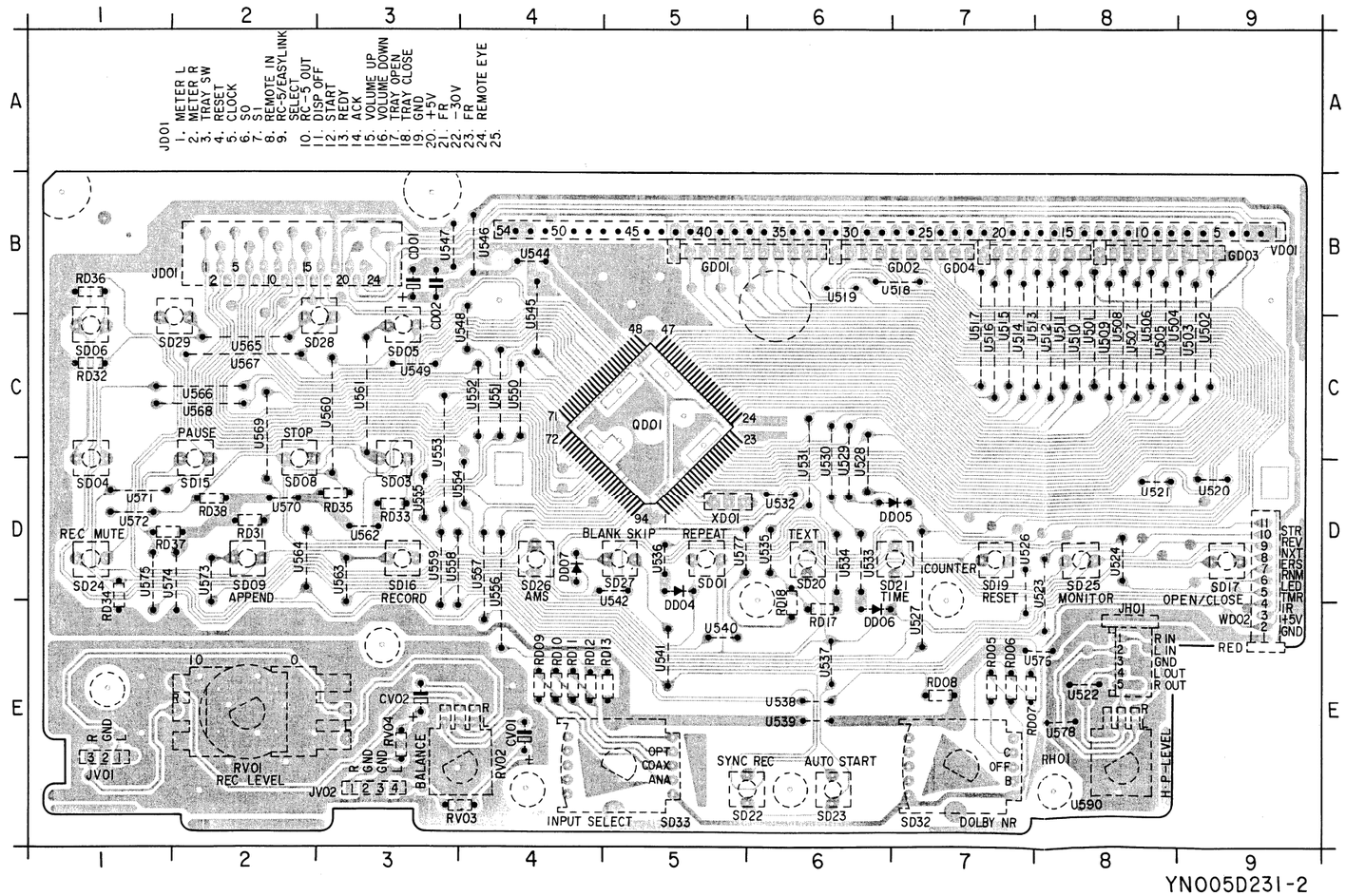

CD01	B-3	SD17	D-9	U536	D-5
CD02	B-3	SD19	D-7	U537	E-6
CV01	E-4	SD20	D-6	U538	E-6
CV02	E-3	SD21	D-7	U539	E-6
DD05	D-7	SD22	E-6	U540	E-5
DD06	E-6	SD23	E-6	U541	E-5
DD07	D-4	SD24	D-1	U542	D-5
GD01	B-5	SD25	D-8	U544	B-4
GD02	B-7	SD26	D-4	U545	B-4
GD03	B-8	SD27	D-5	U545	C-4
GD04	B-7	SD28	C-3	U546	B-4
JD01	B-2	SD29	C-2	U547	B-3
JH01	E-8	SD32	E-7	U548	C-4
JV01	E-1	SD33	E-5	U549	C-3
JV02	E-3	U501	C-8	U550	C-4
QD01	C-5	U502	C-9	U551	C-4
RD05	E-7	U503	C-9	U552	C-4
RD06	E-7	U504	C-8	U553	C-3
RD07	E-7	U505	C-8	U554	D-4
RD08	E-7	U506	C-8	U555	D-3
RD09	E-4	U507	C-8	U556	D-4
RD10	E-4	U508	C-8	U557	D-4
RD11	E-4	U509	C-8	U557	D-6
RD12	E-4	U510	C-8	U558	D-3
RD13	E-5	U511	C-8	U559	D-3
RD17	E-6	U512	C-8	U560	C-3
RD18	E-6	U513	C-8	U561	C-3
RD31	D-2	U514	C-7	U562	D-3
RD32	C-1	U515	C-7	U563	D-3
RD33	D-3	U516	C-7	U564	D-2
RD34	D-1	U517	C-7	U565	C-2
RD35	D-3	U518	B-7	U566	C-2
RD36	B-1	U519	B-6	U567	C-2
RD37	D-1	U520	D-9	U568	C-2
RD38	D-2	U521	D-8	U569	C-2
RH01	E-8	U522	E-8	U570	D-2
RV01	E-2	U523	D-8	U571	D-1
RV02	E-4	U524	D-8	U572	D-1
RV03	E-4	U526	D-7	U573	D-2
SD01	D-5	U527	D-7	U574	D-1
SD03	D-3	U528	D-6	U574	D-2
SD04	D-1	U529	D-6	U575	D-1
SD05	C-3	U530	D-6	U576	E-8
SD06	C-1	U531	D-6	U578	E-8
SD08	D-2	U532	D-6	U590	E-8
SD09	D-2	U533	D-6	VD01	B-9
SD15	D-2	U534	D-6	WD02	D-9
SD16	D-3	U535	D-6	XD01	D-5

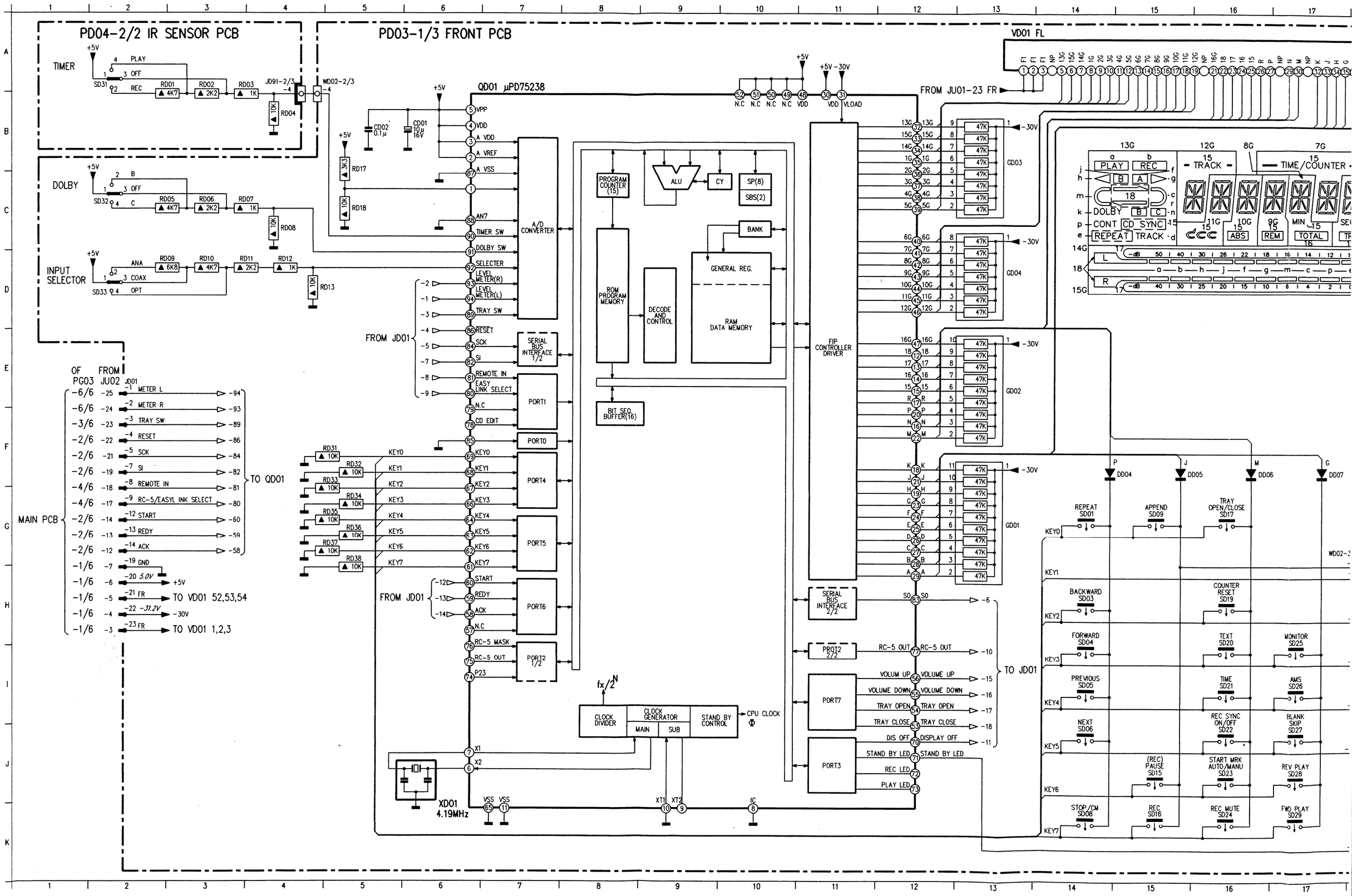
PD04-2/2 IR SENSOR PCB
TIMER
PLAY
OFF
REC
DOLBY
B
C
INPUT SELECTOR
ANA
COAX
OPT
PD03-1/3 FRONT PCB
QD01 μPD75238
A/D CONVERTER
SERIAL BUS INTERFACE 1/2
PORT1
PORT0
PORT4
PORT5
PORT6
PORT2 1/2
PROGRAM COUNTER (15)
ALU
CY
SP(8)
SBS(2)
BANK
ROM PROGRAM MEMORY
DECODE AND CONTROL
GENERAL REG.
RAM DATA MEMORY
BIT SEQ. BUFFER(16)
FIP CONTROLLER DRIVER
SERIAL BUS INTERFACE 2/2
PROT2 2/2
PORT7
PORT3
CLOCK DIVIDER
CLOCK GENERATOR
MAIN
SUB
STAND BY CONTROL
CPU CLOCK
XD01 4.19MHz
FROM JD01
FROM JU01-23 FR
VD01 FL
TO QD01
TO JD01
TO VD01 52,53,54
TO VD01 1,2,3
MAIN PCB
OF PG03
FROM JU02
METER L
METER R
TRAY SW
RESET
SCK
SI
REMOTE IN
RC-5/EASYL INK SELECT
START
REDY
ACK
GND
FR
TRACK
TIME/COUNTER
REPEAT
APPEND
TRAY OPEN/CLOSE
BACKWARD
COUNTER RESET
FORWARD
TEXT
MONITOR
PREVIOUS
TIME
AMS
NEXT
REC SYNC ON/OFF
BLANK SKIP
(REC) PAUSE
START MRK AUTO/MANU
REV PLAY
STOP/CM
REC
REC MUTE
FWD PLAY

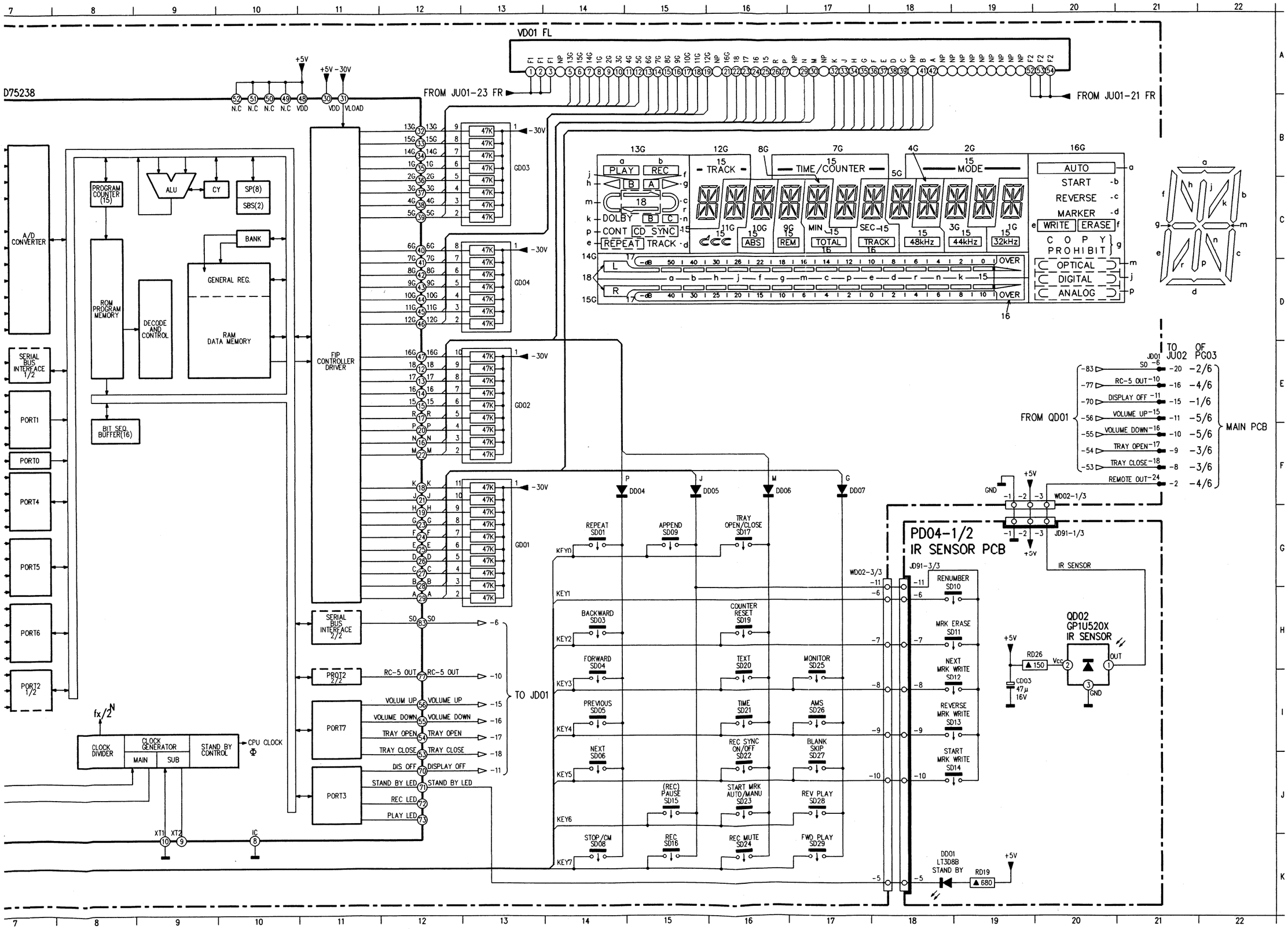

CD01	B-6	SD06	J-14
CD02	B-5	SD08	K-14
CD03	I-19	SD09	G-15
CV01	E-4	SD10	H-18
CV02	E-3	SD11	H-18
DD01	K-18	SD12	I-18
DD04	F-14	SD13	I-18
DD05	D-7	SD14	J-18
DD05	F-15	SD15	J-15
DD06	E-6	SD16	K-15
DD06	F-16	SD17	D-9
DD07	D-4	SD17	G-16
DD07	F-17	SD19	D-7
GD01	G-13	SD19	H-16
GD02	E-13	SD20	D-6
GD03	B-13	SD20	I-16
GD04	D-13	SD21	D-7
JD01	E-2	SD21	I-16
JD01	E-21	SD22	E-6
JD91-2/3	A-4	SD22	J-16
JD91-1/3	G-19	SD23	E-6
JD91-3/3	G-18	SD23	J-16
JH01	E-8	SD24	K-16
JV01	E-1	SD25	D-8
JV02	E-3	SD25	I-17
QD01	A-7	SD26	D-4
QD02	H-20	SD26	I-17
RD01	A-2	SD27	D-5
RD02	A-3	SD27	J-17
RD03	A-4	SD28	J-17
RD04	B-4	SD29	K-17
RD05	C-2	SD31	A-2
RD05	E-7	SD32	C-2
RD06	C-3	SD32	E-7
RD06	E-7	SD33	D-2
RD07	C-4	SD33	E-5
RD07	E-7	U520	D-9
RD08	C-4	U521	D-8
RD08	E-7	U522	E-8
RD09	E-4	U523	D-8
RD10	D-3	U524	D-8
RD10	E-4	U526	D-7
RD11	D-4	U527	D-7
RD11	E-4	U528	D-6
RD12	D-4	U529	D-6
RD12	E-4	U530	D-6
RD13	D-4	U531	D-6
RD13	E-5	U532	D-6
RD17	B-5	U533	D-6
RD17	E-6	U534	D-6
RD18	C-5	U535	D-6
RD18	E-6	U536	D-5
RD19	K-19	U537	E-6
RD26	H-20	U538	E-6
RD31	F-5	U539	E-6
RD32	F-5	U540	E-5
RD33	G-5	U541	E-5
RD34	G-5	U542	D-5
RD35	G-5	U554	D-4
RD36	G-5	U556	D-4
RD37	G-5	U557	D-4
RD38	H-5	U557	D-6
RD90	S-2	U576	E-8
RH01	E-8	U578	E-8
RV01	E-2	U590	E-8
RV02	E-4	VD01	A-13
RV03	E-4	WD02	D-9
SD01	D-5	WD02-2/3	A-4
SD01	G-14	WD02-1/3	F-20
SD03	H-14	WD02-3/3	G-18
SD04	I-14	XD01	D-5
SD05	I-14	XD01	J-6