Service Manual

74 MX540/01B/02B

HiFi Stereo CD Changer System

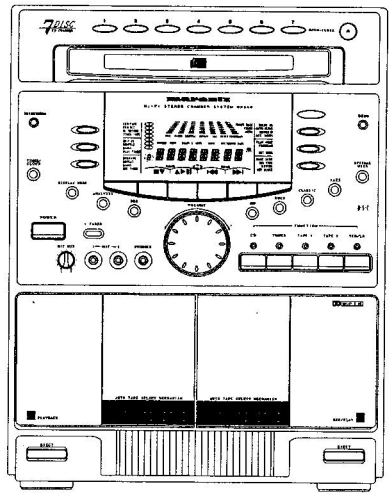

74MX540/01B

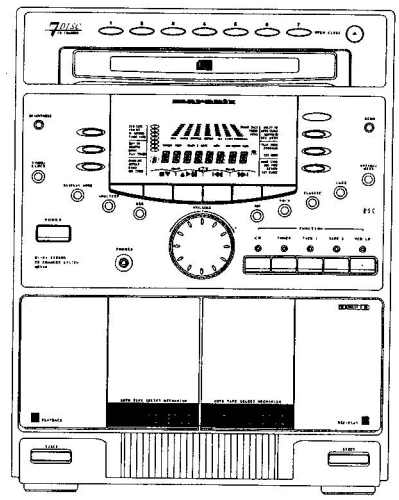

74MX540/02B

TABLE OF CONTENTS

Please use this service manual with referring to the user guide (D.F.U) without fail.

marantz®

model MX540

4822 725 51111
First Issue 1996.01
173W855020 ACT

MARANTZ DESIGN AND SERVICE

Using superior design and selected high grade components, **MARANTZ** company has created the ultimate in stereo sound. Only original **MARANTZ** parts can insure that your **MARANTZ** product will continue to perform to the specifications for which it is famous.

Parts for your **MARANTZ** equipment are generally available to our National Marantz Subsidiary or Agent.

ORDERING PARTS:

Parts can be ordered either by mail or by Fax.. In both cases, the correct part number has to be specified.

The following information must be supplied to eliminate delays in processing your order:

1. Complete address
2. Complete part numbers and quantities required
3. Description of parts
4. Model number for which part is required
5. Way of shipment
6. Signature: any order form or Fax. must be signed, otherwise such part order will be considered as null and void.

USA
MARANTZ AMERICA, INC.
440 MEDINAH ROAD
ROSELLE, ILLINOIS 60172-2330
USA
PHONE : 708-307-3100
FAX : 708-307-2687

CANADA
LENBROOK INDUSTRIES LIMITED
633 GRANITE COURT,
PICKERING, ONTARIO L1W 3K1
CANADA
PHONE : 416-831-6333
FAX : 416-831-6936

EUROPE
MARANTZ EUROPE B.V.
P.O.BOX 80002
BUILDING SFF2
5600 JB EINDHOVEN
THE NETHERLANDS
PHONE : +31-40-2732241
FAX : +31-40-2735578

***PROFESSIONAL*-USA**
SUPERSCOPE TECHNOLOGIES, INC.
MARANTZ PROFESSIONAL PRODUCTS
1000 CORPORATE BLVD., SUITE D
AURORA, ILLINOIS 60504 USA
PHONE : 708-820-4800
FAX : 708-820-8103

***PROFESSIONAL*-CANADA**
TC ELECTRONICS CANADA LTD
540 FIRING AVE.
BAIE D'URFÉ, QUEBEC H9X 3T2
CANADA
PHONE : 514-457-4044
FAX : 514-457-5524

TRADING
MARANTZ EUROPE B.V.
P.O.BOX 80002
BUILDING SFF2
5600 JB EINDHOVEN
THE NETHERLANDS
PHONE : +31-40-2732241
FAX : +31-40-2735578

AUSTRALIA
MARANTZ AUSTRALIA
3 Figtree Drive
Australia Centre
Homebush, NSW2140 AUSTRALIA
PHONE : +61 2 742.8311
FAX : +61 2 7643074

HONG-KONG
FORWARD INTERNATIONAL CORP. LTD.
15 TH FLOOR, REGENT CENTRE,
88 QUEEN'S ROAD, CENTRAL, H. K.
PHONE : +852 521-0883
FAX : +852 521-7835

THAILAND
MRZ STANDARD CO., LTD.
746-750 WANGBURAPA BANGKOK
10200 THAILAND
PHONE : +66 2222 9181
FAX : +66 2225 8871

TAIWAN
PAI-YUING CO., LTD.
6 TH FL NO. 148 SUNG KIANG RORD,
TAIPEI, 10429. TAIWAN R.O.C.
PHONE : +886 (2) 5221304~8
FAX : +886 (2) 5630415

MALAYSIA
WO KEE HONG ELECTRONICS SDN. BHD.
NO. 102 JALAN SS 21/35, DAMANSARA
UTAMA, 47400 PETALING JAYA
SELANGOR DARUL EHSAN,
MALAYSIA
PHONE : +60 3-7184666
FAX : +60 3-7173828

SINGAPORE
WO KEE HONG (SINGAPORE) PTE. LTD.
29, LENG KEE ROAD
SINGAPORE 159099,
PHONE : +65 475-4555
FAX : +65 475-8623

JAPAN—*Technical*
MARANTZ JAPN INC.
35-1, 7-chome, Sagamiono
Sagamihara-shi, Kanagawa
Japan
PHONE : +81 427 48 2181
FAX : +81 427 48 0889

日本マランツ株式会社
本　社〒228 神奈川県相模原市相模大野7丁目35番1号
営業本部〒150 東京都渋谷区恵比寿南1丁目11番9号

SHOCK, FIRE HAZARD SERVICE TEST:

CAUTION: After servicing this appliance and prior to returning to customer, measure the resistance between either primary AC cord connector pins (with unit NOT connected to AC mains and its Power switch ON), and the face or Front Panel of product and controls and chassis bottom.

Any resistance measurement less than 1 Megohms should cause unit to be repaired or corrected before AC power is applied, and verified before it is return to the user/customer.

Ref. UL Standard NO.1492.

In case of difficulties, do not hesitate to contact the Technical Department at above mentioned address.

951108KI

SPECIFICATIONS

GENERAL

Mains voltage	:	230V for /02B
	:	110V-127V/220-240V switchable for /01B
Mains frequency	:	50Hz - 60Hz
Power consumption	:	≤ 120W max. ≤ 3W in Standby mode
Mains breakdown buffer time	:	≤ 10 minutes
Dimension centre unit	:	240 x 310 x 280mm

AMPLIFIER

Output power	:	2 x 30W at 8Ω, D=10%
Music power	:	2 x 50W at 8Ω
Frequency response within ±3dB	:	63Hz - 14kHz
Power stage protection	:	Shortcircuit, AC, DC, Temperature
Headphone output	:	3.5mm stereo socket 2.5Vemf
Input sensitivity Aux/TV	:	1000mV
Mic	:	2.5mV

Equalizer:

60Hz	:	± 6dB
1kHz	:	± 6dB
12kHz	:	± 6dB

Dynamic Bass Boost (DBB):

At 60Hz ± 10Hz

DBB1	:	+ 6dB ± 2dB
DBB2	:	+ 10dB ± 2dB
DBB3	:	+ 14dB ± 2dB

TUNER:

FM

Tuning range	:	87.5MHz - 108MHz
IF frequency	:	10.7MHz
Grid frequency	:	50kHz
Aerial input	:	75Ω coaxial
Sensitivity Mono 26dB S/N	:	≤ 1.7μV
Sensitivity Stereo 46dB S/N	:	≤ 45μV
Sensitivity Search tuning	:	≤ 7μV
Distortion at RF=1mV, _f=75kHz	:	≤ 7% (2% typ.)
Channel separation	:	≥ 26dB (30dB typ.)
Image rejection ratio	:	≥ 30dB (70dB typ.)
3dB limiting point	:	≤ 2μV (1.5μV typ.)

MW

Tuning range	:	522kHz - 1611kHz
IF frequency	:	450kHz
Grid frequency	:	9kHz
Aerial input	:	Ferrite Antenna
Sensitivity	:	≤ 2.mV/M
Distortion at RF = 100mV, m = 80%	:	≤ 5% (3% typ.)
Image rejection ratio	:	≥ 27dB (30dB typ.)

LW (not for /01B version)

Tuning range	:	153kHz - 279kHz
IF frequency	:	450kHz
Grid frequency	:	3kHz
Aerial input	:	Ferrite Antenna
Sensitivity	:	≤ 5.mV/M
Distortion at RF = 100mV, m = 80%	:	≤ 5% (3% typ.)
Image rejection ratio	:	≥ 40dB (43dB typ.)

COMPACT DISC

Have to be measured direct on internal connector 1300

Frequency response	:	20Hz - 20kHz ±2dB
Output level	:	2V ± 3dB
Signal/Noise ratio	:	90dB
Distortion	:	< 1% at 1kHz
Channel difference	:	< 2dB at 1kHz
Channel crosstalk	:	50dB max.
De-emphasis	:	0 or 15/50 μS (Switched by subcode on the disc)

Laser:	Output power	:	≤ 500μW
	Wave length	:	780nm ± 20nm

CASSETTE RECORDER

Number of track	:	2 x 2 stereo
Tape speed	:	4.76 cm/sec ± 2%
Wow and flutter	:	≤ 0.4%
Fast-wind time C60	:	≤ 130 sec
Erase/Bias system	:	AC 80kHz ± 5kHz
RIF shift	:	Service solution on request
Distortion at 200nWb/m	:	≤ 3%
Channel difference at PB	:	≤ 3dB
Channel separation at 1kHz	:	≥ 18dB
Track separation at 1kHz	:	≥ 55dB
Recording playback frequency response within 8dB	:	60Hz - 14kHz
Signal to Hiss ratio[1]	:	typ. 52dB with Fe typ. 54dB with CrO_2
Signal to noise ratio[2]	:	typ. 47dB with Fe typ. 47dB with CrO_2
Erase attenuation[3]	:	≥ 62dB

[1] at 250nW/m A-weighted
[2] at 250nW/m FF-weighted
[3] use a 1kHz passfilter to minimize the wide band noise component.

MEASUREMENT SETUP

Tuner FM

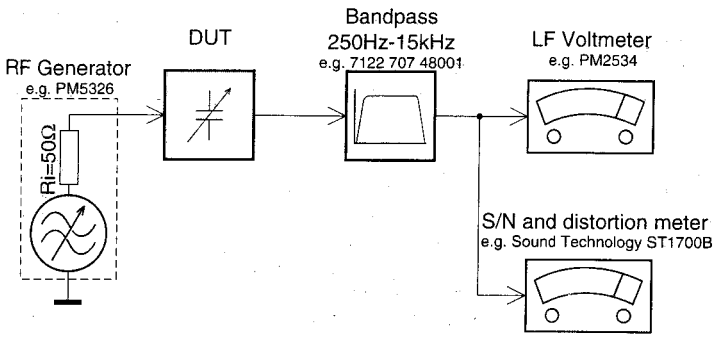

Use a bandpass filter to eliminate hum (50Hz, 100Hz) and disturbance from the pilottone (19kHz, 38kHz).

Tuner AM (MW,LW)

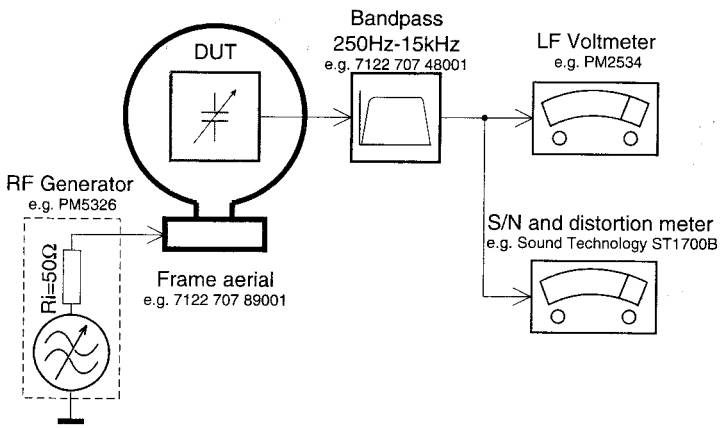

To avoid atmospheric interference all AM-measurements have to be carried out in a Faraday´s cage.
Use a bandpass filter (or at least a high pass filter with 250Hz) to eliminate hum (50Hz, 100Hz).

CD

Use Audio Signal Disc SBC429 4822 397 30184
(replaces test disc 3)

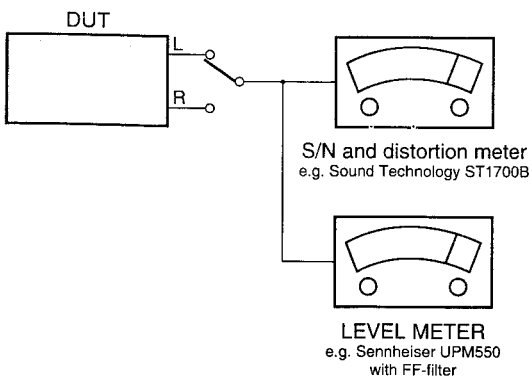

RECORDER

Use Universal Test Cassette **CrO_2** SBC419 4822 397 30069
or Universal Test Cassette **Fe** SBC420 4822 397 30071

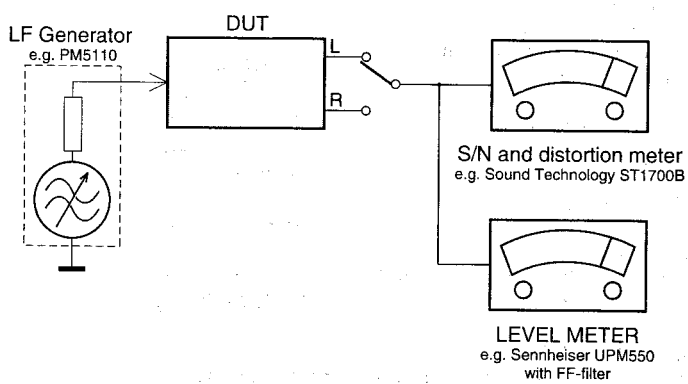

RC5 SYSTEM/COMMANDS CODES

Remote control key	System Code	Command Code
Standby	17, 18, 20	12
Stand by pressed longer than 1sec	00, 04, 05	12
Tuner	17	63
Tuning Up	17	30
Tuning down	17	31
Preset up	17	32
Preset down	17	33
CD	20	63
CD Play	20	53
CD Stop	20	54
CD Pause	20	48
Preset 10 key	20	00-09
CD Next	20	32
CD Previous	20	33
CD Search forward	20	52
CD Search backward	20	50
CD Disc	20	30
Tape 1	18	44
Tape 2	18	46
◄ ►	18	47
Tape Play	18	53
Tape Stop	18	54
Tape Wind	18	52
Tape Rewind	18	50
Tape Pause	18	48
DBB	16	70
DSC	16	79
Volume up	16	16
Volume down	16	17
Vocal Fader [1)]	16	67
Key control up [1)]	16	68
Key control down [1)]	16	69
VCD/LD	04	63
TV/VCR	00	63
Display	00	15

[1)] For sets with KARAOKE only

INDEX

English

Thank you for selecting this Marantz system

This state-of-the-art mini stereo system offers you the latest technology, high quality sound and an extreme user-friendly operation thanks to its large display which contains advanced interactive user interface.

Important information!

To avoid damaging your unit:
- avoid strong vibrations and tilting the unit during operation (transport, jolts, ...),
- do not disconnect the unit from the mains voltage during operation.

Supplied accessories

- 2 loudspeaker boxes, LS 540MX
- 2 loudspeaker cables
- Remote control
- Two batteries (AAA cells) for the remote control
- AC mains lead
- AM frame aerial
- FM wire antenna

Demo mode

The system has a demo mode, showing various features offered by the system.

1 To switch on the demonstration mode, press DEMO.
→ The display demonstration starts with the message: "WELCOME TO THE AUDIO WORLD".

2 To leave the demonstration mode, press DEMO or POWER.

Environmental information

All unnecessary packaging material has been omitted. We have done our utmost to make the packaging easily separable into three mono-materials:
- cardboard (box)
- expandable polystyrene (buffer)
- polyethylene (bags, protective foam sheet)

Note: Your set consists of materials which can be recycled if disassembled by a specialized company. Please observe the local regulations regarding the disposal of packing materials, exhausted batteries and old equipment.

This product complies with the radio interference requirements of the EU (European Union).

English

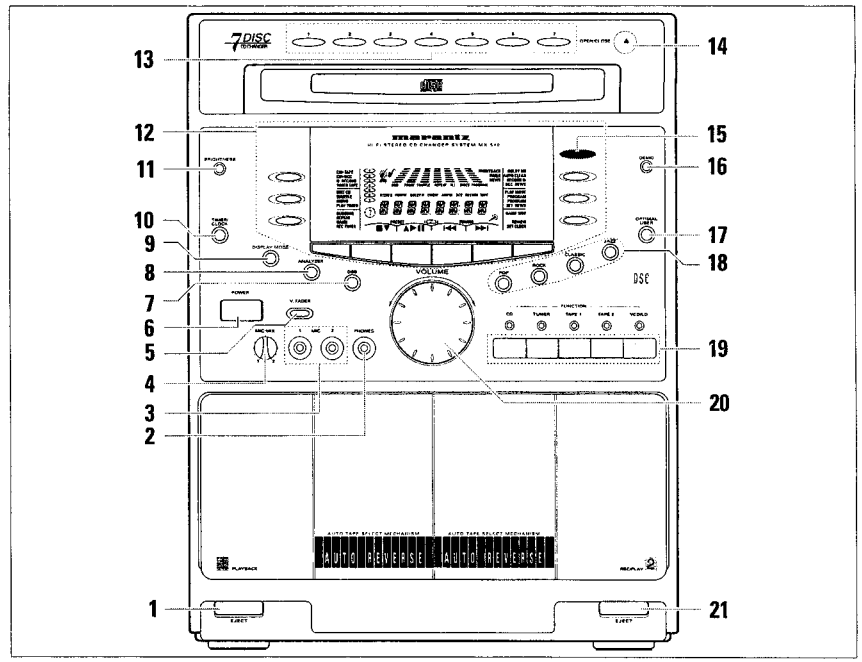

Front panel

1 **EJECT** ..... to open the cassette holder of TAPE 1
2 **PHONES** ..... 3.5 mm headphones socket
Inserting the plug will disconnect the speakers.
3 **MIC** ..... two 3.5 mm microphone sockets *(not for all versions)*
4 **MIC MIX** ..... to adjust the mixing level of the microphone signal *(not on all versions)*
5 **V. FADER** ..... to scroll between the different options to fade out the vocal of the original song *(not for all versions)*
6 **POWER** ..... to switch the set on and to standby
WHEN THE SET IS IN THE OFF POSITION (STAND-BY), THE APPARATUS IS NOT DISCONNECTED FROM AC SUPPLY MAINS.
7 **DBB** ..... **D**ynamic **B**ass **B**oost: to increase the bass level
8 **ANALYZER** ..... to switch the spectrum analyzer on and off
9 **DISPLAY MODE** to change the type of display information for the selected source
10 **TIMER/CLOCK** ... to select the timer/clock function
11 **BRIGHTNESS** .... to adjust the intensity of the display illumination
12 **System display and buttons**
13 **7 CD Direct play buttons**
14 **OPEN/CLOSE** .... to open and close the CD tray
15 **IR Sensor** ..... to receive signal from the remote control
16 **DEMO** ..... to switch on and off the demonstration mode
Digital sound control buttons:
17 **OPTIMAL-USER** **Digital sound control/setting button**
to select the desired equalizer setting:
OPTIMAL→USER 1→USER 2→OPTIMAL→...
18 **POP - ROCK - CLASSIC - JAZZ**
to adjust the sound to your individual taste
19 **Sound source selection buttons**
CD ..... to select the CD player
TUNER ..... to select the tuner
TAPE 1 ..... to select the playback tape deck
TAPE 2 ..... to select the recording/playback tape deck
VCD/LD ..... to select the external mode (external sources, e.g. Video CD, Laser Disc or TV sound)
20 **VOLUME** ..... to adjust the volume level
21 **EJECT** ..... to open the cassette holder of TAPE 2

English

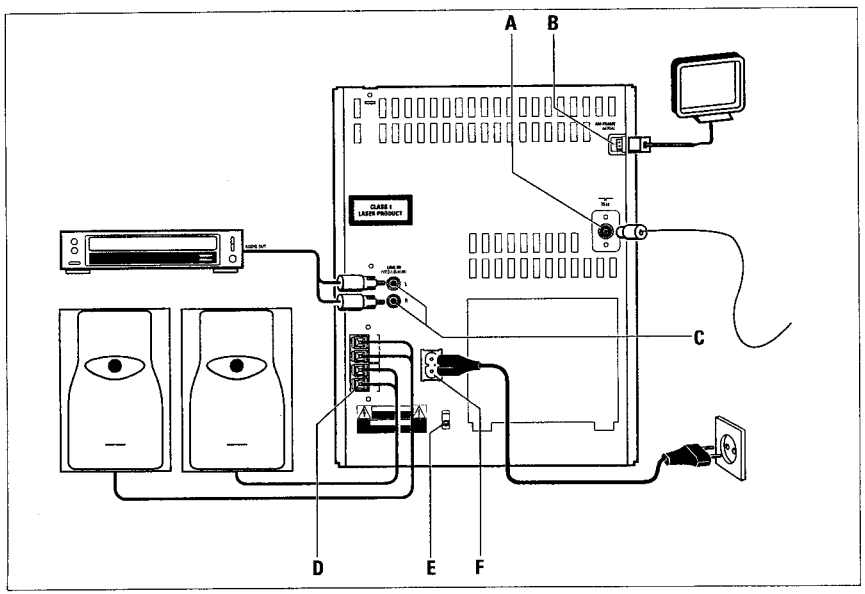

Before you start ...

- After unpacking the system, remove all protective material.
- ***Before connecting the system to the mains***, check if the mains voltage as shown on the type plate corresponds to your local mains voltage. If it does not, consult your dealer or service organisation.
  If your set is equipped with a voltage selector, set this selector to the local mains voltage *(not on all versions)*.

  The typeplate is located at the rear of the system.
- Place the system on a hard surface.
- Do not cover the vents and make sure that you leave sufficient room around the unit for ventilation.

Remote control:
- Open the battery compartment and insert the batteries supplied (type R03, UM-4 or AAA) as indicated.
- Remove the batteries if exhausted or if they will not be used again for a long period.

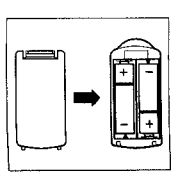

Connections

A **75 Ω** – Socket for a FM antenna, 75 Ohms.
Connect the supplied antenna wire with this socket. Find a position for best reception.
For good FM stereo reception, use an FM outdoor antenna or a connection to your house distribution system.

B **AM FRAME AERIAL** – Connector for the supplied AM frame antenna.
Connect the plug of the AM frame antenna to this socket and position the frame antenna for optimum reception. Do not place the frame antenna too close to the units, the wires or the boxes, as this may cause unwanted noise.

C **LINE IN (VCD/LD/AUX)** – Input sockets (Left/Right) for connecting VCD, LD or TV audio output.

D Terminals for two loudspeakers with an impedance of at least 6 ohms (see SPEAKER CONNECTIONS).

E **220-240V/110-127V** *(not on all versions)* – Set this voltage to the local mains voltage. If the selector must be reset, disconnect the mains lead first.

F **MAINS** – Mains socket. After all other connections have been made, connect the mains lead to the MAINS socket and the wall socket.

Speaker connections

One of the two wires of a loud-speaker cable is marked, e.g. with a colour or rib.

1 The marked wire should be connected to the red terminal and the unmarked one to the black terminal.

2 Make sure that the colour combination of wire and terminal is the same for each loudspeaker.

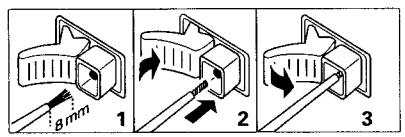

Positioning of the speakers
- You will find the best speaker position by experimenting.
  Placing the speakers on the floor will increase the bass response.
  Placing the speakers behind curtains, furniture etc. will reduce treble response and the stereo effect.
  You will obtain the ideal position when the two front speakers and the listening position build an equilateral triangle and the speakers are at ear-height.

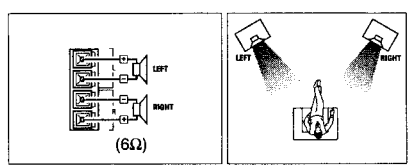

English

Remote control functions

- Always first select the desired sound source and then press the required function key (for example CD + PLAY ▶ or TAPE + PLAY ▶.

  Notes:
  - *The remote control remains tuned to the selected sound source until another sound source button on the remote control is pressed.*
  - *The corresponding LED indicator above the sound source buttons on the system flashes when its source is operated by the remote control.*
  - *You can only control TV/VCR if this unit uses the RC-5 remote control system.*
  - *Pressing TV/VCR will first switch on the TV set and after 1 sec the whole audio set.*
    If TV/VCR is selected, the STANDBY button will first switch the TV set to standby and after 1 sec. the whole set.
  - *Pressing TV/VCR for more than 1 sec will select the external source that is connected via the LINE IN sockets.*

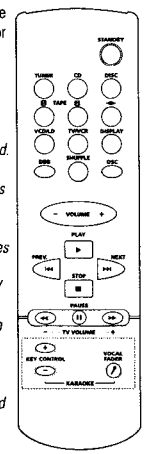

STANDBY ..... to switch the system to the standby mode
TUNER - CD - TAPE 1 - TAPE 2 - VCD/LD - TV/VCR sound source selection buttons
◀ ▶ SIDE ..... ***TAPE 1 or 2:*** to select the front or back side of the tape (FRONT/BACK)
DISC ..... ***CD:*** to select a CD (1-7)
DISPLAY ..... to change the type of display information for the selected source
SHUFFLE ..... ***CD:*** to switch on/off the shuffle feature
DBB ..... to increase the bass level
DSC ..... to select the desired sound setting:
POP→ROCK→CLASSIC→JAZZ→
OPTIMAL→USER 1→USER 2→POP→...
VOLUME – + ... to adjust the volume level of the audio system
PLAY ▶ ..... ***CD, TAPE 1 or 2, VCR:*** to start playback
⏮ PREV./NEXT ⏭ ..... ***TUNER:*** to select a radio preset station
CD: to select the beginning of the current/ previous or a subsequent track
TV: to select a TV preset station
STOP ■ ..... ***CD, TAPE 1 or 2, VCR:*** to stop playback
◀◀ ▶▶ ..... ***TUNER:*** to tune to a radio station
CD: to search a particular passage
TAPE 1 or 2, VCR: to wind the tape
PAUSE ❚❚ ..... ***CD, TAPE 1 or 2, VCR:*** to interrupt playback
TV VOLUME – + ... ***TV:*** to adjust the volume
VOCAL FADER ..... to reduces or fades out the vocal of the original song *(not on all versions)*
KEY CONTROL – + ... ***KARAOKE:*** to adjust the pitch of the vocal *(not on all versions)*

Switching on and off/standby

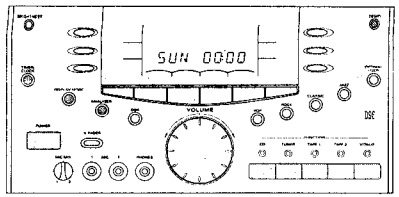

- ***To switch on the unit***, press POWER on the unit or any sound source button on the unit or on the remote control.
  → The display illumination comes up with full intensity. The selected sound source is indicated on the display and the respective LED indicator above the sound source button lights up.
- ***To switch the unit to standby mode***, press POWER on the unit or STANDBY on the remote control.
  → The system is in standby mode. The display illumination is half dimmed and the display shows the day and time.
- ***To switch off the unit***, remove the mains plug from the wall socket.

Notes:
- You can also switch on the set by pressing DISPLAY MODE, ANALYZER, CLOCK-TIMER or DEMO.
- The clock memory will be maintained for only ten minutes after the power supply is interrupted.

Adjusting the display illumination

- You can change the intensity of the display illumination by pressing BRIGHTNESS.
  → When the system is switched on, the illumination switches from FULL INTENSITY→HALF INTENSITY→OFF→FULL ...
  → In standby mode, the illumination switches from HALF INTENSITY→OFF→HALF ... When the display is off, the power input is reduced to about 1 Watt.

Note: When switching on the system, the display always comes on with full intensity.

System display and buttons

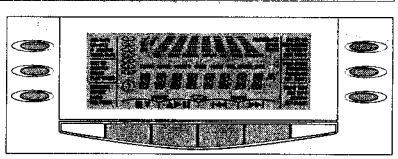

When you select a sound source or the timer/clock mode, the functions available for the chosen source or the timer/clock mode light up in the display.

By using the 10 buttons around the display field, you can select the desired function. These functions are explained in the appropriate chapters in detail.

KARAOKE – microphone mixing *(not on all versions)*

Using a microphone you can mix your voice with any sound source:

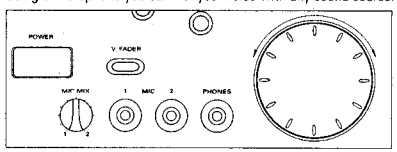

1 To prevent acoustic feedback e.g. a loud howling sound, set the control MIC MIX to the minimum before you plug in the microphone.
2 Connect either 1 or 2 suitable microphones to the MIC sockets.
3 Select the desired sound source CD, TUNER, TAPE 1, TAPE 2 or VCD/LD and start its playback.

- Adjust the mixing ratio with the MIC MIX control.

- You can fade out the vocal on a ***CD or a tape*** in 4 different ways: Press VOCAL FADER several times until the desired option is displayed:

- VOCAL FADER: reduces/fades out the vocal of the original song.

- AUTO VOCAL FADER: reduces/fades out the vocal of the original song only for the time you use the microphone. The vocal is faded in again as soon as you stop singing. When (AUTO) VOCAL FADER is activated, this symbol (flashes) lights up in the display.

- MULTIPLEX *(for special KARAOKE CDs only!)*: suppresses the right channel (= vocal) of the KARAOKE CD. The music is audible on both channels.

- AUTO MULTIPLEX *(for special KARAOKE CDs only!)*: suppresses the right channel (= vocal) only for the time you use the microphone. The music is audible on both channels. The vocal is faded in again as soon as you stop singing. When (AUTO) MULTIPLEX is activated, this symbol (flashes) lights up in the display.

- OFF: The VOCAL FADER feature is switched off.

Notes:
- It is also possible to record the mixed signal. However, mixing is not possible in DUBBING mode (copying one tape to another).

- If you don't want to record via the microphone, unplug the microphone to avoid accidental mixing with the recording source.

- Due to the recording technique of some CDs it is unfortunately possible that the feature (AUTO) VOCAL FADER does not work.

- We do not recommend to use MULTIPLEX or AUTO MULTIPLEX with a conventional AUDIO CD. The music information would not be transmitted completely and you would only receive mono sound.

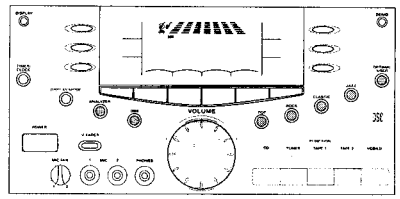

VOLUME – Adjusting the volume

For high precision adjustment, the volume is designed with an endless rotary movement.

Adjust the volume to a higher or lower level by turning the VOLUME control clockwise or counter clockwise.

ANALYZER – Spectrum Analyzer

The graph bars in the centre of the display show the sound levels. The spectrum analyzer shows continuously the actual frequency distribution of the current sound.

- By pressing the ANALYZER button, the spectrum analyzer bars are either hidden or shown.
  → The display shows either ANALYZER OFF or ANALYZER ON.

Note: When switching on the system, the spectrum analyzer is always switched on.

DBB – Dynamic Bass Boost

- The bass response can be enhanced in 3 steps: every time you press the DBB button, the bass is enhanced even stronger or the DBB feature is switched off.
  → The display shows the selected DBB level: DBB 1→DBB 2→DBB 3→DBB OFF→DBB 1→...

POP / ROCK / CLASSIC / JAZZ

- Press POP, ROCK, CLASSIC or JAZZ (or DSC on the remote control) to enhance the type of music you are listening to.
  → In the display the belonging icon lights up. A realistic atmosphere for the selected style of music is created.

Switchable "OPTIMAL-USER" sound presets

- By repeatedly pressing OPTIMAL-USER, the display shows the different equalizer settings: OPTIMAL→USER 1→USER 2→OPTIMAL→...

OPTIMAL: This equalizer setting is specially tuned to the acoustics of the supplied LS 540MX speakers.
USER 1 / USER 2: Here you have the possibility to set your individual sound or to listen to your own equalizer setting.

USER 1 / USER 2
Setting the equalizer

1 Press OPTIMAL-USER several times until the display shows USER 1 or USER 2.
  → The display function buttons light up and flash for 7 sec.

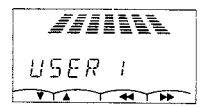

2 Use the display buttons ▼ ▲ and ◀◀ ▶▶ to adjust
  -bass (left two bars),
  -middle tones (middle three bars) and
  -treble (right two bars).
  → The graph bars change according to your settings.
  → If no button is pressed for 90 seconds, the sound setting mode is left automatically and the last changes are stored in the memory.

3 You can also leave the sound setting mode by pressing OPTIMAL-USER again.
  → The new sound setting is stored.

Note: From the moment the buttons ▼ ▲ and ◀◀ ▶▶ light up, you have got 7 seconds to start adjusting the sound. If none of these buttons are pressed within 7 seconds, the sound setting mode is left again.

English

Tuning to radio stations

1 Press TUNER on the unit or on the remote control.
→ First TUNER appears on the display and after a few seconds it will show the current frequency or the station name if available. The available display button functions light up:

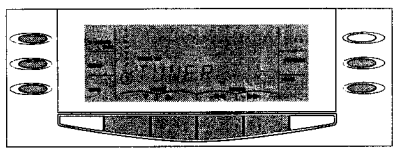

2 Select the desired waveband by repeatedly pressing BAND.

3 Hold down TUNING ◀◀ or ▶▶ (◀◀ or ▶▶ on the remote control) until you approach the required frequency.
→ As long as the button is pressed, the digits on the display change according to the frequency.
→ As soon as you release the button, SEARCH appears on the display and the tuner searches the next station of sufficient strength. If the frequency has already been stored, the preset number is also displayed.

4 Press MONO to switch over to mono reception if there is interference noise caused by poor FM stereo reception.
→ Briefly MONO is displayed and the icon STEREO disappears.
→ When you switch back to stereo reception, the display will briefly show STEREO.

5 Repeat this procedure until you find the desired stations.

Note: If you briefly press TUNING ◀◀ or ▶▶ (◀◀ or ▶▶ on the remote control), the frequency changes step by step.

Programming radio stations (preset stations)

Automatic programming
30 radio stations can be stored automatically in the memory. This function will clear the old preset numbers. If less than 30 radio stations are found, the remaining preset numbers will not be changed.

1 Press TUNER on the unit or on the remote control.

2 Press PROGRAM to enter the programming mode.

3 Select the waveband by repeatedly pressing BAND.

4 Press AUTO to start the automatic programming.
→ The available display button functions light up and AUTO starts flashing:

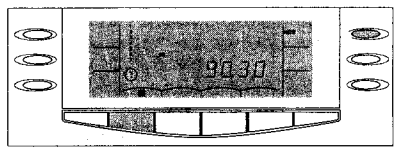

→ The tuner automatically tunes to stations in the selected waveband. If less than 30 stations of sufficient strength are found, the tuner will stop.
→ The last newly stored preset number is automatically tuned in.

• To stop the automatic programming, press AUTO or ■.

Notes:
- If you want to maintain some old presets, for example preset 1-9, select preset 10 ***before starting automatic programming:*** *now only the presets 10 up to 30 will be programmed.*

Manual programming
You can store up till 30 radio stations in the memory.

1 Press TUNER on the unit or on the remote control.

2 Press PROGRAM to enter the programming mode.
→ The available display button functions light up and PROGRAM starts flashing:

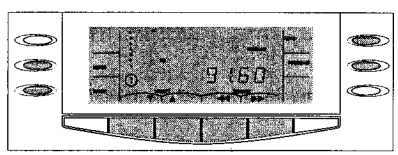

3 Select the desired waveband by repeatedly pressing BAND.

4 Tune to the station to be programmed with TUNING ◀◀ or ▶▶ (or ◀◀ or ▶▶ on the remote control), as described earlier.

5 If desired, switch over to FM mono reception by pressing MONO.

6 Press PRESET ▲ or ▼ to allocate a number from 1 to 30 to the preset station (on the remote control use the buttons ⏮ or ⏭).

7 Press PROGRAM to confirm the setting.
→ The frequency, preset number and stereo setting are now entered in the memory.

English

Selecting a preset station

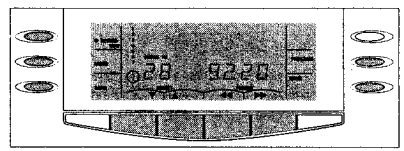

• Press PRESET ▲ or ▼ until the desired preset number appears on the display (on the remote control use the buttons ⏮ or ⏭).

RECORD TAPE ●

1 As soon as you press RECORD TAPE ●, the current sound will be recorded on TAPE 2, provided a tape suitable for recording is loaded.

2 To stop recording, press ■ (or STOP ■ on the remote control).

Switchable LW waveband *(not on all versions)*

Some countries do not have a LW waveband. In some versions it is possible to delete (include) the LW waveband from the BAND menu.

• Press BAND to switch to AM.

• Keep the sound source button TUNER pressed for more than ***5 sec***.
→ The display shows either LW OFF or LW ON.

Switchable AM GRID *(not on all versions)*

The frequency step can be changed if necessary. In North and South America, the frequency step between adjacent channels in the "MW" band is 10 kHz. In other parts of the world, it is 9 kHz. Usually the frequency step has been preset in the factory for your area.

• Press BAND to switch to AM.

• Keep the sound source button TUNER pressed for more than ***5 sec***.
→ The display shows either GRID 10 or GRID 9.

Inserting the CDs

Warning!
- This set is designed for normal CDs. Therefore, do not use any accessories like disc stabilizer rings or CD treatment sheets, etc. as offered on the market, because it may cause jamming of the changer mechanism.
- Do not load more than 1 disc into 1 tray.

1 Press CD on the unit or on the remote control.
→ Briefly CDC appears on the display.
If there is no CD in the CD tray, the display will show NO DISC.
The available display button functions light up:

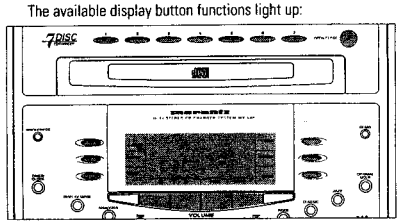

2 Press OPEN/CLOSE on the unit to open the CD tray.
→ The display shows OPEN.

3 Insert a CD, printed side up.

4 Close the tray by pressing OPEN/CLOSE.
→ The display shows READING and thereafter the total number of tracks and the total playing time. An oval around the tray number (1-7) indicates when a tray is loaded.

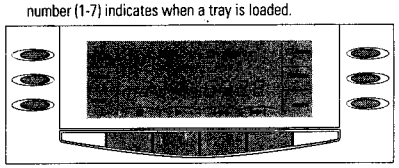

5 To load another CD, press the desired disc button 1 - 7 (or DISC on the remote control).
→ The CD tray opens automatically when there is no CD inserted.

Note: The tray will also close if you press ▶, any disc button 1 - 7 or SHUFFLE or gently push against the CD tray.

Playing a CD

1 Press ▶ (or PLAY ▶ on the remote control) to start playback of the entire CD.
→ Playback starts with the first track of the selected CD. The display shows the current track number and its elapsed playing time. The playing CD is indicated by a rotating red circle.
→ When all the tracks of all CDs have been played, the CD player stops and the total number of tracks and total playing time of the last played CD are shown on the display.

2 To stop CD play, press ■ (STOP ■ on the remote control)

- If you want to select the CD to start playback with, press the desired disc button 1 - 7 (or DISC on the remote control).
→ Playback starts automatically if the selected tray is loaded.
- You can interrupt CD play by pressing II (PAUSE II on the remote control). Continue CD play by pressing ▶ (PLAY ▶ on the remote control).
- During play, the display normally shows the elapsed playing time of the track currently played. You can change the type of the time information, by repeatedly pressing DISPLAY MODE on the unit:
→ The display shows in turn: REMAINING TIME OF CURRENT TRACK→ REMAINING TIME OF CD→ELAPSED TIME OF CURRENT TRACK→...

Notes:
- CD play also stops if you press OPEN-CLOSE or select another sound source.
- The system will switch to standby automatically, if no button is pressed for more than 15 minutes after CD play has finished.

Selecting another track

- Briefly press ⏮ or ⏭ once/several times to skip to the beginning of the current/previous or subsequent track (on the remote control use the buttons ⏮ or ⏭).
→ The display shows the selected track number.
→ During play: CD play continues automatically with the selected track.
→ In the stop or pause position: press ▶ to start playing the selected track
(or PLAY ▶ on the remote control).

Searching for a passage during CD play

1 Hold down ⏮ or ⏭ (or ◀◀ or ▶▶ on the remote control) to find a particular passage in the forward or backward direction.
→ The volume is automatically reduced to a low level.

2 Release the button when you have reached the desired passage.

Note: In the shuffle mode and when playing a program, searching is only possible within the playing track.

Selecting another source during CD play

- You can select another sound source during CD play. If you select the CD source again, the CD player will return to the original mode: PLAY, SHUFFLE, REPEAT or PROGRAM.
→ CD play will resume at the position where it was interrupted.
Note: CD play cannot be resumed if the unit has been switched to standby in the meantime.

RECORD TAPE ●

1 As soon as you press RECORD TAPE ●, the current CD-sound will be recorded on TAPE 2, provided a tape suitable for recording is loaded.

2 To stop recording and CD play, press ■ (or STOP ■ on the remote control). If you only want to stop recording, press TAPE 2 first, and then press ■.

REPEAT – repeating a track, a CD or all CDs

1 Press REPEAT on the unit several times until the desired option is displayed:
REPEAT: The current track is played repeatedly.
REPEAT ALL: The entire CD (or program) is played repeatedly.
REPEAT ALL DISCS: All loaded CDs are played repeatedly.

→ During play: The selected repeating mode is automatically executed.
→ In the stop position: press ▶ to start CD play.

2 To return to normal CD play, press REPEAT until all related indications (REPEAT ALL DISCS) disappear from the display.

SHUFFLE – playing in random order

1 Press SHUFFLE on the unit (or on the remote control) several times until the desired option is displayed:
SHUFFLE: All tracks of the current CD are played in random order.
SHUFFLE ALL DISCS: All tracks of all loaded CDs are played in random order.

→ The selected shuffle mode is automatically executed.

2 To return to normal CD play, press SHUFFLE on the unit (or on the remote control).

Note: You can combine some of the REPEAT and SHUFFLE features at the same time and for example repeatedly play the entire CD or program in random order (SHUFFLE REPEAT ALL).

Programming track numbers

You may select a number of tracks and store these in the memory in the desired sequence. You may store any track more than once. At most, 40 tracks can be stored in the memory. The display will show the message FULL, if you exceed the maximum of 40 tracks.

1 Press PROGRAM to enter the CD programming mode.
→ The available display button functions light up and PROGRAM starts flashing:

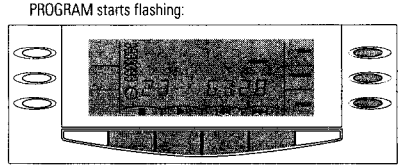

2 Select the desired CD by pressing the appropriate disc button 1 - 7 (or DISC on the remote control).

3 Select the desired track by pressing with ⏮ or ⏭ (or ⏮ or ⏭ on the remote control) .

4 As soon as the desired track is displayed, press PROGRAM to store the track.
→ The display shows the total number of stored tracks, followed by the just stored track number. "PROG" behind the track number indicates, this track number is stored.

5 Select and store in this way all desired tracks.

6 Quit the CD programming mode by pressing ■ (or STOP ■ on the remote control) or
immediately start playback of the program by pressing ▶ or SHUFFLE (or PLAY ▶ or SHUFFLE on the remote control).

Reviewing your settings
- You can review your settings by pressing REVIEW.
→ The display shows in sequence all stored track numbers and the corresponding CD.
During CD play only the tracks that still have to be played are shown on the display.

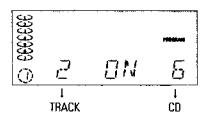

Note: If you press REVIEW when no program is available, the message NO PROGRAM will appear on the display.

Clearing the entire program (in the stop position)
- Press CLEAR to clear the program.
→ On the display PROGRAM CLEARED briefly lights up and the flag PROGRAM disappears.

Note: The program will also be cleared if you interrupt the power supply.

Clearing a track from a program
1 Press PROGRAM to enter the CD programming mode.

2 Select the disc and track to be cleared by pressing disc button 1 – 7 and ⏮ or ⏭ (disc and ⏮ or ⏭ on the remote control).

3 As soon as the number you wish to clear is displayed, press CLEAR.
→ The cleared track number and CLEAR appear briefly.

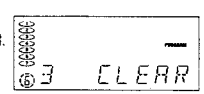

Notes: - You will clear all tracks of one specific CD by opening the CD tray when this CD is loaded.
- You can also clear one particular track number during the program review: the currently displayed track number will be cleared when you press CLEAR.

English

Inserting a tape

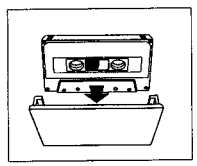

1 Press EJECT to open the cassette compartment.

2 Insert the tape with the open side down.
→ The display shows 000.
→ The deck detects the presence of a tape in the cassette compartment and automatically selects the tape type (NORMAL or CrO_2).

Playing a tape

1 Press TAPE 1 or TAPE 2 on the unit or on the remote control.
→ Briefly TAPE 1 or TAPE 2 appears on the display.
The available display button functions light up:

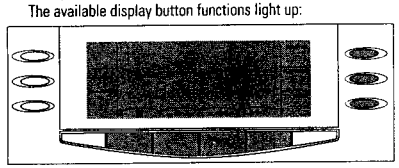

2 Insert a recorded tape with the open side down.

3 Select the tape side by pressing SIDE on the unit (or on the remote control) several times until the desired indicator lights up:
→ FRONT: the visible side will be played.
BACK: the invisible backside will be played.
→ The tape counter is set to 000.

4 If desired, switch on the Dolby NR system by pressing DOLBY NR.

5 Press ▶ (or PLAY ▶ on the remote control) to start playback.
→ The display shows the tape counter.

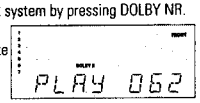

6 Press ■ (or STOP ■ on the remote control) if you want to stop playback before the end of the tape.

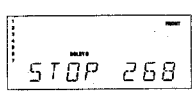

Notes:
- You can set the tape counter to 000 by pressing SIDE twice.

- If no button is pressed for more than 15 minutes after playback has finished, the system automatically switches to standby.

Fast winding

During playback

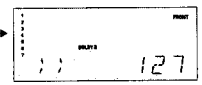

1 Hold down ◀◀ or ▶▶ (or ◀◀ or ▶▶ on the remote control) to find a particular passage in the forward or backward direction.
→ The volume is automatically reduced to a low level.

2 Release the button when you have reached the desired passage.

In the stop position

1 Briefly press ◀◀ or ▶▶ (or ◀◀ or ▶▶ on the remote control).

2 Stop winding by pressing ■ (or STOP ■ on the remote control).

Play mode

- You can select the playback mode by pressing PLAY MODE several times until the desired indicator lights up:

  to play (record) one side. At the end of the first side the recorder stops.

  to play (record) both sides once. At the end of the first side, the tape direction is reversed and the recorder stops at the end of the second side.

  for non-stop playback. The deck reverses the tape direction (up to ten times) whenever reaching the end of the tape side. To stop, press ■.

  1 2 for non-stop playback on both decks: The deck reverses the tape direction (up to ten times on each deck) when reaching the end of the tape side. Playback of both tape sides rotates between deck 1 and deck 2. To stop, press ■.

Note: For recording only the play modes and are available.

Dolby B Noise Reduction System

The Dolby B NR System is manufactured under license from Dolby Laboratories Licensing Corporation. The word Dolby and the DD symbol are trademarks of Dolby Laboratories Licensing Corporation.

- Switch the Dolby B NR on and off with the DOLBY NR button.

Notes:
- A tape recorded with the Dolby B NR system should also be played in the Dolby B NR mode. If you forget to operate the DOLBY NR button, the treble may be reproduced too strongly or too faintly.

- Dolby NR button has no influence during dubbing (copying from TAPE 1 to TAPE 2). An original tape recorded with Dolby B NR automatically produces a copy with Dolby B NR.

English

General information on recording

– Recording is permissible insofar as copyright or other rights of third parties are not infringed.

– At the very beginning and end of the tape, no recording will take place during the 7 seconds when the leader tape passes the recorder heads.

– When a recording is active, most functions are disabled. RECORDING ACTIVE will appear on the display when a wrong button is pressed.

– In general, the recording level is set automatically. The recording is not affected by the controls VOLUME, DBB, POP, ROCK, CLASSIC, JAZZ and OPTIMAL-USER.

Protecting tapes against accidental erasure

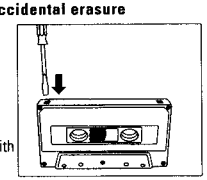

- Keep the tape side to be safeguarded in front of you and break out the left tab. Now, recording on this side is no longer possible.
- To render this safeguard ineffective, cover the aperture with a piece of adhesive tape.
- For Chrome tape make sure that you do not cover the hole opening.

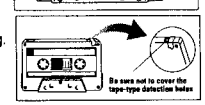

Recording from a CD

1 Insert a CD and, if desired, program track numbers.

2 Press TAPE 2 on the unit or on the remote control.
→ The available display button functions light up:

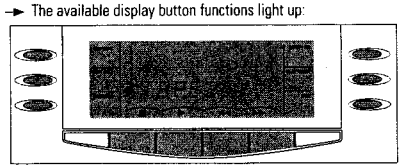

3 Insert a blank tape into deck 2.

4 Select the tape side by pressing SIDE: FRONT or BACK.

5 Select the play mode by pressing PLAY MODE until the desired indicator lights up: or .

6 If desired, switch on the Dolby NR system by pressing DOLBY NR.

7 If you want to make a "EDIT CD recording", follow from here the instructions for EDIT CD.

8 Start the recording by pressing CD ▶TAPE.
→ The display shows COPY.
With a delay of 7 sec (leader tape of the cassette), playing of the CD or program starts automatically. At the end of the first side, recording stops somewhere within the running track.

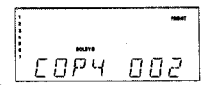

→ When is selected, the tape direction is reversed and recording continues with the beginning of the incompletely recorded track.
→ Recording will stop when it's finished according to the chosen play mode or when the CD player reaches the end of the CD or the program.

- Press ■ (or STOP ■ on the remote control) to stop the recording at an earlier stage.

EDIT CD – automatic CD track selection by specifying the tape length

To prevent that at the end of the tape the recording is interrupted somewhere within a track, you can use the EDIT CD feature. However, it can only be used for CDs with a maximum of 30 tracks.

The unit automatically selects the total number of tracks that will fit onto each tape side.
The original order of tracks will not be changed.

1 Press EDIT CD.
→ SELECT TAPE LENGTH and C60 appear on the display.

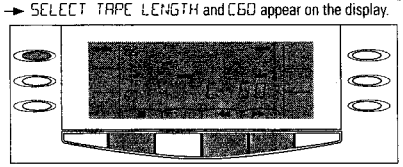

2 Press ◀◀ or ▶▶ until the desired tape length appears on the display.
→ The display shows in turn:
C60→C90→C100→C120→C30→C45→C60→...

3 Start the recording by pressing CD ▶TAPE.
→ With a delay of 7 sec (leader tape of the cassette), playing of the CD or program starts automatically.
→ Recording will stop when it's finished according to the chosen play mode or when the CD player reaches the end of the CD or the program.

- Press ■ (or STOP ■ on the remote control) to stop the recording at an earlier stage.

- You can change the type of the CD time information, by repeatedly pressing DISPLAY MODE on the unit:
→ The display shows in turn: REMAINING TIME OF CURRENT TRACK→ REMAINING TIME OF CURRENT TAPE SIDE→ELAPSED TIME OF CURRENT TRACK→...

Dubbing tapes (copying from TAPE 1 to TAPE 2)

1 Insert a recorded tape into deck 1 and a blank tape into deck 2.

2 Press TAPE 1 to prepare the deck for dubbing:
- Select the tape side by pressing SIDE: FRONT or BACK.
- Select the play mode by pressing PLAY MODE until the desired indicator lights up: ⇄ or ⇉.

3 Press TAPE 2 to prepare the deck for recording:
- Select the tape side by pressing SIDE: FRONT or BACK.
- Select the play mode by pressing PLAY MODE until the desired indicator lights up: ⇄ or ⇉.

4 Press DUBBING and thereafter select the dubbing speed by pressing ◀◀ or ▶▶.
→ The display shows NORMAL (normal speed) or FAST (high speed). During high-speed dubbing, the sound is reduced to a low volume.

5 Start recording by pressing DUBBING.
→ Both decks start running and either NORM 000 (normal speed dubbing) or FAST 000 (fast speed dubbing) appears.
→ Recording will stop when one or both sides of the tape are full (depending on the chosen play mode).

- Press ■ (or STOP ■ on the remote control) to stop the recording at an earlier stage.

Notes:
- PRESS STOP FIRST will light up if you press SIDE: you cannot reverse the playback direction during dubbing.

- During dubbing you can listen to any other sound source.

RECORD TAPE ●

1 As soon as you press RECORD TAPE ●, the current sound (CD, TUNER, TAPE 1 or VCD/LD) will be recorded on TAPE 2.

Erase an old tape by recording a silence:
Select CD without starting CD play and press RECORD TAPE ●.

2 To stop recording, press ■.

General

The display shows the weekday and the time. The clock display will flash and has to be set
- when you first plug the unit into the mains, or
- if the power supply was interrupted for longer than 10 minutes.

- Press TIMER/CLOCK to enter the timer/clock mode.
→ The timer/clock display with its available display button functions appears:

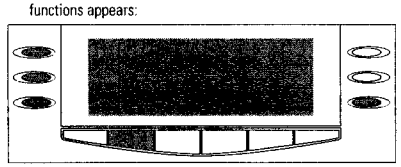

- To leave the timer display, press ■, TIMER/CLOCK, POWER or any sound source selection button.

Notes:
- The clock and the timer cannot be set with the remote control.

- If no button is pressed for more than 90 seconds, the clock setting mode is left automatically without storing the last changes.

Setting the clock

1 Press TIMER/CLOCK to enter the timer/clock mode.
→ The timer/clock display as shown above appears.

2 Press SET CLOCK to enter the clock setting mode.
→ The function indicator SET CLOCK starts flashing.

3 Select the day by pressing ▲ or ▼ until the correct day is indicated.

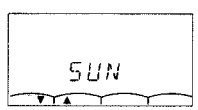

4 Confirm the day by pressing SET CLOCK.
→ The hour and the minute digits appear.

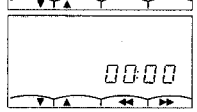

5 Adjust the hours by using ▲▼ and the minutes by using ◀◀ ▶▶.
→ When pressing the buttons briefly, the digits will change step-by-step. By pressing longer, the running speed will increase after a few seconds.

6 Press SET CLOCK to store the setting and to leave the clock setting mode.
→ The clock starts running.

Setting the timer for a radio recording

1 Insert a blank tape into deck 2.

2 Press TIMER/CLOCK to enter the timer/clock mode.
→ The timer/clock display appears.

3 Press REC TIMER to enter the timer setting mode.
→ The function indicator REC TIMER starts flashing and a radio preset appears.

4 Press ▲ or ▼ until the desired preset station is indicated.

5 Confirm the preset station by pressing REC TIMER.
→ The message ON and the time appear.
The ***recording start time*** must be entered.

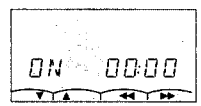

6 Adjust the hours and the minutes by using ▲▼ and ◀◀ ▶▶.

7 Confirm the start time by pressing REC TIMER.
→ The message OFF and the time appear.
The ***recording stop time*** must be entered.

8 Adjust the hours and the minutes by using ▲▼ and ◀◀ ▶▶.

9 Press REC TIMER to confirm the settings and to leave the timer setting mode.
→ The timer is activated and TIMER lights up on the display.

Setting the timer for playback

1 Press TIMER/CLOCK to enter the timer/clock mode.
→ The timer/clock display appears.

2 Press PLAY TIMER to enter the timer setting mode.
→ The function indicator PLAY TIMER starts flashing and the last selected timer sound source appears.

3 Press ▲ or ▼ until the desired sound source is indicated.

4 Confirm your selection by pressing PLAY TIMER.
→ If you have selected TUNER, press ▲ or ▼ to select the desired preset station.
→ If you have selected CD, insert a CD.
→ If you have selected TAPE (TAPE 1or TAPE 2), insert a prerecorded tape into the selected cassette compartment.

5 Confirm your selection by pressing PLAY TIMER.
→ The message ON and the time appear.
The ***start time*** must be entered.

6 Adjust the hours and the minutes by using ▲▼ and ◀◀ ▶▶.

7 Press PLAY TIMER to confirm the settings and to leave the timer setting mode.
→ The timer is activated and TIMER lights up on the display.

At the preset start time ...

→ The power is turned on or, if another sound source is selected, the set switches to the preset source.
The preset source comes on automatically.

→ 15 minutes after playback of the CD or the tape has finished, the system switches to standby.
If the timer is activated with the TUNER mode, the sound remains on until you switch the system to standby.

Notes:
- If the set was activated from standby mode and no button is pressed for more than 40 minutes, the set switches to standby again.

- If there is the same start time for REC TIMER and PLAY TIMER, the REC TIMER will be activated.

- If you are recording at the time the timer is activated, the timer function will be cancelled.

Reactivating/deactivating the timer

1 Press TIMER/CLOCK to enter the timer/clock mode.
→ The timer/clock display appears.

2 To switch off or to reactivate a timer function, press TIMER several times until the required indication appears:

→ PLAY (playback) and the programmed start time for activating the PLAY TIMER.

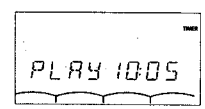

→ REC (recording) and the programmed start time for activating the REC TIMER.

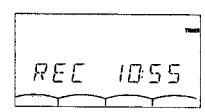

→ BOTH ON - both PLAY TIMER and REC TIMER are activated.

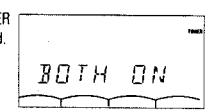

→ OFF for switching the timer off.

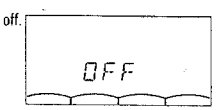

English

General maintenance

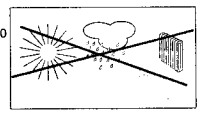

- Do not expose the set, CDs or tapes to humidity or rain, sand or to excessive heat caused by heating equipment or direct sunlight.
- The mechanical parts of the set contain self-lubricating bearings and must not be oiled or lubricated!

- You can clean the set with a soft, slightly dampened chamois leather. Do not use any cleaning agents as they may have a corrosive effect.

TAPE decks

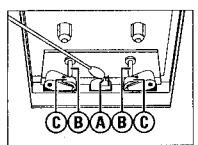

To ensure a good recording and playback quality, clean the head Ⓐ, the capstans Ⓑ and the rubber pressure rollers Ⓒ after approx. 50 hours of operation.

- Use a cotton bud slightly moistened with alcohol or a special head cleaning fluid.

Note: Cleaning of the heads Ⓐ can also be done by playing a cleaning tape through once.

CD player and CD handling

- The lens may cloud over when the set is suddenly moved from cold to warm surroundings. Playing a CD is then not possible. Leave the set in a warm environment until the moisture evaporates.

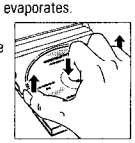

- To take the CD out of its box easily, press the centre spindle while lifting the CD.
- Always pick up the CD by the edge and put it back in its box after use.

- To clean the CD, wipe in a straight line from the centre towards the edge using a soft, lint-free cloth. A cleaning agent may damage the CD!
- Never write on a CD or attach any sticker to it.

English

- If a fault occurs, first check the points listed below before taking the set for repair.
- If you are unable to remedy a problem by following these hints, consult your dealer or service centre.

WARNING:

Under no circumstances should you try to repair the set yourself, as this will invalidate the guarantee.

PROBLEM	POSSIBLE CAUSE	REMEDY
No power	Mains lead is not securely connected.	Connect the mains lead properly.
No or poor sound	VOLUME is not turned up.	Turn up the VOLUME.
	Speakers are wrongly or not connected.	Check the speaker connections.
	Unsuited speakers are used.	Use recommended speakers, impedance 6 Ohms.
	Badly matching equalizer setting for the given type of music.	Choose a matching equalizer setting for the given type of music.
	Headphones are connected.	Disconnect the headphones.
Reversed left and right sound	Speakers are wrongly connected.	Connect the speaker cables correctly.
System does not react to operation of any button	Electrostatic discharge.	Disconnect the set from power supply and reconnect it after a few seconds.
Poor radio reception	FM antenna is not connected.	Connect the FM antenna.
	Interference caused by the vicinity of electrical equipment like TVs, video recorders, computers, etc.	Keep the set away from electrical equipment.
The CD skips tracks	CD is damaged or dirty.	Replace or clean the CD.
Poor tape sound quality	Dust and dirt on the heads, capstan or pressure roller.	Clean the heads, capstan and pressure roller, see maintenance.
Remote control does not work	The distance to the system is too large.	Reduce the distance.
	Wrong sound source is selected.	Select the sound source before pressing the functional button.
	Batteries are incorrectly inserted.	Insert the batteries correctly.
	Batteries are exhausted.	Replace the batteries.

DISPLAY INDICATION	POSSIBLE CAUSE	REMEDY
NO DISC *or* CANNOT READ	CD is badly scratched or dirty.	Replace or clean the CD, see maintenance.
	No CD inserted.	Insert a CD.
	CD inserted upside down.	Insert a CD with label upwards.
	Laser lens is steamed up.	Wait until the lens has acclimatized.
WRONG TRACK	The selected track number does not exist on this CD or is not included in this program.	Select a correct track number.
NO TAPE	No tape inserted.	Insert a tape.
TAPE PROTECTED	Tape is protected against recording.	Replace the tape or undo the protection.
RECORDING ACTIVE	A recording is active.	Stop the recording or wait until it is finished.
EDIT NOT POSSIBLE	The EDIT CD feature can only be used for CDs with a maximum of 30 tracks.	Use another CD with less than 30 tracks or create a program with less than 30 tracks.

Warnings & Safety

ESD

(GB) WARNING
All ICs and many other semiconductors are susceptible to electrostatic discharges (ESD). Careless handling during repair can reduce life drastically.
When repairing, make sure that you are connected with the same potential as the mass of the set via a wrist wrap with resistance. Keep components and tools at this potential.

(F) ATTENTION
Tous les IC et beaucoup d´autres semi-conducteurs sont sensibles aux décharges statiques (ESD). Leur longévite pourrait être considérablement écourtée par le fait qu´aucune précaution nést prise à leur manipulation.
Lors de réparations, s´assurer de bien être relié au même potentiel que la masse de l´appareil et enfileer le bracelet serti d´une résistance de sécurité.
Veiller à ce que les composants ainsi que les outils que l´on utilise soient également à ce potentiel.

(D) WARNUNG
Alle ICs und viele andere Halbleiter sind empfindlich gegenüber elektrostatischen Entladungen (ESD).
Unsorgfältige Behandlung im Reparaturfall kann die Lebensdauer drastisch reduzieren.
Sorgen Sie dafür, daß sie im Reparaturfall über ein Pulsarmband mit Widerstand mit dem Massepotential des Gerätes verbunden sind.
Halten Sie Bauteile und Hilfsmittel ebenfalls auf diesem Potential.

(NL) WAARSCHUWING
Alle IC´s en vele andere halfgeleiders zijn gevoelig voor electrostatische ontladingen (ESD).
Onzorgvuldig behandelen tijdens reparatie kan de levensduur drastisch doen vermindern. Zorg ervoor dat u tijdens reparatie via een polsband met weerstand verbonden bent met hetzelfde potentiaal als de massa van het apparaat.
Houd componenten en hulpmiddelen ook op ditzelfde potentiaal.

(I) AVVERTIMENTO
Tutti IC e parecchi semi-conduttori sono sensibili alle scariche statiche (ESD).
La loro longevità potrebbe essere fortemente ridatta in caso di non osservazione della più grande cauzione alla loro manipolazione. Durante le riparationi occorre quindi essere collegato allo stesso potenziale che quello della massa delápparecchio tramite un braccialetto a resistenza.
Assicurarsi che i componenti e anche gli utensili con quali si lavora siano anche a questo potenziale.

SAFETY

(GB)
Safety regulations require that the set be restored to its original condition and that parts which are identical with those specified be used.
Safety components are marked by the symbol ⚠

(D)
Bei jeder Reparatur sind die geltenden Sicherheitsvorschriften zu beachten. Der Originalzustand des Gerätes darf nicht verändert werden. Für Reparaturen sind Originalersatzteile zu verwenden.
Sicherheitsbauteile sind durch das Symbol ⚠ markiert.

(I)
Le norme di sicurezza estigono che l´apparecchio venga rimesso nelle condizioni originali e che siano utilizzati i pezzi di ricambiago identici a quelli specificati.
Componenty di sicurezza sono marcati con ⚠

(F)
Les normes de sécurité exigent que l'appareil soit remis à l'état d'origine et que soient utilisées les pièces de rechange identiques à celles spécifiées.
Les composants de sécurité sont marqués ⚠

(NL)
Veiligheidsbepalingen vereisen, dat het apparaat in zijn oorspronkeliijke toestand wordt teruggebracht en dat onderdelen, identiek aan de gespecificeerde, worden toegepast.
De Veiligheidsonderdelen zijn aangeduid met het symbool ⚠

(S) Varning !
Osynlig laserstrålning när apparaten är öppnad och spärren är urkopplad. Betrakta ej strålen.

(DK) Advarsel !
Usynlig laserstråling ved åbning når sikkerhedsafbrydere er ude af funktion. Undgå udsaettelse for stråling.

(FIN) Varoitus !
Avatussa laitteessa ja suojalukituksen ohitettaessa olet alttiina näkymättömälle laserisäteilylle. Älä katso säteeseen !

(F)
"Pour votre sécurite, ces documents doivent être utilisés par des spécialistes agrées, seuls habilités à réparer votre appareil en panne".

SERVICE HINTS

Service Tools

TORX screwdriver set SBC 163 ..... 4822 295 50145

Audio signal disc SBC 429 ..... 4822 397 30184
Test disc 5 (disc without errors) +
Test disc 5A (disc with dropout errors, black spots and fingerprints)
SBC 426/426A 4822 397 30096
Burn in test disc (65 min. 1kHz signal at -30dB level without "pause") 4822 397 30155

Universal test cassette Fe SBC 420 ..... 4822 397 30071
Universal test cassette CrO2 SBC 419 ..... 4822 397 30069

Handling Chip Components

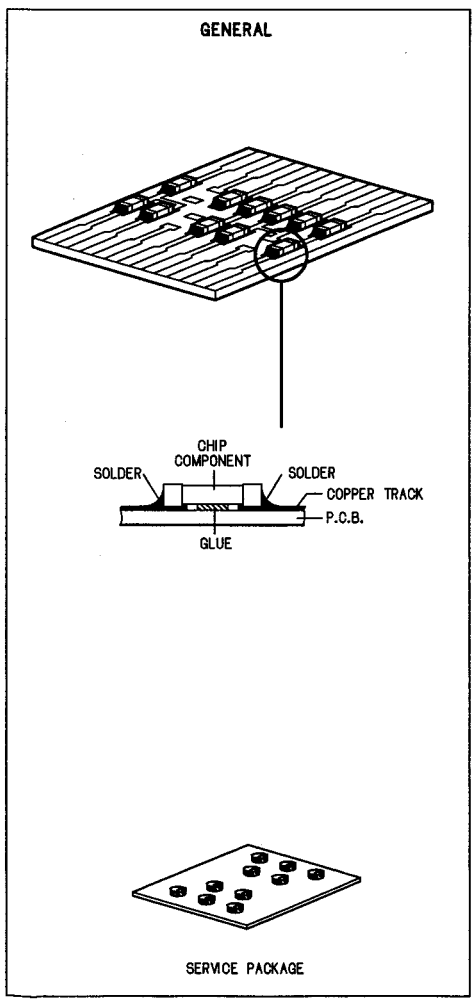

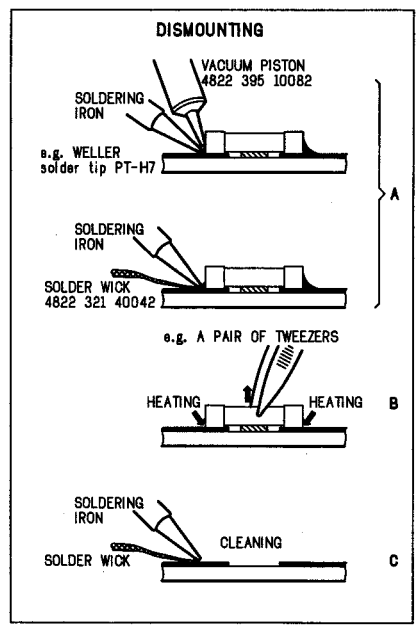

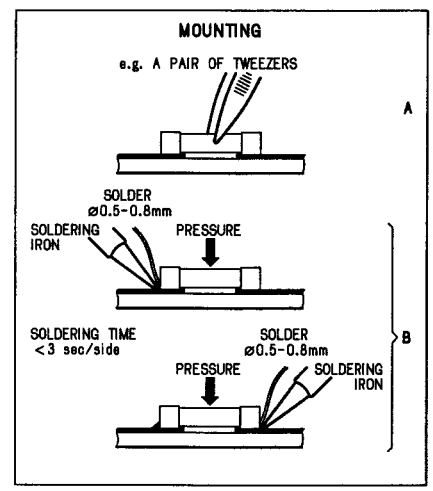

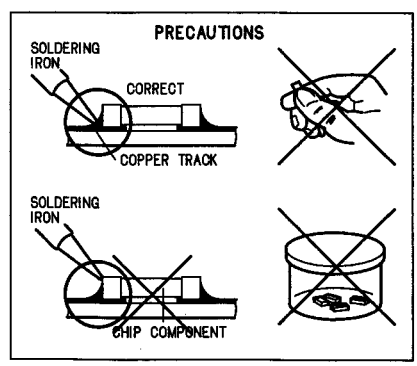

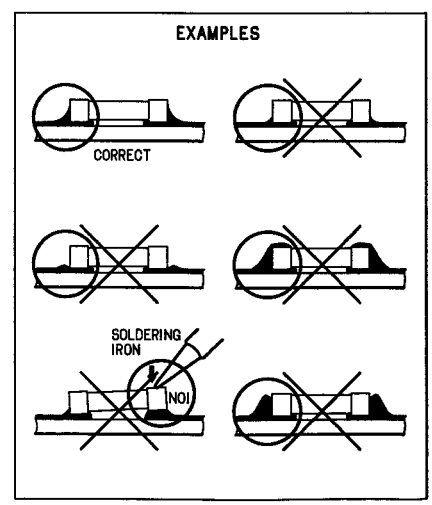

DISMANTLING INSTRUCTIONS

Dismantling of Cassette Flap

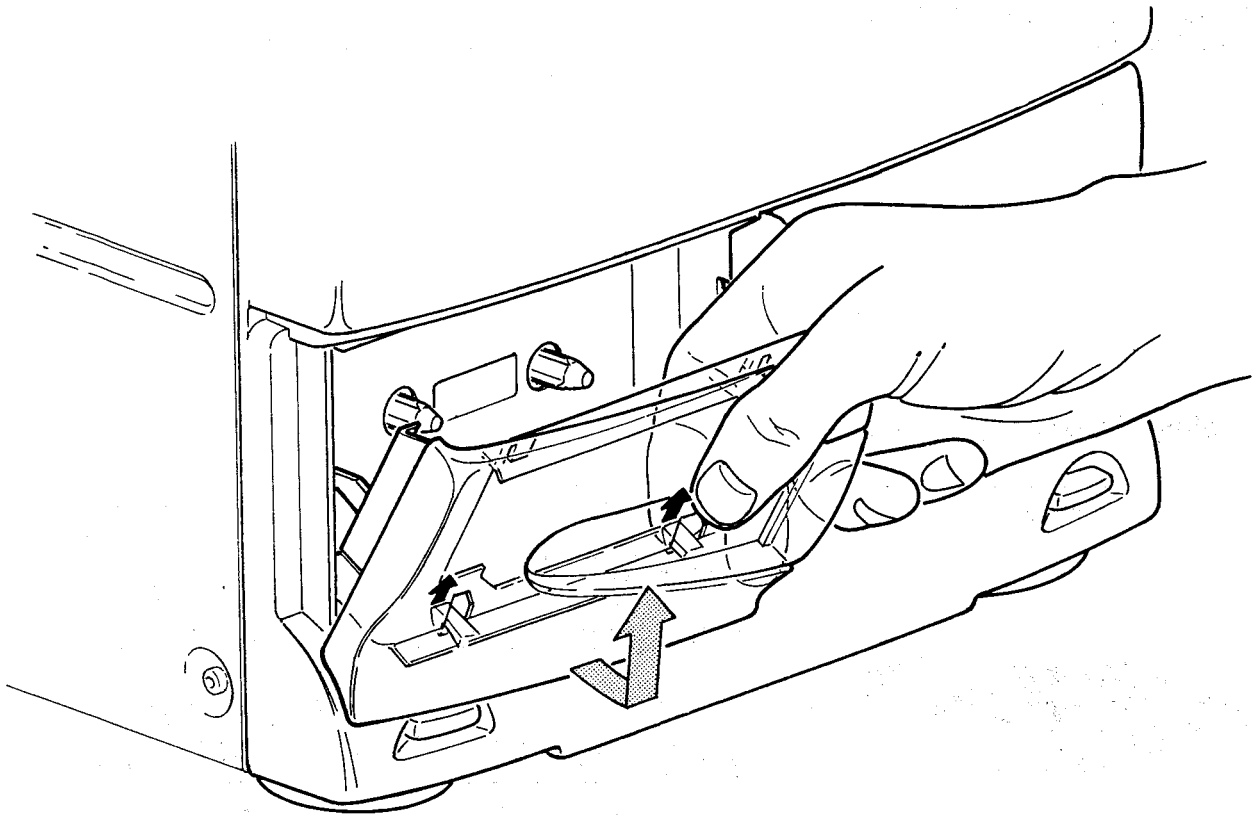

Dismantling of Front

1) Remove Cover door, CDC in the CD tray open position
2) Remove the top cover.
3) Loosen 3x screw mounting Front to bottom bracket.

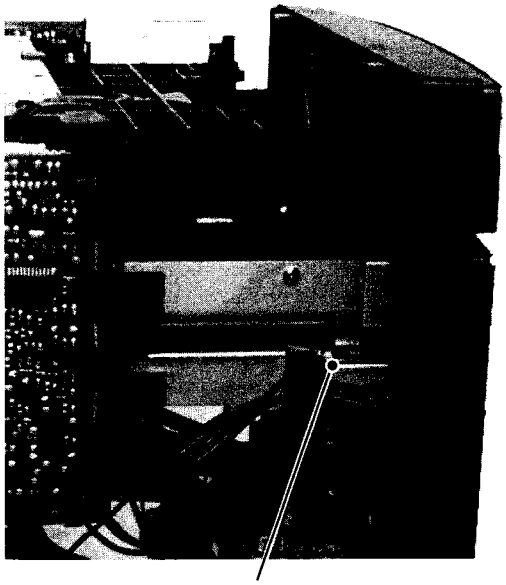

4) Loosen screw on metal bracket.

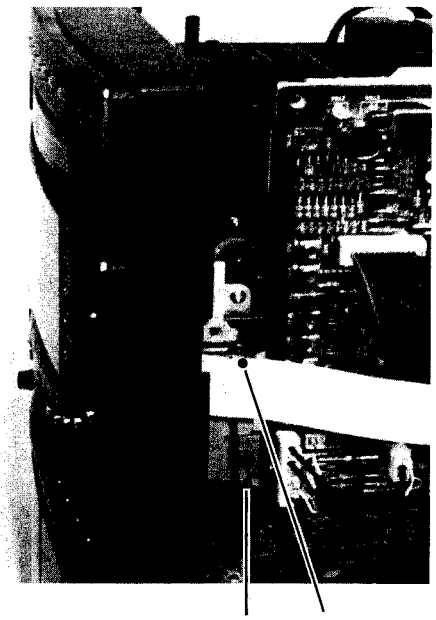

5) Loosen 2x screw on metal bracket.

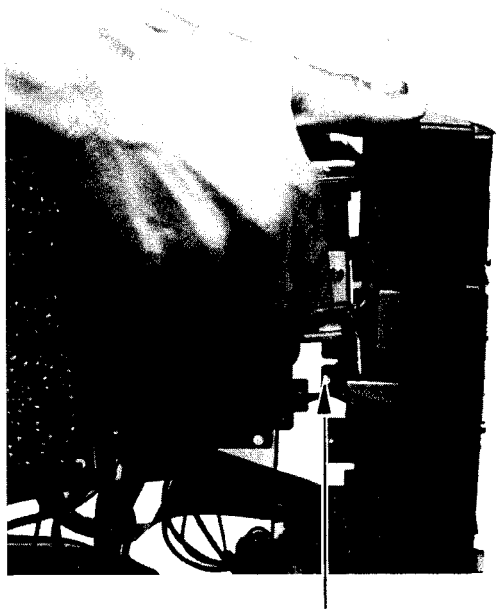

6) Lift the CD module up to release the metal bracket to the front.

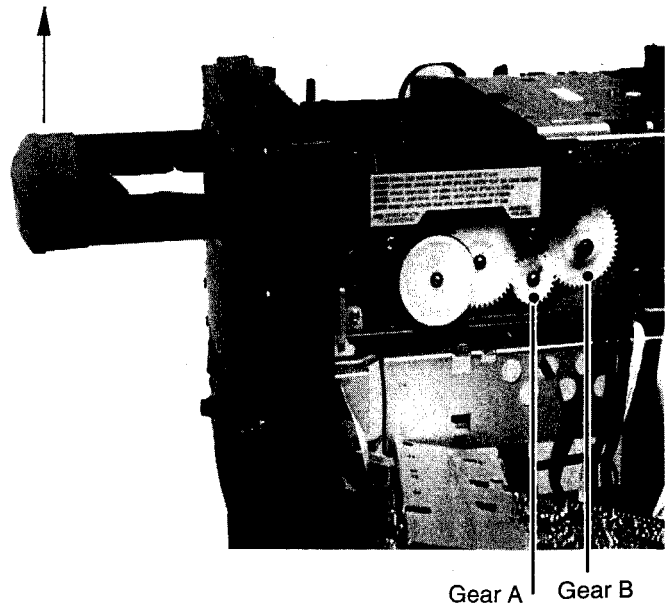

Note: If the CD tray cannot be open, do as follows:

i) Loosen 2 screw on the Combi Board. Flip the board down.
ii) Power On the set, press the CD open/close button, see that gear A is engage to gear B before disconnecting the mains supply.
iii) Rotate gear A in a clockwise direction until the CD tray comes out. Remove the Cover door, CDC

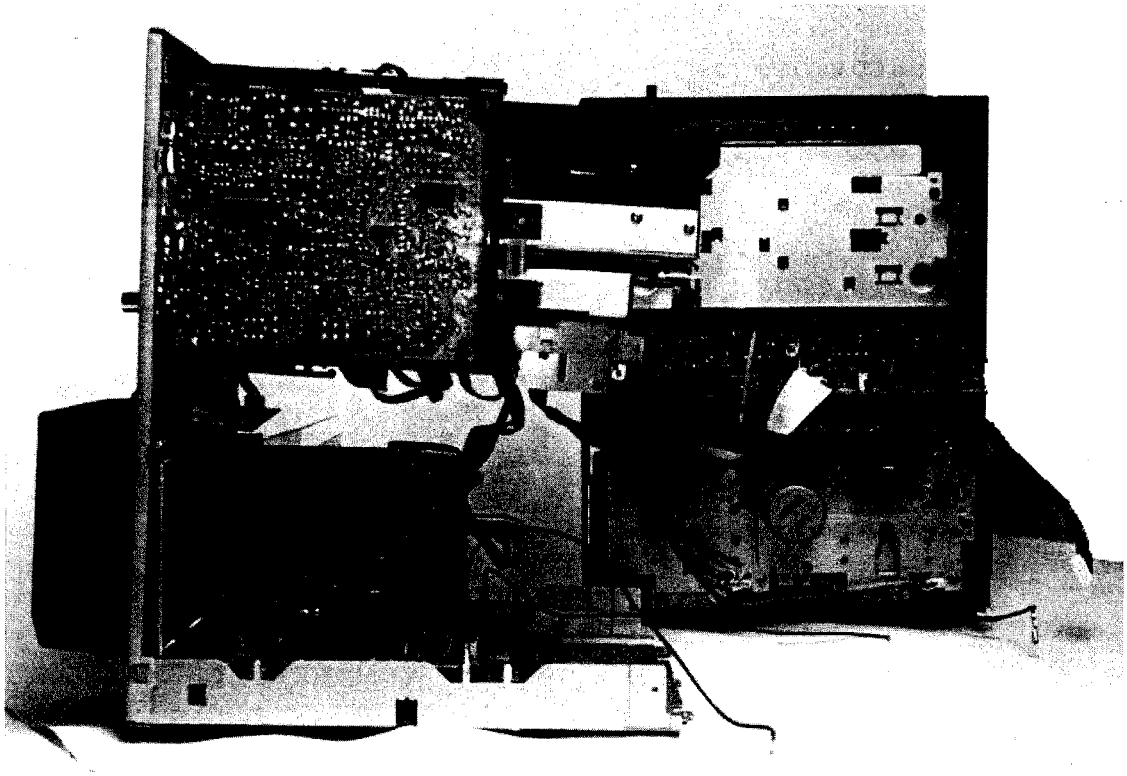

7) Repair position. Turn the front sidewards as shown above.

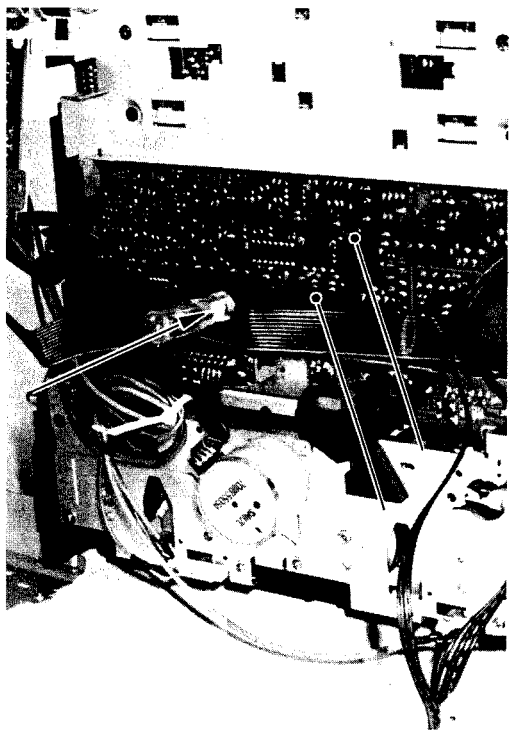

8) To remove the volume knob, insert a pointed tool into the hole indictated and push forward.

3-5

SERVICE TEST PROGRAM

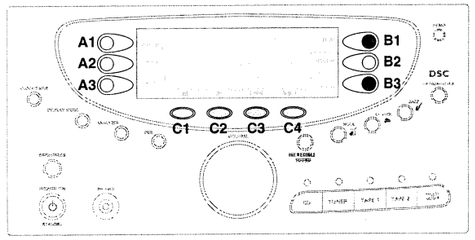

To start service test program hold B1 & B3 depressed while plugging in the mains cord

Display shows set version and number of ROM version "Sx yy zz" 1) (Main menu)

1) S stands for Service Testprogram
S1 stands for sets with CD
S2 stands for sets with CD Changer and RDS
S3 stands for sets with CD Changer without RDS

yy stands for software version number of µP on Front Board (counted from 99 downwards)

zz stands for software version number of µP on Combi Board (counted from 99 downwards)

DISPLAY TEST

DISPLAY Button pressed? (N / Y)

Display shows Fig. 1

additional all LEDs for Source and Incredible Sound are blinking

DISPLAY Button pressed? (N / Y)

Display shows Fig. 2

DISPLAY Button pressed? (N / Y)

Display shows Fig. 3

DISPLAY Button pressed? (N / Y)

Display shows Fig. 4

DISPLAY Button pressed? (Y / N)

TUNER TEST

TUNER Button pressed? (N / Y)

Display shows Version of Tuner for 2s

Service frequencies are copied to the RAM (see Table1)

Tuner is normal working except for:

PROGRAM and AUTOPROGRAM

Power off? (N / Y)

Service Mode left

QUARTZ TEST

TIMER Button pressed? (N / Y)

Display shows 32K Output at pin4 of 7401=2048Hz

TIMER Button pressed? (N / Y)

Display shows 8M Output at pin4 of 7401=1953,125Hz

TIMER Button pressed? (N / Y)

TAPE TEST

TAPE1 Button pressed? (N / Y)

Choose Test by pressing Rewind or Forward buttons

REWIND

FORWARD

STEP	Display shows	ACTION
0	TAPE1	Select Tape1 as sound source
1	COIL	Solenoids of both decks activated for 3 seconds
2	PLAY	Normal Play mode for Deck1
3	FAST	Fast Play mode for Deck1 (High speed)
4	PLAY	Normal Play mode for Deck2
5	FAST	Fast Play mode for Deck2 (High speed)
6	REC	Record mode for Deck2
7	FAST	High speed dubbing
8		Leave Tape Test

CD TEST

CD Button pressed? (N / Y)

FOR CD TEST see Chapter 3-6

CD PLAY TEST

STAND BY Button pressed? (N / Y)

CD is in normal PLAY Mode.

In case of failures error codes according table 4 (chapter 3-6) will de displayed.

The CD PLAY Test is intended to be used for continuously playing a disc in order to detect intermittend or not reproducible failures. The error code indicates where the failure can be found.

Various other Tests

PRESET	Europe "EUR"	East Europe "EAS"	USA "USA"	Oversea "OSE"	Korea "KOR"
1	108MHz	108MHz	108MHz	108MHz	180MHz
2	87,5MHz	65,81MHz	87,5MHz	87,5MHz	87,5MHz
3	1602kHz	1602kHz	1700kHz	1602kHz	1602kHz
4	531kHz	531kHz	530kHz	531kHz	531kHz
5	279kHz	279kHz	-	-	-
6	153kHz	153kHz	-	-	-
7	98MHz	98MHz	98MHz	98MHz	98MHz
8	558kHz	558kHz	560kHz	558kHz	558kHz
9	1494kHz	1494kHz	1500kHz	1494kHz	1500kHz

Table 1

TEST	Activated with	ACTION
EEPROM TEST	CLASSIC	A testpattern will be sent to the EEPROM. Size of the eeprom (1K or 4K) is displayed if the pattern is read back correctly. Otherwise ERR will be displayed.
EEPROM CLEAR	JAZZ	Load default data. Display shows NEW for 1 second. ***Caution! All presets from the customer are lost!!***
KEY TEST	OPTIMAL USER	Key numbers according table 5 are shown on the display. (see Chapter 3-6)
TEMPERATURE TEST	ROCK	Temperature of the mains transformer is displayed for 2 seconds. At 115° Celsius the µP reduces the output power → DBB off, volume down. ***Values lower than 66°C are meaningless!***
LEAVE SERVICE TESTPROGRAM	disconnect mains	

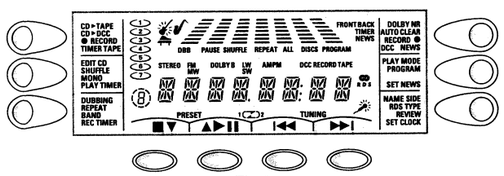

Fig.1

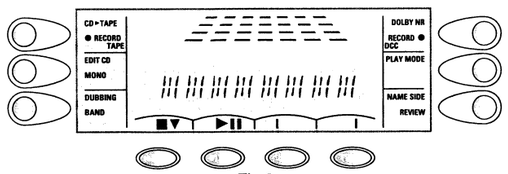

Fig.2

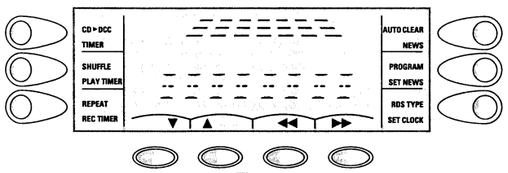

Fig.3

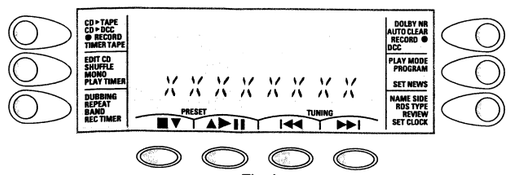

Fig.4

Error number	Error description	Error type
1002	Focus Error. Triggered when the focus could not be found within a certain time when starting up the CD or when the focus is lost for a certain time during playing the CD.	F
1007	Subcode Error. No subcode could have been read, even not after retrying 10 times to restart the PLL and jumping 10 tracks. When this happens the servo is stopped and restarted (as if the user would have pressed stop and then play immediately) to recover.	W
1008	Out of lead-in during reading TOC Triggered when during reading the TOC the lead-in (track no. 0) is left. This can be caused by a misaligned inner-switch or by a disc with a mispositioned lead-in.	W
1010	Radial error Triggered when the radial servo is not on track for a certain time during playing the CD.	F
1011	Sledge error Generated when the inner-switch did not open within a certain time when the pick up is moved from the inner position outside.	W
1012	Fatal sledge error Generated when the inner-switch did not close within a certain time when the pick up is moved inside. Inner-switch or sledge motor problems.	F
1013	Turntable motor error. Generated when the CD did not reach 75% of speed during startup within a certain time. Discmotor problem.	F
1020	PLL lock error. When the PLL did not lock after 10 retries then this warning message is generated and the servo is stopped and restarted (as if the user would have pressed stop and then play immediately) to recover.	W
1070	Carriage did not reach the play position within a certain time.	F
1071	Carriage did not reach the stocker within a certain time.	F
1072	Carriage did not pass the play position within a certain time.	F
1076	Desired disc position of the stocker could not be reached within a certain time.	W
1077	Generated when the cam is moved and either SW1 or SW2 did not open within a certain time.	F
1078	Generated when the cam is moved and either SW1 or SW2 did not close (reach the new position) within a certain time.	F
1079	Tray open position not reached within a certain time.	W
1080	Miscounting of the stocker position occured	T

Note: F = Fatal error: Set stops operation and the message remains on the display.
W = Warning: Set continues operation with the message on the display until next error.

Table 3

Key activated	Display shows	Key activated	Display shows	Key activated	Display shows
Disc 1	1	B1	13	Rock	25
Disc 2	2	B2	14	Classic	26
Disc 3	3	B3	15	Jazz	27
Disc 4	4	C1	16	Optimal User	leave Test
Disc 5	5	C2	17	Power / Stand by	30
Disc 6	6	C3	18	CD	31
Disc 7	7	C4	19	TUNER	32
CD open/close	8	Timer/Clock	20	TAPE 1	33
Demo	9	Display	21	TAPE 2	34
A1	10	Analyzer	22	VCD/LD	35
A2	11	DBB	23	Vocal Fader	36
A3	12	Pop	24	any RC5 Key	RC

Table 3

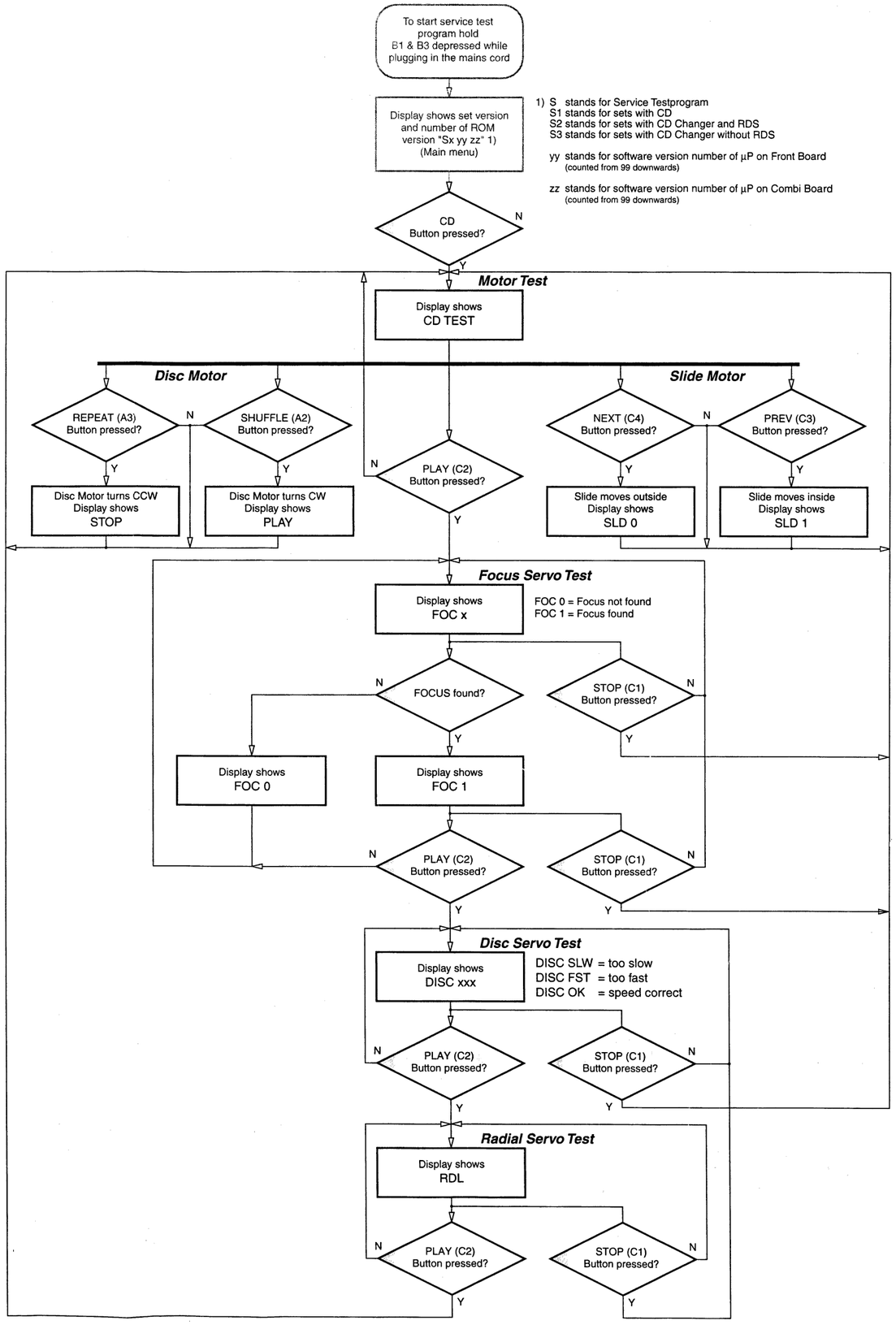

4-1

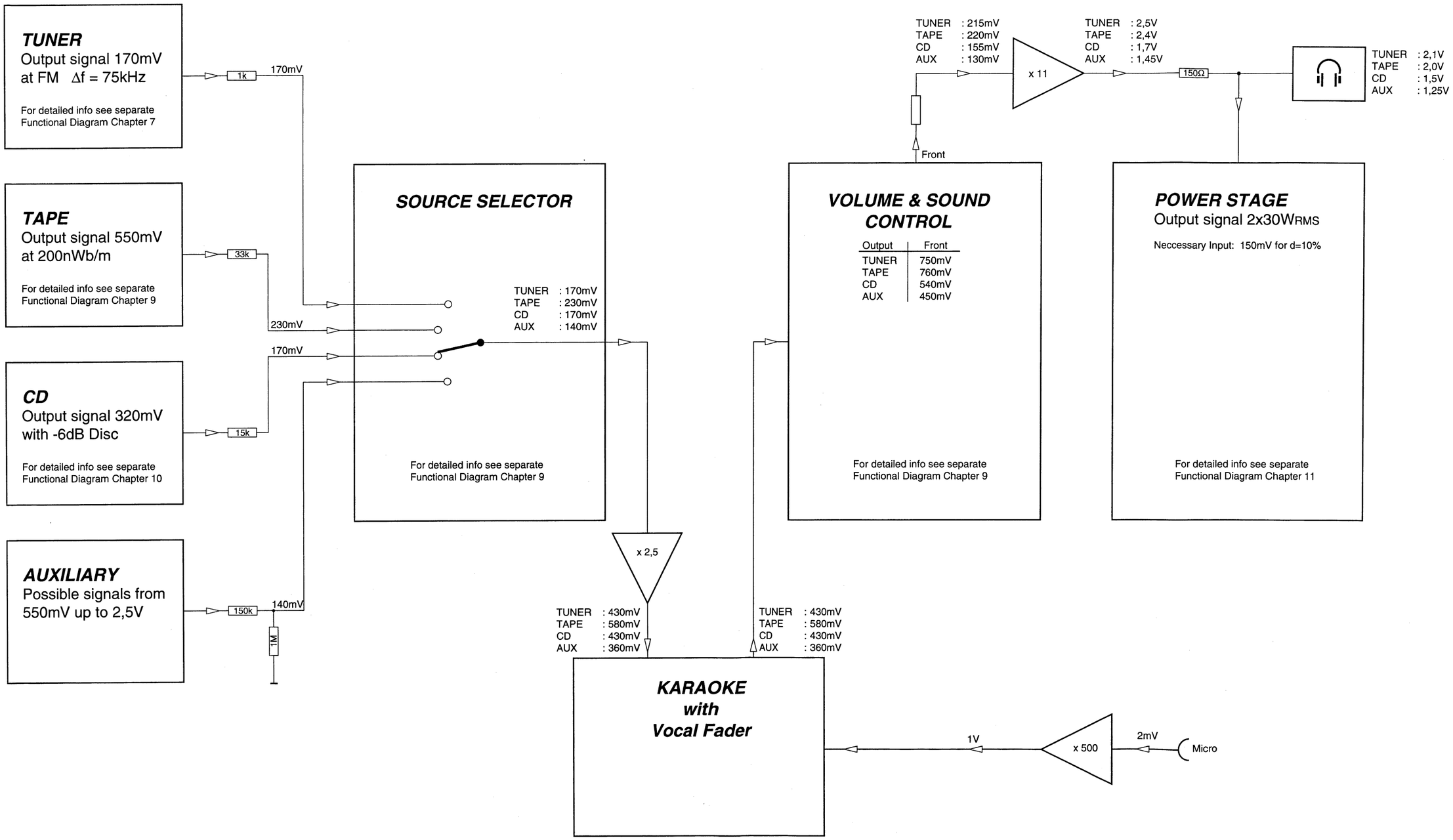
TUNER
Output signal 170mV
at FM Δf = 75kHz
For detailed info see separate
Functional Diagram Chapter 7
1k
170mV
TAPE
Output signal 550mV
at 200nWb/m
For detailed info see separate
Functional Diagram Chapter 9
33k
230mV
170mV
CD
Output signal 320mV
with -6dB Disc
For detailed info see separate
Functional Diagram Chapter 10
15k
AUXILIARY
Possible signals from
550mV up to 2,5V
150k
140mV
1M
SOURCE SELECTOR
TUNER : 170mV
TAPE : 230mV
CD : 170mV
AUX : 140mV
For detailed info see separate
Functional Diagram Chapter 9
x 2,5
TUNER : 430mV
TAPE : 580mV
CD : 430mV
AUX : 360mV
TUNER : 430mV
TAPE : 580mV
CD : 430mV
AUX : 360mV
KARAOKE
with
Vocal Fader
1V
x 500
2mV
Micro
TUNER : 215mV
TAPE : 220mV
CD : 155mV
AUX : 130mV
x 11
TUNER : 2,5V
TAPE : 2,4V
CD : 1,7V
AUX : 1,45V
150Ω
TUNER : 2,1V
TAPE : 2,0V
CD : 1,5V
AUX : 1,25V
Front
VOLUME & SOUND
CONTROL
Output | Front
TUNER | 750mV
TAPE | 760mV
CD | 540mV
AUX | 450mV
For detailed info see separate
Functional Diagram Chapter 9
POWER STAGE
Output signal 2x30WRMS
Neccessary Input: 150mV for d=10%
For detailed info see separate
Functional Diagram Chapter 11

5-1

WIRING DIAGRAM

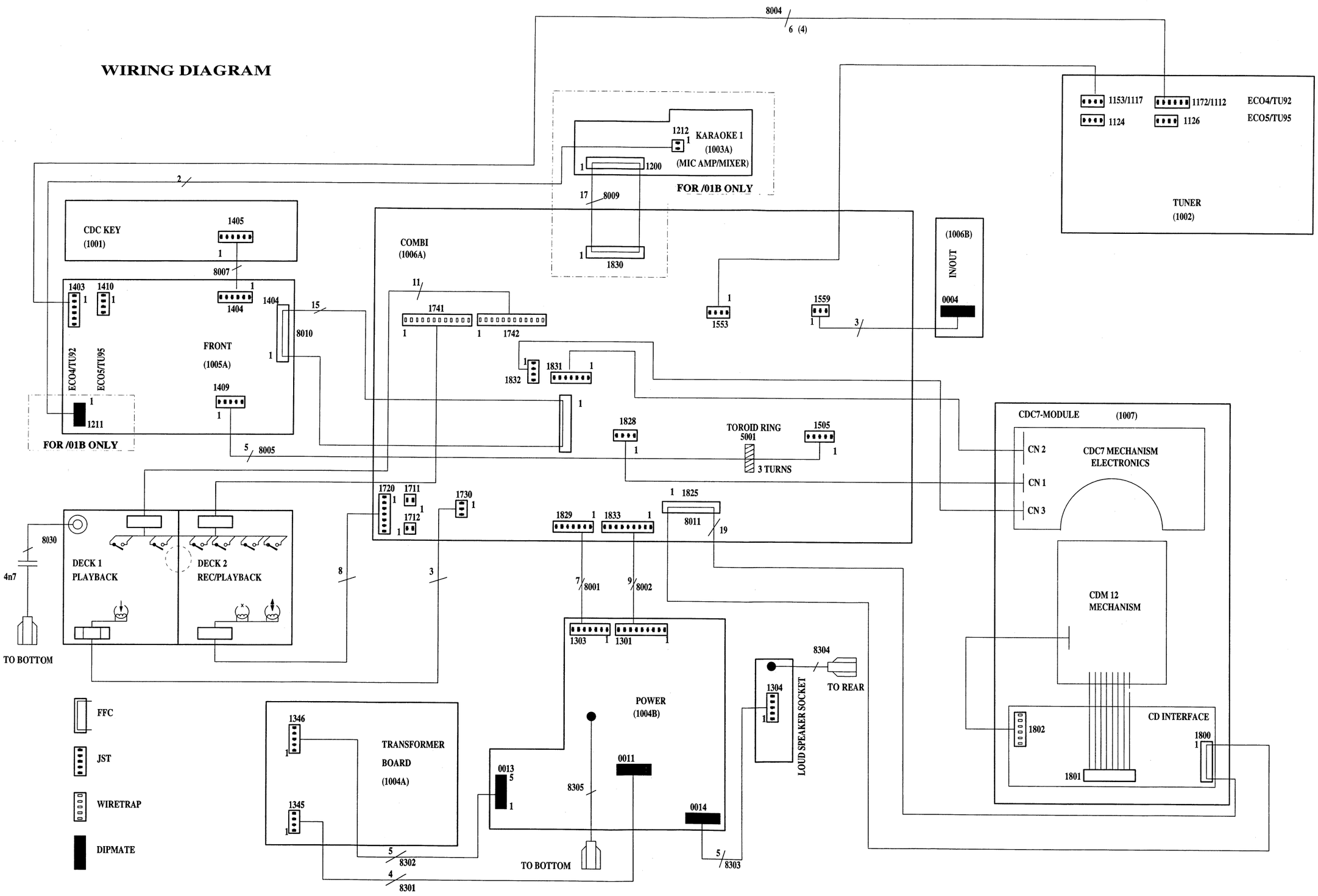

FRONT BOARD - COMPONENT LAYOUT COMPONENT SIDE

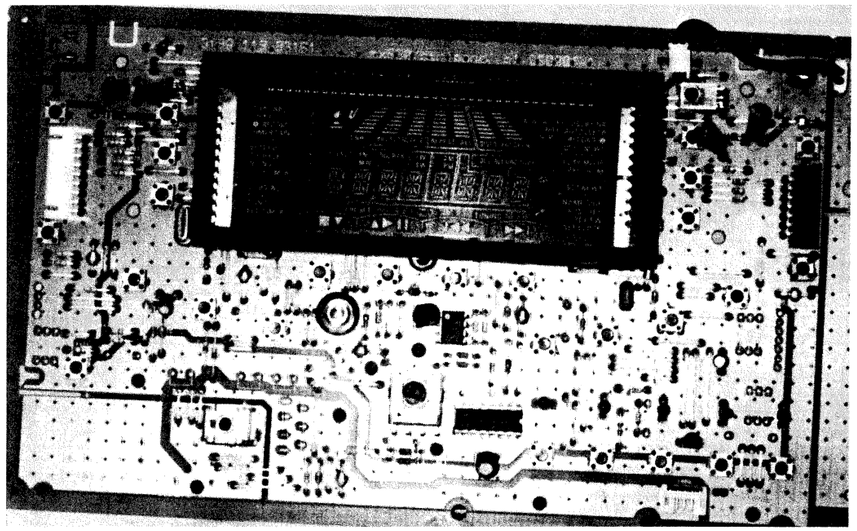

FRONT BOARD

TABLE OF CONTENTS

0004 A 7	1410 B 1	1432 D 5	1448 B 2	2412 C 6	3463 C 5	3491 A 3	4420 D 6	4447 B 4	4488 D 3	6404 C
1203 C 3	1411 B 1	1433 D 6	1450 D 2	2418 B 2	3466 C 5	3492 A 4	4424 C 1	4448 B 4	5401 C 5	6405 C
1204 C 3	1420 C 4	1434 D 5	1468 D 4	2419 C 2	3472 C 4	3493 A 3	4425 B 1	4449 B 4	5402 C 6	6406 C
1205 C 2	1421 C 6	1435 C 3	1497 A 6	2426 A 1	3475 D 4	3494 C 4	4426 B 1	4450 A 5	5403 C 2	6407 C
1211 C 1	1422 C 5	1436 D 6	1499 A 7	2430 C 4	3476 D 4	3495 C 4	4427 C 1	4451 A 5	5404 C 7	6409 B
1400 A 4	1423 A 6	1437 D 7	2401 C 3	2431 A 1	3477 C 5	3496 C 4	4428 B 1	4460 C 2	5405 D 3	6410 B
1401 B 7	1424 B 6	1438 B 7	2402 D 5	2433 D 4	3479 C 6	3497 C 4	4430 B 1	4470 C 2	5406 A 2	6411 B
1402 B 1	1425 B 6	1439 C 6	2404 A 2	2439 C 2	3484 B 6	4403 B 1	4431 A 1	4471 C 1	5410 C 6	6412 A
1403 B 1	1426 C 4	1440 A 7	2405 A 6	3206 C 1	3485 B 6	4407 C 2	4432 D 6	4472 C 2	5411 C 6	6413 A
1404 A 6	1427 C 5	1441 C 3	2406 A 3	3207 C 1	3486 B 6	4409 C 2	4436 D 3	4473 B 1	5412 B 2	6414 A
1406 C 7	1428 C 5	1442 C 2	2407 A 3	3208 C 1	3487 B 6	4415 C 6	4442 B 4	4478 D 7	5413 C 4	6415 B
1407 D 6	1429 B 1	1443 C 2	2408 A 4	3449 B 6	3488 A 2	4417 C 7	4444 B 4	4482 C 7	6401 C 5	6416 B
1408 D 3	1430 A 1	1446 A 2	2409 A 7	3450 B 6	3489 A 3	4418 C 7	4445 B 4	4484 C 4	6402 D 6	6418 A
1409 D 6	1431 C 1	1447 B 2	2410 A 7	3451 B 6	3490 A 3	4419 C 7	4446 B 4	4487 C 2	6403 C 7	6422 A

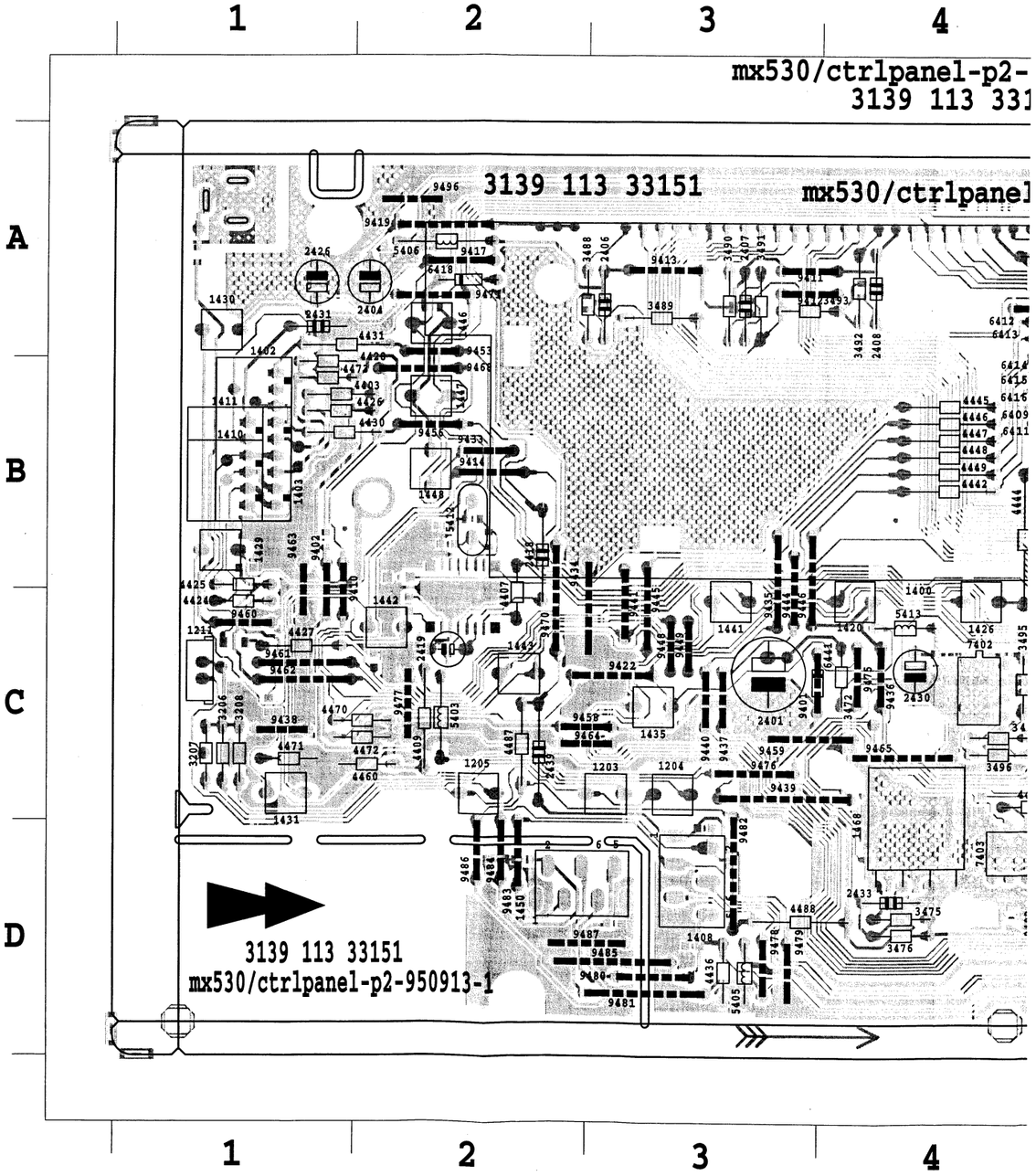

6 - 1

0004 A 7	1410 B 1	1432 D 5	1448 B 2	2412 C 6	3463 C 5	3491 A 3	4420 D 6	4447 B 4	4488 D 3	6404 C 6	6423 A 5	9407 C 5	9421 C 6	9435 B 3	9449 C 3	9464 C 3	9480 D 3	9496 A 2
1203 C 3	1411 B 1	1433 D 6	1450 D 2	2418 B 2	3466 C 5	3492 A 4	4424 C 1	4448 B 4	5401 C 5	6405 C 6	6424 A 5	9408 C 6	9422 C 3	9436 C 4	9450 C 6	9465 C 4	9481 D 3	----
1204 C 3	1420 C 4	1434 D 5	1468 D 4	2419 C 2	3472 C 4	3493 A 3	4425 B 1	4449 B 4	5402 C 6	6406 C 5	6426 A 5	9409 A 5	9423 C 6	9437 C 3	9451 C 6	9466 C 5	9482 D 3	
1205 C 2	1421 C 6	1435 C 3	1497 A 6	2426 A 1	3475 D 4	3494 C 4	4426 B 1	4450 A 5	5403 C 2	6407 C 5	6441 C 3	9410 C 1	9424 A 6	9438 C 1	9452 C 6	9467 A 6	9483 D 2	
1211 C 1	1422 C 5	1436 D 6	1499 A 7	2430 C 4	3476 D 4	3495 C 4	4427 C 1	4451 A 5	5404 C 7	6409 B 5	7402 C 4	9411 A 3	9425 B 6	9439 C 3	9453 A 2	9468 B 2	9484 D 2	
1400 A 4	1423 A 6	1437 D 7	2401 C 3	2431 A 1	3477 C 5	3496 C 4	4428 B 1	4460 C 2	5405 D 3	6410 B 6	7403 D 5	9412 A 3	9426 A 7	9440 C 3	9454 C 6	9469 C 6	9485 D 3	
1401 B 7	1424 B 6	1438 B 7	2402 D 5	2433 D 4	3479 C 6	3497 C 4	4430 B 1	4470 C 2	5406 A 2	6411 B 5	7426 D 6	9413 A 3	9427 A 6	9441 C 3	9455 D 5	9470 C 2	9486 D 2	
1402 B 1	1425 B 6	1439 C 6	2404 A 2	2439 C 2	3484 B 6	4403 B 1	4431 A 1	4471 C 1	5410 C 6	6412 A 5	7428 A 6	9414 B 2	9428 A 5	9442 D 7	9456 B 2	9471 A 2	9487 D 3	
1403 B 1	1426 C 4	1440 A 7	2405 A 6	3206 C 1	3485 B 6	4407 C 2	4432 D 6	4472 C 2	5411 C 6	6413 A 5	9401 C 3	9415 C 5	9429 B 6	9443 D 7	9457 D 5	9473 B 7	9490 A 6	
1404 A 6	1427 C 5	1441 C 3	2406 A 3	3207 C 1	3486 B 6	4409 C 2	4436 D 3	4473 B 1	5412 B 2	6414 A 5	9402 C 1	9416 B 6	9430 A 6	9444 C 3	9458 C 3	9475 C 4	9491 A 6	
1406 C 7	1428 C 5	1442 C 2	2407 A 3	3208 C 1	3487 B 6	4415 C 6	4442 B 4	4478 D 7	5413 C 4	6415 B 5	9403 C 5	9417 A 2	9431 D 7	9445 C 3	9459 C 3	9476 C 3	9492 A 6	
1407 D 6	1429 B 1	1443 C 2	2408 A 4	3449 B 6	3488 A 2	4417 C 7	4444 B 4	4482 C 7	6401 C 5	6416 B 5	9404 C 5	9418 A 7	9432 C 7	9446 B 3	9460 C 1	9477 C 2	9493 A 6	
1408 D 3	1430 A 1	1446 A 2	2409 A 7	3450 B 6	3489 A 3	4418 C 7	4445 B 4	4484 C 4	6402 D 6	6418 A 2	9405 C 6	9419 A 2	9433 B 2	9447 B 7	9461 C 1	9478 D 3	9494 A 5	
1409 D 6	1431 C 1	1447 B 2	2410 A 7	3451 B 6	3490 A 3	4419 C 7	4446 B 4	4487 C 2	6403 C 7	6422 A 5	9406 C 6	9420 C 6	9434 C 3	9448 C 3	9462 C 1	9479 D 3	9495 A 6	

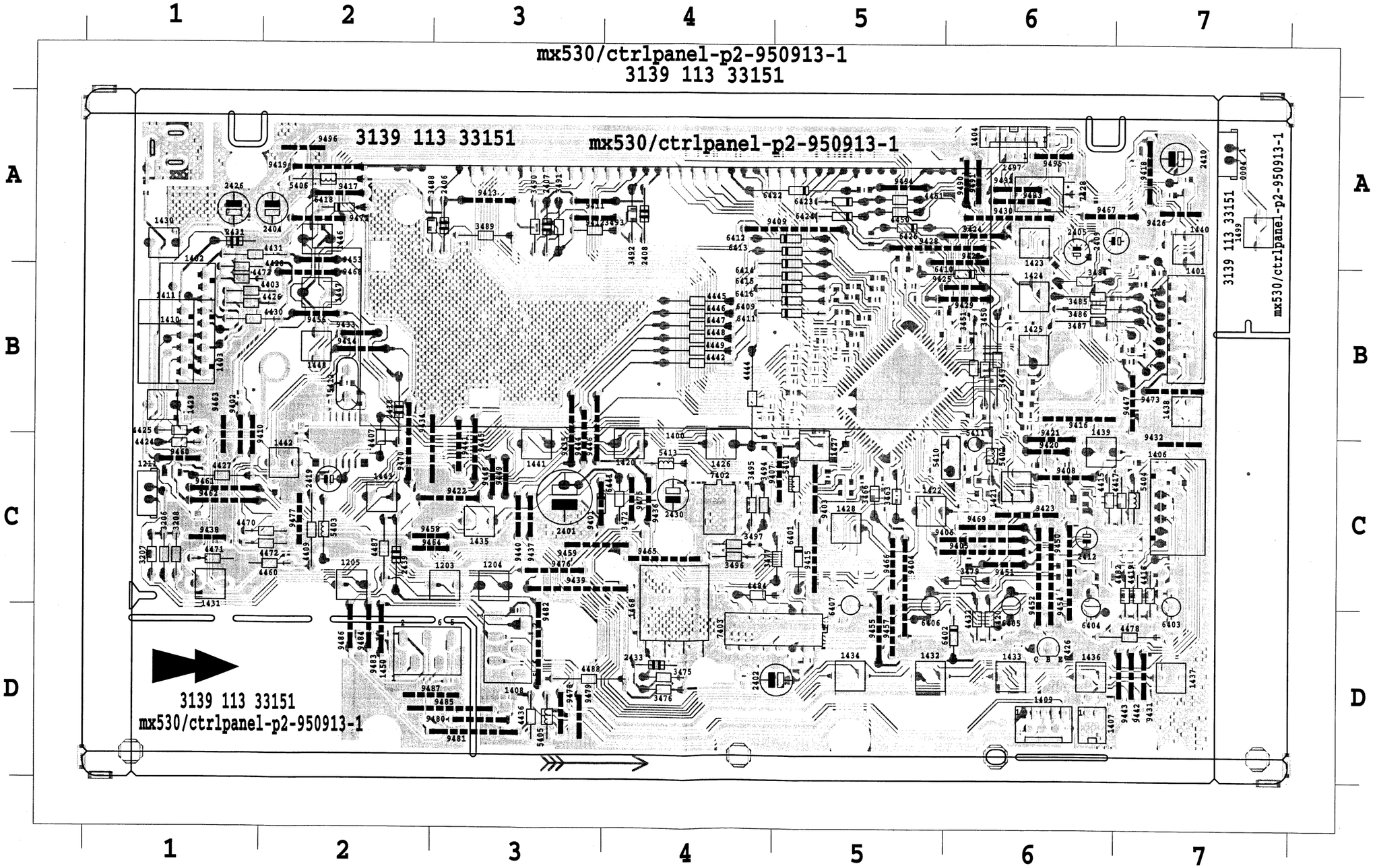

6 - 2

FRONT BOARD

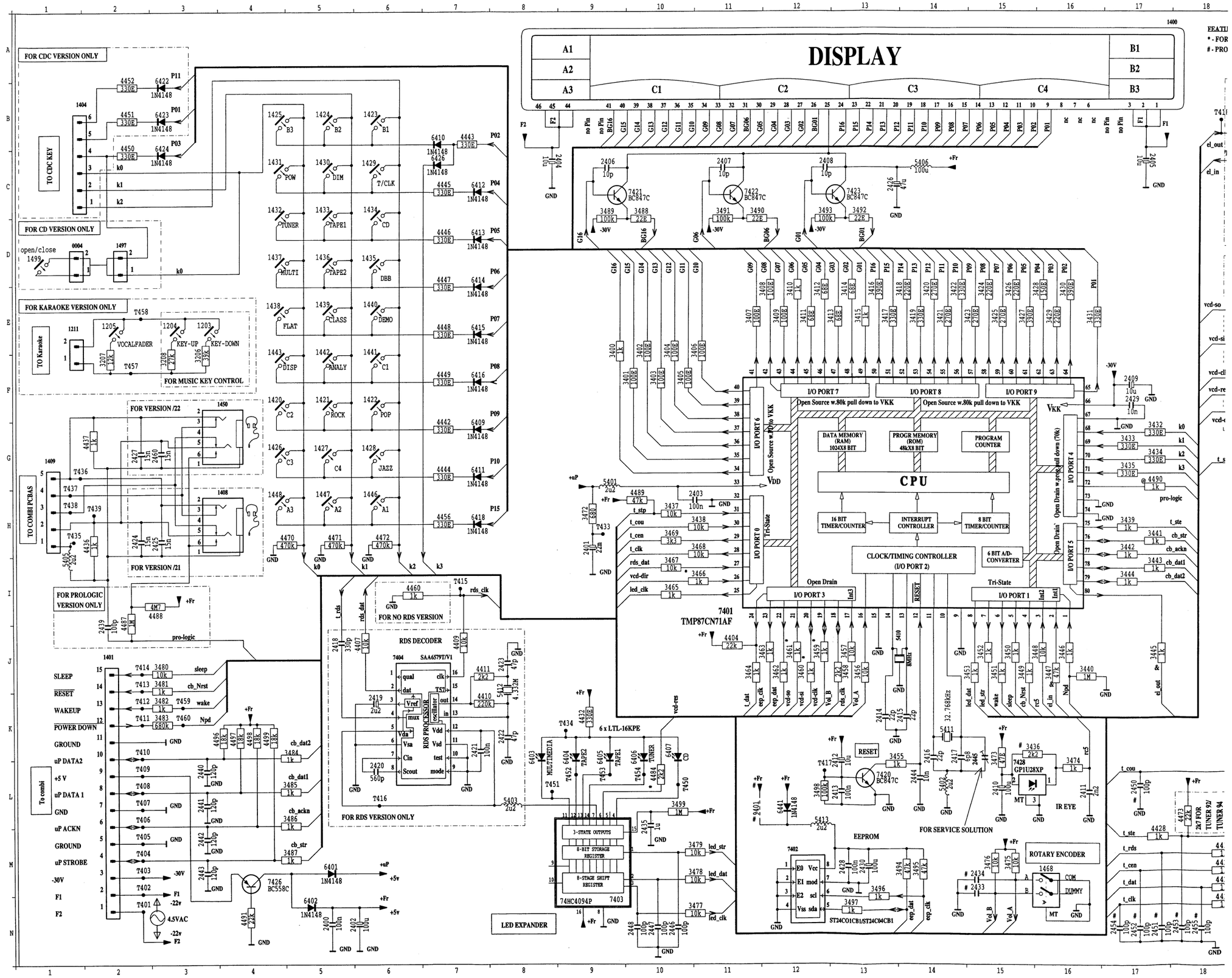

6 - 2

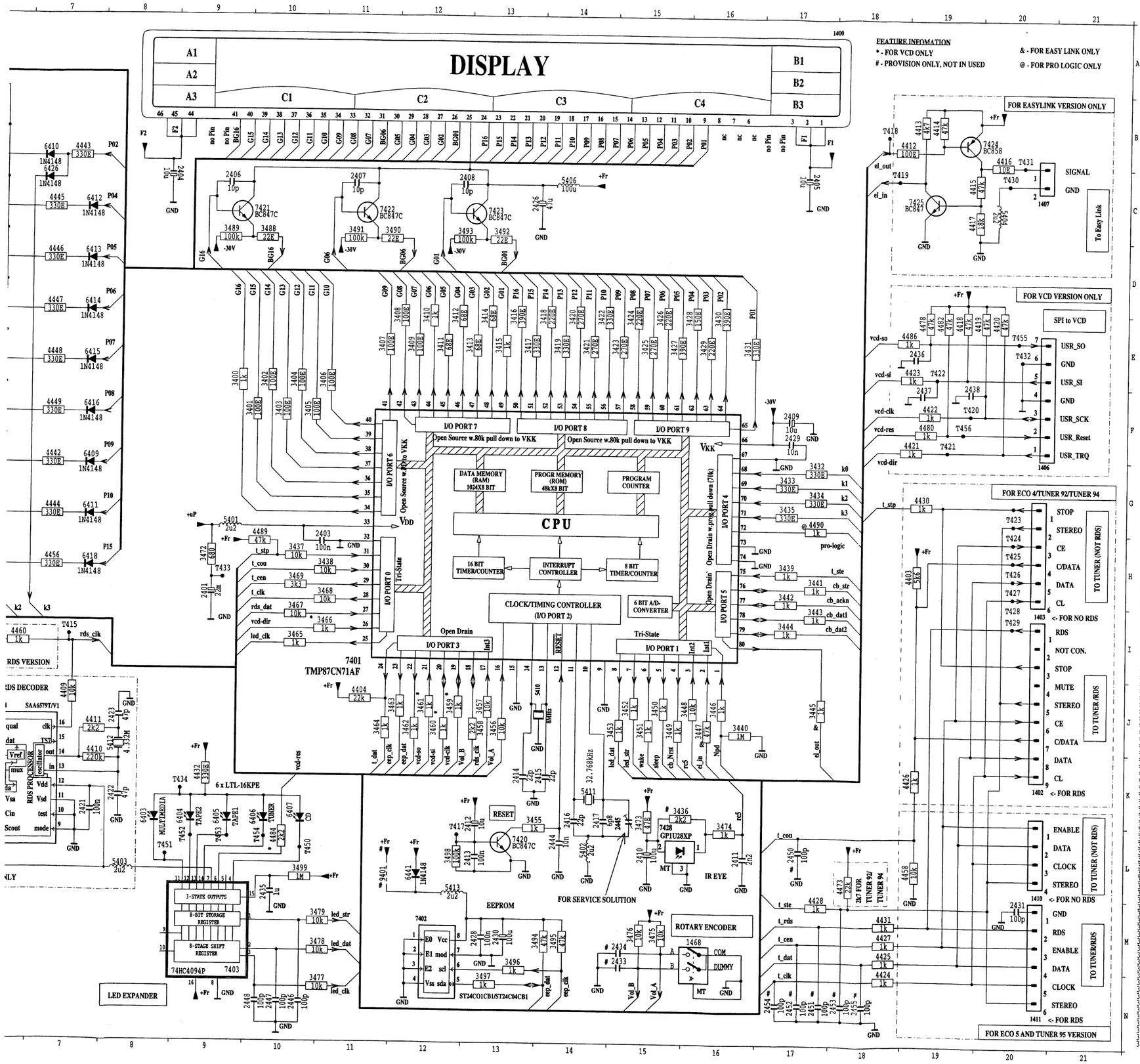

	0004 D 2		3444 I17		7421 C10
	1203 E 3		3445 J17		7422 C11
	1204 E 3		3446 J16		7423 C13
	1205 E 2		3447 J16		7424 B19
	1211 E 1		3448 J16		7425 C19
A	1400 A18		3449 J15		7426 M 4
	1401 J 2		3450 J15		7428 L15
	1402 K20		3451 J15		9401 L11
	1403 I20		3452 J15		T401 N 2
	1404 B 2		3453 J15		T402 M 2
	1406 G20		3455 K13		T403 M 2
	1407 C20		3456 J13		T404 M 2
	1408 H 4		3457 J13		T405 M 2
	1409 G 1		3458 J13		T406 L 2
	1410 L20		3459 J12		T407 L 2
	1411 N20		3460 J12		T408 L 2
B	1420 F 4		3461 J12		T409 L 2
	1421 P 5		3462 J12		T410 K 2
	1422 P 6		3463 J12		T411 K 2
	1423 B 6		3464 J11		T412 K 2
	1424 B 5		3465 I10		T413 J 2
	1425 B 4		3466 I11		T414 J 2
	1426 G 4		3467 I10		T415 I 7
	1427 G 5		3468 H11		T416 L 6
	1428 G 6		3469 H10		T417 L12
	1429 C 6		3472 H 9		T418 B18
C	1430 C 5		3473 K15		T419 C18
	1431 C 4		3474 L16		T420 P19
	1432 C 4		3475 M15		T421 P19
	1433 C 5		3476 M15		T422 E19
	1434 C 6		3477 N11		T423 G20
	1435 D 6		3478 M11		T424 G20
	1436 D 5		3479 M11		T425 H20
	1437 D 4		3480 J 3		T426 H20
	1438 B 4		3481 J 3		T427 H20
	1439 E 5		3482 K 3		T428 H20
	1440 E 6		3483 K 3		T429 I20
D	1441 F 6		3484 K 5		T430 C20
	1442 P 5		3485 L 5		T431 B20
	1443 F 4		3486 L 5		T432 E20
	1446 H 6		3487 M 5		T433 H 9
	1447 H 5		3488 C10		T434 K 9
	1448 H 4		3489 C 9		T435 H 1
	1450 F 4		3490 C11		T436 G 1
	1468 M16		3491 C11		T437 G 1
	1497 D 2		3492 C13		T438 H 1
	1499 D 1		3493 C12		T439 H 2
	2400 N 5		3494 M14		T450 L10
E	2401 H 9		3495 M14		T451 L 8
	2402 N 6		3496 M13		T452 L 9
	2403 H11		3497 N13		T453 L 9
	2404 C 8		3498 L12		T454 L10
	2405 C17		3499 L10		T455 E20
	2406 C 9		4403 H19		T456 F19
	2407 C11		4404 J11		T457 F 2
	2408 C12		4407 J 5		T458 E 2
	2409 F17		4409 J 7		T459 K 3
	2410 L15		4410 K 7		T460 K 3
	2411 L16		4411 J 7		
F	2412 L13		4412 B18		
	2413 L13		4413 B19		
	2414 K13		4414 B19		
	2415 K14		4415 C19		
	2416 K14		4416 B20		
	2417 K14		4417 C19		
	2418 J 5		4418 E19		
	2419 K 6		4419 F19		
	2420 L 6		4420 E20		
	2421 K 7		4421 F19		
G	2422 K 8		4422 F19		
	2423 J 8		4423 E19		
	2424 H 2		4424 N18		
	2425 H 3		4425 M18		
	2426 C13		4426 K19		
	2427 G 2		4427 M18		
	2428 M13		4428 M17		
	2429 F17		4430 G19		
	2430 M13		4431 M18		
	2431 M20		4432 K 9		
	2433 M15		4436 H 2		
H	2434 M15		4437 G 2		
	2435 L10		4442 G 7		
	2436 E19		4443 B 7		
	2437 F19		4444 G 7		
	2438 F19		4445 C 7		
	2439 J 2		4446 D 7		
	2440 L 3		4447 D 7		
	2441 L 3		4448 E 7		
	2442 M 3		4449 F 7		
	2443 M 3		4450 B 2		
	2444 L14		4451 B 2		
I	2445 K15		4452 A 2		
	2446 N10		4456 H 7		
	2447 N10		4458 L19		
	2448 N10		4460 I 6		
	2450 L17		4470 H 5		
	2451 N17		4471 H 5		
	2452 N17		4472 H 6		
	2453 N18		4473 L18		
	2454 N17		4478 E19		
	2455 N18		4480 F19		
	2460 G 3		4482 E19		
J	3206 F 3		4484 L10		
	3207 F 2		4486 E19		
	3208 F 3		4487 I 2		
	3400 E 5		4488 I 3		
	3401 P10		4489 H10		
	3402 E10		4490 G17		
	3403 P10		4491 N 4		
	3404 P10		4496 K 3		
	3405 P10		4497 K 4		
K	3406 E11		4498 K 4		
	3407 E11		4499 K 4		
	3408 E12		5401 G 9		
	3409 E12		5402 L14		
	3410 E12		5403 L 8		
	3411 E12		5404 C20		
	3412 E12		5405 I 1		
	3413 E13		5406 C14		
	3414 E13		5410 J14		
	3415 E13		5411 K14		
	3416 E13		5412 J 8		
	3417 E13		5413 L12		
	3418 E14		6401 M 5		
	3419 E14		6402 N 5		
	3420 E14		6403 K 8		
	3421 E14		6404 K 9		
	3422 E14		6405 K 9		
	3423 E15		6406 K10		
	3424 E15		6407 K10		
	3425 E15		6409 G 7		
	3426 E15		6410 B 7		
	3427 E15		6411 G 7		
	3428 E16		6412 C 7		
	3429 E16		6413 D 7		
	3430 E16		6414 D 7		
	3431 E16		6415 E 7		
	3432 G17		6416 F 7		
	3433 G17		6418 H 7		
	3434 G17		6422 B 3		
	3435 G17		6423 B 3		
	3436 K15		6424 C 3		
	3437 H10		6426 C 7		
	3438 H11		6441 L12		
	3439 H17		7401 I11		
	3440 J16		7402 M12		
	3441 H17		7403 N 9		
	3442 H17		7404 J 6		
	3443 I17		7420 L13		

6 - 3

FRONT BOARD - COMPONENT LAYOUT COPPERSIDE

2400 D 4	2421 B 2	2435 D 5	2446 C 5	2460 D 3	3408 B 5	3417 B 5	3426 B 5	3435 B 6	3444 B 6	3457 C 6	3468 C 5	3498 C 6	4421 C 6	4462 B 6	4489 B 1	4502 B 7	7404 C 2
2403 C 5	2422 B 2	2436 C 7	2447 D 5	3400 B 5	3409 B 5	3418 B 5	3427 B 5	3436 A 6	3445 B 6	3458 C 5	3469 C 5	3499 D 5	4422 C 7	4463 B 6	4490 A 5	4503 B 7	7420 C 6
2411 A 6	2423 B 2	2437 C 7	2448 C 4	3401 B 5	3410 B 5	3419 B 5	3428 B 5	3437 C 4	3446 B 6	3459 C 5	3473 A 7	4404 C 5	4423 C 7	4464 B 6	4491 D 6	4504 A 6	7421 A 3
2413 C 6	2424 D 3	2438 C 7	2450 B 1	3402 B 4	3411 B 5	3420 B 5	3429 B 5	3438 C 5	3447 B 6	3460 C 5	3474 A 6	4410 B 2	4437 D 3	4465 B 7	4496 B 6	4505 B 6	7422 A 3
2414 C 5	2425 D 3	2440 B 7	2451 A 2	3403 B 5	3412 B 5	3421 B 5	3430 A 5	3439 B 6	3448 C 6	3461 C 6	3478 C 5	4411 B 2	4443 A 5	4466 C 6	4497 B 7	4506 A 6	7423 A 4
2415 C 5	2427 D 2	2441 B 7	2452 C 2	3404 B 4	3413 B 5	3422 B 5	3431 B 5	3440 B 6	3452 B 6	3462 C 5	3480 A 7	4412 C 6	4452 A 5	4467 C 1	4498 B 6	4507 A 6	7424 C 7
2416 C 6	2428 C 4	2442 B 7	2453 B 1	3405 B 4	3414 B 5	3423 B 5	3432 B 5	3441 B 6	3453 C 6	3464 C 5	3481 A 7	4413 C 6	4456 A 2	4468 C 6	4499 B 7	4508 C 6	7425 C 6
2417 C 6	2429 B 5	2443 B 7	2454 C 1	3406 B 5	3415 B 5	3424 B 5	3433 B 5	3442 B 6	3455 C 6	3465 C 5	3482 A 7	4414 C 6	4458 B 1	4480 C 6	4500 B 6	4509 A 1	----
2420 C 2	2434 D 4	2444 C 6	2455 B 1	3407 B 5	3416 B 5	3425 B 5	3434 B 5	3443 B 6	3456 C 6	3467 C 5	3483 B 7	4416 C 7	4461 B 7	4486 C 7	4501 A 7	7401 B 5	

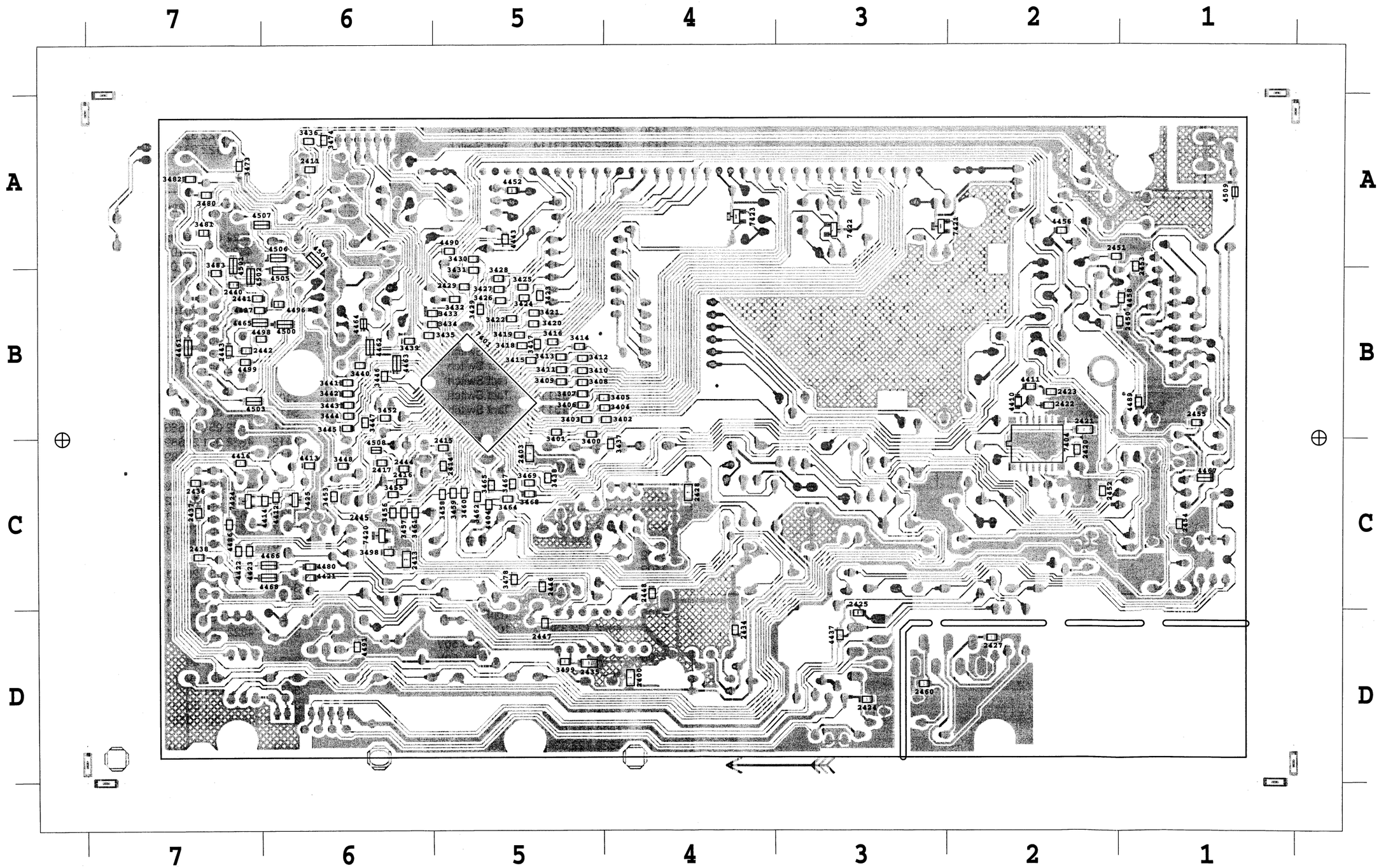

PCS 83 305

CDC-KEYS

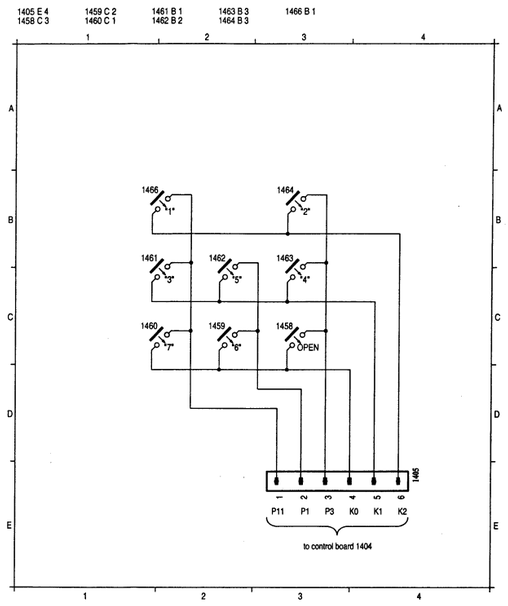

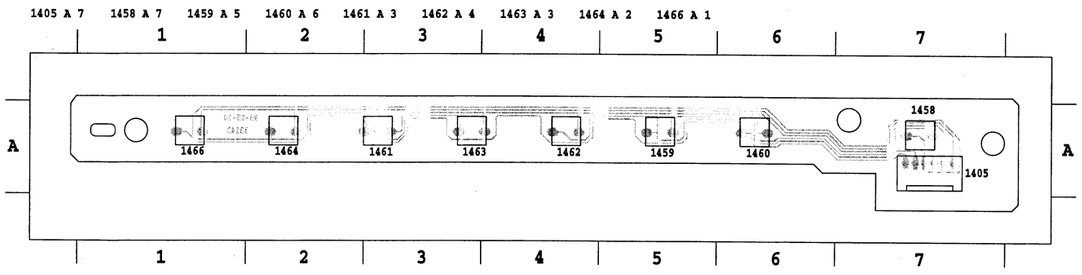

ELECTRICAL PARTS - CDC KEYS BOARD

MISCELLANEOUS

1458	4822 276 13114	Tact switch
1459	4822 276 13114	Tact switch
1460	4822 276 13114	Tact switch
1461	4822 276 13114	Tact switch
1462	4822 276 13114	Tact switch
1463	4822 276 13114	Tact switch
1464	4822 276 13114	Tact switch
1466	4822 276 13114	Tact switch

Note: Only the parts mentioned in this list are normal service parts.

ELECTRICAL PARTS - FRONT BOARD

MISCELLANEOUS

1205	4822 276 13114	Tact Switch - Karaoke version
1400	4822 130 91488	FTD Display BJ332GK
1408	4822 267 31919	Headphone Socket - /21
1420	4822 276 13114	Tact Switch
1421	4822 276 13114	Tact Switch
1422	4822 276 13114	Tact Switch
1423	4822 276 13114	Tact Switch
1424	4822 276 13114	Tact Switch
1425	4822 276 13114	Tact Switch
1426	4822 276 13114	Tact Switch
1427	4822 276 13114	Tact Switch
1428	4822 276 13114	Tact Switch
1429	4822 276 13114	Tact Switch
1430	4822 276 13114	Tact Switch
1431	4822 276 13114	Tact Switch
1432	4822 276 13114	Tact Switch
1433	4822 276 13114	Tact Switch
1434	4822 276 13114	Tact Switch
1435	4822 276 13114	Tact Switch
1436	4822 276 13114	Tact Switch
1437	4822 276 13114	Tact Switch
1438	4822 276 13114	Tact Switch
1439	4822 276 13114	Tact Switch
1440	4822 276 13114	Tact Switch
1441	4822 276 13114	Tact Switch
1442	4822 276 13114	Tact Switch
1443	4822 276 13114	Tact Switch
1446	4822 276 13114	Tact Switch
1447	4822 276 13114	Tact Switch
1448	4822 276 13114	Tact Switch
1450	4822 267 31919	Headphone Socket - /22
1468	4822 101 90254	Rotary Encoder (Sw)
7428	4822 130 10165	GP1U28XP

CAPACITORS

2400	4822 122 33496	100nF 10% 63V
2401	4822 124 80818	22mF 5.5V
2402	4822 124 42234	100µF 20% 6.3V
2403	4822 122 33496	100nF 10% 63V
2404	4822 124 41579	10µF 20% 50V
2405	4822 124 41579	10µF 20% 50V
2406	4822 122 33847	10pF 5% 50V
2407	4822 122 33847	10pF 5% 50V
2408	4822 122 33847	10pF 5% 50V
2409	4822 124 41579	10µF 20% 50V
2410	4822 124 42234	100µF 20% 6.3V
2411	4822 122 33175	2.2nF 20% 50V
2412	4822 124 22403	10µF 20% 16V
2413	4822 122 33496	100nF 10% 63V
2414	5322 122 32658	22pF 5% 50V
2415	5322 122 32658	22pF 5% 50V
2416	5322 122 32658	22pF 5% 50V
2417	5322 122 32269	6.8pF 5% 50V
2424	4822 122 33128	15nF 10% 63V - /21
2425	4822 122 33128	15nF 10% 63V - /21

CAPACITORS

2426	4822 124 23624	47µF 20% 16V
2427	4822 122 33128	15nF 10% 63V - /22
2428	4822 122 33496	100nF 10% 63V
2429	4822 122 33177	10nF 20% 50V
2430	4822 124 42234	100µF20% 6.3V
2435	4822 126 11692	1µF +80% -20% 16V
2440	5322 122 33861	120pF 10% 50V
2441	5322 122 33861	120pF 10% 50V
2442	5322 122 33861	120pF 10% 50V
2443	5322 122 33861	120pF 10% 50V
2444	4822 122 33177	10nF 20% 50V
2446	5322 122 32531	100pF 5% 50V
2447	5322 122 32531	100pF 5% 50V
2448	5322 122 32531	100pF 5% 50V
2460	4822 122 33128	15nF 10% 63V - /22

RESISTORS

3207	4822 116 52238	12k 5% 0.5W - Karaoke version
3400	4822 051 10102	1k 2% 0.25W
3401	4822 051 20101	100Ω 5% 0.1W
3402	4822 051 20101	100Ω 5% 0.1W
3403	4822 051 20101	100Ω 5% 0.1W
3404	4822 051 20101	100Ω 5% 0.1W
3405	4822 051 20101	100Ω 5% 0.1W
3406	4822 051 20101	100Ω 5% 0.1W
3407	4822 051 20101	100Ω 5% 0.1W
3408	4822 051 20101	100Ω 5% 0.1W
3409	4822 051 20101	100Ω 5% 0.1W
3410	4822 051 10102	1k 2% 0.25W
3411	4822 051 20689	68Ω 5% 0.1W
3412	4822 051 20689	68Ω 5% 0.1W
3413	4822 051 20689	68Ω 5% 0.1W
3414	4822 051 20689	68Ω 5% 0.1W
3415	4822 051 10102	1k 2% 0.25W
3416	4822 051 20391	390Ω 5% 0.1W
3417	4822 051 20331	330Ω 5% 0.1W
3418	4822 051 20221	220Ω 5% 0.1W
3419	4822 051 20331	330Ω 5% 0.1W
3420	4822 051 20271	270Ω 5% 0.1W
3421	4822 051 20271	270Ω 5% 0.1W
3422	4822 051 20331	330Ω 5% 0.1W
3423	4822 051 20271	270Ω 5% 0.1W
3424	4822 051 20221	220Ω 5% 0.1W
3425	4822 051 20271	270Ω 5% 0.1W
3426	4822 051 20221	220Ω 5% 0.1W
3427	4822 051 20391	390Ω 5% 0.1W
3428	4822 051 20151	150Ω 5% 0.1W
3429	4822 051 20221	220Ω 5% 0.1W
3430	4822 051 20391	390Ω 5% 0.1W
3431	4822 051 20331	330Ω 5% 0.1W
3432	4822 051 20331	330Ω 5% 0.1W
3433	4822 051 20331	330Ω 5% 0.1W

ELECTRICAL PARTS-FRONT BOARD

RESISTORS

3434	4822 051 20331	330Ω 5% 0.1W
3437	4822 051 20103	10k 5% 0.1W
3438	4822 051 20103	10k 5% 0.1W
3439	4822 051 10102	1k 2% 0.25W
3440	4822 051 20105	1M 5% 0.1W
3441	4822 051 10102	1k 2% 0.25W
3442	4822 051 10102	1k 2% 0.25W
3443	4822 051 10102	1k 2% 0.25W
3444	4822 051 10102	1k 2% 0.25W
3446	4822 051 10102	1k 2% 0.25W
3448	4822 051 20103	10k 5% 0.1W
3449	4822 050 11002	1k 1% 0.4W
3450	4822 050 11002	1k 1% 0.4W
3451	4822 050 11002	1k 1% 0.4W
3452	4822 051 10102	1k 2% 0.25W
3453	4822 051 10102	1k 2% 0.25W
3455	4822 051 10102	1k 2% 0.25W
3456	4822 051 20103	10k 5% 0.1W
3457	4822 051 20103	10k 5% 0.1W
3458	4822 051 20222	2k2 5% 0.1W
3462	4822 051 10102	1k 2% 0.25W
3463	4822 050 11002	1k 1% 0.4W
3464	4822 051 10102	1k 2% 0.25W
3465	4822 051 10102	1k 2% 0.25W
3467	4822 051 20103	10k 5% 0.1W
3468	4822 051 20103	10k 5% 0.1W
3469	4822 051 20332	3k3 5% 0.1W
3472	4822 116 52228	680Ω 5% 0.5W
3473	4822 051 20479	47Ω 5% 0.1W
3474	4822 051 10102	1k 2% 0.25W
3475	4822 116 83864	10k 5% 0.5W
3476	4822 116 83864	10k 5% 0.5W
3477	4822 116 83864	10k 5% 0.5W
3478	4822 051 20103	10k 5% 0.1W
3479	4822 116 83864	10k 5% 0.5W
3480	4822 051 20103	10k 5% 0.1W
3481	4822 051 10102	1k 2% 0.25W
3482	4822 051 10102	1k 2% 0.25W
3483	4822 051 20684	680k 5% 0.1W
3484	4822 050 11002	1k 1% 0.4W
3485	4822 050 11002	1k 1% 0.4W
3486	4822 050 11002	1k 1% 0.4W
3487	4822 050 11002	1k 1% 0.4W
3488	4822 116 52186	22Ω 5% 0.5W
3489	4822 116 52234	100k 5% 0.5W
3490	4822 116 52186	22Ω 5% 0.5W
3491	4822 116 52234	100k 5% 0.5W
3492	4822 116 52186	22Ω 5% 0.5W
3493	4822 116 52234	100k 5% 0.5W
3494	4822 116 52284	47k 5% 0.5W
3495	4822 116 52284	47k 5% 0.5W
3496	4822 050 11002	1k 1% 0.4W
3497	4822 050 11002	1k 1% 0.4W
3498	4822 051 20104	100k 5% 0.1W
3499	4822 051 20105	1M 5% 0.1W

RESISTORS

4403	4822 116 52289	5k6 5% 0.5W
4404	4822 051 20223	22k 5% 0.1W
4424	4822 050 11002	1k 1% 0.4W
4425	4822 050 11002	1k 1% 0.4W
4426	4822 050 11002	1k 1% 0.4W
4427	4822 050 11002	1k 1% 0.4W
4428	4822 050 11002	1k 1% 0.4W
4430	4822 050 11002	1k 1% 0.4W
4431	4822 050 11002	1k 1% 0.4W
4432	4822 116 52219	330Ω 5% 0.5W
4436	4822 050 11002	1k 1% 0.4W
4437	4822 051 10102	1k 2% 0.25W
4442	4822 116 52219	330Ω 5% 0.5W
4443	4822 051 20331	330Ω 5% 0.1W
4444	4822 116 52219	330Ω 5% 0.5W
4445	4822 116 52219	330Ω 5% 0.5W
4446	4822 116 52219	330Ω 5% 0.5W
4447	4822 116 52219	330Ω 5% 0.5W
4448	4822 116 52219	330Ω 5% 0.5W
4449	4822 116 52219	330Ω 5% 0.5W
4450	4822 116 52219	330Ω 5% 0.5W
4451	4822 116 52219	330Ω 5% 0.5W
4452	4822 051 20331	330Ω 5% 0.1W
4456	4822 051 20331	330Ω 5% 0.1W
4460	4822 050 11002	1k 1% 0.4W
4461	4822 051 10008	0Ω 5% 0.25W
4462	4822 051 10008	0Ω 5% 0.25W
4463	4822 051 10008	0Ω 5% 0.25W
4464	4822 051 20008	0Ω Jumper 0805
4465	4822 051 10008	0Ω 5% 0.25W
4466	4822 051 10008	0Ω 5% 0.25W
4468	4822 051 10008	0Ω 5% 0.25W
4470	4822 116 52285	470k 5% 0.5W
4471	4822 116 52285	470k 5% 0.5W
4472	4822 116 52285	470k 5% 0.5W
4473	4822 116 52263	2k7 5% 0.5W - For Tuner92/94 Board
4473	4822 116 52257	22k 5% 0.5W - For ECO4 Board
4489	4822 051 20473	47k 5% 0.1W
4491	4822 051 20223	22k 5% 0.1W
4496	4822 051 20183	18k 5% 0.1W
4497	4822 051 20183	18k 5% 0.1W
4498	4822 051 20183	18k 5% 0.1W
4499	4822 051 20183	18k 5% 0.1W
4500	4822 051 10008	0Ω 5% 0.25W
4501	4822 051 10008	0Ω 5% 0.25W
4502	4822 051 10008	0Ω 5% 0.25W
4503	4822 051 10008	0Ω 5% 0.25W
4504	4822 051 10008	0Ω 5% 0.25W
4505	4822 051 10008	0Ω 5% 0.25W
4506	4822 051 10008	0Ω 5% 0.25W
4507	4822 051 10008	0Ω 5% 0.25W
4508	4822 051 20008	0Ω Jumper 0805
4509	4822 051 20008	0Ω Jumper 0805

ELECTRICAL PARTS-FRONT BOARD

COILS & FILTERS

5401	4822 157 62552	Coil 2.2µH 20%
5402	4822 157 62552	Coil 2.2µH 20%
5405	4822 157 62552	Coil 2.2µH 20%
5406	4822 157 52333	Coil 100µH 10%
5410	5322 242 73697	Ceram Resonator 8MHz
5411	4822 242 70938	X'tal Resonator 32.768kHz
5413	4822 157 62552	Coil 2.2µH 20%

DIODES

6401	4822 130 30621	1N4148
6402	4822 130 30621	1N4148
6403	4822 130 82978	LTL-16KPE
6404	4822 130 82978	LTL-16KPE
6405	4822 130 82978	LTL-16KPE
6406	4822 130 82978	LTL-16KPE
6407	4822 130 82978	LTL-16KPE
6409	4822 130 30621	1N4148
6410	4822 130 30621	1N4148
6411	4822 130 30621	1N4148
6412	4822 130 30621	1N4148
6413	4822 130 30621	1N4148
6414	4822 130 30621	1N4148
6415	4822 130 30621	1N4148
6416	4822 130 30621	1N4148
6418	4822 130 30621	1N4148
6422	4822 130 30621	1N4148
6423	4822 130 30621	1N4148
6424	4822 130 30621	1N4148
6441	4822 130 30621	1N4148

TRANSISTORS

7420	5322 130 42755	BC847C
7421	5322 130 42755	BC847C
7422	5322 130 42755	BC847C
7423	5322 130 42755	BC847C
7426	5322 130 60068	BC558C

INTEGRATED CIRCUITS

7401	4822 209 90998	TMP87CS71F - 65RV83041
7402	4822 209 31508	ST24C01CB1
7403	5322 209 11532	74HC4094P

Note: Only the parts mentioned in this list are normal service parts.

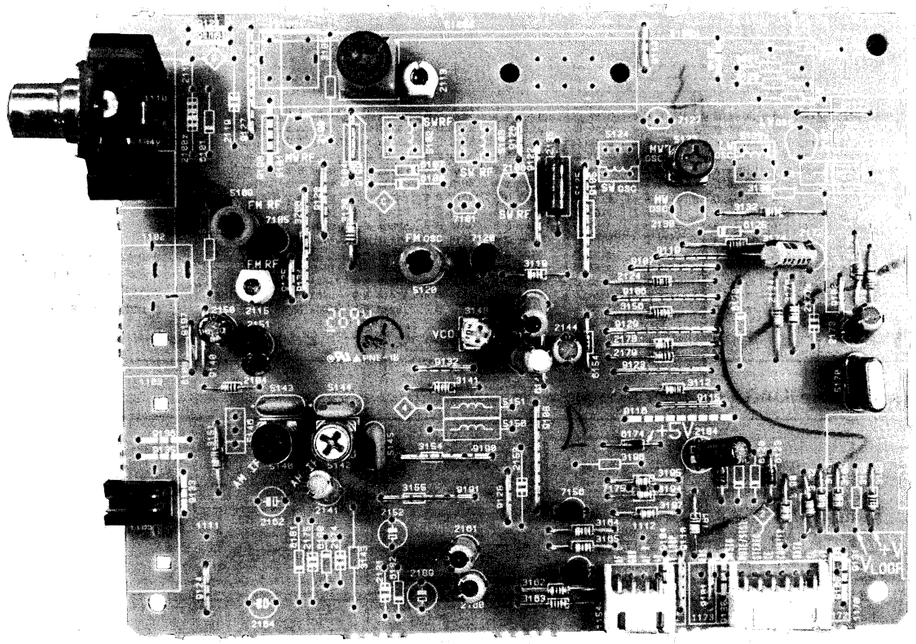

TUNER BOARD ECO4VA

(for /01B Version Only)

TABLE OF CONTENTS

BLOCKDIAGRAM

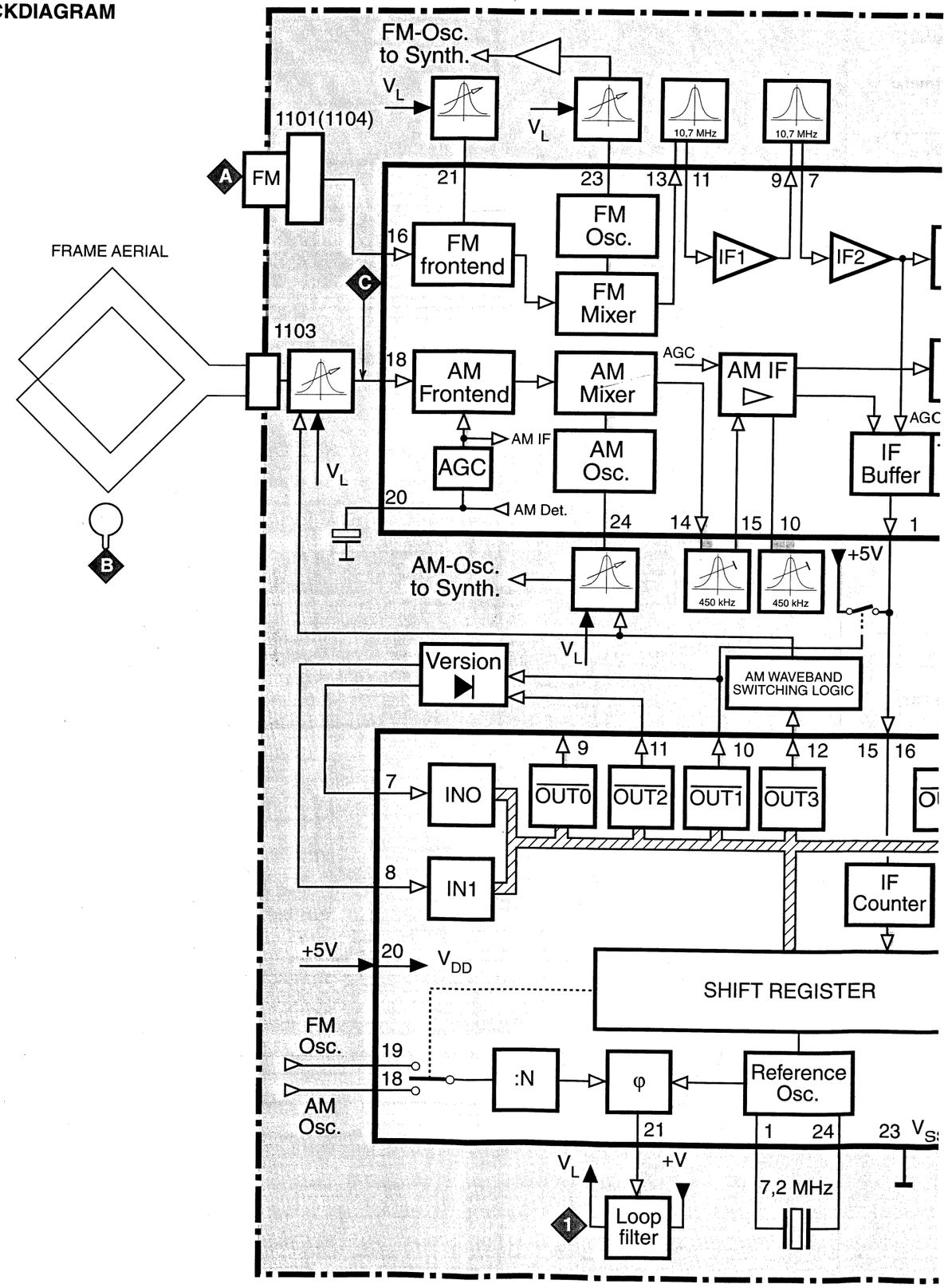

7A-1

BLOCKDIAGRAM

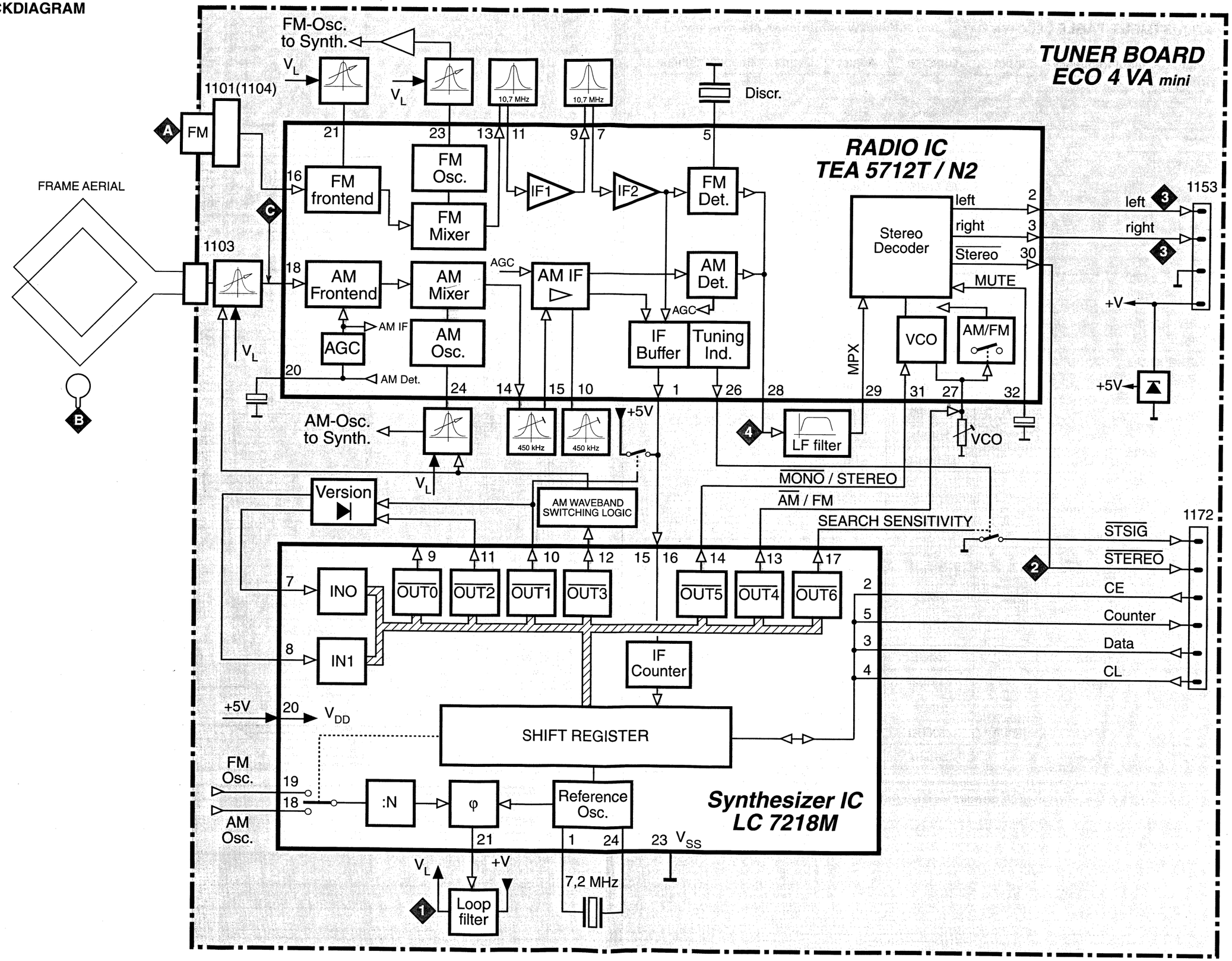

ersion Only)

TUNER ADJUSTMENT TABLE (ECO4VA FM/MW- and FM/MW/LW - versions with AM-frame aerial)

Waverange	Input frequency	Input	Tuned to	Adjust	Output	Scope/Voltmeter
VARICAP ALIGNMENT						
FM			108MHz	5120		8V ±0.2V
87.5 - 108MHz			87.5MHz	check		4.1V ±0.5V
FM East Europe			108MHz	5120		8V ±0.2V
65.81 - 108MHz			65.81MHz	check		0.8V ±0.4V
MW 2-band version			1710kHz	5123	1	9V ±0.1V
530 - 1710kHz			530kHz	check		1V ±0.4V
LW			279kHz	5122		8V ±0.2V
153 - 279kHz			153kHz	check		1V ±0.4V
MW 3-band version			1611kHz	5123		8V ±0.1V
522 - 1611kHz			522kHz	check		1V ±0.4V
FM RF						
FM	108MHz		108MHz	2115		
87.5 - 108MHz	87.5MHz	A	87.5MHz	5109	3	MAX
FM East Europe	108MHz	mod=1kHz	108MHz	2115		
65.81 - 108MHz	65.81MHz	Δf=22.5kHz	65.81MHz	5109		
VCO						
FM	98MHz, 1mV continuous wave	A	98MHz	3148	2	152kHz ±1kHz
AM IF						
MW	540kHz Δf=10kHz as low as possible	100nF C 50R	540kHz	5142 5140	4	symmetrical and max. height
AM RF [1]						
LW	198kHz		198kHz	5108		MAX
MW 3-band version	1494kHz	B	1494kHz	2113	4	
522 - 1611kHz	549kHz	mod=1kHz	549kHz	5107		MAX
MW 2-band version	1500kHz	30% AM	1500kHz	2113		
530 - 1710kHz	550kHz		550kHz	5107		

ECO4VA mini.ai 290595

Use service test program. By selecting the TUNER TEST test frequencies will be stored as preset frequencies automatically.

[1] For AM RF adjustments the original frame antenna 4822 158 60622 has to be used !

↕ Repeat

1101 A 1	1173 E 5	2142 C 4	2175 D 2	3127 A 6	3173 B 6	5101 A 2	5142 D 2	6121 D 5	7156 D 4	9110 E 5	9126 A 4
1102 B 1	2100 A 1	2143 C 4	2177 C 6	3130 B 6	3174 B 5	5102 A 3	5143 C 2	6122 D 5	7157 E 4	9111 E 5	9127 A 2
1103 D 1	2104 C 2	2144 C 4	2178 C 5	3132 B 6	3177 A 6	5103 A 3	5144 C 2	6123 D 6	7175 D 5	9112 E 4	9128 D 4
1104 B 1	2106 B 4	2150 C 2	2179 C 5	3141 C 3	3181 D 5	5104 A 3	5145 D 3	6125 B 5	8101 B 1	9113 A 5	9129 C 5
1105 D 1	2113 A 3	2151 C 2	2184 D 5	3143 D 3	3189 D 6	5105 A 4	5146 D 2	6140 C 4	8102 A 1	9115 C 5	9130 E 5
1110 A 1	2115 B 2	2152 D 3	2189 E 3	3148 C 3	3190 D 6	5106 A 4	5150 D 3	6154 C 4	9100 E 6	9116 C 5	9131 E 6
1111 D 2	2118 A 1	2153 D 4	2190 A 2	3151 D 2	3191 D 6	5107 A 3	5151 C 3	6170 C 5	9101 E 5	9117 A 6	9132 C 3
1112 D 5	2119 A 2	2160 E 3	2191 A 6	3154 D 3	3192 D 6	5108 A 2	5170 C 6	6174 D 5	9102 A 5	9118 A 2	9133 D 1
1152 E 5	2124 B 5	2161 D 3	3105 A 2	3155 D 3	3193 D 6	5109 B 2	5180 E 3	6180 D 2	9103 C 6	9119 B 5	9134 B 2
1153 E 5	2129 B 6	2162 D 2	3112 C 5	3156 C 5	3194 D 5	5120 B 3	5181 E 3	6181 D 2	9104 E 5	9120 B 2	9135 D 1
1154 E 4	2130 B 5	2164 E 2	3115 B 2	3162 E 4	3195 D 5	5122 B 6	6100 C 1	6182 E 3	9105 B 4	9121 A 2	9136 D 1
1155 E 2	2131 E 3	2170 B 6	3119 B 4	3163 E 4	3196 D 4	5123 B 5	6101 A 2	7101 B 3	9106 C 5	9122 B 4	9140 C 2
1156 E 1	2134 C 6	2172 B 6	3120 B 3	3164 D 4	3197 D 5	5124 B 5	6106 B 3	7105 B 2	9107 B 5	9123 C 5	9190 D 3
1170 E 6	2135 B 4	2173 C 6	3124 A 6	3165 D 4	3198 D 6	5125 B 4	6107 B 3	7120 B 4	9108 D 4	9124 E 1	9191 D 3
1172 E 6	2141 D 2	2174 D 2	3126 A 6	3170 C 6	3206 B 2	5140 D 2	6120 D 6	7127 A 5	9109 E 5	9125 B 2	9197 C 1

9198 A 2	2101 A 2	2122 B	
9199 A 3	2102 A 4	2123 B	
	2103 C 2	2125x A	
	2105 B 3	2126x A	
	2107 B 2	2128 A	
	2108 A 3	2132 B	
	2109 B 4	2133x A	
	2110o A 4	2136 B	
	2111 B 3	2137 B	
	2112 B 4	2138o B	
	2114x A 3	2139x A	
	2116 B 2	2140 A	
	2117 A 4	2145x A	
	2120 B 3	2146x A	
	2121 B 2	2147 D	

o for AM-version only
x for LW-version only
y for USA version only
z not for all versions

ECO4 VA TUNER BOARD / component side view

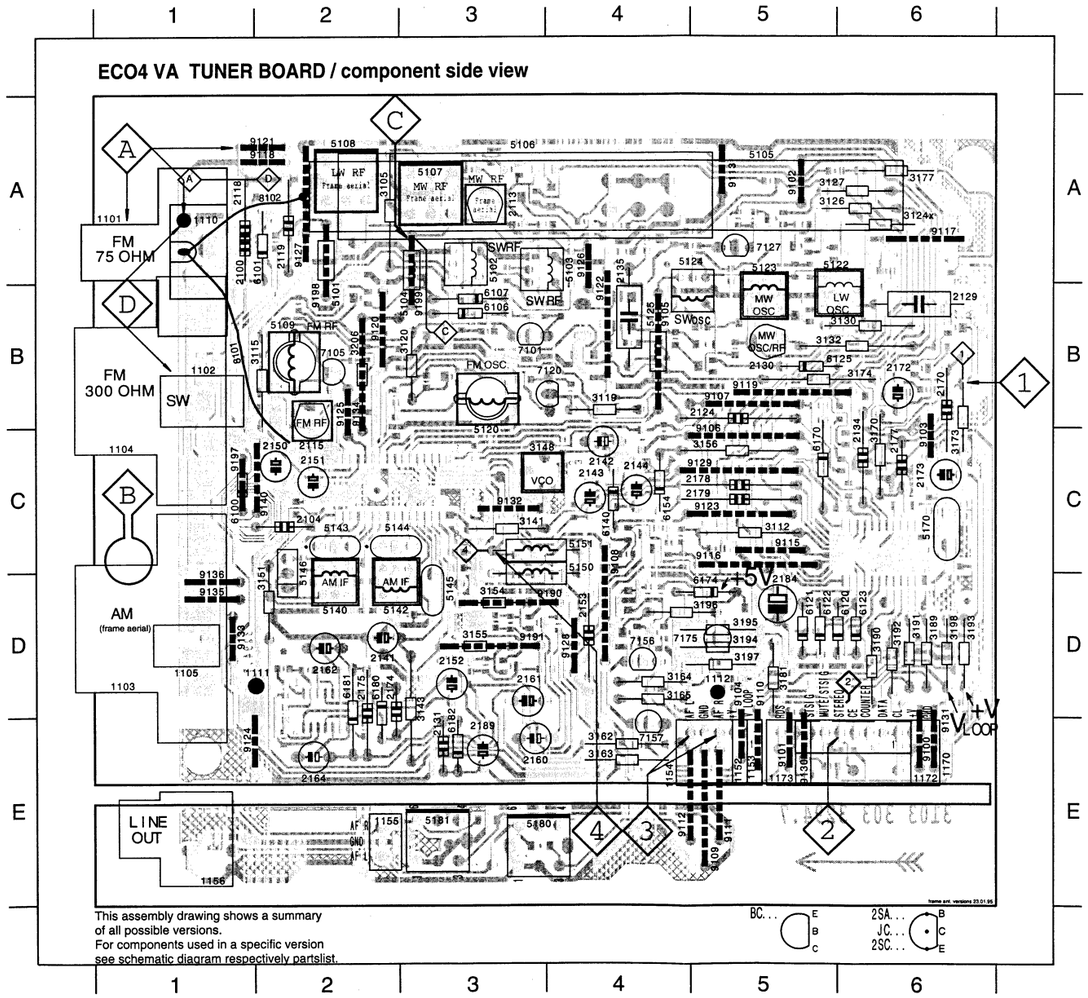

This assembly drawing shows a summary of all possible versions.
For components used in a specific version see schematic diagram respectively partslist.

BC... E B C
2SA... B
JC... C
2SC... E

ECO4

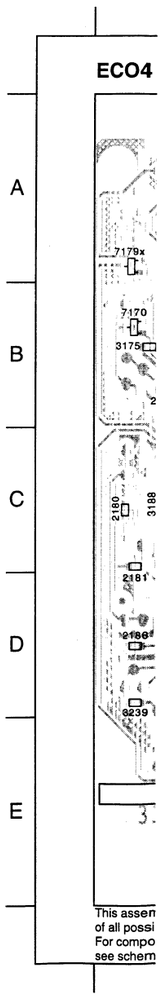

This assem
of all possi
For compo
see schem

1101 A 1	1173 E 5	2142 C 4	2175 D 2	3127 A 6	3173 B 6	5101 A 2	5142 D 2	6121 D 5	7156 D 4	9110 E 5	9126 A 4	9198 A 2
1102 B 1	2100 A 1	2143 C 4	2177 C 6	3130 B 6	3174 B 5	5102 A 3	5143 C 2	6122 D 5	7157 E 4	9111 E 5	9127 A 2	9199 A 3
1103 D 1	2104 C 2	2144 C 4	2178 C 5	3132 B 6	3177 A 6	5103 A 3	5144 C 2	6123 D 6	7175 D 5	9112 E 4	9128 D 4	
1104 B 1	2106 B 4	2150 C 2	2179 C 5	3141 C 3	3181 D 5	5104 A 3	5145 D 3	6125 B 5	8101 B 1	9113 A 5	9129 C 5	
1105 D 1	2113 A 3	2151 C 2	2184 D 5	3143 D 3	3189 D 6	5105 A 4	5146 D 2	6140 C 4	8102 A 1	9115 C 5	9130 E 5	
1110 A 1	2115 B 2	2152 D 3	2189 E 3	3148 C 3	3190 D 6	5106 A 4	5150 D 3	6154 C 4	9100 E 6	9116 C 5	9131 E 6	
1111 D 2	2118 A 1	2153 D 4	2190 A 2	3151 D 2	3191 D 6	5107 A 3	5151 C 3	6170 C 5	9101 E 5	9117 A 6	9132 C 3	
1112 D 5	2119 A 2	2160 E 3	2191 A 6	3154 D 3	3192 D 6	5108 A 2	5170 C 6	6174 D 5	9102 A 5	9118 A 2	9133 D 1	
1152 E 5	2124 B 5	2161 D 3	3105 A 2	3155 D 3	3193 D 6	5109 B 2	5180 E 3	6180 D 2	9103 C 6	9119 B 5	9134 B 2	
1153 E 5	2129 B 6	2162 D 2	3112 C 5	3156 C 5	3194 D 5	5120 B 3	5181 E 3	6181 D 2	9104 E 5	9120 B 2	9135 D 1	
1154 E 4	2130 B 5	2164 E 2	3115 B 2	3162 E 4	3195 D 5	5122 B 6	6100 C 1	6182 E 3	9105 B 4	9121 A 2	9136 D 1	
1155 E 2	2131 E 3	2170 B 6	3119 B 4	3163 E 4	3196 D 4	5123 B 5	6101 A 2	7101 B 3	9106 C 5	9122 B 4	9140 C 2	
1156 E 1	2134 C 6	2172 B 6	3120 B 3	3164 D 4	3197 D 5	5124 B 5	6106 B 3	7105 B 2	9107 B 5	9123 C 5	9190 D 3	
1170 E 6	2135 B 4	2173 C 6	3124 A 6	3165 D 4	3198 D 6	5125 B 4	6107 B 3	7120 B 4	9108 D 4	9124 E 1	9191 D 3	
1172 E 6	2141 D 2	2174 D 2	3126 A 6	3170 C 6	3206 B 2	5140 D 2	6120 D 6	7127 A 5	9109 E 5	9125 B 2	9197 C 1	

o for AM-version only
x for LW-version only
y for USA version only
z not for all versions

ECO4 VA TUNER BOARD / component side view

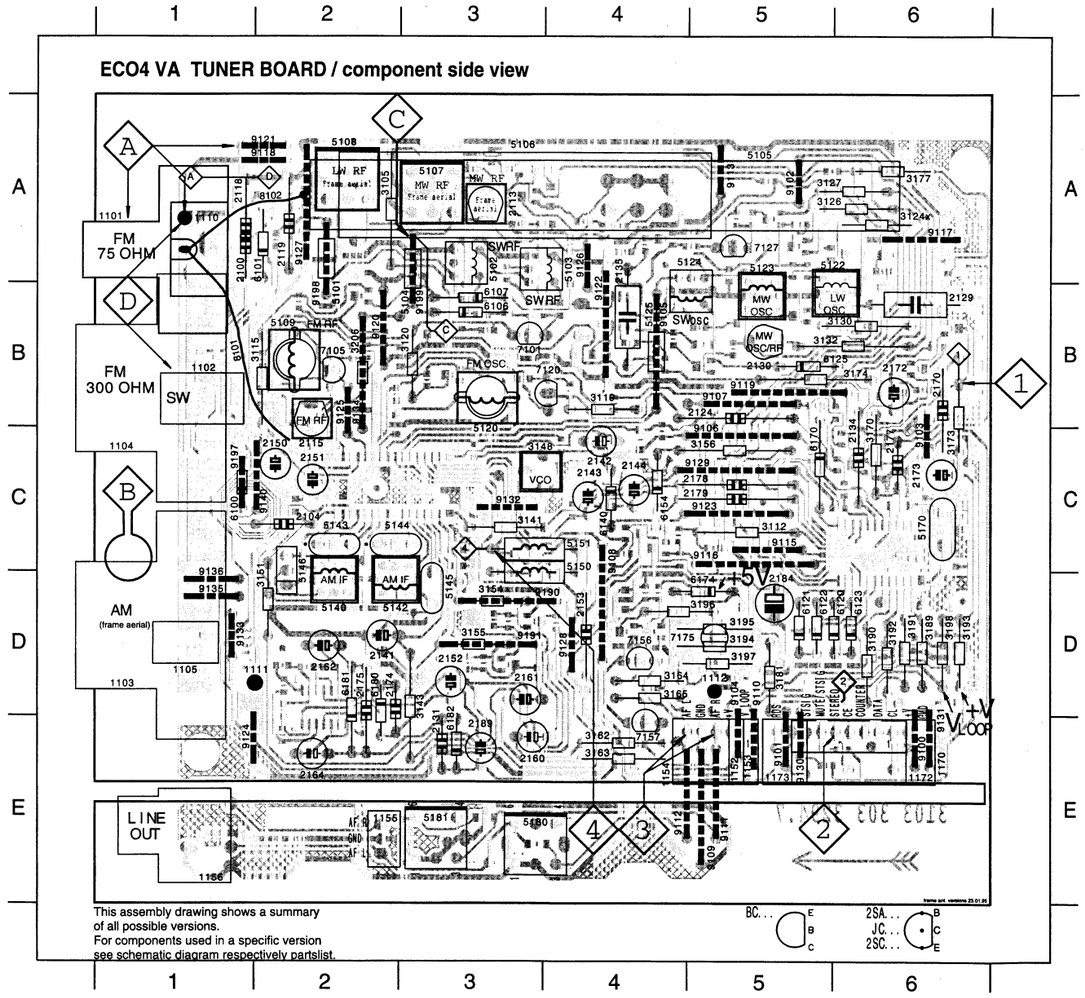

This assembly drawing shows a summary of all possible versions.
For components used in a specific version see schematic diagram respectively partslist.

2101 A 2	2122 B 3	2148 D 2	2183 C 6	3104 B 3	3125x A 5	3147 C 4	3175 B 6	3203 D 3	3226o A 4	3243o A 5	7121x A 6	7172 C 5
2102 A 4	2123 B 4	2149 D 2	2185 B 3	3106 B 4	3128 B 4	3149 C 3	3176 E 6	3204 D 3	3228 C 5	3244 A 5	7122 A 5	7173 C 6
2103 C 2	2125x A 6	2154 C 3	2186 D 6	3107x A 5	3129x B 6	3152 C 1	3178 C 6	3205 D 3	3229o A 4	3245o A 3	7123x B 6	7174 D 5
2105 B 3	2126x A 3	2155 C 3	2187 D 4	3108 B 2	3131 B 5	3153 B 5	3179 C 6	3210 B 1	3231 C 2	3246 B 2	7124 B 5	7176 D 4
2107 B 2	2128 A 5	2158 D 3	2188 E 4	3109x A 5	3133 A 5	3157 B 2	3180 D 5	3211 B 6	3232 C 4	3247 B 3	7125 B 5	7177 D 4
2108 A 3	2132 B 4	2159 D 3	2192 E 4	3110 C 4	3134 A 5	3158x A 4	3182 C 4	3212 C 5	3233 A 4	3248 C 3	7128x A 4	7178 C 6
2109 B 4	2133x A 4	2163 D 2	2193 C 4	3111 D 3	3135 A 6	3159 C 4	3183 D 5	3213 D 5	3234 A 2	6103 A 2	7129 A 5	7179x A 6
2110o A 4	2136 B 5	2165 E 2	2194 C 5	3113 B 2	3136 E 2	3160 D 4	3184 D 6	3214 E 3	3235 C 4	6105 B 4	7140 C 2	7180 D 2
2111 B 3	2137 B 5	2167 C 3	2197 D 6	3114 B 3	3137 D 2	3161 D 3	3185 B 6	3215 E 3	3236o A 2	6109 B 2	7154 D 3	
2112 B 4	2138o B 4	2168 C 3	2198 D 6	3116x A 3	3138 D 2	3166 E 5	3186 C 4	3216 E 4	3237 B 5	6110 B 4	7155 D 3	
2114x A 3	2139x A 4	2169 C 4	2199 D 6	3117 A 3	3139 D 2	3167 D 5	3187 C 4	3221 A 4	3238x A 5	6124 B 3	7167 C 4	
2116 B 2	2140 A 5	2171 B 6	3100 B 2	3118 A 5	3140 D 2	3168 D 4	3188 C 6	3222o A 4	3239 D 6	7100 B 2	7168 C 6	
2117 A 4	2145x A 4	2180 C 6	3101 B 3	3121 B 4	3142 C 4	3169 D 4	3199 D 4	3223x A 3	3240 D 5	7102x A 3	7169 C 6	
2120 B 3	2146x A 3	2181 C 6	3102 B 3	3122 B 4	3144 C 5	3171 D 6	3200 C 6	3224 B 4	3241o A 6	7103 C 4	7170 B 6	
2121 B 2	2147 D 3	2182 D 4	3103 C 4	3123 C 5	3145 C 4	3172 B 6	3202 D 3	3225 B 4	3242 B 5	7104x A 3	7171 B 6	

o for AM-version only
x for LW-version only
y for USA version only
z not for all versions

ECO4 VA TUNER BOARD / copper side view

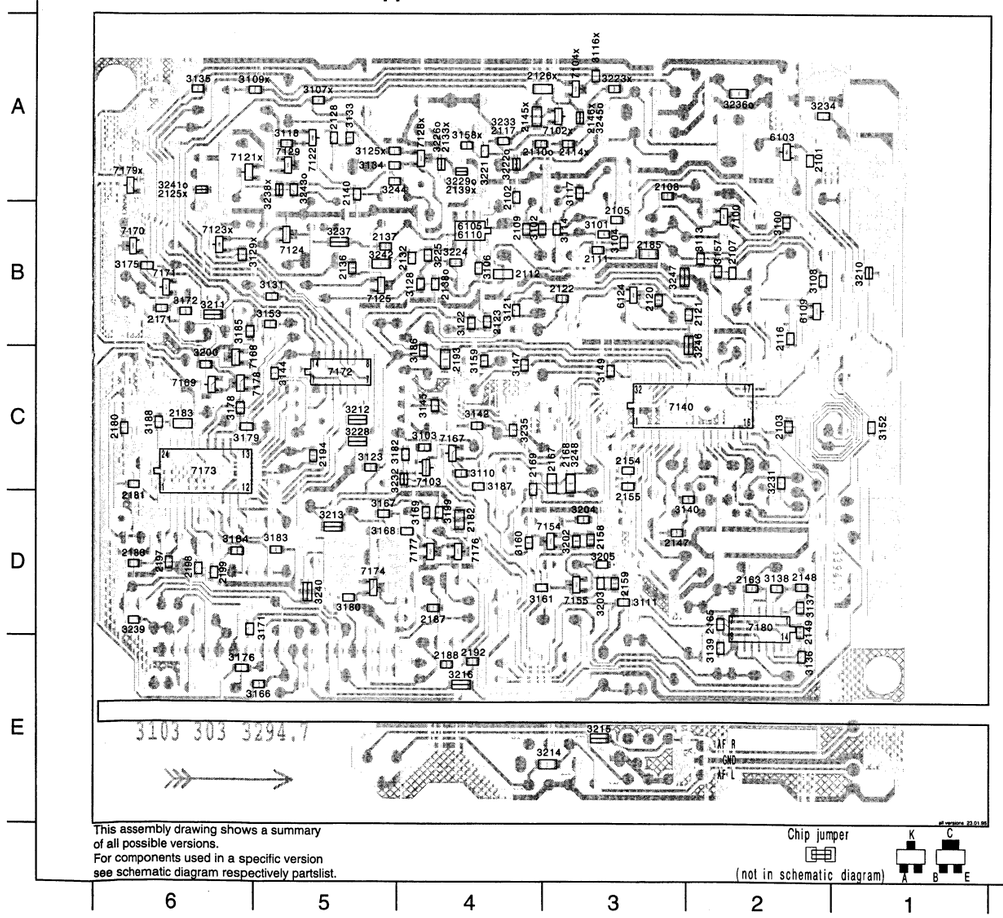

This assembly drawing shows a summary of all possible versions.
For components used in a specific version see schematic diagram respectively partslist.

Chip jumper
(not in schematic diagram)

7A-3

TUNER UNIT ECO4-VA (MINI)

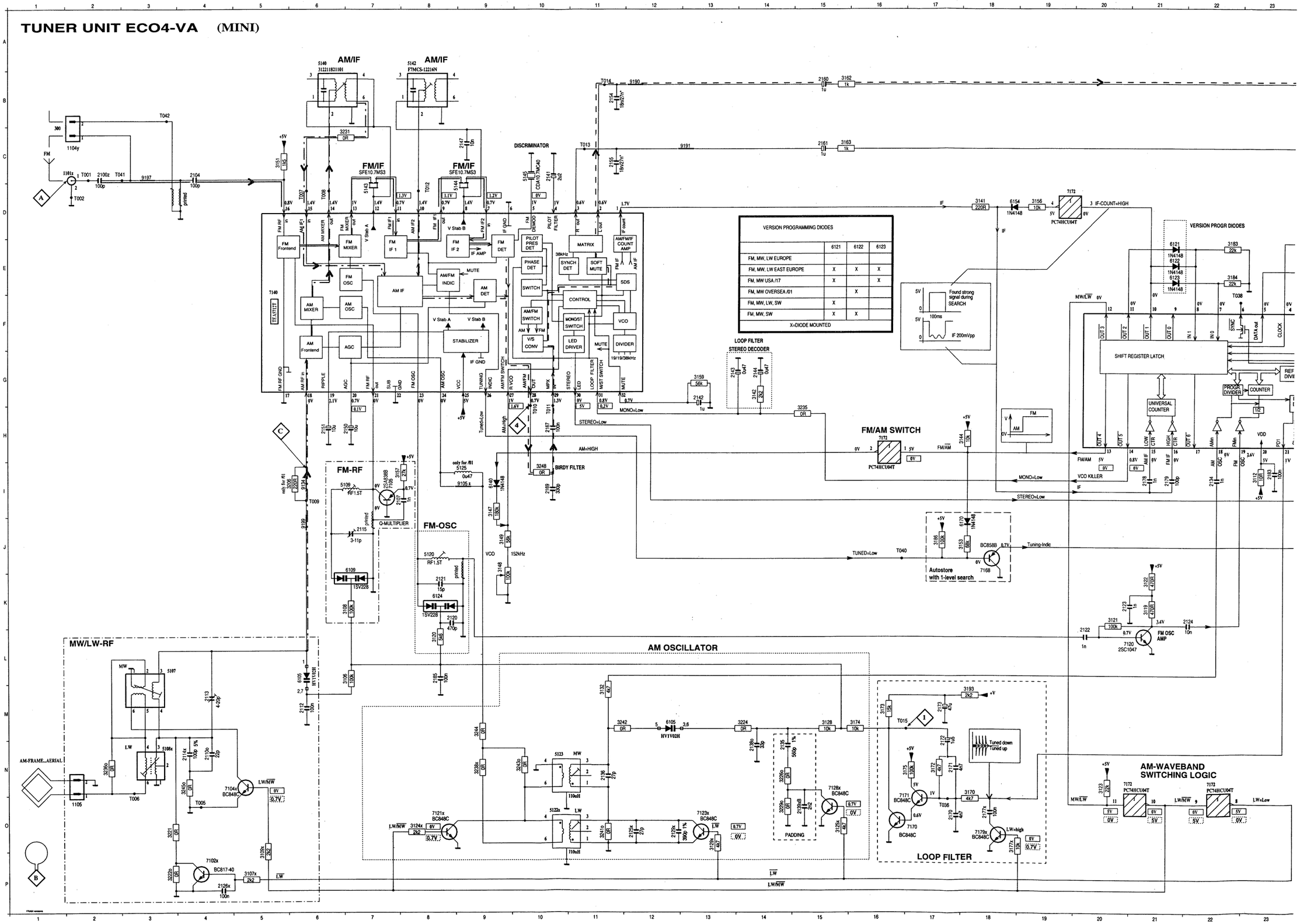

7A-3

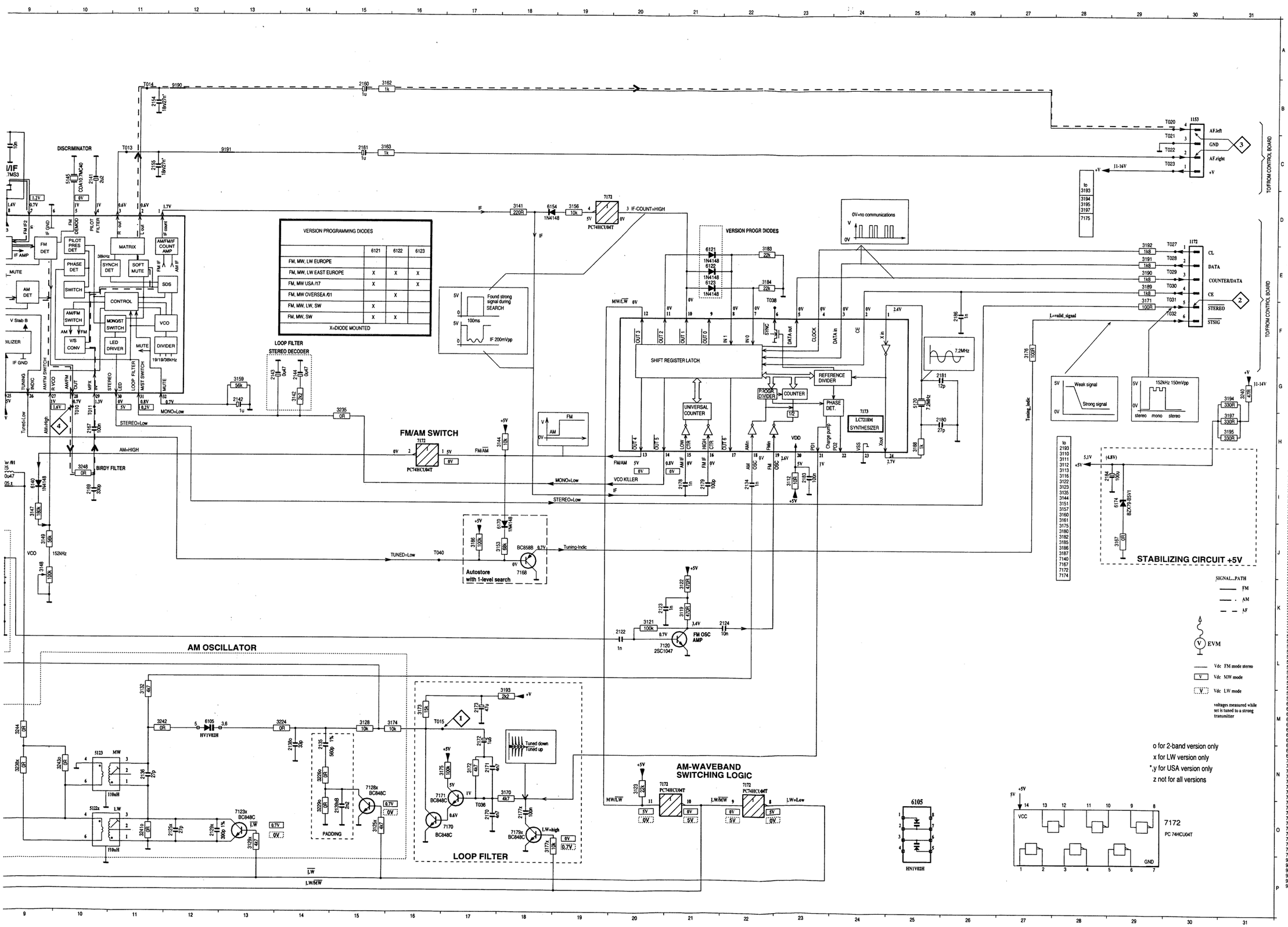
DISCRIMINATOR
FM DET
IF AMP
MUTE
AM DET
PILOT PRES DET
PHASE DET
SWITCH
MATRIX
SYNCH DET
SOFT MUTE
SDS
CONTROL
AM/FM SWITCH
V/S CONV
MONO/ST SWITCH
LED DRIVER
VCO
MUTE
DIVIDER
19/19/38kHz
AM/FM IF COUNT AMP
VERSION PROGRAMMING DIODES
X=DIODE MOUNTED
LOOP FILTER
STEREO DECODER
FM/AM SWITCH
PC74HCU04T
BIRDY FILTER
AM OSCILLATOR
AM-WAVEBAND SWITCHING LOGIC
LOOP FILTER
Autostore with 1-level search
BC858B
FM OSC AMP
2SC1047
VERSION PROGR DIODES
SHIFT REGISTER LATCH
REFERENCE DIVIDER
P-DIVIDER
COUNTER
PHASE DET.
UNIVERSAL COUNTER
LC72118M SYNTHESIZER
VCO KILLER
Found strong signal during SEARCH
IF 200mVpp
0V=no communications
Weak signal
Strong signal
152kHz 150mVpp
stereo mono stereo
AF.left
GND
AF.right
+V
CL
DATA
COUNTER/DATA
CE
STEREO
STSIG
TO/FROM CONTROL BOARD
STABILIZING CIRCUIT +5V
SIGNAL PATH
FM
AM
AF
EVM
Vdc FM mode stereo
Vdc MW mode
Vdc LW mode
voltages measured while set is tuned to a strong transmitter
o for 2-band version only
x for LW version only
*,y for USA version only
z not for all versions
HN1V02H
7172
PC 74HCU04T
VCC
GND

Remarks

ELECTRICAL PARTSLIST TUNER ECO4VA BOARD

MISCELLANEOUS

1101	4822 267 10283	SOCKET COAX IEC 75R
1105	4822 265 31184	JST CONNECTOR 2 POLE

DIODES

6105	4822 130 83075	HN1V02H
6109	4822 130 82833	1SV228
6122	4822 130 30621	1N4148
6124	4822 130 82833	1SV228
6140	4822 130 30621	1N4148
6154	4822 130 30621	1N4148
6170	4822 130 30621	1N4148
6174	4822 130 34233	BZX79-B5V1

TRANSISTORS

7105	4822 130 60093	2SA838B
7120	4822 130 60163	2SC1047
7168	5322 130 41983	BC858B(CHIP)
7170	5322 130 42136	BC848C(CHIP)
7171	5322 130 42136	BC848C(CHIP)

INTEGRATED CIRCUITS

7140	4822 209 32701	TEA5712T/N2 (RF IC)
7172	5322 209 11517	PC74HCU04T
7173	4822 209 31998	LC7218M SYNTHESIZER

COILS

5107	4822 157 63835	ANT. COIL MW 2-BAND
5109	4822 156 30947	RF COIL 1,5 TURNS
5120	4822 156 30947	RF COIL 1,5 TURNS
5123	4822 157 60517	110µH 8%
5125	4822 157 61898	0,47µH
5140	4822 158 60511	AM-IF FILTER 450kHz
5142	4822 157 70302	AM-IF FILTER 450kHz
5143	4822 242 70665	CER. FILTER 10,7MHZ
5144	4822 242 70665	CER. FILTER 10,7MHZ
5145	4822 242 81362	CER. DISCRIMINATOR
5170	4822 242 72976	CER.RESONATOR 7,2MHz

RESISTORS

3112	4822 116 52176	10R	5%	0,5W
3119	4822 116 52224	470R	5%	0,5W
3120	4822 116 52289	5k6	5%	0,16W
3132	4822 116 52283	4k7	5%	0,5W
3141	4822 116 52215	220R	5%	0,16W
3148	4822 100 11163	TRIMPOT.100k lin.		
3151	4822 116 52243	1k5	5%	0,16W
3156	4822 116 83864	10k	5%	0,5W
3162	4822 050 11002	1k	5%	0,2W
3163	4822 050 11002	1k	5%	0,2W
3170	4822 116 52283	4k7	5%	0,5W
3173	4822 116 52244	15k	5%	0,5W
3174	4822 116 83864	10k	5%	0,5W
3189	4822 116 52249	1k8	5%	0,16W
3190	4822 116 52249	1k8	5%	0,16W
3191	4822 116 52249	1k8	5%	0,16W
3192	4822 116 52249	1k8	5%	0,16W
3193	4822 116 52256	2k2	5%	0,16W
3194	4822 116 52219	330R	5%	0,5W
3195	4822 116 52219	330R	5%	0,5W

RESISTORS

3197	4822 116 52219	330R	5%	0,5W
3206	4822 116 52215	220R	5%	0,16W

CHIP RESISTORS

3106	4822 051 20104	100k	5%	0,1W
3108	4822 051 20104	100k	5%	0,1W
3121	4822 051 20104	100k	5%	0,1W
3122	4822 051 20471	470R	5%	0,1W
3123	4822 051 20223	22k	5%	0,1W
3128	4822 117 10833	10k	1%	0,1W
3142	4822 051 20222	2k2	5%	0,1W
3144	4822 117 10833	10k	1%	0,1W
3147	4822 051 20184	180k	5%	0,1W
3149	4822 051 20563	56k	5%	0,1W
3153	4822 051 20683	68k	5%	0,1W
3157	4822 051 20273	27k	5%	0,1W
3159	4822 051 20563	56k	5%	0,1W
3167	4822 051 20008	CHIP JUMPER 0805		
3171	4822 051 20101	100R	5%	0,1W
3172	4822 051 20472	4k7	5%	0,1W
3175	4822 051 20104	100k	5%	0,1W
3176	4822 051 20101	100R	5%	0,1W
3183	4822 051 20223	22k	5%	0,1W
3184	4822 051 20223	22k	5%	0,1W
3186	4822 051 20104	100k	5%	0,1W
3188	4822 051 10102	1k	2%	0,25W
3210	4822 051 20008	CHIP JUMPER 0805		
3211	4822 051 10008	CHIP JUMPER1206		
3212	4822 051 10008	CHIP JUMPER1206		
3213	4822 051 10008	CHIP JUMPER1206		
3221	4822 051 20008	CHIP JUMPER 0805		
3222	4822 051 20008	CHIP JUMPER 0805		
3224	4822 051 20008	CHIP JUMPER 0805		
3226	4822 051 20008	CHIP JUMPER 0805		
3228	4822 051 10008	CHIP JUMPER1206		
3229	4822 051 20008	CHIP JUMPER 0805		
3231	4822 051 20008	CHIP JUMPER 0805		
3235	4822 051 20008	CHIP JUMPER 0805		
3236	4822 051 10008	CHIP JUMPER1206		
3237	4822 051 10008	CHIP JUMPER1206		
3240	4822 051 10479	47R		
3241	4822 051 20008	CHIP JUMPER 0805		
3242	4822 051 10008	CHIP JUMPER1206		
3243	4822 051 20008	CHIP JUMPER 0805		
3244	4822 051 20008	CHIP JUMPER 0805		
3246	4822 051 10008	CHIP JUMPER1206		
3247	4822 051 10008	CHIP JUMPER1206		
3248	4822 051 10008	CHIP JUMPER1206		

CAPACITORS

2100	4822 122 33195	100pF	10%	50V
2104	4822 122 33195	100pF	10%	50V
2113	4822 125 50355	4,2-20pF VARIABLE		
2115	4822 125 60101	10pF VARIABLE		
2124	4822 121 51387	10nF	20%	16V
2134	4822 122 33197	1nF	10%	50V
2135	4822 121 70245	560pF	1%	160V
2141	4822 124 40244	2,2µF	20%	63V
2142	4822 124 40242	1µF	20%	63V
2143	4822 124 40239	0,47µF	20%	63V

ELECTRICAL PAR

CAPACITORS

2144	4822 124 4(
2150	4822 124 4(
2151	4822 124 4(
2160	4822 124 4(
2161	4822 124 4(
2170	4822 126 1
2172	4822 124 4
2173	4822 124 4(
2178	4822 122 3
2179	4822 122 3
2184	4822 124 4

CHIP CAPACITORS

2107	5322 122 3
2112	4822 122 3
2120	5322 122 3
2121	5322 122 3
2122	5322 122 3
2123	5322 122 3
2136	5322 122 3
2138	5322 122 3
2147	4822 122 3
2154	4822 122 3
2155	4822 122 3
2167	4822 122 3
2169	5322 122 3
2171	5322 126 1(
2180	5322 122 3
2181	4822 122 3
2183	4822 122 3
2185	4822 122 3
2186	5322 122 3

ELECTRICAL PARTSLIST TUNER ECO4VA BOARD

MISCELLANEOUS

1101	4822 267 10283	SOCKET COAX IEC 75R
1105	4822 265 31184	JST CONNECTOR 2 POLE

DIODES

6105	4822 130 83075	HN1V02H
6109	4822 130 82833	1SV228
6122	4822 130 30621	1N4148
6124	4822 130 82833	1SV228
6140	4822 130 30621	1N4148
6154	4822 130 30621	1N4148
6170	4822 130 30621	1N4148
6174	4822 130 34233	BZX79-B5V1

TRANSISTORS

7105	4822 130 60093	2SA838B
7120	4822 130 60163	2SC1047
7168	5322 130 41983	BC858B(CHIP)
7170	5322 130 42136	BC848C(CHIP)
7171	5322 130 42136	BC848C(CHIP)

INTEGRATED CIRCUITS

7140	4822 209 32701	TEA5712T/N2 (RF IC)
7172	5322 209 11517	PC74HCU04T
7173	4822 209 31998	LC7218M SYNTHESIZER

COILS

5107	4822 157 63835	ANT. COIL MW 2-BAND
5109	4822 156 30947	RF COIL 1,5 TURNS
5120	4822 156 30947	RF COIL 1,5 TURNS
5123	4822 157 60517	110µH 8%
5125	4822 157 61898	0,47µH
5140	4822 158 60511	AM-IF FILTER 450kHz
5142	4822 157 70302	AM-IF FILTER 450kHz
5143	4822 242 70665	CER. FILTER 10,7MHZ
5144	4822 242 70665	CER. FILTER 10,7MHZ
5145	4822 242 81362	CER. DISCRIMINATOR
5170	4822 242 72976	CER.RESONATOR 7,2MHz

RESISTORS

3112	4822 116 52176	10R	5%	0,5W
3119	4822 116 52224	470R	5%	0,5W
3120	4822 116 52289	5k6	5%	0,16W
3132	4822 116 52283	4k7	5%	0,5W
3141	4822 116 52215	220R	5%	0,16W
3148	4822 100 11163	TRIMPOT.100k lin.		
3151	4822 116 52243	1k5	5%	0,16W
3156	4822 116 83864	10k	5%	0,5W
3162	4822 050 11002	1k	5%	0,2W
3163	4822 050 11002	1k	5%	0,2W
3170	4822 116 52283	4k7	5%	0,5W
3173	4822 116 52244	15k	5%	0,5W
3174	4822 116 83864	10k	5%	0,5W
3189	4822 116 52249	1k8	5%	0,16W
3190	4822 116 52249	1k8	5%	0,16W
3191	4822 116 52249	1k8	5%	0,16W
3192	4822 116 52249	1k8	5%	0,16W
3193	4822 116 52256	2k2	5%	0,16W
3194	4822 116 52219	330R	5%	0,5W
3195	4822 116 52219	330R	5%	0,5W

RESISTORS

3197	4822 116 52219	330R	5%	0,5W
3206	4822 116 52215	220R	5%	0,16W

CHIP RESISTORS

3106	4822 051 20104	100k	5%	0,1W
3108	4822 051 20104	100k	5%	0,1W
3121	4822 051 20104	100k	5%	0,1W
3122	4822 051 20471	470R	5%	0,1W
3123	4822 051 20223	22k	5%	0,1W
3128	4822 117 10833	10k	1%	0,1W
3142	4822 051 20222	2k2	5%	0,1W
3144	4822 117 10833	10k	1%	0,1W
3147	4822 051 20184	180k	5%	0,1W
3149	4822 051 20563	56k	5%	0,1W
3153	4822 051 20683	68k	5%	0,1W
3157	4822 051 20273	27k	5%	0,1W
3159	4822 051 20563	56k	5%	0,1W
3167	4822 051 20008	CHIP JUMPER 0805		
3171	4822 051 20101	100R	5%	0,1W
3172	4822 051 20472	4k7	5%	0,1W
3175	4822 051 20104	100k	5%	0,1W
3176	4822 051 20101	100R	5%	0,1W
3183	4822 051 20223	22k	5%	0,1W
3184	4822 051 20223	22k	5%	0,1W
3186	4822 051 20104	100k	5%	0,1W
3188	4822 051 10102	1k	2%	0,25W
3210	4822 051 20008	CHIP JUMPER 0805		
3211	4822 051 10008	CHIP JUMPER1206		
3212	4822 051 10008	CHIP JUMPER1206		
3213	4822 051 10008	CHIP JUMPER1206		
3221	4822 051 20008	CHIP JUMPER 0805		
3222	4822 051 20008	CHIP JUMPER 0805		
3224	4822 051 20008	CHIP JUMPER 0805		
3226	4822 051 20008	CHIP JUMPER 0805		
3228	4822 051 10008	CHIP JUMPER1206		
3229	4822 051 20008	CHIP JUMPER 0805		
3231	4822 051 20008	CHIP JUMPER 0805		
3235	4822 051 20008	CHIP JUMPER 0805		
3236	4822 051 10008	CHIP JUMPER1206		
3237	4822 051 10008	CHIP JUMPER1206		
3240	4822 051 10479	47R		
3241	4822 051 20008	CHIP JUMPER 0805		
3242	4822 051 10008	CHIP JUMPER1206		
3243	4822 051 20008	CHIP JUMPER 0805		
3244	4822 051 20008	CHIP JUMPER 0805		
3246	4822 051 10008	CHIP JUMPER1206		
3247	4822 051 10008	CHIP JUMPER1206		
3248	4822 051 10008	CHIP JUMPER1206		

CAPACITORS

2100	4822 122 33195	100pF	10%	50V
2104	4822 122 33195	100pF	10%	50V
2113	4822 125 50355	4,2-20pF VARIABLE		
2115	4822 125 60101	10pF VARIABLE		
2124	4822 121 51387	10nF	20%	16V
2134	4822 122 33197	1nF	10%	50V
2135	4822 121 70245	560pF	1%	160V
2141	4822 124 40244	2,2µF	20%	63V
2142	4822 124 40242	1µF	20%	63V
2143	4822 124 40239	0,47µF	20%	63V

7A-4

ELECTRICAL PARTSLIST TUNER ECO4VA BOARD

CAPACITORS

2144	4822 124 40239	0,47µF	20%	63V
2150	4822 124 40248	10µF	20%	63V
2151	4822 124 40248	10µF	20%	63V
2160	4822 124 40242	1µF	20%	63V
2161	4822 124 40242	1µF	20%	63V
2170	4822 126 11714	4,7nF	20%	
2172	4822 124 41631	1,5µF	20%	50V
2173	4822 124 40433	47µF	20%	25V
2178	4822 122 33197	1nF	10%	50V
2179	4822 122 33195	100pF	10%	50V
2184	4822 124 41584	100µF	20%	10V

CHIP CAPACITORS

2107	5322 122 34123	1nF	10%	50V
2112	4822 122 33496	100nF	10%	63V
2120	5322 122 32268	470pF	10%	50V
2121	5322 122 32481	15pF	5%	50V
2122	5322 122 34123	1nF	10%	50V
2123	5322 122 34123	1nF	10%	50V
2136	5322 122 31946	27pF	5%	50V
2138	5322 122 32659	33pF	5%	50V
2147	4822 122 33177	10nF	20%	50V
2154	4822 122 33893	18nF	10%	63V
2155	4822 122 33893	18nF	10%	63V
2167	4822 122 33496	100nF	10%	63V
2169	5322 122 31863	330pF	5%	50V
2171	5322 126 10223	4,7nF	10%	63V
2180	5322 122 31946	27pF	5%	50V
2181	4822 122 32139	12pF	5%	63V
2183	4822 122 33496	100nF	10%	63V
2185	4822 122 33496	100nF	10%	63V
2186	5322 122 34123	1nF	10%	50V

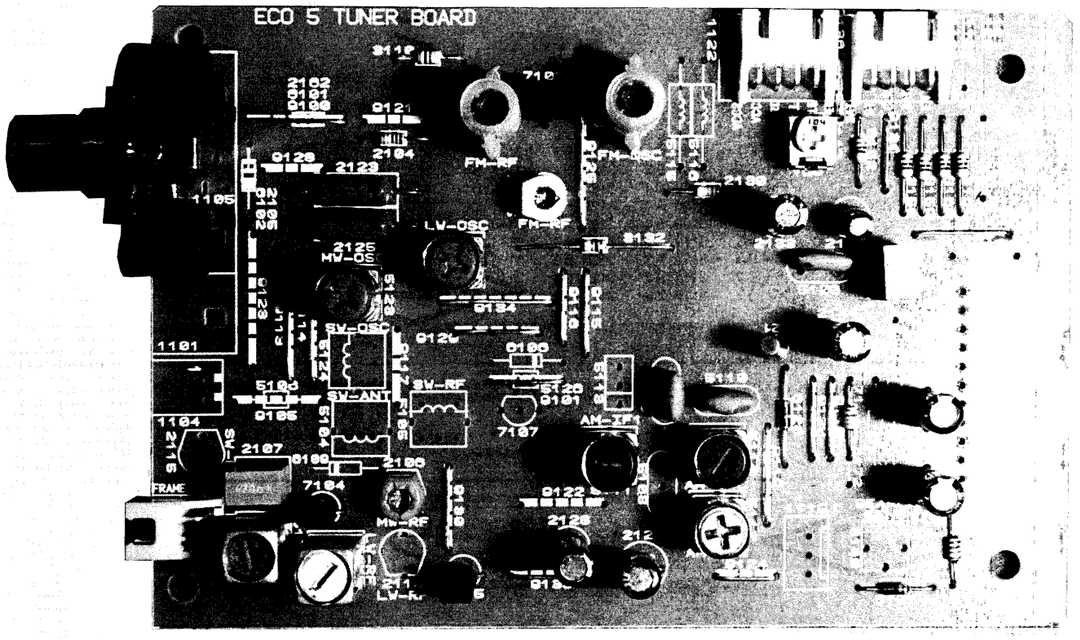

TUNER BOARD ECO5

TABLE OF CONTENTS

BLOCKDIAGRAM

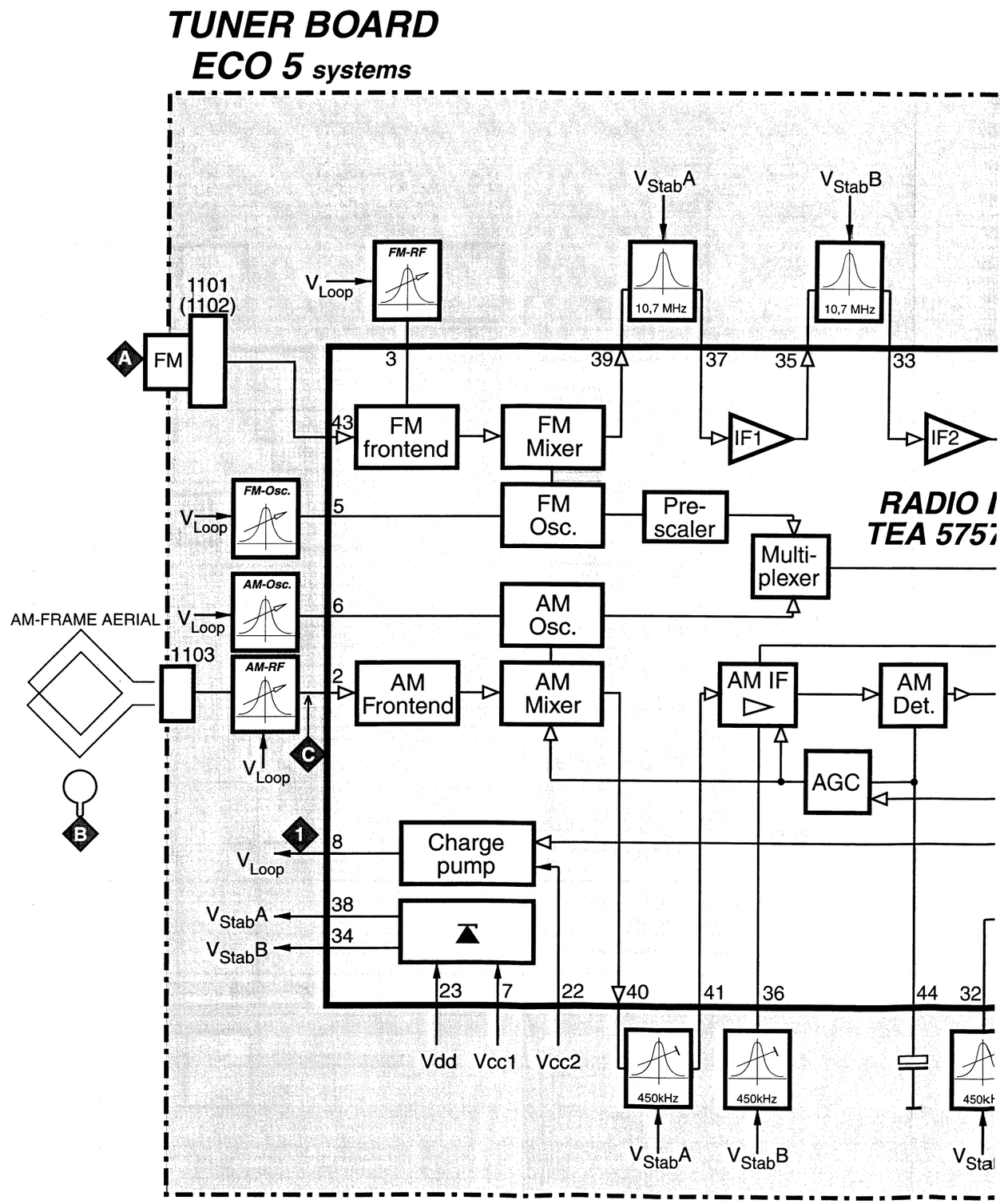

7B-1

BLOCKDIAGRAM

TUNER BOARD
ECO 5 systems

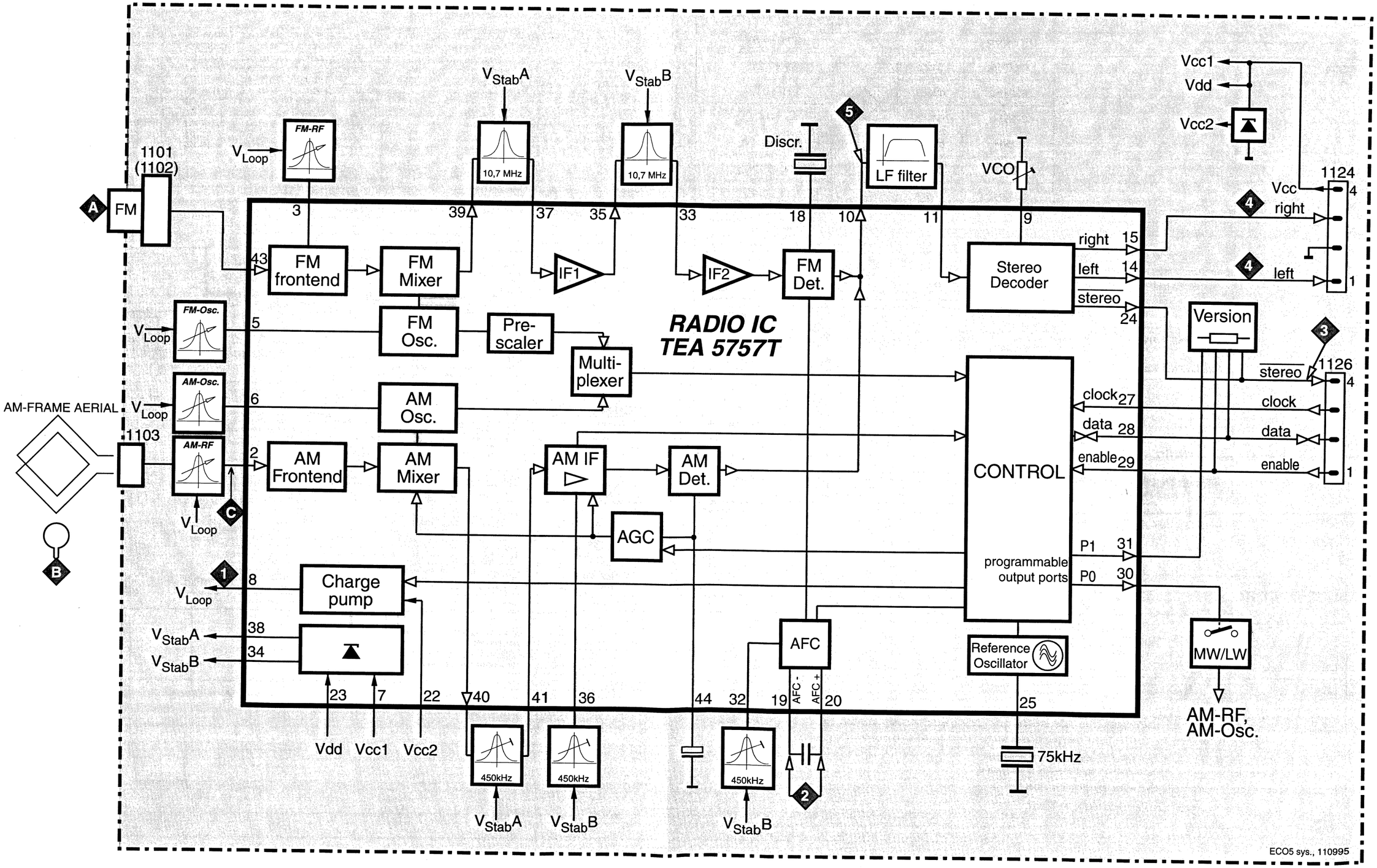

TUNER ADJUSTMENT TABLE (ECO5 FM/MW- and FM/MW/LW - versions with AM-frame aerial)

Waverange	Input frequency	Input	Tuned to	Adjust	Output	Scope/Voltmeter
VARICAP ALIGNMENT						
FM 87.5 - 108MHz			108MHz	5130	1	8V ±0.2V
			87.5MHz	check		4.3V ±0.5V
MW FM/AM-version, 10kHz grid 530 - 1700kHz			1700kHz	5123		8V ±0.2V
			530kHz	check		1.1V ±0.4V
LW 153 - 279kHz			279kHz	5122		8V ±0.2V
			153kHz	check		1.1V ±0.4V
MW FM/MW/LW- and FM/MW-version (9kHz grid) 531 - 1602kHz			1602kHz	5123		8V ±0.2V
			531kHz	check		1.1V ±0.4V
FM RF						
FM 87.5 - 108MHz	108MHz	A	108MHz	2155	4	MAX
	87.5MHz	mod=1kHz Δf=±22.5kHz	87.5MHz	5131		
VCO						
FM	98MHz, 1mV continuous wave	A	98MHz	3142	3	152kHz ±1kHz [1]
AM IF						
MW	450kHz connect pin 26 of IC 7101 (AM Osc.) with short wire to ground (pin 4)	C Δf=±15kHz V_{RF} = 3mV	IC 7101 36 100nF 220R	5111	4	max. f_o symmetric
			IC 7101 40 100nF 220R see remark [2]	5112		
AM AFC **MW**		C continuous wave V_{RF} = 10mV		5114	2	0 ± 2 mV DC
AM RF [3]						
MW [4] FM/MW/LW- and FM/MW-version (9kHz grid) 531 - 1602kHz	1494kHz	B	1494kHz	2106	4	max. f_o symmetric
	558kHz		558kHz	5102		
LW	198kHz		198kHz	5103		
MW FM/AM-version, 10kHz grid 530 - 1700kHz	1500kHz	Δf = ±30kHz V_{RF} as low as possible	1500kHz	2106		
	560kHz		560kHz	5102		

ECO5, 020995

Use service test program. By selecting the TUNER TEST test frequencies will be stored as preset frequencies automatically.

[1] If sensitivity of frequency counter is too low adjust to max. channel separation (input signal: stereo left 90% + 9%, adjust output on right channel to minimum)

[2] RC network serves for damping the IF-filter while adjusting the other one.

[3] For AM RF adjustments the original frame antenna has to be used !

[4] MW has to be aligned before LW.

↕ Repeat

1101 A1	2106 C2	2137 C5	3147 B5	3172 C5	5112 C4	5130 A3	7104 C2	9118 B4	9130 C3	2101 C4	21
1102 A1	2107 C2	2138 A5	3149 C5	3173 A5	5113 B3	5131 A3	7105 C3	9119 C4	9131 A5	2102 C4	21
1103 C1	2110 C2	2140 B5	3152 A5	5102 C2	5114 C4	6101 A2	7107 B3	9120 B4	9133 C3	2103 C3	21
1104 B1	2115 C1	2144 B5	3154 C5	5103 C2	5115 A4	6102 A1	9100 A2	9121 A2	9134 B3	2108 A4	21
1105 A1	2123 A2	2148 B4	3157 B5	5104 C2	5116 A4	6103 A1	9101 B3	9122 C3	9136 A5	2109 A4	21
1119 C5	2125 A2	2155 A3	3158 A5	5105 B2	5120 B4	6104 A2	9105 B2	9123 B1	9137 A5	2112 B5	21
1120 A5	2128 C3	2162 A2	3159 A5	5106 B2	5121 B4	6106 B3	9111 C2	9124 C4		2113 A4	21
1130 B5	2129 C4	3105 B3	3160 A5	5108 C4	5122 B3	6107 C5	9113 B2	9125 A3		2114 A4	21
1131 B5	2130 A4	3110 A2	3161 A5	5109 B4	5123 B2	6109 C2	9114 B2	9126 B5		2116 B3	21
2104 A2	2133 A4	3132 B3	3170 C5	5110 B4	5124 B2	6120 C4	9115 B3	9128 A2		2117 A3	21
2105 A1	2135 B5	3142 A4	3171 C5	5111 C3	5126 B3	7102 A3	9117 B2	9129 B3		2118 B4	21

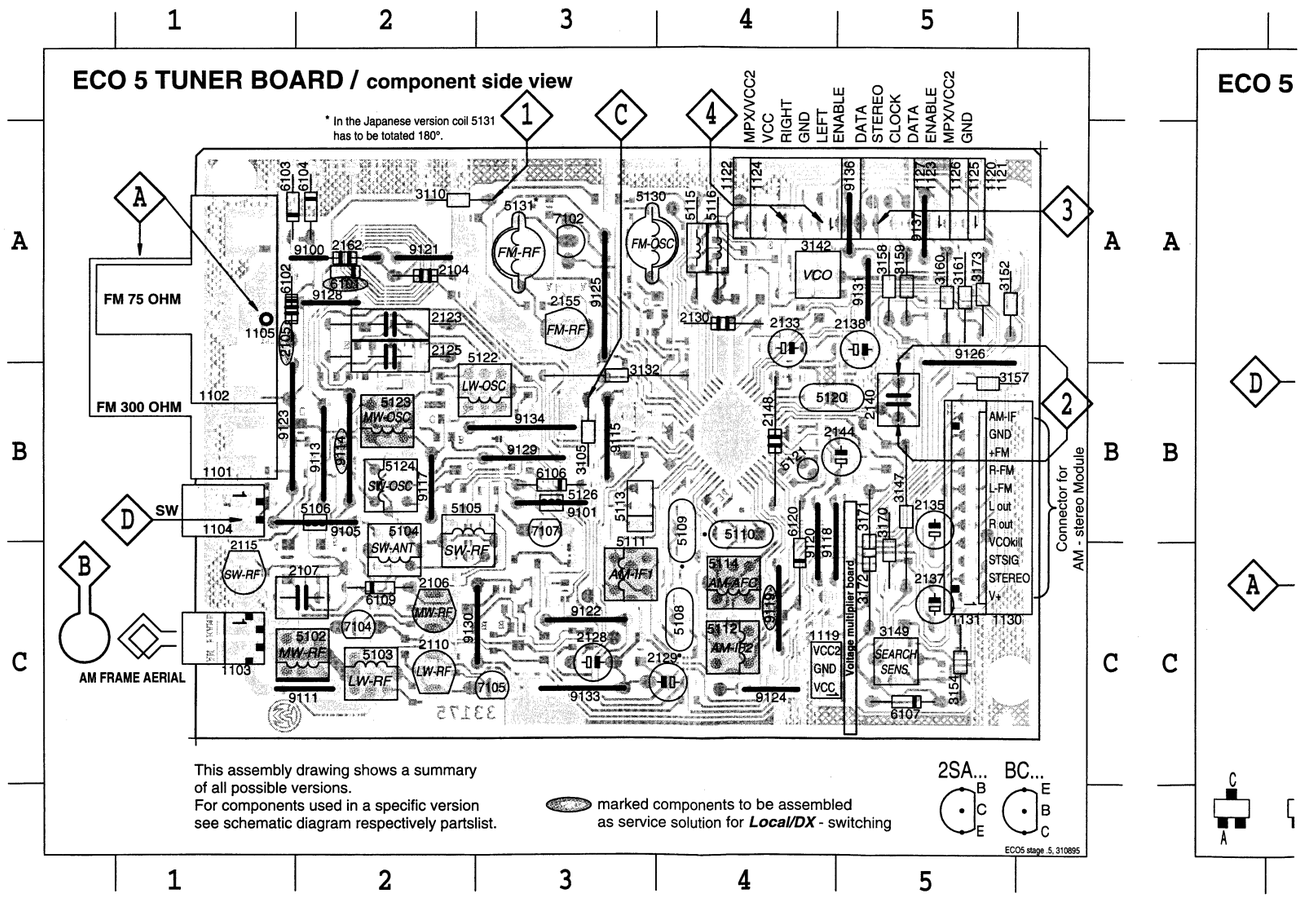

7B-2

1101 A1	2106 C2	2137 C5	3147 B5	3172 C5	5112 C4	5130 A3	7104 C2	9118 B4	9130 C3
1102 A1	2107 C2	2138 A5	3149 C5	3173 A5	5113 B3	5131 A3	7105 C3	9119 C4	9131 A5
1103 C1	2110 C2	2140 B5	3152 A5	5102 C2	5114 C4	6101 A2	7107 B3	9120 B4	9133 C3
1104 B1	2115 C1	2144 B5	3154 C5	5103 C2	5115 A4	6102 A1	9100 A2	9121 A2	9134 B3
1105 A1	2123 A2	2148 B4	3157 B5	5104 C2	5116 A4	6103 A1	9101 B3	9122 C3	9136 A5
1119 C5	2125 A2	2155 A3	3158 A5	5105 B2	5120 B4	6104 A2	9105 B2	9123 B1	9137 A5
1120 A5	2128 C3	2162 A2	3159 A5	5106 B2	5121 B4	6106 B3	9111 C2	9124 C4	
1130 B5	2129 C4	3105 B3	3160 A5	5108 C4	5122 B3	6107 C5	9113 B2	9125 A3	
1131 B5	2130 A4	3110 A2	3161 A5	5109 B4	5123 B2	6109 C2	9114 B2	9126 B5	
2104 A2	2133 A4	3132 B3	3170 C5	5110 B4	5124 B2	6120 C4	9115 B3	9128 A2	
2105 A1	2135 B5	3142 A4	3171 C5	5111 C3	5126 B3	7102 A3	9117 B2	9129 B3	

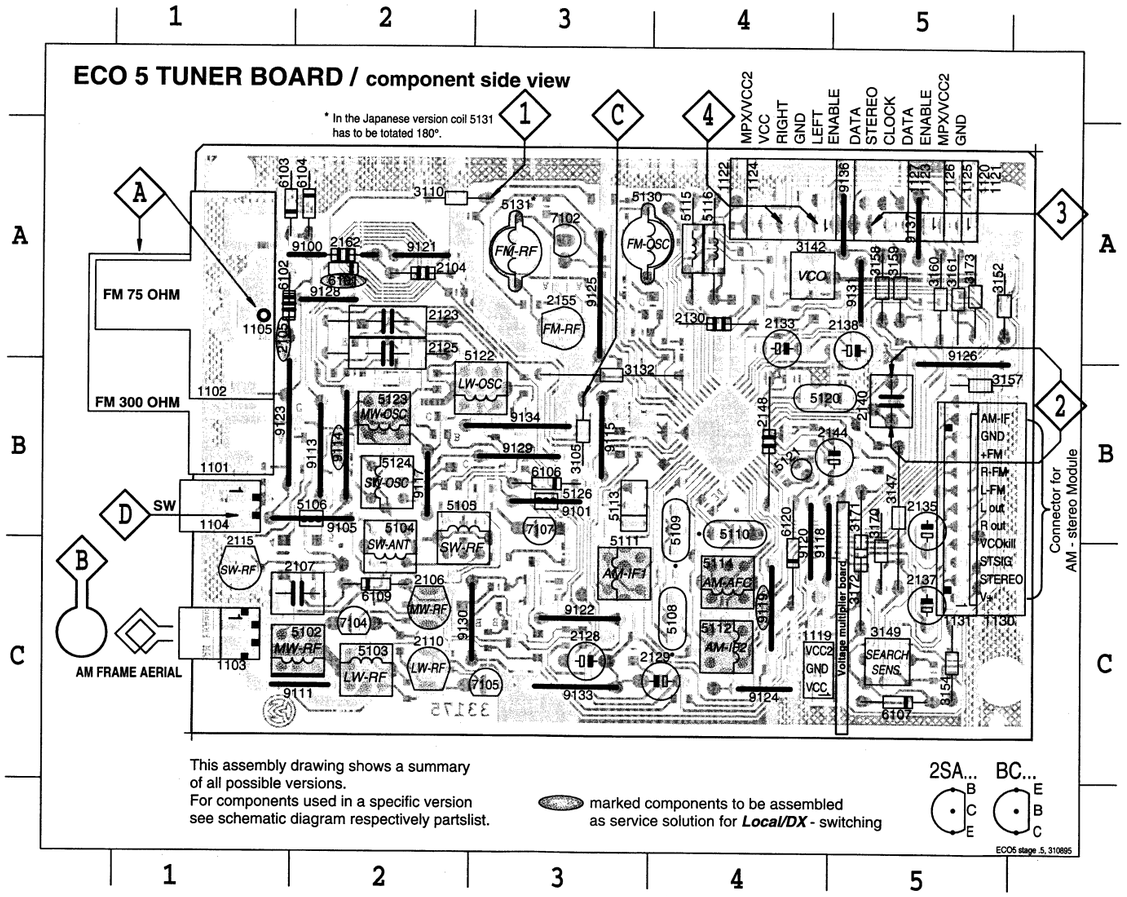

2101 C4	2119 B4	2141 B1	2154 C3	3101 C3	3116 A3	3133 B4	3153 C2	4103 C2	4151 B3	6110 A4	7121 B3
2102 C4	2120 B4	2142 B1	2156 C4	3102 C3	3117 B4	3134 B4	3155 A2	4104 A2	4152 B3	6111 B4	7122 B4
2103 C3	2122 B3	2143 A1	2157 B4	3103 C3	3118 B3	3136 B4	3156 A1	4105 B3	4153 B4	6130 C2	7123 B4
2108 A4	2124 A5	2145 C1	2158 B4	3104 B3	3120 B4	3137 B4	3167 C2	4106 B4	4154 C3	6131 C3	7124 C4
2109 A4	2126 C2	2146 C1	2159 C2	3106 C4	3121 A3	3140 B1	3168 B3	4107 C4	4155 A4	7101 B2	
2112 B5	2127 C2	2147 C1	2160 C4	3108 A4	3122 B3	3141 C2	3169 B2	4108 B4	4156 A2	7103 C2	
2113 A4	2131 C2	2149 B2	2161 A3	3109 A4	3123 A3	3143 C2	3175 A2	4109 A3	4157 B3	7106 A4	
2114 A4	2132 C1	2150 B2	2163 A2	3111 A3	3125 A3	3144 C2	3176 C2	4110 A3	4158 C2	7108 A3	
2116 B3	2134 C1	2151 C2	2165 B3	3112 A3	3126 B3	3145 C2	3177 A1	4111 C1	4159 A2	7109 A3	
2117 A3	2136 B1	2152 C3	2166 B2	3114 A3	3127 B3	3146 A1	4101 A4	4120 C2	4160 A1	7111 A1	
2118 B4	2139 B2	2153 C3	2167 B2	3115 A3	3128 B3	3148 A1	4102 A4	4150 B2	6105 A4	7120 B4	

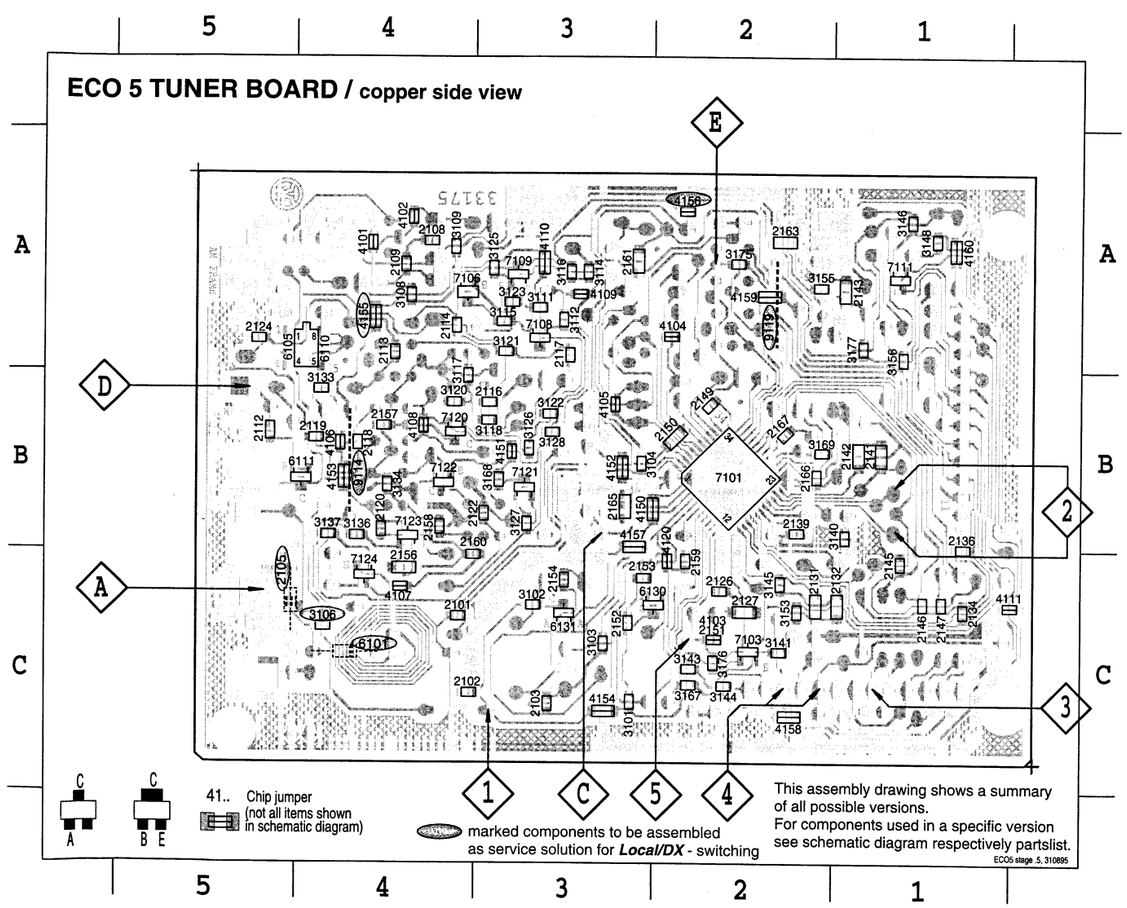

ECO5, 020995

7B-3

TUNER BOARD ECO5 / Systems

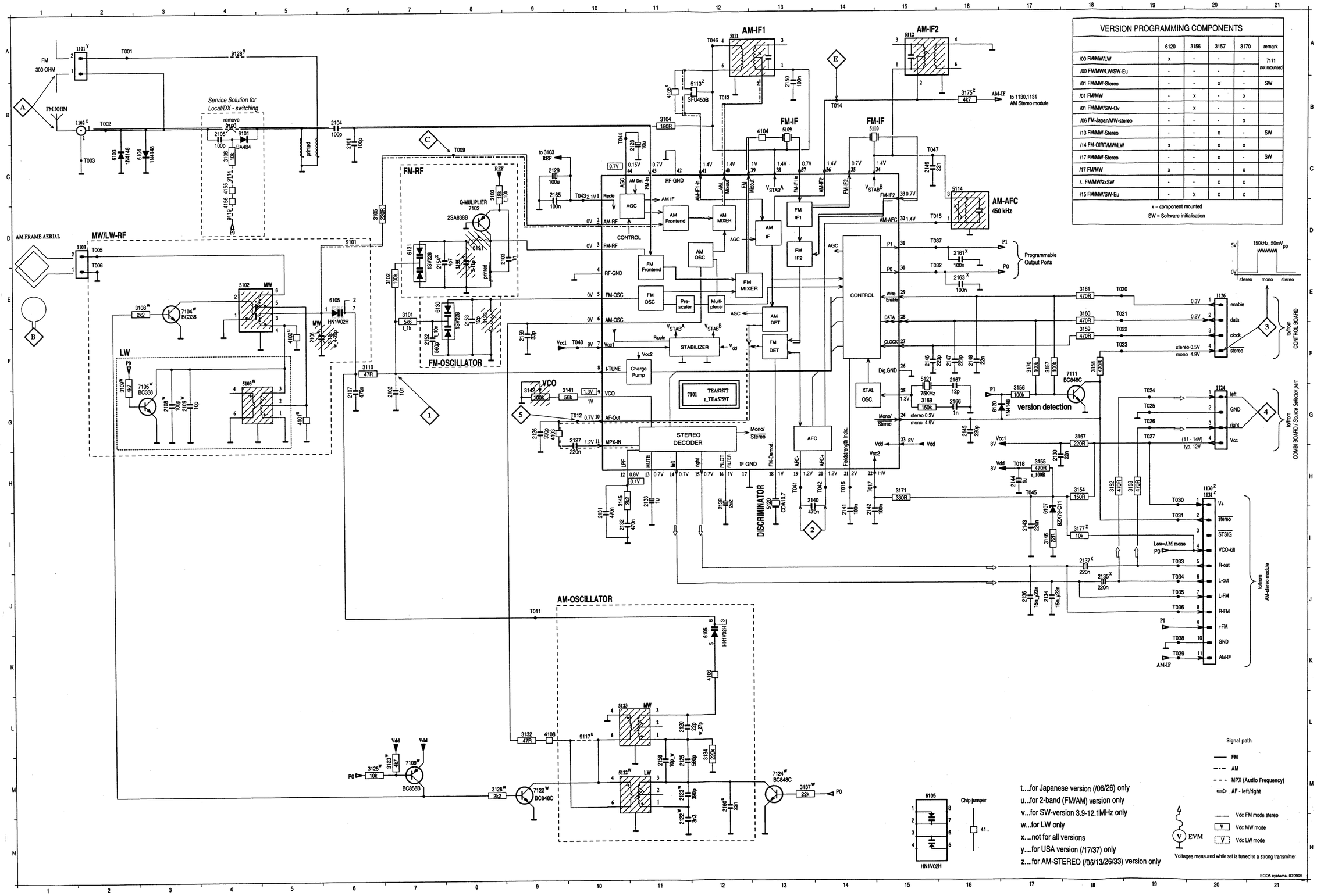

VERSION PROGRAMMING COMPONENTS

	6120	3156	3157	3170	remark
/00 FM/MW/LW	x	-	-	-	7111 not mounted
/00 FM/MW/LW/SW-Eu	-	-	-	-	
/01 FM/MW-Stereo	-	-	x	-	SW
/01 FM/MW	-	x	-	x	
/01 FM/MW/SW-Ov	-	x	-	-	
/06 FM-Japan/MW-stereo	-	-	-	x	
/13 FM/MW-Stereo	-	-	x	-	SW
/14 FM-OIRT/MW/LW	x	-	x	x	
/17 FM/MW-Stereo	-	-	x	-	SW
/17 FM/MW	x	-	-	x	
/. FM/MW/2xSW	-	-	x	x	
/15 FM/MW/SW-Eu	-	x	x	x	

x = component mounted
SW = Software initialisation

ELECTRICAL PARTSLIST TUNER ECO5 BOARD

MISCELLANEOUS

1101	4822 267 31505	SOCKET 2P CLICKFIT

DIODES

6103	4822 130 30621	1N4148
6104	4822 130 30621	1N4148
6105	4822 130 83075	HN1V02H
6107	4822 130 34488	BZX79-C11
6120	4822 130 30621	1N4148
6130	4822 130 82833	1SV228
6131	4822 130 82833	1SV228

TRANSISTORS

7102	4822 130 60093	2SA838B
7111	5322 130 42136	BC848C(CHIP)

INTEGRATED CIRCUITS

7101	4822 209 90924	TEA5757H/V1,RADIO IC

COILS

5102	4822 157 71634	RF-COIL MW
5109	4822 242 70665	CER. FILTER 10,7MHZ
5110	4822 242 70665	CER. FILTER 10,7MHZ
5111	4822 158 60511	AM-IF FILTER 450kHz
5112	4822 157 70302	AM-IF FILTER 450kHz
5114	4822 157 71637	AM-AFC FILTER 450KHZ
5120	4822 242 82065	CER. DISCRIMINATOR
5121	4822 242 81021	QUARTZ 75kHz
5123	4822 157 60517	110µH 8%
5130	4822 156 30947	RF COIL 1,5 TURNS
5131	4822 156 30947	RF COIL 1,5 TURNS

RESISTORS

3105	4822 116 52215	220R	5%	0,16W
3110	4822 116 52195	47R	5%	0,5W
3132	4822 116 52195	47R	5%	0,5W
3142	4822 100 11163	TRIMPOT.100k lin.		
3152	4822 116 52224	470R	5%	0,5W
3154	4822 116 52211	150R	5%	0,5W
3158	4822 116 52224	470R	5%	0,5W
3159	4822 116 52224	470R	5%	0,5W
3160	4822 116 52224	470R	5%	0,5W
3161	4822 116 52224	470R	5%	0,5W
3170	4822 116 52234	100k	5%	0,5W
3171	4822 116 52219	330R	5%	0,5W

CHIP RESISTORS

3101	4822 051 20562	5k6	5%	0,1W
3102	4822 051 20104	100k	5%	0,1W
3103	4822 051 20183	18k	5%	0,1W
3104	4822 051 20181	180R	5%	0,1W
3134	4822 051 20224	220k	5%	0,1W
3140	4822 051 20008	CHIP JUMPER 0805		
3141	4822 051 20563	56k	5%	0,1W
3145	4822 051 20222	2k2	5%	0,1W
3146	4822 051 20229	22R	5%	0,1W
3153	4822 051 20471	470R	5%	0,1W
3155	4822 051 20471	470R	5%	0,1W
3167	4822 051 20221	220R	5%	0,1W

CHIP RESISTORS

3169	4822 051 20154	150k	5%	0,1W
4101	4822 051 20008	CHIP JUMPER 0805		
4102	4822 051 20008	CHIP JUMPER 0805		
4103	4822 051 20008	CHIP JUMPER 0805		
4104	4822 051 20008	CHIP JUMPER 0805		
4105	4822 051 20008	CHIP JUMPER 0805		
4106	4822 051 20008	CHIP JUMPER 0805		
4108	4822 051 20008	CHIP JUMPER 0805		
4111	4822 051 20008	CHIP JUMPER 0805		
4120	4822 051 20008	CHIP JUMPER 0805		
4150	4822 051 10008	CHIP JUMPER1206		
4152	4822 051 10008	CHIP JUMPER1206		
4153	4822 051 10008	CHIP JUMPER1206		
4154	4822 051 10008	CHIP JUMPER1206		
4157	4822 051 10008	CHIP JUMPER1206		
4158	4822 051 10008	CHIP JUMPER1206		
4159	4822 051 10008	CHIP JUMPER1206		

CAPACITORS

2104	4822 122 33195	100pF	10%	50V
2106	4822 125 60101	10pF	VARIABLE	
2107	4822 121 51252	470nF	5%	63V
2125	4822 121 51381	560pF	1%	400V
2128	4822 124 41579	10µF	20%	50V
2129	4822 124 41584	100µF	20%	10V
2130	4822 126 11585	22nF+80/-20%		50V
2133	4822 124 40242	1µF	20%	63V
2135	4822 124 40746	0,22µF	20%	63V
2137	4822 124 40746	0,22µF	20%	63V
2138	4822 124 41576	2,2µF	20%	50V
2140	4822 121 51252	470nF	5%	63V
2144	4822 124 40242	1µF	20%	63V
2148	4822 126 11585	22nF+80/-20%		50V
2155	4822 125 60101	10pF	VARIABLE	

CHIP CAPACITORS

2101	5322 122 32531	100pF	5%	50V
2102	4822 122 33177	10nF	20%	50V
2103	5322 122 34123	1nF	10%	50V
2120	5322 122 32658	22pF	5%	50V
2126	5322 122 31863	330pF	5%	50V
2127	4822 122 32927	220nF	10%	63V
2131	4822 122 33325	470nF	20%	50V
2132	4822 122 33325	470nF	20%	50V
2134	5322 122 32654	22nF	10%	63V
2136	5322 122 32654	22nF	10%	63V
2141	4822 122 31947	100nF	20%	50V
2142	4822 122 31947	100nF	20%	50V
2143	4822 122 32927	220nF	10%	63V
2145	4822 122 33575	220pF	5%	50V
2146	4822 122 33575	220pF	5%	50V
2147	4822 122 33575	220pF	5%	50V
2149	5322 122 32654	22nF	10%	63V
2150	4822 122 31947	100nF	20%	50V
2152	5322 116 80853	560pF	5%	63V
2153	4822 122 32139	12pF	5%	63V
2159	5322 122 32659	33pF	5%	50V
2160	5322 122 32654	22nF	10%	63V
2165	4822 122 31947	100nF	20%	50V
2166	5322 122 34123	1nF	10%	50V

7B-4

ELECTRICAL PARTSLIST TUNER ECO5 BOARD

CHIP CAPACITORS

2167	4822 122 32139	12pF	5%	63V

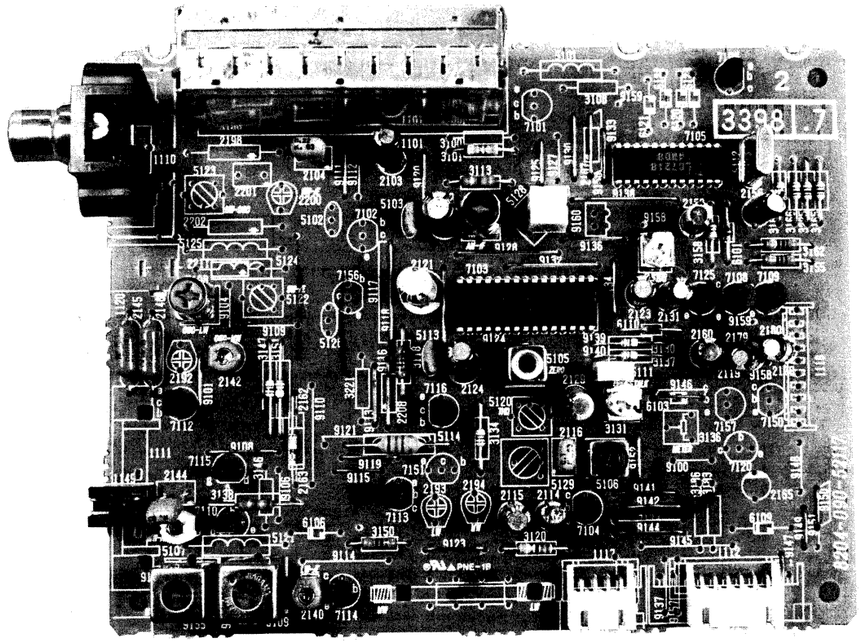

TUNER 94 BOARD

(for /02B Version Only)

TABLE OF CONTENTS

BLOCKDIAGRAM

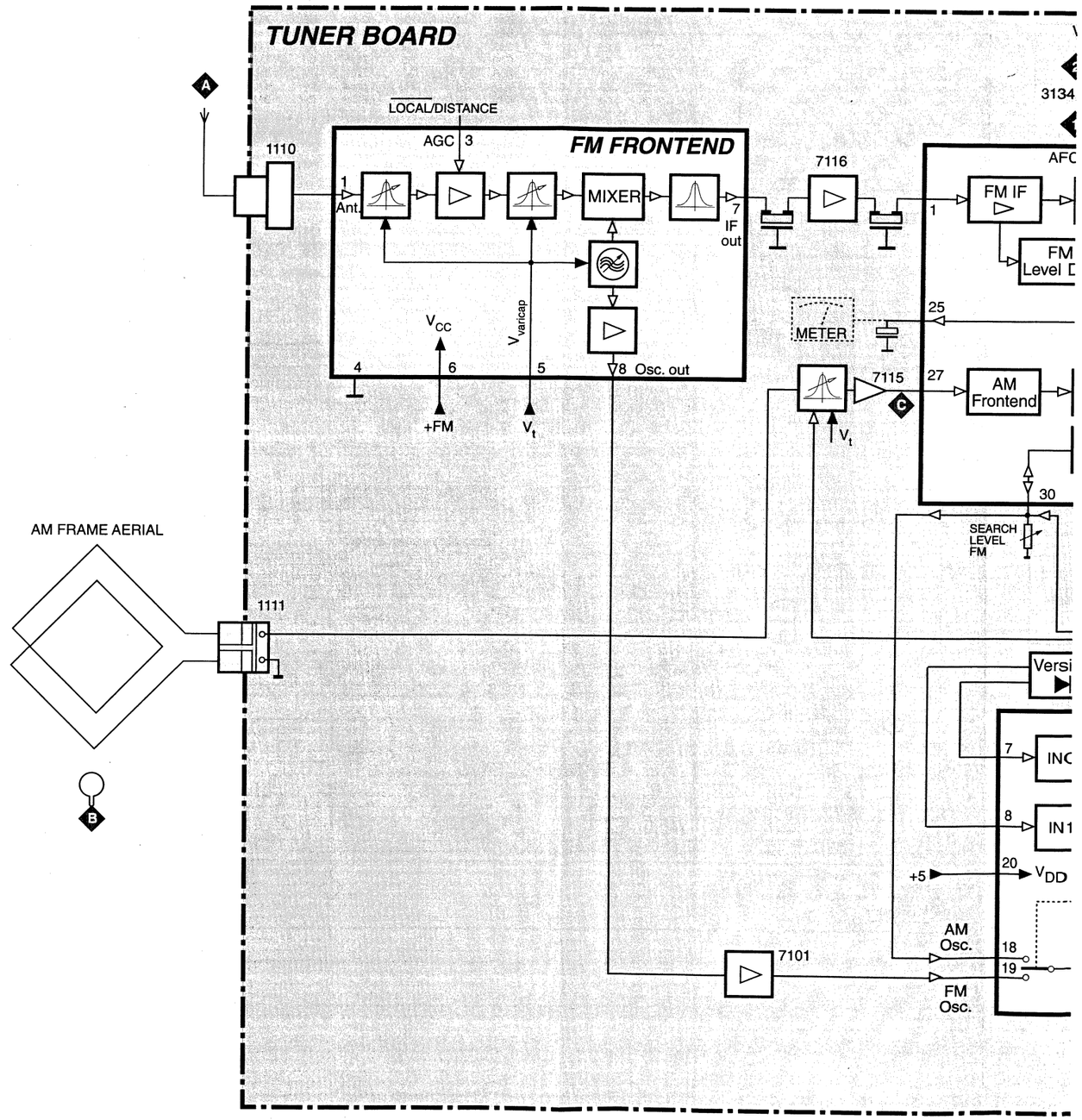

7C-1

BLOCKDIAGRAM

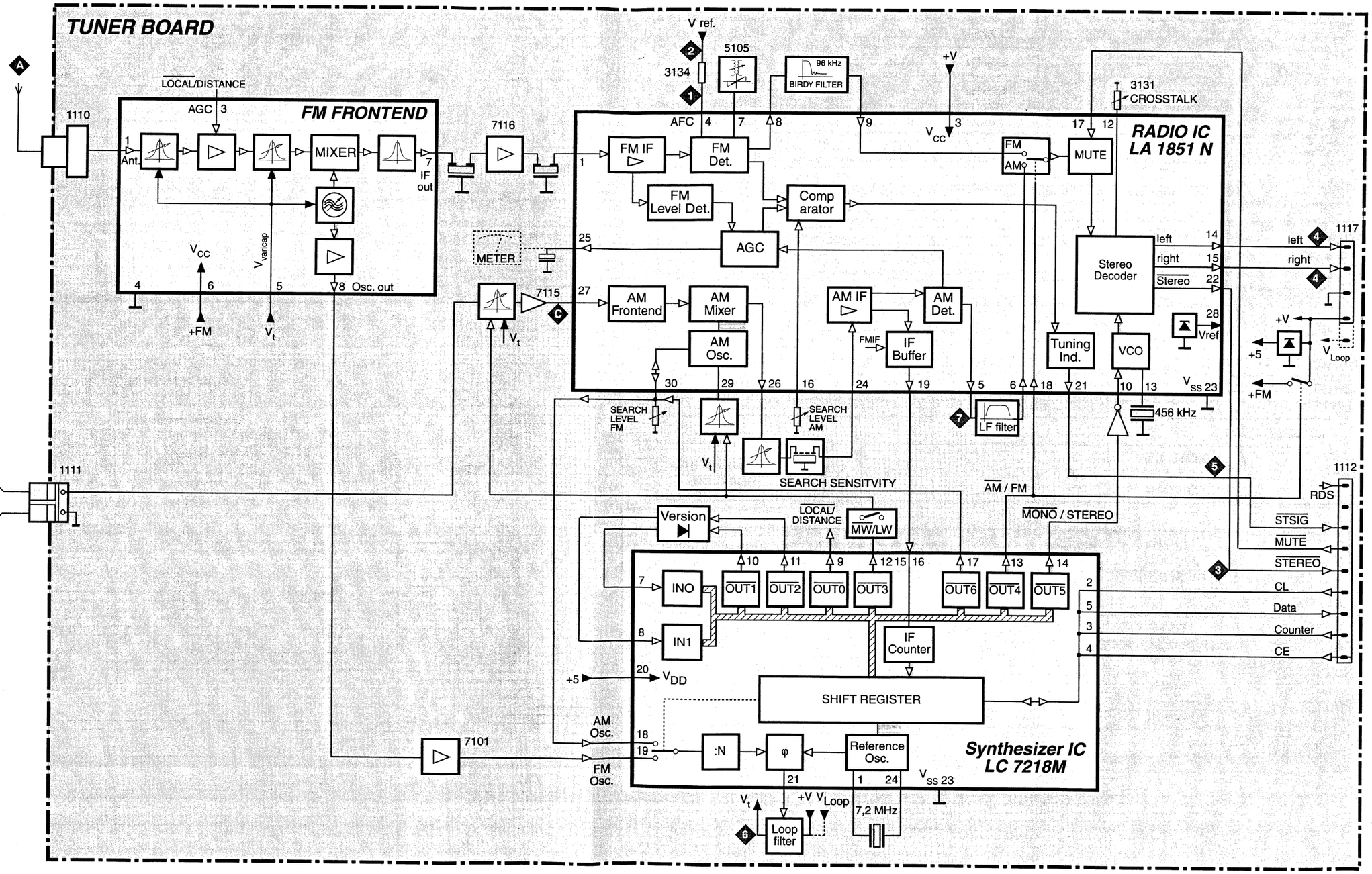

ADJUSTMENT TABLE

Waverange	Input frequency	Input	Tuned to	Adjust	Output	Scope/Voltmeter
VARICAP ALIGNMENT						
FM 87.5 - 108MHz (50kHz grid)			108MHz	check	6	7...9V
			87.5MHz	check		1.3...2V
LW 153 - 279kHz (3kHz grid)			279kHz	5108		8.5V ±0.1V
			153kHz	check		0.7...1.5V
MW 522 - 1611kHz (9kHz grid)			1611kHz	2142		8V ±0.1V
			522kHz	check		0.7...1.7V
FM IF						
FM	98MHz 1mV mod=1kHz Δf=75kHz	A	98MHz	5105	1 2	0V ±20mV
STEREO CROSSTALK						
FM	98MHz 1mV 90% L + 9% pilot	A	98MHz	check	3	low < 1V
				3131	4	right channel min.
SEARCH SENSITIVITY						
FM	98MHz 12µV mod=1kHz Δf=75kHz	A		3125	5	switches just from high to low
AM IF						
MW	1494kHz Δf=10kHz as low as possible	100nF 50R C		5104	7	symmetrical and max. height
AM RF						
LW	155kHz mod=1kHz, 30% AM 270kHz	B*	155kHz	5109	7	MAX
			270kHz	2140		
MW	558kHz mod=1kHz, 30% AM 1494kHz		558kHz	5107		MAX
			1494kHz	2141		

* Signal supplied via frame antenna

Repeat

7C-2

0004	A1	2115	G6	2141	G2	3101	B6	3147	F3	5103	D5	5113	E5	7110	G3	9113	F4	9128	D6	2101	A7	21
1101	A4	2116	F7	2142	E2	3113	C6	3150	H4	5104	C6	5114	F5	7112	F2	9115	G4	9130	B7	2102	B8	21
1110	B1	2119	E9	2144	G2	3118	E5	3151	F3	5105	E7	6101	C9	7113	G5	9116	F5	9132	D7	2105	B6	21
1112	H8	2120	E10	2145	E1	3120	H7	3155	D10	5106	F7	6110	E8	7114	I4	9117	D5	9133	C7	2108	C7	21
1112	H9	2121	D5	2146	E2	3125	D8	3158	D9	5107	H2	7103	D6	7115	F2	9119	G4	9134	D8	2109	F6	21
1117	H7	2123	D8	2152	D8	3130	E8	3162	D10	5108	D2	7104	H7	7116	F5	9120	C5	9136	D7	2110	D6	21
1149	G1	2124	E6	2156	C9	3131	F8	3165	C10	5109	H3	7105	C8	7125	D9	9122	E5	9138	C8	2111	C4	21
2103	B5	2129	F7	2160	E9	3134	F6	3166	C10	5110	C7	7106	A9	9101	F2	9123	H5	9141	G8	2112	E6	21
2104	B4	2131	E8	2162	F3	3137	E8	3167	C10	5111	F7	7108	D9	9108	F3	9124	E6	9142	G8	2113	C5	21
2114	G7	2140	H4	2210	C5	3138	G3	3225	C10	5112	B9	7109	D10	9111	C4	9125	C7	9144	G8	2117	E5	21

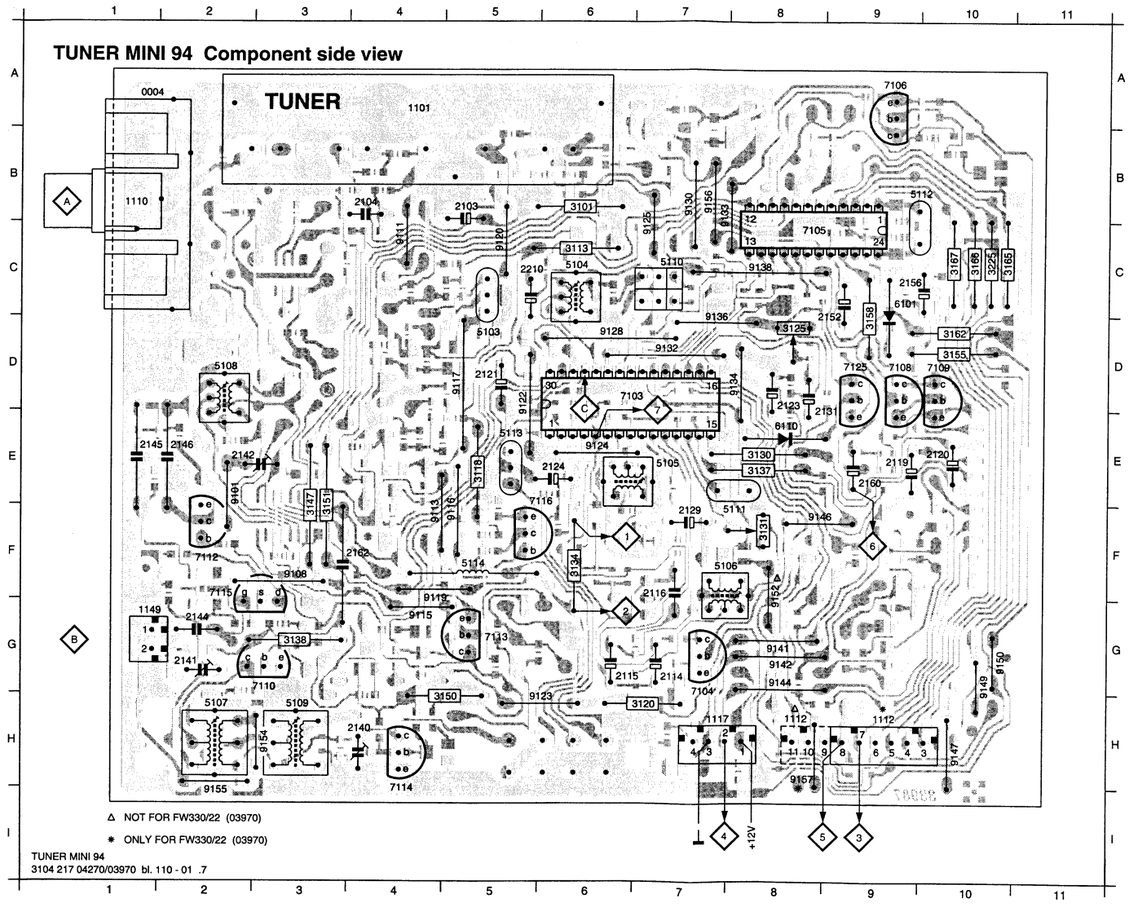

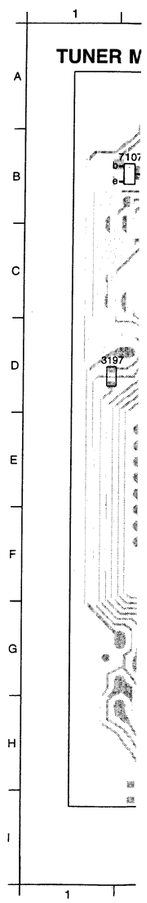

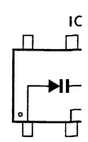

7C-2

0004	A1	2115	G6	2141	G2	3101	B6	3147	F3	5103	D5	5113	E5	7110	G3	9113	F4	9128	D6
1101	A4	2116	F7	2142	E2	3113	C6	3150	H4	5104	C6	5114	F5	7112	F2	9115	G4	9130	B7
1110	B1	2119	E9	2144	G2	3118	E5	3151	F3	5105	E7	6101	C9	7113	G5	9116	F5	9132	D7
1112	H8	2120	E10	2145	E1	3120	H7	3155	D10	5106	F7	6110	E8	7114	I4	9117	D5	9133	C7
1112	H9	2121	D5	2146	E2	3125	D8	3158	D9	5107	H2	7103	D6	7115	F2	9119	G4	9134	D8
1117	H7	2123	D8	2152	D8	3130	E8	3162	D10	5108	D2	7104	H7	7116	F5	9120	C5	9136	D7
1149	G1	2124	E6	2156	C9	3131	F8	3165	C10	5109	H3	7105	C8	7125	D9	9122	E5	9138	C8
2103	B5	2129	F7	2160	E9	3134	F6	3166	C10	5110	C7	7106	A9	9101	F2	9123	H5	9141	G8
2104	B4	2131	E8	2162	F3	3137	E8	3167	C10	5111	F7	7108	D9	9108	F3	9124	E6	9142	G8
2114	G7	2140	H4	2210	C5	3138	G3	3225	C10	5112	B9	7109	D10	9111	C4	9125	C7	9144	G8

2101	A7	2118	D4	2149	C4	2196	E10	3116	E7	3132	E5	3149	F10	3171	B2	3202	F9	7107	B1
2102	B8	2125	D6	2150	D5	2215	G3	3117	F6	3135	D6	3152	C6	3172	B2	3223	E4	7111	H7
2105	B6	2127	D5	2151	C3	2221	F3	3121	C5	3139	D3	3156	D2	3173	A2	3229	H3	7158	F4
2108	C7	2128	F5	2153	B3	3102	B6	3122	E5	3140	G9	3157	E2	3190	D3	3233	B8		
2109	F6	2132	G5	2154	C2	3104	B8	3123	H5	3141	H8	3159	B3	3194	G5	3235	G4		
2110	D6	2133	H3	2155	B2	3105	C8	3124	G5	3142	H7	3160	B3	3196	C4	3238	G3		
2111	C4	2135	E5	2158	E3	3106	B7	3126	D3	3143	G9	3163	A2	3197	D1	3239	F6		
2112	E6	2143	H8	2159	E2	3107	B5	3127	E3	3144	F10	3164	C4	3198	D3	3240	H7		
2113	C5	2147	C3	2161	G10	3114	F7	3128	E2	3145	G9	3168	D4	3199	D5	3241	G9		
2117	E5	2148	C4	2188	E5	3115	F7	3129	D4	3148	E10	3170	A3	3200	E7	6102	F10		

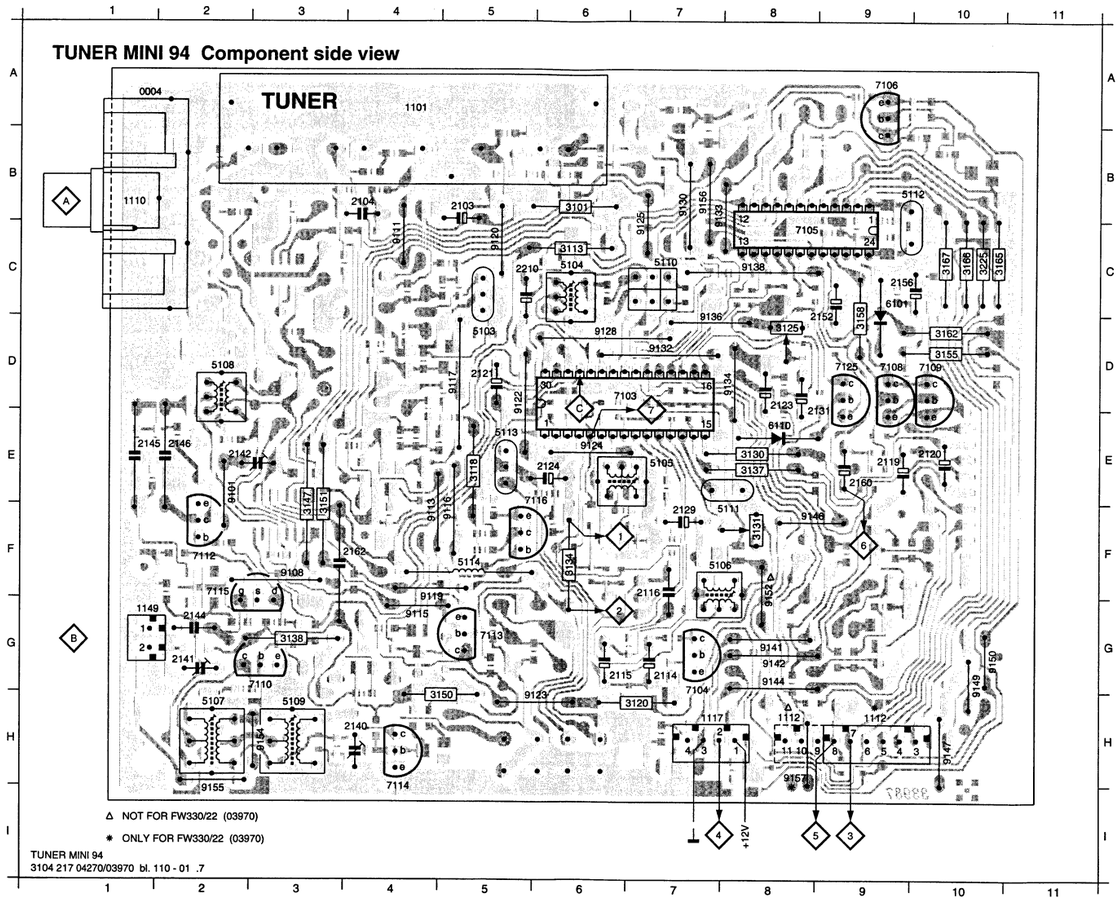

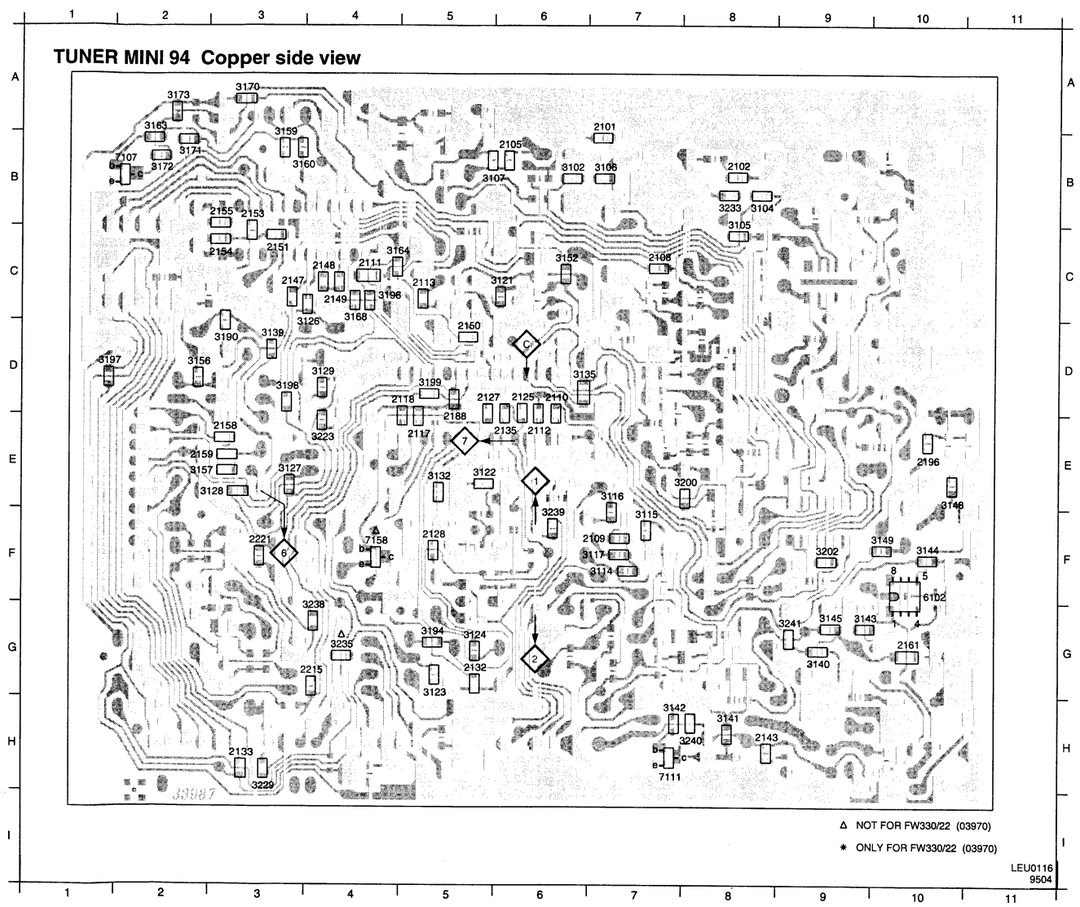

IC 6102

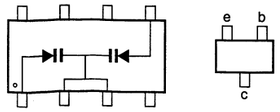

7C-3

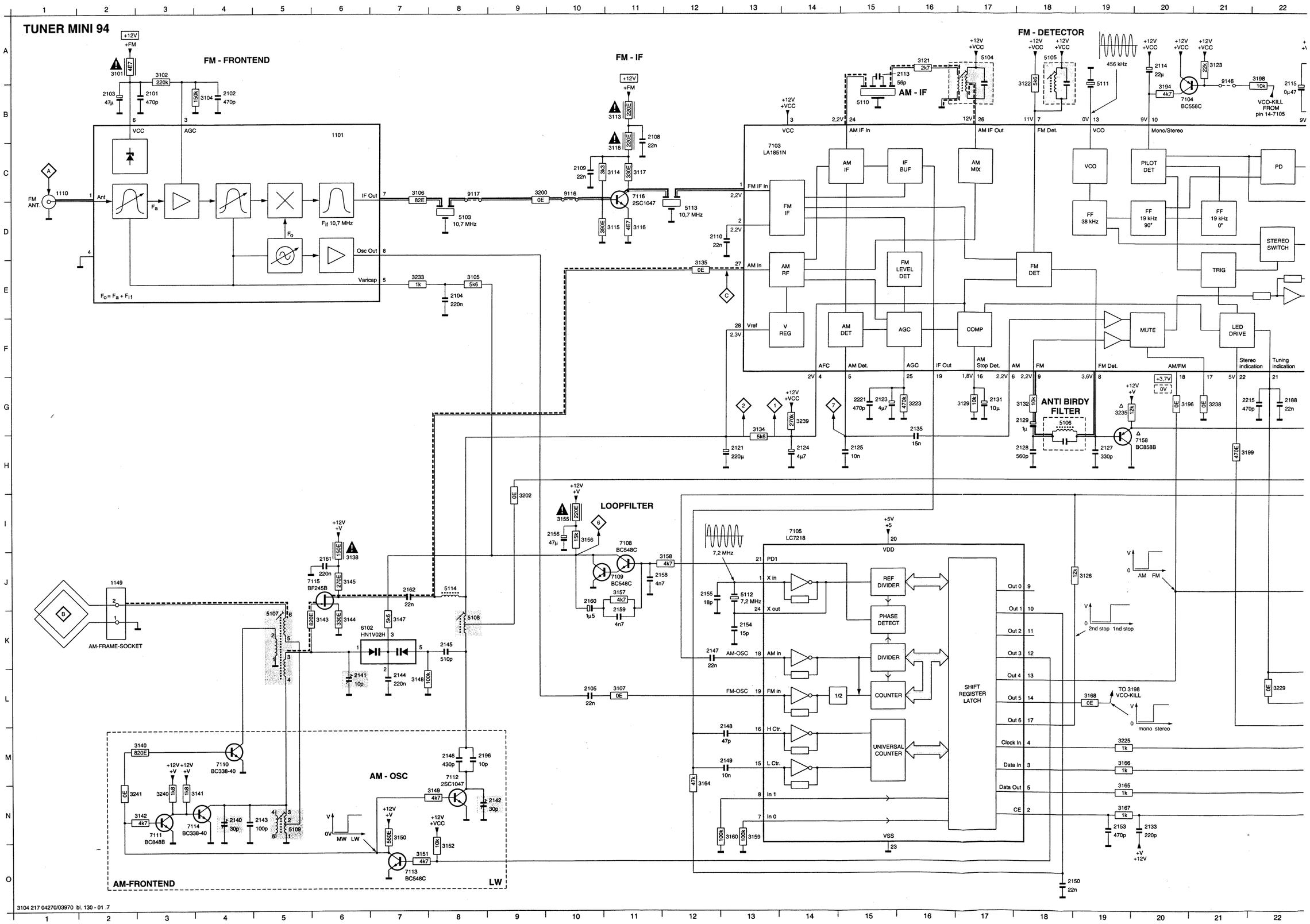
TUNER MINI 94
FM - FRONTEND
FM - IF
FM - DETECTOR
AM - IF
LOOPFILTER
AM - OSC
AM-FRONTEND
LW
AM-FRAME-SOCKET
ANTI BIRDY FILTER
7103 LA1851N
7105 LC7218
7116 2SC1047
7112 2SC1047
7104 BC558C
7158 BC858B
7108 BC548C
7109 BC548C
7115 BF245B
6102 HN1V02H
7110 BC338-40
7111 BC848B
7114 BC338-40
7113 BC548C
VCO-KILL FROM pin 14-7105
TO 3198 VCO-KILL
AM FM
2nd stop 1nd stop
mono stereo
3104 217 04270/03970 bl. 130 - 01 .7

7C-3

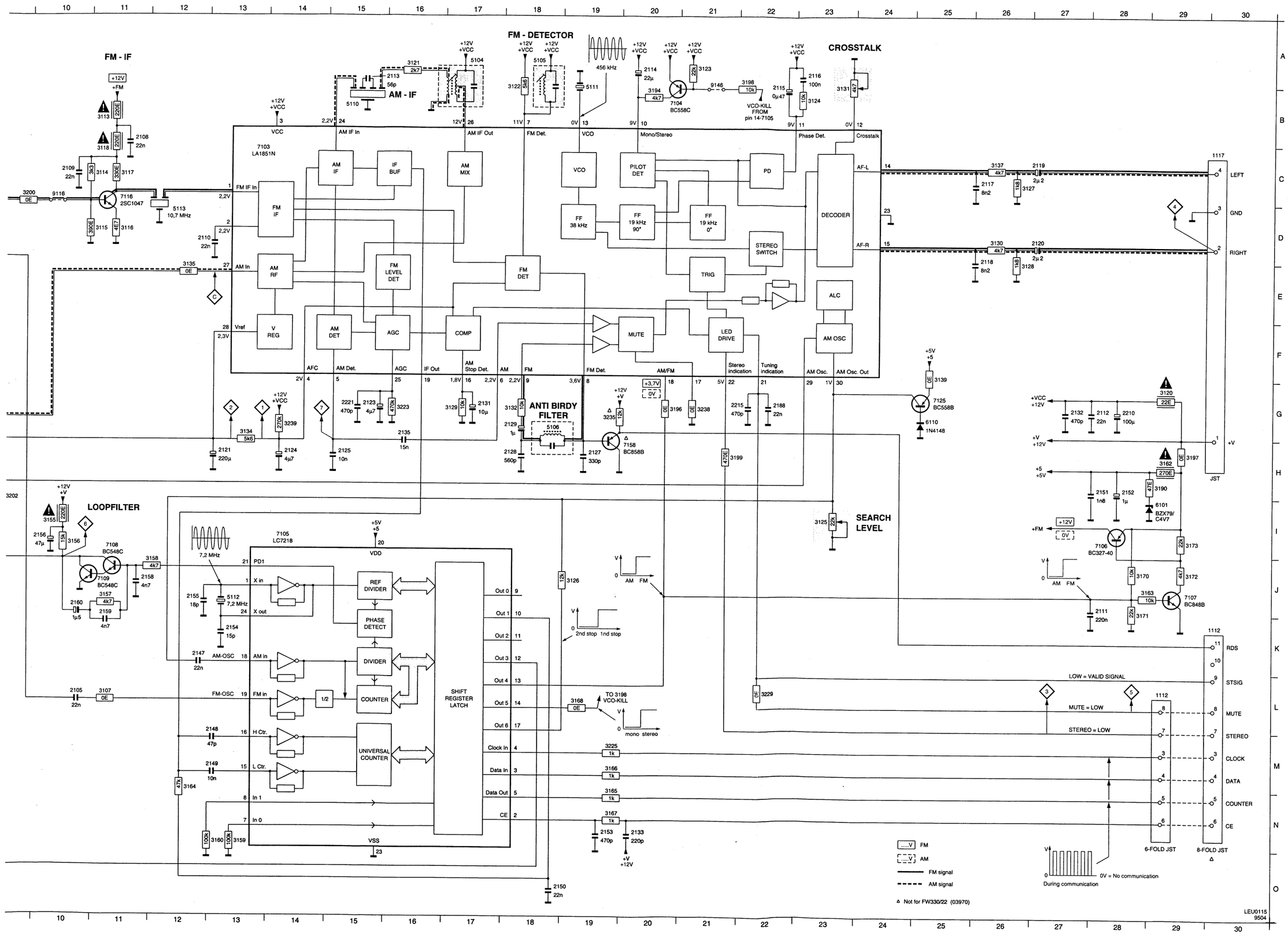

1101	B6	3196	G20
1110	C1	3197	H29
1112	L29	3198	A22
1112	K30	3199	H21
1117	C30	3200	C9
1149	J2	3202	I9
2101	B3	3223	G16
2102	B4	3225	M19
2103	B2	3229	L22
2104	E8	3233	E7
2105	L10	3235	G19
2108	B11	3238	G21
2109	C10	3239	G14
2110	D12	3240	N3
2111	J28	3241	N2
2112	G28	5103	D8
2113	A15	5104	A17
2114	A20	5105	A18
2115	B22	5106	G18
2116	A23	5107	K5
2117	C26	5108	K8
2118	D26	5109	N5
2119	C26	5110	B15
2120	D26	5111	B19
2121	H13	5112	J13
2123	G15	5113	D12
2124	H14	5114	J8
2125	H15	6101	I29
2127	H19	6102	K6
2128	H18	6110	G25
2129	G18	7103	C13
2131	G17	7104	B20
2132	G27	7105	I14
2133	N20	7106	I28
2135	G16	7107	J29
2140	N4	7108	I11
2141	L6	7109	J11
2142	N9	7110	M4
2143	N5	7111	N3
2144	L7	7112	M8
2145	K8	7113	O7
2146	M8	7114	N3
2147	K12	7115	J5
2148	M12	7116	C11
2149	M12	7125	G25
2150	O18	7158	H20
2151	H28	9116	C10
2152	H28	9117	C8
2153	N19	9146	B21
2154	K13		
2155	J12		
2156	I10		
2158	J11		
2159	K11		
2160	J10		
2161	J6		
2162	J7		
2188	G22		
2196	M8		
2210	G28		
2215	G21		
2221	G15		
3101	A2		
3102	A3		
3104	B4		
3105	E8		
3106	C7		
3107	L11		
3113	B11		
3114	C11		
3115	D11		
3116	D11		
3117	C11		
3118	C11		
3120	G29		
3121	A16		
3122	B18		
3123	A21		
3124	B23		
3125	I23		
3126	J19		
3127	C26		
3128	E26		
3129	G17		
3130	D26		
3131	B23		
3132	G18		
3134	G13		
3135	E12		
3137	C26		
3138	J6		
3139	G25		
3140	M2		
3141	N3		
3142	N2		
3143	K6		
3144	K6		
3145	J6		
3147	K7		
3148	L7		
3149	N7		
3150	N7		
3151	O7		
3152	O8		
3155	I10		
3156	I10		
3157	J11		
3158	J11		
3159	N13		
3160	N13		
3162	H29		
3163	J28		
3164	N12		
3165	N19		
3166	M19		
3167	N19		
3168	L19		
3170	J28		
3171	K28		
3172	J29		
3173	I29		
3190	H29		
3194	B20		

Remarks

ELECTRICAL PARTSLIST TUNER 94 BOARD

MISCELLANEOUS

1101	4822 210 10492	FRONTEND ASSY /02/08
1110	4822 267 10283	SOCKET COAX IEC 75R

DIODES

6101	4822 130 34174	BZX79-B4V7
6102	4822 130 83075	HN1V02H
6110	4822 130 30621	1N4148

TRANSISTORS

7104	5322 130 60068	BC558C
7106	4822 130 41327	BC327-40
7107	5322 130 41982	BC848 (CHIP)
7108	4822 130 44196	BC548C
7109	4822 130 44196	BC548C
7110	5322 130 44779	BC338-40
7111	5322 130 41982	BC848 (CHIP)
7112	4822 130 60163	2SC1047
7113	4822 130 44196	BC548C
7114	5322 130 44779	BC338-40
7115	4822 130 41024	BF245B
7116	4822 130 60163	2SC1047
7125	4822 130 44197	BC558B
7158	5322 130 41983	BC858B(CHIP)

INTEGRATED CIRCUITS

7103	4822 209 31001	LA1851N
7105	4822 209 30178	LC7218

COILS

5103	4822 242 81249	CER. FILTER 10,7MHz
5104	4822 157 63029	AM IF COIL
5105	4822 157 63904	Q-DETECION COIL
5106	4822 157 71661	ANTI-BIRDY FILTER
5107	4822 157 71094	ANT. COIL MW, 3-BAND
5108	4822 157 63912	OSC.COIL AM 3-BAND
5109	4822 157 71093	ANT. COIL LW
5110	4822 242 71878	CERAM.FILTER 450kHz
5111	4822 242 81248	CERAM. RES. 19kHz
5112	4822 242 72976	CER.RESONATOR 7,2MHz
5113	4822 242 81249	CER. FILTER 10,7MHz
5114	4822 157 51503	560µH

RESISTORS

3101	4822 052 10478	4R7	5%	NFR
3113	4822 053 10221	220R	5%	1W
3118	4822 050 22201	220R	2%	0,25W
3120	4822 052 10229	22R	5%	0,33W
3125	4822 100 11213	22k	30%	POT.
3130	4822 116 52283	4k7	5%	0,5W
3131	4822 100 11319	4k7		trimpot.
3134	4822 116 52289	5k6	5%	0,16W
3137	4822 116 52283	4k7	5%	0,5W
3138	4822 116 83922	150R	5%	1W
3147	4822 116 52289	5k6	5%	0,16W
3150	4822 050 25601	560R	1%	0,6W
3151	4822 116 52283	4k7	5%	0,5W
3155	4822 050 22201	220R	2%	0,25W
3158	4822 116 52283	4k7	5%	0,5W

RESISTORS

3162	4822 050 22701	270R	1%	0,6W
3165	4822 050 11002	1k	5%	0,2W
3166	4822 050 11002	1k	5%	0,2W
3167	4822 050 11002	1k	5%	0,2W
3225	4822 050 11002	1k	5%	0,2W

CHIP RESISTORS

3102	4822 051 20224	220k	5%	0,1W
3104	4822 051 20154	150k	5%	0,1W
3105	4822 051 20562	5k6	5%	0,1W
3106	4822 051 20829	82R	5%	0,1W
3107	4822 051 20008	CHIP JUMPER 0805		
3114	4822 051 20332	3k3	5%	0,1W
3115	4822 051 20391	390R	5%	0,1W
3116	4822 051 20478	4R7	5%	0,1W
3117	4822 051 20331	330R	5%	0,1W
3121	4822 051 20272	2k7	5%	0,1W
3122	4822 051 20562	5k6	5%	0,1W
3123	4822 051 20223	22k	5%	0,1W
3124	4822 117 10833	10k	1%	0,1W
3126	4822 051 20123	12k	2%	0,1W
3127	4822 051 20182	1k8	5%	0,1W
3128	4822 051 20182	1k8	5%	0,1W
3129	4822 117 10833	10k	1%	0,1W
3132	4822 117 10833	10k	1%	0,1W
3133	4822 051 20008	CHIP JUMPER 0805		
3135	4822 051 10008	CHIP JUMPER1206		
3139	4822 051 20008	CHIP JUMPER 0805		
3140	4822 051 20821	820R	5%	0,1W
3141	4822 051 20182	1k8	5%	0,1W
3142	4822 051 20472	4k7	5%	0,1W
3143	4822 051 20821	820R	5%	0,1W
3144	4822 051 20331	330R	5%	0,1W
3145	4822 051 20271	270R	5%	0,1W
3148	4822 051 20104	100k	5%	0,1W
3149	4822 051 20472	4k7	5%	0,1W
3152	4822 117 10833	10k	1%	0,1W
3156	4822 051 20153	15k	5%	0,1W
3157	4822 051 20472	4k7	5%	0,1W
3159	4822 051 20104	100k	5%	0,1W
3160	4822 051 20104	100k	5%	0,1W
3163	4822 117 10833	10k	1%	0,1W
3164	4822 051 10473	47k	2%	0,25W
3164	4822 051 20473	47k	5%	0,1W
3168	4822 051 20008	CHIP JUMPER 0805		
3170	4822 117 10833	10k	1%	0,1W
3171	4822 051 20223	22k	5%	0,1W
3172	4822 051 20472	4k7	5%	0,1W
3173	4822 051 20223	22k	5%	0,1W
3190	4822 051 20479	47R	5%	0,1W
3194	4822 051 20472	4k7	5%	0,1W
3196	4822 051 20008	CHIP JUMPER 0805		
3197	4822 051 20008	CHIP JUMPER 0805		
3198	4822 117 10833	10k	1%	0,1W
3199	4822 051 20471	470R	5%	0,1W
3200	4822 051 20008	CHIP JUMPER 0805		
3202	4822 051 20008	CHIP JUMPER 0805		
3223	4822 051 20474	470k	5%	0,1W
3229	4822 051 20008	CHIP JUMPER 0805		
3233	4822 051 10102	1k	2%	0,25W
3235	4822 051 20123	12k	2%	0,1W

ELECTRICAL

CHIP RESISTC

3236	4822 0
3238	4822 0
3239	4822 0
3240	4822 0
3241	4822 0

CAPACITORS

2103	4822 1
2104	4822 1
2114	5322 1
2115	4822 1
2116	5322 1
2119	4822 1
2120	4822 1
2121	4822 1
2123	4822 1
2124	4822 1
2129	4822 1
2131	4822 1
2140	4822 1
2141	4822 1
2142	4822 1
2144	4822 1
2145	4822 1
2146	4822 1
2152	4822 1
2156	4822 1
2160	4822 1
2162	4822 1
2210	4822 1

CHIP CAPACI

2101	5322 1
2102	5322 1
2105	5322 1
2108	5322 1
2109	5322 1
2110	5322 1
2111	4822 1
2112	5322 1
2113	5322 1
2117	4822 1
2118	4822 1
2125	4822 1
2126	4822 1
2127	5322 1
2128	5322 1
2132	5322 1
2133	5322 1
2135	4822 1
2143	5322 1
2147	5322 1
2148	5322 1
2149	4822 1
2150	5322 1
2151	5322 1
2151	4822 1
2153	5322 1
2154	5322 1
2155	5322 1
2158	5322 1
2159	5322 1

ELECTRICAL PARTSLIST TUNER 94 BOARD

MISCELLANEOUS

1101	4822 210 10492	FRONTEND ASSY /02/08
1110	4822 267 10283	SOCKET COAX IEC 75R

DIODES

6101	4822 130 34174	BZX79-B4V7
6102	4822 130 83075	HN1V02H
6110	4822 130 30621	1N4148

TRANSISTORS

7104	5322 130 60068	BC558C
7106	4822 130 41327	BC327-40
7107	5322 130 41982	BC848 (CHIP)
7108	4822 130 44196	BC548C
7109	4822 130 44196	BC548C
7110	5322 130 44779	BC338-40
7111	5322 130 41982	BC848 (CHIP)
7112	4822 130 60163	2SC1047
7113	4822 130 44196	BC548C
7114	5322 130 44779	BC338-40
7115	4822 130 41024	BF245B
7116	4822 130 60163	2SC1047
7125	4822 130 44197	BC558B
7158	5322 130 41983	BC858B(CHIP)

INTEGRATED CIRCUITS

7103	4822 209 31001	LA1851N
7105	4822 209 30178	LC7218

COILS

5103	4822 242 81249	CER. FILTER 10,7MHz
5104	4822 157 63029	AM IF COIL
5105	4822 157 63904	Q-DETECION COIL
5106	4822 157 71661	ANTI-BIRDY FILTER
5107	4822 157 71094	ANT. COIL MW, 3-BAND
5108	4822 157 63912	OSC.COIL AM 3-BAND
5109	4822 157 71093	ANT. COIL LW
5110	4822 242 71878	CERAM.FILTER 450kHz
5111	4822 242 81248	CERAM. RES. 19kHz
5112	4822 242 72976	CER.RESONATOR 7,2MHz
5113	4822 242 81249	CER. FILTER 10,7MHz
5114	4822 157 51503	560µH

RESISTORS

3101	4822 052 10478	4R7	5%	NFR
3113	4822 053 10221	220R	5%	1W
3118	4822 050 22201	220R	2%	0,25W
3120	4822 052 10229	22R	5%	0,33W
3125	4822 100 11213	22k	30%	POT.
3130	4822 116 52283	4k7	5%	0,5W
3131	4822 100 11319	4k7		trimpot.
3134	4822 116 52289	5k6	5%	0,16W
3137	4822 116 52283	4k7	5%	0,5W
3138	4822 116 83922	150R	5%	1W
3147	4822 116 52289	5k6	5%	0,16W
3150	4822 050 25601	560R	1%	0,6W
3151	4822 116 52283	4k7	5%	0,5W
3155	4822 050 22201	220R	2%	0,25W
3158	4822 116 52283	4k7	5%	0,5W

RESISTORS

3162	4822 050 22701	270R	1%	0,6W
3165	4822 050 11002	1k	5%	0,2W
3166	4822 050 11002	1k	5%	0,2W
3167	4822 050 11002	1k	5%	0,2W
3225	4822 050 11002	1k	5%	0,2W

CHIP RESISTORS

3102	4822 051 20224	220k	5%	0,1W
3104	4822 051 20154	150k	5%	0,1W
3105	4822 051 20562	5k6	5%	0,1W
3106	4822 051 20829	82R	5%	0,1W
3107	4822 051 20008	CHIP JUMPER 0805		
3114	4822 051 20332	3k3	5%	0,1W
3115	4822 051 20391	390R	5%	0,1W
3116	4822 051 20478	4R7	5%	0,1W
3117	4822 051 20331	330R	5%	0,1W
3121	4822 051 20272	2k7	5%	0,1W
3122	4822 051 20562	5k6	5%	0,1W
3123	4822 051 20223	22k	5%	0,1W
3124	4822 117 10833	10k	1%	0,1W
3126	4822 051 20123	12k	2%	0,1W
3127	4822 051 20182	1k8	5%	0,1W
3128	4822 051 20182	1k8	5%	0,1W
3129	4822 117 10833	10k	1%	0,1W
3132	4822 117 10833	10k	1%	0,1W
3133	4822 051 20008	CHIP JUMPER 0805		
3135	4822 051 10008	CHIP JUMPER1206		
3139	4822 051 20008	CHIP JUMPER 0805		
3140	4822 051 20821	820R	5%	0,1W
3141	4822 051 20182	1k8	5%	0,1W
3142	4822 051 20472	4k7	5%	0,1W
3143	4822 051 20821	820R	5%	0,1W
3144	4822 051 20331	330R	5%	0,1W
3145	4822 051 20271	270R	5%	0,1W
3148	4822 051 20104	100k	5%	0,1W
3149	4822 051 20472	4k7	5%	0,1W
3152	4822 117 10833	10k	1%	0,1W
3156	4822 051 20153	15k	5%	0,1W
3157	4822 051 20472	4k7	5%	0,1W
3159	4822 051 20104	100k	5%	0,1W
3160	4822 051 20104	100k	5%	0,1W
3163	4822 117 10833	10k	1%	0,1W
3164	4822 051 10473	47k	2%	0,25W
3164	4822 051 20473	47k	5%	0,1W
3168	4822 051 20008	CHIP JUMPER 0805		
3170	4822 117 10833	10k	1%	0,1W
3171	4822 051 20223	22k	5%	0,1W
3172	4822 051 20472	4k7	5%	0,1W
3173	4822 051 20223	22k	5%	0,1W
3190	4822 051 20479	47R	5%	0,1W
3194	4822 051 20472	4k7	5%	0,1W
3196	4822 051 20008	CHIP JUMPER 0805		
3197	4822 051 20008	CHIP JUMPER 0805		
3198	4822 117 10833	10k	1%	0,1W
3199	4822 051 20471	470R	5%	0,1W
3200	4822 051 20008	CHIP JUMPER 0805		
3202	4822 051 20008	CHIP JUMPER 0805		
3223	4822 051 20474	470k	5%	0,1W
3229	4822 051 20008	CHIP JUMPER 0805		
3233	4822 051 10102	1k	2%	0,25W
3235	4822 051 20123	12k	2%	0,1W

7C-4

ELECTRICAL PARTSLIST TUNER 94 BOARD

CHIP RESISTORS

3236	4822 051 20008	CHIP JUMPER 0805		
3238	4822 051 20008	CHIP JUMPER 0805		
3239	4822 051 20274	270k	5%	0,1W
3240	4822 051 20182	1k8	5%	0,1W
3241	4822 051 20008	CHIP JUMPER 0805		

CAPACITORS

2103	4822 124 40433	47µF	20%	25V
2104	4822 121 42408	220nF	5%	63V
2114	5322 124 41431	22µF	20%	25V
2115	4822 124 40239	0,47µF	20%	63V
2116	5322 121 42386	100nF	5%	63V
2119	4822 124 40244	2,2µF	20%	63V
2120	4822 124 40244	2,2µF	20%	63V
2121	4822 124 40196	220µF	20%	16V
2123	4822 124 40246	4,7µF	20%	63V
2124	4822 124 40246	4,7µF	20%	63V
2129	4822 124 40242	1µF	20%	63V
2131	4822 124 40248	10µF	20%	63V
2140	4822 125 60102	30pF		VARIABLE
2141	4822 125 60101	10pF		VARIABLE
2142	4822 125 60102	30pF		VARIABLE
2144	4822 121 42408	220nF	5%	63V
2145	4822 121 51263	510pF	1%	400V
2146	4822 121 70082	430pF	1%	400V
2152	4822 124 40242	1µF	20%	63V
2156	4822 124 40433	47µF	20%	25V
2160	4822 124 41631	1,5µF	20%	50V
2162	4822 126 11585	22nF+80/-20%		50V
2210	4822 124 41643	100µF	20%	16V

CHIP CAPACITORS

2101	5322 122 34099	470pF	10%	63V
2102	5322 122 32268	470pF	10%	50V
2105	5322 122 32654	22nF	10%	63V
2108	5322 122 32654	22nF	10%	63V
2109	5322 122 32654	22nF	10%	63V
2110	5322 122 32654	22nF	10%	63V
2111	4822 122 32927	220nF	10%	63V
2112	5322 122 32654	22nF	10%	63V
2113	5322 122 32661	56pF	5%	50V
2117	4822 122 33336	8,2nF	10%	50V
2118	4822 122 33336	8,2nF	10%	50V
2125	4822 122 33177	10nF	20%	50V
2126	4822 122 31782	15nF	10%	50V
2127	5322 122 31863	330pF	5%	50V
2128	5322 116 80853	560pF	5%	63V
2132	5322 122 32268	470pF	10%	50V
2133	5322 126 10794	220pF	10%	
2135	4822 122 33128	15nF	10%	63V
2143	5322 122 32531	100pF	5%	50V
2147	5322 122 32654	22nF	10%	63V
2148	5322 122 32452	47pF	5%	50V
2149	4822 122 33177	10nF	20%	50V
2150	5322 122 32654	22nF	10%	63V
2151	5322 122 34099	470pF	10%	63V
2151	4822 122 33219	1,8nF	10%	50V
2153	5322 122 34099	470pF	10%	63V
2154	5322 122 32481	15pF	5%	50V
2155	5322 122 32965	18pF	5%	50V
2158	5322 126 10223	4,7nF	10%	63V
2159	5322 126 10223	4,7nF	10%	63V

CHIP CAPACITORS

2161	4822 122 32927	220nF	10%	63V
2188	5322 122 32654	22nF	10%	63V
2196	5322 122 32448	10pF	5%	50V
2215	5322 122 32268	470pF	10%	50V
2216	5322 122 32268	470pF	10%	50V
2221	5322 122 32268	470pF	10%	50V

KARAOKE CIRCUIT I

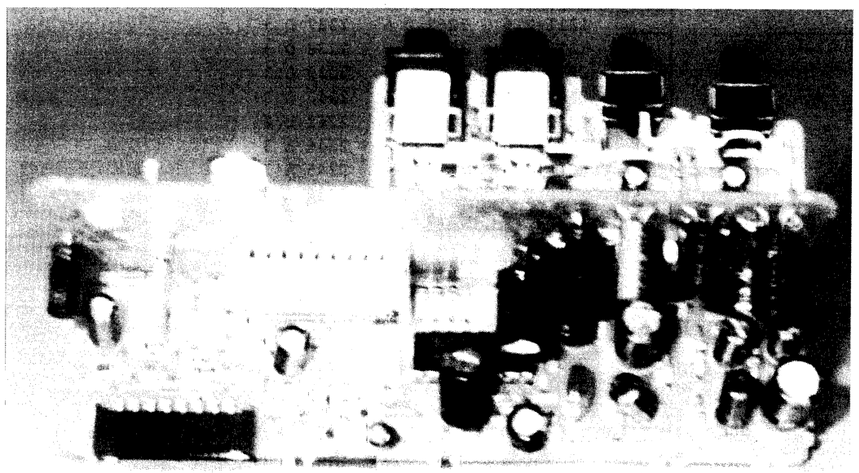

KARAOKE BOARD

(for /01B Version Only)

TABLE OF CONTENTS

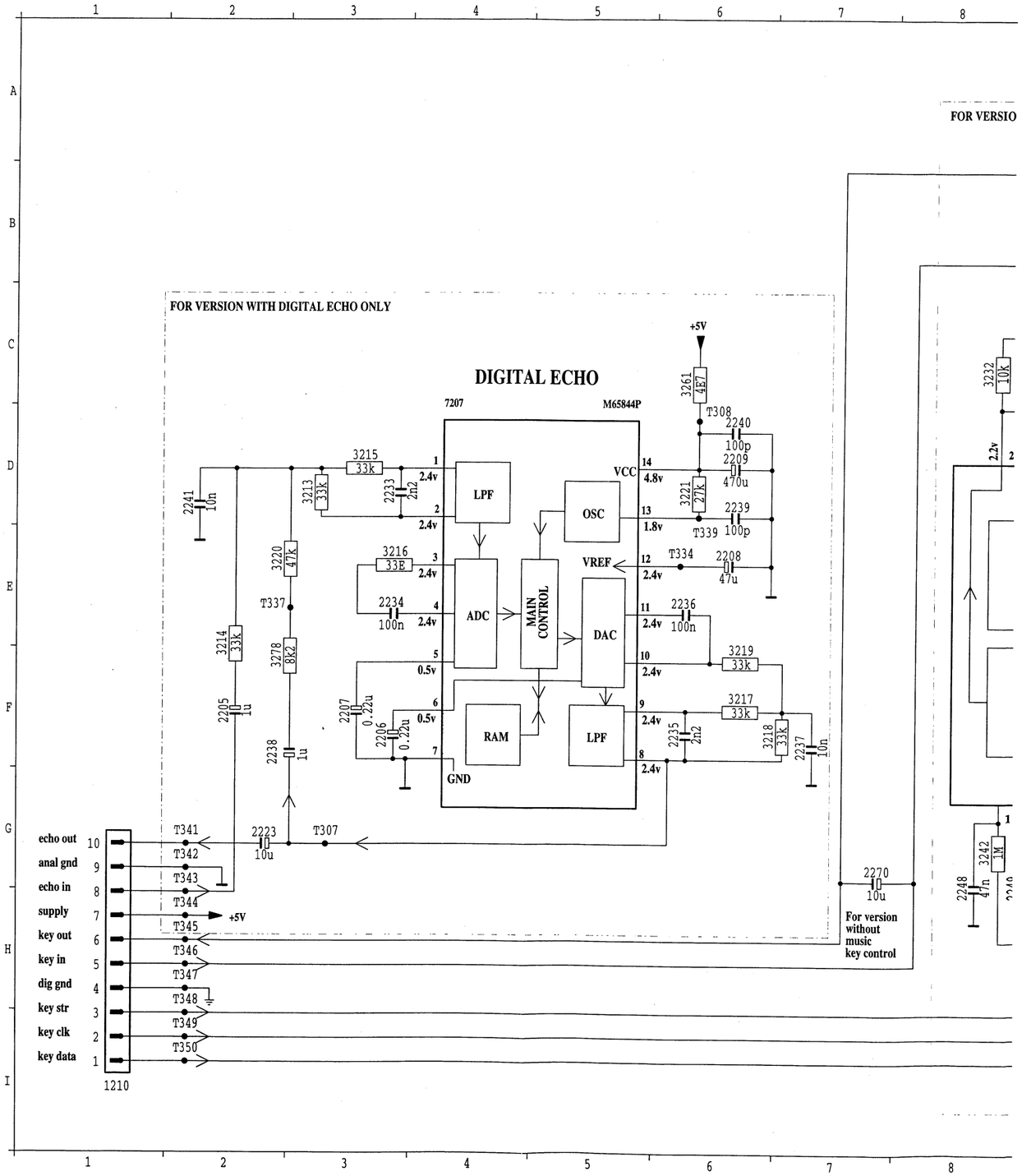

8 - 1

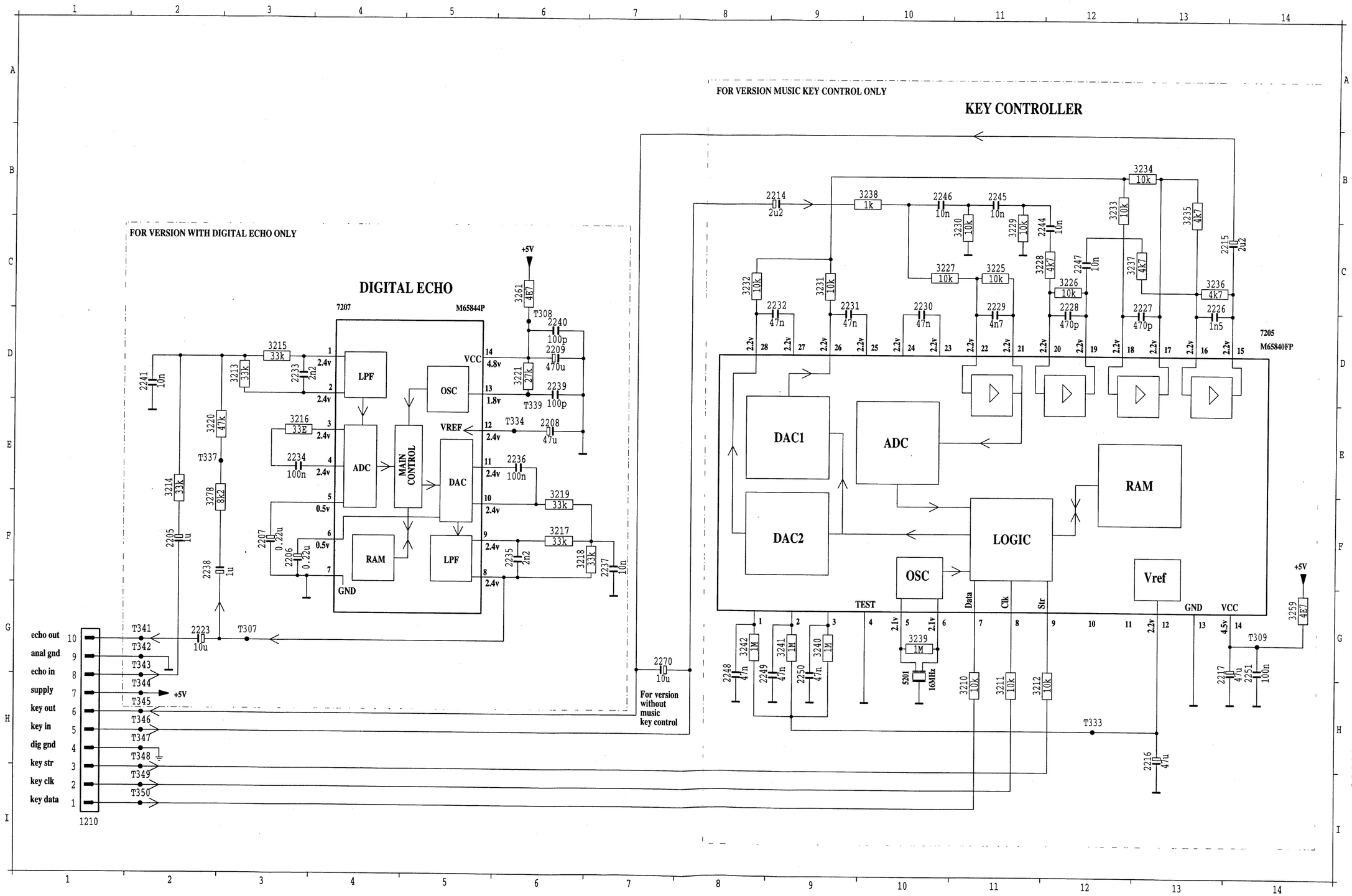

1210	I	1
2205	F	2
2206	F	3
2207	F	3
2208	E	6
2209	D	6
2214	B10	
2215	C14	
2216	H13	
2217	G14	
2223	G	2
2226	D13	
2227	D13	
2228	D12	
2229	D11	
2230	D10	
2231	D	9
2232	D	9
2233	D	3
2234	E	3
2235	F	6
2236	E	6
2237	F	7
2238	F	2
2239	D	6
2240	D	6
2241	D	2
2244	C12	
2245	B11	
2246	B10	
2247	C12	
2248	G	8
2249	G	9
2250	G	9
2251	G14	
2270	H	7
3210	H11	
3211	H11	
3212	H11	
3213	D	3
3214	E	2
3215	D	3
3216	E	3
3217	F	6
3218	F	6
3219	F	6
3220	E	2
3221	D	6
3225	C11	
3226	C12	
3227	C10	
3228	C11	
3229	C11	
3230	C11	
3231	C	9
3232	C	8
3233	B12	
3234	B13	
3235	B13	
3236	C13	
3237	C12	
3238	B	9
3239	G10	
3240	G	9
3241	G	9
3242	G	8
3259	G14	
3261	C	6
3278	F	2
5201	G10	
7205	D14	
7207	D	4
T307	G	3
T308	D	6
T309	G14	
T333	H12	
T334	E	6
T337	E	2
T339	E	6
T341	G	2
T342	G	2
T343	G	2
T344	H	2
T345	H	2
T346	H	2
T347	H	2
T348	H	2
T349	I	2
T350	I	2

8 - 2

KARAOKE BOARD

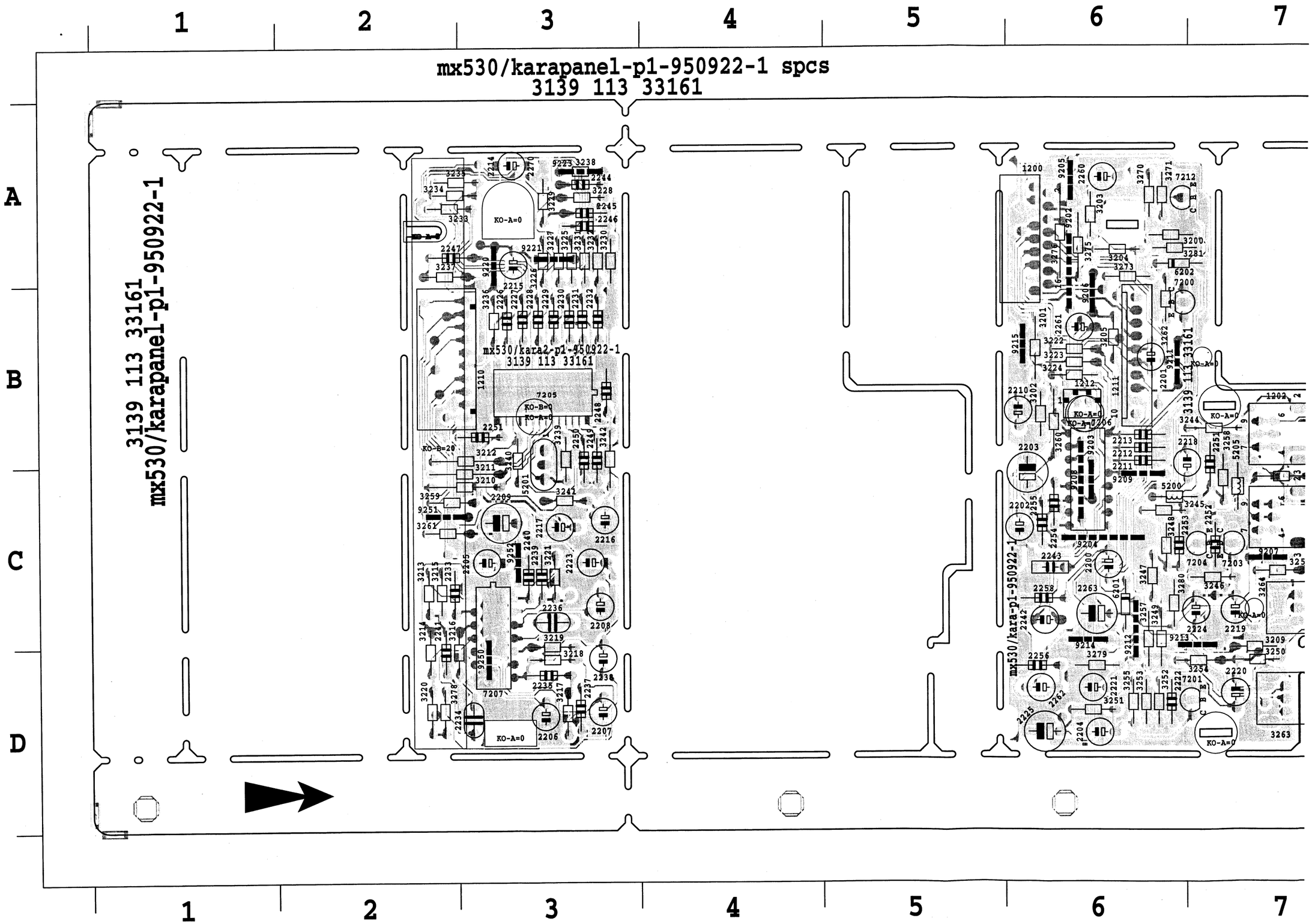

8 - 2

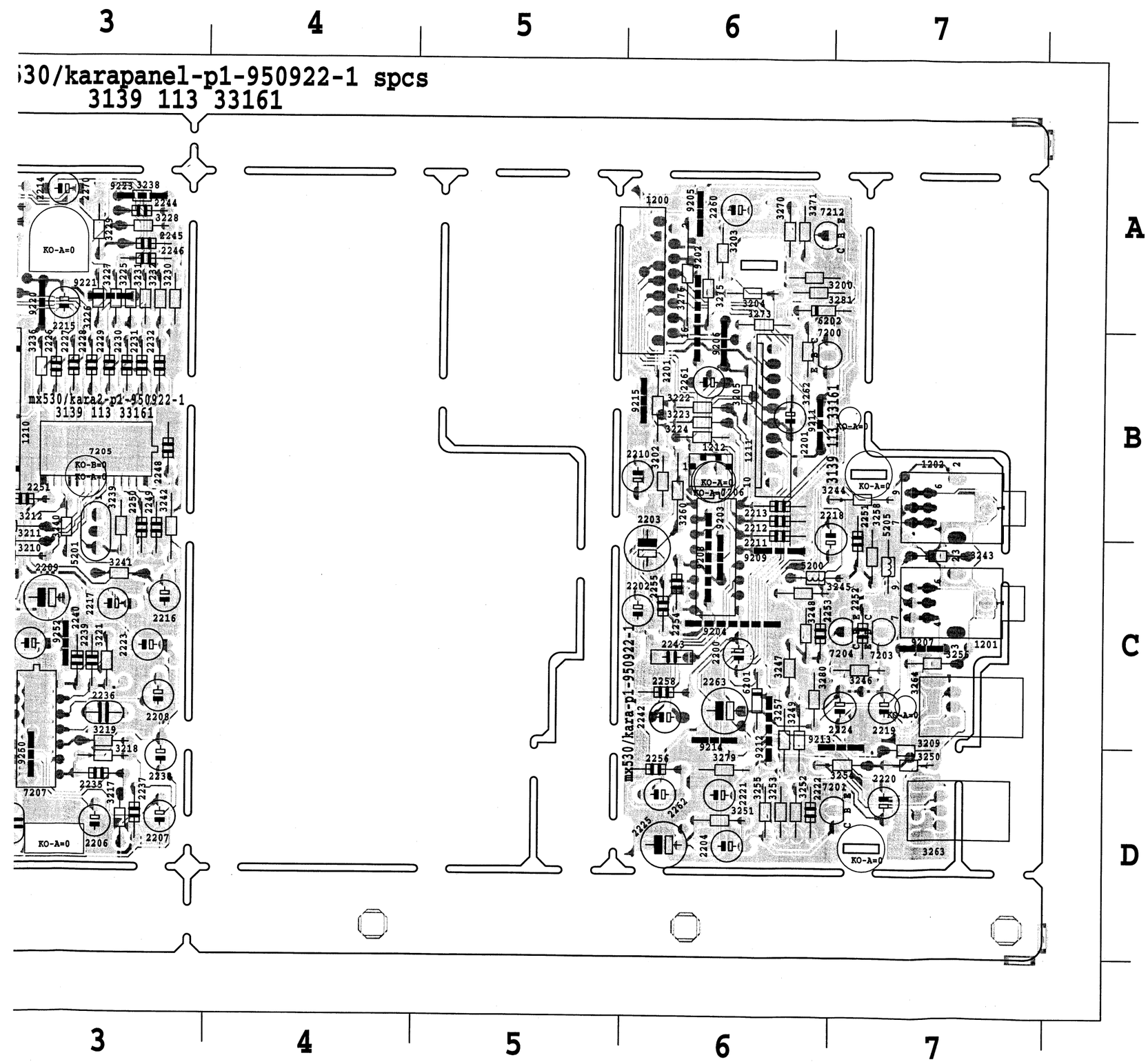

1200 A 6	3257 C 6	2234 D 3	9252 C 3
1201 C 7	3258 C 7	2235 D 3	
1202 B 7	3260 B 6	2236 C 3	
1211 B 6	3262 B 6	2237 D 3	
1212 B 6	3263 D 7	2238 D 3	
2200 C 6	3264 C 7	2239 C 3	
2201 B 6	3270 A 6	2240 C 3	
2202 C 6	3271 A 6	2241 D 2	
2203 C 6	3273 A 6	2244 A 3	
2204 D 6	3275 A 6	2245 A 3	
2210 B 6	3276 A 6	2246 A 3	
2211 B 6	3279 D 6	2247 A 2	
2212 B 6	3280 C 6	2248 B 3	
2213 B 6	3281 A 6	2249 B 3	
2218 B 7	5200 C 6	2250 B 3	
2219 C 7	5205 C 7	2251 B 3	
2220 D 7	6201 C 6	2270 A 3	
2221 D 6	6202 A 6	3210 C 3	
2222 D 6	7200 B 6	3211 C 3	
2224 C 7	7201 D 7	3212 B 3	
2225 D 6	7203 C 7	3213 C 2	
2242 C 6	7204 C 7	3214 D 2	
2243 C 6	7206 C 6	3215 C 2	
2251 C 7	7212 A 6	3216 D 2	
2252 C 7	9202 A 6	3217 D 3	
2253 C 6	9203 C 6	3218 D 3	
2254 C 6	9204 C 6	3219 D 3	
2255 C 6	9205 A 6	3220 D 2	
2256 D 6	9206 B 6	3221 C 3	
2258 C 6	9207 C 7	3225 A 3	
2260 A 6	9208 C 6	3226 A 3	
2261 B 6	9209 C 6	3227 A 3	
2262 D 6	9211 B 6	3228 A 3	
2263 C 6	9212 C 6	3229 A 3	
3200 A 6	9213 D 7	3230 A 3	
3201 B 6	9214 C 6	3231 A 3	
3202 B 6	9215 B 6	3232 A 3	
3203 A 6	----	3233 A 2	
3204 A 6	----	3234 A 2	
3205 B 6	1210 B 3	3235 A 2	
3209 D 7	2205 C 3	3236 B 3	
3222 B 6	2206 D 3	3237 A 2	
3223 B 6	2207 D 3	3238 A 3	
3224 B 6	2208 C 3	3239 B 3	
3243 C 7	2209 C 3	3240 B 3	
3244 B 7	2214 A 3	3241 C 3	
3245 C 6	2215 A 3	3242 B 3	
3246 C 7	2216 C 3	3259 C 2	
3247 C 6	2217 C 3	3261 C 2	
3248 C 6	2223 C 3	3278 D 2	
3249 C 6	2226 B 3	5201 B 3	
3250 D 7	2227 B 3	7205 B 3	
3251 D 6	2228 B 3	7207 C 3	
3252 D 6	2229 B 3	9220 A 3	
3253 D 6	2230 B 3	9221 A 3	
3254 D 7	2231 B 3	9223 A 3	
3255 D 6	2232 B 3	9250 D 3	
3256 C 7	2233 C 2	9251 C 2	

8 - 3

KARAOKE CIRCUIT II

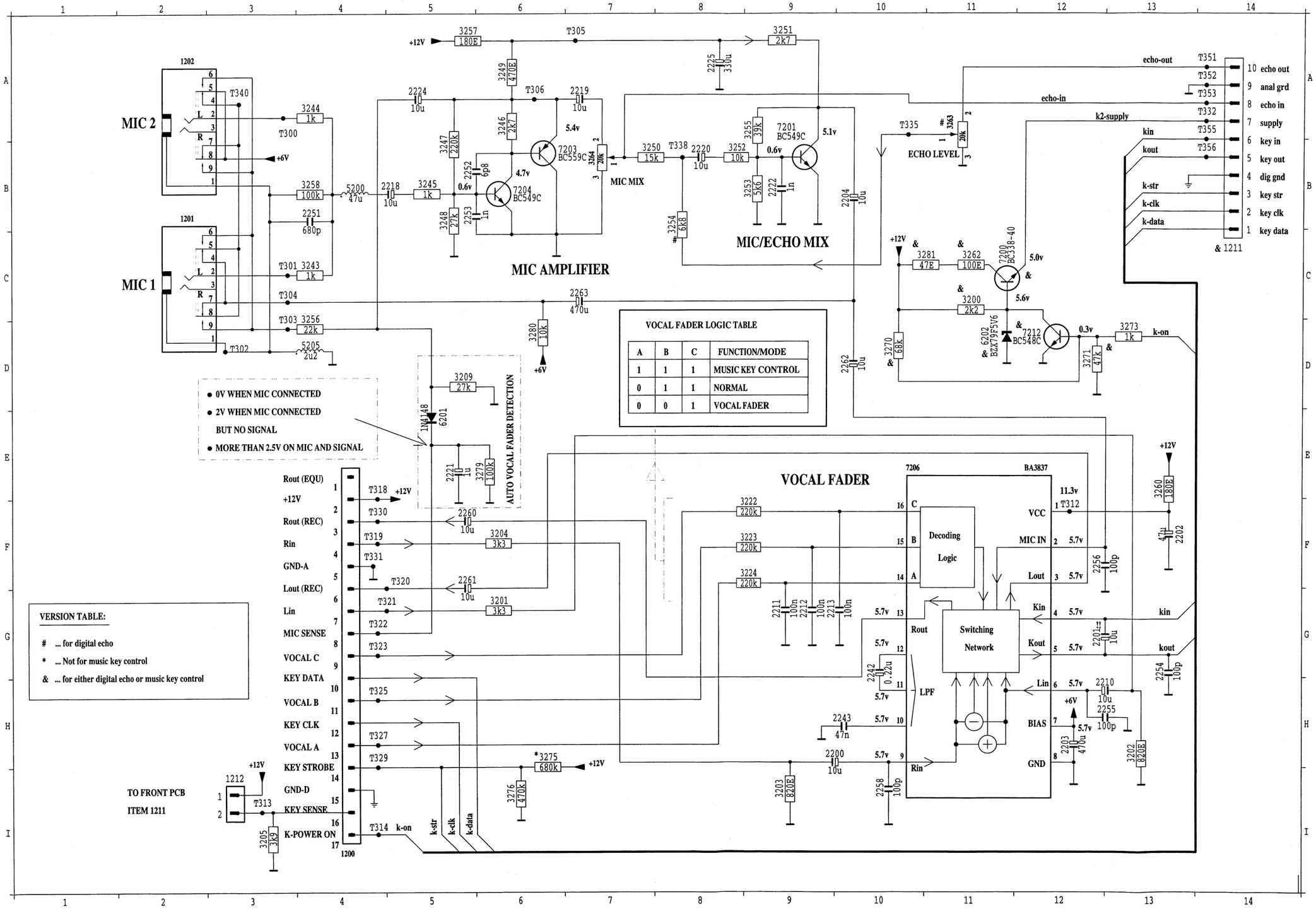

ELECTRICAL PARTS - KARAOKE BOARD

MISCELLANEOUS

1201	4822 267 31792	Mic Socket
1202	4822 267 31792	Mic Socket

CAPACITORS

2200	4822 124 41579	10µF 20% 50V
2201	4822 124 41579	10µF 20% 50V
2202	4822 124 23624	47µF 20% 16V
2203	4822 124 41997	470µF 10V
2204	4822 124 41579	10µF 20% 50V
2210	4822 124 22403	10µF 20% 16V
2211	4822 126 12882	100nF +80-20% 50V
2212	4822 126 12882	100nF +80-20% 50V
2213	4822 126 12882	100nF +80-20% 50V
2218	4822 124 41579	10µF 20% 50V
2219	4822 124 22403	10µF 20% 16V
2220	4822 124 22403	10µF 20% 16V
2221	4822 124 40242	1µF 20% 63V
2222	4822 122 33197	1nF 10% 50V
2224	4822 124 41579	10µF 20% 50V
2225	4822 124 40849	330µF 20% 16V
2242	4822 124 40746	0.22µF 20% 63V
2243	4822 121 43526	47nF 5% 250V
2251	4822 122 33169	680pF 10% 50V
2252	4822 126 12572	6.8pF 5% 50V
2253	4822 122 33197	1nF 10% 50V
2254	4822 122 33195	100pF 10% 50V
2255	4822 122 33195	100pF 10% 50V
2256	4822 122 33195	100pF 10% 50V
2258	4822 122 33195	100pF 10% 50V
2260	4822 124 41579	10µF 20% 50V
2261	4822 124 41579	10µF 20% 50V
2262	4822 124 41579	10µF 20% 50V
2263	4822 124 41997	470µF 10V

RESISTORS

3200	4822 116 52256	2k2 5% 0.5W
3201	4822 116 52269	3k3 5% 0.5W
3202	4822 116 52231	820Ω 5% 0.5W
3203	4822 116 52231	820Ω 5% 0.5W
3204	4822 116 52269	3k3 5% 0.5W
3205	4822 116 52276	3k9 5% 0.5W
3209	4822 116 52264	27k 5% 0.5W
3222	4822 116 83874	220k 5% 0.5W
3223	4822 116 83874	220k 5% 0.5W
3224	4822 116 83874	220k 5% 0.5W
3243	4822 050 11002	1k 1% 0.4W
3244	4822 050 11002	1k 1% 0.4W
3245	4822 050 11002	1k 1% 0.4W
3246	4822 116 52263	2k7 5% 0.5W
3247	4822 116 83874	220k 5% 0.5W
3248	4822 116 52264	27k 5% 0.5W
3249	4822 116 52224	470Ω 5% 0.5W
3250	4822 116 52244	15k 5% 0.5W
3251	4822 116 52263	2k7 5% 0.5W
3252	4822 116 83864	10k 5% 0.5W

RESISTORS

3253	4822 116 52289	5k6 5% 0.5W
3255	4822 116 83882	39k 5% 0.5W
3256	4822 116 52257	22k 5% 0.5W
3257	4822 116 52213	180Ω 5% 0.5W
3258	4822 116 52234	100k 5% 0.5W
3260	4822 116 52213	180Ω 5% 0.5W
3262	4822 116 52175	100Ω 5% 0.5W
3264	4822 101 21204	Potm 20KA
3270	4822 116 52297	68k 5% 0.5W
3271	4822 116 52284	47k 5% 0.5W
3273	4822 050 11002	1k 1% 0.4W
3275	4822 116 52298	680k 5% 0.5W
3276	4822 116 52285	470k 5% 0.5W
3279	4822 116 52234	100k 5% 0.5W
3280	4822 116 83864	10k 5% 0.5W
3281	4822 116 52195	47Ω 5% 0.5W

COILS

5200	4822 157 53906	Coil 47µH 10%
5205	4822 157 62552	Coil 2.2µH 20%

DIODES

6201	4822 130 30621	1N4148
6202	4822 130 34173	BZX79-F5V6

TRANSISTORS

7200	5322 130 44779	BC338-40
7201	4822 130 44246	BC549C
7203	4822 130 42625	BC559C
7204	4822 130 44246	BC549C
7212	4822 130 44196	BC548C

INTEGRATED CIRCUITS

7206	4822 209 90408	BA3837

Note: Only the parts mentioned in this list are normal service parts.

8-4

Remarks

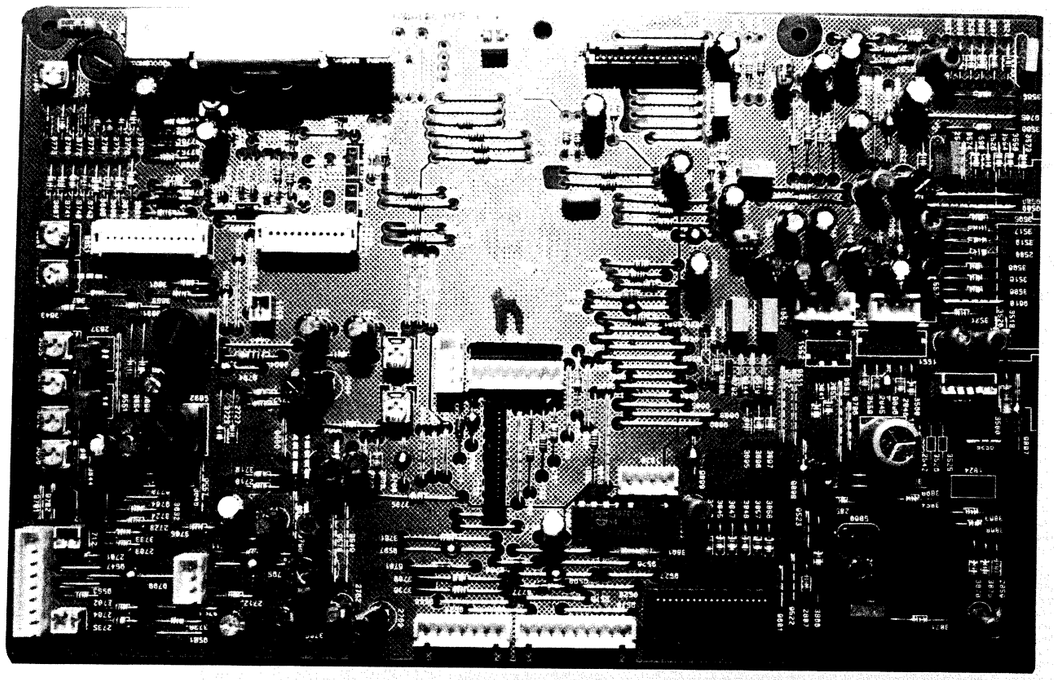

COMBI BOARD

TABLE OF CONTENTS

9-2

FUNCTIONAL DIAGRAM TAPE PART

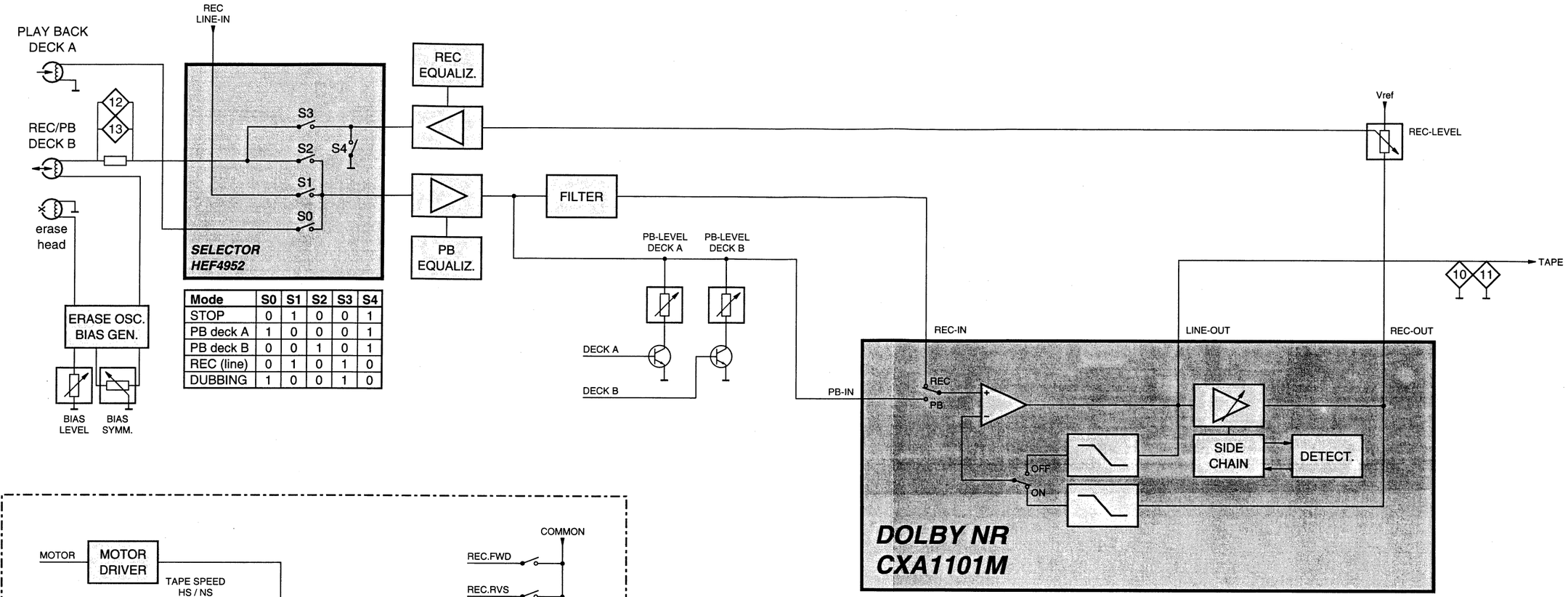

Mode	S0	S1	S2	S3	S4
STOP	0	1	0	0	1
PB deck A	1	0	0	0	1
PB deck B	0	0	1	0	1
REC (line)	0	1	0	1	0
DUBBING	1	0	0	1	0

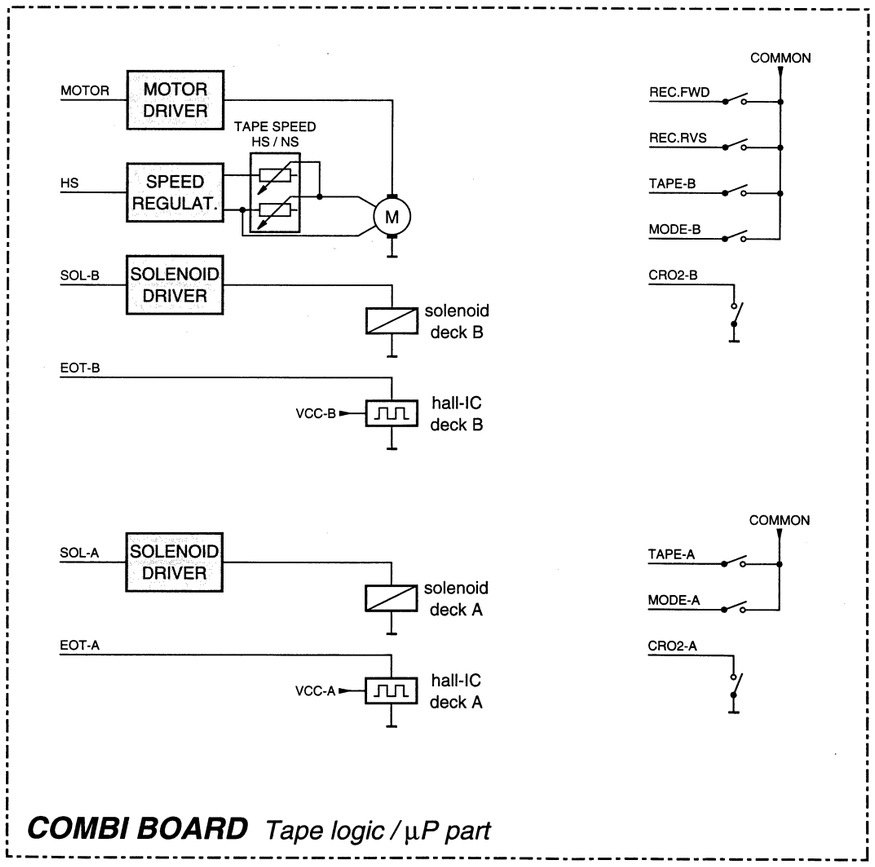

9-3

FUNCTIONAL DIAGRAM CD-PART

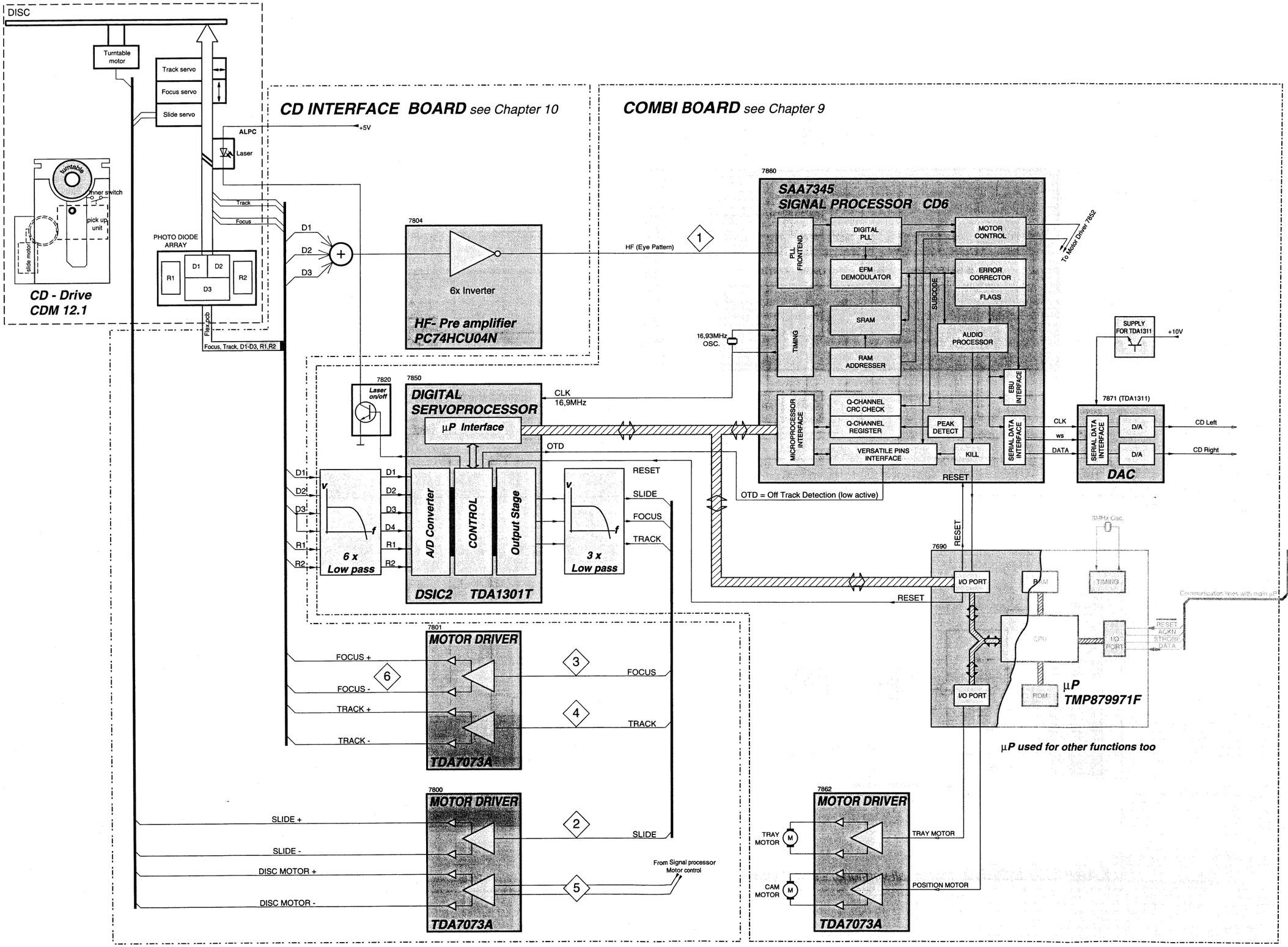

9-4

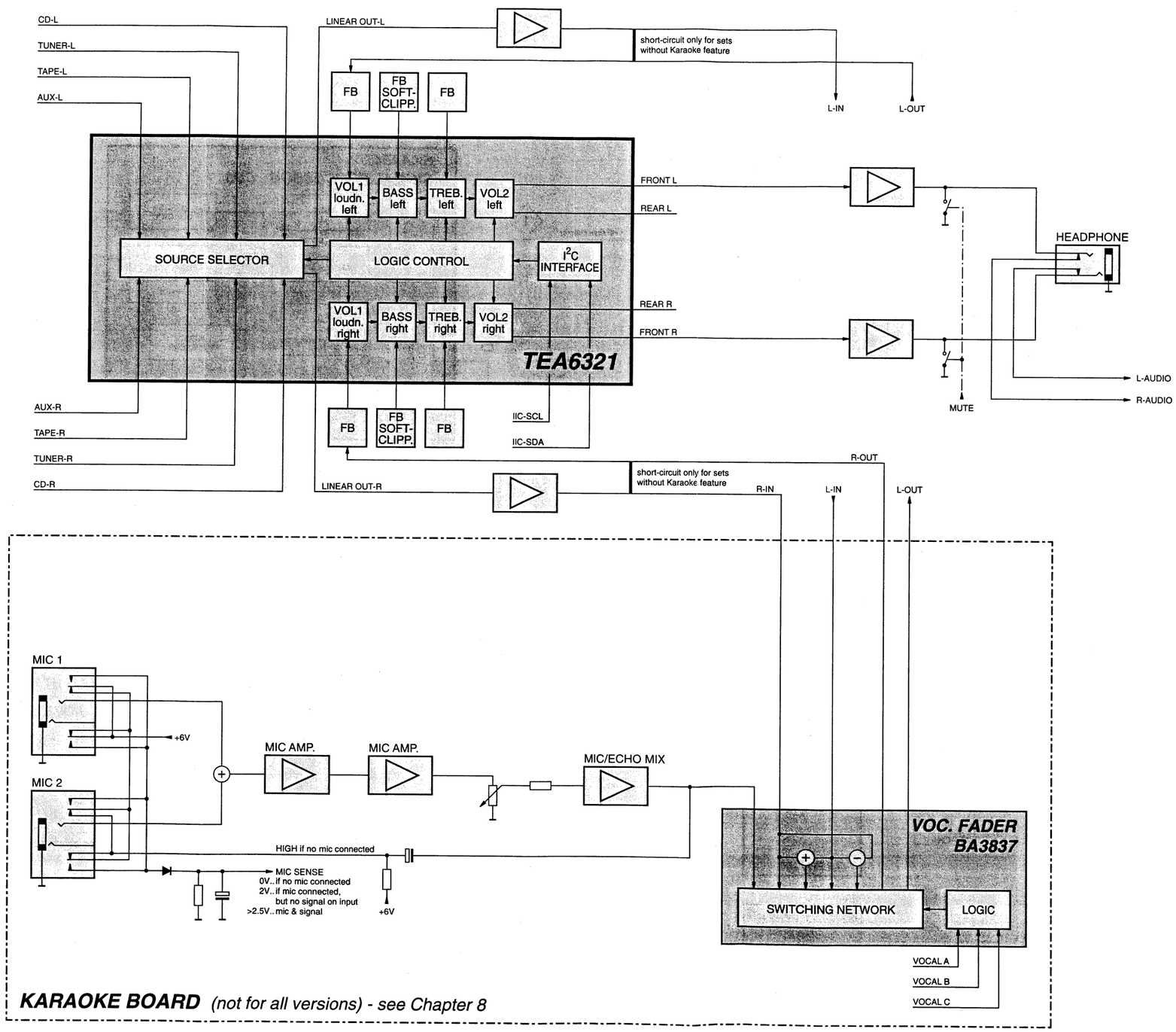
CD-L
TUNER-L
TAPE-L
AUX-L
LINEAR OUT-L
short-circuit only for sets without Karaoke feature
FB
FB SOFT-CLIPP.
FB
L-IN
L-OUT
VOL1 loudn. left
BASS left
TREB. left
VOL2 left
FRONT L
REAR L
SOURCE SELECTOR
LOGIC CONTROL
I²C INTERFACE
HEADPHONE
VOL1 loudn. right
BASS right
TREB. right
VOL2 right
REAR R
FRONT R
TEA6321
L-AUDIO
R-AUDIO
MUTE
AUX-R
TAPE-R
TUNER-R
CD-R
FB
FB SOFT-CLIPP.
FB
IIC-SCL
IIC-SDA
R-OUT
short-circuit only for sets without Karaoke feature
LINEAR OUT-R
R-IN
L-IN
L-OUT
MIC 1
+6V
MIC AMP.
MIC AMP.
MIC/ECHO MIX
MIC 2
HIGH if no mic connected
MIC SENSE
0V.. if no mic connected
2V.. if mic connected, but no signal on input
>2.5V.. mic & signal
+6V
VOC. FADER BA3837
SWITCHING NETWORK
LOGIC
VOCAL A
VOCAL B
VOCAL C
KARAOKE BOARD (not for all versions) - see Chapter 8

General

	TEST CASSETTE	RECORDER MODE	MEASURE ON	READ ON	ADJUST with	ADJUST to
ADJUST MOTOR SPEED						
HIGH SPEED	SBC420 (4822 397 30071) 3150Hz	DUBBING	10 or 11 (LEFT / RIGHT)	frequency counter	3682	5670Hz ±0.5%
NORMAL SPEED		PLAY			3684	3150Hz ±0.5%
CHECK WOW & FLUTTER (DECK1 AND DECK2)						
WOW & FLUTTER	SBC420 (4822 397 30071) 3150Hz	PLAY	10 or 11 (LEFT / RIGHT)	W&F-meter	check only	≤0.35% unwtd.
ADJUST AZIMUTH (DECK1 AND DECK2)						
NORM. DIRECTION	SBC420 (4822 397 30071) 10kHz	PLAY FWD	10 & 11 (LEFT / RIGHT)	mV-meter	left hand screw	max. output level & left=right
REV. DIRECTION		PLAY REV			right hand screw	

Playback

	TEST CASSETTE	RECORDER MODE	MEASURE ON	READ ON	ADJUST with	ADJUST to
ADJUST PLAYBACK LEVEL						
DECK1	DOLBY REF. (4822 397 30071) 200nWb/m	PLAY	10 & 11 (LEFT / RIGHT)	mV-meter	3635(L), 3636(R)	535mV ±0.5dB
DECK2					3641(L), 3642(R)	
CHECK PLAYBACK FREQUENCY RESPONSE (DECK1 AND DECK2)						
PB FREQU. RESP.	SBC420 (4822 397 30071)	PLAY	10 & 11 (LEFT / RIGHT)	mV-meter	check only	limits see fig.1

AZITHMUTH ALIGNMENT

Remove ornamental part of cassette door.
For alignment use a small cross slot screwdriver.

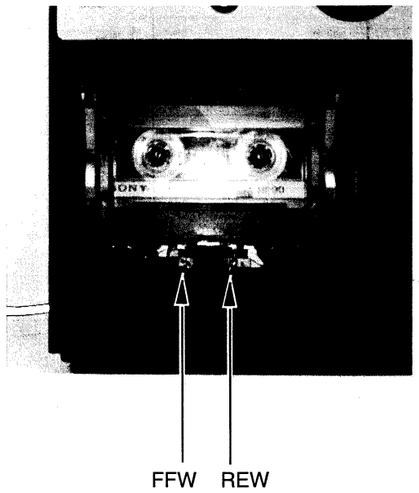

Record

	TEST CASSETTE	RECORDER MODE	MEASURE ON	READ ON	ADJUST with	ADJUST to
PRE-ADJUST BIAS AND BIAS-SYMMETRY						
CrO_2	CrO_2	RECORD	12 & 13 (LEFT / RIGHT)	mV-meter	3773 & 3785	110mV & left=right
FERRO	FERRO	RECORD			check only	71mV ±0.5dB
CHECK OVERALL FREQUENCY RESPONSE AND DISTORTION						
37mV at AUX-IN, 100Hz,250Hz,1kHz, 10kHz,12.5kHz	CrO_2	RECORD				
	RECORDED CASSETTE	PLAY	10 & 11 (LEFT / RIGHT)	mV-meter	check only	limits see fig.2
100mV at AUX-IN, 1kHz	CrO_2	RECORD				
	RECORDED CASSETTE	PLAY	10 & 11 (LEFT / RIGHT)	THD-meter	check only	≤3%
Remark: If high frequencies are not within limits, decrease bias and remeasure. If distortion is too high increase bias and remeasure.						
ADJUST RECORD LEVEL						
AUX-IN	CrO_2	RECORD	10 & 11 (LEFT / RIGHT)	mV-meter	LF-generator	330Hz 170mV
	CrO_2	RECORD	12 & 13 (LEFT / RIGHT)	mV-meter	3655 & 3556	5mV [1]
[1] Remark: Use low pass filter to attenuate the bias component, or short-circuit base of 7783 to ground.						
RECORD LEVEL						
	RECORDED CASSETTE	PLAY	10 & 11 (LEFT / RIGHT)	mV-meter	check only	330Hz 170mV ±0.5dB
Remark: If measured value is out of limit, re-adjust record level and remeasure.						

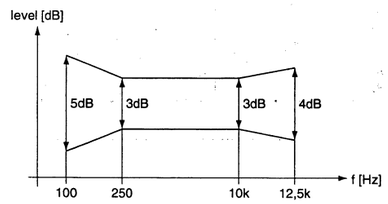

fig.1

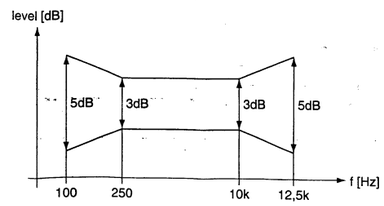

fig.2

9-6

COMBI TAPE LOGIC / MUP PART

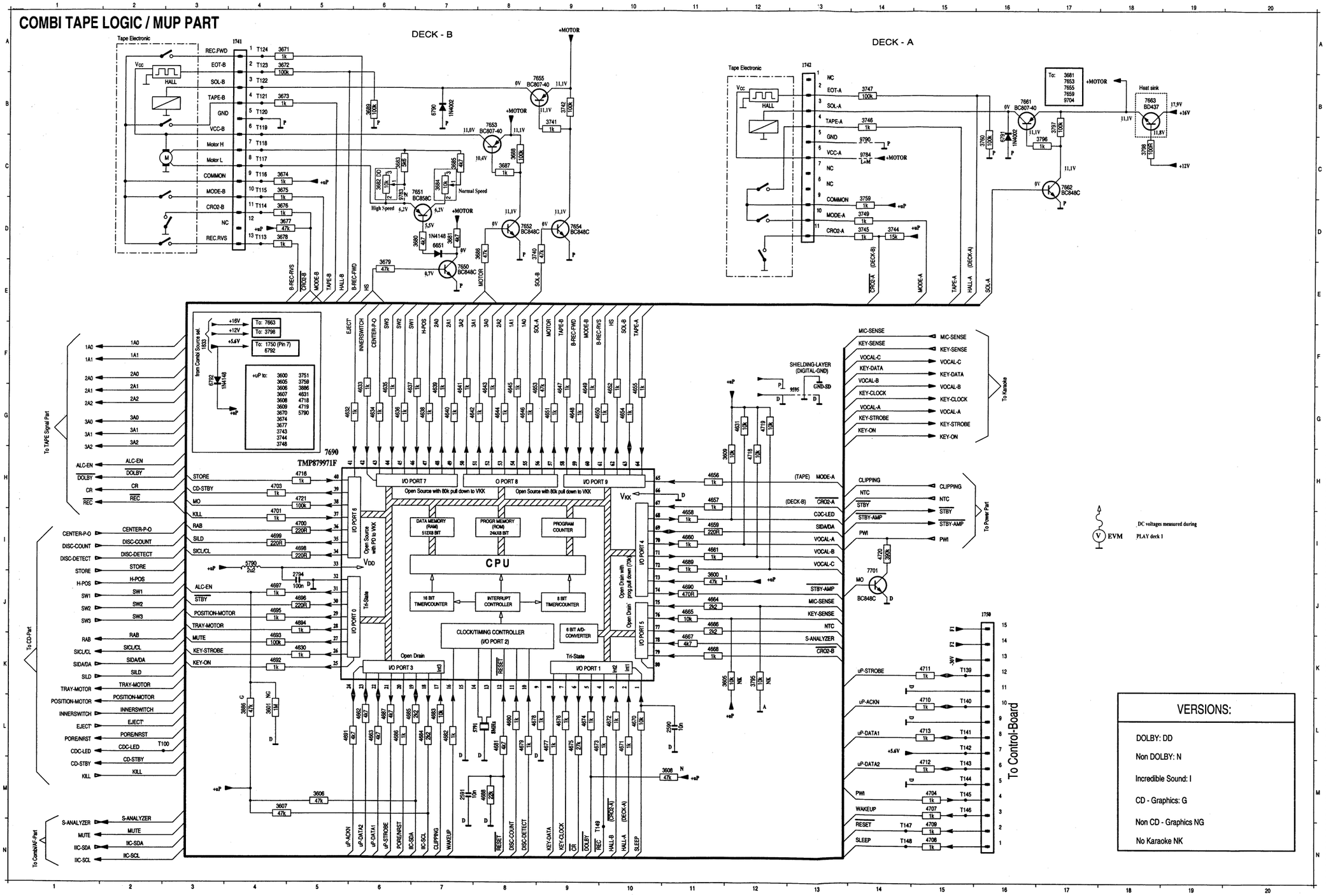

2501 E 2	2586 D 2	2729 A 7	3504 D 4	3551 E 2	3639 C 9	3685 D 9	3729 A 7	3774 E 5	3869 A 4	4525 D 2	4559 E 5	4640 C 6	4674 E 5	4716 C 5	7631 C 9	7783 E 8	T015 A 5	T042 C 2	T074 C 3	T114 D 8	T143 B 6
2502 D 4	2631 C 9	2730 A 7	3506 E 3	3552 D 2	3640 B 9	3689 D 9	3730 A 7	3778 E 9	3872 B 3	4526 E 5	4561 E 5	4641 C 6	4675 E 5	4718 E 5	7632 B 9	7784 E 9	T016 A 5	T043 A 3	T076 C 3	T115 D 8	T144 A 6
2513 E 4	2632 B 9	2731 A 7	3508 D 4	3555 E 2	3644 B 9	3692 C 9	3731 A 7	3779 E 9	3874 B 3	4527 E 4	4565 E 4	4642 C 6	4678 D 5	4719 E 5	7633 C 9	7787 E 9	T018 A 3	T045 C 2	T078 A 5	T116 D 9	T145 B 6
2514 D 4	2633 C 8	2732 A 7	3509 E 1	3556 E 2	3645 C 8	3693 C 7	3732 A 7	3780 E 9	3876 C 3	4529 B 9	4566 B 3	4643 C 6	4681 D 5	4721 C 5	7634 B 9	7788 A 6	T019 A 4	T046 C 1	T079 C 3	T117 C 9	T146 B 6
2515 D 2	2634 B 8	2737 A 8	3510 D 2	3568 E 2	3647 C 8	3695 C 7	3734 A 8	3782 E 9	3877 B 3	4530 E 6	4568 A 7	4644 C 6	4682 D 5	4723 C 8	7640 C 7	7820 A 4	T020 B 2	T047 A 6	T080 D 3	T118 D 9	T147 D 5
2516 C 2	2635 C 8	2738 A 8	3512 D 3	3572 E 6	3648 B 9	3701 A 9	3737 A 9	3783 E 9	3878 B 4	4531 D 8	4572 C 6	4645 C 6	4683 D 5	4724 B 8	7650 D 9	7850 B 4	T021 B 2	T048 B 6	T081 C 2	T119 D 9	T148 E 5
2527 E 2	2636 B 8	2752 E 9	3513 D 2	3574 D 2	3649 C 8	3702 A 9	3743 D 7	3784 E 9	3879 A 3	4533 E 6	4574 C 3	4646 D 6	4687 D 5	4799 C 8	7651 D 9	7851 E 6	T022 B 2	T049 A 3	T082 C 3	T120 D 9	T149 E 7
2528 E 1	2639 C 7	2760 A 8	3514 C 2	3576 D 3	3650 B 9	3703 A 8	3744 D 7	3787 E 9	3880 A 5	4534 C 8	4577 A 5	4647 D 6	4688 D 5	4801 B 2	7652 D 9	7852 B 2	T023 A 2	T050 B 3	T083 E 6	T121 D 9	T161 B 9
2531 E 2	2640 B 7	2782 E 9	3515 D 2	3581 C 2	3651 C 9	3704 A 8	3745 D 7	3790 D 7	3881 A 5	4535 D 7	4578 B 7	4648 C 6	4689 D 6	4802 A 3	7653 D 9	7853 B 2	T024 B 5	T051 A 5	T084 E 5	T122 D 9	T162 E 9
2532 E 2	2643 C 7	2787 E 9	3522 C 2	3582 C 3	3652 B 8	3707 A 8	3746 D 7	3811 A 3	3882 A 5	4536 C 6	4579 D 3	4649 C 6	4690 E 6	4803 A 3	7654 D 9	7856 B 3	T025 B 5	T052 A 6	T085 E 6	T123 D 9	T163 A 9
2533 D 2	2644 B 7	2794 C 5	3523 D 2	3583 E 1	3657 C 7	3708 A 8	3747 D 8	3842 B 2	3883 A 5	4537 A 5	4592 A 6	4650 C 7	4691 D 5	6551 E 4	7655 D 9	7860 A 2	T026 B 4	T053 A 6	T086 E 5	T124 D 9	T164 A 9
2534 C 2	2645 C 7	2834 A 4	3524 D 2	3584 E 2	3658 B 7	3709 A 8	3748 D 8	3843 B 2	3884 A 4	4538 B 6	4593 B 6	4651 C 6	4694 C 5	6552 D 4	7656 E 7	7861 B 3	T027 A 4	T054 A 6	T087 E 6	T125 D 7	T165 A 9
2535 E 3	2646 B 7	2835 A 4	3528 D 3	3585 D 2	3659 C 7	3710 A 8	3749 D 7	3844 A 2	3885 A 5	4540 C 7	4594 C 1	4652 D 6	4696 D 5	6553 E 4	7657 D 7	T001 A 4	T028 B 3	T055 B 2	T088 E 4	T126 D 7	T166 B 9
2536 E 3	2705 A 8	2836 A 4	3529 D 2	3590 D 2	3661 C 7	3711 A 8	3750 D 7	3849 A 3	4500 E 2	4541 B 6	4595 E 5	4653 D 6	4697 C 5	6554 D 4	7658 E 8	T002 A 3	T029 B 2	T056 A 5	T089 E 6	T127 E 7	T167 A 8
2538 C 4	2706 A 8	2837 A 4	3530 C 2	3591 E 1	3662 B 7	3712 A 8	3751 E 7	3850 A 3	4502 C 5	4542 B 6	4596 E 4	4658 D 6	4698 C 5	7501 D 2	7659 E 7	T003 A 3	T030 B 2	T057 A 5	T090 E 4	T128 D 7	T168 A 8
2539 E 5	2707 A 8	2838 A 4	3532 D 3	3592 E 2	3665 C 7	3713 A 8	3752 E 7	3851 B 2	4503 A 9	4543 A 5	4597 E 5	4659 D 6	4699 C 5	7502 D 4	7660 E 8	T004 A 4	T031 C 6	T059 A 5	T091 E 6	T129 E 7	T169 A 8
2540 D 4	2708 A 8	2839 A 3	3533 E 4	3599 B 2	3666 B 7	3714 A 7	3756 D 7	3852 B 3	4506 C 8	4545 B 1	4599 E 4	4660 D 6	4700 C 5	7503 C 2	7661 D 8	T005 A 3	T032 B 3	T061 E 3	T092 E 4	T130 D 7	T170 E 8
2553 D 5	2709 A 8	2840 A 5	3534 E 4	3600 E 6	3670 D 9	3716 A 8	3758 E 7	3853 B 2	4510 B 1	4546 B 6	4631 E 5	4661 E 6	4701 C 5	7504 C 2	7662 D 8	T006 A 4	T033 C 6	T062 E 4	T093 E 1	T131 E 7	T171 A 7
2559 E 3	2710 A 8	2841 A 3	3537 D 4	3605 E 5	3673 D 9	3719 B 8	3760 E 6	3856 A 3	4511 E 8	4547 B 7	4632 C 6	4662 D 5	4702 A 7	7505 E 2	7690 D 6	T007 A 4	T034 C 5	T063 A 5	T094 E 1	T132 D 8	T172 B 7
2573 C 2	2719 C 8	2850 A 3	3538 D 4	3606 E 4	3674 D 9	3720 B 8	3762 A 5	3859 B 3	4516 A 7	4548 C 2	4633 C 6	4663 D 5	4703 C 5	7506 E 2	7701 C 5	T008 A 4	T035 C 5	T064 E 5	T095 C 1	T133 E 7	T173 C 9
2574 C 2	2720 B 8	2851 A 3	3539 D 4	3607 D 4	3675 D 8	3721 C 8	3763 A 8	3860 A 3	4517 C 8	4549 B 3	4634 C 6	4664 D 6	4704 B 6	7507 E 3	7710 A 9	T009 A 3	T036 C 5	T065 E 5	T096 C 1	T134 D 8	T174 B 9
2581 D 2	2721 B 8	2852 A 3	3540 C 4	3608 E 6	3676 D 8	3722 B 8	3764 A 7	3861 A 4	4518 D 8	4550 B 6	4635 C 6	4665 E 6	4705 A 6	7508 C 1	7720 A 8	T010 A 4	T037 C 5	T066 E 3	T097 D 1	T135 E 8	T175 C 8
2582 C 2	2723 B 7	2857 B 3	3545 C 4	3609 E 6	3677 D 8	3725 B 8	3767 A 6	3862 A 3	4520 D 4	4553 C 1	4636 C 6	4666 D 6	4710 B 5	7509 C 1	7730 B 8	T011 A 4	T038 C 6	T067 E 3	T098 D 1	T139 B 6	T176 C 9
2583 D 2	2724 B 8	2861 B 2	3547 E 2	3633 C 9	3678 D 8	3726 B 7	3769 A 7	3864 B 3	4521 E 6	4554 C 1	4637 C 6	4667 E 6	4711 B 6	7512 C 4	7740 A 7	T012 A 4	T039 C 6	T068 E 5	T099 E 1	T140 B 6	T177 B 5
2584 C 2	2725 B 7	3501 E 2	3548 E 2	3634 B 9	3680 D 9	3727 A 7	3771 E 9	3865 B 3	4523 D 8	4557 E 6	4638 C 6	4669 E 6	4712 B 5	7553 E 3	7780 E 9	T013 A 4	T040 C 6	T072 D 2	T100 E 6	T141 B 6	
2585 D 2	2726 B 7	3502 D 4	3549 D 5	3638 B 9	3683 C 9	3728 A 7	3772 E 8	3867 B 3	4524 C 8	4558 E 6	4639 C 6	4670 E 6	4713 B 5	7630 C 9	7781 E 9	T014 B 3	T041 C 6	T073 B 2	T113 D 8	T142 A 5	

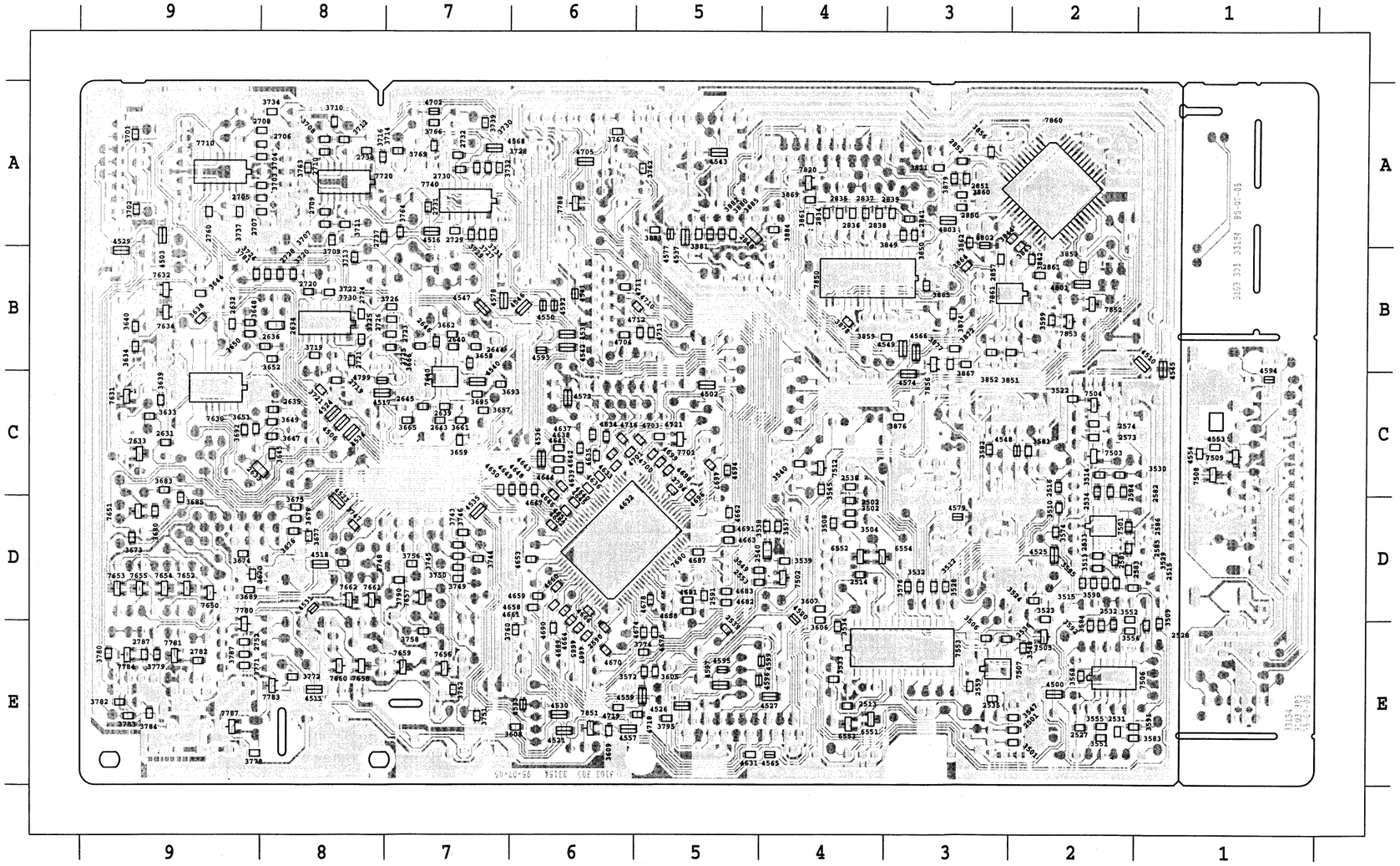

9790 E 7	9605 B 4	9571 A 5	9545 C 5	9523 A 3	9501 A 8	5860 A 3	4673 E 6	3
9791 E 7	9606 C 4	9574 E 2	9547 A 9	9524 A 6	9502 A 7	6651 D 9	4676 E 5	3
9792 B 7	9607 C 4	9576 A 5	9549 A 7	9525 B 2	9503 B 3	6652 E 7	4677 E 5	3
9793 B 7	9608 B 4	9577 A 6	9550 A 6	9526 A 5	9504 C 4	6760 A 6	4679 D 5	3
9794 C 8	9609 B 4	9578 B 5	9551 C 9	9527 A 5	9505 D 3	6772 E 9	4680 D 5	3
9795 A 8	9610 C 2	9579 A 5	9552 C 8	9528 A 5	9506 B 6	6773 E 9	4684 D 4	3
9796 A 7	9613 B 5	9581 E 4	9553 A 9	9531 B 5	9507 E 3	6774 E 9	4685 D 4	3
9797 B 7	9701 B 9	9592 E 3	9554 B 6	9532 E 4	9508 D 2	6775 E 9	4686 D 4	3
9798 B 7	9702 B 9	9593 E 2	9556 B 8	9533 E 4	9509 D 2	6776 E 9	4692 D 5	3
9799 A 9	9703 A 6	9594 D 4	9557 B 8	9534 E 6	9511 B 3	6777 A 5	4693 C 4	4
9895 D 2	9704 B 9	9595 C 5	9558 C 8	9535 E 6	9512 B 3	6778 B 9	4695 B 5	4
9896 C 2	9705 E 2	9596 B 6	9559 B 6	9536 E 6	9513 A 6	6790 D 9	4707 B 5	4
9897 B 1	9706 B 3	9597 A 6	9561 B 6	9537 E 7	9514 C 8	6791 D 8	4708 B 5	4
9898 B 3	9783 C 9	9598 A 5	9562 C 2	9538 E 7	9515 E 4	6792 C 4	4709 B 5	4
9899 B 4	9784 E 7	9599 D 1	9563 C 5	9539 C 5	9516 E 7	6857 B 6	4720 C 5	4
	9785 D 7	9600 D 8	9564 E 4	9540 C 7	9517 E 4	7663 E 8	5631 C 8	4
	9786 D 8	9601 A 3	9565 D 8	9541 D 3	9518 C 3	7782 E 9	5632 B 8	4
	9787 E 7	9602 C 8	9566 D 8	9542 C 6	9519 C 4	7785 B 9	5701 E 9	4
	9788 E 7	9603 C 4	9567 E 8	9543 C 6	9520 C 5	7786 B 9	5790 C 5	4
	9789 B 7	9604 B 4	9570 A 7	9544 C 4	9522 A 3	7862 A 5	5791 D 5	4

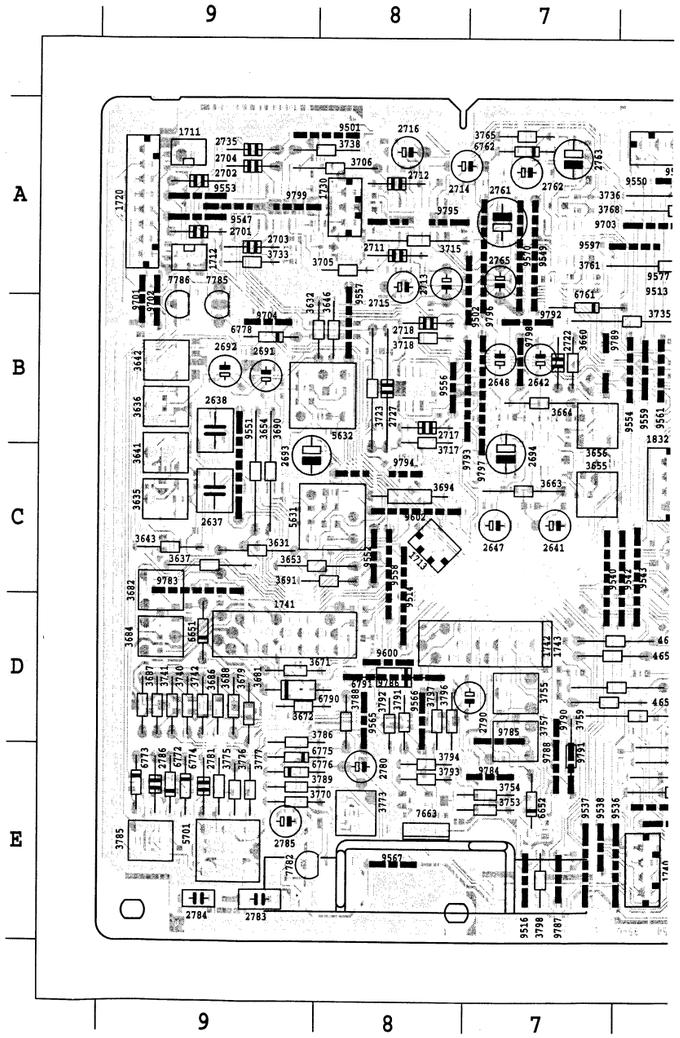

4674 E 5	4716 C 5	7631 C 9	7783 E 8	T015 A 5	T042 C 2	T074 C 3	T114 D 8	T143 B 6
4675 E 5	4718 E 5	7632 B 9	7784 E 9	T016 A 5	T043 A 3	T076 C 3	T115 D 8	T144 A 6
4678 D 5	4719 E 5	7633 C 9	7787 E 9	T018 A 3	T045 C 2	T078 A 5	T116 D 9	T145 B 6
4681 D 5	4721 C 5	7634 B 9	7788 A 6	T019 A 4	T046 C 1	T079 C 3	T117 C 9	T146 B 6
4682 D 5	4723 C 8	7640 C 7	7820 A 4	T020 B 2	T047 A 6	T080 D 3	T118 D 9	T147 D 5
4683 D 5	4724 B 8	7650 D 9	7850 B 4	T021 B 2	T048 B 6	T081 C 2	T119 D 9	T148 E 5
4687 D 5	4799 C 8	7651 D 9	7851 E 6	T022 B 2	T049 A 3	T082 C 3	T120 D 9	T149 E 7
4688 D 5	4801 B 2	7652 D 9	7852 B 2	T023 A 2	T050 B 3	T083 E 6	T121 D 9	T161 B 9
4689 D 6	4802 A 3	7653 D 9	7853 B 2	T024 B 5	T051 A 5	T084 E 5	T122 D 9	T162 E 9
4690 E 6	4803 A 3	7654 D 9	7856 B 3	T025 B 5	T052 A 6	T085 E 6	T123 D 9	T163 A 9
4691 D 5	6551 E 4	7655 D 9	7860 A 2	T026 B 4	T053 A 6	T086 E 5	T124 D 9	T164 A 9
4694 C 5	6552 D 4	7656 E 7	7861 B 3	T027 A 4	T054 A 6	T087 E 6	T125 D 7	T165 A 9
4696 D 5	6553 E 4	7657 D 7	T001 A 4	T028 B 3	T055 B 2	T088 E 4	T126 D 7	T166 B 9
4697 C 5	6554 D 4	7658 E 8	T002 A 3	T029 B 2	T056 A 5	T089 E 6	T127 E 7	T167 A 8
4698 C 5	7501 D 2	7659 E 7	T003 A 3	T030 B 2	T057 A 5	T090 E 4	T128 D 7	T168 A 8
4699 C 5	7502 D 4	7660 E 8	T004 A 4	T031 C 6	T059 A 5	T091 E 6	T129 E 7	T169 A 8
4700 C 5	7503 C 2	7661 D 8	T005 A 3	T032 B 3	T061 E 3	T092 E 4	T130 D 7	T170 E 8
4701 C 5	7504 C 2	7662 D 8	T006 A 4	T033 C 6	T062 E 4	T093 E 1	T131 E 7	T171 A 7
4702 A 7	7505 E 2	7690 D 6	T007 A 4	T034 C 5	T063 A 5	T094 E 1	T132 D 8	T172 B 7
4703 C 5	7506 E 2	7701 C 5	T008 A 4	T035 C 5	T064 E 5	T095 C 1	T133 E 7	T173 C 9
4704 B 6	7507 E 3	7710 A 9	T009 A 3	T036 C 5	T065 E 5	T096 C 1	T134 D 8	T174 B 9
4705 A 6	7508 C 1	7720 A 8	T010 A 4	T037 C 5	T066 E 3	T097 D 1	T135 E 8	T175 C 8
4710 B 5	7509 C 1	7730 B 8	T011 A 4	T038 C 6	T067 E 3	T098 D 1	T139 B 6	T176 C 9
4711 B 6	7512 C 4	7740 A 7	T012 A 4	T039 C 6	T068 E 5	T099 E 1	T140 B 6	T177 B 5
4712 B 5	7553 E 3	7780 E 9	T013 A 4	T040 C 6	T072 D 2	T100 E 6	T141 B 6	
4713 B 5	7630 C 9	7781 E 9	T014 B 3	T041 C 6	T073 B 2	T113 D 8	T142 A 5	

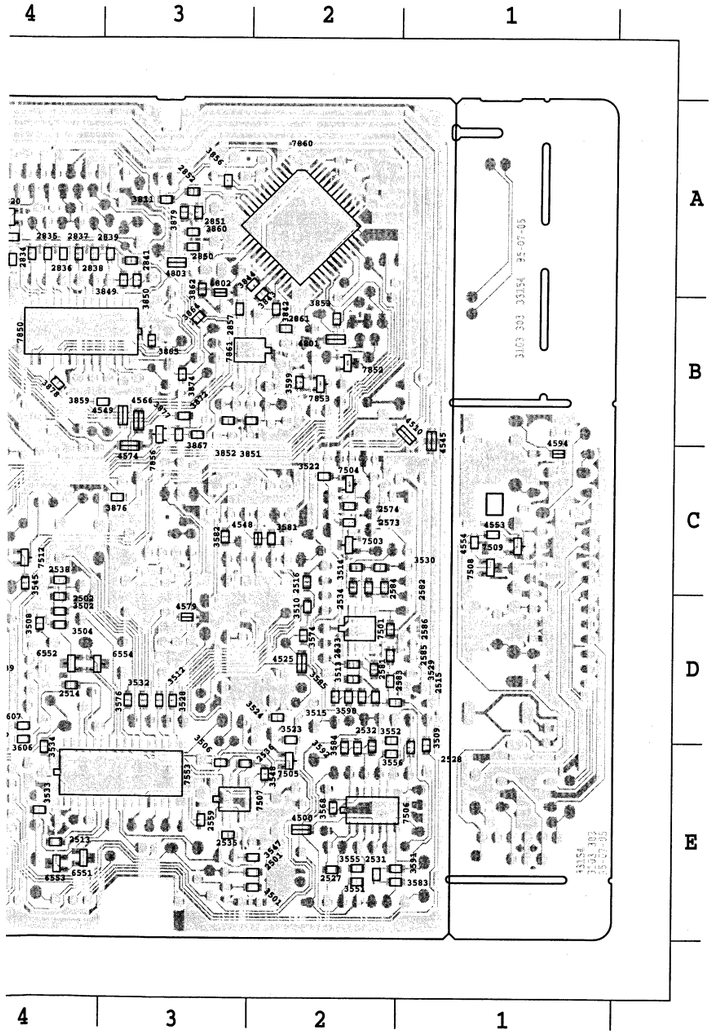

9-7

9790 E 7	9605 B 4	9571 A 5	9545 C 5	9523 A 3	9501 A 8	5860 A 3	4673 E 6	3875 A 2	3793 E 8	3754 E 7	3687 D 9	3636 B 9	3567 E 2	3526 B 2	2845 C 3	2733 D 4	2648 B 7	2557 D 2	2511 E 4	1740 E 6	0002 E 1
9791 E 7	9606 C 4	9574 E 2	9547 A 9	9524 A 6	9502 A 7	6651 D 9	4676 E 5	3886 C 5	3794 E 8	3755 D 7	3688 D 9	3637 C 9	3569 D 1	3527 E 3	2846 C 2	2734 E 5	2691 B 9	2558 D 3	2512 D 4	1741 D 9	0003 B 1
9792 B 7	9607 C 4	9576 A 5	9549 A 7	9525 B 2	9503 B 3	6652 E 7	4677 E 5	3887 C 4	3796 D 8	3757 D 7	3690 C 9	3641 C 9	3570 D 1	3531 E 3	2848 A 2	2735 A 9	2692 B 9	2560 D 3	2517 E 4	1743 D 7	0004 E 1
9793 B 7	9608 B 4	9577 A 6	9550 A 6	9526 A 5	9504 C 4	6760 A 6	4679 D 5	3891 A 5	3797 D 8	3759 E 7	3691 C 8	3642 B 9	3573 E 1	3535 D 4	2849 A 3	2761 A 7	2693 C 9	2561 E 3	2518 D 4	1750 B 6	0007 A 1
9794 C 8	9609 B 4	9578 B 5	9551 C 9	9527 A 5	9505 D 3	6772 E 9	4680 D 5	3895 B 4	3798 E 7	3761 A 6	3694 C 8	3643 C 9	3575 E 3	3536 E 4	2855 A 5	2762 A 7	2694 C 7	2563 D 1	2519 C 2	1820 B 2	1504 B 1
9795 A 8	9610 C 2	9579 A 5	9552 C 8	9528 A 5	9506 B 6	6773 E 9	4684 D 4	3896 B 4	3841 B 3	3765 A 7	3705 A 8	3646 B 8	3577 E 4	3541 E 2	2856 A 3	2763 A 7	2701 A 9	2564 D 1	2520 C 2	1824 B 2	1505 C 2
9796 A 7	9613 B 5	9581 E 4	9553 A 9	9531 B 5	9507 E 3	6774 E 9	4685 D 4	3897 B 3	3845 A 4	3766 A 7	3706 A 8	3653 C 8	3578 D 3	3543 E 4	2858 B 3	2765 A 7	2702 A 9	2565 E 1	2521 E 2	1825 A 4	1551 C 2
9797 B 7	9701 B 9	9592 E 3	9554 B 6	9532 E 4	9508 D 2	6775 E 9	4686 D 4	3898 B 2	3846 A 4	3768 A 6	3715 A 8	3654 C 9	3580 B 1	3544 D 3	2859 A 2	2780 E 8	2703 A 9	2566 E 1	2523 E 2	1828 B 5	1552 C 3
9798 B 7	9702 B 9	9593 E 2	9556 B 8	9533 E 4	9509 D 2	6776 E 9	4692 D 5	3899 B 3	3847 A 4	3770 E 9	3717 B 8	3655 C 7	3586 C 2	3553 E 2	3500 C 4	2781 E 9	2704 A 9	2575 C 1	2524 E 1	1829 A 6	1553 C 3
9799 A 9	9703 A 6	9594 D 4	9557 B 8	9534 E 6	9511 B 3	6777 A 5	4693 C 4	4551 C 1	3848 A 4	3773 E 8	3718 B 8	3656 B 7	3587 C 1	3554 E 2	3503 E 2	2783 E 9	2711 A 8	2576 C 1	2525 E 2	1831 C 6	1554 C 1
9895 D 2	9704 B 9	9595 C 5	9558 C 8	9535 E 6	9512 B 3	6778 B 9	4695 B 5	4552 C 1	3854 B 2	3775 E 9	3723 B 8	3660 B 7	3588 C 1	3557 E 2	3505 E 3	2784 E 9	2712 A 8	2577 E 1	2526 E 2	1832 C 6	1555 C 1
9896 C 2	9705 E 2	9596 B 6	9559 B 6	9536 E 6	9513 A 6	6790 D 9	4707 B 5	4555 E 5	3855 B 3	3776 E 9	3724 A 9	3663 C 7	3589 E 2	3558 E 1	3507 E 4	2785 E 9	2713 A 8	2578 E 1	2529 E 1	1833 A 5	1556 D 1
9897 B 1	9706 B 3	9597 A 6	9561 B 6	9537 E 7	9514 C 8	6791 D 8	4708 B 5	4630 D 5	3857 A 4	3777 E 9	3733 A 9	3664 B 7	3595 D 2	3559 C 3	3511 E 3	2786 E 9	2714 A 7	2579 D 3	2530 E 2	1834 E 5	1557 C 2
9898 B 3	9783 C 9	9598 A 5	9562 C 2	9538 E 7	9515 E 4	6792 C 4	4709 B 5	4654 D 6	3858 A 3	3781 B 9	3735 B 6	3671 D 9	3596 D 2	3560 C 2	3516 D 2	2790 D 7	2715 A 8	2580 D 3	2537 E 2	2503 E 3	1558 D 1
9899 B 4	9784 E 7	9599 D 1	9563 C 5	9539 C 5	9516 E 7	6857 B 6	4720 C 5	4655 D 7	3863 B 2	3785 E 9	3736 A 6	3672 D 9	3597 E 2	3561 C 1	3517 D 2	2807 A 3	2716 A 8	2588 D 2	2541 D 2	2504 D 3	1562 E 6
	9785 D 7	9600 D 8	9564 E 4	9540 C 7	9517 E 4	7663 E 8	5631 C 8	4656 D 7	3866 A 3	3786 D 9	3738 A 8	3679 D 9	3598 E 2	3562 C 1	3518 C 1	2831 B 3	2717 B 8	2637 C 9	2542 B 2	2505 E 3	1711 A 9
	9786 D 8	9601 A 3	9565 D 8	9541 D 3	9518 C 3	7782 E 9	5632 B 8	4657 D 6	3868 A 2	3788 D 8	3740 D 9	3681 D 9	3601 C 5	3563 D 1	3519 D 2	2832 B 2	2718 B 8	2638 B 9	2550 D 4	2506 D 4	1712 A 9
	9787 E 7	9602 C 8	9566 D 8	9542 C 6	9519 C 4	7785 B 9	5701 E 9	4668 E 6	3870 A 2	3789 E 9	3741 D 9	3682 C 9	3631 C 9	3564 D 1	3520 C 2	2833 B 4	2722 B 7	2641 C 7	2552 D 2	2507 E 3	1713 C 8
	9788 E 7	9603 C 4	9567 E 8	9543 C 6	9520 C 5	7786 B 9	5790 C 5	4671 E 6	3871 A 2	3791 D 8	3742 D 9	3684 D 9	3632 B 8	3565 E 2	3521 C 2	2843 D 3	2727 B 8	2642 B 7	2555 C 4	2508 D 4	1720 A 9
	9789 B 7	9604 B 4	9570 A 7	9544 C 4	9522 A 3	7862 A 5	5791 D 5	4672 E 6	3873 C 6	3792 D 8	3753 E 7	3686 D 9	3635 C 9	3566 E 2	3525 B 2	2844 D 3	2728 A 9	2647 C 7	2556 C 4	2509 E 2	1730 A 8

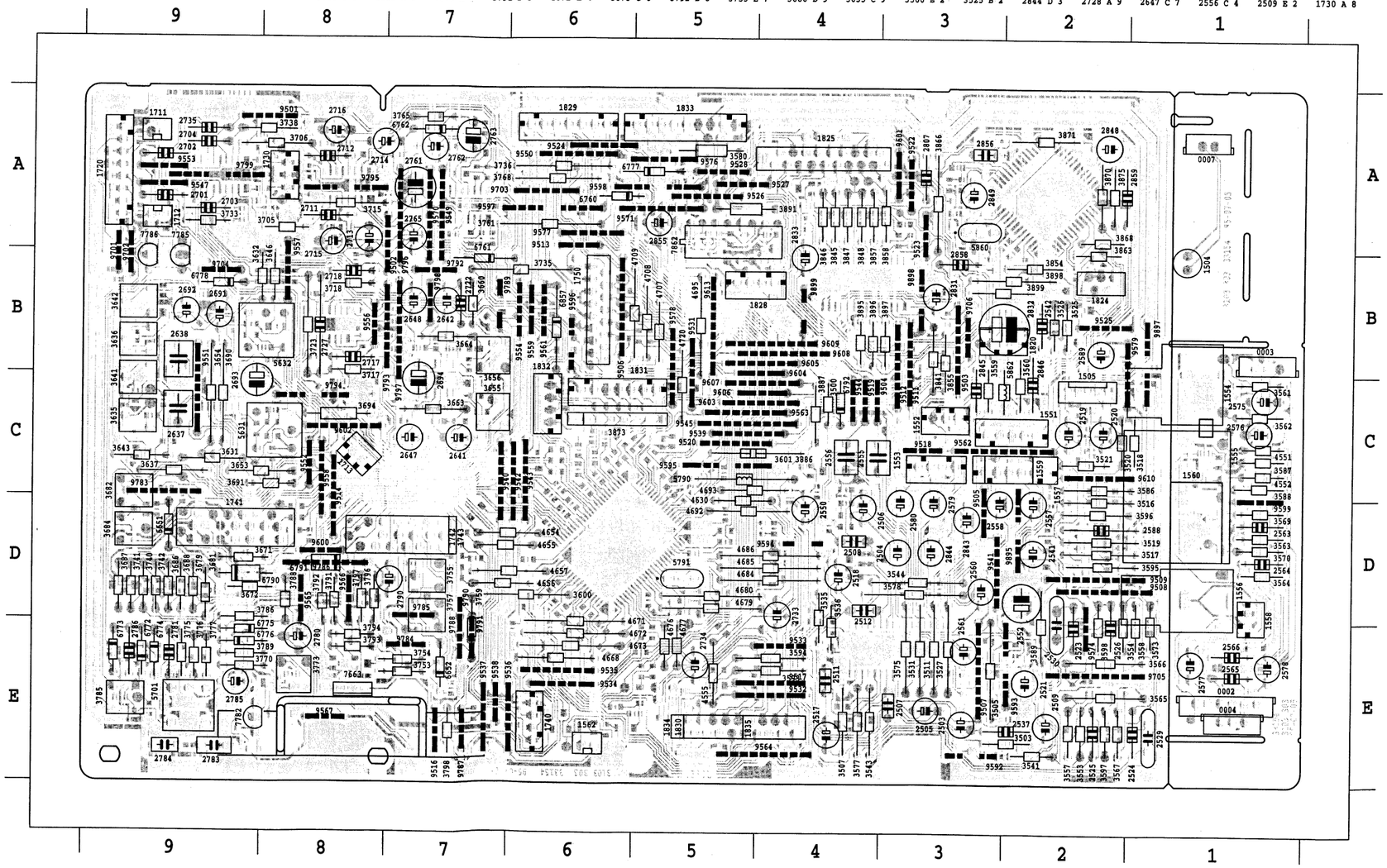

9790 E 7	9605 B 4	9571 A 5	9545 C 5	9523 A 3	9501 A 8	5860 A 3	4673 E 6	3875 A 2	3793 E 8	3754 E 7	3687 D 9	3636 B 9	3567 E 2	3526 B 2	2845 C 3	2733 D 4	2648 B 7
9791 E 7	9606 C 4	9574 E 2	9547 A 9	9524 A 6	9502 A 7	6651 D 9	4676 E 5	3886 C 5	3794 E 8	3755 D 7	3688 D 9	3637 C 9	3569 D 1	3527 E 3	2846 C 2	2734 E 5	2691 B 9
9792 B 7	9607 C 4	9576 A 5	9549 A 7	9525 B 2	9503 B 3	6652 E 7	4677 E 5	3887 C 4	3796 D 8	3757 D 7	3690 C 9	3641 C 9	3570 D 1	3531 E 3	2848 A 2	2735 A 9	2692 B 9
9793 B 7	9608 B 4	9577 A 6	9550 A 6	9526 A 5	9504 C 4	6760 A 6	4679 D 5	3891 A 5	3797 D 8	3759 E 7	3691 C 8	3642 B 9	3573 E 1	3535 D 4	2849 A 3	2761 A 7	2693 C 9
9794 C 8	9609 B 4	9578 B 5	9551 C 9	9527 A 5	9505 D 3	6772 E 9	4680 D 5	3895 B 4	3798 E 7	3761 A 6	3694 C 8	3643 C 9	3575 E 3	3536 E 4	2855 A 5	2762 A 7	2694 C 7
9795 A 8	9610 C 2	9579 A 5	9552 C 8	9528 A 5	9506 B 6	6773 E 9	4684 D 4	3896 B 4	3841 B 3	3765 A 7	3705 A 8	3646 B 8	3577 E 4	3541 E 2	2856 A 3	2763 A 7	2701 A 9
9796 A 7	9613 B 5	9581 E 4	9553 A 9	9531 B 5	9507 E 3	6774 E 9	4685 D 4	3897 B 3	3845 A 4	3766 A 7	3706 A 8	3653 C 8	3578 D 3	3543 E 4	2858 B 3	2765 A 7	2702 A 9
9797 B 7	9701 B 9	9592 E 3	9554 B 6	9532 E 4	9508 D 2	6775 E 9	4686 D 4	3898 B 2	3846 A 4	3768 A 6	3715 A 8	3654 C 9	3580 B 1	3544 D 3	2859 A 2	2780 E 8	2703 A 9
9798 B 7	9702 B 9	9593 E 2	9556 B 8	9533 E 4	9509 D 2	6776 E 9	4692 D 5	3899 B 3	3847 A 4	3770 E 9	3717 B 8	3655 C 7	3586 C 2	3553 E 2	3500 C 4	2781 E 9	2704 A 9
9799 A 9	9703 A 6	9594 D 4	9557 B 8	9534 E 6	9511 B 3	6777 A 5	4693 C 4	4551 C 1	3848 A 4	3773 E 8	3718 B 8	3656 B 7	3587 C 1	3554 E 2	3503 E 3	2783 E 9	2711 A 8
9895 D 2	9704 B 9	9595 C 5	9558 C 8	9535 E 6	9512 B 3	6778 B 9	4695 B 5	4552 C 1	3854 B 2	3775 E 9	3723 B 8	3660 B 7	3588 C 1	3557 E 2	3505 E 3	2784 E 9	2712 A 8
9896 C 2	9705 E 2	9596 B 6	9559 B 6	9536 E 6	9513 A 6	6790 D 9	4707 B 5	4555 E 5	3855 B 3	3776 E 9	3724 A 9	3663 C 7	3589 E 2	3558 E 1	3507 E 4	2785 E 9	2713 A 8
9897 B 1	9706 B 3	9597 A 6	9561 B 6	9537 E 7	9514 C 8	6791 D 8	4708 B 5	4630 D 5	3857 A 4	3777 E 9	3733 A 9	3664 B 7	3595 D 2	3559 C 3	3511 E 3	2786 E 9	2714 A 7
9898 B 3	9783 C 9	9598 A 5	9562 C 2	9538 E 7	9515 E 4	6792 C 4	4709 B 5	4654 D 6	3858 A 3	3781 B 9	3735 B 6	3671 D 9	3596 D 2	3560 C 2	3516 D 2	2790 D 7	2715 A 8
9899 B 4	9784 E 7	9599 D 1	9563 C 5	9539 C 5	9516 E 7	6857 B 6	4720 C 5	4655 D 7	3863 B 2	3785 E 9	3736 A 6	3672 D 9	3597 E 2	3561 C 1	3517 D 2	2807 A 3	2716 A 8
	9785 D 7	9600 D 8	9564 E 4	9540 C 7	9517 E 4	7663 E 8	5631 C 8	4656 D 7	3866 A 3	3786 D 9	3738 A 8	3679 D 9	3598 E 2	3562 C 1	3518 C 1	2831 B 3	2717 B 8
	9786 D 8	9601 A 3	9565 D 8	9541 D 3	9518 C 3	7782 E 9	5632 B 8	4657 D 6	3868 A 2	3788 D 8	3740 D 9	3681 D 9	3601 C 5	3563 D 1	3519 D 2	2832 B 2	2718 B 8
	9787 E 7	9602 C 8	9566 D 8	9542 C 6	9519 C 4	7785 B 9	5701 E 9	4668 E 6	3870 A 2	3789 E 9	3741 D 9	3682 C 9	3631 C 9	3564 D 1	3520 C 2	2833 B 4	2722 B 7
	9788 E 7	9603 C 4	9567 E 8	9543 C 6	9520 C 5	7786 B 9	5790 C 5	4671 E 6	3871 A 2	3791 D 8	3742 D 9	3684 D 9	3632 B 8	3565 E 2	3521 C 2	2843 D 3	2727 B 8
	9789 B 7	9604 B 4	9570 A 7	9544 C 4	9522 A 3	7862 A 5	5791 D 5	4672 E 6	3873 C 6	3792 D 8	3753 E 7	3686 D 9	3635 C 9	3566 E 2	3525 B 2	2844 D 3	2728 A 9

2558 D 3	2511 E 4	1740 E 6	0002 E 1								
2560 D 3	2512 D 4	1741 D 9	0003 B 1								
2561 E 3	2517 E 4	1743 D 7	0004 E 1								
2563 D 1	2518 D 4	1750 B 6	0007 A 1								
2564 D 1	2519 C 2	1820 B 2	1504 B 1								
2565 E 1	2520 C 2	1824 B 2	1505 C 2								
2566 E 1	2521 E 2	1825 A 4	1551 C 2								
2575 C 1	2523 E 2	1828 B 5	1552 C 3								
2576 C 1	2524 E 1	1829 A 6	1553 C 3								
2577 E 1	2525 E 2	1831 C 6	1554 C 1								
2578 E 1	2526 E 2	1832 C 6	1555 C 1								
2579 D 3	2529 E 1	1833 A 5	1556 D 1								
2580 D 3	2530 E 2	1834 E 5	1557 C 2								
2588 D 2	2537 E 2	2503 E 3	1558 D 1								
2637 C 9	2541 D 2	2504 D 3	1562 E 6								
2638 B 9	2542 B 2	2505 E 3	1711 A 9								
2641 C 7	2550 D 4	2506 D 4	1712 A 9								
2642 B 7	2552 D 2	2507 E 3	1713 C 8								
2647 C 7	2555 C 4	2508 D 4	1720 A 9								
	2556 C 4	2509 E 2	1730 A 8								

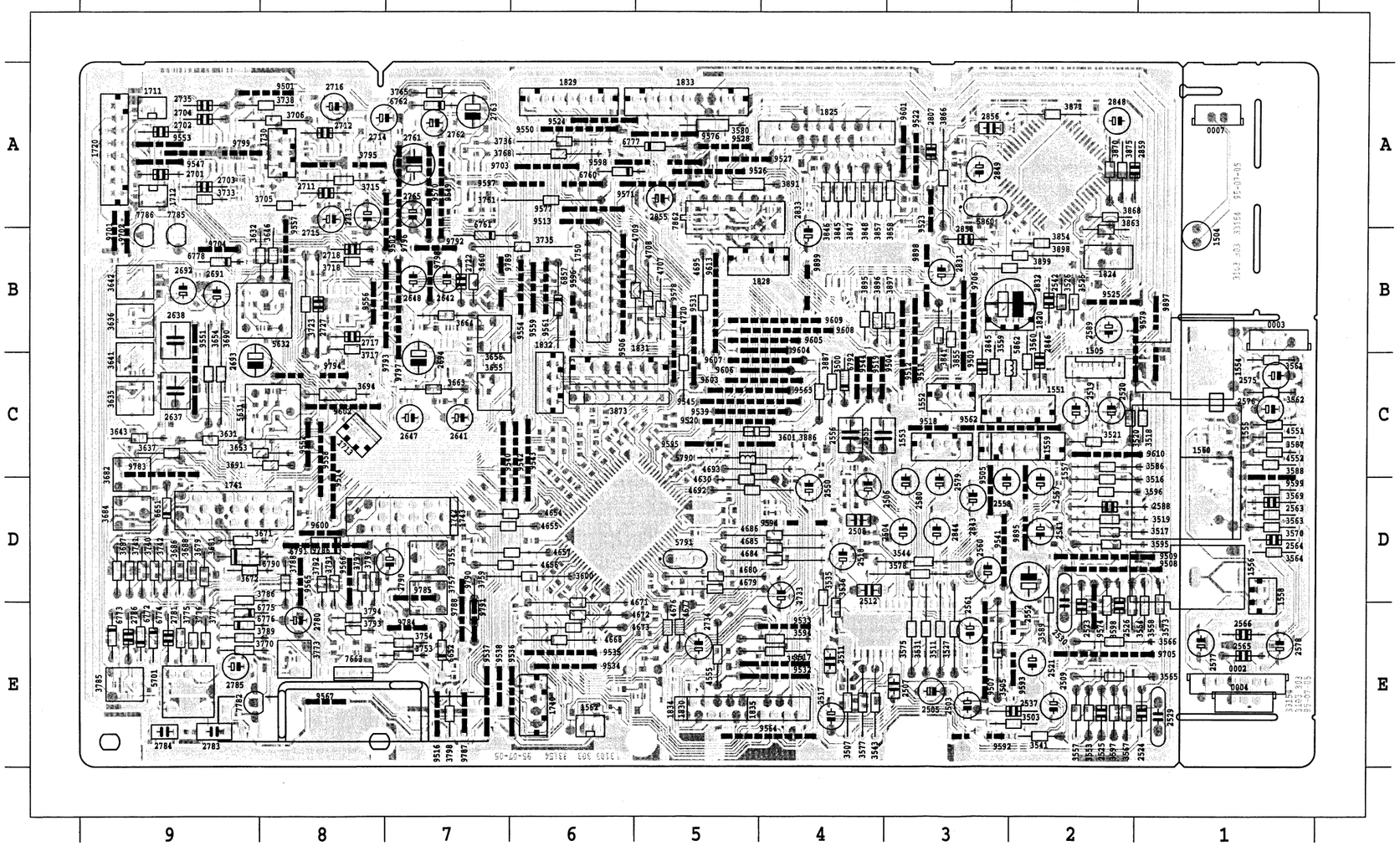

2501 E 2	2586 D 2	2729 A 7	3504 D 4	3551 E 2	3639 C 9	3685 D 9	3729 A 7	3774 E 5	3
2502 D 4	2631 C 9	2730 A 7	3506 E 3	3552 D 2	3640 B 9	3689 D 9	3730 A 7	3778 E 9	3
2513 E 4	2632 B 9	2731 A 7	3508 D 4	3555 E 2	3644 B 9	3692 C 9	3731 A 7	3779 E 9	3
2514 D 4	2633 C 8	2732 A 7	3509 E 1	3556 E 2	3645 C 8	3693 C 7	3732 A 7	3780 E 9	3
2515 D 2	2634 B 8	2737 A 8	3510 D 2	3568 E 2	3647 C 8	3695 C 7	3734 A 8	3782 E 9	3
2516 C 2	2635 C 8	2738 A 8	3512 D 3	3572 E 6	3648 B 9	3701 A 9	3737 A 9	3783 E 9	3
2527 E 2	2636 B 8	2752 E 9	3513 D 2	3574 D 2	3649 C 8	3702 A 9	3743 D 7	3784 E 9	3
2528 E 1	2639 C 7	2760 A 8	3514 C 2	3576 D 3	3650 B 9	3703 A 8	3744 D 7	3787 E 9	3
2531 E 2	2640 B 7	2782 E 9	3515 D 2	3581 C 2	3651 C 9	3704 A 8	3745 D 7	3790 D 7	3
2532 E 2	2643 C 7	2787 E 9	3522 C 2	3582 C 3	3652 B 8	3707 A 8	3746 D 7	3811 A 3	3
2533 D 2	2644 B 7	2794 C 5	3523 D 2	3583 E 1	3657 C 7	3708 A 8	3747 D 8	3842 B 2	3
2534 C 2	2645 C 7	2834 A 4	3524 D 2	3584 E 2	3658 B 7	3709 A 8	3748 D 8	3843 B 2	3
2535 E 3	2646 B 7	2835 A 4	3528 D 3	3585 D 2	3659 C 7	3710 A 8	3749 D 7	3844 A 2	3
2536 E 3	2705 A 8	2836 A 4	3529 D 2	3590 D 2	3661 C 7	3711 A 8	3750 D 7	3849 A 3	4
2538 C 4	2706 A 8	2837 A 4	3530 C 2	3591 E 1	3662 B 7	3712 A 8	3751 E 7	3850 A 3	4
2539 E 5	2707 A 8	2838 A 4	3532 D 3	3592 E 2	3665 C 7	3713 A 8	3752 E 7	3851 B 2	4
2540 D 4	2708 A 8	2839 A 3	3533 E 4	3599 B 2	3666 B 7	3714 A 7	3756 D 7	3852 B 3	4
2553 D 5	2709 A 8	2840 A 5	3534 E 4	3600 E 6	3670 D 9	3716 A 8	3758 E 7	3853 B 2	4
2559 E 3	2710 A 8	2841 A 3	3537 D 4	3605 E 5	3673 D 9	3719 B 8	3760 E 6	3856 A 3	4
2573 C 2	2719 C 8	2850 A 3	3538 D 4	3606 E 4	3674 D 9	3720 B 8	3762 A 5	3859 B 3	4
2574 C 2	2720 B 8	2851 A 3	3539 D 4	3607 D 4	3675 D 8	3721 C 8	3763 A 8	3860 A 3	4
2581 D 2	2721 B 8	2852 A 3	3540 C 4	3608 E 6	3676 D 8	3722 B 8	3764 A 7	3861 A 4	4
2582 C 2	2723 B 7	2857 B 3	3545 C 4	3609 E 6	3677 D 8	3725 B 8	3767 A 6	3862 A 3	4
2583 D 2	2724 B 8	2861 B 2	3547 E 2	3633 C 9	3678 D 8	3726 B 7	3769 A 7	3864 B 3	4
2584 C 2	2725 B 7	3501 E 2	3548 E 2	3634 B 9	3680 D 9	3727 A 7	3771 E 9	3865 B 3	4
2585 D 2	2726 B 7	3502 D 4	3549 D 5	3638 B 9	3683 C 9	3728 A 7	3772 E 8	3867 B 3	4

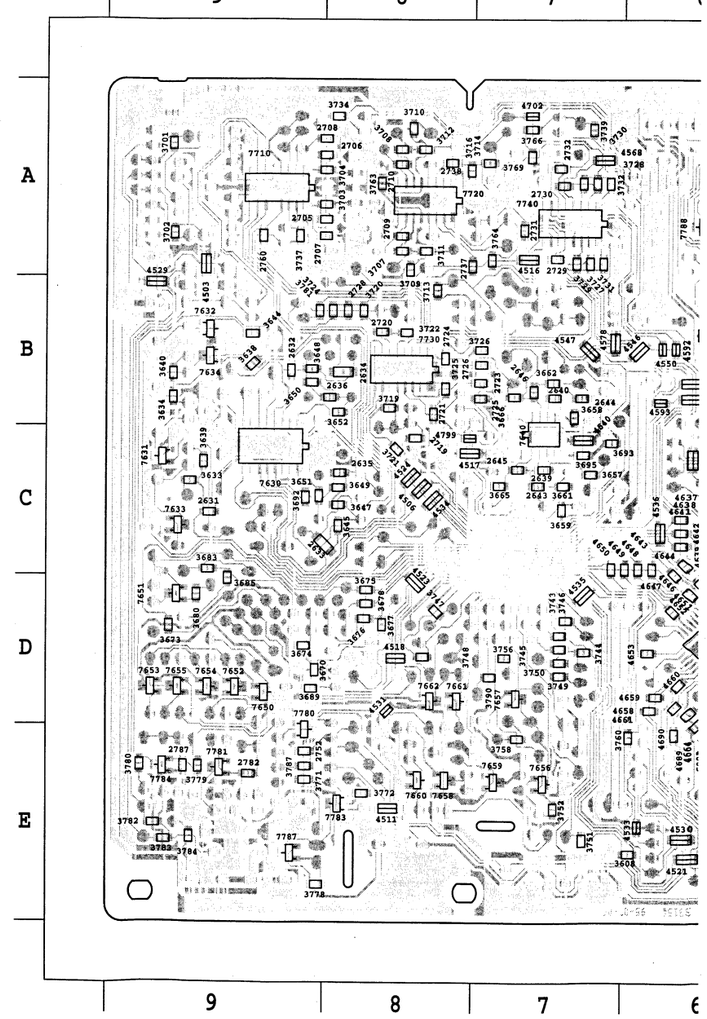

2	3526 B 2	2845 C 3	2733 D 4	2648 B 7	2557 D 2	2511 E 4	1740 E 6	0002 E 1
1	3527 E 3	2846 C 2	2734 E 5	2691 B 9	2558 D 3	2512 D 4	1741 D 9	0003 B 1
1	3531 E 3	2848 A 2	2735 A 9	2692 B 9	2560 D 3	2517 E 4	1743 D 7	0004 E 1
1	3535 D 4	2849 A 3	2761 A 7	2693 C 9	2561 E 3	2518 D 4	1750 B 6	0007 A 1
3	3536 E 4	2855 A 5	2762 A 7	2694 C 7	2563 D 1	2519 C 2	1820 B 2	1504 B 1
4	3541 E 2	2856 A 3	2763 A 7	2701 A 9	2564 D 1	2520 C 2	1824 B 2	1505 C 2
3	3543 E 4	2858 B 3	2765 A 7	2702 A 9	2565 E 1	2521 E 2	1825 A 4	1551 C 2
1	3544 D 3	2859 A 2	2780 E 8	2703 A 9	2566 E 1	2523 E 2	1828 B 5	1552 C 3
2	3553 E 2	3500 C 4	2781 E 9	2704 A 9	2575 C 1	2524 E 1	1829 A 6	1553 C 3
1	3554 E 2	3503 E 2	2783 E 9	2711 A 8	2576 C 1	2525 E 2	1831 C 6	1554 C 1
1	3557 E 2	3505 E 3	2784 E 9	2712 A 8	2577 E 1	2526 E 2	1832 C 6	1555 C 1
2	3558 E 1	3507 E 4	2785 E 9	2713 A 8	2578 E 1	2529 E 1	1833 A 5	1556 D 1
2	3559 C 3	3511 E 3	2786 E 9	2714 A 7	2579 D 3	2530 E 2	1834 E 5	1557 C 2
2	3560 C 2	3516 D 2	2790 D 7	2715 A 8	2580 D 3	2537 E 2	2503 E 3	1558 D 1
2	3561 C 1	3517 D 2	2807 A 3	2716 A 8	2588 D 2	2541 D 2	2504 D 3	1562 E 6
2	3562 C 1	3518 C 1	2831 B 3	2717 B 8	2637 C 9	2542 B 2	2505 E 3	1711 A 9
5	3563 D 1	3519 D 2	2832 B 2	2718 B 8	2638 B 9	2550 D 4	2506 D 4	1712 A 9
9	3564 D 1	3520 C 2	2833 B 4	2722 B 7	2641 C 7	2552 D 2	2507 E 3	1713 C 8
8	3565 E 2	3521 C 2	2843 D 3	2727 B 8	2642 B 7	2555 C 4	2508 D 4	1720 A 9
9	3566 E 2	3525 B 2	2844 D 3	2728 A 9	2647 C 7	2556 C 4	2509 E 2	1730 A 8

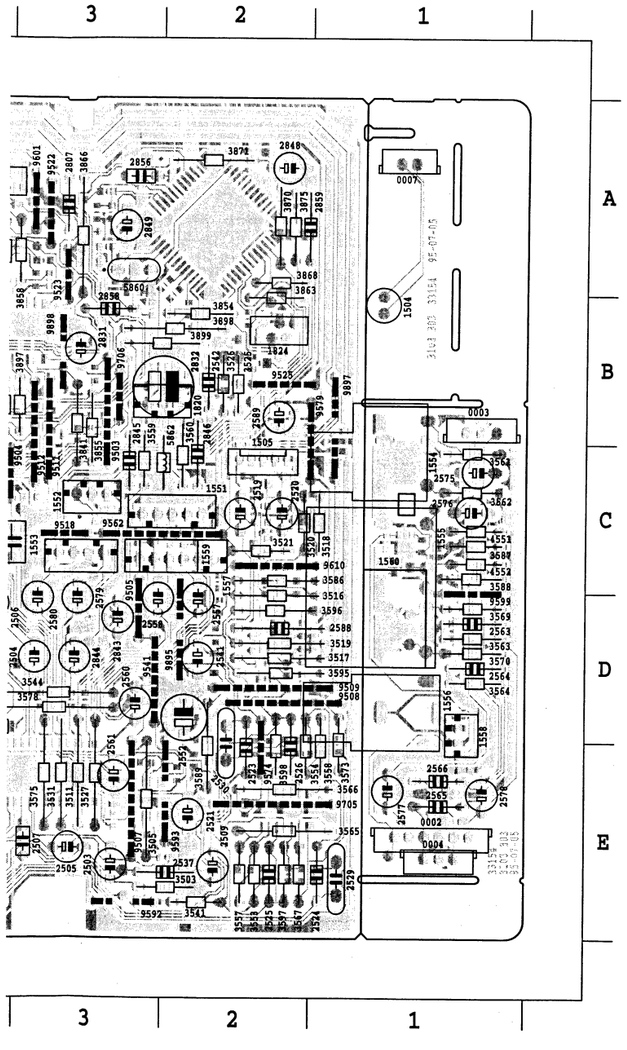

2501 E 2	2586 D 2	2729 A 7	3504 D 4	3551 E 2	3639 C 9	3685 D 9	3729 A 7	3774 E 5	3869 A 4	4525 D 2	4559 E 5	4640 C 6	4674 E 5	4716 C 5	7631 C 9	7783 E 8	T015 A 5	T042 C 2	T074 C 3	T114 D 8	T143 B 6
2502 D 4	2631 C 9	2730 A 7	3506 E 3	3552 D 2	3640 B 9	3689 D 9	3730 A 7	3778 E 9	3872 B 3	4526 E 5	4561 E 5	4641 C 6	4675 E 5	4718 E 5	7632 B 9	7784 E 9	T016 A 5	T043 A 3	T076 C 3	T115 D 8	T144 A 6
2513 E 4	2632 B 9	2731 A 7	3508 D 4	3555 E 2	3644 B 9	3692 C 9	3731 A 7	3779 E 9	3874 B 3	4527 E 4	4565 E 4	4642 C 6	4678 D 5	4719 E 5	7633 C 9	7787 E 9	T018 A 3	T045 C 2	T078 A 5	T116 D 9	T145 B 6
2514 D 4	2633 C 8	2732 A 7	3509 E 1	3556 E 2	3645 C 8	3693 C 7	3732 A 7	3780 E 9	3876 C 3	4529 B 9	4566 B 3	4643 C 6	4681 D 5	4721 C 5	7634 B 9	7788 A 6	T019 A 4	T046 C 1	T079 C 3	T117 C 9	T146 B 6
2515 D 2	2634 B 8	2737 A 8	3510 D 2	3568 E 2	3647 C 8	3695 C 7	3734 A 8	3782 E 9	3877 B 3	4530 E 6	4568 A 7	4644 C 6	4682 D 5	4723 C 8	7640 C 7	7820 A 4	T020 B 2	T047 A 6	T080 D 3	T118 D 9	T147 D 5
2516 C 2	2635 C 8	2738 A 8	3512 D 3	3572 E 6	3648 B 9	3701 A 9	3737 A 9	3783 E 9	3878 B 4	4531 D 8	4572 C 6	4645 C 6	4683 D 5	4724 B 8	7650 D 9	7850 B 4	T021 B 2	T048 B 6	T081 C 2	T119 D 9	T148 E 5
2527 E 2	2636 B 8	2752 E 9	3513 D 2	3574 D 2	3649 C 8	3702 A 9	3743 D 7	3784 E 9	3879 A 3	4533 E 6	4574 C 3	4646 D 6	4687 D 5	4799 C 8	7651 D 9	7851 E 6	T022 B 2	T049 A 3	T082 C 3	T120 D 9	T149 E 7
2528 E 1	2639 C 7	2760 A 8	3514 C 2	3576 D 3	3650 B 9	3703 A 8	3744 D 7	3787 E 9	3880 A 5	4534 C 8	4577 A 5	4647 D 6	4688 D 5	4801 B 2	7652 D 9	7852 B 2	T023 A 2	T050 B 3	T083 E 6	T121 D 9	T161 B 9
2531 E 2	2640 B 7	2782 E 9	3515 D 2	3581 C 2	3651 C 9	3704 A 8	3745 D 7	3790 D 7	3881 A 5	4535 D 7	4578 B 7	4648 C 6	4689 D 6	4802 A 3	7653 D 9	7853 B 2	T024 B 5	T051 A 5	T084 E 5	T122 D 9	T162 E 9
2532 E 2	2643 C 7	2787 E 9	3522 C 2	3582 C 3	3652 B 8	3707 A 8	3746 D 7	3811 A 3	3882 A 5	4536 C 6	4579 D 3	4649 C 6	4690 E 6	4803 A 3	7654 D 9	7856 B 3	T025 B 5	T052 A 6	T085 E 6	T123 D 9	T163 A 9
2533 D 2	2644 B 7	2794 C 5	3523 D 2	3583 E 1	3657 C 7	3708 A 8	3747 D 8	3842 B 2	3883 A 5	4537 A 5	4592 A 6	4650 C 7	4691 D 5	6551 E 4	7655 D 9	7860 A 2	T026 B 4	T053 A 6	T086 E 5	T124 D 9	T164 A 9
2534 C 2	2645 C 7	2834 A 4	3524 D 2	3584 E 2	3658 B 7	3709 A 8	3748 D 8	3843 B 2	3884 A 4	4538 B 6	4593 B 6	4651 C 6	4694 C 5	6552 D 4	7656 E 7	7861 B 3	T027 A 4	T054 A 6	T087 E 6	T125 D 7	T165 A 9
2535 E 3	2646 B 7	2835 A 4	3528 D 3	3585 D 2	3659 C 7	3710 A 8	3749 D 7	3844 A 2	3885 A 5	4540 C 7	4594 C 1	4652 D 6	4696 D 5	6553 E 4	7657 D 7	T001 A 4	T028 B 3	T055 B 2	T088 E 4	T126 D 7	T166 B 9
2536 E 3	2705 A 8	2836 A 4	3529 D 2	3590 D 2	3661 C 7	3711 A 8	3750 D 7	3849 A 3	4500 E 2	4541 B 6	4595 E 5	4653 D 6	4697 C 5	6554 D 4	7658 E 8	T002 A 3	T029 B 2	T056 A 5	T089 E 6	T127 E 7	T167 A 8
2538 C 4	2706 A 8	2837 A 4	3530 C 2	3591 E 1	3662 B 7	3712 A 8	3751 E 7	3850 A 3	4502 C 5	4542 B 6	4596 E 4	4658 D 6	4698 C 5	7501 D 2	7659 E 7	T003 A 3	T030 B 2	T057 A 5	T090 E 4	T128 D 7	T168 A 8
2539 E 5	2707 A 8	2838 A 4	3532 D 3	3592 E 2	3665 C 7	3713 A 8	3752 E 7	3851 B 2	4503 A 9	4543 A 5	4597 E 5	4659 D 6	4699 C 5	7502 D 4	7660 E 8	T004 A 4	T031 C 6	T059 A 5	T091 E 6	T129 E 7	T169 A 8
2540 D 4	2708 A 8	2839 A 3	3533 E 4	3599 B 2	3666 B 7	3714 A 7	3756 D 7	3852 B 3	4506 C 8	4545 B 1	4599 E 4	4660 D 6	4700 C 5	7503 C 2	7661 D 8	T005 A 3	T032 B 3	T061 E 3	T092 E 4	T130 D 7	T170 E 8
2553 D 5	2709 A 8	2840 A 5	3534 E 4	3600 E 6	3670 D 9	3716 A 8	3758 E 7	3853 B 2	4510 B 1	4546 B 6	4631 E 5	4661 E 6	4701 C 5	7504 C 2	7662 D 8	T006 A 4	T033 C 6	T062 E 4	T093 E 1	T131 E 7	T171 A 7
2559 E 3	2710 A 8	2841 A 3	3537 D 4	3605 E 5	3673 D 9	3719 B 8	3760 E 6	3856 A 3	4511 E 8	4547 B 7	4632 C 6	4662 D 5	4702 A 7	7505 E 2	7690 D 6	T007 A 4	T034 C 5	T063 A 5	T094 E 1	T132 D 8	T172 B 7
2573 C 2	2719 C 8	2850 A 3	3538 D 4	3606 E 4	3674 D 9	3720 B 8	3762 A 5	3859 B 3	4516 A 7	4548 C 2	4633 C 6	4663 D 5	4703 C 5	7506 E 2	7701 C 5	T008 A 4	T035 C 5	T064 E 5	T095 C 1	T133 E 7	T173 C 9
2574 C 2	2720 B 8	2851 A 3	3539 D 4	3607 D 4	3675 D 8	3721 C 8	3763 A 8	3860 A 3	4517 C 8	4549 B 3	4634 C 6	4664 D 6	4704 B 6	7507 E 3	7710 A 9	T009 A 3	T036 C 5	T065 E 5	T096 C 1	T134 D 8	T174 B 9
2581 D 2	2721 B 8	2852 A 3	3540 C 4	3608 E 6	3676 D 8	3722 B 8	3764 A 7	3861 A 4	4518 D 8	4550 B 6	4635 C 6	4665 E 6	4705 A 6	7508 C 1	7720 A 8	T010 A 4	T037 C 5	T066 E 3	T097 D 1	T135 E 8	T175 C 8
2582 C 2	2723 B 7	2857 B 3	3545 C 4	3609 E 6	3677 D 8	3725 B 8	3767 A 6	3862 A 3	4520 D 4	4553 C 1	4636 C 6	4666 D 6	4710 B 5	7509 C 1	7730 B 8	T011 A 4	T038 C 6	T067 E 3	T098 D 1	T139 B 6	T176 C 9
2583 D 2	2724 B 8	2861 B 2	3547 E 2	3633 C 9	3678 D 8	3726 B 7	3769 A 7	3864 B 3	4521 E 6	4554 C 1	4637 C 6	4667 E 6	4711 B 6	7512 C 4	7740 A 7	T012 A 4	T039 C 6	T068 E 5	T099 E 1	T140 B 6	T177 B 5
2584 C 2	2725 B 7	3501 E 2	3548 E 2	3634 B 9	3680 D 9	3727 A 7	3771 E 9	3865 B 3	4523 D 8	4557 E 6	4638 C 6	4669 E 6	4712 B 5	7553 E 3	7780 E 9	T013 A 4	T040 C 6	T072 D 2	T100 E 6	T141 B 6	
2585 D 2	2726 B 7	3502 D 4	3549 D 5	3638 B 9	3683 C 9	3728 A 7	3772 E 8	3867 B 3	4524 C 8	4558 E 6	4639 C 6	4670 E 6	4713 B 5	7630 C 9	7781 E 9	T014 B 3	T041 C 6	T073 B 2	T113 D 8	T142 A 5	

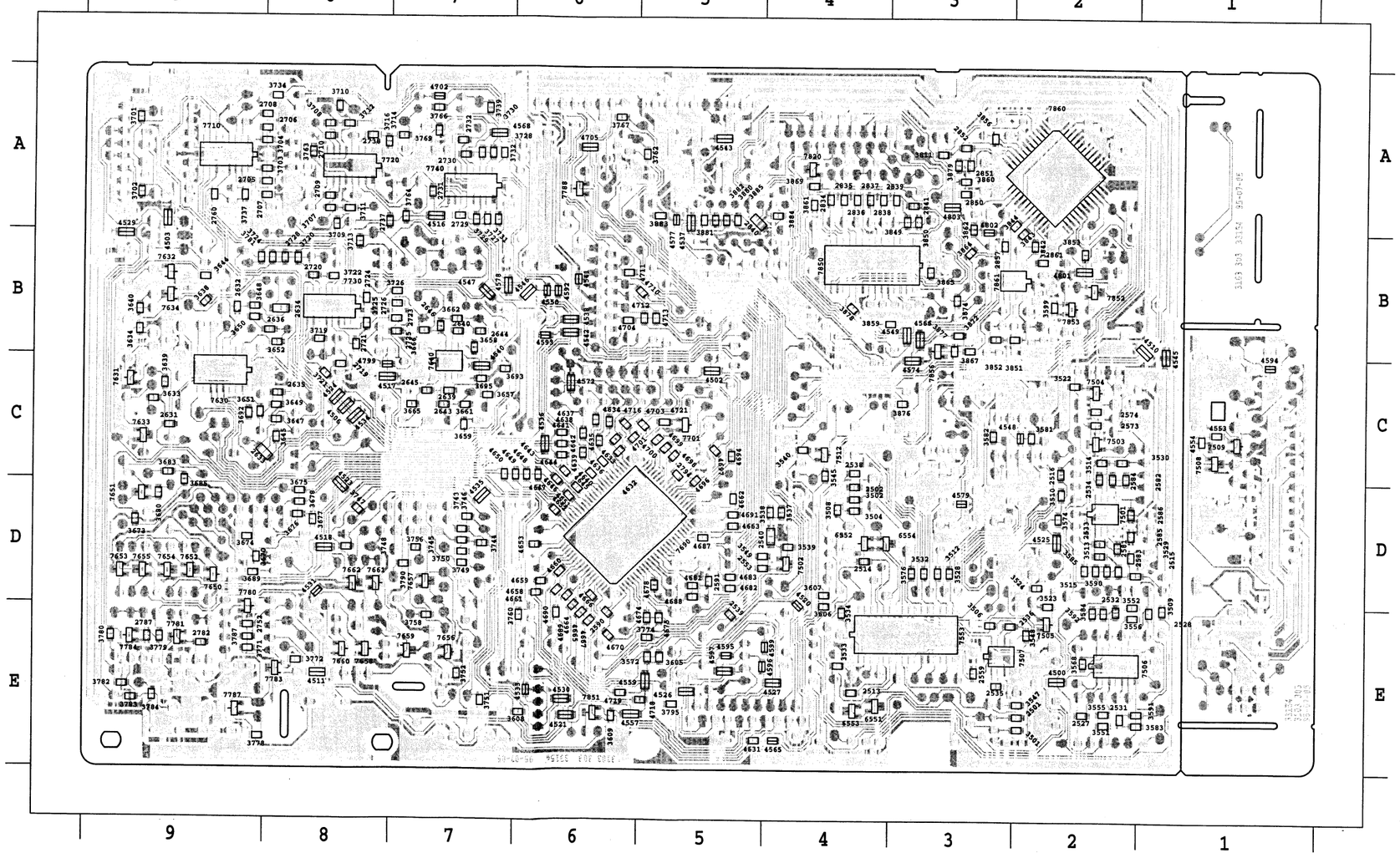

9-9

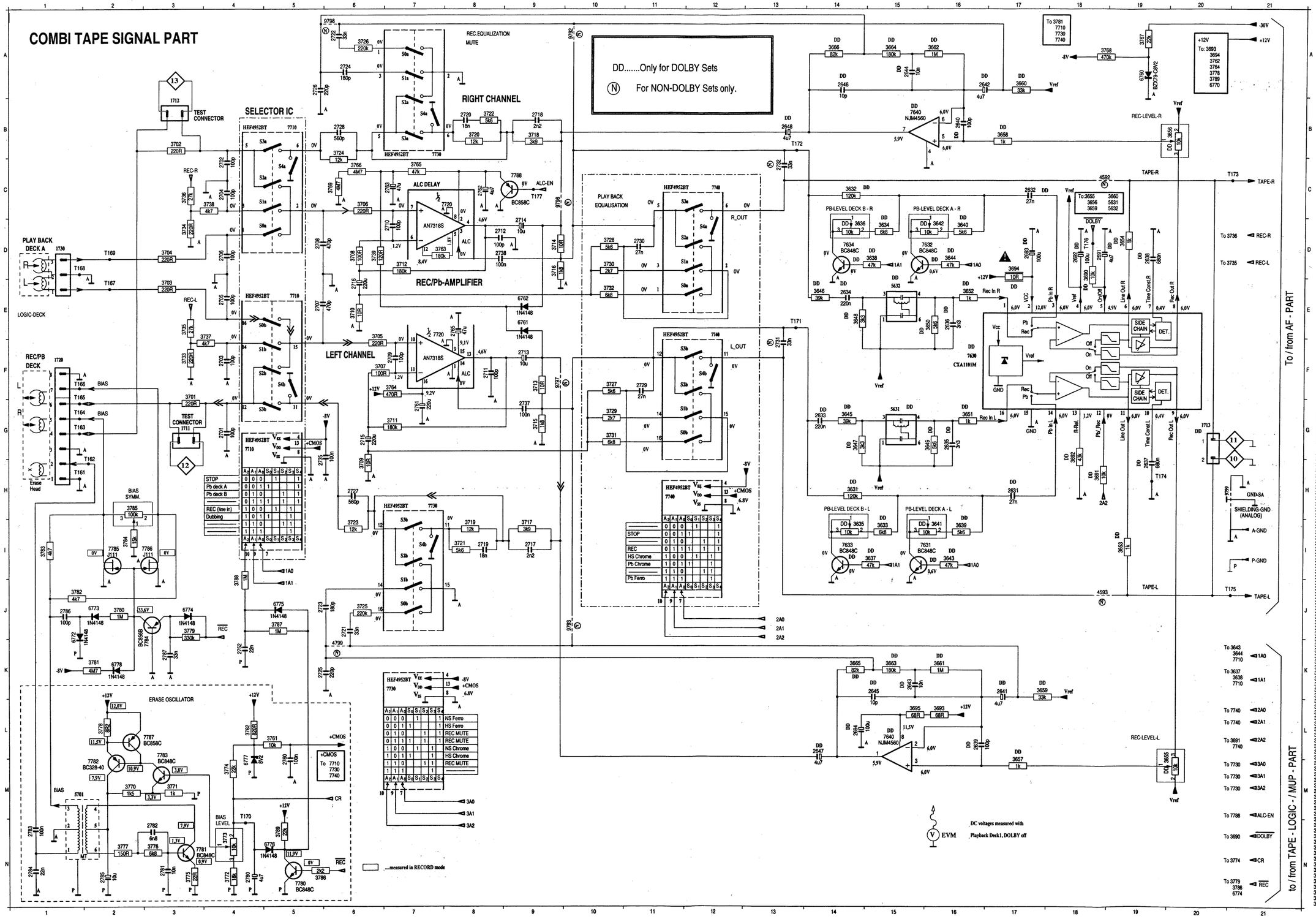
COMBI TAPE SIGNAL PART
DD.....Only for DOLBY Sets
(N) For NON-DOLBY Sets only.
RIGHT CHANNEL
LEFT CHANNEL
SELECTOR IC
REC/Pb-AMPLIFIER
PLAY BACK DECK A
REC/PB DECK
LOGIC-DECK
TEST CONNECTOR
ERASE OSCILLATOR
PLAY BACK EQUALISATION
REC.EQUALIZATION MUTE
ALC DELAY
REC-LEVEL-R
REC-LEVEL-L
TAPE-R
TAPE-L
To / from AF - PART
to / from TAPE - LOGIC - / MUP - PART
DC voltages measured with Playback Deck1, DOLBY off
...measured in RECORD mode

9-10

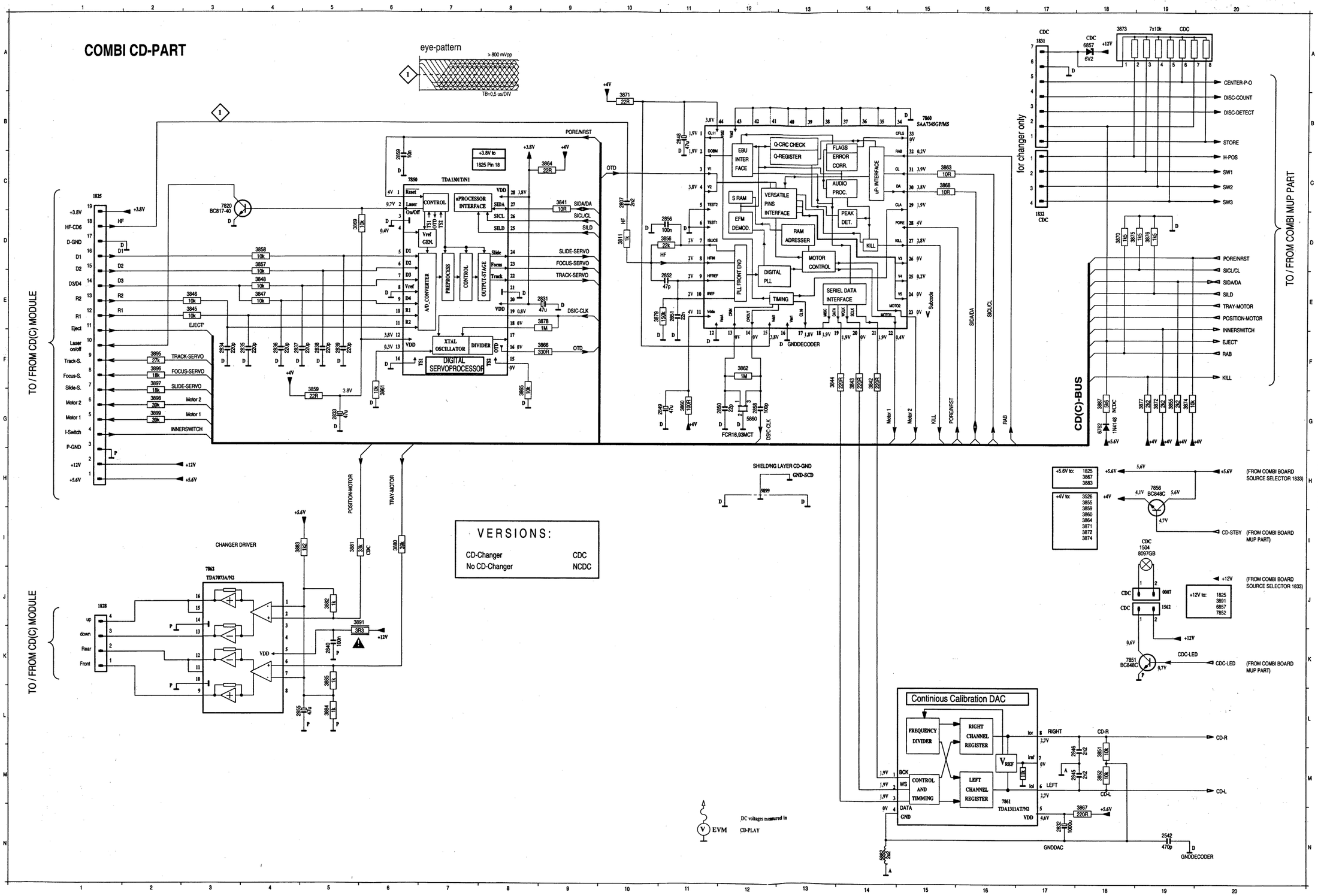
COMBI CD-PART
eye-pattern
TB=0,5 us/DIV
TO / FROM CD(C) MODULE
TO / FROM COMBI MUP PART
CD(C)-BUS
for changer only
TDA1301T/N1
DIGITAL SERVOPROCESSOR
SAA7345GP/M5
GNDDECODER
CHANGER DRIVER
TDA7073A/N2
VERSIONS:
CD-Changer CDC
No CD-Changer NCDC
Continious Calibration DAC
TDA1311AT/N2
SHIELDING LAYER CD-GND
EVM
DC voltages measured in CD-PLAY
(FROM COMBI BOARD SOURCE SELECTOR 1833)
(FROM COMBI BOARD MUP PART)

2501 E 2	2586 D 2	2729 A 7	3504 D 4	3551 E 2	3639 C 9	3685 D 9	3729 A 7	3774 E 5	3869 A 4	4525 D 2	4559 E 5	4640 C 6	4674 E 5	4716 C 5	7631 C 9	7783 E 8	T015 A 5	T042 C 2	T074 C 3	T114 D 8	T143 B 6
2502 D 4	2631 C 9	2730 A 7	3506 E 3	3552 D 2	3640 B 9	3689 D 9	3730 A 7	3778 E 9	3872 B 3	4526 E 5	4561 E 5	4641 C 6	4675 E 5	4718 E 5	7632 B 9	7784 E 9	T016 A 5	T043 A 3	T076 C 3	T115 D 8	T144 A 6
2513 E 4	2632 B 9	2731 A 7	3508 D 4	3555 E 2	3644 B 9	3692 C 9	3731 A 7	3779 E 9	3874 B 3	4527 E 4	4565 E 4	4642 C 6	4678 D 5	4719 E 5	7633 C 9	7787 E 9	T018 A 3	T045 C 2	T078 A 5	T116 D 9	T145 B 6
2514 D 4	2633 C 8	2732 A 7	3509 E 1	3556 E 2	3645 C 8	3693 C 7	3732 A 7	3780 E 9	3876 C 3	4529 B 9	4566 B 3	4643 C 6	4681 D 5	4721 C 5	7634 B 9	7788 A 6	T019 A 4	T046 C 1	T079 C 3	T117 C 9	T146 B 6
2515 D 2	2634 B 8	2737 A 8	3510 D 2	3568 E 2	3647 C 8	3695 C 7	3734 A 8	3782 E 9	3877 B 3	4530 E 6	4568 A 7	4644 C 6	4682 D 5	4723 C 8	7640 C 7	7820 A 4	T020 B 2	T047 A 6	T080 D 3	T118 D 9	T147 D 5
2516 C 2	2635 C 8	2738 A 8	3512 D 3	3572 E 6	3648 B 9	3701 A 9	3737 A 9	3783 E 9	3878 B 4	4531 D 8	4572 C 6	4645 C 6	4683 D 5	4724 B 8	7650 D 9	7850 B 4	T021 B 2	T048 B 6	T081 C 2	T119 D 9	T148 E 5
2527 E 2	2636 B 8	2752 E 9	3513 D 2	3574 D 2	3649 C 8	3702 A 9	3743 D 7	3784 E 9	3879 A 3	4533 E 6	4574 C 3	4646 D 6	4687 D 5	4799 C 8	7651 D 9	7851 E 6	T022 B 2	T049 A 3	T082 C 3	T120 D 9	T149 E 7
2528 E 1	2639 C 7	2760 A 8	3514 C 2	3576 D 3	3650 B 9	3703 A 8	3744 D 7	3787 E 9	3880 A 5	4534 C 8	4577 A 5	4647 D 6	4688 D 5	4801 B 2	7652 D 9	7852 B 2	T023 A 2	T050 B 3	T083 E 6	T121 D 9	T161 B 9
2531 E 2	2640 B 7	2782 E 9	3515 D 2	3581 C 2	3651 C 9	3704 A 8	3745 D 7	3790 D 7	3881 A 5	4535 D 7	4578 B 7	4648 C 6	4689 D 6	4802 A 3	7653 D 9	7853 B 2	T024 B 5	T051 A 5	T084 E 5	T122 D 9	T162 E 9
2532 E 2	2643 C 7	2787 E 9	3522 C 2	3582 C 3	3652 B 8	3707 A 8	3746 D 7	3811 A 3	3882 A 5	4536 C 6	4579 D 3	4649 C 6	4690 E 6	4803 A 3	7654 D 9	7856 B 3	T025 B 5	T052 A 6	T085 E 6	T123 D 9	T163 A 9
2533 D 2	2644 B 7	2794 C 5	3523 D 2	3583 E 1	3657 C 7	3708 A 8	3747 D 8	3842 B 2	3883 A 5	4537 A 5	4592 A 6	4650 C 7	4691 D 5	6551 E 4	7655 D 9	7860 A 2	T026 B 4	T053 A 6	T086 E 5	T124 D 9	T164 A 9
2534 C 2	2645 C 7	2834 A 4	3524 D 2	3584 E 2	3658 B 7	3709 A 8	3748 D 8	3843 B 2	3884 A 4	4538 B 6	4593 B 6	4651 C 6	4694 C 5	6552 D 4	7656 E 7	7861 B 3	T027 A 4	T054 A 6	T087 E 6	T125 D 7	T165 A 9
2535 E 3	2646 B 7	2835 A 4	3528 D 3	3585 D 2	3659 C 7	3710 A 8	3749 D 7	3844 A 2	3885 A 5	4540 C 7	4594 C 1	4652 D 6	4696 D 5	6553 E 4	7657 D 7	T001 A 4	T028 B 3	T055 B 2	T088 E 4	T126 D 7	T166 B 9
2536 E 3	2705 A 8	2836 A 4	3529 D 2	3590 D 2	3661 C 7	3711 A 8	3750 D 7	3849 A 3	4500 E 2	4541 B 6	4595 E 5	4653 D 6	4697 C 5	6554 D 4	7658 E 8	T002 A 3	T029 B 2	T056 A 5	T089 E 6	T127 E 7	T167 A 8
2538 C 4	2706 A 8	2837 A 4	3530 C 2	3591 E 1	3662 B 7	3712 A 8	3751 E 7	3850 A 3	4502 C 5	4542 B 6	4596 E 4	4658 D 6	4698 C 5	7501 D 2	7659 E 7	T003 A 3	T030 B 2	T057 A 5	T090 E 4	T128 D 7	T168 A 8
2539 E 5	2707 A 8	2838 A 4	3532 D 3	3592 E 2	3665 C 7	3713 A 8	3752 E 7	3851 B 2	4503 A 9	4543 A 5	4597 E 5	4659 D 6	4699 C 5	7502 D 4	7660 E 8	T004 A 4	T031 C 6	T059 A 5	T091 E 6	T129 E 7	T169 A 8
2540 D 4	2708 A 8	2839 A 3	3533 E 4	3599 B 2	3666 B 7	3714 A 7	3756 D 7	3852 B 3	4506 C 8	4545 B 1	4599 E 4	4660 D 6	4700 C 5	7503 C 2	7661 D 8	T005 A 3	T032 B 3	T061 E 3	T092 E 4	T130 D 7	T170 E 8
2553 D 5	2709 A 8	2840 A 5	3534 E 4	3600 E 6	3670 D 9	3716 A 8	3758 E 7	3853 B 2	4510 B 1	4546 B 6	4631 E 5	4661 E 6	4701 C 5	7504 C 2	7662 D 8	T006 A 4	T033 C 6	T062 E 4	T093 E 1	T131 E 7	T171 A 7
2559 E 3	2710 A 8	2841 A 3	3537 D 4	3605 E 5	3673 D 9	3719 B 8	3760 E 6	3856 A 3	4511 E 8	4547 B 7	4632 C 6	4662 D 5	4702 A 7	7505 E 2	7690 D 6	T007 A 4	T034 C 5	T063 A 5	T094 E 1	T132 D 8	T172 B 7
2573 C 2	2719 C 8	2850 A 3	3538 D 4	3606 E 4	3674 D 9	3720 B 8	3762 A 5	3859 B 3	4516 A 7	4548 C 2	4633 C 6	4663 D 5	4703 C 5	7506 E 2	7701 C 5	T008 A 4	T035 C 5	T064 E 5	T095 C 1	T133 E 7	T173 C 9
2574 C 2	2720 B 8	2851 A 3	3539 D 4	3607 D 4	3675 D 8	3721 C 8	3763 A 8	3860 A 3	4517 C 8	4549 B 3	4634 C 6	4664 D 6	4704 B 6	7507 E 3	7710 A 9	T009 A 3	T036 C 5	T065 E 5	T096 C 1	T134 D 8	T174 B 9
2581 D 2	2721 B 8	2852 A 3	3540 C 4	3608 E 6	3676 D 8	3722 B 8	3764 A 7	3861 A 4	4518 D 8	4550 B 6	4635 C 6	4665 E 6	4705 A 6	7508 C 1	7720 A 8	T010 A 4	T037 C 5	T066 E 3	T097 D 1	T135 E 8	T175 C 8
2582 C 2	2723 B 7	2857 B 3	3545 C 4	3609 E 6	3677 D 8	3725 B 8	3767 A 6	3862 A 3	4520 D 4	4553 C 1	4636 C 6	4666 D 6	4710 B 5	7509 C 1	7730 B 8	T011 A 4	T038 C 6	T067 E 3	T098 D 1	T139 B 6	T176 C 9
2583 D 2	2724 B 8	2861 B 2	3547 E 2	3633 C 9	3678 D 8	3726 B 7	3769 A 7	3864 B 3	4521 E 6	4554 C 1	4637 C 6	4667 E 6	4711 B 6	7512 C 4	7740 A 7	T012 A 4	T039 C 6	T068 E 5	T099 E 1	T140 B 6	T177 B 5
2584 C 2	2725 B 7	3501 E 2	3548 E 2	3634 B 9	3680 D 9	3727 A 7	3771 E 9	3865 B 3	4523 D 8	4557 E 6	4638 C 6	4669 E 6	4712 B 5	7553 E 3	7780 E 9	T013 A 4	T040 C 6	T072 D 2	T100 E 6	T141 B 6	
2585 D 2	2726 B 7	3502 D 4	3549 D 5	3638 B 9	3683 C 9	3728 A 7	3772 E 8	3867 B 3	4524 C 8	4558 E 6	4639 C 6	4670 E 6	4713 B 5	7630 C 9	7781 E 9	T014 B 3	T041 C 6	T073 B 2	T113 D 8	T142 A 5	

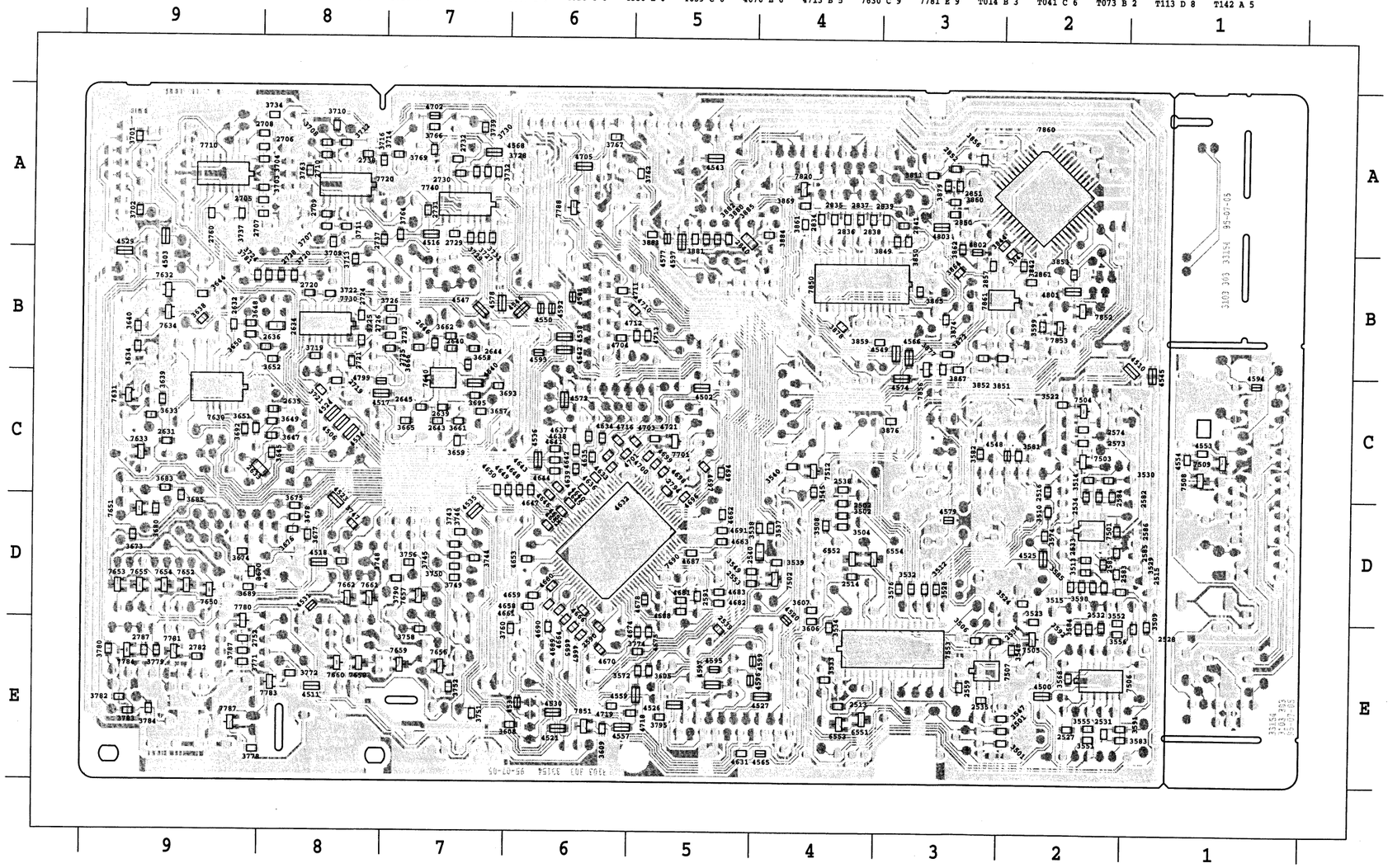

9-11

9790 E 7	9605 B 4	9571 A 5	9545 C 5	9523 A 3	9501 A 8	5860 A 3	4673 E 6	3
9791 E 7	9606 C 4	9574 E 2	9547 A 9	9524 A 6	9502 A 7	6651 D 9	4676 E 5	3
9792 B 7	9607 C 4	9576 A 5	9549 A 7	9525 B 2	9503 B 3	6652 E 7	4677 E 5	3
9793 B 7	9608 B 4	9577 A 6	9550 A 6	9526 A 5	9504 C 4	6760 A 6	4679 D 5	3
9794 C 8	9609 B 4	9578 B 5	9551 C 9	9527 A 5	9505 D 3	6772 E 9	4680 D 5	3
9795 A 8	9610 C 2	9579 A 5	9552 C 8	9528 A 5	9506 B 6	6773 E 9	4684 D 4	3
9796 A 7	9613 B 5	9581 E 4	9553 A 9	9531 B 5	9507 E 3	6774 E 9	4685 D 4	3
9797 B 7	9701 B 9	9592 E 3	9554 B 6	9532 E 4	9508 D 2	6775 E 9	4686 D 4	3
9798 B 7	9702 B 9	9593 E 2	9556 B 8	9533 E 4	9509 D 2	6776 E 9	4692 D 5	3
9799 A 9	9703 A 6	9594 D 4	9557 B 8	9534 E 6	9511 B 3	6777 A 5	4693 C 4	4
9895 D 2	9704 B 9	9595 C 5	9558 C 8	9535 E 6	9512 B 3	6778 B 9	4695 B 5	4
9896 C 2	9705 E 2	9596 B 6	9559 B 6	9536 E 6	9513 A 6	6790 D 9	4707 B 5	4
9897 B 1	9706 B 3	9597 A 6	9561 B 6	9537 E 7	9514 C 8	6791 D 8	4708 B 5	4
9898 B 3	9783 C 9	9598 A 5	9562 C 2	9538 E 7	9515 E 4	6792 C 4	4709 B 5	4
9899 B 4	9784 E 7	9599 D 1	9563 C 5	9539 C 5	9516 E 7	6857 B 6	4720 C 5	4
	9785 D 7	9600 D 8	9564 E 4	9540 C 7	9517 E 4	7663 E 8	5631 C 8	4
	9786 D 8	9601 A 3	9565 D 8	9541 D 3	9518 C 3	7782 E 9	5632 B 8	4
	9787 E 7	9602 C 8	9566 D 8	9542 C 6	9519 C 4	7785 B 9	5701 E 9	4
	9788 E 7	9603 C 4	9567 E 8	9543 C 6	9520 C 5	7786 B 9	5790 C 5	4
	9789 B 7	9604 B 4	9570 A 7	9544 C 4	9522 A 3	7862 A 5	5791 D 5	4

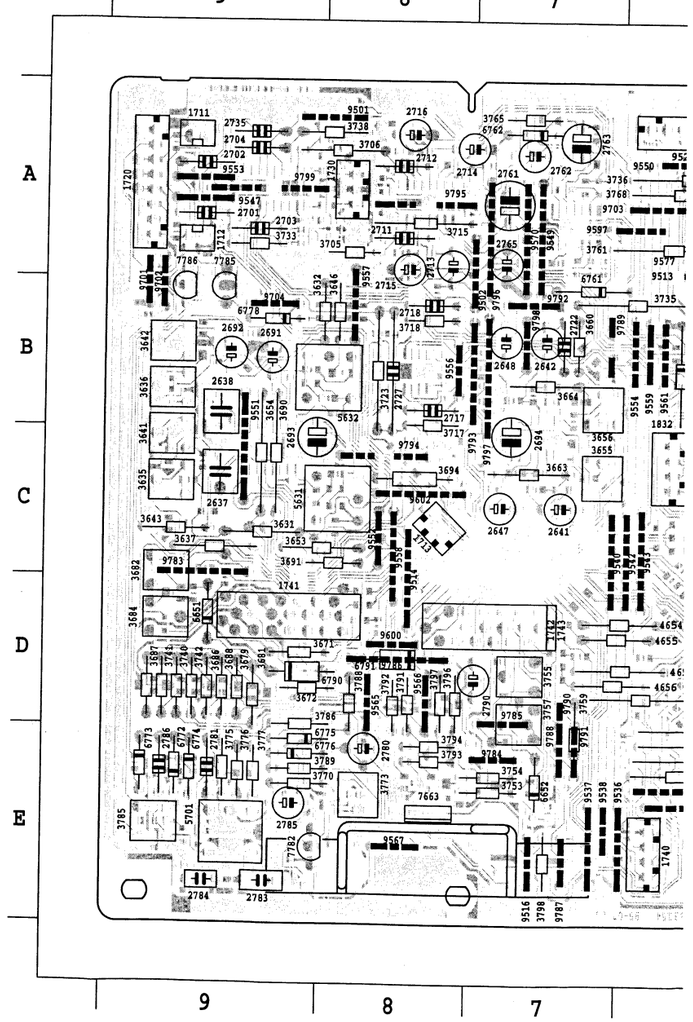

9-11

4674 E 5	4716 C 5	7631 C 9	7783 E 8	T015 A 5	T042 C 2	T074 C 3	T114 D 8	T143 B 6
4675 E 5	4718 E 5	7632 B 9	7784 E 9	T016 A 5	T043 A 3	T076 C 3	T115 D 8	T144 A 6
4678 D 5	4719 E 5	7633 C 9	7787 E 9	T018 A 3	T045 C 2	T078 A 5	T116 D 9	T145 B 6
4681 D 5	4721 C 5	7634 B 9	7788 A 6	T019 A 4	T046 C 1	T079 C 3	T117 C 9	T146 B 6
4682 D 5	4723 C 8	7640 C 7	7820 A 4	T020 B 2	T047 A 6	T080 D 3	T118 D 9	T147 D 5
4683 D 5	4724 B 8	7650 D 9	7850 B 4	T021 B 2	T048 B 6	T081 C 2	T119 D 9	T148 E 5
4687 D 5	4799 C 8	7651 D 9	7851 E 6	T022 B 2	T049 A 3	T082 C 3	T120 D 9	T149 E 7
4688 D 5	4801 B 2	7652 D 9	7852 B 2	T023 A 2	T050 B 3	T083 E 6	T121 D 9	T161 B 9
4689 D 6	4802 A 3	7653 D 9	7853 B 2	T024 B 5	T051 A 5	T084 E 5	T122 D 9	T162 E 9
4690 E 6	4803 A 3	7654 D 9	7856 B 3	T025 B 5	T052 A 6	T085 E 6	T123 D 9	T163 A 9
4691 D 5	6551 E 4	7655 D 9	7860 A 2	T026 B 4	T053 A 6	T086 E 5	T124 D 9	T164 A 9
4694 C 5	6552 D 4	7656 E 7	7861 B 3	T027 A 4	T054 A 6	T087 E 6	T125 D 7	T165 A 9
4696 D 5	6553 E 4	7657 D 7	T001 A 4	T028 B 3	T055 B 2	T088 E 4	T126 D 7	T166 B 9
4697 C 5	6554 D 4	7658 E 8	T002 A 3	T029 B 2	T056 A 5	T089 E 6	T127 E 7	T167 A 8
4698 C 5	7501 D 2	7659 E 7	T003 A 3	T030 B 2	T057 A 5	T090 E 4	T128 D 7	T168 A 8
4699 C 5	7502 D 4	7660 E 8	T004 A 4	T031 C 6	T059 A 5	T091 E 6	T129 E 7	T169 A 8
4700 C 5	7503 C 2	7661 D 8	T005 A 3	T032 B 3	T061 E 3	T092 E 4	T130 D 7	T170 E 8
4701 C 5	7504 C 2	7662 D 8	T006 A 4	T033 C 6	T062 E 4	T093 E 1	T131 E 7	T171 A 7
4702 A 7	7505 E 2	7690 D 6	T007 A 4	T034 C 5	T063 A 5	T094 E 1	T132 D 8	T172 B 7
4703 C 5	7506 E 2	7701 C 5	T008 A 4	T035 C 5	T064 E 5	T095 C 1	T133 E 7	T173 C 9
4704 B 6	7507 E 3	7710 A 9	T009 A 3	T036 C 5	T065 E 5	T096 C 1	T134 D 8	T174 B 9
4705 A 6	7508 C 1	7720 A 8	T010 A 4	T037 C 5	T066 E 3	T097 D 1	T135 E 8	T175 C 8
4710 B 5	7509 C 1	7730 B 8	T011 A 4	T038 C 6	T067 E 3	T098 D 1	T139 B 6	T176 C 9
4711 B 6	7512 C 4	7740 A 7	T012 A 4	T039 C 6	T068 E 5	T099 E 1	T140 B 6	T177 B 5
4712 B 5	7553 E 3	7780 E 9	T013 A 4	T040 C 6	T072 D 2	T100 E 6	T141 B 6	
4713 B 5	7630 C 9	7781 E 9	T014 B 3	T041 C 6	T073 B 2	T113 D 8	T142 A 5	

9790 E 7	9605 B 4	9571 A 5	9545 C 5	9523 A 3	9501 A 8	5860 A 3	4673 E 6	3875 A 2	3793 E 8	3754 E 7	3687 D 9	3636 B 9	3567 E 2	3526 B 2	2845 C 3	2733 D 4	2648 B 7	2557 D 2	2511 E 4	1740 E 6	0002 E 1
9791 E 7	9606 C 4	9574 E 2	9547 A 9	9524 A 6	9502 A 7	6651 D 9	4676 E 5	3886 C 5	3794 E 8	3755 D 7	3688 D 9	3637 C 9	3569 D 1	3527 E 3	2846 C 2	2734 E 5	2691 B 9	2558 D 3	2512 D 4	1741 D 9	0003 B 1
9792 B 7	9607 C 4	9576 A 5	9549 A 7	9525 B 2	9503 B 3	6652 E 7	4677 E 5	3887 C 4	3796 D 8	3757 D 7	3690 C 9	3641 C 9	3570 D 1	3531 E 3	2848 A 2	2735 A 9	2692 B 9	2560 D 3	2517 E 4	1743 D 7	0004 E 1
9793 B 7	9608 B 4	9577 A 6	9550 A 6	9526 A 5	9504 C 4	6760 A 6	4679 D 5	3891 A 5	3797 D 8	3759 E 7	3691 C 8	3642 B 9	3573 E 1	3535 D 4	2849 A 3	2761 A 7	2693 C 9	2561 E 3	2518 D 4	1750 B 6	0007 A 1
9794 C 8	9609 B 4	9578 B 5	9551 C 9	9527 A 5	9505 D 3	6772 E 9	4680 D 5	3895 B 4	3798 E 7	3761 A 6	3694 C 8	3643 C 9	3575 E 3	3536 E 4	2855 A 5	2762 A 7	2694 C 7	2563 D 1	2519 C 2	1820 B 2	1504 B 1
9795 A 8	9610 C 2	9579 A 5	9552 C 8	9528 A 5	9506 B 6	6773 E 9	4684 D 4	3896 B 4	3841 B 3	3765 A 7	3705 A 8	3646 B 8	3577 E 4	3541 E 2	2856 A 3	2763 A 7	2701 A 9	2564 D 1	2520 C 2	1824 B 2	1505 C 2
9796 A 7	9613 B 5	9581 E 4	9553 A 9	9531 B 5	9507 E 3	6774 E 9	4685 D 4	3897 B 3	3845 A 4	3766 A 7	3706 A 8	3653 C 8	3578 D 3	3543 E 4	2858 B 3	2765 A 7	2702 A 9	2565 E 1	2521 E 2	1825 A 4	1551 C 2
9797 B 7	9701 B 9	9592 E 3	9554 B 6	9532 E 4	9508 D 2	6775 E 9	4686 D 4	3898 B 2	3846 A 4	3768 A 6	3715 A 8	3654 C 9	3580 B 1	3544 D 3	2859 A 2	2780 E 8	2703 A 9	2566 E 1	2523 E 2	1828 B 5	1552 C 3
9798 B 7	9702 B 9	9593 E 2	9556 B 8	9533 E 4	9509 D 2	6776 E 9	4692 D 5	3899 B 3	3847 A 4	3770 E 9	3717 B 8	3655 C 7	3586 C 2	3553 E 2	3500 C 4	2781 E 9	2704 A 9	2575 C 1	2524 E 1	1829 A 6	1553 C 3
9799 A 9	9703 A 6	9594 D 4	9557 B 8	9534 E 6	9511 B 3	6777 A 5	4693 C 4	4551 C 1	3848 A 4	3773 E 8	3718 B 8	3656 B 7	3587 C 1	3554 E 2	3503 E 2	2783 E 9	2711 A 8	2576 C 1	2525 E 2	1831 C 6	1554 C 1
9895 D 2	9704 B 9	9595 C 5	9558 C 8	9535 E 6	9512 B 3	6778 B 9	4695 B 5	4552 C 1	3854 B 2	3775 E 9	3723 B 8	3660 B 7	3588 C 1	3557 E 2	3505 E 3	2784 E 9	2712 A 8	2577 E 1	2526 E 2	1832 C 6	1555 C 1
9896 C 2	9705 E 2	9596 B 6	9559 B 6	9536 E 6	9513 A 6	6790 D 9	4707 B 5	4555 E 5	3855 B 3	3776 E 9	3724 A 9	3663 C 7	3589 E 2	3558 E 1	3507 E 4	2785 E 9	2713 A 8	2578 E 1	2529 E 1	1833 A 5	1556 D 1
9897 B 1	9706 B 3	9597 A 6	9561 B 6	9537 E 7	9514 C 8	6791 D 8	4708 B 5	4630 D 5	3857 A 4	3777 E 9	3733 A 9	3664 B 7	3595 D 2	3559 C 3	3511 E 3	2786 E 9	2714 A 7	2579 D 3	2530 E 2	1834 E 5	1557 C 2
9898 B 3	9783 C 9	9598 A 5	9562 C 2	9538 E 7	9515 E 4	6792 C 4	4709 B 5	4654 D 6	3858 A 3	3781 B 9	3735 B 6	3671 D 9	3596 D 2	3560 C 2	3516 D 2	2790 D 7	2715 A 8	2580 D 3	2537 E 2	2503 E 3	1558 D 1
9899 B 4	9784 E 7	9599 D 1	9563 C 5	9539 C 5	9516 E 7	6857 B 6	4720 C 5	4655 D 7	3863 B 2	3785 E 9	3736 A 6	3672 D 9	3597 E 2	3561 C 1	3517 D 2	2807 A 3	2716 A 8	2588 D 2	2541 D 2	2504 D 3	1562 E 6
	9785 D 7	9600 D 8	9564 E 4	9540 C 7	9517 E 4	7663 E 8	5631 C 8	4656 D 7	3866 A 3	3786 D 9	3738 A 8	3679 D 9	3598 E 2	3562 C 1	3518 C 1	2831 B 3	2717 B 8	2637 C 9	2542 B 2	2505 E 3	1711 A 9
	9786 D 8	9601 A 3	9565 D 8	9541 D 3	9518 C 3	7782 E 9	5632 B 8	4657 D 6	3868 A 2	3788 D 8	3740 D 9	3681 D 9	3601 C 5	3563 D 1	3519 D 2	2832 B 2	2718 B 8	2638 B 9	2550 D 4	2506 D 4	1712 A 9
	9787 E 7	9602 C 8	9566 D 8	9542 C 6	9519 C 4	7785 B 9	5701 E 9	4668 E 6	3870 A 2	3789 E 9	3741 D 9	3682 C 9	3631 C 9	3564 D 1	3520 C 2	2833 B 4	2722 B 7	2641 C 7	2552 D 2	2507 E 3	1713 C 8
	9788 E 7	9603 C 4	9567 E 8	9543 C 6	9520 C 5	7786 B 9	5790 C 5	4671 E 6	3871 A 2	3791 D 8	3742 D 9	3684 D 9	3632 B 8	3565 E 2	3521 C 2	2843 D 3	2727 B 8	2642 B 7	2555 C 4	2508 D 4	1720 A 9
	9789 B 7	9604 B 4	9570 A 7	9544 C 4	9522 A 3	7862 A 5	5791 D 5	4672 E 6	3873 C 6	3792 D 8	3753 E 7	3686 D 9	3635 C 9	3566 E 2	3525 B 2	2844 D 3	2728 A 9	2647 C 7	2556 C 4	2509 E 2	1730 A 8

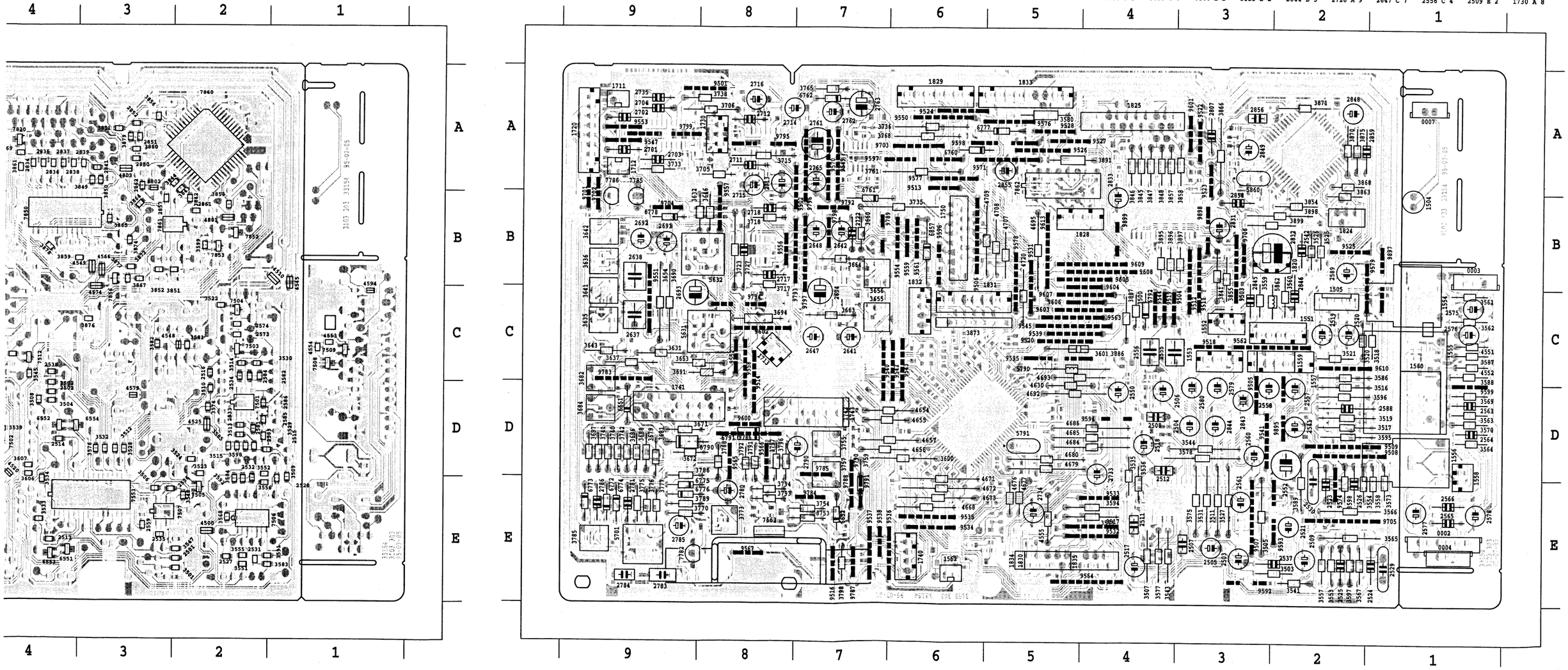

9790 E 7	9605 B 4	9571 A 5	9545 C 5	9523 A 3	9501 A 8	5860 A 3	4673 E 6	3875 A 2	3793 E 8	3754 E 7	3687 D 9	3636 B 9	3567 E 2	3526 B 2	2845 C 3	2733 D 4	2648 B 7	2557 D 2	2511 E 4	1740 E 6	0002 E 1
9791 E 7	9606 C 4	9574 E 2	9547 A 9	9524 A 6	9502 A 7	6651 D 9	4676 E 5	3886 C 5	3794 E 8	3755 D 7	3688 D 9	3637 C 9	3569 D 1	3527 E 3	2846 C 2	2734 E 5	2691 B 9	2558 D 3	2512 D 4	1741 D 9	0003 B 1
9792 B 7	9607 C 4	9576 A 5	9549 A 7	9525 B 2	9503 B 3	6652 E 7	4677 E 5	3887 C 4	3796 D 8	3757 D 7	3690 C 9	3641 C 9	3570 D 1	3531 E 3	2848 A 2	2735 A 9	2692 B 9	2560 D 3	2517 E 4	1743 D 7	0004 E 1
9793 B 7	9608 B 4	9577 A 6	9550 A 6	9526 A 5	9504 C 4	6760 A 6	4679 D 5	3891 A 5	3797 D 8	3759 E 7	3691 C 8	3642 B 9	3573 E 1	3535 D 4	2849 A 3	2761 A 7	2693 C 9	2561 E 3	2518 D 4	1750 B 6	0007 A 1
9794 C 8	9609 B 4	9578 B 5	9551 C 9	9527 A 5	9505 D 3	6772 E 9	4680 D 5	3895 B 4	3798 E 7	3761 A 6	3694 C 8	3643 C 9	3575 E 3	3536 E 4	2855 A 5	2762 A 7	2694 C 7	2563 D 1	2519 C 2	1820 B 2	1504 B 1
9795 A 8	9610 C 2	9579 A 5	9552 C 8	9528 A 5	9506 B 6	6773 E 9	4684 D 4	3896 B 4	3841 B 3	3765 A 7	3705 A 8	3646 B 8	3577 E 4	3541 E 2	2856 A 3	2763 A 7	2701 A 9	2564 D 1	2520 C 2	1824 B 2	1505 C 2
9796 A 7	9613 B 5	9581 E 4	9553 A 9	9531 B 5	9507 E 3	6774 E 9	4685 D 4	3897 B 3	3845 A 4	3766 A 7	3706 A 8	3653 C 8	3578 D 3	3543 E 4	2858 B 3	2765 A 7	2702 A 9	2565 E 1	2521 E 2	1825 A 4	1551 C 2
9797 B 7	9701 B 9	9592 E 3	9554 B 6	9532 E 4	9508 D 2	6775 E 9	4686 D 4	3898 B 2	3846 A 4	3768 A 6	3715 A 8	3654 C 9	3580 B 1	3544 D 3	2859 A 2	2780 E 8	2703 A 9	2566 E 1	2523 E 2	1828 B 5	1552 C 3
9798 B 7	9702 B 9	9593 E 2	9556 B 8	9533 E 4	9509 D 2	6776 E 9	4692 D 5	3899 B 3	3847 A 4	3770 E 9	3717 B 8	3655 C 7	3586 C 2	3553 E 2	3500 C 4	2781 E 9	2704 A 9	2575 C 1	2524 E 1	1829 A 6	1553 C 3
9799 A 9	9703 A 6	9594 D 4	9557 B 8	9534 E 6	9511 B 3	6777 A 5	4693 C 4	4551 C 1	3848 A 4	3773 E 8	3718 B 8	3656 B 7	3587 C 1	3554 E 2	3503 E 2	2783 E 9	2711 A 8	2576 C 1	2525 E 2	1831 C 6	1554 C 1
9895 D 2	9704 B 9	9595 C 5	9558 C 8	9535 E 6	9512 B 3	6778 B 9	4695 B 5	4552 C 1	3854 B 2	3775 E 9	3723 B 8	3660 B 7	3588 C 1	3557 E 2	3505 E 3	2784 E 9	2712 A 8	2577 E 1	2526 E 2	1832 C 6	1555 C 1
9896 C 2	9705 E 2	9596 B 6	9559 B 6	9536 E 6	9513 A 6	6790 D 9	4707 B 5	4555 E 5	3855 B 3	3776 E 9	3724 A 9	3663 C 7	3589 E 2	3558 E 1	3507 E 4	2785 E 9	2713 A 8	2578 E 1	2529 E 1	1833 A 5	1556 D 1
9897 B 1	9706 B 3	9597 A 6	9561 B 6	9537 E 7	9514 C 8	6791 D 8	4708 B 5	4630 D 5	3857 A 4	3777 E 9	3733 A 9	3664 B 7	3595 D 2	3559 C 3	3511 E 3	2786 E 9	2714 A 7	2579 D 3	2530 E 2	1834 E 5	1557 C 2
9898 B 3	9783 C 9	9598 A 5	9562 C 2	9538 E 7	9515 E 4	6792 C 4	4709 B 5	4654 D 6	3858 A 3	3781 B 9	3735 B 6	3671 D 9	3596 D 2	3560 C 2	3516 D 2	2790 D 7	2715 A 8	2580 D 3	2537 E 2	2503 E 3	1558 D 1
9899 B 4	9784 E 7	9599 D 1	9563 C 5	9539 C 5	9516 E 7	6857 B 6	4720 C 5	4655 D 7	3863 B 2	3785 E 9	3736 A 6	3672 D 9	3597 E 2	3561 C 1	3517 D 2	2807 A 3	2716 A 8	2588 D 2	2541 D 2	2504 D 3	1562 E 6
	9785 D 7	9600 D 8	9564 E 4	9540 C 7	9517 E 4	7663 E 8	4631 C 8	4656 D 7	3866 A 3	3786 D 9	3738 A 8	3679 D 9	3598 E 2	3562 C 1	3518 C 1	2831 B 3	2717 B 8	2637 C 9	2542 B 2	2505 E 3	1711 A 9
	9786 D 8	9601 A 3	9565 D 8	9541 D 3	9518 C 3	7782 E 9	5632 B 8	4657 D 6	3868 A 2	3788 D 8	3740 D 9	3681 D 9	3601 C 5	3563 D 1	3519 D 2	2832 B 2	2718 B 8	2638 B 9	2550 D 4	2506 D 4	1712 A 9
	9787 E 7	9602 C 8	9566 D 8	9542 C 6	9519 C 4	7785 B 9	5701 E 9	4668 E 6	3870 A 2	3789 E 9	3741 D 9	3682 C 9	3631 C 9	3564 D 1	3520 C 2	2833 B 4	2722 B 7	2641 C 7	2552 D 2	2507 E 3	1713 C 8
	9788 E 7	9603 C 4	9567 E 8	9543 C 6	9520 C 5	7786 B 9	5790 C 5	4671 E 6	3871 A 2	3791 D 8	3742 D 9	3684 D 9	3632 B 8	3565 E 2	3521 C 2	2843 D 3	2727 B 8	2642 B 7	2555 C 4	2508 D 4	1720 A 9
	9789 B 7	9604 B 4	9570 A 7	9544 C 4	9522 A 3	7862 A 5	5791 D 5	4672 E 6	3873 C 6	3792 D 8	3753 E 7	3686 D 9	3635 C 9	3566 E 2	3525 B 2	2844 D 3	2728 A 9	2647 C 7	2556 C 4	2509 E 2	1730 A 8

9 8 7 6 5 4 3 2 1

A B C D E

2501 E 2	2586 D 2	2729 A 7	3504 D 4	3551 E 2	3639 C 9	3685 D 9	3729 A 7	3774 E 5	3869 A
2502 D 4	2631 C 9	2730 A 7	3506 E 3	3552 D 2	3640 B 9	3689 D 9	3730 A 7	3778 E 9	3872 B
2513 E 4	2632 B 9	2731 A 7	3508 D 4	3555 E 2	3644 B 9	3692 C 9	3731 A 7	3779 E 9	3874 B
2514 D 4	2633 C 8	2732 A 7	3509 E 1	3556 E 2	3645 C 8	3693 C 7	3732 A 7	3780 E 9	3876 C
2515 D 2	2634 B 8	2737 A 8	3510 D 2	3568 E 2	3647 C 8	3695 C 7	3734 A 8	3782 E 9	3877 B
2516 C 2	2635 C 8	2738 A 8	3512 D 3	3572 E 6	3648 B 9	3701 A 9	3737 A 9	3783 E 9	3878 B
2527 E 2	2636 B 8	2752 E 9	3513 D 2	3574 D 2	3649 C 8	3702 A 9	3743 D 7	3784 E 9	3879 A
2528 E 1	2639 C 7	2760 A 8	3514 C 2	3576 D 3	3650 B 9	3703 A 8	3744 D 7	3787 E 9	3880 A
2531 E 2	2640 B 7	2782 E 9	3515 D 2	3581 C 2	3651 C 9	3704 A 8	3745 D 7	3790 D 7	3881 A
2532 E 2	2643 C 7	2787 E 9	3522 C 2	3582 C 3	3652 B 8	3707 A 8	3746 D 7	3811 A 3	3882 A
2533 D 2	2644 B 7	2794 C 5	3523 D 2	3583 E 1	3657 C 7	3708 A 8	3747 D 8	3842 B 2	3883 A
2534 C 2	2645 C 7	2834 A 4	3524 D 2	3584 E 2	3658 B 7	3709 A 8	3748 D 8	3843 B 2	3884 A
2535 E 3	2646 B 7	2835 A 4	3528 D 3	3585 D 2	3659 C 7	3710 A 8	3749 D 7	3844 A 2	3885 A
2536 E 3	2705 A 8	2836 A 4	3529 D 2	3590 D 2	3661 C 7	3711 A 8	3750 D 7	3849 A 3	4500 E
2538 C 4	2706 A 8	2837 A 4	3530 C 2	3591 E 1	3662 B 7	3712 A 8	3751 E 7	3850 A 3	4502 C
2539 E 5	2707 A 8	2838 A 4	3532 D 3	3592 E 2	3665 C 7	3713 A 8	3752 E 7	3851 B 2	4503 A
2540 D 4	2708 A 8	2839 A 3	3533 E 4	3599 B 2	3666 B 7	3714 A 7	3756 D 7	3852 B 3	4506 C
2553 D 5	2709 A 8	2840 A 5	3534 E 4	3600 E 6	3670 D 9	3716 A 8	3758 E 7	3853 B 2	4510 E
2559 E 3	2710 A 8	2841 A 3	3537 D 4	3605 E 5	3673 D 9	3719 B 8	3760 E 6	3856 A 3	4511 E
2573 C 2	2719 C 8	2850 A 3	3538 D 4	3606 E 4	3674 D 9	3720 B 8	3762 A 5	3859 B 3	4516 A
2574 C 2	2720 B 8	2851 A 3	3539 D 4	3607 D 4	3675 D 8	3721 C 8	3763 A 8	3860 A 3	4517 C
2581 D 2	2721 B 8	2852 A 3	3540 C 4	3608 E 6	3676 D 8	3722 B 8	3764 A 7	3861 A 4	4518 E
2582 C 2	2723 B 7	2857 B 3	3545 C 4	3609 E 6	3677 D 8	3725 B 8	3767 A 6	3862 A 3	4520 E
2583 D 2	2724 B 8	2861 B 2	3547 E 2	3633 C 9	3678 D 8	3726 B 7	3769 A 7	3864 B 3	4521 E
2584 C 2	2725 B 7	3501 E 2	3548 E 2	3634 B 9	3680 D 9	3727 A 7	3771 E 9	3865 B 3	4523 E
2585 D 2	2726 B 7	3502 D 4	3549 D 5	3638 B 9	3683 C 9	3728 A 7	3772 E 8	3867 B 3	4524 C

9 8 7 6

A B C D E

3526 B 2	2845 C 3	2733 D 4	2648 B 7	2557 D 2	2511 E 4	1740 E 6	0002 E 1
3527 E 3	2846 C 2	2734 E 5	2691 B 9	2558 D 3	2517 E 4	1741 D 9	0003 B 1
3531 E 3	2848 A 2	2735 A 9	2692 B 9	2560 D 3	2517 E 4	1743 D 7	0004 E 1
3535 D 4	2849 A 3	2761 A 7	2693 C 9	2561 E 3	2518 D 4	1750 B 6	0007 A 1
3536 E 4	2855 A 5	2762 A 7	2694 C 7	2563 D 1	2519 C 2	1820 B 2	1504 B 1
3541 E 2	2856 A 3	2763 A 7	2701 A 9	2564 D 1	2520 C 2	1824 B 2	1505 C 2
3543 E 4	2858 B 3	2765 A 7	2702 A 9	2565 E 1	2521 E 2	1825 A 4	1551 C 2
3544 D 3	2859 A 2	2780 E 8	2703 A 9	2566 E 1	2523 E 2	1828 B 5	1552 C 3
3553 E 2	3500 C 4	2781 E 9	2704 A 9	2575 C 1	2524 E 1	1829 A 6	1553 C 3
3554 E 2	3503 E 2	2783 E 9	2711 A 8	2576 C 1	2525 E 2	1831 C 6	1554 C 1
3557 E 2	3505 E 3	2784 E 9	2712 A 8	2577 E 1	2526 E 2	1832 C 6	1555 C 1
3558 E 1	3507 E 4	2785 E 9	2713 A 8	2578 E 1	2529 E 1	1833 A 5	1556 D 1
3559 C 3	3511 E 3	2786 E 9	2714 A 7	2579 D 3	2530 E 2	1834 E 5	1557 C 2
3560 C 2	3516 D 2	2790 D 7	2715 A 8	2580 D 3	2537 E 2	2503 E 3	1558 D 1
3561 C 1	3517 D 2	2807 A 3	2716 A 8	2588 D 2	2541 D 2	2504 D 3	1562 E 6
3562 C 1	3518 C 1	2831 B 3	2717 B 8	2637 C 9	2542 B 2	2505 E 3	1711 A 9
3563 D 1	3519 D 2	2832 B 2	2718 B 8	2638 B 9	2550 D 4	2506 D 4	1712 A 9
3564 D 1	3520 C 2	2833 B 4	2722 B 7	2641 C 7	2552 D 2	2507 E 3	1713 C 8
3565 E 2	3521 C 2	2843 D 3	2727 B 8	2642 B 7	2555 C 4	2508 D 4	1720 A 9
3566 E 2	3525 B 2	2844 D 3	2728 A 9	2647 C 7	2556 C 4	2509 E 2	1730 A 8

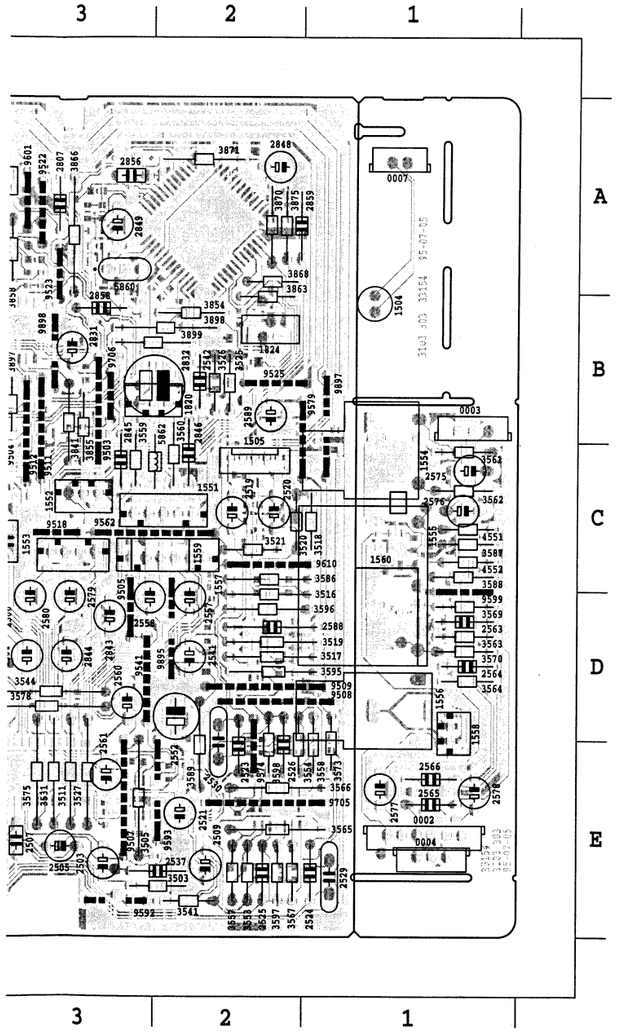

2501 E 2	2586 D 2	2729 A 7	3504 D 4	3551 E 2	3639 C 9	3685 D 9	3729 A 7	3774 E 5	3869 A 4	4525 D 2	4559 E 5	4640 C 6	4674 E 5	4716 C 5	7631 C 9	7783 E 8	T015 A 5	T042 C 2	T074 C 3	T114 D 8	T143 B 6
2502 D 4	2631 C 9	2730 A 7	3506 E 3	3552 D 2	3640 B 9	3689 D 9	3730 A 7	3778 E 9	3872 B 3	4526 E 5	4561 E 5	4641 C 6	4675 E 5	4718 E 5	7632 B 9	7784 E 9	T016 A 5	T043 A 3	T076 C 3	T115 D 8	T144 A 6
2513 E 4	2632 B 9	2731 A 7	3508 D 4	3555 E 2	3644 B 9	3692 C 9	3731 A 7	3779 E 9	3874 B 3	4527 E 4	4565 E 4	4642 C 6	4678 D 5	4719 E 5	7633 C 9	7787 E 9	T018 A 3	T045 C 2	T078 A 5	T116 D 9	T145 B 6
2514 D 4	2633 C 8	2732 A 7	3509 E 1	3556 E 2	3645 C 8	3693 C 7	3732 A 7	3780 E 9	3876 C 3	4529 B 9	4566 B 3	4643 C 6	4681 D 5	4721 C 5	7634 B 9	7788 A 6	T019 A 4	T046 C 1	T079 C 3	T117 C 9	T146 B 6
2515 D 2	2634 B 8	2737 A 8	3510 D 2	3568 E 2	3647 C 8	3695 C 7	3734 A 8	3782 E 9	3877 B 3	4530 E 6	4568 A 7	4644 C 6	4682 D 5	4723 C 8	7640 C 7	7820 A 4	T020 B 2	T047 A 6	T080 D 3	T118 D 9	T147 D 5
2516 C 2	2635 C 8	2738 A 8	3512 D 3	3572 E 6	3648 B 9	3701 A 9	3737 A 9	3783 E 9	3878 B 4	4531 D 8	4572 C 6	4645 C 6	4683 D 5	4724 B 8	7650 D 9	7850 B 4	T021 B 2	T048 B 6	T081 C 2	T119 D 9	T148 E 5
2527 E 2	2636 B 8	2752 E 9	3513 D 2	3574 D 2	3649 C 8	3702 A 9	3743 D 7	3784 E 9	3879 A 3	4533 E 6	4574 C 3	4646 D 6	4687 D 5	4799 C 8	7651 D 9	7851 E 6	T022 B 2	T049 A 3	T082 C 3	T120 D 9	T149 E 7
2528 E 1	2639 C 7	2760 A 8	3514 C 2	3576 D 3	3650 B 9	3703 A 8	3744 D 7	3787 E 9	3880 A 5	4534 C 8	4577 A 5	4647 D 6	4688 D 5	4801 B 2	7652 D 9	7852 B 2	T023 A 2	T050 B 3	T083 E 6	T121 D 9	T161 B 9
2531 E 2	2640 B 7	2782 E 9	3515 D 2	3581 C 2	3651 C 9	3704 A 8	3745 D 7	3790 D 7	3881 A 5	4535 D 7	4578 B 7	4648 C 6	4689 D 6	4802 A 3	7653 D 9	7853 B 2	T024 B 5	T051 A 5	T084 E 5	T122 D 9	T162 E 9
2532 E 2	2643 C 7	2787 E 9	3522 C 2	3582 C 3	3652 B 8	3707 A 8	3746 D 7	3811 A 3	3882 A 5	4536 C 6	4579 D 3	4649 C 6	4690 E 6	4803 A 3	7654 D 9	7856 B 3	T025 B 5	T052 A 6	T085 E 6	T123 D 9	T163 A 9
2533 D 2	2644 B 7	2794 C 5	3523 D 2	3583 E 1	3657 C 7	3708 A 8	3747 D 8	3842 B 2	3883 A 5	4537 A 5	4592 A 6	4650 C 7	4691 D 5	6551 E 4	7655 D 9	7860 A 2	T026 B 4	T053 A 6	T086 E 5	T124 D 9	T164 A 9
2534 C 2	2645 C 7	2834 A 4	3524 D 2	3584 E 2	3658 B 7	3709 A 8	3748 D 8	3843 B 2	3884 A 4	4538 B 6	4593 B 6	4651 C 6	4694 C 5	6552 D 4	7656 E 7	7861 B 3	T027 A 4	T054 A 6	T087 E 6	T125 D 7	T165 A 9
2535 E 3	2646 B 7	2835 A 4	3528 D 3	3585 D 2	3659 C 7	3710 A 8	3749 D 7	3844 A 2	3885 A 5	4540 C 7	4594 C 1	4652 D 6	4696 D 5	6553 E 4	7657 D 7	T001 A 4	T028 B 3	T055 B 2	T088 E 4	T126 D 7	T166 B 9
2536 E 3	2705 A 8	2836 A 4	3529 D 2	3590 D 2	3661 C 7	3711 A 8	3750 D 7	3849 A 3	4500 E 2	4541 B 6	4595 E 5	4653 D 6	4697 C 5	6554 D 4	7658 E 8	T002 A 3	T029 B 2	T056 A 5	T089 E 6	T127 E 7	T167 A 8
2538 C 4	2706 A 8	2837 A 4	3530 C 2	3591 E 1	3662 B 7	3712 A 8	3751 E 7	3850 A 3	4502 C 5	4542 B 6	4596 E 4	4658 D 6	4698 C 5	7501 D 2	7659 E 7	T003 A 3	T030 B 2	T057 A 5	T090 E 4	T128 D 7	T168 A 8
2539 E 5	2707 A 8	2838 A 4	3532 D 3	3592 E 2	3665 C 7	3713 A 8	3752 E 7	3851 B 2	4503 A 9	4543 A 5	4597 E 5	4659 D 6	4699 C 5	7502 D 4	7660 E 8	T004 A 4	T031 C 6	T059 A 5	T091 E 6	T129 E 7	T169 A 8
2540 D 4	2708 A 8	2839 A 3	3533 E 4	3599 B 2	3666 B 7	3714 A 7	3756 D 7	3852 B 3	4506 C 8	4545 B 1	4599 E 4	4660 D 6	4700 C 5	7503 C 2	7661 D 8	T005 A 3	T032 B 3	T061 E 3	T092 E 4	T130 D 7	T170 E 8
2553 D 5	2709 A 8	2840 A 5	3534 E 4	3600 E 6	3670 D 9	3716 A 8	3758 E 7	3853 B 2	4510 B 1	4546 B 6	4631 E 5	4661 E 6	4701 C 5	7504 C 2	7662 D 8	T006 A 4	T033 C 6	T062 E 4	T093 E 1	T131 E 7	T171 A 7
2559 E 3	2710 A 8	2841 A 3	3537 D 4	3605 E 5	3673 D 9	3719 B 8	3760 E 6	3856 A 3	4511 E 8	4547 B 7	4632 C 6	4662 D 5	4702 A 7	7505 E 2	7690 D 6	T007 A 4	T034 C 5	T063 A 5	T094 E 1	T132 D 8	T172 B 7
2573 C 2	2719 C 8	2850 A 3	3538 D 4	3606 E 4	3674 D 9	3720 B 8	3762 A 5	3859 B 3	4516 A 7	4548 C 2	4633 C 6	4663 D 5	4703 C 5	7506 E 2	7701 C 5	T008 A 4	T035 C 5	T064 E 5	T095 C 1	T133 E 7	T173 C 9
2574 C 2	2720 B 8	2851 A 3	3539 D 4	3607 D 4	3675 D 8	3721 C 8	3763 A 8	3860 A 3	4517 C 8	4549 B 3	4634 C 6	4664 D 6	4704 B 6	7507 E 3	7710 A 9	T009 A 3	T036 C 5	T065 E 5	T096 C 1	T134 D 8	T174 B 9
2581 D 2	2721 B 8	2852 A 3	3540 C 4	3608 E 6	3676 D 8	3722 B 8	3764 A 7	3861 A 4	4518 D 8	4550 B 6	4635 C 6	4665 E 6	4705 A 6	7508 C 1	7720 A 8	T010 A 4	T037 C 5	T066 E 3	T097 D 1	T135 E 8	T175 C 8
2582 C 2	2723 B 7	2857 B 3	3545 C 4	3609 E 6	3677 D 8	3725 B 8	3767 A 6	3862 A 3	4520 D 4	4553 C 1	4636 C 6	4666 D 6	4710 B 5	7509 C 1	7730 B 8	T011 A 4	T038 C 6	T067 E 3	T098 D 1	T139 B 6	T176 C 9
2583 D 2	2724 B 8	2861 B 2	3547 E 2	3633 C 9	3678 D 8	3726 B 7	3769 A 7	3864 B 3	4521 E 6	4554 C 1	4637 C 6	4667 E 6	4711 B 6	7512 C 4	7740 A 7	T012 A 4	T039 C 6	T068 E 5	T099 E 1	T140 B 6	T177 B 5
2584 C 2	2725 B 7	3501 E 2	3548 E 2	3634 B 9	3680 D 9	3727 A 7	3771 E 9	3865 B 3	4523 D 8	4557 E 6	4638 C 6	4669 E 6	4712 B 5	7553 E 3	7780 E 9	T013 A 4	T040 C 6	T072 D 2	T100 E 6	T141 B 6	
2585 D 2	2726 B 7	3502 D 4	3549 D 5	3638 B 9	3683 C 9	3728 A 7	3772 E 8	3867 B 3	4524 C 8	4558 E 6	4639 C 6	4670 E 6	4713 B 5	7630 C 9	7781 E 9	T014 B 3	T041 C 6	T073 B 2	T113 D 8	T142 A 5	

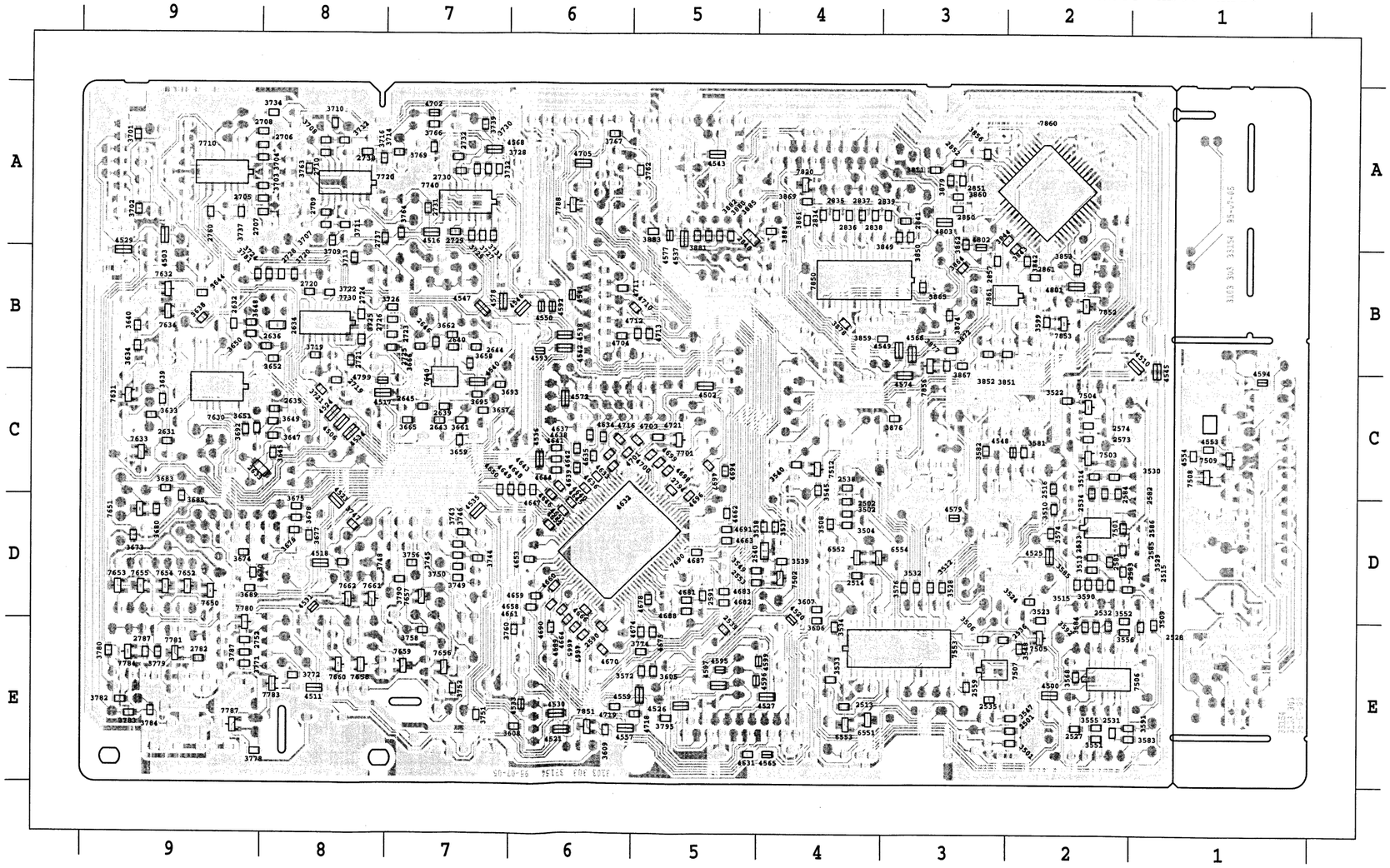

9-13

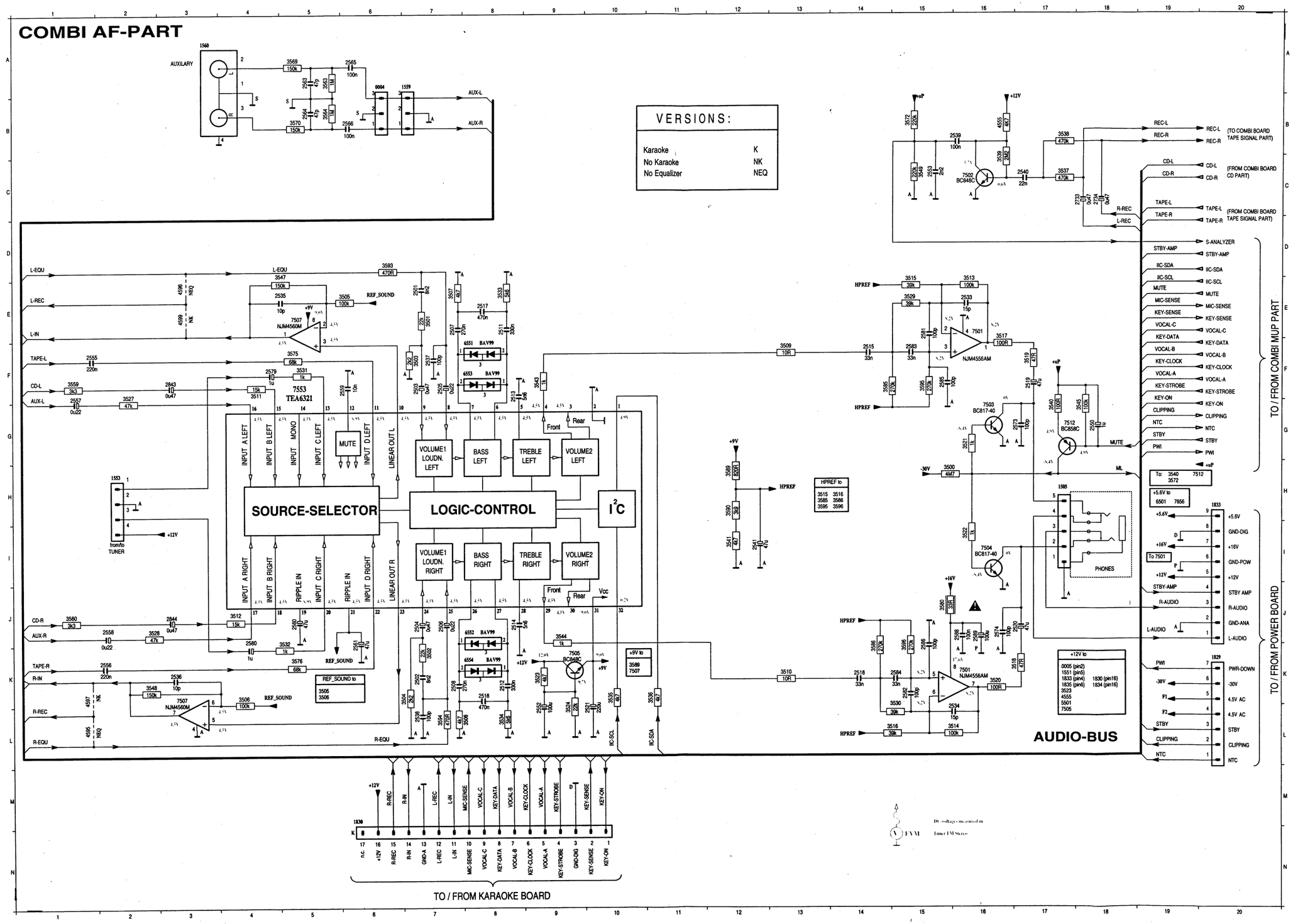
COMBI AF-PART
VERSIONS:
Karaoke K
No Karaoke NK
No Equalizer NEQ
SOURCE-SELECTOR
LOGIC-CONTROL
I²C
TEA6321
NJM4560M
NJM4556AM
AUDIO-BUS
TO / FROM KARAOKE BOARD
TO / FROM COMBI MUP PART
TO / FROM POWER BOARD
(TO COMBI BOARD TAPE SIGNAL PART)
(FROM COMBI BOARD CD PART)
(FROM COMBI BOARD TAPE SIGNAL PART)
PHONES
TUNER

MISCELLANEOUS

	4822 492 71734	Spring Clip TO126
1560	4822 265 20553	Cinch Socket

DIODES

6551	5322 130 34337	BAV99
6552	5322 130 34337	BAV99
6553	5322 130 34337	BAV99
6554	5322 130 34337	BAV99
6651	4822 130 30621	1N4148
6760	4822 130 34382	BZX79-C8V2
6761	4822 130 30621	1N4148
6762	4822 130 30621	1N4148
6772	4822 130 30621	1N4148
6773	4822 130 30621	1N4148
6774	4822 130 30621	1N4148
6775	4822 130 30621	1N4148
6776	4822 130 30621	1N4148
6777	4822 130 34382	BZX79-F8V2
6778	4822 130 30621	1N4148
6790	5322 130 30684	1N4002GP
6791	5322 130 30684	1N4002GP
6792	4822 130 30621	1N4148
6857	4822 130 34167	BZX79-B6V2

TRANSISTORS

7502	5322 130 42136	BC848C
7503	4822 130 42615	BC817-40
7504	4822 130 42615	BC817-40
7505	5322 130 42136	BC848C
7512	4822 130 42513	BC858C
7631	5322 130 42136	BC848C
7632	5322 130 42136	BC848C
7633	5322 130 42136	BC848C
7634	5322 130 42136	BC848C
7650	5322 130 42136	BC848C
7651	4822 130 42513	BC858C
7652	5322 130 42136	BC848C
7653	5322 130 60123	BC807-40
7654	5322 130 42136	BC848C
7655	5322 130 60123	BC807-40
7661	5322 130 60123	BC807-40
7662	5322 130 42136	BC848C
7663	4822 130 40982	BD437
7701	5322 130 42136	BC848C
7780	5322 130 42136	BC848C
7781	5322 130 42136	BC848C
7782	4822 130 41715	BC328-40
7783	5322 130 42136	BC848C
7784	4822 130 60373	BC856B
7785	4822 130 63494	J111
7786	4822 130 63494	J111
7787	4822 130 42513	BC858C
7788	4822 130 42513	BC858C
7820	4822 130 42615	BC817-40
7856	5322 130 42136	BC848C

INTEGRATED CIRCUITS

7501	4822 209 31378	NJM4556M
7507	4822 209 83357	NJM4560M
7553	4822 209 33652	TEA6321T/V1
7630	4822 209 90406	CXA1101M
7640	4822 209 83357	NJM4560M
7690	4822 209 91093	TMP87CM71F -65CV83051
7710	4822 209 32919	HEF4952BT
7720	4822 209 32918	AN7318S
7730	4822 209 32919	HEF4952BT
7740	4822 209 32919	HEF4952BT
7850	4822 209 31064	TDA1301T/N2
7860	4822 209 90618	SAA7345GP/S5
7861	4822 209 32196	TDA1311AT/N2
7862	4822 209 32852	TDA7073A/N2

COILS

5631	4822 156 21725	MPX Filter
5632	4822 156 21725	MPX Filter
5701	4822 156 20946	Osc. Coil 100kHz
5790	4822 156 21721	Coil 2.2µH 10%
5791	5322 242 73697	Ceram Res. 8MHz
5860	4822 242 81865	Ceram Res. 16.93MHz
5862	4822 156 21721	Coil 2.2µH 10%

RESISTORS

3500	4822 111 30893	4M7 5% 0.2W
3501	4822 051 20223	22k 5% 0.1W
3502	4822 051 20223	22k 5% 0.1W
3503	4822 116 52256	2k2 5% 0.5W
3504	4822 051 20222	2k2 5% 0.1W
3505	4822 116 52234	100k 5% 0.5W
3506	4822 051 20104	100k 5% 0.1W
3507	4822 116 52283	4k7 5% 0.5W
3508	4822 051 20472	4k7 5% 0.1W
3509	4822 116 52176	10Ω 5% 0.5W
3510	4822 116 52176	10Ω 5% 0.5W
3511	4822 116 52244	15k 5% 0.5W
3512	4822 051 20153	15k 5% 0.1W
3513	4822 051 20104	100k 5% 0.1W
3514	4822 051 20104	100k 5% 0.1W
3515	4822 051 20393	39k 5% 0.1W
3516	4822 116 83882	39k 5% 0.5W
3517	4822 116 52175	100Ω 5% 0.5W
3518	4822 116 52195	47Ω 5% 0.5W
3519	4822 116 52195	47Ω 5% 0.5W
3520	4822 116 52175	100Ω 5% 0.5W
3521	4822 050 11002	1k 1% 0.4W
3522	4822 051 10102	1k 2% 0.25W
3523	4822 051 20273	27k 5% 0.1W
3524	4822 051 20104	100k 5% 0.1W
3527	4822 116 52284	47k 5% 0.5W
3528	4822 051 20473	47k 5% 0.1W
3529	4822 051 20393	39k 5% 0.1W
3530	4822 051 20393	39k 5% 0.1W
3531	4822 050 11002	1k 1% 0.4W

RESISTORS

3532	4822 051 10102	1k 2% 0.25W
3533	4822 051 20562	5k6 5% 0.1W
3534	4822 051 20562	5K6 5% 0.1W
3535	4822 116 52283	4k7 5% 0.5W
3536	4822 116 52283	4k7 5% 0.5W
3537	4822 051 20474	470k 5% 0.1W
3538	4822 051 20474	470k 5% 0.1W
3539	4822 051 20225	2M2 5% 0.1W
3540	4822 051 20101	100Ω 5% 0.1W
3541	4822 116 52283	4k7 5% 0.5W
3543	4822 050 11002	1k 1% 0.4W
3544	4822 050 11002	1k 1% 0.4W
3545	4822 051 20104	100k 5% 0.1W
3547	4822 051 20154	150k 5% 0.1W
3548	4822 051 20154	150k 5% 0.1W
3549	4822 051 20224	220k 5% 0.1W
3559	4822 116 52269	3k3 5% 0.5W
3560	4822 116 52269	3k3 5% 0.5W
3563	4822 116 52235	1M 5% 0.5W
3564	4822 116 52235	1M 5% 0.5W
3569	4822 116 52245	150k 5% 0.5W
3570	4822 116 52245	150k 5% 0.5W
3572	4822 051 20224	220k 5% 0.1W
3575	4822 116 52297	68k 5% 0.5W
3576	4822 051 20683	68k 5% 0.1W
3580 ⚠	4822 052 10339	33Ω 5% 0.33W
3585	4822 051 20274	270k 5% 0.1W
3586	4822 116 83878	270k 5% 0.5W
3589	4822 116 52231	820Ω 5% 0.5W
3590	4822 051 20392	3k9 5% 0.1W
3593	4822 116 52224	470Ω 5% 0.5W
3594	4822 116 52224	470Ω 5% 0.5W
3595	4822 116 83878	270k 5% 0.5W
3596	4822 116 83878	270k 5% 0.5W
3601	4822 116 52235	1M 5% 0.5W
3605	4822 051 20103	10k 5% 0.1W
3606	4822 051 20473	47k 5% 0.1W
3607	4822 051 20473	47k 5% 0.1W
3631	4822 116 52239	120k 5% 0.5W
3632	4822 116 52239	120k 5% 0.5W
3633	4822 051 20682	6k8 5% 0.1W
3634	4822 051 20682	6k8 5% 0.1W
3635	4822 100 20166	Trimmer 10k 30% 0.1W
3636	4822 100 20166	Trimmer 10k 30% 0.1W
3637	4822 116 52284	47k 5% 0.5W
3638	4822 051 20473	47k 5% 0.1W
3639	4822 051 20562	5k6 5% 0.1W
3640	4822 051 20562	5k6 5% 0.1W
3641	4822 100 20166	Trimmer 10k 30% 0.1W
3642	4822 100 20166	Trimmer 10k 30% 0.1W
3643	4822 116 52284	47k 5% 0.5W
3644	4822 051 20473	47k 5% 0.1W
3645	4822 051 20393	39k 5% 0.1W
3646	4822 116 83882	39k 5% 0.5W
3647	4822 051 20332	3k3 5% 0.1W

RESISTORS

3648	4822 051 20332	3k3 5% 0.1W
3649	4822 051 20562	5k6 5% 0.1W
3650	4822 051 20562	5k6 5% 0.1W
3651	4822 051 10102	1k 2% 0.25W
3652	4822 051 10102	1k 2% 0.25W
3653	4822 050 11002	1k 1% 0.4W
3654	4822 050 11002	1k 1% 0.4W
3655	4822 100 20166	Trimmer 10k 30% 0.1W
3656	4822 100 20166	Trimmer 10k 30% 0.1W
3657	4822 051 10102	1k 2% 0.25W
3658	4822 051 10102	1k 2% 0.25W
3659	4822 051 20333	33k 5% 0.1W
3660	4822 116 52271	33k 5% 0.5W
3661	4822 051 20105	1M 5% 0.1W
3662	4822 051 20105	1M 5% 0.1W
3663	4822 116 52252	180k 5% 0.5W
3664	4822 116 52252	180k 5% 0.5W
3665	4822 117 11149	82k 1% 0.1W
3666	4822 117 11149	82k 1% 0.1W
3671	4822 050 11002	1k 1% 0.4W
3672	4822 116 52234	100k 5% 0.5W
3673	4822 051 10102	1k 2% 0.25W
3674	4822 051 10102	1k 2% 0.25W
3675	4822 051 10102	1k 2% 0.25W
3676	4822 051 10102	1k 2% 0.25W
3677	4822 051 20473	47k 5% 0.1W
3678	4822 051 10102	1k 2% 0.25W
3679	4822 116 52284	47k 5% 0.5W
3680	4822 051 20472	4k7 5% 0.1W
3681	4822 116 52283	4k7 5% 0.5W
3682	4822 100 20166	Trimmer 10k 30% 0.1W
3683	4822 051 20562	5k6 5% 0.1W
3684	4822 100 20166	Trimmer 10k 30% 0.1W
3685	4822 051 20472	4k7 5% 0.1W
3686	4822 116 52284	47k 5% 0.5W
3687	4822 050 11002	1k 1% 0.4W
3688	4822 116 52234	100k 5% 0.5W
3689	4822 051 20104	100k 5% 0.1W
3690	4822 116 83864	10k 5% 0.5W
3691	4822 116 83864	10k 5% 0.5W
3692	4822 117 11746	43k 1% 0.1W
3693	4822 051 20689	68Ω 5% 0.1W
3694 ⚠	4822 052 10109	10Ω 5% 0.33W
3695	4822 051 20689	68Ω 5% 0.1W
3701	4822 051 20221	220Ω 5% 0.1W
3702	4822 051 20221	220Ω 5% 0.1W
3703	4822 051 20221	220Ω 5% 0.1W
3704	4822 051 20221	220Ω 5% 0.1W
3705	4822 116 52215	220Ω 5% 0.5W
3706	4822 116 52215	220Ω 5% 0.5W
3707	4822 051 20101	100Ω 5% 0.1W
3708	4822 051 20101	100Ω 5% 0.1W
3709	4822 051 20109	10Ω 5% 0.1W
3710	4822 051 20109	10Ω 5% 0.1W
3711	4822 051 20184	180k 5% 0.1W

RESISTORS

3712	4822 051 20184	180k 5% 0.1W
3713	4822 051 20109	10Ω 5% 0.1W
3714	4822 051 20109	10Ω 5% 0.1W
3715	4822 116 52249	1k8 5% 0.5W
3716	4822 051 20182	1k8 5% 0.1W
3717	4822 116 52276	3k9 5% 0.5W
3718	4822 116 52276	3k9 5% 0.5W
3719	4822 117 11383	12k 1% 0.1W
3720	4822 117 11383	12k 1% 0.1W
3721	4822 051 20562	5k6 5% 0.1W
3722	4822 051 20562	5k6 5% 0.1W
3723	4822 116 52238	12k 5% 0.5W
3724	4822 117 11383	12k 1% 0.1W
3725	4822 051 20224	220k 5% 0.1W
3726	4822 051 20224	220k 5% 0.1W
3727	4822 051 20562	5k6 5% 0.1W
3728	4822 051 20562	5k6 5% 0.1W
3729	4822 051 20272	2k7 5% 0.1W
3730	4822 051 20272	2k7 5% 0.1W
3731	4822 051 20682	6k8 5% 0.1W
3732	4822 051 20682	6k8 5% 0.1W
3733	4822 116 52215	220Ω 5% 0.5W
3734	4822 051 20221	220Ω 5% 0.1W
3735	4822 116 52264	27k 5% 0.5W
3736	4822 116 52264	27k 5% 0.5W
3737	4822 051 20472	4k7 5% 0.1W
3738	4822 116 52283	4k7 5% 0.5W
3739	4822 051 20121	120Ω 5% 0.1W
3740	4822 116 52284	47k 5% 0.5W
3741	4822 050 11002	1k 1% 0.4W
3742	4822 116 52234	100k 5% 0.5W
3744	4822 051 20153	15k 5% 0.1W
3745	4822 051 10102	1k 2% 0.25W
3746	4822 051 10102	1k 2% 0.25W
3747	4822 051 20104	100k 5% 0.1W
3749	4822 051 10102	1k 2% 0.25W
3759	4822 050 11002	1k 1% 0.4W
3760	4822 051 20104	100k 5% 0.1W
3761	4822 116 83864	10k 5% 0.5W
3762	4822 051 20821	820Ω 5% 0.1W
3763	4822 051 20184	180k 5% 0.1W
3764	4822 051 20471	470Ω 5% 0.1W
3765	4822 116 52284	47k 5% 0.5W
3766	4822 051 20475	4M7 5% 0.1W
3767	4822 051 20223	22k 5% 0.1W
3768	4822 116 52285	470k 5% 0.5W
3769	4822 051 20475	4M7 5% 0.1W
3770	4822 116 52243	1k5 5% 0.5W
3771	4822 051 10102	1k 2% 0.25W
3772	4822 051 20183	18k 5% 0.1W
3773	4822 100 20166	Trimmer 10k 30% 0.1W
3774	4822 051 20223	22k 5% 0.1W
3775	4822 116 52186	22Ω 5% 0.5W
3776	4822 116 52296	6k8 5% 0.5W
3777	4822 116 52211	150Ω 5% 0.5W

RESISTORS

3778	4822 051 20828	8Ω2 5% 0.1W
3779	4822 051 20334	330k 5% 0.1W
3780	4822 051 20105	1M 5% 0.1W
3781	4822 051 20475	4M7 5% 0.1W
3782	4822 051 20472	4k7 5% 0.1W
3783	4822 051 20472	4k7 5% 0.1W
3784	4822 051 20153	15k 5% 0.1W
3785	4822 100 11163	Trimmer 100k 30% 0.1W
3786	4822 116 52256	2k2 5% 0.5W
3787	4822 051 20105	1M 5% 0.1W
3788	4822 116 52235	1M 5% 0.5W
3789	4822 116 52257	22k 5% 0.5W
3795	4822 051 20103	10k 5% 0.1W
3796	4822 050 11002	1k 1% 0.4W
3797	4822 116 52234	100k 5% 0.5W
3798	4822 116 52175	100Ω 5% 0.5W
3811	4822 051 10102	1k 2% 0.25W
3841	4822 116 52176	10Ω 5% 0.5W
3842	4822 051 20221	220Ω 5% 0.1W
3843	4822 051 20221	220Ω 5% 0.1W
3844	4822 051 20221	220Ω 5% 0.1W
3845	4822 116 83864	10k 5% 0.5W
3846	4822 116 83864	10k 5% 0.5W
3847	4822 116 83864	10k 5% 0.5W
3848	4822 116 83864	10k 5% 0.5W
3851	4822 051 20103	10k 5% 0.1W
3852	4822 051 20103	10k 5% 0.1W
3854	4822 116 52215	220Ω 5% 0.5W
3855	4822 116 52256	2k2 5% 0.5W
3856	4822 051 20223	22k 5% 0.1W
3857	4822 116 83864	10k 5% 0.5W
3858	4822 116 83864	10k 5% 0.5W
3859	4822 051 20229	22Ω 5% 0.1W
3860	4822 051 20101	100Ω 5% 0.1W
3861	4822 051 20103	10k 5% 0.1W
3862	4822 051 20105	1M 5% 0.1W
3863	4822 116 52176	10Ω 5% 0.5W
3864	4822 051 20229	22Ω 5% 0.1W
3865	4822 051 20103	10k 5% 0.1W
3866	4822 116 52219	330Ω 5% 0.5W
3867	4822 051 20221	220Ω 5% 0.1W
3868	4822 116 52176	10Ω 5% 0.5W
3869	4822 051 20103	10k 5% 0.1W
3870	4822 116 52243	1k5 5% 0.5W
3871	4822 116 52186	22Ω 5% 0.5W
3872	4822 051 20222	2k20 5% 0.1W
3873	4822 116 90835	Resistor network 10k x 7 0.125W
3874	4822 051 20103	10k 5% 0.1W
3875	4822 116 52243	1k5 5% 0.5W
3876	4822 117 11139	1k5 1% 0.1W
3877	4822 051 20222	2k2 5% 0.1W
3878	4822 051 20105	1M 5% 0.1W
3879	4822 051 20154	150k 5% 0.1W
3880	4822 051 20393	39k 5% 0.1W
3881	4822 051 20333	33k 5% 0.1W

9-15
ELECTRICAL PARTS-COMBI BOARD

RESISTORS

3882	4822 051 10102	1k 2% 0.25W
3883	4822 051 20122	1k2 5% 0.1W
3884	4822 051 10102	1k 2% 0.25W
3885	4822 051 10102	1k 2% 0.25W
3891 ⚠	4822 052 10338	3Ω3 5% 0.33W
3895	4822 116 52264	27k 5% 0.5W
3896	4822 116 52251	18k 5% 0.5W
3897	4822 116 52251	18k 5% 0.5W
3898	4822 116 83882	39k 5% 0.5W
3899	4822 116 83882	39k 5% 0.5W
4500	4822 051 10008	Chip Jumper 1206
4502	4822 051 10008	Chip Jumper 1206
4503	4822 051 10008	Chip Jumper 1206
4506	4822 051 10008	Chip Jumper 1206
4510	4822 051 10008	Chip Jumper 1206
4511	4822 051 10008	Chip Jumper 1206
4516	4822 051 10008	Chip Jumper 1206
4517	4822 051 10008	Chip Jumper 1206
4518	4822 051 10008	Chip Jumper 1206
4520	4822 051 20008	Chip Jumper 0805
4521	4822 051 10008	Chip Jumper 1206
4523	4822 051 10008	Chip Jumper 1206
4524	4822 051 10008	Chip Jumper 1206
4525	4822 051 10008	Chip Jumper 1206
4526	4822 051 10008	Chip Jumper 1206
4527	4822 051 10008	Chip Jumper 1206
4529	4822 051 10008	Chip Jumper 1206
4530	4822 051 10008	Chip Jumper 1206
4531	4822 051 20008	Chip Jumper 0805
4533	4822 051 20008	Chip Jumper 0805
4534	4822 051 10008	Chip Jumper 1206
4535	4822 051 10008	Chip Jumper 1206
4536	4822 051 10008	Chip Jumper 1206
4537	4822 051 10008	Chip Jumper 1206
4538	4822 051 10008	Chip Jumper 1206
4540	4822 051 10008	Chip Jumper 1206
4541	4822 051 20008	Chip Jumper 0805
4542	4822 051 10008	Chip Jumper 1206
4543	4822 051 10008	Chip Jumper 1206
4545	4822 051 10008	Chip Jumper 1206
4546	4822 051 10008	Chip Jumper 1206
4547	4822 051 10008	Chip Jumper 1206
4548	4822 051 20008	Chip Jumper 0805
4549	4822 051 10008	Chip Jumper 1206
4550	4822 051 20008	Chip Jumper 0805
4555	4822 116 52283	4k7 5% 0.5W
4557	4822 051 10008	Chip Jumper 1206
4559	4822 051 10008	Chip Jumper 1206
4565	4822 051 20008	Chip Jumper 0805
4566	4822 051 10008	Chip Jumper 1206
4568	4822 051 10008	Chip Jumper 1206
4572	4822 051 10008	Chip Jumper 1206
4574	4822 051 10008	Chip Jumper 1206
4577	4822 051 20008	Chip Jumper 0805
4578	4822 051 10008	Chip Jumper 1206

RESISTORS

4579	4822 051 20008	Chip Jumper 0805
4595	4822 051 20008	Chip Jumper 0805
4596	4822 051 20008	Chip Jumper 0805
4597	4822 051 10008	Chip Jumper 1206
4599	4822 051 20008	Chip Jumper 0805
4630	4822 050 11002	1k 1% 0.4W
4631	4822 051 20103	10k 5% 0.1W
4632	4822 051 10102	1k 2% 0.25W
4633	4822 051 10102	1k 2% 0.25W
4634	4822 051 10102	1k 2% 0.25W
4635	4822 051 10102	1k 2% 0.25W
4636	4822 051 10102	1k 2% 0.25W
4637	4822 051 10102	1k 2% 0.25W
4638	4822 051 10102	1k 2% 0.25W
4639	4822 051 10102	1k 2% 0.25W
4640	4822 051 10102	1k 2% 0.25W
4641	4822 051 10102	1k 2% 0.25W
4642	4822 051 10102	1k 2% 0.25W
4643	4822 051 10102	1k 2% 0.25W
4644	4822 051 10102	1k 2% 0.25W
4645	4822 051 10102	1k 2% 0.25W
4646	4822 051 10102	1k 2% 0.25W
4647	4822 051 10102	1k 2% 0.25W
4648	4822 051 10102	1k 2% 0.25W
4649	4822 051 10102	1k 2% 0.25W
4650	4822 051 10102	1k 2% 0.25W
4651	4822 051 10102	1k 2% 0.25W
4652	4822 051 10102	1k 2% 0.25W
4653	4822 051 20473	47k 5% 0.1W
4654	4822 050 11002	1k 1% 0.4W
4655	4822 050 11002	1k 1% 0.4W
4656	4822 050 11002	1k 1% 0.4W
4657	4822 050 11002	1k 1% 0.4W
4659	4822 051 20221	220Ω 5% 0.1W
4660	4822 051 10102	1k 2% 0.25W
4661	4822 051 10102	1k 2% 0.25W
4662	4822 051 20472	4k7 5% 0.1W
4663	4822 051 20472	4k7 5% 0.1W
4664	4822 051 20222	2k2 5% 0.1W
4665	4822 051 20103	10k 5% 0.1W
4666	4822 051 20222	2k2 5% 0.1W
4667	4822 051 20472	4k7 5% 0.1W
4668	4822 050 11002	1k 1% 0.4W
4670	4822 051 20103	10k 5% 0.1W
4671	4822 050 11002	1k 1% 0.4W
4672	4822 050 11002	1k 1% 0.4W
4673	4822 050 11002	1k 1% 0.4W
4674	4822 051 10102	1k 2% 0.25W
4675	4822 051 20273	27k 5% 0.1W
4676	4822 050 11002	1k 1% 0.4W
4677	4822 050 11002	1k 1% 0.4W
4678	4822 051 10102	1k 2% 0.25W
4679	4822 050 11002	1k 1% 0.4W
4680	4822 050 11002	1k 1% 0.4W
4681	4822 051 20472	4k7 5% 0.1W

RESISTORS

4682	4822 051 10102	1k 2% 0.25W
4683	4822 051 20103	10k 5% 0.1W
4684	4822 116 52256	2k2 5% 0.5W
4685	4822 116 52256	2k2 5% 0.5W
4686	4822 050 11002	1k 1% 0.4W
4687	4822 051 20472	4k7 5% 0.1W
4688	4822 051 20223	22k 5% 0.1W
4689	4822 051 10102	1k 2% 0.25W
4690	4822 051 20471	470Ω 5% 0.1W
4691	4822 051 20472	4k7 5% 0.1W
4692	4822 050 11002	1k 1% 0.4W
4693	4822 116 52234	100k 5% 0.5W
4694	4822 051 10102	1k 2% 0.25W
4695	4822 050 11002	1k 1% 0.4W
4696	4822 051 20221	220Ω 5% 0.1W
4697	4822 051 10102	1k 2% 0.25W
4698	4822 051 20221	220Ω 5% 0.1W
4699	4822 051 20221	220Ω 5% 0.1W
4700	4822 051 20221	220Ω 5% 0.1W
4701	4822 051 10102	1k 2% 0.25W
4702	4822 051 20008	Chip Jumper 0805
4703	4822 051 10102	1k 2% 0.25W
4704	4822 051 10102	1k 2% 0.25W
4705	4822 051 10008	Chip Jumper 1206
4707	4822 050 11002	1k 1% 0.4W
4708	4822 050 11002	1k 1% 0.4W
4709	4822 050 11002	1k 1% 0.4W
4710	4822 051 10102	1k 2% 0.25W
4711	4822 051 10102	1k 2% 0.25W
4712	4822 051 10102	1k 2% 0.25W
4713	4822 051 10102	1k 2% 0.25W
4716	4822 051 10102	1k 2% 0.25W
4718	4822 051 20103	10k 5% 0.1W
4719	4822 051 20103	10k 5% 0.1W
4720	4822 116 52278	390k 5% 0.5W
4721	4822 051 20104	100k 5% 0.1W
4801	4822 051 10008	Chip Jumper 1206
4802	4822 051 20008	Chip Jumper 0805
4803	4822 051 10008	Chip Jumper 1206

CAPACITORS

2501	4822 122 33336	8.2nF 10% 50V
2502	4822 122 33336	8.2nF 10% 50V
2503	4822 124 41407	0.47µF 20% 63V
2504	4822 124 41407	0.47µF 20% 63V
2505	4822 124 40746	0.22µF 20% 63V
2506	4822 124 40746	0.22µF 20% 63V
2507	4822 121 41738	270nF 5% 63V
2508	4822 121 41738	270nF 5% 63V
2509	4822 124 40433	47µF 20% 25V
2511	5322 121 42661	330nF 5% 63V
2512	5322 121 42661	330nF 5% 63V
2513	4822 122 32646	5.6nF 10% 50V
2514	4822 122 32646	5.6nF 10% 50V
2515	4822 122 33342	33nF 10% 63V
2516	4822 122 33342	33nF 10% 63V

CAPACITORS

2517	4822 121 51252	470nF 5% 63V
2518	4822 121 51252	470nF 5% 63V
2519	4822 124 40433	47µF 20% 25V
2520	4822 124 40433	47µF 20% 25V
2521	4822 124 40196	220µF 20% 16V
2533	5322 122 32481	15pF 5% 50V
2534	5322 122 32481	15pF 5% 50V
2535	5322 122 32448	10pF 5% 50V
2536	5322 122 32448	10pF 5% 50V
2537	4822 122 33195	100pF 10% 50V
2538	5322 122 32531	100pF 5% 50V
2539	4822 126 10002	100nF 20% 25V
2540	4822 122 31797	22nF 10% 63V
2541	4822 124 40433	47µF 20% 25V
2542	4822 122 33519	470pF 10% 50V
2550	4822 124 40242	1µF 20% 63V
2552	4822 124 41596	22µF 20% 50V
2553	4822 122 33175	2.2nF 20% 50V
2555	4822 121 42408	220nF 5% 63V
2556	4822 121 42408	220nF 5% 63V
2557	4822 124 40746	0.22µF 20% 63V
2558	4822 124 40746	0.22µF 20% 63V
2559	4822 122 33177	10nF 20% 50V
2560	4822 124 40433	47µF 20% 25V
2561	4822 124 40433	47µF 20% 25V
2563	4822 122 33848	47pF 5% 50V
2564	4822 122 33848	47pF 5% 50V
2565	4822 126 12882	100nF +80/-20% 50V
2566	4822 126 12882	100nF +80/-20% 50V
2573	5322 122 32531	100pF 5% 50V
2574	5322 122 32531	100pF 5% 50V
2579	4822 124 40242	1µF 20% 63V
2580	4822 124 40242	1µF 20% 63V
2581	5322 122 32531	100pF 5% 50V
2582	5322 122 32531	100pF 5% 50V
2583	4822 122 33342	33nF 10% 63V
2584	4822 122 33342	33nF 10% 63V
2585	5322 122 32531	100pF 5% 50V
2586	5322 122 32531	100pF 5% 50V
2588	4822 126 12882	100nF +80/-20% 50V
2589	4822 124 41525	100µF 20% 25V
2590	4822 122 33177	10nF 20% 50V
2591	4822 122 33177	10nF 20% 50V
2631	4822 122 32541	27nF 10% 63V
2632	4822 122 32541	27nF 10% 63V
2633	4822 126 13057	220nF 10% 25V
2634	4822 126 13057	220nF 10% 25V
2635	4822 122 33891	3.3nF 10% 63V
2636	4822 122 33891	3.3nF 10% 63V
2637	5322 121 42498	680nF 5% 63V
2638	5322 121 42498	680nF 5% 63V
2639	5322 122 32531	100pF 5% 50V
2640	5322 122 32531	100pF 5% 50V
2641	4822 124 40246	4.7µF 20% 63V
2642	4822 124 40246	4.7µF 20% 63V

CAPACITORS

2643	4822 122 33177	10nF 20% 50V
2644	4822 122 33177	10nF 20% 50V
2645	5322 122 32448	10pF 5% 50V
2646	5322 122 32448	10pF 5% 50V
2647	4822 124 40246	4.7µF 20% 63V
2648	4822 124 40246	4.7µF 20% 63V
2691	4822 124 40246	4.7µF 20% 63V
2692	4822 124 41584	100µF 20% 10V
2693	4822 124 41525	100µF 20% 25V
2694	4822 124 41525	100µF 20% 25V
2701	4822 122 33195	100pF 10% 50V
2702	4822 122 33195	100pF 10% 50V
2703	4822 122 33195	100pF 10% 50V
2704	4822 122 33195	100pF 10% 50V
2705	5322 122 32531	100pF 5% 50V
2706	5322 122 32531	100pF 5% 50V
2707	5322 122 34099	470pF 10% 63V
2708	5322 122 34099	470pF 10% 63V
2709	5322 122 32531	100pF 5% 50V
2710	5322 122 32531	100pF 5% 50V
2711	4822 122 33195	100pF 10% 50V
2712	4822 122 33195	100pF 10% 50V
2713	4822 124 41579	10µF 20% 50V
2714	4822 124 41579	10µF 20% 50V
2715	4822 124 40196	220µF 20% 16V
2716	4822 124 40196	220µF 20% 16V
2717	4822 126 12339	2.2nF 10%
2718	4822 126 12339	2.2nF 10%
2719	4822 122 33893	18nF 10% 63V
2720	4822 122 33893	18nF 10% 63V
2721	4822 122 33342	33nF 10% 63V
2722	4822 126 13174	33nF +80/-20% 16V
2723	4822 126 10326	180pF 5% 63V
2724	4822 126 10326	180pF 5% 63V
2725	4822 122 33575	220pF 5% 50V
2726	4822 122 33575	220pF 5% 50V
2727	4822 122 10459	560pF 10% 50V
2728	4822 122 33173	560pF 10% 50V
2729	4822 122 32541	27nF 10% 63V
2730	4822 122 32541	27nF 10% 63V
2733	4822 124 41407	0.47µF 20% 63V
2734	4822 124 41407	0.47µF 20% 63V
2735	4822 126 12882	100nF +80/-20% 50V
2737	4822 126 10002	100nF 20% 25V
2738	4822 126 10002	100nF 20% 25V
2752	5322 122 32654	22nF 10% 63V
2760	4822 126 10002	100nF 20% 25V
2761	4822 124 22263	220µF 20% 25V
2762	4822 124 40246	4.7µF 20% 63V
2763	4822 124 40433	47µF 20% 25V
2765	4822 124 40433	47µF 20% 25V
2780	4822 124 40246	4.7µF 20% 63V
2781	4822 121 51387	10nF 20% 16V
2782	5322 122 31866	6.8nF 10% 63V
2783	5322 121 42386	100nF 5% 63V

CAPACITORS

2784	4822 121 41934	22nF 10% 100V
2785	4822 124 41579	10µF 20% 50V
2786	4822 122 33195	100pF 10% 50V
2787	4822 122 33342	33nF 10% 63V
2794	4822 126 10002	100nF 20% 25V
2807	4822 126 12339	2.2nF 10%
2831	4822 124 40433	47µF 20% 25V
2832	4822 124 40184	1000µF 20% 10V
2833	4822 124 40433	47µF 20% 25V
2834	5322 126 10794	220pF 5% 63V
2835	5322 126 10794	220pF 5% 63V
2836	5322 126 10794	220pF 5% 63V
2837	5322 126 10794	220pF 5% 63V
2838	5322 126 10794	220pF 5% 63V
2839	5322 126 10794	220pF 5% 63V
2840	4822 122 33496	100nF 10% 63V
2843	4822 124 41407	0.47µF 20% 63V
2844	4822 124 41407	0.47µF 20% 63V
2845	4822 126 12339	2.2nF 10%
2846	4822 126 12339	2.2nF 10%
2848	4822 124 40433	47µF 20% 25V
2849	4822 124 40433	47µF 20% 25V
2850	5322 122 32658	22pF 5% 50V
2851	5322 122 32654	22nF 10% 63V
2852	5322 122 32452	47pF 5% 63V
2855	4822 124 40433	47µF 20% 25V
2856	5322 121 42386	100nF 5% 63V
2858	4822 122 33195	100pF 10% 50V
2859	4822 121 51387	10nF 20% 16V

Note: Only the parts mentioned in this list are normal service parts.

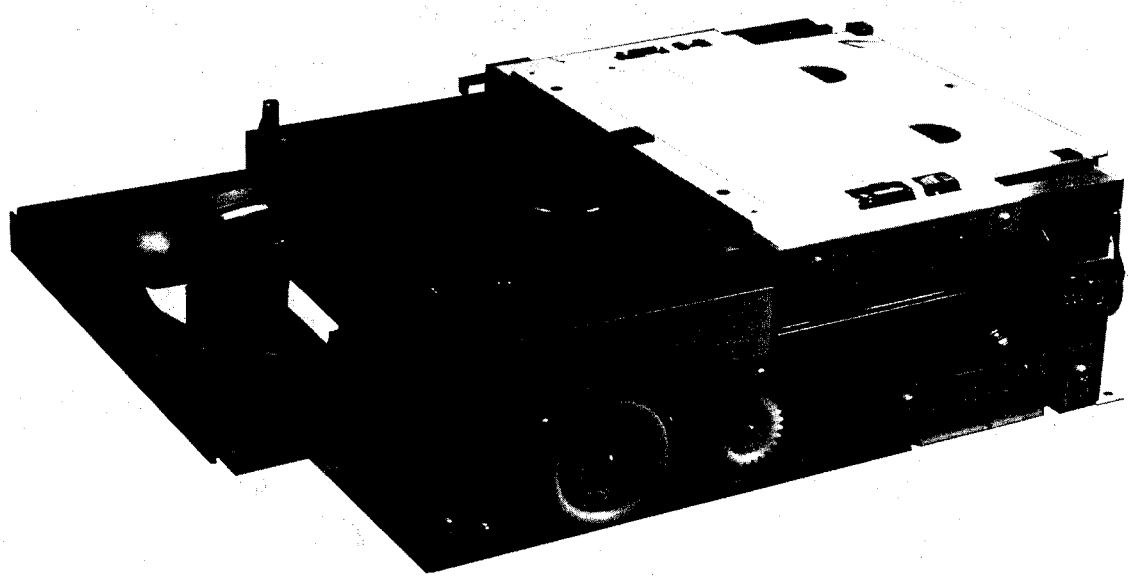

CD CHANGER UNIT CDC7

TABLE OF CONTENTS

Overview of the CDC-7 mechanism

The CDC-7 mechanism is a tray-loader system with an elevator called "stocker" in its back that can hold up to 7 discs. The CD-pickup unit (CDM12.1 mechanism) is in the middle of the CDC-7 mechanism.

The tray motor is responsible for movement of tray and stocker. Which part it moves depends on a clutch, controlled by a cam wheel in the middle of the CDC-7 mechanism. The Cam wheel lifts or lowers also the Disc lock pin and the CD pickup unit. The cam wheel is driven by the cam motor and has 3 positions, called ´PLAY´, ´TRAY MOVE´ and ´STOCKER MOVE´

Cam position	Tray motor	CD pickup unit	Disc lock pin	SW1	SW2	SW3
Stocker move	Drives the stocker up or down	down	up	close	open	open
Tray move	Drives the tray in or out	down	down	close	close	close
Play	-	up	down	open	close	close

Stocker move position

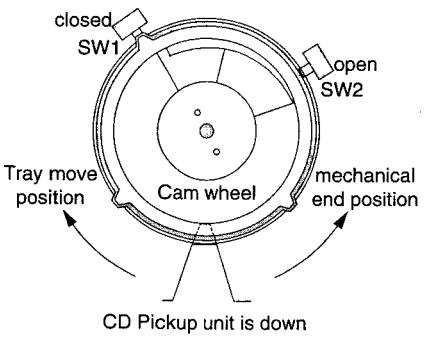

Tray move position

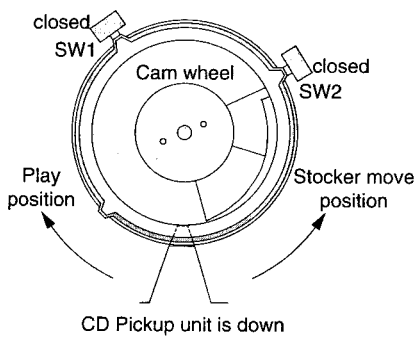

Play position

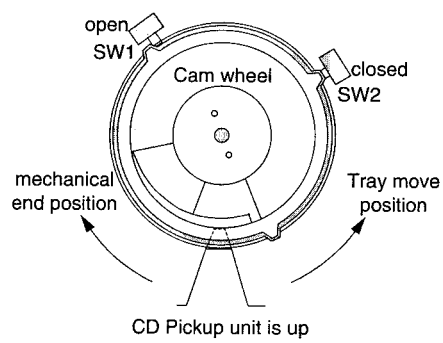

The complete operation (including feedback sensing) of the CDC-7 mechanism is controlled by 2 motors, 2 photo sensors and several switches. A quick reference of the switches and sensors' functions are given in the table below:

Name	Activated by	Detects
Eject switch	Outer tray	- Tray open - User´s intention (push tray to close)
Store switch	Shuttle	Carriage is fully in the stocker
Play position over switch	Shuttle	Approximate position for disc play. It actually reverses the tray motion for the disc detect photo reflector to locate the play position.
Disc detect photo reflector	Carriage	Detects a disc
SW1, SW2	Cam wheel	- Cam in ´STOCKER MOVE´ or in ´TRAY MOVE´ position. - CD pickup unit in up or down position.
SW3 (Disc lock)	Disc lock pin	Actual position of the disc lock pin
Home switch	Moving bracket (pos. 23)	Upmost stocker posiion (Disc 1)
Disc count photo interruptor	Moving bracket (pos. 23)	Counts the current carriage (or disc)

Operations

The tray consists of an outer tray which is the same for all discs and an inner carriage for each individual disc. The carriage which actually holds the disc is moved by a tooth-bar called ´SHUTTLE´. Each carriage has a slot in which the shuttle engages when the stocker chooses that particular disc position. The shuttle pulls the carriage out of the stocker. When it reaches the outer tray, both the outer tray and carriage opens. All the movements are done by the combination of the tray motor, belt and gears. A mechanical locking between the carriage and outer tray prevents accidental separation by the customer. When the tray is closed the shuttle pushes the carriage back in the stocker (if requested). At the right back of the stocker are springs that will hold each carriage in position within the stocker.

When the carriage is in the stocker, this position is signalled by a switch at the right back called STORE SWITCH. It is pressed by the shuttle when the carriage is completely in the stocker.

The open position of the tray is given by an EJECT SWITCH. This eject switch at left front is actuated when the tray has fully opened. This switch also indicates the customer's intention to close the tray when he pushes the tray inside.

To find the PLAY POSITION (center position) of the carriage (disc) there is a photo reflector called DISC DETECT on the right middle of the CDC-7 mechanism. This photo reflector is responsible for disc detection. It shines through a very small rectangular hole (1 x 5 mm) in the carriage. Because the photo reflector is used to find the play position it is clear that the *play position cannot be reached without a disc* on the carriage. The hole in the carriage and the position of the photo reflector are pre-aligned in the factory such that accurate play position is achieved at the first photo reflector signal.

> Note:The photo reflector must be aligned to the same horizontal centre line as the CDM12.1 turntable spindle. This will ensure the disc to sit accurately during play and prevents any rubbing of the disc against the carriage.

Alignment of photo sensor

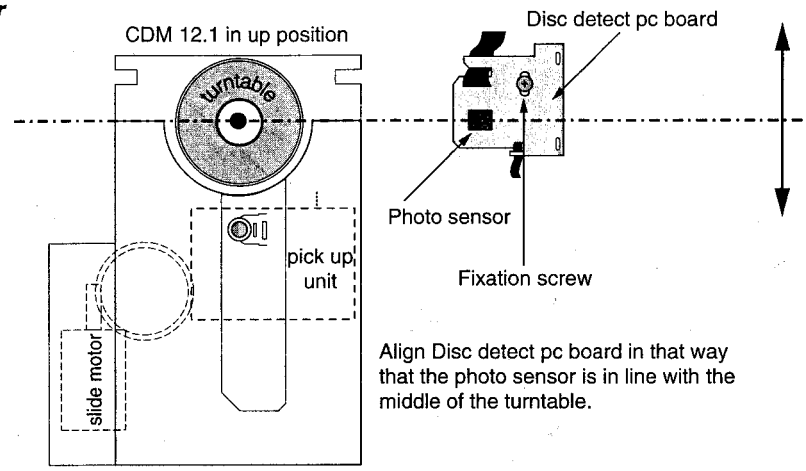

There is an extra switch, called PLAY-POSITION-OVER SWITCH that is triggered by the small latch lever on the outer tray. The carriage moves till the play-position-over switch is triggered and then reverses slowly till the photo-reflector senses that the play position is reached.

The cam motor turns the cam wheel in the center of the CDC-7 mechanism. This cam controls a clutch which selects between tray or stocker movement. It also lifts or lowers the disc-lock pin and the CD-pickup unit. The 3 positions of the cam is given by two switches named SW1 and SW2. At the cam's mechanically blocked end positions both switches are open.

The position of the stocker is monitored by a disc count photo interrupter and a home switch. The disc count interrupter gives a low signal when a disc position is reach and a high signal when the stocker is between two valid positions (or carriages). The home switch gives the location of the uppermost stocker position (disc number 1). The home switch is located on the right of the cam switch SW2. The disc count photo interrupter is immediately next to the right side of the home switch (it is very small!).

> Note:If the stocker is between two valid positions, tray movement will be mechanically blocked.

The CDC-7 mechanism has 2 safety features - its ability to detect 2 discs loaded into one carriage and to detect an 8cm CD-Single that is placed off-center on a carriage, obstructing the center hole of the carriage.

> Note:Only disc 1 has a special carriage that can hold either a 12cm or a 8cm disc, all other carriages are designed to carry 12cm discs only!

If two discs are loaded into a single carriage the upper disc cannot go into the stocker because it will be stopped by a pip on left side of the outer tray. The disc-detect photo reflector will also sense the extra disc outside the stocker. When this happens, the same tray with the rejected discs is opened and a message is given on the display.

For further information see Circuit Description CDC7 Changer (4822 725 24764)!

Mechanical overview of CDC7 Module

Identification of parts

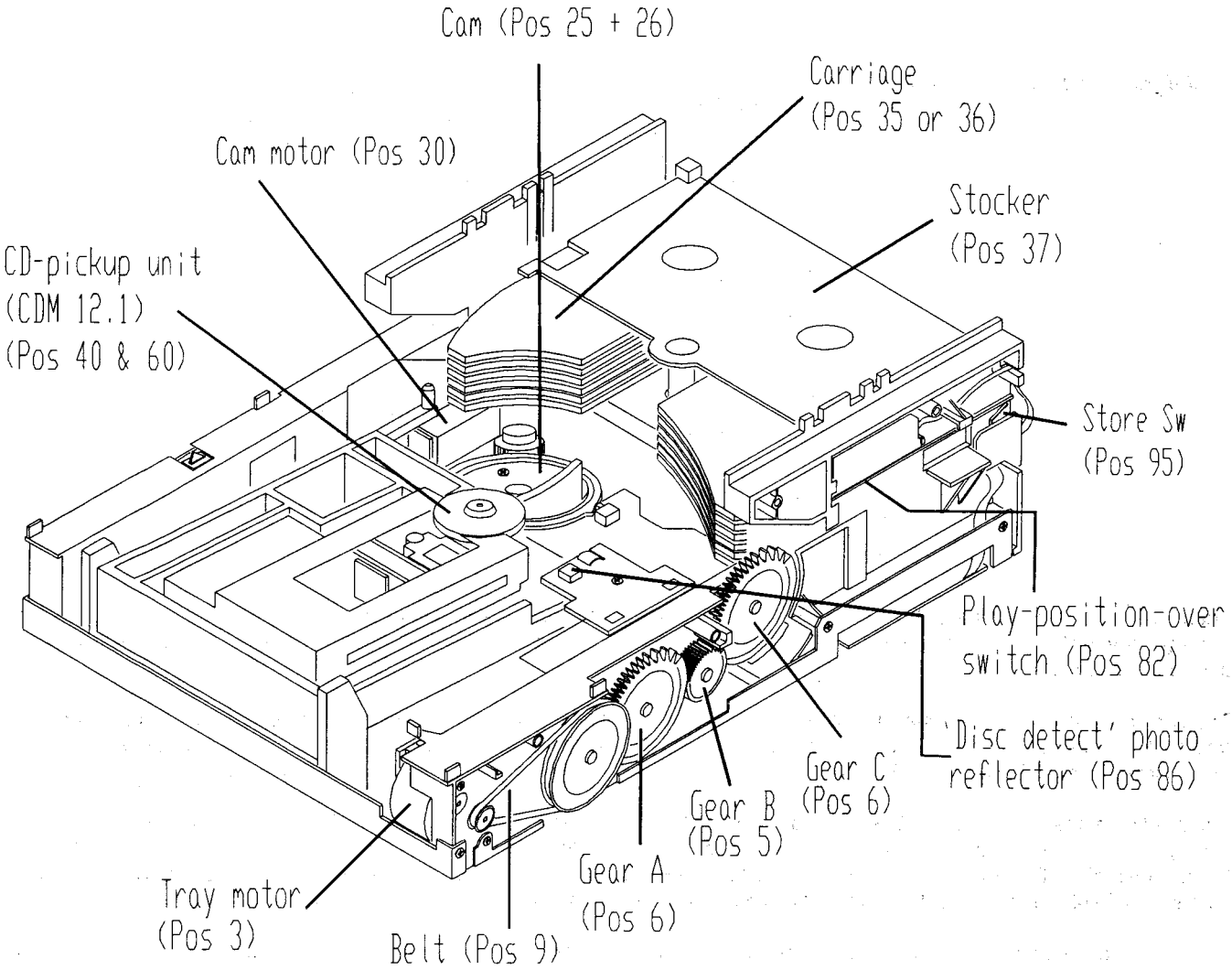

Mechanical overview of CDC7 Module

Identification of parts

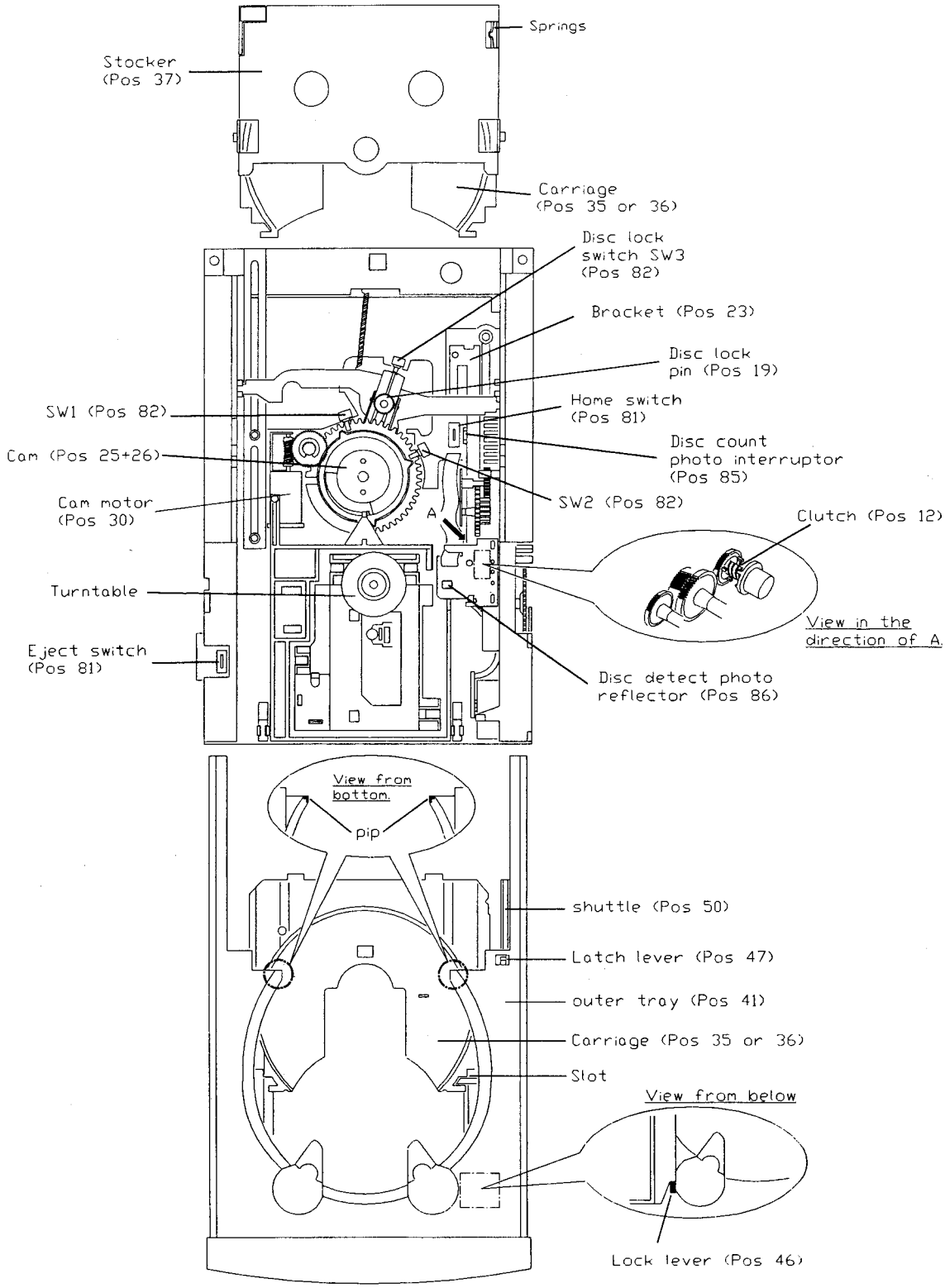

Dismantling hints

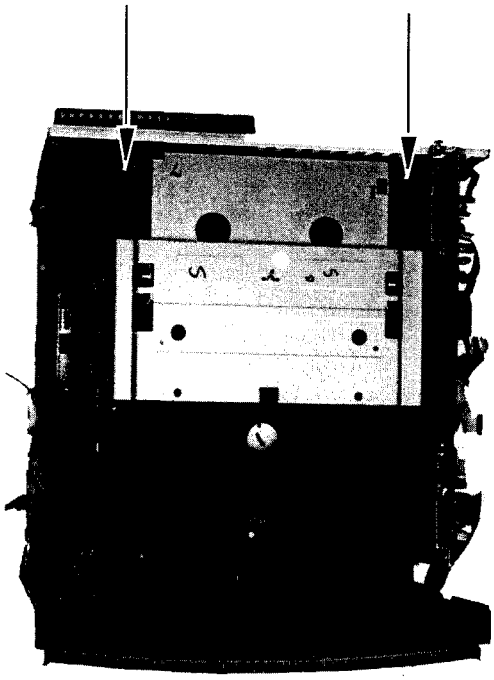

1) With the Cover door, CDC demounted, remove 2 screws.

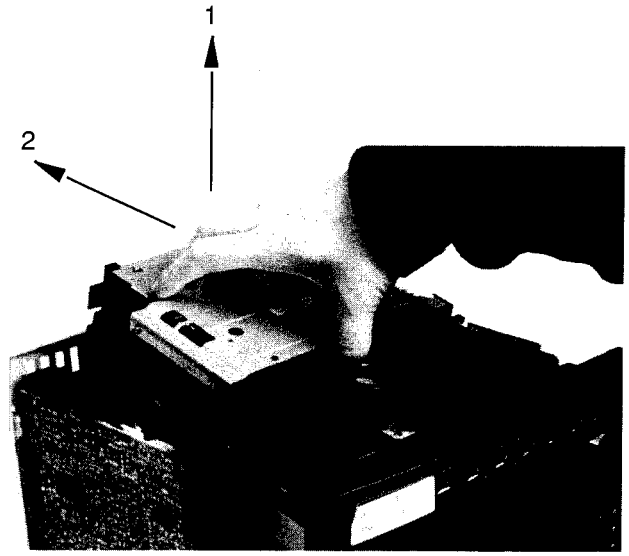

2) Lift the module up as shown.

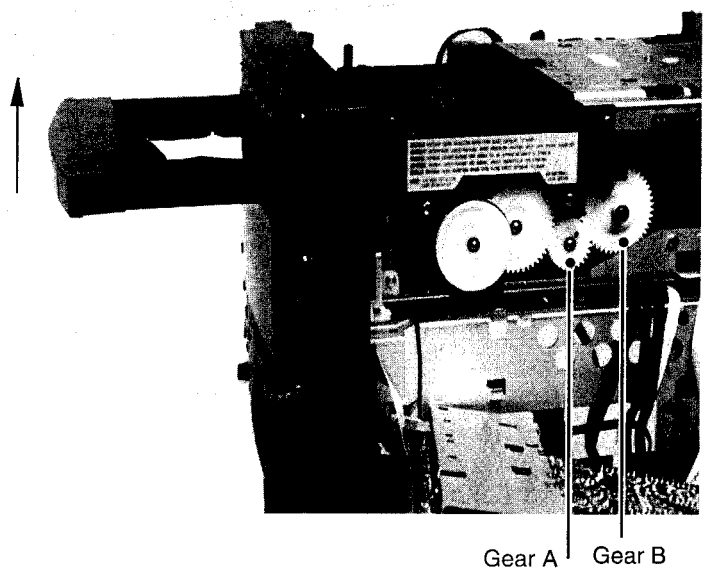

Note: If the CD tray cannot be open, do as follows:

i) Loosen 2 screw on the Combi Board. Flip the board down.

ii) Power On the set, press the CD open/close button, see that gear A is engage to gear B before disconnecting the mains supply.

iii) Rotate gear A in a clockwise direction until the CD tray comes out. Remove the Cover door, CDC

Repair position.

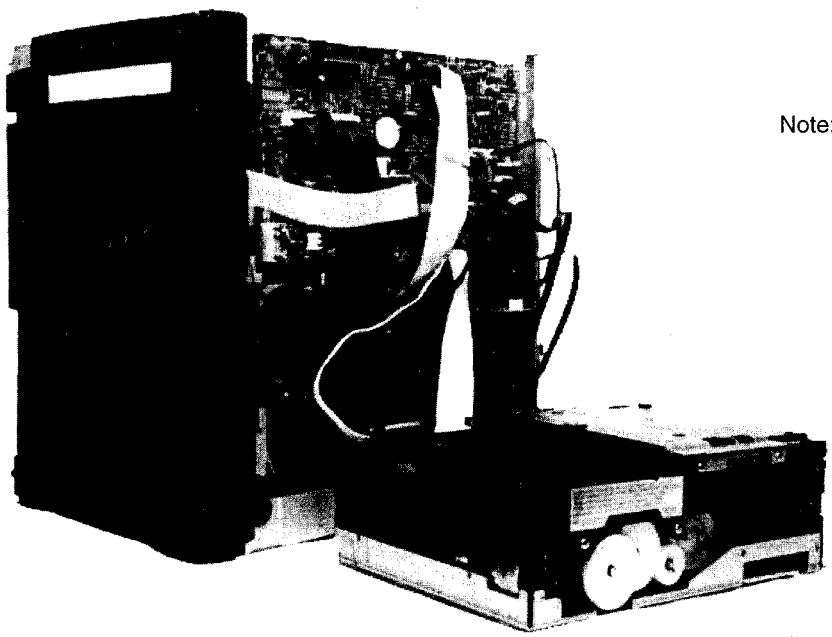

10-7

CDC7 Disassembly drawing

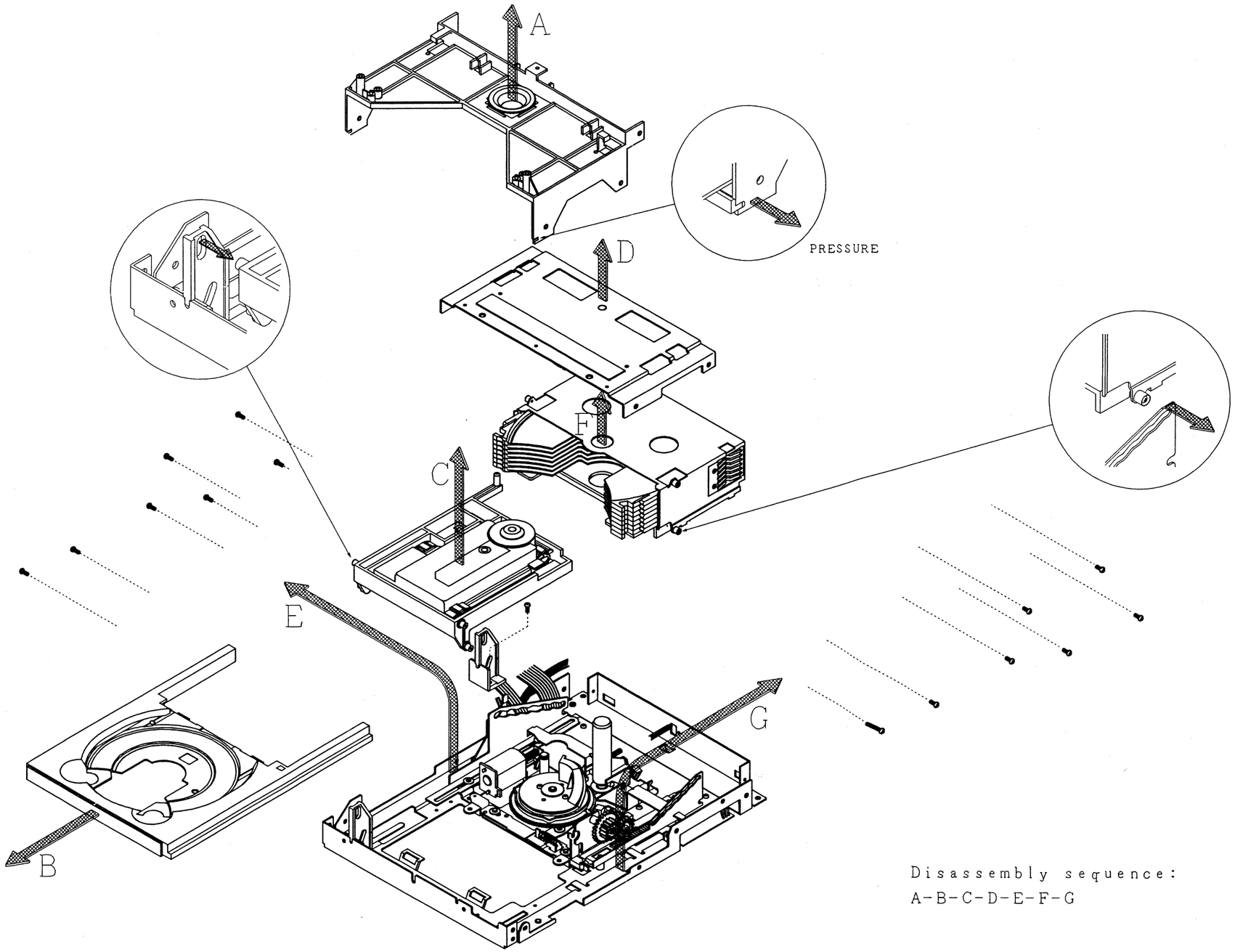

Disassembly sequence:
A-B-C-D-E-F-G

10-8

FUNCTIONAL DIAGRAM *CDC7 Module*

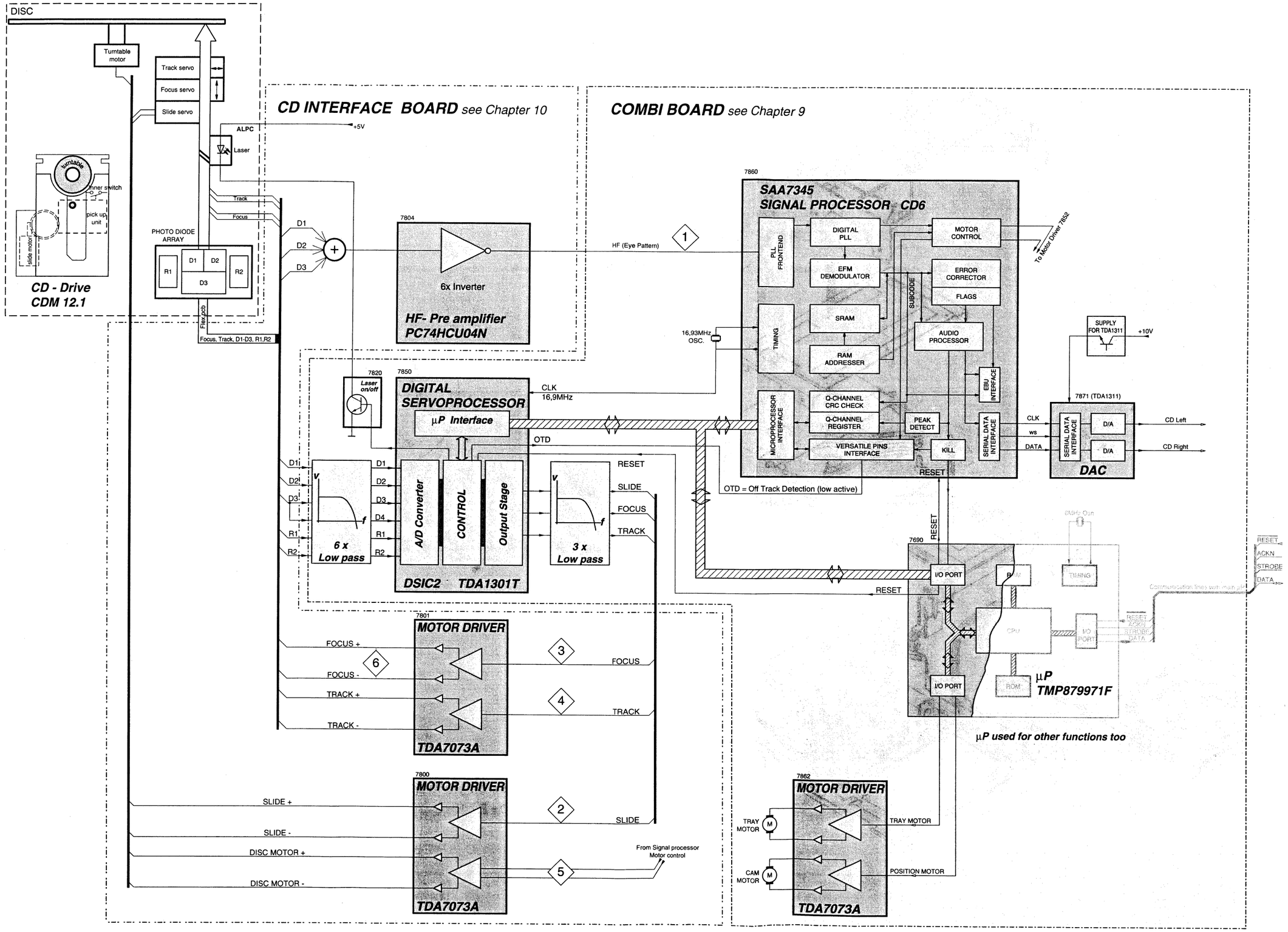

CDC MECHANISM ELECTRONICS

10-9

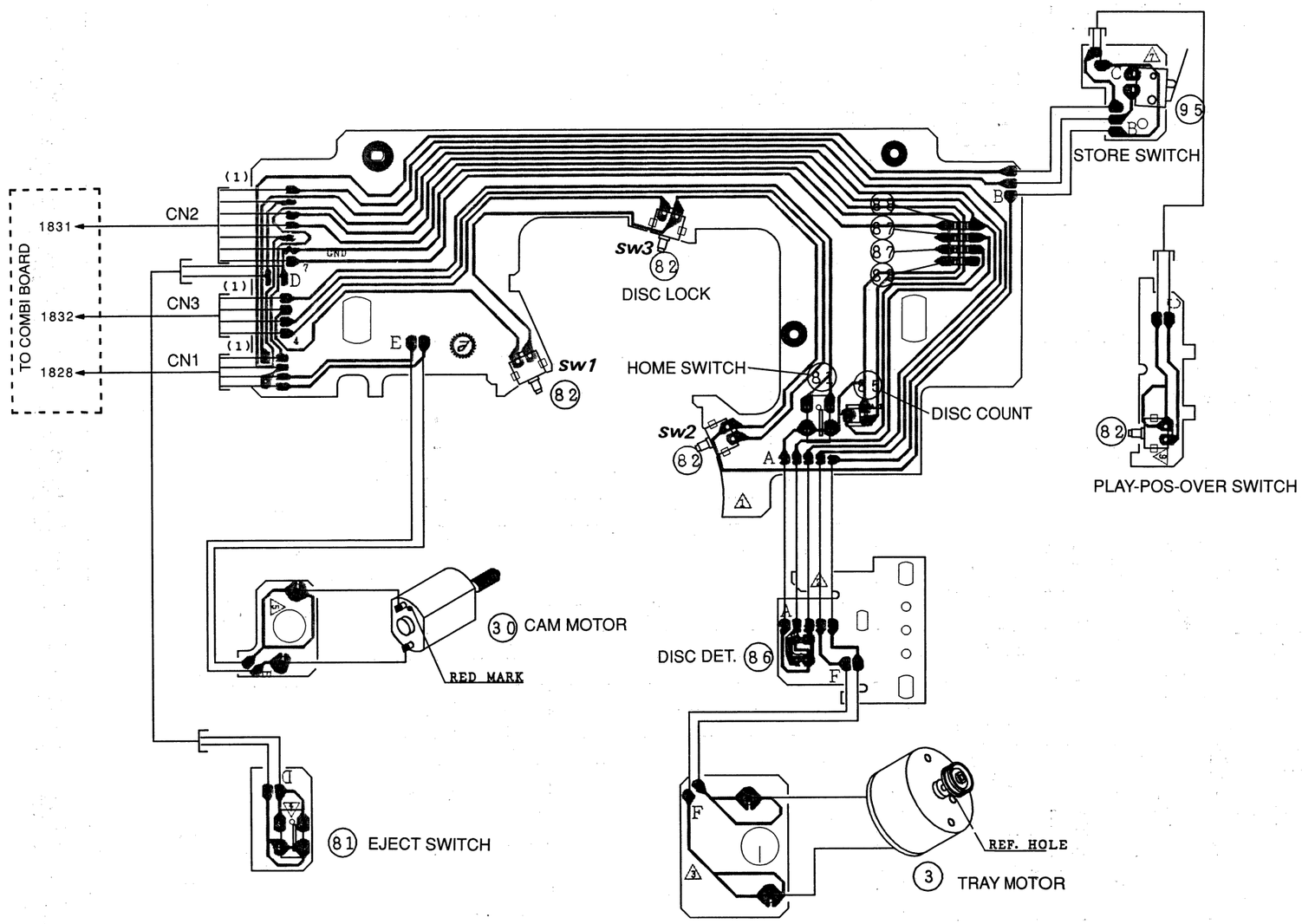

NOTE: NUMBERS IN CIRCLES REFERS TO POSITION NUMBERS IN THE CDC EXPLODED VIEW.

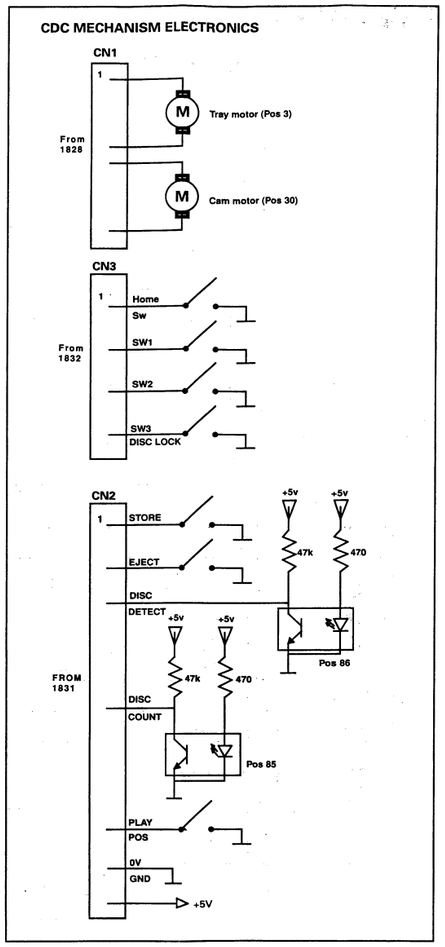

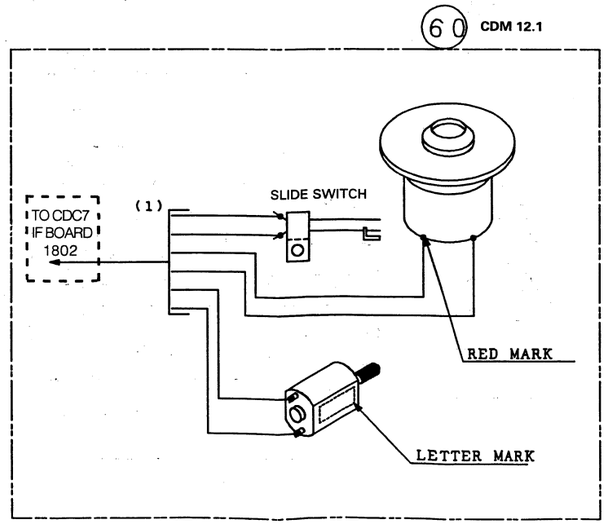

10-10

CD-INTERFACE BOARD

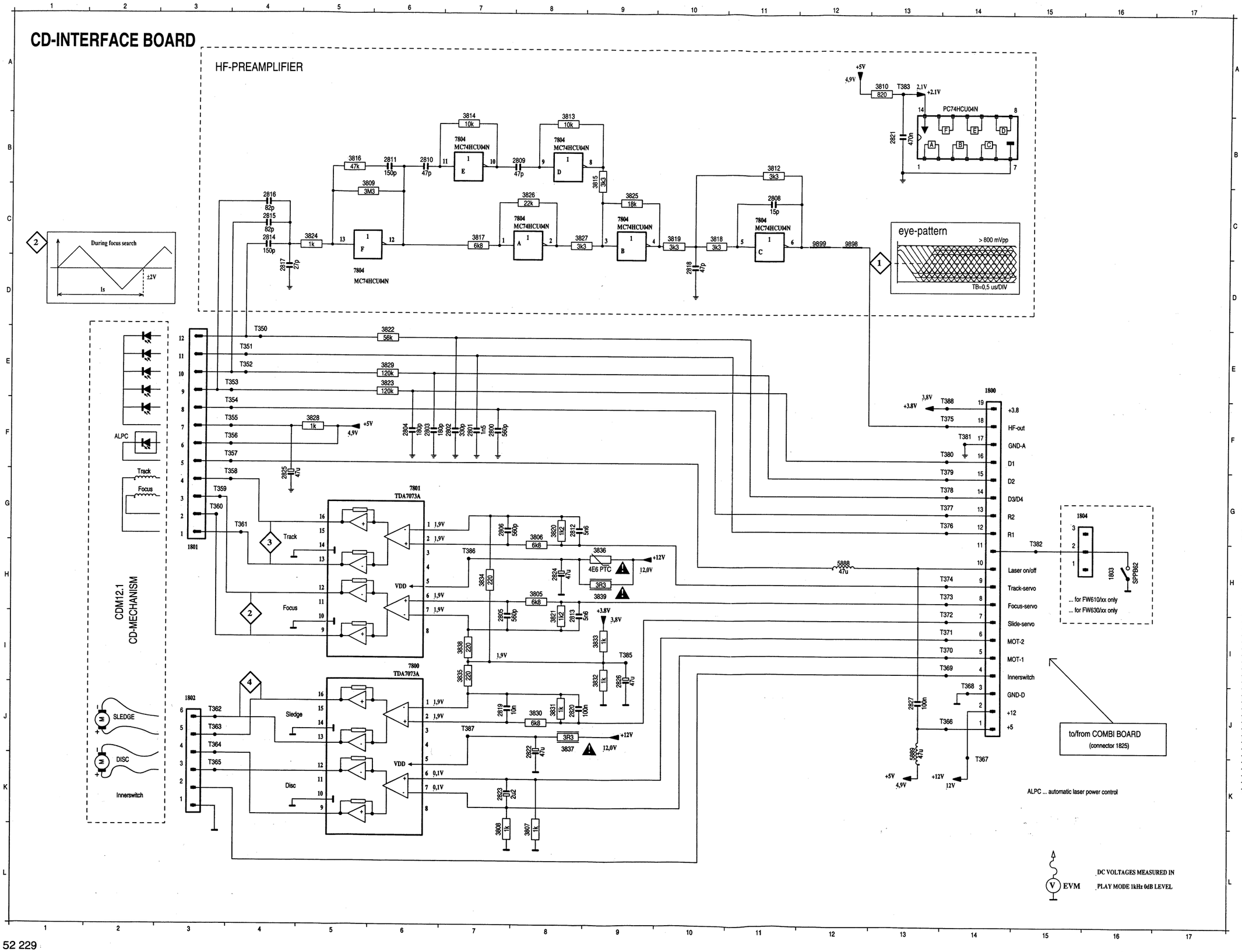

CDC7 IF BOARD Componentside view

1800 C 2	2810 B 3	2822 C 3	3812 A 3	3824 B 2	3836 A 3	9806 C 1
1801 B 2	2811 B 2	2823 C 3	3813 B 3	3825 A 2	3837 C 3	9808 C 2
1802 A 3	2812 A 2	2824 A 2	3814 B 3	3826 A 2	3838 A 2	9809 C 2
2800 A 2	2813 A 2	2825 B 1	3815 A 3	3827 A 2	5888 C 1	9810 C 2
2801 B 1	2814 B 2	2826 A 3	3816 B 2	3828 A 1	5889 A 1	9811 C 2
2802 B 1	2815 B 2	2827 C 1	3817 B 2	3829 B 2	7800 C 3	9812 C 2
2803 B 1	2816 B 2	3805 A 2	3818 A 3	3830 B 3	7801 A 1	9813 B 3
2804 B 1	2817 B 2	3806 A 2	3819 A 2	3831 C 3	7804 B 2	9814 B 3
2805 A 2	2818 A 2	3807 C 2	3820 A 2	3832 A 3	9802 A 2	9898 B 3
2806 A 2	2819 C 3	3808 C 3	3821 A 2	3833 C 3	9803 C 2	9899 B 3
2808 A 3	2820 C 3	3809 B 2	3822 B 2	3834 A 3	9804 C 3	
2809 B 3	2821 A 2	3810 A 2	3823 B 2	3835 C 3	9805 C 1	

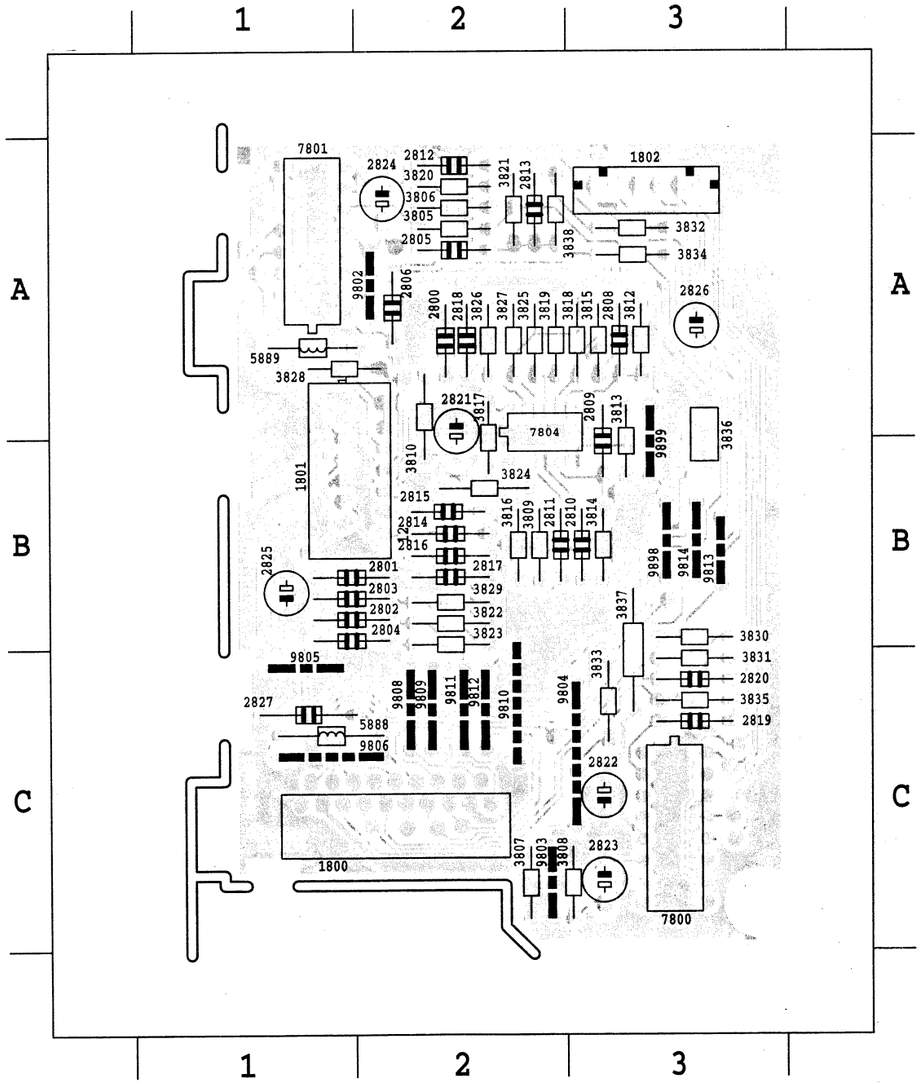

CDC7 IF BOARD Copperside view

1800 C 2	2810 B 3	2822 C 3	3812 A 3	3824 B 2	3836 A 3	9806 C 1
1801 B 2	2811 B 2	2823 C 3	3813 B 3	3825 A 2	3837 C 3	9808 C 2
1802 A 3	2812 A 2	2824 A 2	3814 B 3	3826 A 2	3838 A 2	9809 C 2
2800 A 2	2813 A 2	2825 B 1	3815 A 3	3827 A 2	5888 C 1	9810 C 2
2801 B 1	2814 B 2	2826 A 3	3816 B 2	3828 A 1	5889 A 1	9811 C 2
2802 B 1	2815 B 2	2827 C 1	3817 B 2	3829 B 2	7800 C 3	9812 C 2
2803 B 1	2816 B 2	3805 A 2	3818 A 3	3830 B 3	7801 A 1	9813 B 3
2804 B 1	2817 B 2	3806 A 2	3819 A 2	3831 C 3	7804 B 2	9814 B 3
2805 A 2	2818 A 2	3807 C 2	3820 A 2	3832 A 3	9802 A 2	9898 B 3
2806 A 2	2819 C 3	3808 C 3	3821 A 2	3833 C 3	9803 C 2	9899 B 3
2808 A 3	2820 C 3	3809 B 2	3822 B 2	3834 A 3	9804 C 3	
2809 B 3	2821 A 2	3810 A 2	3823 B 2	3835 C 3	9805 C 1	

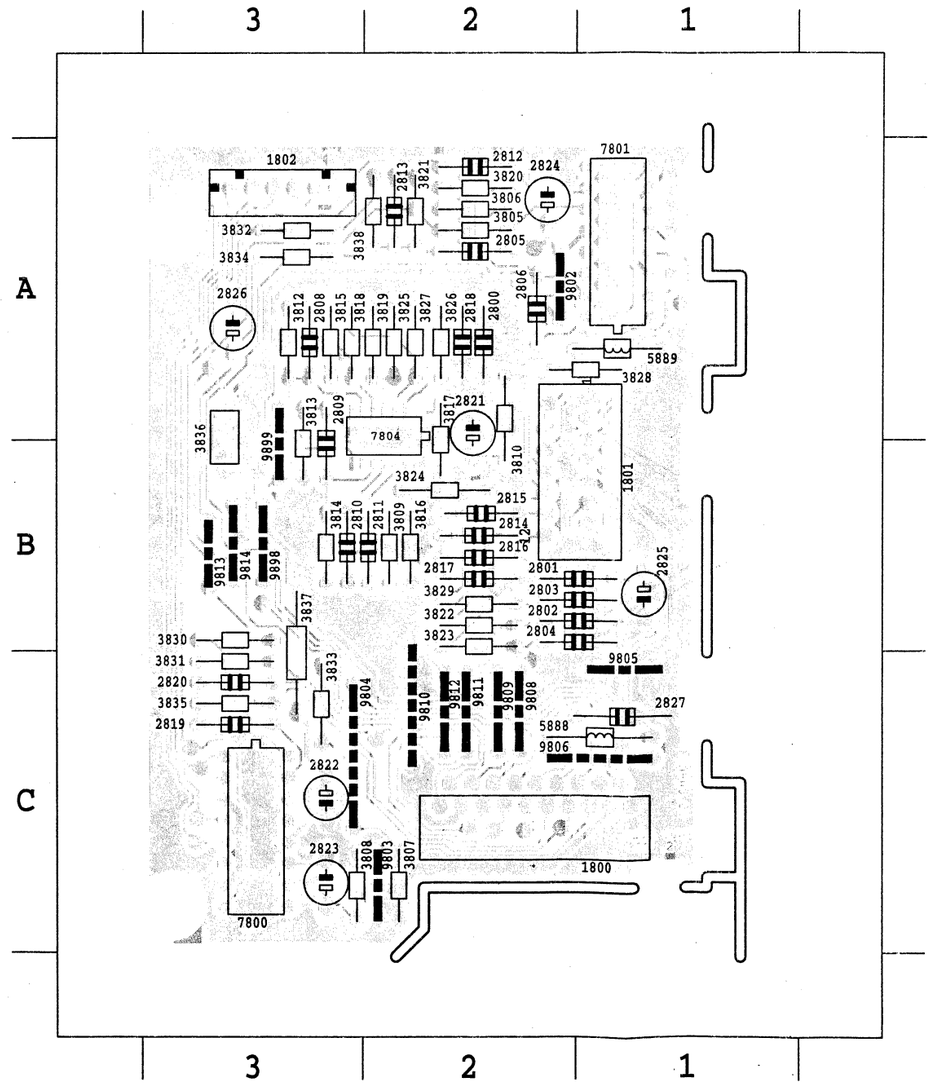

10-12

CDC7 Exploded view

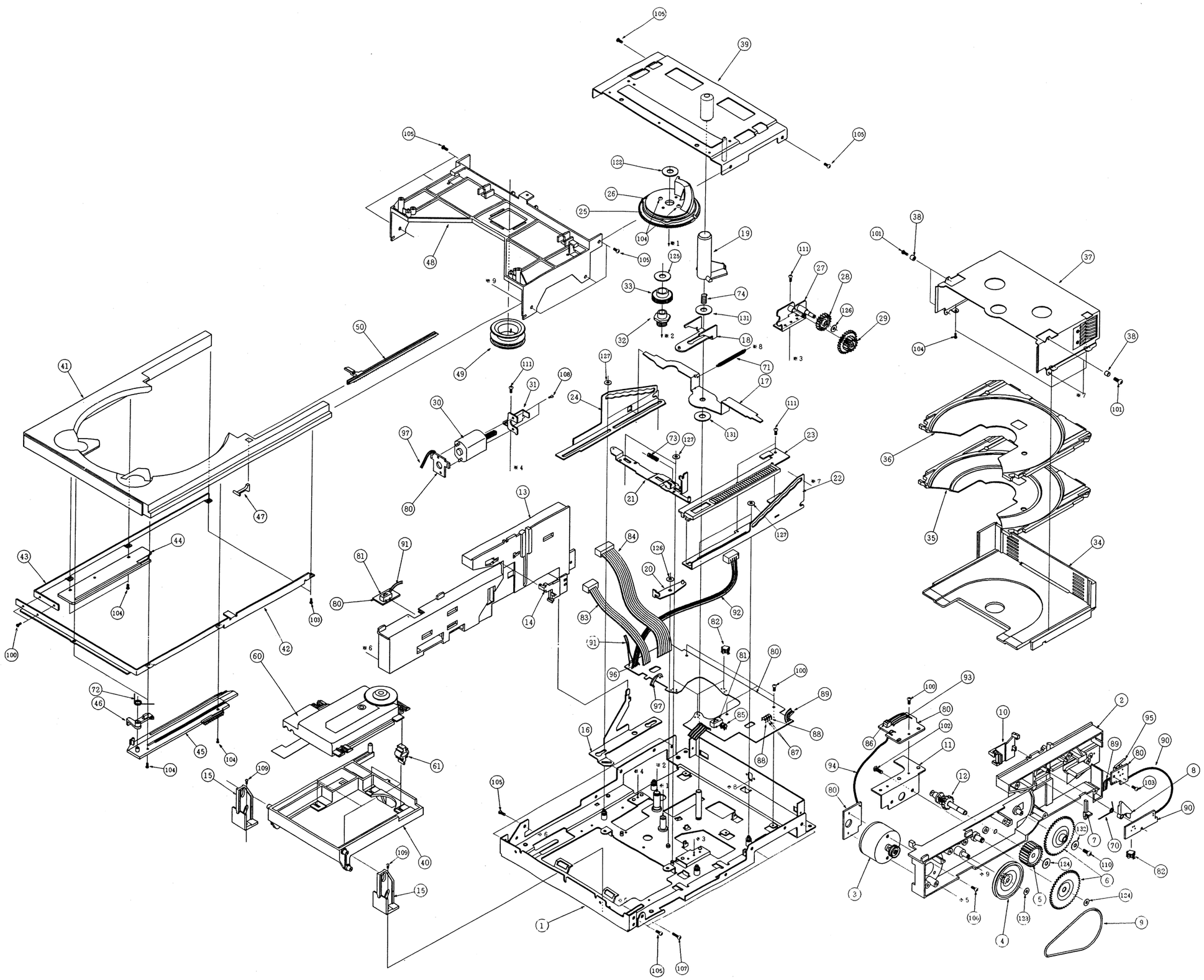

MECHANICAL PARTSLIST CDC7 CHANGER MODULE

MECHANICAL PARTS

4	4822 528 70861	PULLEY GEAR
5	4822 522 33484	CHANGE GEAR
6	4822 522 33483	GEAR
9	4822 358 10148	BELT
10	4822 404 21346	BRACKET RIGHT
12	4822 522 20457	CLUTCH ASSY
14	4822 404 21347	BRACKET LEFT
16	4822 402 50316	CARRIAGE LEVER
17	4822 402 50315	STOCKER ARM
18	4822 402 61542	LOCK PIN CAM ASSY
20	4822 402 61536	ARM CHANGE ASSY
21	4822 402 50314	LEVER CHANGE ASSY
22	4822 402 61537	STOCKER LEVER RIGHT
23	4822 522 33485	STOCKER GEAR
24	4822 402 61538	STOCKER LEVER LEFT
25	4822 522 33479	CAM GEAR
26	4822 522 33478	CAM UPPER PART
28	4822 522 33482	GEAR
29	4822 522 33481	GEAR
32	4822 522 33476	GEAR
33	4822 522 33477	GEAR CAM WHEEL
34	4822 256 92294	STOCKER
35	4822 466 93397	CARRIAGE DISC 1
36	4822 466 93398	CARRIAGE DISC 2-7
38	4822 532 12282	STOCKER SHAFT
41	4822 444 30489	TRAY
45	4822 466 93396	TRAY PLATE RIGHT
46	4822 402 61539	LOCK ARM
47	4822 402 61541	LATCH LEVER
49	4822 532 61255	CLAMPER ASSY
50	4822 535 93488	SHUTTLE
60	4822 691 30278	CDM12
61	4822 325 50215	SUSPENSION
70	4822 492 42713	SPRING TORSION
71	4822 492 33459	SPRING STOCKER ARM
72	4822 492 42714	SPRING SHUTTLE
73	4822 492 33461	SPRING LEVER CHANGE
74	4822 492 52407	SPRING DISC LOCK PIN
122	4822 532 52591	WASHER
123	4822 532 52588	WASHER
124	4822 532 52589	WASHER
125	4822 530 70124	WASHER
126	4822 532 52586	WASHER
127	4822 532 52587	WASHER
131	4822 532 52465	WASHER

MISCELLANEOUS

3	4822 361 21725	TRAY MOTOR
7	4822 277 11473	LEVER SWITCH
30	4822 361 21726	CAM MOTOR
81	4822 271 30845	SWITCH
82	4822 271 30847	SWITCH
85	4822 130 91369	SENSOR
86	4822 130 91368	SENSOR
87	4822 117 11343	CR16 470E PITCH 5MM
88	4822 117 11344	CR16 47k PITCH 5MM
95	4822 271 30846	SWITCH

ELECTRICAL PARTSLIST CDC7 INTERFACE BOARD

MISCELLANEOUS

1800	4822 267 60412	FLEX PRINT CONNECTOR
1803	4822 276 13503	SWITCH

INTEGRATED CIRCUITS

7800	4822 209 32852	TDA7073A/N2
7801	4822 209 32852	TDA7073A/N2
7804	5322 209 11517	PC74HCU04T

COILS

5888	4822 157 53906	47µH	10%
5889	4822 157 53906	47µH	10%

RESISTORS

3805	4822 116 52296	6k8	5%	0,5W
3806	4822 116 52296	6k8	5%	0,5W
3807	4822 050 11002	1k	5%	0,2W
3808	4822 050 11002	1k	5%	0,2W
3809	4822 111 50499	3M3	5%	0,2W
3810	4822 116 52231	820R	5%	0,5W
3812	4822 116 52269	3k3	5%	0,5W
3813	4822 116 83864	10k	5%	0,5W
3814	4822 116 83864	10k	5%	0,5W
3815	4822 116 52269	3k3	5%	0,5W
3816	4822 116 52284	47k	5%	0,5W
3817	4822 116 52296	6k8	5%	0,5W
3818	4822 116 52269	3k3	5%	0,5W
3819	4822 116 52269	3k3	5%	0,5W
3820	4822 116 52207	1k2	5%	0,5W
3821	4822 116 52207	1k2	5%	0,5W
3822	4822 116 52291	56k	5%	0,5W
3823	4822 116 52239	120k	5%	0,5W
3824	4822 050 11002	1k	5%	0,2W
3825	4822 116 52251	18k	5%	0,5W
3826	4822 116 52257	22k	5%	0,5W
3827	4822 116 52269	3k3	5%	0,5W
3828	4822 050 11002	1k	5%	0,2W
3829	4822 116 52239	120k	5%	0,5W
3830	4822 116 52296	6k8	5%	0,5W
3831	4822 050 11002	1k	5%	0,2W
3832	4822 050 11002	1k	5%	0,2W
3833	4822 050 11002	1k	5%	0,2W
3834	4822 116 52215	220R	5%	0,16W
3835	4822 116 52215	220R	5%	0,16W
3836	4822 116 40227	PTC	4R6	
3837	4822 052 10338	3R3		NFR25
3838	4822 116 52215	220R	5%	0,16W

CAPACITORS

2800	4822 122 10459	560pF	10%	50V
2801	4822 126 12878	1,5nF	10%	16V
2802	4822 126 12787	330pF	10%	50V
2803	4822 126 10053	180pF	10%	50V
2804	4822 126 10053	180pF	10%	50V
2805	4822 122 10459	560pF	10%	50V
2806	4822 122 10459	560pF	10%	50V
2808	4822 122 10462	15pF	5%	50V
2809	4822 122 33848	47pF	5%	50V

CAPACITORS

2810	4822 122 33848	47pF	5%	50V
2811	4822 122 33849	150pF	10%	50V
2812	4822 126 13098	5,6nF	20%	16V
2813	4822 126 13098	5,6nF	20%	16V
2814	4822 122 33849	150pF	10%	50V
2815	4822 122 10319	82pF	5%	50V
2816	4822 122 10319	82pF	5%	50V
2817	4822 122 33192	27pF	5%	50V
2818	4822 122 33848	47pF	5%	50V
2819	4822 121 51387	10nF	20%	16V
2820	4822 126 12882	100nF	20%	50V
2821	4822 124 41407	0,47µF	20%	63V
2822	4822 124 40433	47µF	20%	25V
2823	4822 124 41407	0,47µF	20%	63V
2824	4822 124 40433	47µF	20%	25V
2825	4822 124 40433	47µF	20%	25V
2826	4822 124 40433	47µF	20%	25V
2827	4822 126 12882	100nF	20%	50V

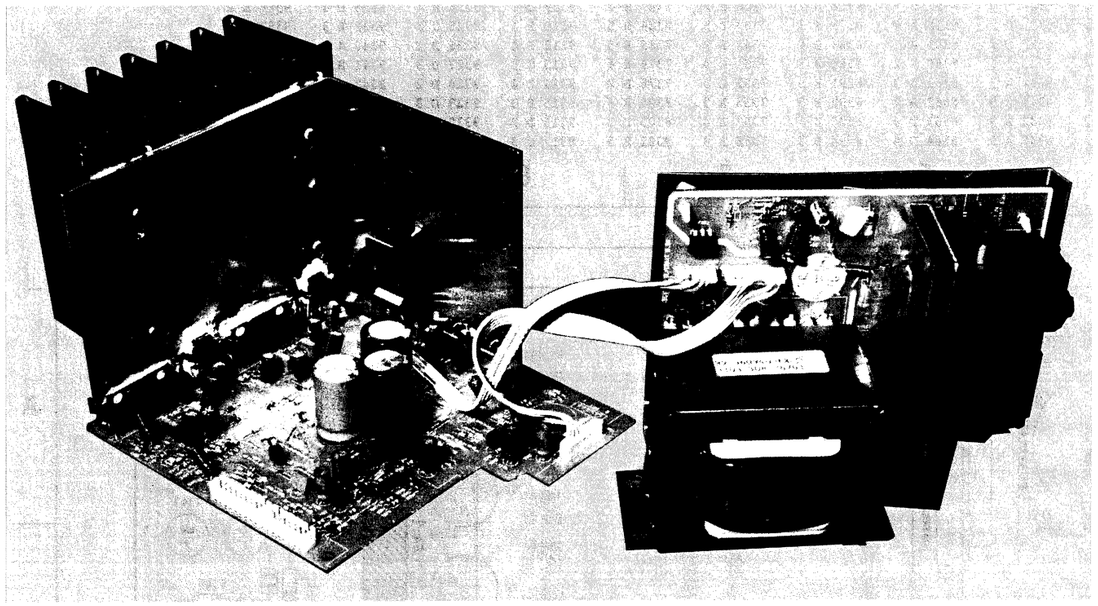

POWER BOARD

TABLE OF CONTENTS

CIRCUIT DESCRIPTION

The mains transformer 1008 is fed with a preregulated voltage. The preregulation is done by a power MOSFET 7351. To be able to handle AC, the voltage for the FET is rectified by a diode bridge 6351, 6352, 6353 and 6354. The control of the MOSFET is depending of the mode of the set.

In Power on mode the MOSFET is controled by the optocoupler 7353 via resistor 3345. The supply for the optocoupler is created via resistor 3343 and the diode 6344. Stabilisation and filtering is done by the zenerdiode 6345 and the elcap 2343. The optocoupler is activated by the transistor 7369. The emitter of this transistor is connected to the stabilized voltage +5,6V via resistor 3386. The base is connected via zenerdiode 6384 and resistor 3383 to the voltage +16V. This enables the transistor to compare the voltage +16V with the voltage +5,6V. In case of a too low +16V the transistor conducts and makes via the optocoupler also the MOSFET conducting. In case of a too high +16V both semiconductors become nonconducting.

To provide sufficient stability in the whole control loop, some measures are taken. On the primary side a feed back via resistor 3341 and diode 6341 reduces the overall gain. On the secondary side the resistor 3386 works in similar way. The RC network 2379/3379 reduces the AC gain while the DC gain remains unaffected.

Transients could cause too high current peaks in the FET. To safeguard the FET, the current is sensed by the resistor 3357 and the transistor 7342. In case of overcurrent the thyristor 7352 fires and bypass the FET.
To avoid a too high supply in case of fault condition the thyristor 7376 is used as a crowbar device. The zenerdiode 6386 senses the voltage +24V and fires the thyristor in case of excessive voltage. The fuses will be blown.

In the ECO mode (Stand by and display off) it is only necessary to supply the microprocessor and the infrared eye. This can be done with a drastically reduced voltage on the transformer. To activate that mode, the line STBY is switched by the microprocessor to ground. This makes the transistor 7366 conducting. As a consequence the +12V stabilisation, realized by transistors 7360, 7363 and 7364, is switched off. Additional the transistor 7368 is conducting and switches transistor 7369 off. The control loop via the optocoupler is now cut off. The control is working only with components connected to the primary side of the transformer. Via the diode 6344 still a stabilized voltage of 12V is created. The voltage at the anode of the diode 6344 is during one half cycle about +12V and during the other half cycle below zero depending on the voltage across the transformer.

Integration by resistor 3349 and capacitor 2344 results a triangle voltage, fed via diode 6342 to the gate of the FET. The positive peak happens at the zero crossing of the mains, switching on the FET for a short time. The average DC level is depending on the transformer voltage. Increasing transformer voltage shifts the DC level to negative. This is reducing the conduction time of the FET.

11-2

0011 A 2	1357 A 8	2312 B 1	2330 B 1	2358 A 5	2372 E 4	3305 E 2	3321 E 2	3338 C 1	3356 B 1	3371 A 5	3386 B 5	6306 D 2	6344 B 9	6365 D 4	6395 B 3	7359 B 4	9302 D 6	9318 C 3	9332 D 2	9350 C 9	9365 B 5
0013 A 6	1358 A 8	2313 E 3	2331 E 4	2359 C 4	2373 D 4	3307 E 2	3322 C 2	3339 C 8	3357 C 9	3372 A 5	3387 D 5	6307 D 2	6345 B 9	6366 D 5	6396 B 6	7360 A 3	9303 D 3	9319 E 4	9333 D 2	9351 D 7	9366 D 1
0014 A 1	1359 B 8	2315 E 2	2333 E 5	2360 C 3	2374 B 3	3308 C 2	3323 E 1	3341 C 9	3358 B 9	3373 D 5	3388 B 5	6308 C 2	6350 B 4	6367 D 5	6397 B 6	7363 B 2	9304 D 6	9320 D 1	9334 B 5	9352 E 2	9367 A 1
1008 B 7	1360 A 5	2316 C 2	2334 D 5	2361 C 3	2375 A 3	3309 E 1	3325 E 2	3343 C 8	3359 D 2	3374 A 3	3389 B 2	6309 E 4	6351 D 9	6368 D 5	7301 E 1	7364 B 3	9305 B 1	9321 B 4	9335 B 4	9353 C 2	9368 A 1
1301 E 3	2301 E 2	2317 E 1	2335 C 6	2362 A 2	2376 D 4	3310 C 1	3326 B 2	3345 C 9	3360 A 3	3375 B 3	3390 E 5	6310 E 2	6352 D 9	6369 B 4	7302 C 1	7365 B 4	9307 D 3	9322 B 4	9336 B 5	9354 E 2	9850 B 2
1302 D 5	2302 C 2	2318 C 1	2336 D 6	2363 B 2	2377 B 5	3311 E 1	3327 D 2	3346 B 9	3361 A 3	3376 D 5	3391 E 5	6325 E 2	6353 D 9	6373 D 5	7305 D 1	7366 C 4	9308 A 5	9323 E 6	9337 B 3	9355 C 2	9851 B 2
1303 E 4	2303 E 2	2319 E 2	2337 E 6	2364 A 2	2378 B 5	3312 B 1	3328 C 2	3347 E 2	3362 B 3	3377 E 4	3398 C 4	6326 C 2	6354 D 9	6374 D 4	7306 B 1	7367 B 4	9309 D 1	9324 E 1	9338 D 3	9356 E 2	
1304 D 6	2305 E 1	2320 B 2	2338 C 2	2365 A 1	2379 B 6	3313 E 3	3329 D 3	3349 A 9	3363 B 3	3378 B 5	3399 A 4	6331 E 2	6358 A 4	6375 B 3	7307 D 3	7368 B 5	9310 B 1	9325 C 3	9339 E 3	9357 D 2	
1345 A 9	2306 C 1	2322 D 3	2339 E 2	2366 A 1	2390 E 4	3315 E 2	3331 E 2	3350 A 9	3364 B 3	3379 B 5	5350 D 8	6332 C 2	6359 A 6	6384 B 4	7342 B 9	7369 B 5	9312 B 4	9326 B 1	9340 A 2	9358 E 2	
1346 B 9	2307 E 1	2323 D 1	2343 B 9	2367 A 3	2391 B 2	3316 C 2	3333 E 4	3351 A 9	3365 A 2	3380 E 4	6301 D 2	6335 D 1	6360 A 2	6386 B 3	7351 C 9	7374 E 4	9313 C 5	9327 D 3	9341 B 5	9360 A 6	
1350 E 9	2308 C 1	2324 B 1	2344 B 9	2368 A 3	3301 E 3	3317 E 1	3334 D 1	3352 C 1	3367 C 4	3382 B 5	6302 D 2	6340 A 9	6361 A 2	6391 E 5	7352 C 9	7376 B 2	9314 C 4	9328 D 2	9342 C 4	9361 A 4	
1352 E 9	2309 E 1	2327 E 6	2345 B 9	2369 B 4	3302 E 3	3318 C 1	3335 E 3	3353 E 1	3368 C 4	3383 B 5	6303 D 2	6341 A 9	6362 A 3	6392 E 5	7353 A 9	8304 E 6	9315 B 3	9329 D 3	9343 A 4	9362 B 4	
1355 E 7	2310 C 1	2328 E 6	2351 E 9	2370 D 4	3303 E 3	3319 E 2	3336 D 6	3354 B 9	3369 A 5	3384 C 4	6304 D 2	6342 A 9	6363 D 4	6393 E 5	7357 A 4	8305 D 3	9316 D 2	9330 D 3	9344 C 3	9363 A 3	
1356 A 8	2311 E 1	2329 D 1	2357 A 4	2371 C 5	3304 E 3	3320 C 2	3337 E 6	3355 D 1	3370 A 5	3385 B 4	6305 E 2	6343 A 9	6364 D 4	6394 B 3	7358 A 4	9301 E 5	9317 C 3	9331 D 4	9346 E 3	9364 B 4	

COMPONENT SIDE VIEW

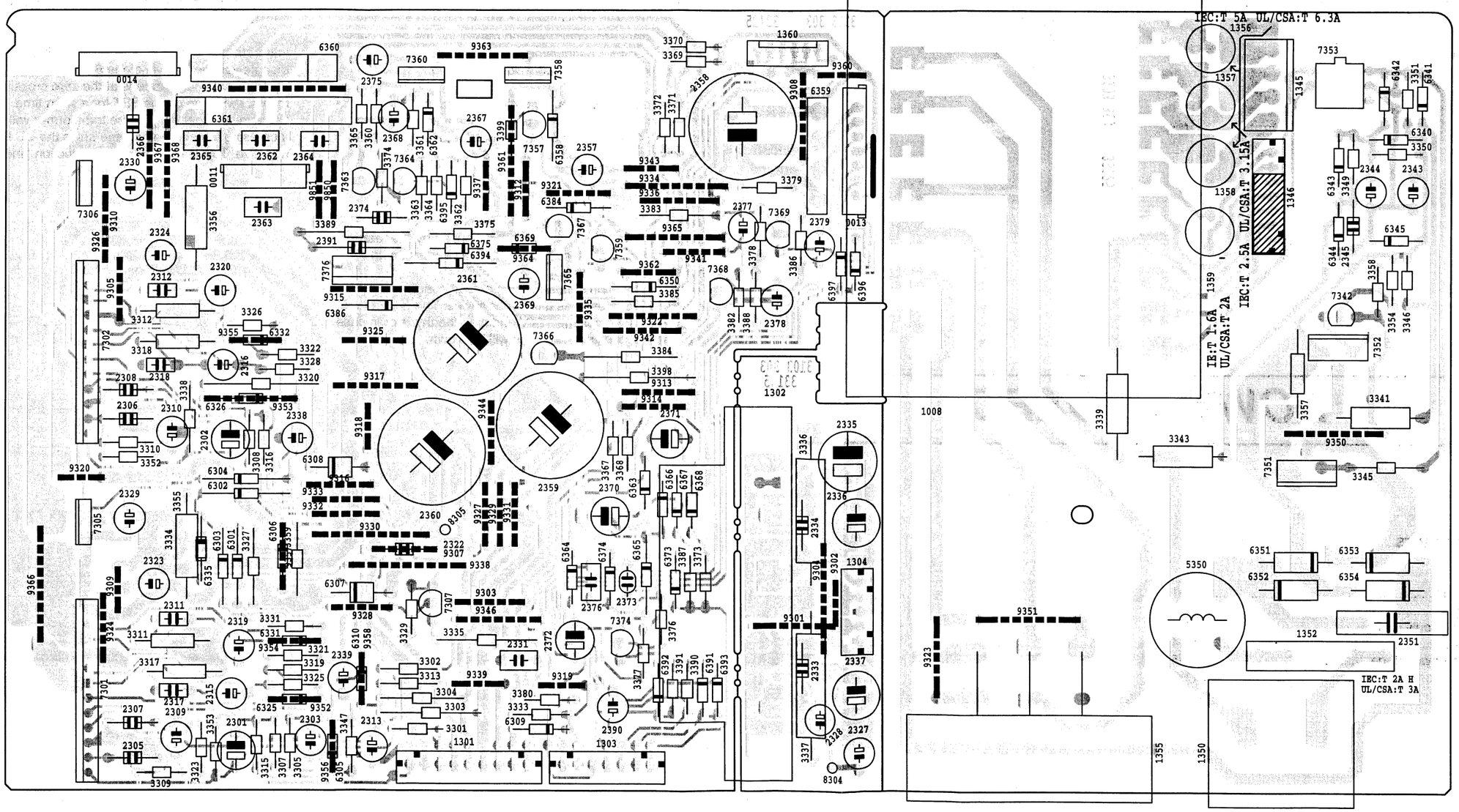

11-3

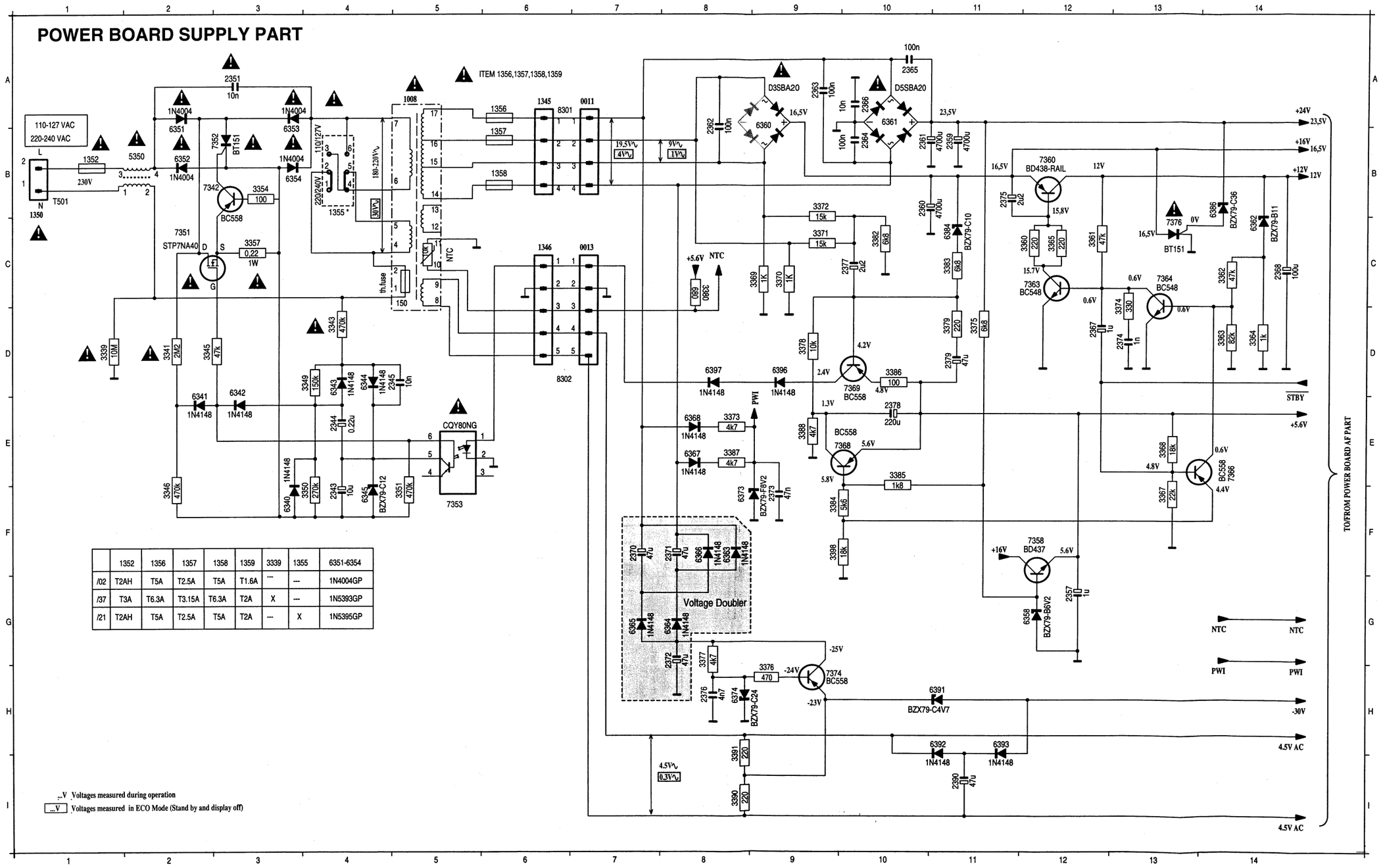

	1352	1356	1357	1358	1359	3339	1355	6351-6354
/02	T2AH	T5A	T2.5A	T5A	T1.6A	---	---	1N4004GP
/37	T3A	T6.3A	T3.15A	T6.3A	T2A	X	---	1N5393GP
/21	T2AH	T5A	T2.5A	T5A	T2A	---	X	1N5395GP

...V Voltages measured during operation

...V Voltages measured in ECO Mode (Stand by and display off)

11-4

0011 A 2	1357 A 8	2312 B 1	2330 B 1	2358 A 5	2372 E 4	3305 E 2	3321 E 2	3338 C 1	3356 B 1	3371 A 5	3386 B 5	6306 D 2	6344 B 9	6365 D 4	6395 B 3	7359 B 4	9302 D 6	9318 C 3	9332 D 2	9350 C 9	9365 B 5
0013 A 6	1358 A 8	2313 E 3	2331 E 4	2359 C 4	2373 D 4	3307 E 2	3322 C 2	3339 C 8	3357 C 9	3372 A 5	3387 D 5	6307 D 2	6345 B 9	6366 D 5	6396 B 6	7360 A 3	9303 D 3	9319 E 4	9333 D 2	9351 D 7	9366 D 1
0014 A 1	1359 B 8	2315 E 2	2333 E 5	2360 C 3	2374 B 3	3308 C 2	3323 E 1	3341 C 9	3358 B 9	3373 D 5	3388 B 5	6308 C 2	6350 B 4	6367 D 5	6397 B 6	7363 B 2	9304 D 6	9320 D 1	9334 B 5	9352 E 2	9367 A 1
1008 B 7	1360 A 5	2316 C 2	2334 D 5	2361 C 3	2375 A 3	3309 E 1	3325 E 2	3343 C 8	3359 D 2	3374 A 3	3389 B 2	6309 E 4	6351 D 9	6368 D 5	7301 E 1	7364 B 3	9305 B 1	9321 B 4	9335 B 4	9353 C 2	9368 A 1
1301 E 3	2301 E 2	2317 E 1	2335 C 6	2362 A 2	2376 D 4	3310 C 1	3326 B 2	3345 C 9	3360 A 3	3375 B 3	3390 E 5	6310 E 2	6352 D 9	6369 B 4	7302 C 1	7365 B 4	9307 D 3	9322 B 4	9336 B 5	9354 E 2	9850 B 2
1302 D 5	2302 C 2	2318 C 1	2336 D 6	2363 B 2	2377 B 5	3311 E 1	3327 D 2	3346 B 9	3361 A 3	3376 D 5	3391 E 5	6325 E 2	6353 D 9	6373 D 5	7305 D 1	7366 C 4	9308 A 5	9323 E 6	9337 B 3	9355 C 2	9851 B 2
1303 E 4	2303 E 2	2319 E 2	2337 E 6	2364 A 2	2378 B 5	3312 B 1	3328 C 2	3347 E 2	3362 B 3	3377 E 4	3398 C 4	6326 C 2	6354 D 9	6374 D 4	7306 B 1	7367 B 4	9309 D 1	9324 E 1	9338 D 3	9356 E 2	
1304 D 6	2305 E 1	2320 B 2	2338 C 2	2365 A 1	2379 B 6	3313 E 3	3329 D 3	3349 A 9	3363 B 3	3378 B 5	3399 A 4	6331 E 2	6358 A 4	6375 B 3	7307 D 3	7368 B 5	9310 B 1	9325 C 3	9339 E 3	9357 D 2	
1345 A 9	2306 C 1	2322 D 3	2339 E 2	2366 A 1	2390 E 4	3315 E 2	3331 E 2	3350 A 9	3364 B 3	3379 B 5	5350 D 8	6332 C 2	6359 A 6	6384 B 4	7342 B 9	7369 B 5	9312 B 4	9326 B 1	9340 A 2	9358 E 2	
1346 B 9	2307 E 1	2323 D 1	2343 B 9	2367 A 3	2391 B 2	3316 C 2	3333 E 4	3351 A 9	3365 A 2	3380 E 4	6301 D 2	6335 D 1	6360 A 2	6386 B 3	7351 C 9	7374 E 4	9313 C 5	9327 D 3	9341 B 5	9360 A 6	
1350 E 9	2308 C 1	2324 B 1	2344 B 9	2368 A 3	3301 E 3	3317 E 1	3334 D 1	3352 C 1	3367 C 4	3382 B 5	6302 D 2	6340 A 9	6361 A 2	6391 E 5	7352 C 9	7376 B 2	9314 C 4	9328 D 2	9342 C 4	9361 A 4	
1352 E 9	2309 E 1	2327 E 6	2345 B 9	2369 B 4	3302 E 3	3318 C 1	3335 E 3	3353 E 1	3368 C 4	3383 B 5	6303 D 2	6341 A 9	6362 A 3	6392 E 5	7353 A 9	8304 E 6	9315 B 3	9329 D 3	9343 A 4	9362 B 4	
1355 E 7	2310 C 1	2328 E 6	2351 E 9	2370 D 4	3303 E 3	3319 E 2	3336 D 6	3354 B 9	3369 A 5	3384 C 4	6304 D 2	6342 A 9	6363 D 4	6393 E 5	7357 A 4	8305 D 3	9316 D 2	9330 D 3	9344 C 3	9363 A 3	
1356 A 8	2311 E 1	2329 D 1	2357 A 4	2371 C 5	3304 E 3	3320 C 2	3337 E 6	3355 D 1	3370 A 5	3385 B 4	6305 E 2	6343 A 9	6364 D 4	6394 B 3	7358 A 4	9301 E 5	9317 C 3	9331 D 4	9346 E 3	9364 B 4	

COMPONENT SIDE VIEW

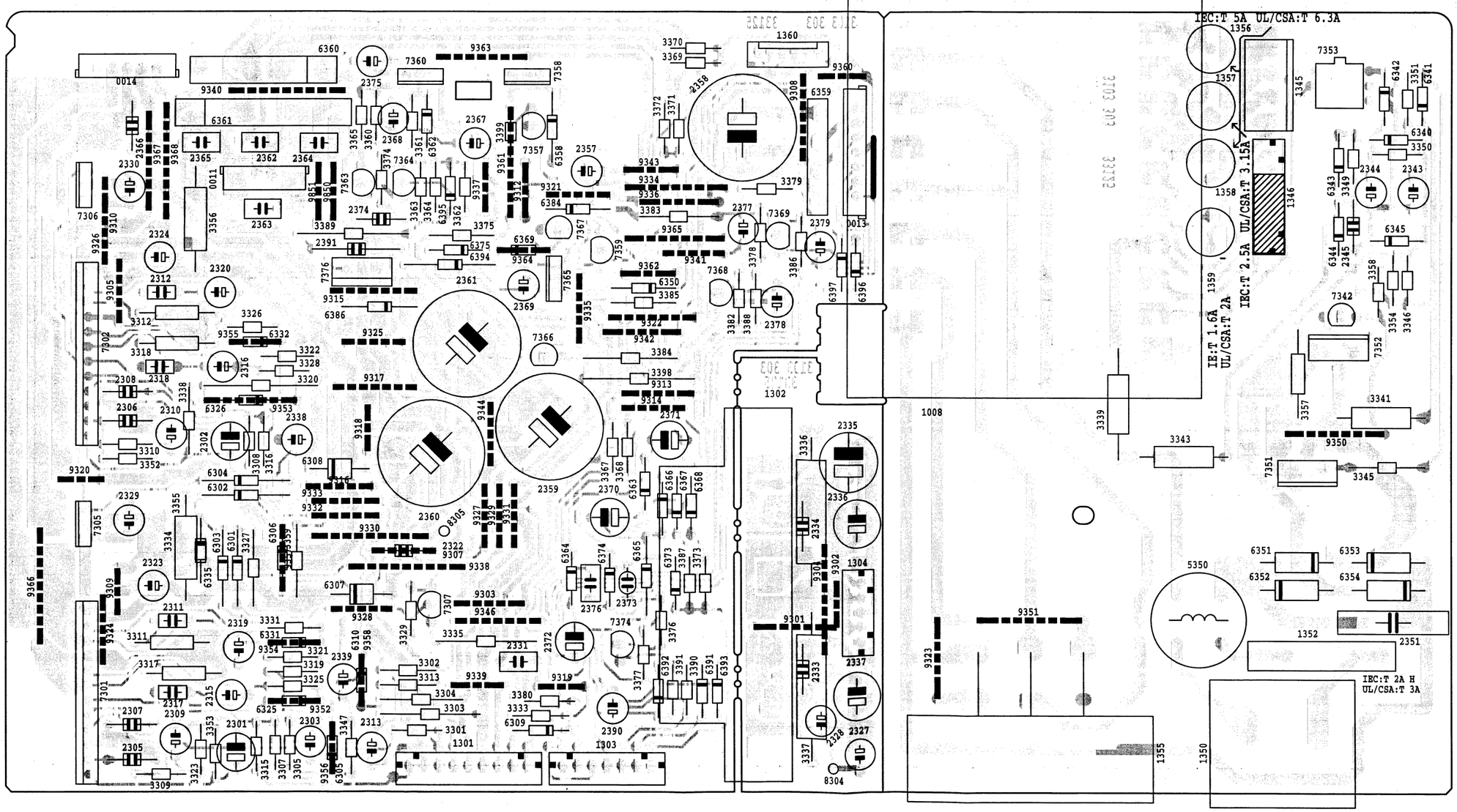

11-5

POWER BOARD AF PART

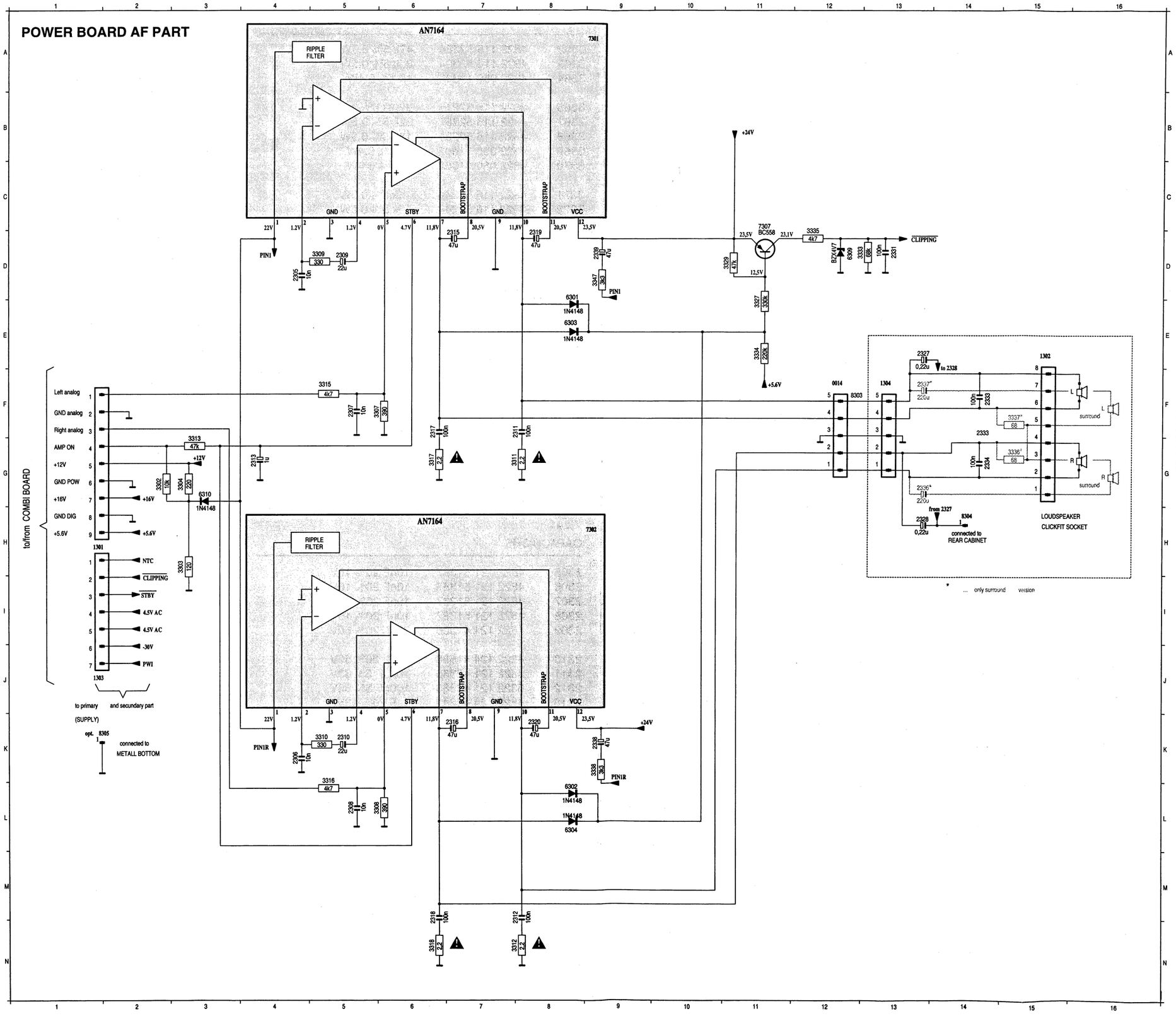

ELECTRICAL PARTS - POWER BOARD

MISCELLANEOUS

		4822 492 71733	Clip AN7164
		4822 492 71734	Spring Clip TO126
		4822 255 40179	Spring Clip TO220
		4822 492 71704	Fixation Rectifier
1302		4822 267 31176	Speaker socket
1350	⚠	4822 265 31015	Mains socket
1352	⚠	5322 253 30373	Fuse T2A 250V
1355	⚠	4822 272 10269	Voltage Selector /21
1356	⚠	4822 071 55002	Fuse T5A 250V
1357	⚠	4822 071 52502	Fuse T2.5A 250V
1358	⚠	4822 071 55002	Fuse T5A 250V

DIODES

6301		4822 130 30621	1N4148
6302		4822 130 30621	1N4148
6303		4822 130 30621	1N4148
6304		4822 130 30621	1N4148
6309		4822 130 34174	BZX79-C4V7
6310		4822 130 30621	1N4148
6340		4822 130 30621	1N4148
6341		4822 130 30621	1N4148
6342		4822 130 30621	1N4148
6343		4822 130 30621	1N4148
6344		4822 130 30621	1N4148
6345		4822 130 34197	BZX79-C12
6351	⚠	4822 130 83362	1N4004GP /22
6351	⚠	4822 130 83928	1N5395GP /21
6352	⚠	4822 130 83362	1N4004GP /22
6352	⚠	4822 130 83928	1N5395GP /21
6353	⚠	4822 130 83362	1N4004GP /22
6353	⚠	4822 130 83928	1N5395GP /21
6354	⚠	4822 130 83362	1N4004GP /22
6354	⚠	4822 130 83928	1N5395GP /21
6358		4822 130 34167	BZX79-B6V2
6360		4822 130 82079	D3SBA20
6361		4822 130 82078	D5SBA20
6362		4822 130 34488	BZX79-B11
6363		4822 130 30621	1N4148
6364		4822 130 30621	1N4148
6365		4822 130 30621	1N4148
6366		4822 130 30621	1N4148
6367		4822 130 30621	1N4148
6368		4822 130 30621	1N4148
6373		4822 130 34382	BZX79-F8V2
6374		4822 130 34441	BZX79-F22
6384		4822 130 61219	BZX79-C10
6386		4822 130 34368	BZX79-C36
6391		4822 130 34174	BZX79-C4V7
6392		4822 130 30621	1N4148
6393		4822 130 30621	1N4148
6396		4822 130 30621	1N4148
6397		4822 130 30621	1N4148

TRANSISTORS

7307		5322 130 60068	BC558C
7342		5322 130 60068	BC558C
7351	⚠	4822 130 63925	STP7NA40 Power FET
7352	⚠	5322 130 24081	BT151-500R
7358		4822 130 40982	BD437
7360		4822 130 40995	BD438
7363		4822 130 44196	BC548C
7364		4822 130 44196	BC548C
7366		5322 130 60068	BC558C
7368		5322 130 60068	BC558C
7369		5322 130 60068	BC558C
7374		5322 130 60068	BC558C
7376	⚠	5322 130 24081	BT151-500R

INTEGRATED CIRCUITS

7301		4822 209 90411	AN7164
7302		4822 209 90411	AN7164
7353	⚠	4822 130 91451	CQY80NG

COILS

5350	⚠	4822 157 71285	Choke Coil 400µH 30%

RESISTORS

3302		4822 116 83864	10k 5% 0.5W
3303		4822 116 52206	120Ω 5% 0.5W
3304		4822 116 52215	220Ω 5% 0.5W
3307		4822 116 52222	390Ω 5% 0.5W
3308		4822 116 52222	390Ω 5% 0.5W
3309		4822 116 52219	330Ω 5% 0.5W
3310		4822 116 52219	330Ω 5% 0.5W
3311	⚠	4822 052 10228	2Ω2 5% 0.33W
3312	⚠	4822 052 10228	2Ω2 5% 0.33W
3313		4822 116 52284	47k 5% 0.5W
3315		4822 116 52283	4k7 5% 0.5W
3316		4822 116 52283	4k7 5% 0.5W
3317	⚠	4822 052 10228	2Ω2 5% 0.33W
3318	⚠	4822 052 10228	2Ω2 5% 0.33W
3327		4822 116 52272	330k 5% 0.5W
3329		4822 116 52284	47k 5% 0.5W
3333		4822 116 52297	68k 5% 0.5W
3334		4822 116 83874	220k 5% 0.5W
3335		4822 116 52283	4k7 5% 0.5W
3338		4822 116 52269	3k3 5% 0.5W
3341	⚠	4822 053 21225	2M2 5% 0.5W
3343	⚠	4822 053 21474	470k 5% 0.5W
3345		4822 116 52284	47k 5% 0.5W
3346		4822 116 52285	470k 5% 0.5W
3347		4822 116 52269	3k3 5% 0.5W
3349		4822 116 52245	150k 5% 0.5W
3350		4822 116 83878	270k 5% 0.5W
3351		4822 116 52285	470k 5% 0.5W
3354		4822 116 52175	100Ω 5% 0.5W
3357	⚠	4822 117 11744	0Ω22 5% 1W
3360		4822 116 52215	220Ω 5% 0.5W
3361		4822 116 52284	47k 5% 0.5W

11-6

ELECTRICAL PARTS - POWER BOARD

RESISTORS

3362	4822 116 52284	47k 5% 0.5W
3363	4822 116 52304	82k 5% 0.5W
3364	4822 050 11002	1k 1% 0.4W
3365	4822 116 52215	220Ω 5% 0.5W
3367	4822 116 52257	22k 5% 0.5W
3368	4822 116 52251	18k 5% 0.5W
3369	4822 050 11002	1k 1% 0.4W
3370	4822 050 11002	1k 1% 0.4W
3371	4822 116 52244	15k 5% 0.5W
3372	4822 116 52244	15k 5% 0.5W
3373	4822 116 52283	4k7 5% 0.5W
3374	4822 116 52219	330Ω 5% 0.5W
3375	4822 116 52296	6k8 5% 0.5W
3376	4822 116 52224	470Ω 5% 0.5W
3377	4822 116 52283	4k7 5% 0.5W
3378	4822 116 83864	10k 5% 0.5W
3379	4822 116 52215	220Ω 5% 0.5W
3380	4822 116 52228	680Ω 5% 0.5W
3382	4822 116 52296	6k8 5% 0.5W
3383	4822 116 52296	6k8 5% 0.5W
3384	4822 116 52289	5k6 5% 0.5W
3385	4822 116 52249	1k8 5% 0.5W
3386	4822 116 52175	100Ω 5% 0.5W
3387	4822 116 52283	4k7 5% 0.5W
3388	4822 116 52283	4k7 5% 0.5W
3390	4822 116 52215	220Ω 5% 0.5W
3391	4822 116 52215	220Ω 5% 0.5W
3398	4822 116 52251	18k 5% 0.5W

CAPACITORS

2305	4822 121 51387	10nF 20% 16V
2306	4822 121 51387	10nF 20% 16V
2307	4822 121 51387	10nF 20% 16V
2308	4822 121 51387	10nF 20% 16V
2309	4822 124 41596	22µF 20% 50V
2310	4822 124 41596	22µF 20% 50V
2311	5322 121 42386	100nF 5% 63V
2312	5322 121 42386	100nF 5% 63V
2313	4822 124 40242	1µF 20% 63V
2315	4822 124 40433	47µF 20% 25V
2316	4822 124 40433	47µF 20% 25V
2317	5322 121 42386	100nF 5% 63V
2318	5322 121 42386	100nF 5% 63V
2319	4822 124 40433	47µF 20% 25V
2320	4822 124 40433	47µF 20% 25V
2323	4822 124 40242	1µF 20% 63V
2324	4822 124 40242	1µF 20% 63V
2327	4822 124 40746	0.22µF 20% 63V
2328	4822 124 40746	0.22µF 20% 63V
2331	5322 121 42386	100nF 5% 63V
2333	4822 126 12882	100nF +80/-20% 50V
2334	4822 126 12882	100nF +80/-20% 50V
2338	4822 124 40433	47µF 20% 25V
2339	4822 124 40433	47µF 20% 25V
2343	4822 124 41579	10µF 20% 50V

CAPACITORS

2344	4822 124 40746	0.22µF 20% 63V
2345	4822 121 51387	10nF 20% 16V
2351	4822 126 13637	10N 10% 1KV
2357	4822 124 40242	1µF 20% 63V
2359	4822 124 80563	4700µF 20% 35V
2360	4822 124 42119	4700µF 20% 25V
2361	4822 124 80563	4700µF 20% 35V
2362	5322 121 42386	100nF 5% 63V
2363	5322 121 42386	100nF 5% 63V
2364	5322 121 42386	100nF 5% 63V
2365	5322 121 42386	100nF 5% 63V
2366	4822 121 51387	10nF 20% 16V
2367	4822 124 40242	1µF 20% 63V
2368	4822 124 41525	100µF 20% 25V
2370	4822 124 80196	47µF 20% 50V
2371	4822 124 80196	47µF 20% 50V
2372	4822 124 80196	47µF 20% 50V
2373	4822 121 43526	47nF 5% 250V
2374	4822 122 33197	1nF 10% 50V
2375	4822 124 41576	2.2µF 20% 50V
2376	4822 121 43856	4.7nF 5% 250V
2377	4822 124 41576	2.2µF 20% 50V
2378	4822 124 40196	220µF 20% 16V
2379	4822 124 40433	47µF 20% 25V
2390	4822 124 40433	47µF 20% 25V

Note: Only the parts mentioned in this list are normal service parts.

12 - 1

EXPLODED VIEW - MECHANISM A AND B

1	4822 361 21574	Motor Assembly
10	4822 403 40528	Lever Eject Right
11	4822 403 40527	Lever Eject Left
	4822 691 10445	Complete Tape Mechanism CWA442RRCS

Note: Only the parts mentioned in this list are normal service parts.

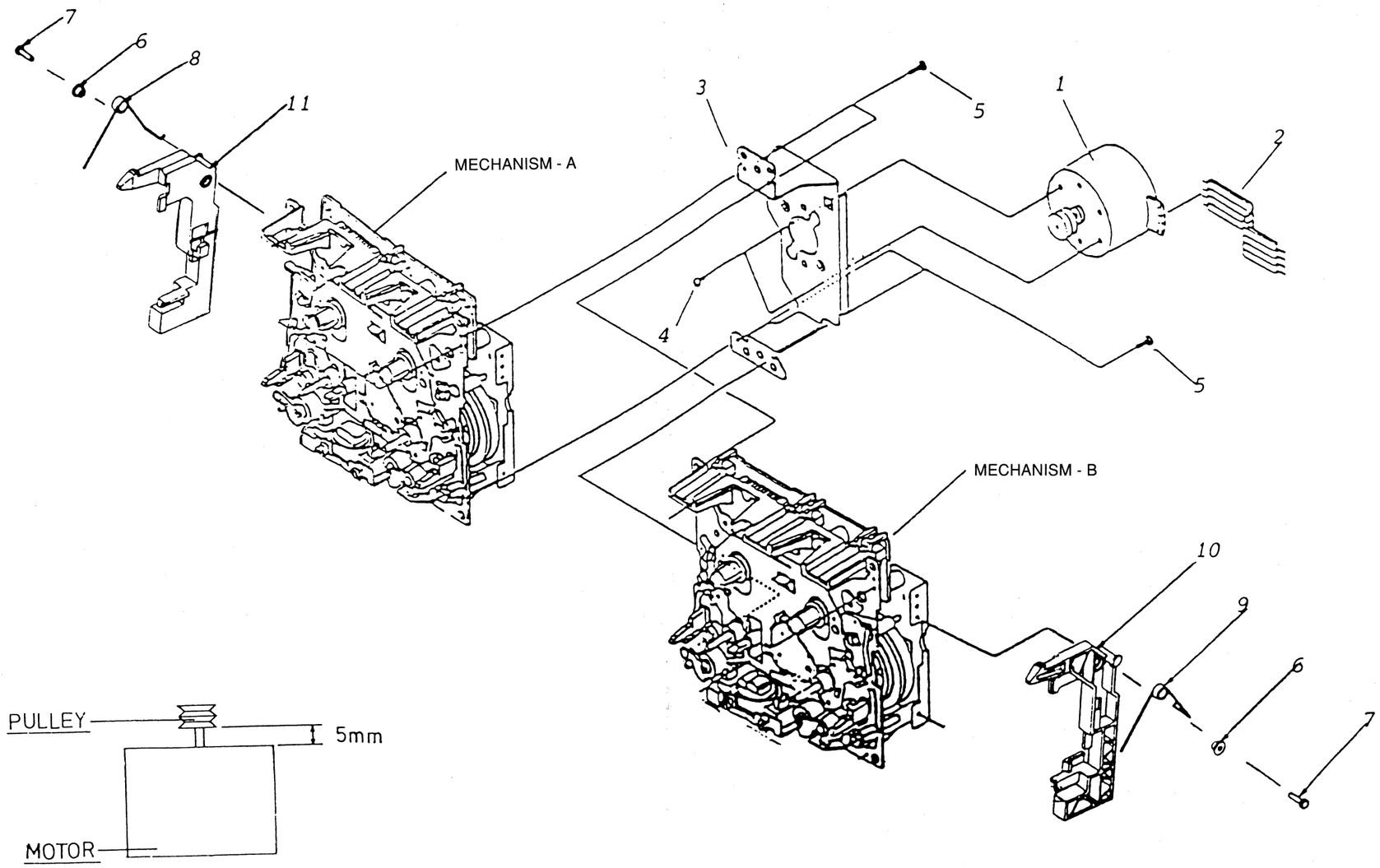

PCS 83 348

12 - 2

EXPLODED VIEW - MECHANISM A

1	4822 249 30189	Play head assy
10	4822 403 70729	Pinch Arm Assembly L
12	4822 403 70731	Pinch Arm Assembly R
18	4822 157 70155	Solenoid
22	4822 403 71213	FR Arm Assembly
24	4822 358 31219	Belt FR
31	4822 522 33524	Cam Gear
38	4822 276 13318	Switch mode
39	4822 278 90613	Switch leaf
40	4822 209 31816	Hall IC
45	4822 358 31222	Main Belt
102	4822 532 52488	Washer

Note: Only the parts mentioned in this list are normal service parts.

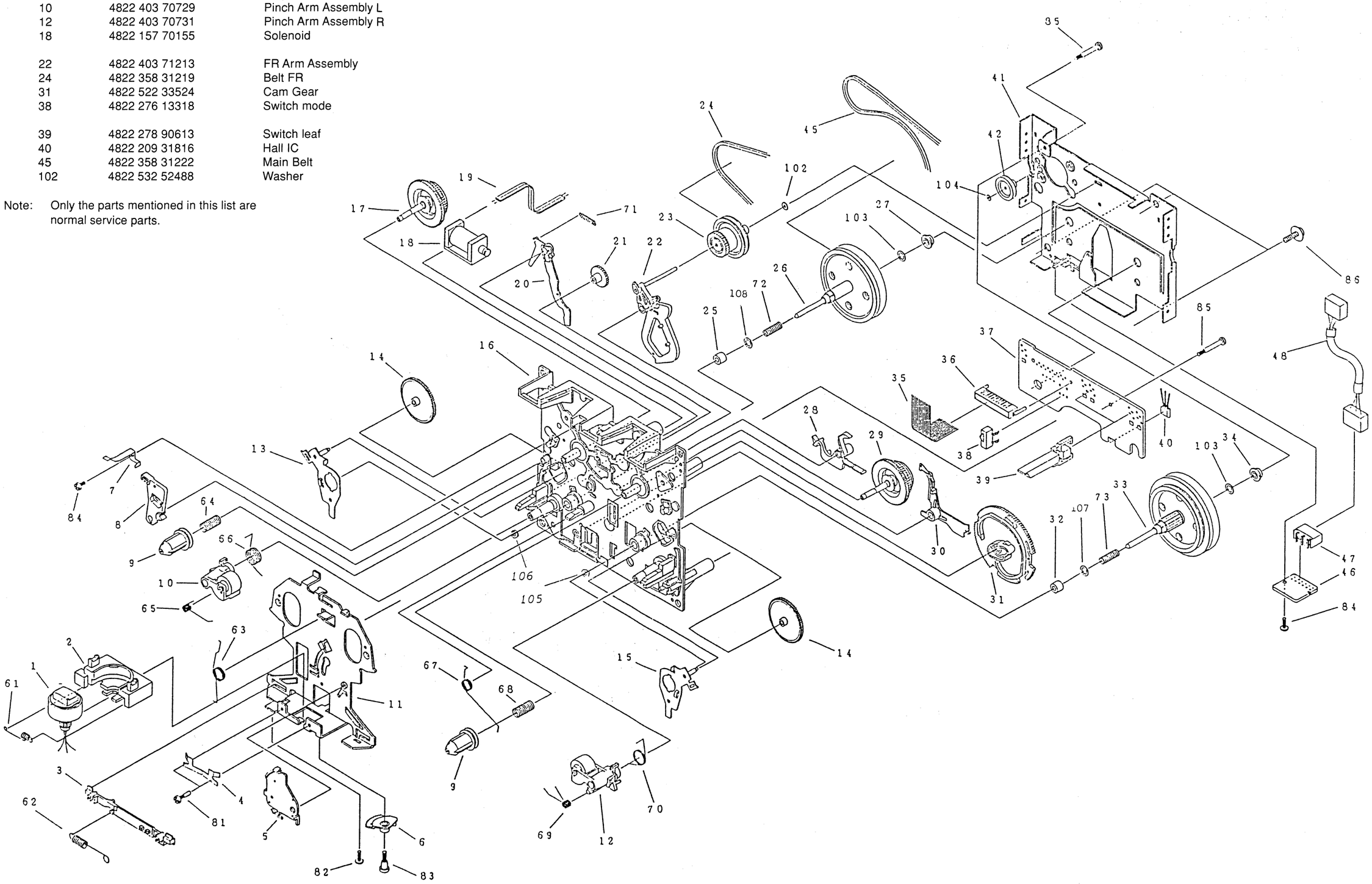

12 - 3

EXPLODED VIEW - MECHANISM B

1	4822 249 10472	Rec/Pb Head Assembly
10	4822 403 70729	Pinch Arm Assembly L
12	4822 403 70731	Pinch Arm Assembly R
18	4822 157 70155	Solenoid
22	4822 403 71213	FR Arm Assembly
24	4822 358 31219	Belt FR
31	4822 522 33524	Cam Gear
38	4822 276 13318	Switch Mode
39	4822 278 90613	Switch Leaf
40	4822 209 31816	Hall IC
45	4822 358 31221	Main Belt
102	4822 532 52488	Washer

Note: Only the parts mentioned in this list are normal service parts.

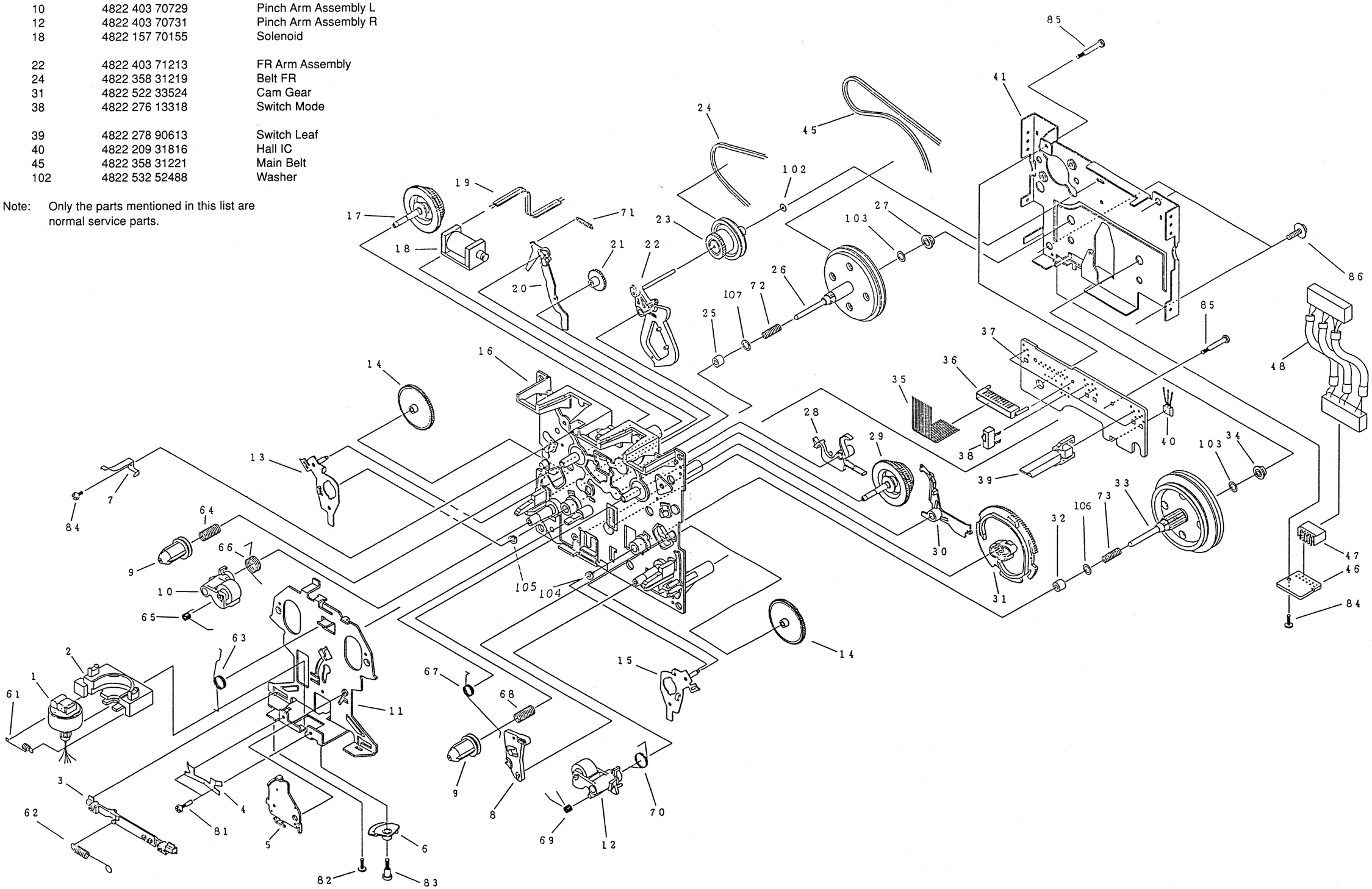

12-4

EXPLODED VIEW SET

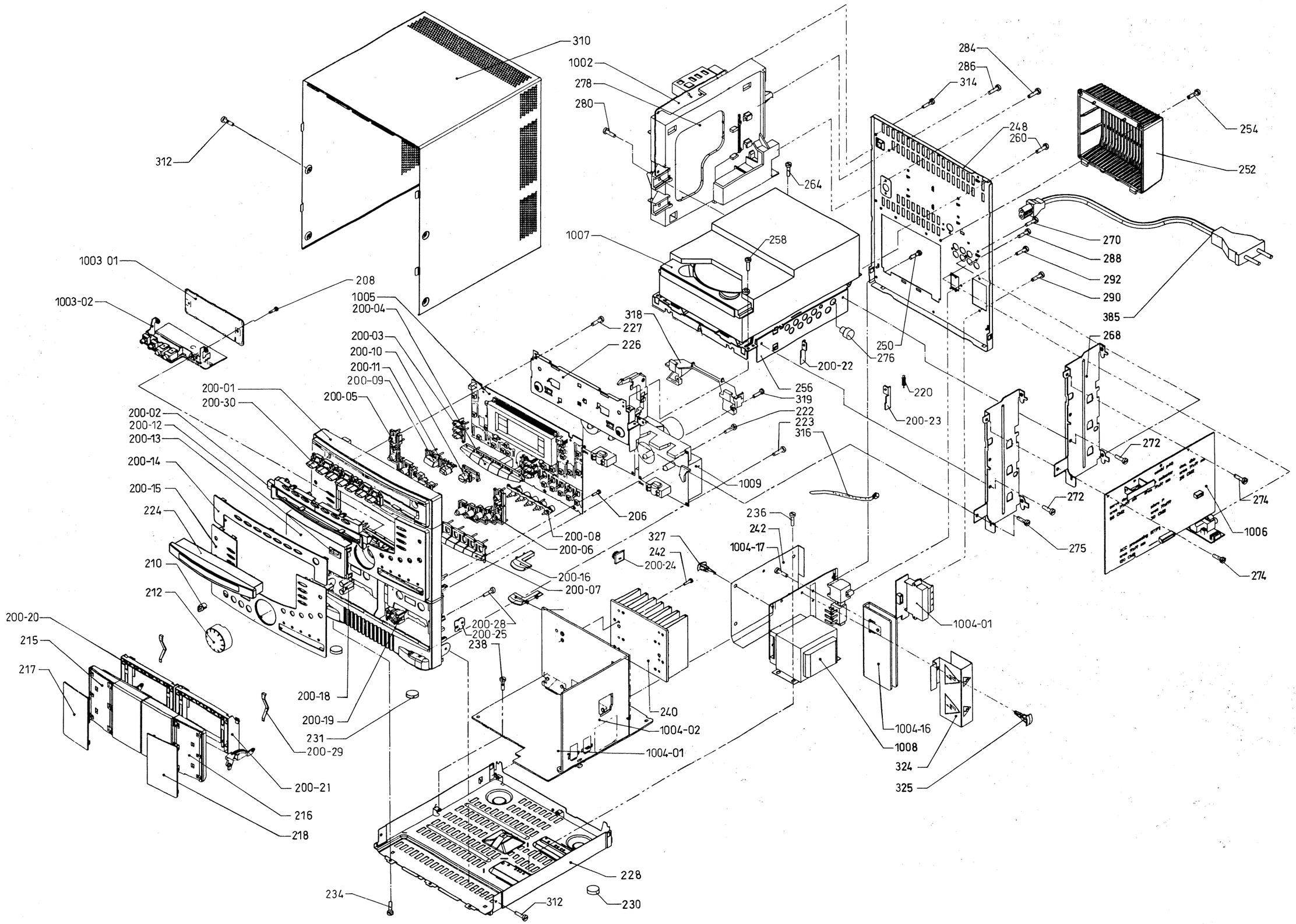

Dismantling of Speaker box

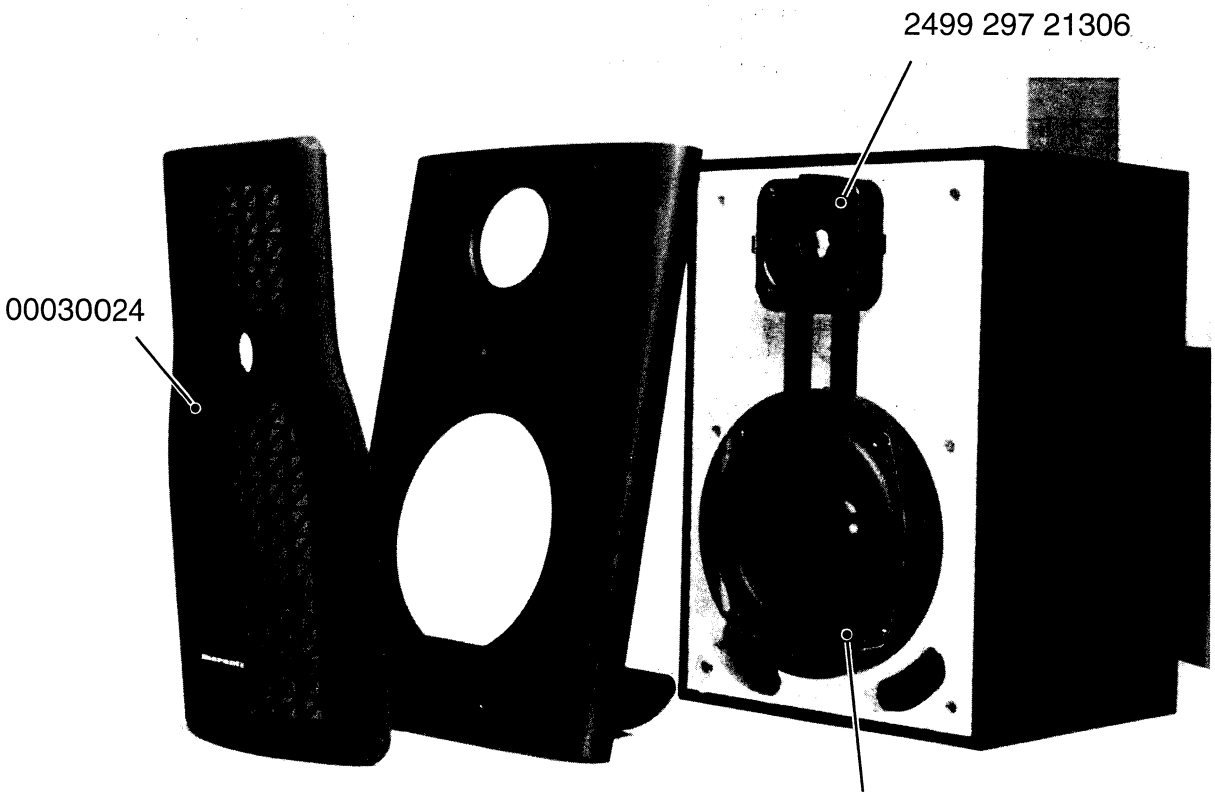

MECHANICAL PARTS - TECHNICAL SET

200	4822 426 51855	Cabinet Front Assembly /21
200	4822 426 51854	Cabinet Front Assembly /22
200-20	4822 443 64597	Door Cassette Left
200-21	4822 443 64598	Door Cassette Right
200-24	4822 529 10322	Damper Assembly
200-29	4822 492 42787	Spring Cassette
210	4822 413 31874	Knob Karaoke /21
212	4822 413 41924	Knob Volume
215	4822 443 64605	Cover Door Cassette (L)
216	4822 443 64606	Cover Door Cassette (R)
217	4822 443 64607	Cover Front Cassette (L)
218	4822 443 64608	Cover Front Cassette (R)
220	4822 492 11046	Cassette Door Spring
224	4822 443 64609	Cover Door CDC
230	4822 462 40683	Plate (Foot)
231	4822 462 40683	Plate (Foot)
252	4822 444 40835	Cover Heatsink
325	4822 466 93148	Spacer 5mm
327	4822 466 93148	Spacer 5mm

Note: Only the parts mentioned in this list are normal service parts.

MISCELLANEOUS

385	4822 321 10249	Mains Cord IEC
1008	4822 146 10359	Mains Transformer /21
1008	4822 146 21841	Mains Transformer /22
1009	4822 691 10445	Tape Mechanism CWA442RRCS
5001	4822 526 10539	Toroid Ring
5002	4822 157 53941	Coil 100µH 10%
	4822 445 10478	Loudspeaker Box (Single)
	4822 218 10612	Remote Control
	4822 303 50063	FM Aerial
	4822 303 50082	AM Frame Aerial
	4822 263 21092	Mains adaptor plug /21
	4822 736 22532	Instruction For Use

Note: Only the parts mentioned in this list are normal service parts.

SCREW LISTS:

200-28	D3 x 25
206	D3 x 10
208	D3 x 10
222	D3 x 10
223	D3 x 30
227	D3 x 10
234	M3 x 6
236	D3 x 6
238	M3 x 6
242	D2.9 x 13
250	M3 x 6
254	M3 x 10
258	M3 x 6
260	M3 x 6
264	M3 x 6
270	M3 x 6
272	M3 x 6
274	D3 x 6
275	M3 x 6
280	M3 x 6
284	D3 x 10
286	D3 x 10
288	D3 x 10
290	D3 x 10
292	D3 x 10
312	D3 x 6
314	D3 x 6
319	D2 x 5
1004-17	D2.9 x 8

LOCATION OF PRINTED CIRCUIT BOARDS