Service Manual

74 MX710/01B/07B/60B

Mini compo

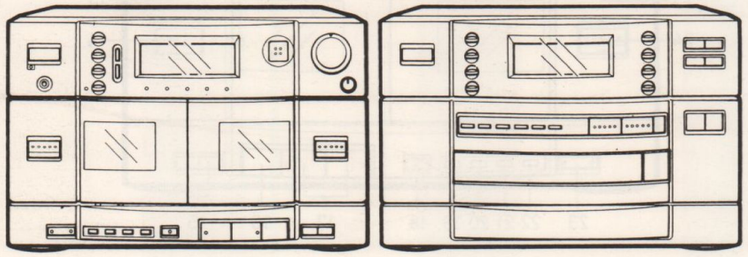

TABLE OF CONTENTS

MARANTZ DESIGN & SERVICE 1
SPECIFICATION 2
SYSTEM CONNECTION 2
CONTROLS 3
OPERATING THE RESET SWITCH 4
PARTS LIST(ACCESSORIES & REMOCON) 5

CD / TUNER UNIT
TUNER ADJUSTMENT 6
LASER BEAM SAFETY PRECAUTION 8
CD MECHANISM REMOVAL 9
CD SERVICE MODE 13
CD ADJUSTMENT 16
EXPLODED VIEW(CABINET & CHASSIS) 18
PARTS LIST 19
EXPLODED VIEW(CD MECHANISM) 22
IC BLOCK DIAGRAM 24
LCD BLOCK DIAGRAM 30
BLOCK DIAGRAM(CD MAIN) 31
SCHEMATIC DIAGRAM(FRONT) 32
SCHEMATIC DIAGRAM(CD) 34
WIRING DIAGRAM(CD) 36
SCHEMATIC DIAGRAM(TUNER) 01B 38
WIRING DIAGRAM(TUNER & FRONT) 01B 40
SCHEMATIC DIAGRAM(TUNER) 07B 42
WIRING DIAGRAM(TUNER & FRONT) 07B 44
SCHEMATIC DIAGRAM(TUNER) 60B 46
WIRING DIAGRAM(TUNER & FRONT) 60B 48
CD VOLTAGE TABLE 50
CONNECTION DIAGRAM 52

TAPE DECK / AMPLIFIER UNIT
DECK ADJUSTMENT 54
EXPLODED VIEW(CABINET & CHASSIS) 56
PARTS LIST 57
EXPLODED VIEW(TAPE MECHANISM) 64
PARTS LIST(TAPE MECHANISM) 65
IC BLOCK DIAGRAM 66
LCD BLOCK DIAGRAM 71
SCHEMATIC DIAGRAM(FRONT) 72
SCHEMATIC DIAGRAM(TAPE DECK MECHANISM) 73
SCHEMATIC DIAGRAM(TAPE DECK AMP) 01B·07B 74
WIRING DIAGRAM(TAPE DECK AMP) 01B·07B 76
SCHEMATIC DIAGRAM(TAPE DECK AMP) 60B 78
WIRING DIAGRAM(TAPE DECK AMP) 60B 80
SCHEMATIC DIAGRAM(PRE-AMP) 82
WIRING DIAGRAM(PRE-AMP) 01B 84
WIRING DIAGRAM(PRE-AMP) 07B 86
WIRING DIAGRAM(PRE-AMP) 60B 88
SCHEMATIC DIAGRAM(SYSCON & MAIN AMP) 01B 90
WIRING DIAGRAM(MAIN AMP) 01B 92
SCHEMATIC DIAGRAM(SYSCON & MAIN AMP) 07B 94
WIRING DIAGRAM(MAIN AMP) 07B 96
SCHEMATIC DIAGRAM(SYSCON & MAIN AMP) 60B 98
WIRING DIAGRAM(MAIN AMP) 60B 100
CONNECTION DIAGRAM 102

marantz®

model MX710

First issue : 1992
4822 725 51006

MARANTZ DESIGN AND SERVICE

Using superior design and selected high grade components, MARANTZ company has created the ultimate in stereo sound.
Only **original MARANTZ parts** can insure that your MARANTZ product will continue to perform to the specifications for which it is famous.

Parts for your MARANTZ equipment are generally available to our National Marantz Subsidiary or Agent.

MARANTZ INTERNATIONAL
Vestdijk 9
5600 MD Eindhoven
The Netherlands
Phone: +31/40.758290
Telefax: +31/40.75.82.99
Telex: 35000 PHTC NL routing IND NLMTFAT

ORDERING PARTS:

Parts can be ordered either by mail or by telex. In both cases, correct part number has to be specified.
The following information must be supplied to eliminate delays in processing your order:
1. Complete address
2. Complete part numbers and quantities required
3. Description of parts
4. Model number for which part is required
5. Way of shipment
6. Signature: any order form or telex must be signed otherwise such part order will be considered as null and void.

PARTS ORDERING

Parts may be ordered at the following addresses:

AUSTRIA
HORNYPHON
Vertriebsgesellschaft GmbH
Wienerbergstrasse 1
A 1101 Wien
Austria
Telex: 132.332

BELGIUM
SVD DIVISION MARANTZ
Industrialaan 1
1720 Groot-Bijgaarden
Belgium
Telex: 24466

CHILE
MARANTZ
DIVISION OF PHILIPS S.A.
AV. Santa Maria, 0760
Casilla 2687
Santiago
Telex: 240.239

DENMARK
MARANTZ
DIVISION OF PHILIPS
SERVICE A/S
Prags Boulevard 80
Postbox 1919
DK-2300 København S
Denmark
Telex: 31201

FINLAND
MARANTZ
DIVISION OF OY PHILIPS Ab
Kaivokatu 8
00100 Helsinki
Finland
Telex: 124811

FRANCE
MARANTZ FRANCE
4 Rue Bernard Palissy
92600 Asnières
France
Telex: 611651

GERMANY
MARANTZ GERMANY GmbH
Alexanderstrasse 1
2000 Hamburg
Germany

THE NETHERLANDS
Elpro Marantz
Wint Hontlaan 28
3526 KV Utrecht
The Netherlands
Telex: 4748

NORWAY
MARANTZ
DIVISION OF PHILIPS A/S
Sandstuveien 40
0680 Oslo 6
Norway
Telex: 72640

GREAT BRITAIN
MARANTZ AUDIO U.K. Ltd
Unit 15/16
Saxon Way Industrial Estate
Moor Lane
Harmondsworth UB7 OLW
Great Britain
Telex: 935196

GREECE
SHERTON ELECTRONICS S.A.
P.O.Box 21025
Hippocratus Street 188
Athens 11471
Greece
Telex: 216.795

JAPAN
MARANTZ JAPAN, Inc.
35-1, 7-chome, Sagamiono
Sagamihara-shi, Kanagawa
Japan

KUWAIT
AL ALAMIAH ELECTRONICS
Ussama Building
Fahd al Saleem Street
P.O.Box 23781
Safat-Kuwait
Telex: 22694

ITALY
MARANTZ ITALIANA S.P.A.
Via Chiese, 74
20126 Milano
Italy

SAUDI ARABIA
AL ALAMIAH ELECTRONICS
P.O.Box 5954
University Street
Riyadh 11432
Saudi Arabia
Telex: 401530

SOUTH AFRICA
MARANTZ
DIVISION OF PHILIPS S.A.
Main Road Martindale
P.O. Box. 58088
Newville 21114
South Africa

SPAIN
PHONO S.A.
Ignacio Iglesias 10
Badalona (Barcelona)
Spain
Telex: 59355

SWEDEN
MARANTZ
DIVISION OF PHILIPS
Försäljning AB
Tegeluddsvägen 1
S-115 84 Stockholm
Sweden
Telex: 14060

SWITZERLAND
MARANTZ
Technischer Service
Duenstrasse 3
3186 Düdingen
Switzerland

TURKEY
DOGRUOL Ltd.
I.M.C.
6 Blok N°6310
Unkapani
Istanbul
Turkey
Telex: 22085

MALTA
CACHIA & GALEA
Republic Street, 68D
Valetta
Telex: 1682

PORTUGAL
MARANTZ
Divisao philips S.A. service
Outurela-carnaxide
2795 LinDA-A-VELHA
Telex: 43906

All of the above locations are fully equipped to take care of your total service needs. Because various countries have differing configuration requirements, it is necessary that you contact the service facility in your particular country. In the event that there is no service location listed for your country, please, contact the nearest facility for the necessary assistance.

In case of difficulties, do not hesitate to contact the Technical Department at abovementioned address.

PCS 67 712

TECHNICAL SPECIFICATIONS

CASSETTE DECK / PRE-AMPLIFIER UNIT

Cassette decks

Track system	4-track, 2-channel stereo
Frequency response	Metal tapes : 40 - 13,500 Hz Normal tapes : 40 - 12,500 Hz
Wow and flutter	0.14 % (WRMS)
Fast forward / rewind time	Approx. 120 sec. (C-60)

Amplifier

Output power	40 W × 2 (at 8 ohms, 0.9% distortion)
Graphic equalizer	7 band electronic
Spectrum analyzer	7 band
Inputs	PHONO : 2.5 mV / 50k ohms VIDEO : 250 mV / 50k ohms
Outputs	SUPER WOOFER OUT : 600 mV SPEAKERS : 8 ohms PHONES : 8 ohms

General

Power requirements	
For model "74MX710 / 60B"	AC : 230 V, 50 Hz
For model "74MX710 / 07B"	AC : 240 V, 50 Hz
For model "74MX710 / 01B"	AC : 120 / 220 / 240 V, 50 / 60 Hz
For model "MX710"	AC : 120 / 220 / 240 V, 50 / 60 Hz
Power consumption	100 W
Dimensions(approx.)	270 (W) × 178 (H) × 317 (D) mm
Weight(approx.)	6.4 kg

CD PLAYER / TUNER / TIMER UNIT

CD player

Channels	2-channel stereo
Sampling frequency	44.1 kHz
Pick-up	Optical 3-beam semiconductor laser
Frequency response	20 - 20,000 Hz
Wow and flutter	Below measurable limits

Tuner

Reception frequency		
For model "74MX710 / 60B"	FM	87.5 - 108 MHz
	MW	522 - 1,611 kHz
	LW	144 - 290 kHz
For model "74MX710 / 07B"	FM	87.5 - 108 MHz
	AM	531 - 1,701 kHz
For model "74MX710 / 01B"	FM	87.5 - 108 MHz
	AM	531 - 1,701 kHz (9 kHz steps)
		530 - 1,700 kHz (10 kHz steps)
For model "MX710"	FM	87.5 - 108 MHz
	AM	531 - 1,701 kHz (9 kHz steps)
		530 - 1,700 kHz (10 kHz steps)

General

Dimensions(approx.)	270 (W) × 178 (H) × 278 (D) mm
Weight(approx.)	2.9 kg

Specification subject to change without notice.

SYSTEM CONNECTIONS

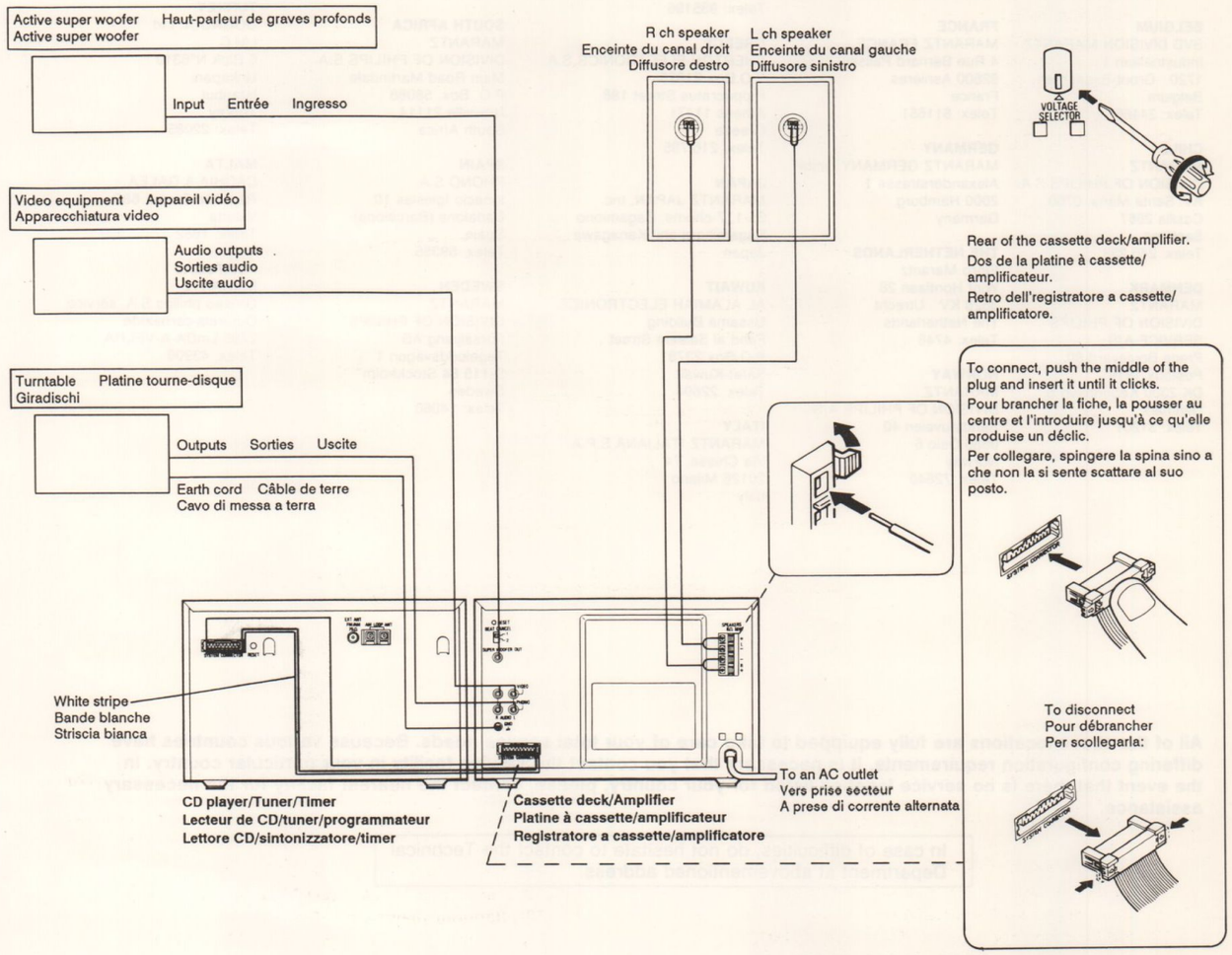

CONTROLS

CASSETTE DECK / AMPLIFIER UNIT

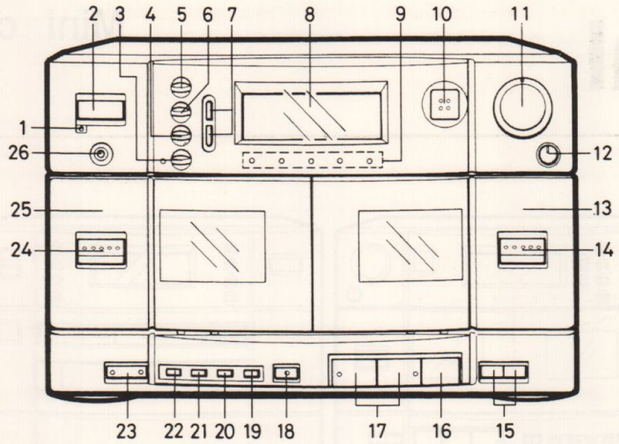

1. Standby indicator (STANDBY)
2. Power switch (POWER)
3. Bass expander switch and indicator (BASS EQ)
4. Display switch (DISPLAY)
5. Preset sound mode switch (PRESET)
6. Frequency / Memory switch (FREQ. / MEMO)
7. Equalizer up / down switches (+ EQ -)
8. Display
9. Function Indicators (CD / TAPE / TUNER / PHONO / VIDEO)
10. Function switch (FUNCTION)
11. Volume control (VOLUME)
12. Balance control (BALANCE)
13. Deck B cassette holder
14. Deck B eject button (EJECT)
15. Fast wind switches [◀◀ (REW) / (F.FWD) ▶▶]
16. Stop switch (□ STOP)
17. Play switches and indicators (◁ PLAY / PLAY ▷)
18. Record / Record pause switch and indicator (REC / PAUSE)
19. Record muting switch (REC MUTE)
20. High-speed dubbing switch (H.DUBBING)
21. Dolby noise reduction switch (DD NR)
22. Reverse mode switch (R. MODE)
23. Deck select switch and indicator (DECK A / B)
24. Deck A eject button (EJECT)
25. Deck A cassette holder
26. Headphones socket (PHONES)

CD PLAYER / TUNER / TIMER UNIT

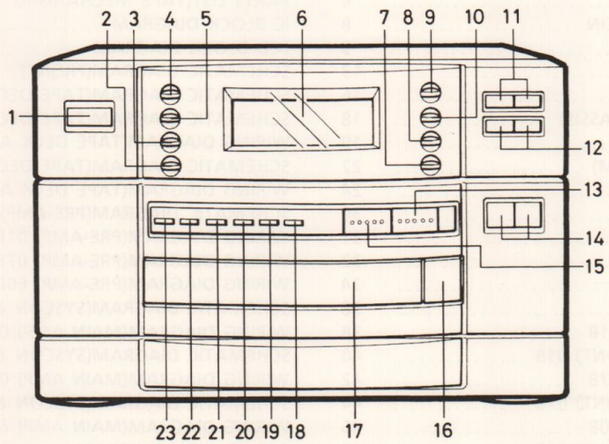

1. Remote sensor (IR SENSOR)
2. Clock switch (CLOCK)
3. Sleep timer switch (SLEEP)
4. ON / OFF timer switch (TIMER)
5. Wake-up timer switch (WAKE UP)
6. Display
7. Memory switch (MEMO)
8. Set / Clear switch (SET / CLEAR)
9. Band select switch (BAND)
10. FM / Tuning mode switch (FM / TUNING MODE)
11. Tuning switches (▼ DOWN TUNING UP ▲)
12. Preset / Automatic preset tuning switches (▼ DOWN PRESET UP ▲)
13. Play / Pause switch (▶ / ❚❚ PLAY / PAUSE)
14. Skip / Search, switches(⏮ / ⏮ SKIP / SEARCH ⏭ / ⏭)
15. Stop / Clear switch (■ STOP)
16. Disc tray open / close switch and (▲ OPEN / CLOSE)
17. Disc tray
18. Repeat play switch (REPEAT)
19. CD memory switch (CD MEMO)
20. Random play switch (RANDOM)
21. Computer recording switch (COMP. REC)
22. Time / Fade-out switch (TIME FADE)
23. Edit switch (EDIT)

CONTROLS

REMOTE CONTROLLER UNIT

1. Power switch (POWER)
2. Deck controls
   ○ : Record muting switch
   ● / ❚❚ : Record / Record pause switch
   DECK A / B : Deck select switch
   ◀ ▶ : Play switches
   ■ : Stop switch
   ◀◀ ▶▶ : Fast wind switches
3. CD player controls
   MEMO : CD Memory switch
   REPEAT : Repeat play switch
   ▶ / ❚❚ : Play / Pause switch
   ■ : Stop / Clear switch
   ⏮ / ◀◀ ▶▶ / ⏭ : Skip / Search switches
4. Sleep timer switch (SLEEP)
5. Tuner controls
   PRESET : Preset tuning switch
   TUNER / BAND : Tuner function / Band select switch
6. Function controls
   VIDEO : Video function switch
   PHONO : Phono function switch
   CD : CD function switch
7. Audio muting switch (MUTE)
8. Volume controls (▼ VOL ▲)

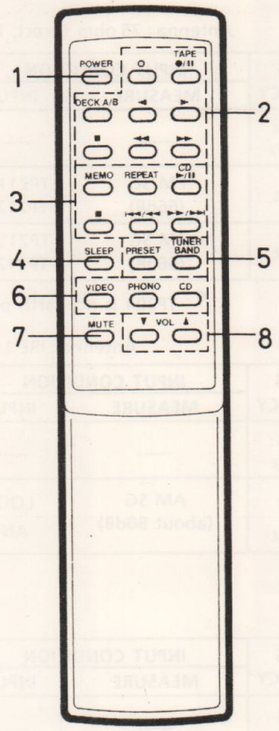

OPERATING THE RESET SWITCH

This CD / TUNER and TAPE DECK / AMPLIFIER unit is provided with a reset switch on the rear panel. The reset switch serves to initialize the microprocessor in the each units which controls the CD, TUNER, TAPE DECK and etc block. If the unit is to be serviced or key input is not acknowledged even when the CD / TUNER, TAPE DECK and etc. operation buttons are pressed, press the RESET switch and initialize the microprocessor following the step below.

1). Disconnect the AC power cord from the power outlet.
2). Keep the RESET switch depressed for 60 seconds.
   (The backed up electrolytic capacitor is discharged by keeping the RESET switch depress.)
3). Reconnect the AC power cord to the power outlet.
4). Press the CD / TUNER, TAPE DECK and etc. operations, and check their operation.

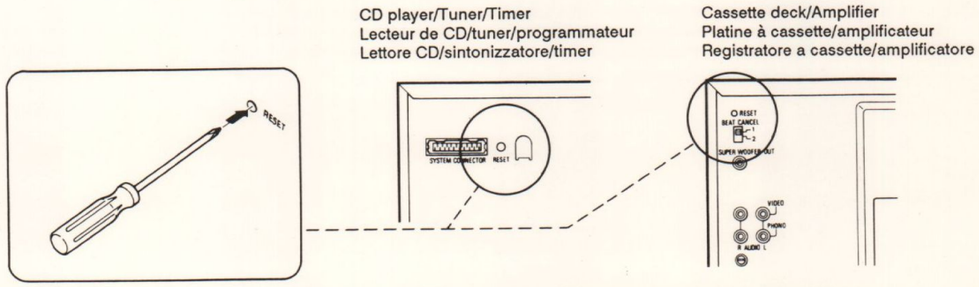

PARTS LIST (ACCESSORIES, REMOCON & SPEAKER)

PRODUCT SAFETY NOTICE

Each precaution in this manual should be followed during servicing. Components identified with the IEC symbol ⚠ in the parts list and the schematic diagram designate components in which safety can be of special significance. When replacing a component identified ⚠, use only the replacement parts designated, or parts with the same ratings of resistance, wattage or voltage that are designated in the parts list in this manual. Leakage-current or resistance measurements must be made to determine that exposed parts are acceptably insulated from the supply circuit before returning the product to the customer.

CAUTION: Regular type resistors and capacitors are not listed. To know those values, refer to the schematic diagram.

ACCESSORIES

Ref. No.	Part No.	Description
	4822 736 21617	INSTRUCTION MANUAL,MADE IN SINGAPORE
or	4822 736 21617	INSTRUCTION MANUAL,MADE IN MALAYSIA
	4822 303 50069	LOOP ANTENNA,AM
	4822 526 10585	ANTENNA,FM /01B·/07B
	4822 303 50062	ANTENNA,FM /60B
or	4822 303 50071	ANTENNA,FM /60B
	4822 267 31608	ASSY,CONNECTOR-P,19P,CD/TU TO DE/AMP
	4822 502 30673	SCR WOOD RND 3.1X13, AM ANT

REMOTE CONTROLLER UNIT

REMOCON (RC710MX)

Ref. No.	Part No.	Description
	4822 218 10493	REMOTE CONTROLLER

TUNER / CD PLAYER UNIT

ADJUSTMENT (TUNER) — FOR 01B · 07B

- Use a plastic screwdriver for adjustment.
- Adjust the intermediate frequency of AM and FM to the frequency of ceramic filter.
- AM CHANNEL STEP switch for GENERAL is set up to 9kHz.

SG RF Level : 75 ohm Open voltage dBμV

1. FM BAND

Antenna : 75 ohm Direct, Modulation : 1kHz, Dev. : ±75kHz (mono) · ±40kHz (main) · ±6.75kHz(pilot)

STEP	ITEMS	TUNING FREQUENCY	INPUT CONDITION		OUTPUT CONDITION		PARTS	STANDARDS
			MEASURE	INPUT	MEASURE	OUTPUT		
1	IF	10.7MHz	FM Sweep Generator	TP211(H) TP212(E)	FM Sweep Generator	TP223(H) TP224(E)	T2201	V CURVE Wave : suitable
2	COVER	87.9MHz 107.9MHz	------	------	Digital Voltmeter	TP202(H) TP201(E)	L2104 ------	1.0~1.3V Confirm ≦8.5V (about 6.6V)
3	TRACKING	90.1MHz 106.1MHz	FM SG (about 8dB)	TP211(H) TP212(E)	VTVM Oscilloscope	TP233(L) TP234(R) TP235(E)	L2102 L2103 CT201	Output : Maximum Adjust to near the I.H.F sensitivity
4	IF(0V)	98.1MHz	FM SG (66dB)	TP211(H) TP212(E)	Digital Voltmeter	TP203(H) #TP204(E)	T2202	0±0.05V
5	VCO	98.1MHz	FM SG (66dB)	TP211(H) TP212(E)	Frequency Counter	TP206(H) TP207(E)	SVR23	##19KHz±50Hz
6	SEPARATION	98.1MHz	FM SG (about 66dB)	TP211(H) TP212(E)	VTVM Oscilloscope	TP233(L) TP234(R) TP235(E)	------	Confirm to near the specification
7	STEREO SENSITIVITY	98.1MHz	FM SG Set to EXT(STEREO)	TP211(H) TP212(E)	------	------	------	Confirm stereo indicator light up within near the specification

: TP204 is no earth point. ## : Adjust in the modulation off Tuner Mode : AUTO STEREO

2. AM BAND

Antenna : IRE Loop, Modulation : 1kHz 30% SG RF Level : 75 ohm Open voltage dBμV

STEP	ITEMS	TUNING FREQUENCY	INPUT CONDITION		OUTPUT CONDITION		PARTS	STANDARDS
			MEASURE	INPUT	MEASURE	OUTPUT		
1	COVER	531kHz 1701kHz	------	------	Digital Voltmeter	TP202(H) TP201(E)	------ ------	Confirm 1.1~1.5V Confirm ≦8.5V (about 7.7V)
2	TRACKING	603kHz 1404kHz	AM SG (about 80dB)	LOOP ANT	VTVM Oscilloscope	TP233(L) TP234(R) TP235(E)	------ ------	Output : Maximum Confirm to near the effective sensitivity.
3	SD	999kHz	AM SG (about 80dB)	LOOP ANT	------	------	------	Confirm auto tuning stops at within near the specification

SD : Station Detection

3. PARTS LOCATION

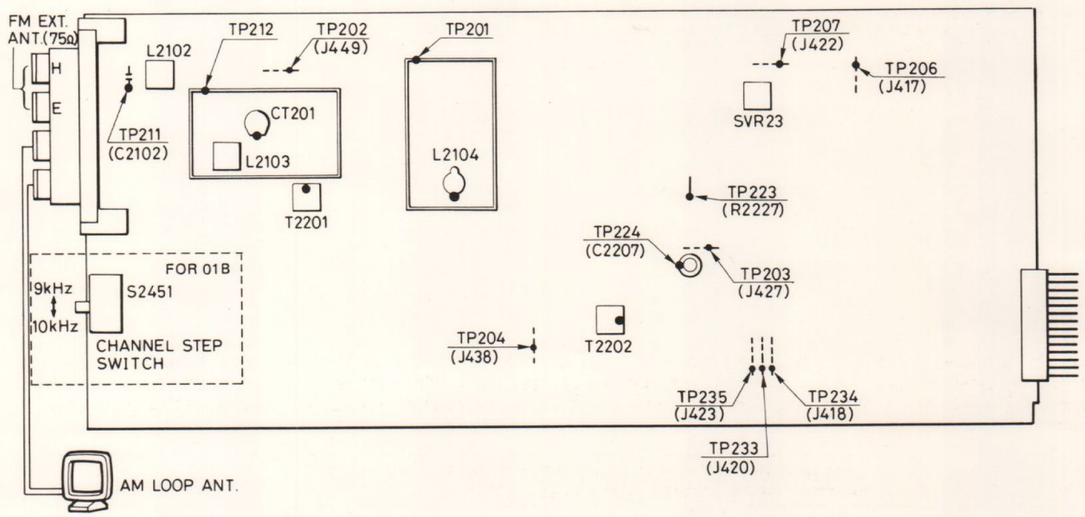

ADJUSTMENT (TUNER) — FOR 60B

- Use a plastic screwdriver for adjustment.
- Adjust the intermediate frequency of AM and FM to the frequency of ceramic filter.

SG RF Level : 75 ohm Open voltage dBμV

1. FM BAND

Antenna : 75 ohm Direct, Modulation : 1kHz, Dev. : ±75kHz (mono) · ±40kHz (main) · ±6.75kHz(pilot)

STEP	ITEMS	TUNING FREQUENCY	INPUT CONDITION		OUTPUT CONDITION		PARTS	STANDARDS
			MEASURE	INPUT	MEASURE	OUTPUT		
1	COVER	87.5MHz 108.0MHz	------	------	Digital Voltmeter	TP202(H) TP201(E)	------ ------	Confirm 1.4~1.6V Confirm ≦8.5V (about
2	IF(0V)	98.0MHz	FM SG (66dB)	TP211(H) TP212(E)	Digital Voltmeter	TP203(H) #TP204(E)	T2202	0±0.05V
3	VCO	98.0MHz	FM SG (66dB)	TP211(H) TP212(E)	Frequency Counter	TP206(H) TP207(E)	SVR23	##19KHz±50Hz

: TP204 is no earth point. ## : Adjust in the modulation off Tuner Mode : AUTO STEREO

2. MW BAND

Antenna : IRE Loop, Modulation : 1kHz 30% SG RF Level : 75 ohm Open voltage dBμV

STEP	ITEMS	TUNING FREQUENCY	INPUT CONDITION		OUTPUT CONDITION		PARTS	STANDARDS
			MEASURE	INPUT	MEASURE	OUTPUT		
1	COVER	522kHz 1611kHz	------	------	Digital Voltmeter	TP202(H) TP201(E)	L2153 ------	Confirm 1.0~1.4V Confirm ≦8.5V (about
2	TRACKING	603kHz 1404kHz	AM SG (about 80dB)	LOOP ANT	VTVM Oscilloscope	TP233(L) TP234(R) TP235(E)	L2152 CT252	Output : Maximum Confirm to near the effective sensitivity.

3. LW BAND

STEP	ITEMS	TUNING FREQUENCY	INPUT CONDITION		OUTPUT CONDITION		PARTS	STANDARDS
			MEASURE	INPUT	MEASURE	OUTPUT		
1	COVER	144kHz 290kHz	------	------	Digital Voltmeter	TP202(H) TP201(E)	L2154 ------	Confirm 1.3~1.8V Confirm ≦8.5V (about
2	TRACKING	162kHz 279kHz	AM SG (about 80dB)	LOOP ANT	VTVM Oscilloscope	TP233(L) TP234(R) TP235(E)	L2151 CT251	Output : Maximum Confirm to near the effective sensitivity.

4. PARTS LOCATION

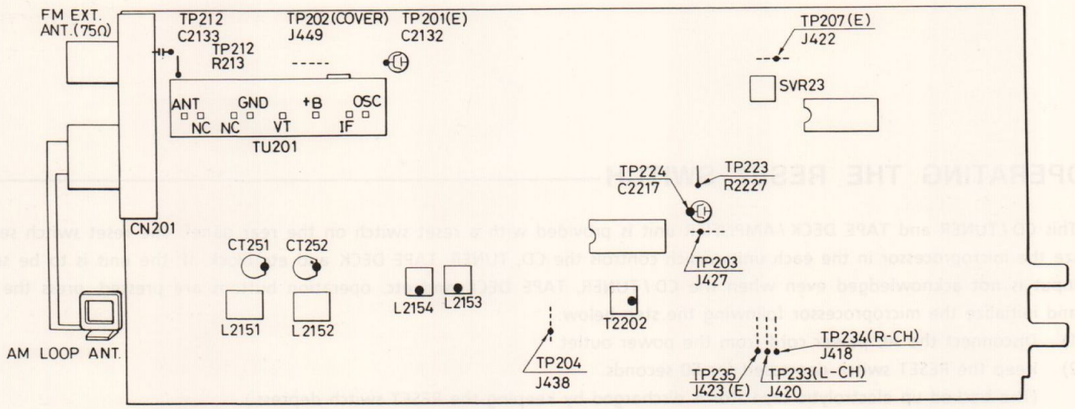

LASER BEAM SAFETY PRECAUTIONS (CD)

Do not look straight at the laser beam from the pickup and do not point the beam at your fingers or any other part of your body.
Note: The laser beam must never be allowed to enter the eyes since this may damage the eyes.
Power must never be supplied to a pickup with a damaged laser output part (objective lens, etc.).

Structural Safety Interlock
This model has a disc chuck lever and top lid. This disc chuck lever and top lid prevent to expose the laser beam for users.

INVISIBLE LASER RADIATION EXPOSURE TO BEAM IS DANGEROUS CLASS 1 LASER PRODUCT
OUTPUT POWER : 0.6 mW MAX WAVELENGTH : 790 nm

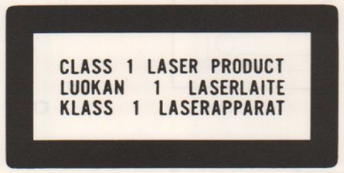

BEFORE REPAIRING THE COMPACT DISC PLAYER PARTS

Many semiconductors (ICs and transistors) and a pickup (with a built-in laser diode) for reading the music signals on compact discs by means of a laser beam are used as the parts in the compact disc player unit.

1) Precautions for handling the pickup and semiconductors (particularly the ICs)

① The pickup and semiconductors (particularly the ICs) may be damaged if they come into contact with a source of high voltage static electricity. Do not bring them, therefore, into contact with or into the vicinity of anything which has been charged with high voltage static.

② The pickup consists of a large number of optical and precision parts. Do not store or repair it, therefore, in any location with a high temperature, high humidity, high magnetic fields or high dust concentration. (Since the pickup contains a powerful magnet, it must not be brought near any magnetized objects.)

③ Do not apply strong external pressure to the pickup or subject it to impact. Actions like these can cause the printed circuit board to crack or malfunctioning to occur.

④ Do not use a pickup which has been subjected to strong external pressure or to an impact. The performance of such a pickup may deteriorate gradually and cause malfunctioning.

⑤ The pickup is a single integrated part which has been very precisely adjusted. Therefore, its adjustment points and set screws must not be touched.

2) How to prevent static during handling

① When replacing any of the parts, disconnect the power plug from the unit being repaired.

② All measuring instruments, tools and repair equipment must be grounded. Cover the work bench where the repair work will be done with a grounded electrically conductive sheet.

③ Ground the metal part of the soldering iron in order to safeguard against leakage of electricity from the heater.

④ Repair personnel must wear grounding bands around their wrists to discharge static picked up by their bodies. These bands are grounded through a resistor (with a 1M ohms resistance).

Note: Under no circumstances must be the grounding bands be grounded without a resistor (with a 1M ohms resistance) since doing so involves the risk of electric shocks.
Since static in the clothes of the repair personnel will not be discharged by wearing grounding bands, every care must be taken not to allow the clothes to touch the pickup and semiconductors (particularly the ICs).

⑤ The pickup, which is a single integrated part, is kept in a conductive bag. Use this bag to convey the pickup from one place to another. In order to avoid damage resulting from static which may occur when the pickup is removed from the bag, make sure that it is not placed on top of the bag.

3) Precautions with laser beam

① Do not look straight at the laser beam from the pickup and do not point the beam at your fingers or any other part of your body.
Note: The laser beam must never be allowed to enter the eyes since this may damage the eyes.

② Power must never be supplied to a pickup with a damaged laser output part (objective lens, etc.).

4) Cleaning the lens surface

① Blow off dust on the lens using the kind of air brush which is used for cameras.

② Remove stubborn dirt with a cotton swab dipped in isopropyl alcohol. Do not use any other type of cleaning fluid since it may mark the plastic lens.
Notes:
① Do not use too much isopropyl alcohol: the excess may seep inside the pickup.
② The lens is held in place by a very feeble support spring. Therefore, when cleaning the lens, avoid applying any more force by the cotton swab than is necessary since this may bend the support spring out of shape.

CD MECHANISM REMOVAL

1). Preparations

① Do not apply unnecessary force to the pickup when handling it. Care should be taken not even to touch the lens or drive circuit sections.
② Do not apply unnecessary force (do not pull or push it forcefully) to remove the disc tray from its inside position. Unnecessary force may break the teeth on the tray gear (CM6).
③ In the descriptions which follow, the numbers in the parentheses after the parts are reference numbers in the exploded views. Refer to these views.

2). Removing and installing the disc tray

① Remove the stop screw (CTY1) of the disc tray (CT21). (①)
② Pull the disc tray (CT21) all the way forward by turning the tray drive gear (CM12) clockwise. (②)
Note: Do not take hold of the disc tray (CT21) and pull it out by force.
③ Push the catch on the disc tray (CT21) in the direction shown by the arrow, and draw out the disc tray (CT21). (③)
④ To install the disc tray, turn the gear (CM12) in the direction of the arrow as far as it will go. (②)
⑤ Align the disc tray (CT21) with the mechanism chassis (CM39). Adjusting second tooth of the tray move gear (CM3). (④)
⑥ Push the disc tray (CT21) toward the rear, and interlock it with the tray drive gear (CM12) as shown in Fig. ④.
⑦ Secure it with the screw (CTY1) which was removed in step ①.

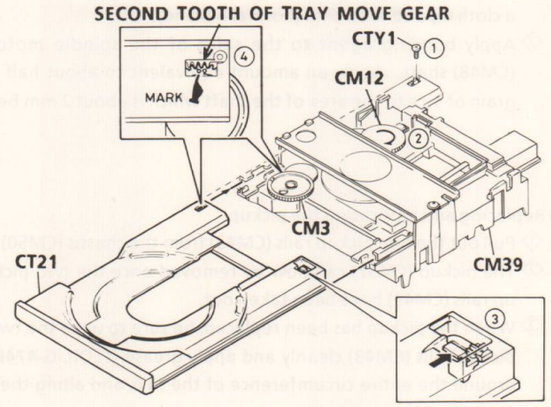

3). Disassembling the mechanism

(1) Removing the pickup block
① Remove the disc tray (CT21). (Refer to steps ①, ② and ③ of the section entitled "Removing and installing the disc tray.")
② Turn the tray drive gear (CM12) counterclockwise (①), and move the pickup in the direction of arrow (②) as far as it will go.
③ Remove the spring wire (CM44) with tweezers. (③)
④ Remove the screw (CM11), and also remove the tray drive gear (CT12) and washer (CM13). (④)
⑤ Now remove the pick rack gears (CM16 and CM19).
Note: It will not be possible to remove the pick rack gears (CM16 and CM19) unless the pickup has been moved all the way in the direction of arrow (②).
⑥ The pickup block can now be removed by taking out the screw (CM51) and spring coil (CM49).
Note: If the timing gear (CM23) is in the state shown by "X" in the figure on the right, put it in the state shown by "O."

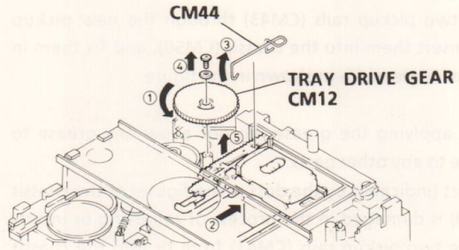

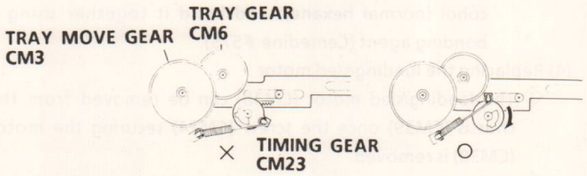

(2) Replacing the turntable and spindle motor
- First, have the new turntable (CM45) and special washer (CM47) ready.
Note: The turntable (CM45) and special washer (CM47) which have been removed cannot be reused because the heat from the soldering iron has deformed them.
- Have calipers with a dial ready.

① Apply heat for about a minute to the shaft of the spindle motor (CM48) underneath the turntable (CM45) using the soldering iron (at 60W). This will melt the bonding agent which bonds the spindle motor (CM48) shaft and turntable (CM45) together.
② Take off the turntable (CM45) from the spindle motor (CM48) shaft by gradually applying force in the upward direction at the center of the bottom surface of the turntable (CM45).
③ The spindle motor (CM48) can now be removed from the sub chassis (CM50) by removing the two screws (CM46) which secure the spindle motor (CM48).

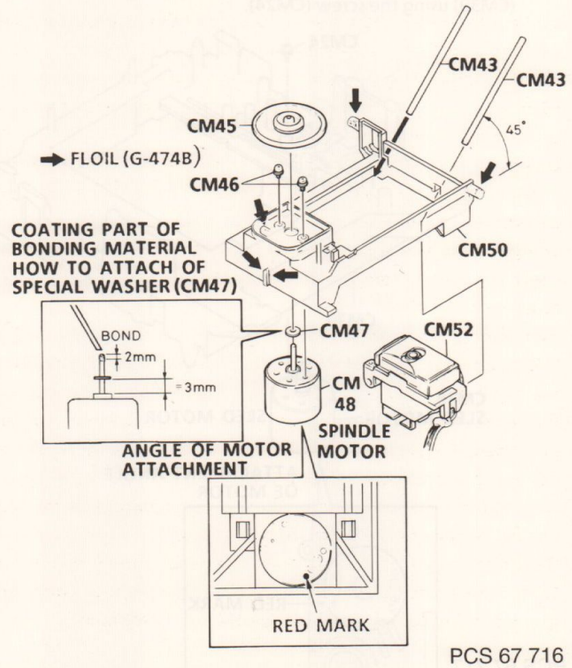

④ When replacing the spindle motor (CM48), mount the new spindle motor onto the chassis (CM50) using the two screws (CM46) at the angle shown in the figure.

⑤ Insert the new special washer (CM47) into the shaft of the spindle motor (CM48) as shown in the figure.

⑥ Wipe the shaft (across an area extending from the end to 10 mm or more from the end) of the spindle motor (CM48) with a cloth dipped in alcohol (normal hexane).

⑦ Apply bonding agent to the sides of the spindle motor (CM48) shaft. Apply an amount equivalent to about half a grain of rice to the area of the shaft which is about 2 mm below its end. For the bonding agent, mix equal amounts of "Three Bond 2001" and "Three Bond 2105F."

⑧ Insert the new turntable (CM45) over the spindle motor (CM48) shaft, as shown in the figure, to mount.

⑨ Press down gently on the turntable (CM45) which has been mounted, align it with the mounting dimensions and fix it in place.

⑩ Check that the bonding agent does not ooze out (particularly at the top center area of the turntable (CM45)). If any agent is oozing out, wipe it away with a cloth dipped in alcohol (normal hexane).

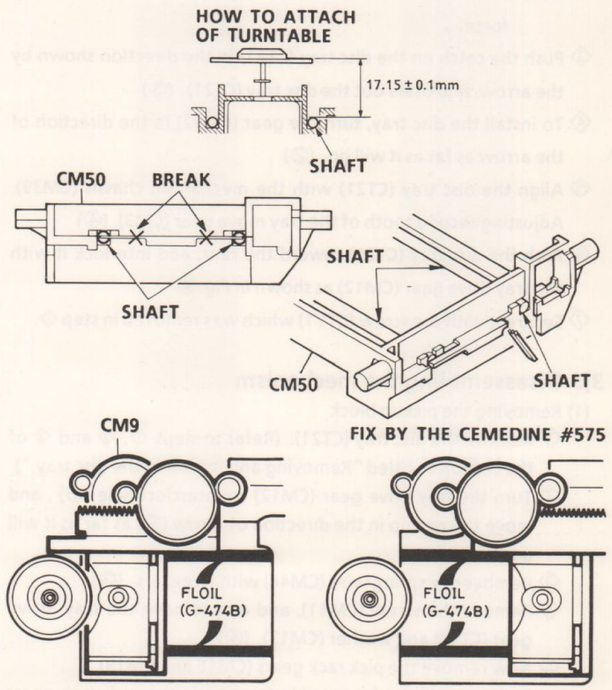

(3) Replacing and lubricating the pickup

① Pull out the two pickup rails (CM43) from the chassis (CM50).

② The pickup (CM52) can now be removed once the two pickup rails (CM43) have been taken out.

③ When the pickup has been replaced, be sure to wipe the two pickup rails (CM43) cleanly and apply grease (FLOIL G-474B) around the entire circumference of the rails and along their entire length.

④ Pass the two pickup rails (CM43) through the new pickup (CM52), insert them into the chassis (CM50), and fix them in place at an angle of 45- as shown in the figure.

Notes:

① When applying the grease, do not allow any grease to adhere to any other parts.

② If a part (indicated by the dots in the figure) of the chassis (CM50) is damaged in the process of removing or inserting the two pickup rails (CM43) from or into the chassis (CM50), wipe the damaged area with a cloth dipped in alcohol (normal hexane), and bond it together using a bonding agent (Cemedine #575).

(4) Replacing the loading/sled motor

① The loading/sled motor (CM38) can be removed from the chassis (CM39) once the screw (CM24) securing the motor (CM38) is removed.

② Mount the new loading/sled motor (CM38) onto the chassis (CM39) using the screw (CM24).

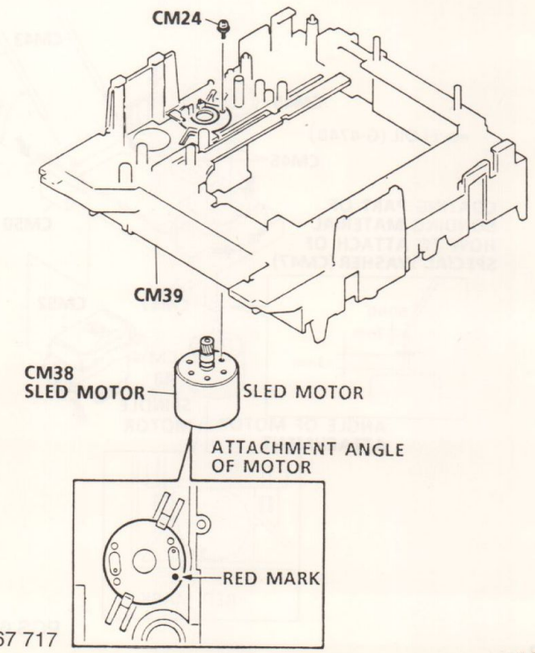

(5) Checking the loading/sled motor's operation

① As shown in the figure, connect an ammeter and a DC power supply to the loading/sled motor (CM38), and set the tray open and end switches to the "off" positions.

② Check that the pickup (CM52) moves smoothly without stopping from the inner circumference of the compact disc toward its outer circumference when a DC 0.6V voltage is applied from the DC power supply.

③ The disc tray is housed inside and the gear (CM9) slips when a DC 4V voltage is applied from the DC power supply. Check that the ammeter indicates 120mA or more at this time.

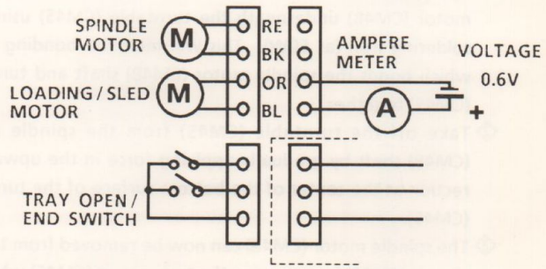

4). Checkpoints for CD mechanism assembly and lubrication

(1) Lubricating and mounting the tray slide

① Apply grease (FLOIL G-474B) to the area indicated by the diagonal in the figure.

② When inserting the tray slide (CM15), set the position where it is installed vis-a-vis the base/tray timing gear (CM20) as shown in the figure.

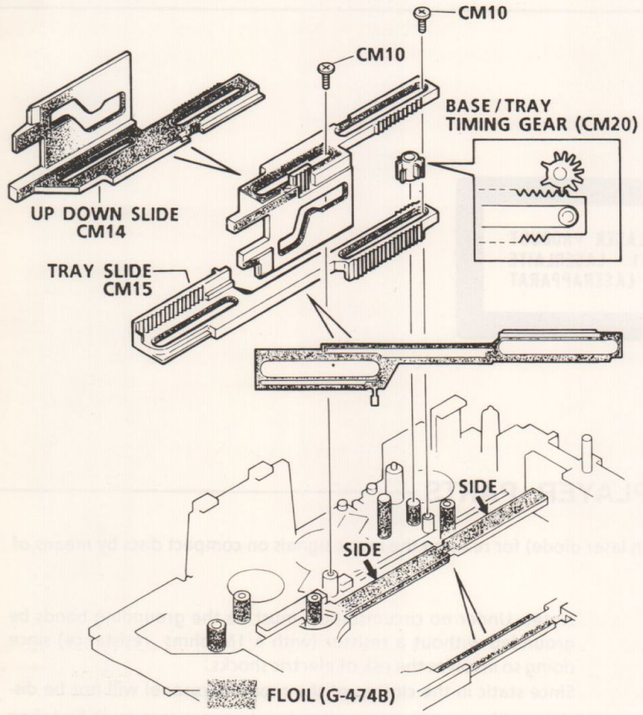

(2) Installing the tray gear

① Move the tray slide (CM15) in the direction of the arrow (1).

② Engage the gear section of the tray slide (CM15) with the inner gear of the tray gear (CM6) at the center line, as shown in the figure.

③ Align the tray move gear (CM3) with the position (○) of the hole in the outer gear of the tray gear (CM6), and engage the tray move gear (CM3), as shown in the figure.

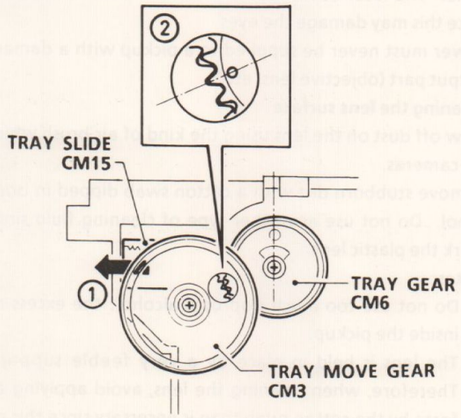

(3) Installing the base up/down slide and timing gear

① Move the base up/down slide (CM14) in the direction of the arrow (1), and set the gears at the positions shown in the figure.

② Insert the timing gear (CM23), and mount it using the screw (CM21).

③ Turn the timing gear (CM23) counterclockwise.

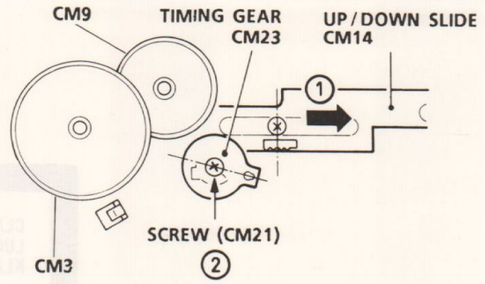

④ Hook the gear tension spring (CM22) onto the timing gear (CM23).

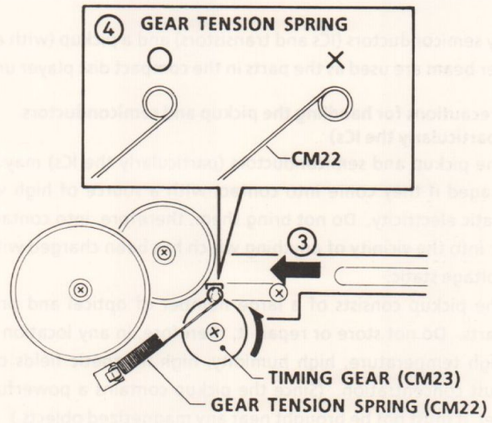

CD MECHANISM REMOVAL

(4) Lubricating the base lever

① Apply grease (FLOIL G-474B) to the area indicated by the diagonal in the figure.

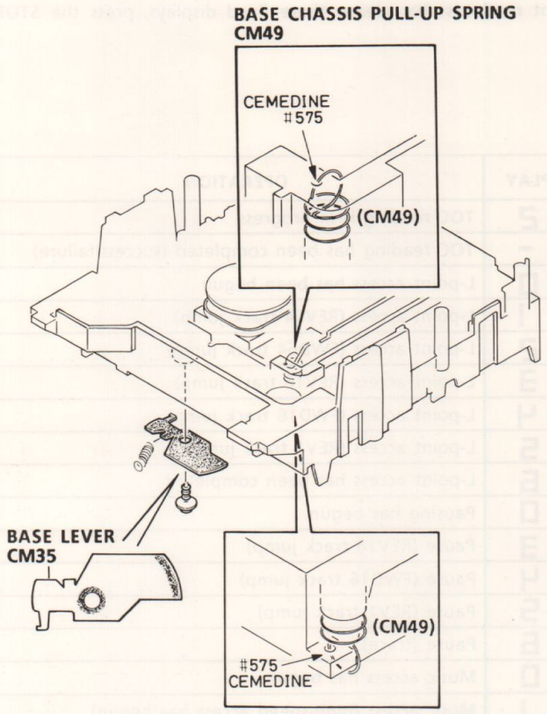

(5) Lubricating the pickup sled gear and clutch gear

① Apply grease (FLOIL G-474B) around the entire circumference of the lower gear of the pickup sled gear (CM12), as shown in the figure (area indicated by the diagonal).

② Apply grease (G-333) around the entire circumference of the outer clutch gear (CM9).

③ Apply grease (FLOIL G-474B) to the area indicated by the diagonal part of the outer clutch gear (CM9) where it makes contact with the inner clutch gear (CM8).

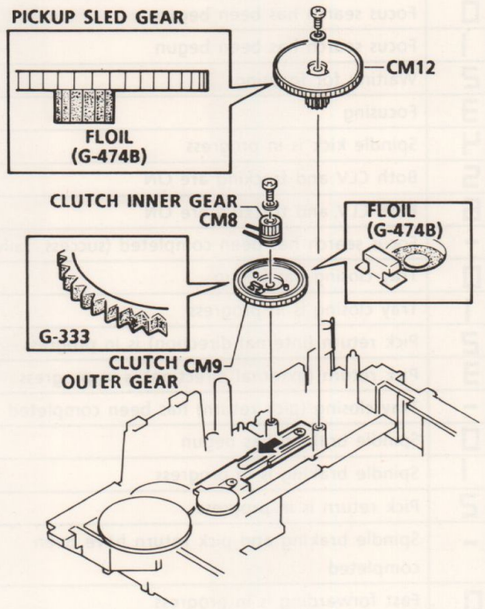

(6) Arranging and securing the leads

① As shown in the figure, set the pickup (CM52) at a position on the innermost circumference of the compact disc, and pass the leads from the pickup (CM52) and spindle motor (CM48) through pin (a) of the chassis (CM39). Arrange the leads from the loading/sled motor (CM38) and sensor switch (micro switch) (CM26) by passing them through point (b) in the chassis (CM39). After securing the leads with the lug (CM41), check that the pickup (CM52) moves smoothly without the leads interfering with its movement.

② If no problems arise in the <1> check, secure the points shown in the figure using a bonding agent (Cemedine #575).

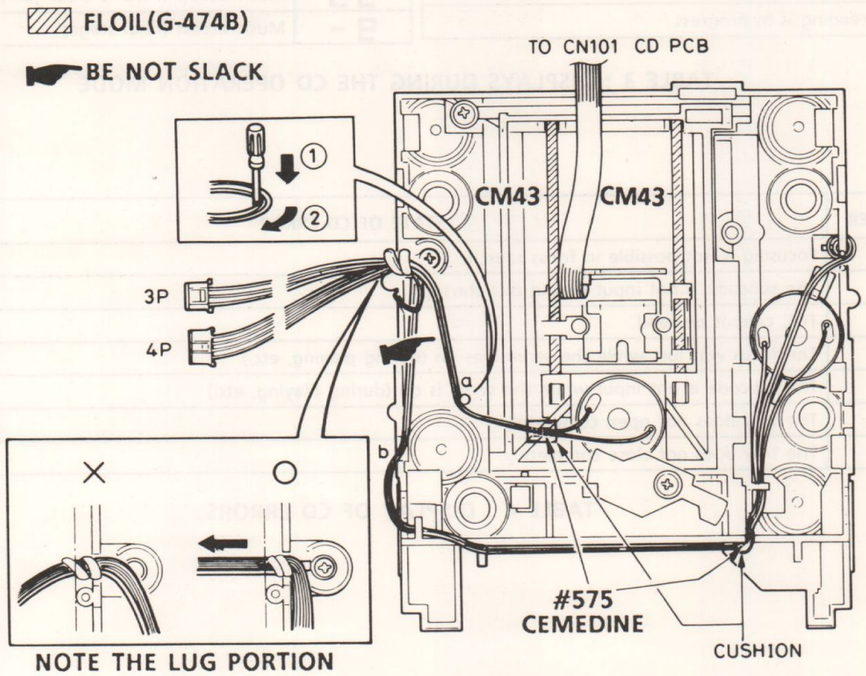

SERVICE MODE

Specifications

To enter any service mode other than timer debugging, first simultaneously press the OPEN/CLOSE and BAND keys on the CT unit. This accesses the service mode entry state. Now press one of the buttons on the CT unit to enter a service mode. As the service mode entry state is discontinued after 1 second elapses, the system will enter a service mode only if the next key is pressed within one second.

1. Confirm the clock

- When the CLOCK key is pressed during the service mode entry state, a rectangular wave with a frequency of one- fourth that of the oscillating frequency (1.048576MHz) is output from the micro processor's port CLKOUT.
- The clock output is stopped by pressing either the POWER or SET CLEAR key.

2. Timer debugging

- When the FAST key is pressed, the current time advances one minute and the seconds readout changes to 55 seconds. If the key is held down the time advances continuously.
- The FAST key, a concealed key not actually mounted to the set.

Note : For timer debugging, the service mode entry state (entered by simultaneously pressing the OPEN/CLOSE service mode entry key and the BAND key) is not necessary.

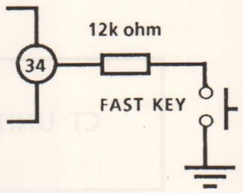

3. Checking the key input signal connections

- Enter this mode by pressing the MEMORY(TUNER) key during the service mode entry state.
- The entire LCD goes out once this mode is entered.
- In this mode, as keys on the CT unit (or remote control unit) are pressed segments on the LCD corresponding to each key on a one-to-one basis come on (i.e. the lit portions gradually increase). (Refer to Table 1.)

KEY	DISPLAY	KEY	DISPLAY	KEY	DISPLAY
TIME / FADE	TIME	CLOCK	REC	FUNCTION	DIGIT 3 : 8
REPEAT	REPEAT	SLEEP	SLEEP	BAND	DIGIT 4 : 8
STOP	ONE	TUNING UP	SIDE A	PST UP	1 OF CALENDAR
CD MEMORY	PROG.	TUNING DOWN	SIDE B	PST DOWN	2 OF CALENDAR
PLAY / PAUSE	▷	WAKE UP	WAKE UP	FM/TUNE MODE	3 OF CALENDAR
RANDOM	RANDOM	TIMER	TIMER	WIDE	4 OF CALENDAR
OPEN / CLOSE	ALL	SET / CLEAR	@	FWD	DISC
EDIT	EDIT	MEMORY	5 OF CALENDAR	BACK	TRACK
COMPUTER REC	COMP. REC	POWER	DIGIT 2 : 8		

@ : Releases the key checking mode and returns the set to the normal mode.

TABLE 1 : CORRESPONDING KEYS AND DISPLAYS IN THE KEY CHECKING MODE

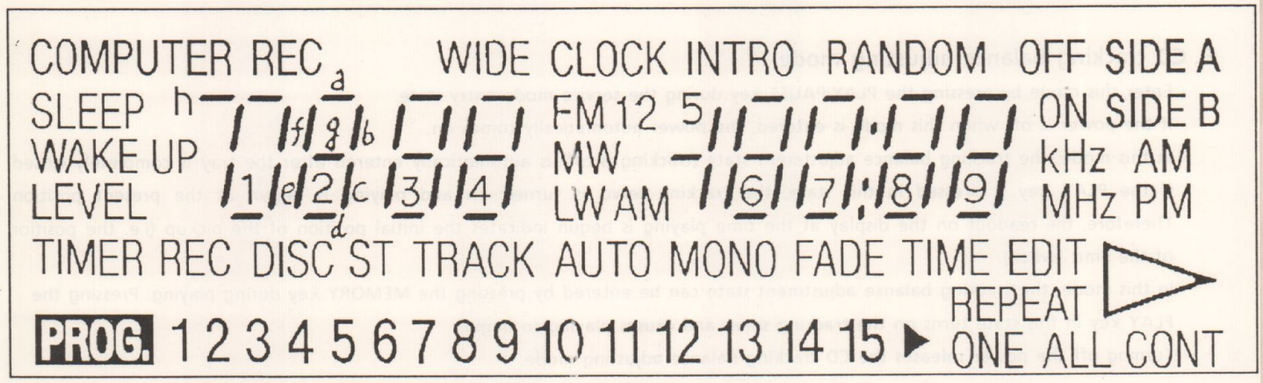

FIGURE 1 : LCD (LIQUID CRYSTAL DISPLAY)

4. Checking LCD connections

- Enter this mode by pressing the OPEN/CLOSE key during the service mode entry state. (See note.)
- The entire LCD goes out once this mode is entered.
- In this mode, one segment of the LCD lights each time the OPEN/CLOSE key is pressed.
- Press the SET/CLEAR key to exit this mode and return to the normal mode.

5. System connector checking mode

- Enter this mode by pressing the BAND key during the service mode entry state.
- Before entering this mode, connect a jig at the beginning of the system connector cord as shown in Figure 2.
- In this mode, check the signal connections shown in Table 2 for the set's CT unit and system connector cord.
- The results of the checking of connections appear on the LCD as shown in Table 2.
- Press the SET/CLEAR key to release the system connector checking mode and return to the normal mode.

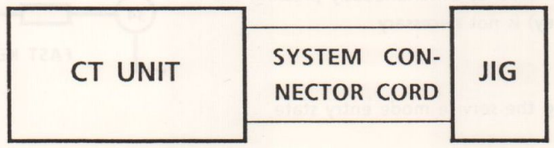

FIGURE 2 : CONNECTION DURING THE SYSTEM CONNECTOR CHECKING MODE

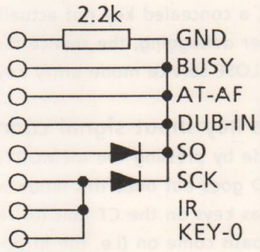

FIGURE 3 : CIRCUIT DIAGRAM OF THE CONNECTOR CHECKING JIG

STATE	DISPLAY
SO is N.G.	0
SCK is N.G.	1
DUB-IN is N.G.	2
AT-AF is N.G.	3

STATE	DISPLAY
BUSY is N.G.	4
IR is N.G.	5
All OK	-

Note: : The system connector checking mode cannot be entered when the SCK(AD unit) connection is defective.

TABLE 2 : DISPLAYS DURING SYSTEM CONNECTOR CHECKING

6. CD tracking balance adjusting mode

- Enter this mode by pressing the PLAY/PAUSE key during the service mode entry state.
- If the power is off when this mode is entered, the power automatically comes on.
- In this mode, the tracking balance adjustment state (tracking is off) is automatically entered after the tray is completely closed. If the PLAY key is pressed in this state, the tracking servo is turned on and playing is begun at the present position. Therefore, the readout on the display at the time playing is begun indicates the initial position of the pickup (i.e. the position of the limit switch).
- In this mode, the tracking balance adjustment state can be entered by pressing the MEMORY key during playing. Pressing the PLAY key in this state turns on the tracking servo and causes playing to begin.
- Turning off the power releases the CD tracking balance adjusting mode.

7. CD operation display mode

- Enter this mode by pressing the STOP key during the service mode entry state.
- If the power is off when this mode is entered, the power automatically comes on.

- In this mode, when CD function are used, displays like those shown in Table 3 (which represent CD operations different than normally displayed) appear in the LCD track number display.
- In this mode, the calendar numbers shown in Table 4 come on when an error occurs in CD operations, at which time the track number and calendar displays become fixed at their current readouts. To release these fixed displays, press the STOP key while operations are stopped.
- This mode is released when the power is turned off.

DISPLAY	OPERATION
00	Focus search has been begun
01	Focus search has been begun
02	Waiting for focusing
03	Focusing
04	Spindle kick is in progress
05	Both CLV and tracking are ON
06	Both CLV and tracking are ON
0-	Focus search has been completed (success, failure)
20	Tray closing has begun
21	Tray closing is in progress
22	Pick return (internal direction) is in progress
23	Pick return (external direction) is in progress
2-	Tray closing (pick return) has been completed
30	Spindle braking has begun
31	Spindle braking is in progress
32	Pick return is in progress
3-	Spindle braking and pick return have been completed
40	Fast forwarding is in progress
41	Rewinding is in progress
50	Playing has begun
51	Playing is in progress
52	Playing is in progress (skip return operation)
60	TOC reading has been begun
61	TOC reading is in progress

DISPLAY	OPERATION
62	TOC reading is in progress
6-	TOC reading has been completed (success/failure)
70	L-point access has been begun
71	L-point access (REV64 track jump)
72	L-point access (FWD64 track jump)
73	L-point access (REV16 track jump)
74	L-point access (FWD16 track jump)
75	L-point access (REV1 track jump)
76	L-point access has been completed
80	Pausing has begun
83	Pause (REV16 track jump)
84	Pause (FWD16 track jump)
85	Pause (REV1 track jump)
86	Pause (trace)
90	Music access has begun
91	Music access (high-speed access has begun)
92	Music access (high-speed access is in progress)
93	Music access (high-speed access has been completed)
94	Music access (high-speed access has been completed)
95	Music access (high-speed access has been completed)
96	Music access (REV64 track jump)
97	Music access (FWD64 track jump)
98	Music access (REV16 track jump)
99	Music access (FWD16 track jump)
9-	Music access (final stage)

TABLE 3 : DISPLAYS DURING THE CD OPERATION MODE

NUMBER	STATE OF CD ERROR
1	Focusing is not possible in focus search.
2	The subcode is not input during disc startup.
3	TOC cannot be read.
4	The focus was lost while the servo was on (during playing, etc.).
5	The subcode is not input while the servo is on (during playing, etc.).
6	The tray does not open completely.
7	The tray does not close completely.

TABLE 4 : DISPLAY OF CD ERRORS

Electrical Adjustment

So far we have presented explanations regarding compact disc player handling, notes prior to repair, handling the pick-up and disassembly of the unit. Be sure to carefully read these instructions before making any adjustments.

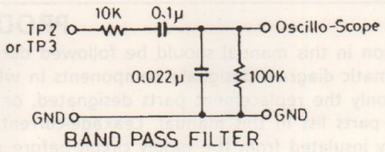

Preparations for Adjustments

Measuring instruments, tools and filter

(1) Test disc. : 4822 397 60161 (SONY - YEDS 18)
(2) Oscilloscope : SS5711 (10MHz or dual phenomenon)
or Memoryscope : DSS6521 (Storagescope)
(3) Digital voltmeter (Input impedance 1M ohm or more)
(4) Oscillator (400Hz, 300mV RMS)
(5) Frequency Counter (5MHz ; or more)
(6) Screw drivers (non-metalic) for adjustments
(7) Band Pass Filter
(8) AC Voltage Meter

Notes : a. The adjustments can be using the equipment produced by other manufactures provided that the performance of that equipment corresponds to that of the above listed models.
b. Use a 10 : 1 probe for observing signals on the oscilloscope and storage scope.
c. Test disc is subject change without notice.

1. Initial set

Set the SVR11 at its initial position of adjustment controls as shown in figure below.

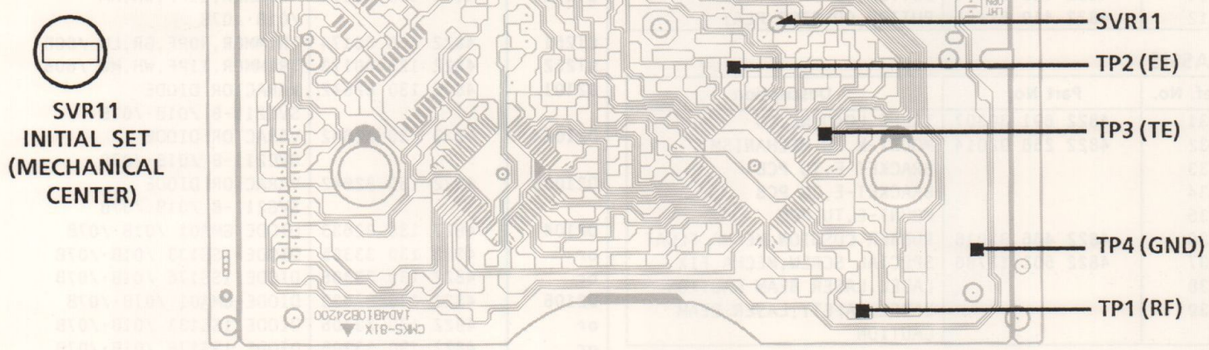

2. Tracking Balance Adjustment (SVR11)

1. Connect the oscilloscope to TP3 (TE) and TP4 (GND.).
2. Turn on the power of the unit. Insert test disc.
3. Play-back the test disc.
4. Continuously press the forward search ▸▸ or backward search ▸▸ button to do it.
5. Adjust SVR11 so that the TE (Tracking Error) signal waveform of TP3 on the oscilloscope is vertically symmetrical relative to 0V. (See figure right side)

*If the adjustment is imperfect, become run away the sled motor (pick-up sending motor), inferior playability.

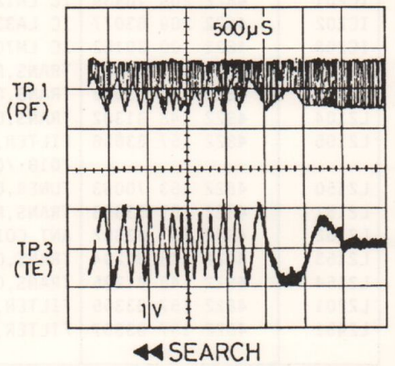

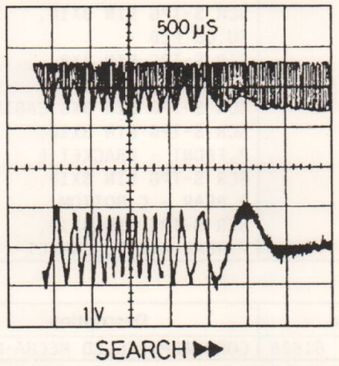

2. Other Adjustment of Tracking Balance (SVR11)

1. Set the service mode(CD tracking balance adjusting mode).
· Enter this mode by pressing the PLAY/PAUSE key during the service mode entry state. Pressing the PLAY / Pause key in this state turns on the tracking servo and causes playing to begin. (See service mode)
2. Connect the oscilloscope to TP3 (TE) and TP4 (GND).
3. Adjust SVR11 so that the TE (Traverse) signal waveform of TP3 on the oscilloscope is vertically symmetrical relative to 0V. Or may adjust SVR11 so that the DC voltage : (Peak Hold Level) - (Bottom Hold Level) of the traverse signal is 0V. (See figure right side)
4. If it were not for obtain waveform at the right figure, repeat item 2-1 ~2-3.

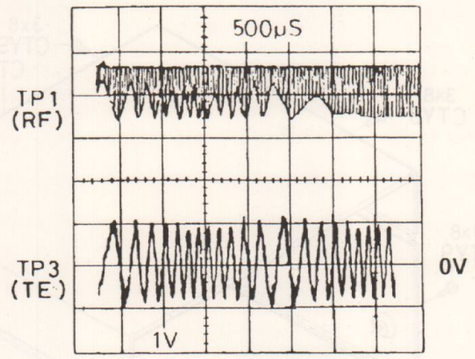

3. Focus Gain Confirmation

1. Connect the storage scope to TP2 (F.E : Focus Error) through the Band pass filter. (See BPF Figure)
2. Turn on the power of the unit.
3. Play-back the test disc.
4. Set the output of AF oscillator to 400Hz, 0.5V rms and connect to pin 24 (IC101) through the resistor : 120k ohms.
5. Confirm so that the voltage of the F.E signal waveform on the storage scope is 0.5V p-p, ±3db by through BPF.

* If this CONFIRMATION is imperfect, become weak the mechanical shock, inferior playability, and can not playback the Disc.

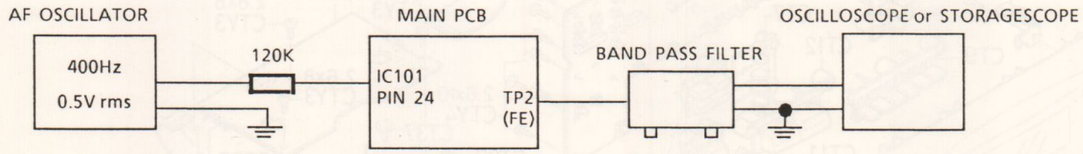

4. Tracking Gain Confirmation

1. Connect the storage scope to TP3 (T.E) through the Band pass filter. (See BPF Figure).
2. Turn on the power of the unit.
3. playback the test disc.
4. Set the output of AF oscillator to 400Hz, 0.5V rms and connect to pin 14 (IC101) through resistor 47k ohms.
5. Confirm so that the voltage of T.E signal waveform on the storage scope is 0.5V p-p, ±3db by through BPF.

* If this CONFIRMATION is imperfect, become weak the mechanical shock, inferior playability, and can not playback the Disc.

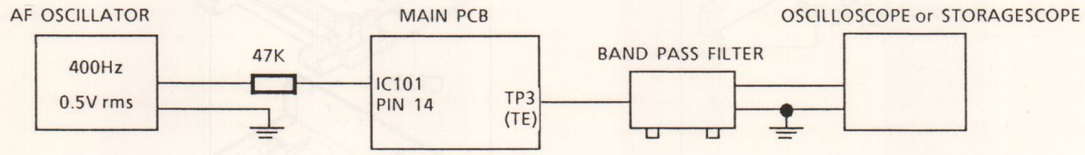

EXPLODED VIEW (TUNER / CD UNIT)

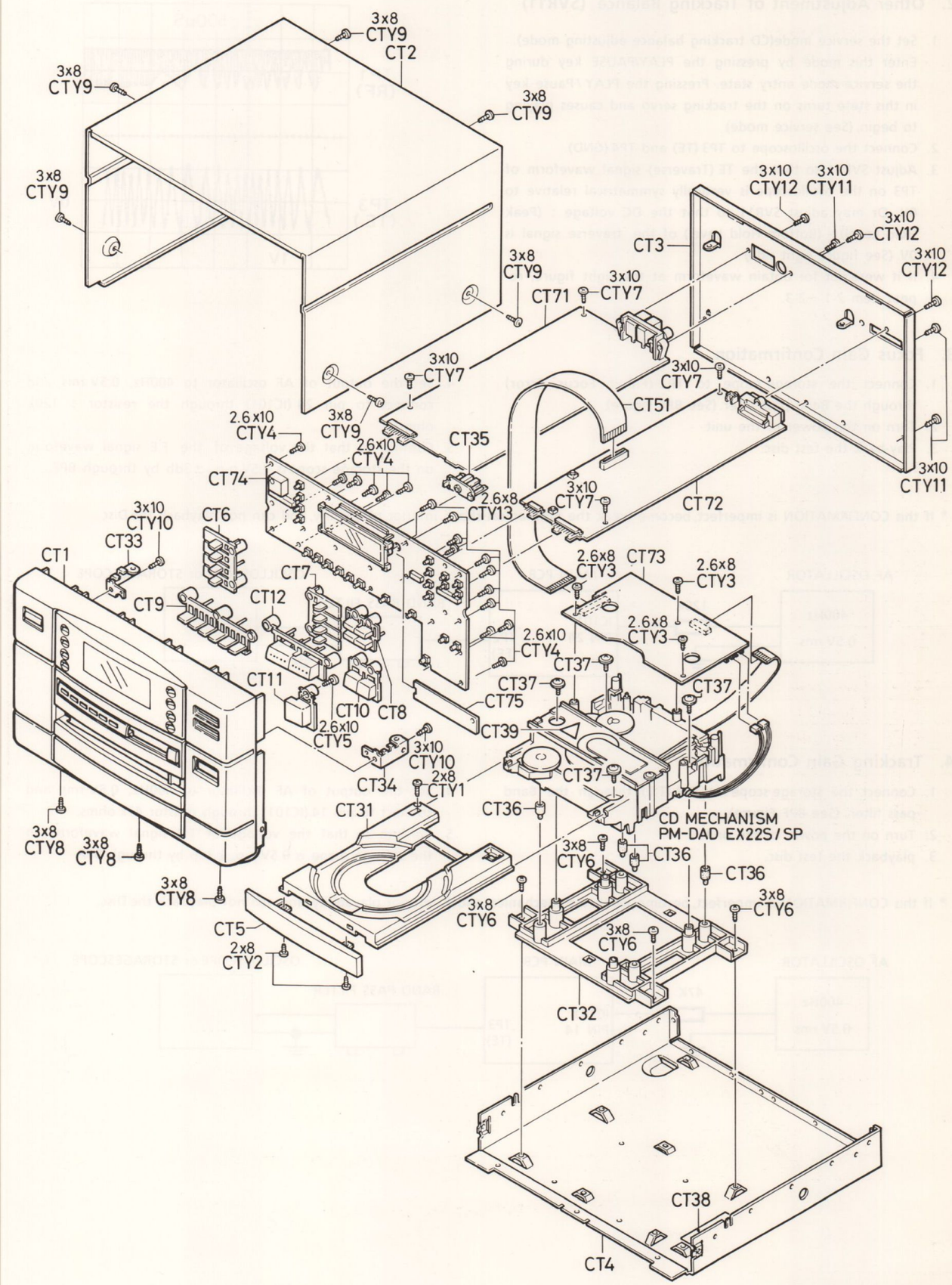

PARTS LIST (CD / TUNER UNIT)

PRODUCT SAFETY NOTICE

Each precaution in this manual should be followed during servicing. Components identified with the IEC symbol ⚠ in the parts list and the schematic diagram designate components in which safety can be of special significance. When replacing a component identified ⚠, use only the replacement parts designated, or parts with the same ratings of resistance, wattage or voltage that are designated in the parts list in this manual. Leakage-current or resistance measurements must be made to determine that exposed parts are acceptably insulated from the supply circuit before returning the product to the customer.

CAUTION: Regular type resistors and capacitors are not listed. To know those values, refer to the schematic diagram.

CABINET

Ref. No.	Part No.	Description
CT1	4822 426 51609	ASSY,PANEL,FRONT
CT2	4822 425 40194	ASSY,CABINET,TOP
CT3		PANEL,REAR,SINGAPORE /01B
or		PANEL,REAR,MALAYSIA /01B
CT3		PANEL,REAR,SINGAPORE /07B
or		PANEL,REAR,MALAYSIA /07B
CT3		PANEL,REAR,SINGAPORE /60B
or		PANEL,REAR,MALAYSIA /60B
CT3		PANEL,REAR,SINGAPORE
or		PANEL,REAR,MADE IN MALAYSIA
CT4		ASSY,CABINET,BOTTOM
CT5	4822 454 30476	ESCUTCHEON,CD TRAY FRONT
CT6	4822 410 62486	BUTTON,TIMER ETC.
CT7	4822 410 62486	BUTTON,BAND ETC.
CT8	4822 410 62414	BUTTON,TUNER,TUNING·PRESET
CT9	4822 410 62415	BUTTON,CD EDIT ETC.
CT10	4822 410 62416	BUTTON,CD SKIP/SEARCH
CT11	4822 410 62417	BUTTON,CD OPEN/CLOSE
CT12	4822 410 62485	BUTTON,CD STOP·PLAY

CHASSIS

Ref. No.	Part No.	Description
CT31	4822 691 30307	TABLE,LOADING,CD
CT32	4822 256 92014	MOUNT-M,CD MECHANISM
CT33		BRACKET-E,TU PCB
CT34		BRACKET-E,CD PCB
CT35		MOUNT-E,TU PCB
CT36	4822 466 93016	RUBBER CUSHION,MECHA FLOAT
CT37	4822 502 13786	SPECIAL SCREW,MECHA FIX
CT38		LABEL,LASER BEAM CAUTION
CT39		LABEL,SAFETY,LASER BEAM CAUTION

FIXING PARTS

Ref. No.	Part No.	Description
CTY1		SCR S-TPG PAN 2X8, CD TRAY STOPPER
CTY2		SCR S-TPG BIN 2X8, CD TRAY ESCUTCHEON
CTY3		SCR S-TPG BIN 2.6X8,CD PCB
CTY4		SCR S-TPG BIN 2.6X10, FRONT PCB
CTY5		SCR S-TPG BIN 2.6X10, P.FRONT - BUTTON
CTY6		SCR S-TPG BIN 3X8, C.BOTTOM - MOUNT-M
CTY7		SCR S-TPG BIN 3X10, TU,CD PCB
CTY8		SCR S-TPG BIN 3X8, P.FRONT - C/BOTTOM
CTY9		SCR S-TPG BIN 3X8,CABINET
CTY10		SCR S-TPG BIN 3X10, P.FRONT - BRACKET-E
CTY11		SCR S-TPG BIN 3X10, P.REAR - C.BOTTOM
CTY12		SCR S-TPG BIN 3X10, P.REAR-ANT.T,CONNECT

ELECTRICAL PARTS

Ref. No.	Part No.	Description
CT51	4822 321 61828	CORD,22P,FFC,CD MECHA-MICON

TUNER P.C.BOARD ASSY

Ref. No.	Part No.	Description
CT71		ASSY,PCB,TU MAIN /01B
or		ASSY,PCB,TU MAIN /07B
or		ASSY,PCB,TU MAIN /60B
		SHIELD PLATE,SYMBOL SIDE /01B·/07B
		SHIELD PLATE,PATTERN SIDE /01B·/07B
C2152	4822 121 43998	POLYPRO 470P J 100V /60B
C2155	4822 121 70001	POLYPRO 560P J 100V /60B
C2304	4822 121 42872	POLYPRO 1000P J 100V
C2458	4822 124 21903	NP-ELECT 1U Q 50V
CF201	4822 242 81287	FILTER,CERAMIC,10.7MHZ,FM
CF202	4822 242 81287	FILTER,CERAMIC,10.7MHZ,FM
CF204	4822 242 81038	FILTER,459KHZ,AM
CF205	4822 242 80307	I.F FILTER,459KHZ,AM
CN201	4822 290 61034	TERMINAL,FM,ANT
CN241		PLUG,14P,TO FRONT PCB
CT201	4822 125 60173	TRIMMER,11PF,WH,AM /01B·/07B
CT251	4822 125 60174	TRIMMER,30PF,GR,LW /60B
CT252	4822 125 60173	TRIMMER,11PF,WH,MW /60B
D2101	4822 130 82642	VARACTOR DIODE SVC211-B /01B·/07B
D2102	4822 130 82642	VARACTOR DIODE SVC211-B /01B·/07B
D2103	4822 130 82642	VARACTOR DIODE SVC211-B /01B·/07B
D2104	4822 130 82633	DIODE GMA01 /01B·/07B
or	4822 130 33305	DIODE 1SS133 /01B·/07B
or	4822 130 33305	DIODE 1SS176 /01B·/07B
D2105	4822 130 82633	DIODE GMA01 /01B·/07B
or	4822 130 33305	DIODE 1SS133 /01B·/07B
or	4822 130 33305	DIODE 1SS176 /01B·/07B
D2151	4822 130 31542	VARACTOR DIODE SVC321SPA-C-2 /60B
D2152	4822 130 31542	VARACTOR DIODE SVC321SPA-C-2 /60B
D2201	4822 130 82633	DIODE GMA01
or	4822 130 33305	DIODE 1SS133
or	4822 130 33305	DIODE 1SS176
D2301	4822 130 82633	DIODE GMA01
or	4822 130 33305	DIODE 1SS133
or	4822 130 33305	DIODE 1SS176
D2302	4822 130 82633	DIODE GMA01
or	4822 130 33305	DIODE 1SS133
or	4822 130 33305	DIODE 1SS176
IC201	4822 209 70439	IC LA1265-AUD
IC202	4822 209 63077	IC LA3361
IC203	4822 209 30152	IC LM7001
L2102	4822 157 63652	TRANS,RF,FM /01B·/07B
L2103	4822 157 63653	TRANS,RF,FM /01B·/07B
L2104	4822 148 81302	TRANS,OSC,FM /01B·/07B
L2105	4822 157 63656	FILTER,CHOKE,2.2UH,FM /01B·/07B
L2150	4822 153 70053	TUNER,COIL,RF,AM /01B·/07B
L2151	4822 157 63353	TRANS,RF,LW /60B
L2152	4822 157 63352	ANT COIL,MW /60B
L2153	4822 148 81294	TRANS,OSC,MW /60B
L2154	4822 148 81295	TRANS,OSC,LW /60B
L2201	4822 157 63355	FILTER,CHOKE,1MH,AM /60B
L2451	4822 157 63357	FILTER,CHOKE,100UH

Ref. No.	Part No.	Description
Q2101	4822 130 41813	TR 2SK193-LL /01B·/07B
or	4822 130 41813	TR 2SK193-ML /01B·/07B
Q2102	4822 130 60886	TR 2SC1923-Y /01B·/07B
Q2103	4822 130 41813	TR 2SK193-LL /01B·/07B
or	4822 130 41813	TR 2SK193-ML /01B·/07B
Q2104	4822 130 60886	TR 2SC1923-Y /01B·/07B
Q2105	4822 130 60886	TR 2SC1923-Y
Q2131	4822 130 43793	TR 2SC1815-GR /60B
or	4822 130 43793	TR 2SC945A-K /60B
Q2152	4822 130 43819	TR 2SC2878-A /60B
or	4822 130 43819	TR 2SC2878-B /60B
Q2153	4822 130 43819	TR 2SC2878-A /60B
or	4822 130 43819	TR 2SC2878-B /60B
Q2154	4822 130 43819	TR 2SC2878-A /60B
or	4822 130 43819	TR 2SC2878-B /60B
Q2155	4822 130 43819	TR 2SC2878-A /60B
or	4822 130 43819	TR 2SC2878-B /60B
Q2156	4822 130 43819	TR 2SC2878-A /60B
or	4822 130 43819	TR 2SC2878-B /60B
Q2157	4822 130 41813	TR 2SK193-LL /60B
or	4822 130 41813	TR 2SK193-ML /60B
Q2158	4822 130 43793	TR 2SC1815-GR /60B
or	4822 130 43793	TR 2SC945A-K /60B
Q2201	4822 130 62778	TR 2SC380TM-O
Q2202	4822 130 43793	TR 2SC1815-GR
or	4822 130 43793	TR 2SC945A-K
Q2203	4822 130 62615	TR 2SA1015-GR
Q2301	4822 130 43793	TR 2SC1815-GR
or	4822 130 43793	TR 2SC945A-K
Q2302	4822 130 62769	TR RN2207
or	4822 130 62769	TR BN1A4P
or	4822 130 62769	TR DTA114YS
Q2351	4822 130 62769	TR RN2207
or	4822 130 62769	TR BN1A4P
or	4822 130 62769	TR DTA114YS
Q2352	4822 130 62769	TR RN2207
or	4822 130 62769	TR BN1A4P
or	4822 130 62769	TR DTA114YS
Q2354	4822 130 62769	TR RN2207
or	4822 130 62769	TR BN1A4P
or	4822 130 62769	TR DTA114YS
Q2355	4822 130 62769	TR RN2207
or	4822 130 62769	TR BN1A4P
or	4822 130 62769	TR DTA114YS
Q2451	4822 130 43793	TR 2SC1815(L)-GR
or	4822 130 43793	TR 2SC1815(L)-Y
Q2452	4822 130 43793	TR 2SC1815(L)-GR
or	4822 130 43793	TR 2SC1815(L)-Y
Q2461	4822 130 43793	TR 2SC1815-GR
or	4822 130 43793	TR 2SC945A-K
Q2701	4822 130 43793	TR 2SC1815-GR
or	4822 130 43793	TR 2SC945A-K
Q2702	4822 130 43819	TR 2SC2878-A
or	4822 130 43819	TR 2SC2878-B
Q2801	4822 130 43793	TR 2SC1815-GR
or	4822 130 43793	TR 2SC945A-K
Q2901	4822 130 43819	TR 2SC2878-A
or	4822 130 43819	TR 2SC2878-B
R2465	⚠4822 052 10339	CARBON 33 JB 1/4W
S2451	4822 277 21672	SWITCH,SLIDE, CHANNEL STEP /01B
SVR23	4822 100 11961	POTENTIOMETER,10K(B),VCO
or	4822 100 11961	SEMI-FIXED V.R,10K(B),VCO
T2201	4822 157 70385	TRANS,IF,FM /01B·/07B
T2202	4822 148 81179	I.F.T,10.7MHZ,FM
T2203	4822 157 63361	MX COIL /60B
T2701	4822 157 63356	COIL,CHOKE,TRAP /60B
T2801	4822 157 63356	COIL,CHOKE,TRAP /60B
TU201	4822 210 10518	TUNER,FM /60B
X2451	4822 242 81381	RESONATOR,7.2MHZ,FOR IC203
or	4822 242 81381	RESONATOR,7.2MHZ,FOR IC203

CD SYSCON P.C.BOARD ASSY

Ref. No.	Part No.	Description
CT72		ASSY,PCB, CD MICON
C1301	4822 124 11313	DL-ELECT 0.047F Z 5.5V, FOR MICON BACKUP
C1302		ELECT 1000U M 6.3V
C1522		POLYESTER 1000P K 50V
C1523		POLYESTER 1000P K 50V
C1608		ELECT 2200U M 16V,FOR +9V
C1609		ELECT 1000U M 16V,FOR -9V
CN131		PLUG,13P,CD-FRONT
CN132		PLUG,6P,CD-FRONT
CN141	4822 265 51341	SOCKET,22P,CD-MECHA
or	4822 265 51341	SOCKET,22P,CD-MECHA
CN161	4822 267 60344	SOCKET,19P,CT-DA UNIT
D1301	4822 130 82634	DIODE DS442X
or	4822 130 42112	DIODE 1S2473
D1302	4822 130 83264	ZENER DIODE GZA3.9Z
or	4822 130 83264	ZENER DIODE MTZ3.9B
D1303	4822 130 82634	DIODE DS442X
or	4822 130 42112	DIODE 1S2473
D1304	4822 130 82634	DIODE DS442X
or	4822 130 42112	DIODE 1S2473
D1601	4822 130 32508	DIODE DSF10C
or	4822 130 32816	DIODE 1SR35-200A
D1602	4822 130 32508	DIODE DSF10C
or	4822 130 32816	DIODE 1SR35-200A
D1603	4822 130 32508	DIODE DSF10C
or	4822 130 32816	DIODE 1SR35-200A
D1604	4822 130 32508	DIODE DSF10C
or	4822 130 32816	DIODE 1SR35-200A
D1605	4822 130 42112	DIODE 1S2473
or	4822 130 82634	DIODE DS442X
IC103	4822 209 31687	IC UPD75116GF-F56-3BE
IC107	4822 209 30161	IC M5278D05
IC108	4822 209 83825	IC NJM79L05A
IC109	4822 209 71373	IC NJM78L05A
L1301	4822 157 70343	FILTER,CHOKE,10UH
L1501	4822 157 70341	INDUCTOR,FERITE,FOR EMI, CD OUT L-CH
L1502	4822 157 70341	INDUCTOR,FERITE,FOR EMI, CD OUT R-CH
Q1301	4822 130 42715	TR 2SA933S-R
or	4822 130 42715	TR 2SA933S-S
or	4822 130 42715	TR 2SA1048-Y
Q1302	4822 130 42298	TR 2SC1740S-R
or	4822 130 42298	TR 2SC1740S-S
or	4822 130 42298	TR 2SC2458-GR
Q1303	4822 130 42715	TR 2SA933S-R
or	4822 130 42715	TR 2SA933S-S
or	4822 130 42715	TR 2SA1048-Y
Q1304	4822 130 42298	TR 2SC1740S-R
or	4822 130 42298	TR 2SC1740S-S
or	4822 130 42298	TR 2SC2458-GR
Q1305	4822 130 42715	TR 2SA933S-R
or	4822 130 42715	TR 2SA933S-S
or	4822 130 42715	TR 2SA1048-Y
Q1500	4822 130 62768	TR 2SD1468S-S
Q1501	4822 130 62768	TR 2SD1468S-S
S1301	4822 276 13304	SWITCH,TACT,RESET
X1301	4822 242 81291	RESONATOR,XTAL,4.19MHZ,FOR IC103

CD MAIN P.C.BOARD ASSY

Ref. No.	Part No.	Description
CT73		ASSY,PCB,CD MECHA
CN101	4822 267 51207	SOCKET,13P,FOR PICKUP(FFC)
CN102		PLUG,4P,FOR MOTOR
CN103		PLUG,3P,FOR SWITCH
CN104	4822 267 60345	SOCKET,22P,TO CD MICON(FFC)
or	4822 267 60345	SOCKET,22P,TO CD MICON(FFC)
IC101	4822 209 31678	IC LA9210M
IC102	⚠4822 209 31679	IC LA6524
IC104	4822 209 31778	IC LC7866E

Ref. No.	Part No.	Description
IC105	4822 209 31682	IC SM5870DS
IC106	4822 209 30159	IC XRA15218F
or	4822 209 30159	IC BA15218F
Q101	4822 130 62938	TR 2SA1037K-R
Q102	4822 130 61537	TR 2SC2412K-R
Q103	4822 130 61537	TR 2SC2412K-R
SVR11	4822 100 11961	POTENTIOMETER,10K(B),T.BAL
TP101		TERMINAL,TEST POINT,RF
TP102		TERMINAL,TEST POINT,FE
TP103		TERMINAL,TEST POINT,TE
TP104		TERMINAL,TEST POINT,GND
TP105		TERMINAL,TEST POINT,PLL
X101	4822 242 81387	RESONATOR,16.93MHZ,FOR IC104

FRONT P.C.BOARD ASSY

Ref. No.	Part No.	Description
CT74		ASSY,PCB, FRONT /01B·/07
or		ASSY,PCB, FRONT /60B
		REFLECTOR,LCD
		SHEET,LCD
CN251	4822 267 51208	SOCKET,13P,CD MICON PCB
CN252	4822 267 41076	SOCKET,6P,CD MICON PCB
CN253	4822 267 51209	SOCKET,14P,TUNER PCB
D2501	4822 130 42112	DIODE 1S1588
or	4822 130 42112	DIODE 1S2473
or	4822 130 82634	DIODE DS442X
D2502	4822 130 42112	DIODE 1S1588
or	4822 130 42112	DIODE 1S2473
or	4822 130 82634	DIODE DS442X
IC251	4822 209 31686	IC UPD75306GF-225-3B9
L2501	4822 157 63357	FILTER,CHOKE,100UH
LCD21	4822 130 91168	LCD(LIQUID CRYSTAL DISPLAY)
S2511	4822 276 30418	SWITCH,TACT,OPEN/CLOSE
S2512	4822 276 30418	SWITCH,TACT,PLAY/PAISE
S2513	4822 276 30418	SWITCH,TACT,STOP
S2514	4822 276 30418	SWITCH,TACT,REPEAT
S2515	4822 276 30418	SWITCH,TACT,CD MEMORY
S2516	4822 276 30418	SWITCH,TACT,C.REC
S2517	4822 276 30418	SWITCH,TACT,EDIT
S2518	4822 276 30418	SWITCH,TACT,TIME/FADE
S2521	4822 276 30418	SWITCH,TACT,CLOCK
S2522	4822 276 30418	SWITCH,TACT,SLEEP
S2523	4822 276 30418	SWITCH,TACT,WAKE UP
S2524	4822 276 30418	SWITCH,TACT,TIMER
S2525	4822 276 30418	SWITCH,TACT,PST DOWN
S2526	4822 276 30418	SWITCH,TACT,FWD
S2527	4822 276 30418	SWITCH,TACT,BACK
S2528	4822 276 30418	SWITCH,TACT,RANDOM
S2531	4822 276 30418	SWITCH,TACT,BAND
S2532	4822 276 30418	SWITCH,TACT,CLEAR
S2533	4822 276 30418	SWITCH,TACT,TU MEMORY
S2534	4822 276 30418	SWITCH,TACT,MODE
S2535	4822 276 30418	SWITCH,TACT,PST UP
S2536	4822 276 30418	SWITCH,TACT,TUN UP
S2537	4822 276 30418	SWITCH,TACTTUN DOWN
S2540	4822 130 83315	PHOTO DIODE SPS-422-1, IR RECEIVER
or	4822 130 83315	OPTO CONNECTOR,IR RESEIVER
X2501	4822 242 81288	RESONATOR,CERAMIC,3P, 4.19MHZ,FOR IC251

LED (LCD BACK LIGHT) P.C.BOARD ASSY

Ref. No.	Part No.	Description
CT75		ASSY,PCB, LED
CN562		ASSY,CONNECTOR-S,2P,FROM FRONT
D5551	4822 130 83272	LED CL-170G-CD-AL
or	4822 130 83272	LED CL-170G-CD-BL
or	4822 130 83272	LED CL-170G-CD-CL

Ref. No.	Part No.	Description
D5552	4822 130 83272	LED CL-170G-CD-AL
or	4822 130 83272	LED CL-170G-CD-BL
or	4822 130 83272	LED CL-170G-CD-CL
D5553	4822 130 83272	LED CL-170G-CD-AH
or	4822 130 83272	LED CL-170G-CD-BH
or	4822 130 83272	LED CL-170G-CD-CH
D5554	4822 130 83272	LED CL-170G-CD-AH
or	4822 130 83272	LED CL-170G-CD-BH
or	4822 130 83272	LED CL-170G-CD-CH
D5555	4822 130 83272	LED CL-170G-CD-AH
or	4822 130 83272	LED CL-170G-CD-BH
or	4822 130 83272	LED CL-170G-CD-CH
D5556	4822 130 83272	LED CL-170G-CD-AL
or	4822 130 83272	LED CL-170G-CD-BL
or	4822 130 83272	LED CL-170G-CD-CL
D5557	4822 130 83272	LED CL-170G-CD-AL
or	4822 130 83272	LED CL-170G-CD-BL
or	4822 130 83272	LED CL-170G-CD-CL
D5558	4822 130 83272	LED CL-170G-CD-AL
or	4822 130 83272	LED CL-170G-CD-BL
or	4822 130 83272	LED CL-170G-CD-CL
D5559	4822 130 83272	LED CL-170G-CD-AH
or	4822 130 83272	LED CL-170G-CD-BH
or	4822 130 83272	LED CL-170G-CD-CH
D5560	4822 130 83272	LED CL-170G-CD-AL
or	4822 130 83272	LED CL-170G-CD-BL
or	4822 130 83272	LED CL-170G-CD-CL
D5561	4822 130 83272	LED CL-170G-CD-AH
or	4822 130 83272	LED CL-170G-CD-BH
or	4822 130 83272	LED CL-170G-CD-CH
D5562	4822 130 83272	LED CL-170G-CD-AL
or	4822 130 83272	LED CL-170G-CD-BL
or	4822 130 83272	LED CL-170G-CD-CL
D5563	4822 130 83272	LED CL-170G-CD-AH
or	4822 130 83272	LED CL-170G-CD-BH
or	4822 130 83272	LED CL-170G-CD-CH
D5564	4822 130 83272	LED CL-170G-CD-AH
or	4822 130 83272	LED CL-170G-CD-BH
or	4822 130 83272	LED CL-170G-CD-CH
D5565	4822 130 83272	LED CL-170G-CD-AL
or	4822 130 83272	LED CL-170G-CD-BL
or	4822 130 83272	LED CL-170G-CD-CL
D5566	4822 130 83272	LED CL-170G-CD-AH
or	4822 130 83272	LED CL-170G-CD-BH
or	4822 130 83272	LED CL-170G-CD-CH
D5567	4822 130 83272	LED CL-170G-CD-AH
or	4822 130 83272	LED CL-170G-CD-BH
or	4822 130 83272	LED CL-170G-CD-CH
D5568	4822 130 83272	LED CL-170G-CD-AL
or	4822 130 83272	LED CL-170G-CD-BL
or	4822 130 83272	LED CL-170G-CD-CL
D5569	4822 130 83272	LED CL-170G-CD-AH
or	4822 130 83272	LED CL-170G-CD-BH
or	4822 130 83272	LED CL-170G-CD-CH
D5570	4822 130 83272	LED CL-170G-CD-AL
or	4822 130 83272	LED CL-170G-CD-BL
or	4822 130 83272	LED CL-170G-CD-CL

EXPLODED VIEW (CD MECHANISM)

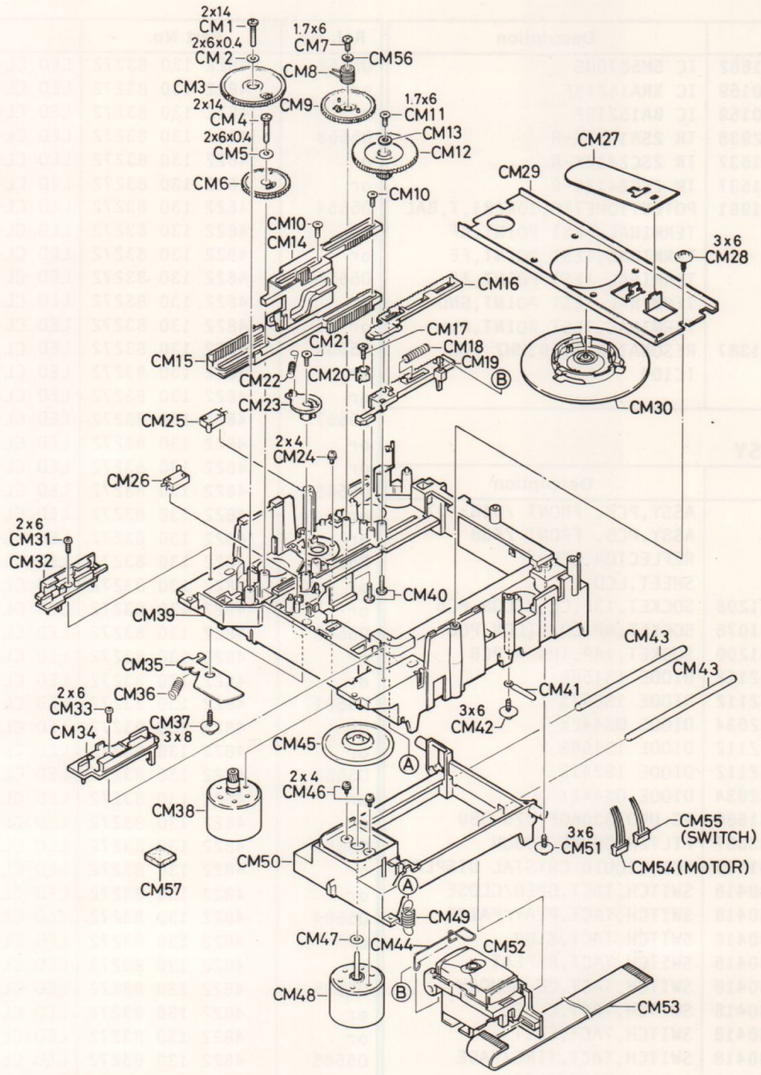

CD MECHANISM (PM-DAD EX22S / SP)

Ref. No.	Part No.	Description
CM2	4822 532 12082	WASHER V 2X6X0.4,GEAR FIX
CM3	4822 522 33094	GEAR,TRAY MOVE
CM5	4822 532 12082	WASHER V 2X6X0.4,GEAR FIX
CM6	4822 522 33095	GEAR,TRAY
CM8	4822 522 33294	ASSY,GEAR,CLUTCH
CM9	4822 522 33292	GEAR,CLUTCH OUTER
CM10	4822 502 13787	SPECIAL SCREW,SLIDE 14
CM12	4822 522 33097	GEAR,PICK SLED
CM13	4822 532 52479	SPECIAL WASHER,PICK GEAR 12
CM14	4822 402 61386	SLIDE,BASE UP/DOWN
CM15	4822 402 61391	SLIDE,TRAY
CM16	4822 522 33098	GEAR,PICK RACK UPPER
CM17	4822 502 13787	SPECIAL SCREW,GEAR 20 FIX
CM18	4822 492 42554	SPRING,COMP,RACK BACK
CM19	4822 522 33099	GEAR,PICK RACK LOWER
CM20	4822 522 33101	GEAR,BASE/TRAY TIMING
CM21	4822 502 13787	SPECIAL SCREW,GEAR 23
CM22	4822 492 33348	SPRING,TENSION,GEAR 23
CM23	4822 522 33293	GEAR,TIMING
CM24	4822 502 13788	SCR PAN+SW 2X4,SLED MOTOR
CM25	4822 276 13124	SWITCH,LIMIT
CM26	4822 276 13124	SWITCH,TRAY OPEN
CM27	4822 492 71176	SPRING PLATE,CHUCKING
CM28	4822 502 13789	SCR S-TPG BRZ+FLG 3X6
CM30	4822 528 50327	ASSY,PULLEY
CM32	4822 402 61383	BRACKET-M,TRAY GUIDE(L)

Ref. No.	Part No.	Description
CM33	4822 502 21235	SCR S-TPG PAN 2X6,BRACKET
CM34	4822 402 61384	BRACKET-M,TRAY GUIDE(R)
CM35	4822 402 61436	LEVER,BASE
CM36	4822 492 42555	SPRING,COMP,BASE LEVER MOVE
CM38	4822 361 30356	ASSY,MOTOR,LOADING/SLED
CM39	4822 464 50962	CHASSIS,LOADING
CM33	4822 502 21235	SCR S-TPG PAN 2X6,BRACKET
CM40	4822 502 13787	SPECIAL SCREW,BOSS
		REINFORCEMENT
CM41		LUG,WIRE DRESS
CM43	4822 535 93332	SHAFT,PICK RAIL
CM44	4822 492 71175	SPRING,WIRE,PICK BACK
CM45	4822 528 10824	TURNTABLE,CD CHUCKING
CM46	4822 502 13788	SCR PAN+SW 2X4,SPINDLE M
CM47	4822 532 52353	SPECIAL WASHER,ADHESIVE
		ESCAPE STOP
CM48	4822 361 30357	COMMUTATE MOTOR,SPINDLE
CM49	4822 492 33347	SPRING,TENS,CHASSIS PULLUP
CM50	4822 464 50926	CHASSIS,BASE
CM51	4822 502 13789	SCR S-TPG BRZ+FLG 3X6
CM52	4822 691 30289	PICKUP,LASER,SF-P1PS
or	4822 691 30289	PICKUP,LASER,SF-90PS
CM53	4822 321 61827	CORD,PICK UP
CM56	4822 532 12186	SPECIAL WASHER,GEAR 8 FIX
CM57	4822 466 62249	CUSHION,MOTOR LEAD FIX

MEMO

IC BLOCK DIAGRAM (CD)

IC101 LA9210M (Servo Signal Processor)

No.	PIN NAME	I/O	FUNCTION
1	NC		Non Connection
2	VEE		-5V
3	E	I	IV Convert Input (from Photo Diode E)
4	F	I	IV•Convert Input (from Photo diode F)
5	FN	I	IV Converter Input
6	FO	O	IV Converter Output
7	TEAO	O	Tracking Error Amplifier Output
8	VREF2	I	Reference Voltage 2
9	VREF3	I	Reference Voltage 3
10	TES1	I	Test Input
11	ATSC	I	+ Input of Anti Shock Detect Amplifier
12	ATSC-	I	- Input of Anti Shock Detect Amplifier
13	TPA+	I	- Input of Tracking Pulse Amplifier
14	TPA-	I	+ Input of Tracking Pulse Amplifier
15	TPAO	O	Tracking Pulse Amplifier Output
16	TOFS	I	Input for Tracking Offset
17	THDS	I	Tracking Servo Hold Switch
18	TD+	I	Add the Track Jump Pulse
19	JPO	O	Track Jump Pulse Amplifier Output
20	SLEQ	I	Input for Sled Servo Equalizer
21	TDO	O	Tracking Actuator Coil Driver Output
22	FDO	O	Focus Actuator Coil Driver Output
23	FD-	I	Input for Focus Actuator Coil Driver
24	FSW	I	Focus Servo Switch
25	NC		Non Connection
26	FEAO	O	Focus Error Amplifier Output
27	FE+	I	+ Input of Focus Error Amplifier
28	FD+	I	+ Input of Focus Actuator Coil Driver
29	SPO	O	CLV Error Amplifier Output
30	SPO-	I	Input for Spindle Motor Driver
31	SPDO	O	Spindle Motor Driver Output
32	VEE		-5V
33	SLDO	O	Sled Motor Driver Output
34	SL-	I	- Input of Sled Motor Driver
35	SL+	I	+ Input of Sled Motor Driver
36	VCC		+5V
37	SLSW	I	Sled Servo Switch
38	DEFO	O	Defect Signal Output
39	2FREQ	I	Input for VCO
40	DRF	O	Focusing Servo ON : High Level

No.	PIN NAME	I/O	FUNCTION
41	NC		Non Connection
42	JP-	I	- Input of Track Jump Pulse Amplifier
43	JP+	I	+ Input of Track Jump Pulse Amplifier
44	THLD	I	Hold of Output Voltage of Tracking Servo
45	TGL	I	Tracking Gain Low
46	TOFF	I	Input For Off the Tracking Servo
47	TES	O	Tracking Error Signal
48	HFL	O	Detect Track Signal
49	FZD	O	Detect S Carve of Focus Error Signal
50	FOCS	I	Input For Off the Focus Servo
51	CLV-	I	- Input of CLV Error Amplifier
52	CLV+	I	+ Input of CLV Error Amplifier
53	SLCO	O	Slice Level Control Amplifier Output
54	$\overline{\text{EFMO}}$	I	$\overline{\text{EFMO}}$ (RF) Signal
55	AI	I	EFMO (RF) Signal
56	VDD		+5V
57	PDO	I	+ Input of VCO Control Amplifier
58	PDO-	I	- Input of VCO Control Amplifier
59	VCOC	I	VCO Control Amplifier Output
60	VCOO	O	VCO Output
61	LF1	I	Input of Low Pass Filter
62	CLK	I	Clock
63	LASER	I	Laser Control Signal
64	66/60	I	Select of DSP LC7866/LC7860
65	NC		Non Connection
66	DF2	I	Input for Defect Pulse width Control
67	DF1	I	Input for Defect Pulse width Control
68	PH3	O	Defect Detect Timing
69	BH	I	Track Detect Timing
70	PH	I	Focus Detect Timing
71	GND		Ground
72	RF SUM	O	RF SUM Amplifier Output
73	RFS-	O	IV Converter Output
74	LDO	O	Laser Diode ON
75	LDS	I	Input of Auto Laser Power Control
76	LDC	I	Input of Auto Laser Power Control
77	VDD		+5V
78	FIN1	I	IV Convert Input (From Photo Diode A+C)
79	FIN2	I	IV Convert Input (From Photo Diode B+D)
80	VREF1	I	Reference Voltage 1

IC102 LA6524 (Dual Motor & Actuator Coil Driver)

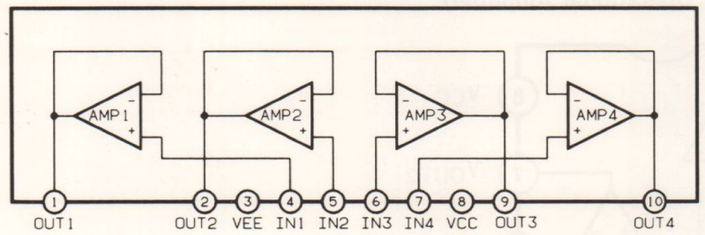

IC BLOCK DIAGRAM (CD SYSCON)

IC103 µPD75116GF-F56-3BE (Micro Processor)

PIN No.	SIGNAL NAME	PORT NAME	DESCRIPTION	I/O
1	CD MUTE	P41	Control Signal of Analogue Muting	O
2	P CONT	P40	Control Signal of Power Supply for CD Circuit	O
3	NC	P53	Not Used (Open)	O
4	FC	P52	Function Control C Signal	O
5	FB	P51	Function Control B Signal	O
6	FA	P50	Function Control A Signal	O
7	RESET	RESET	System Reset	I
8	X2	XO	X'tal Out (4.19 MHz)	O
9	X1	XI	X'tal In (4.19 MHz)	I
10	V CHK	P63	Detection Signal of the Stoppage Failure of Electricity	I
11	V DEC O	P62	Detection Signal Out of Voltage Drop	O
12	V DEC I	P61	Detection Signal In of Voltage Drop	I
13	TU MUTE	P60	Control Signal of Tuner Muting	O
14	NC	P73	Not Used (Ground)	I
15	NC	P72	Not Used (Ground)	I
16	DUB IN	P71	Dubbing Signal	I
17	TA AF	P70	Function Signal for Tape Deck	I
18	NC	P83	Not Used (Open)	O
19	NC	P82	Not Used (Open)	O
20	CLV GAIN	P81	Select Signal for CLV (Constant Linear Velocity) Gain	O
21	AMP SO	P80	Data Out to AD Micro Processor (µPD75512)	O
22	AMP SCK	P93	Clock Out to AD Micro Processor (µPD75512)	O
23	TRAY LED	P92	CD Tray Indicator LED	O
24	SUB SO	P91	Data Out to Sub Micro Processor (µPD73508)	O
25	SUB SCK	P90	Clock Out to Sub Micro Processor (µPD73508)	O
26	VSS	VSS	Ground	
27	SUB BUSY	P13/INT3	Busy Signal In from Sub Micro Processor (µPD73508)	I
28	AMP BUSY	P12/INT2	Busy Signal In from AD Micro Processor (µPD75512)	I
29	WRQ	P11/INT1	DSP (Digital Signal Processor) Interface [Sub Q Request]	I
30	IR	P10/INT0	Infrared Ray Receiving (Remocon) Signal	I
31	KEY3	PTH03	Key Input Signal	I
32	KEY2	PTH02	Key Input Signal	I
33	KEY1	PTH01	Key Input Signal	I
34	KEY0	PTH00	Key Input Signal	I
35	NC	TI0	Not Used (Open)	
36	NC	TI1	Not Used (Open)	
37	CLOSE	P23	Control Signal of Tray Close	O
38	CLK OUT	P22/PCL	Clock Signal for Adjustment	O
39	OPEN	P21/PT01	Control Signal of Tray Open	O
40	RWC	P20/PT00	DSP (Digital Signal Processor) Interface [Command Latch]	O
41	SQOUT	P03/SI	DSP (Digital Signal Processor) Interface [Sub Q Data]	I
42	COIN	P02/SO	DSP (Digital Signal Processor) Interface [Command Data]	O
43	CQCK	P01/SCK	DSP (Digital Signal Processor) Interface [Clock]	O
44	DRF	P00/INT4	DRF Signal	I
45	OPN SW	P123	Switch Detection Signal for Open End of CD Tray	I
46	LIM SW	P122	Switch Detection Signal for Limit of Pickup	I
47	NC	P121	Not Used (Ground)	I
48	NC	P120	Not Used (Ground)	I
49	NC	P133	Not Used (Ground)	I
50	NC	P132	Not Used (Ground)	I
51	SW PRE	P131	Select Signal from ON/OFF Switch for Pre Muting	I
52	SW HI AC	P130	Select Signal from ON/OFF Switch for High Speed Access	I
53	SW DAC	P143	Select Signal from ON/OFF Switch for DAC (Digital to Analogue Converter)	I
54	SW BAND	P142	Select Signal from TU/BAND or FM Switch for Remocon Function	I
55	SW PST	P141	Select Signal from PST UP or SCAN Switch for Remocon Function	I
56	SW S D	P140	Select Signal from S/D Series Switch	I
57	NC	NC	Not Connection	
58	VDD	VDD	Power Supply +5V	
59	PULL UP	P33	Power supply to Pull Up Resistors	O
60	NC	P32	Not Used (Open)	O
61	DSP RES	P31	Reset Control Signal for DSP (Digital Signal Processor)	O
62	ATT	P30	DAC (Digital to Analogue Converter) Interface [Data]	O
63	SHIFT	P43	DAC (Digital to Analogue Converter) Interface [Clock]	O
64	LATCH	P42	DAC (Digital to Analogue Converter) Interface [Latch]	O

IC BLOCK DIAGRAM (CD)

IC104 LC7866E (Digital Signal Processor)

No	PIN NAME	I/O	DESCRIPTION
1	TEST1	I	For TEST. Normal time is non connection.
2	AO	O	Input from VCO output in LA9210 (8.6436MHz) Phase comparison output of VCO and EFM signal.
3	AI	I	
4	PDO	O	
5	VSS		GND
6	$\overline{\text{EFMO}}$	O	Negative output through amplitude limiter. Antiphase of EFMO. This signal use SLICE LEVEL CONTROL.
7	EFMO	O	Positive output through amplitude limiter. Antiphase of EFMO. This signal use SLICE LEVEL CONTROL.
8	EFMIN	I	Inputting HF signal of 1~2Vp-p. This signal use SLICE LEVEL CONTROL.
9	TEST2	I	For TEST. Normal time is non connection.
10	CLV+	O	Output for DISC MOTOR CONTROL.
11	CLV-	O	Output for DISC MOTOR CONTROL.
12	V/P	O	CLV rough Servo time : Output "H" Phase control time : Output "L"
13	FOCS	O	Output "H" : Lens pull up with slowly than stop the Focus Servo. If FZD generate, it reset output of FOCS. For lead-in of Focus
14	$\overline{\text{FST}}$	O	
15	FZD	I	
16	HFL	I	Comply with command of track jump, it oscillate kick Pulse, JP+ & JP-. It jump the prescribed number of track (1,4,16,64).
17	TES	I	Comply with command of track jump, it oscillate kick Pulse, JP+ & JP-. It jump the prescribed number of track (1,4,16,64).
18	PCK	O	PCK Monitor (4.3218MHz)
19	FSEQ	O	SYNC (FS of truth) detected from EFM signal = SYNC of counter : "H" (Latch Output during in 1 frame)
20	TOFF	O	Comply with command of track jump, it oscillate kick Pulse, JP+ & JP-. It jump the prescribed number of track (1,4,16,64).
21	TGL	O	
22	THLD	O	
23	TEST3	I	For TEST. Normal time is non connection.
24	VDD		+5V
25	JP+	O	Comply with command of track jump, it oscillate kick Pulse, JP+ & JP-. It jump the prescribed number of track (1,4,16,64).
26	JP-	O	
27	DEMO	I	For adjustment of production process. Sound on function.
28	TEST4	I	For TEST. Normal time is non connection.
29	EMPH	O	Output is "H" time, it need de-emphasis
30	TESTA	I	For TEST. Normal time is "H".

No	PIN NAME	I/O	DESCRIPTION
31	SMP2	O	Output of signal to DAC, Signal of Latch & L/R select, Signal for Sampling Hold
32	SMP1	O	
33	LRCLK	O	Output of signal to DAC, Signal of Latch & L/R select, Signal for Sampling Hold
34	SMP	O	
35	DFOUT	O	Output of signal to DAC, Signal of Latch & L/R select, Signal for Sampling Hold
36	DACLK	O	Output of signal to DAC, Signal of Latch & L/R select, Signal for Sampling Hold
37	TESTB	O	For TEST. Normal time is non connection.
38	TESTC	O	For TEST. Normal time is non connection.
39	CK2	O	For output of signal that Comply with CD-ROM
40	ROMOUT	O	For output of signal that Comply with CD-ROM
41	C2FLCK	O	For output of signal that Comply with CD-ROM
42	C2F	O	For output of signal that Comply with CD-ROM
43	DOUT	O	Output of DIGITAL OUT
44	SBSY	O	Synchronizing signal of sub-code block.
45	EFLG	O	For correction monitor of C1, C2, single, double.
46	PW	O	SFSY is Synchronizing signal of sub-code & frame. Clock of eighth send to SBCK then read out the sub-code of P, Q, R, S, T, U, V, & W.
47	SFSY	O	
48	SBCK	I	
49	FSX	O	Output of Synchronizing signal (7.35KHz)
50	WRQ	O	Data sub-code Q pass the CRC check then WRQ do "H". It detect at external, Data read out from SQOUT by send the CQCK. RWC set the "H" by Micro Processor then it let command by send with Synchronizing CQCK command data.
51	RWC	I	
52	SQOUT	O	
53	$\overline{\text{COIN}}$	I	
54	$\overline{\text{CQCK}}$	I	
55	RES	I	Turn on the Power Supply time : Once "L"
56	M/L	I	Data of SQOUT want at the LBS first time : M/L set the "L".
57	$\overline{\text{LASER}}$	O	This output can control at Serial Control from Micro Processor
58	16M	O	16M Output (16.9344MHz)
59	4M	O	4M Output (4.2336MHz)
60	CONT	O	This output can control at Serial Control from Micro Processor
61	TEST5	I	For TEST. Normal time is non connection.
62	CS	I	Chip select Terminal. This terminal "L" : LC7866 is active (Internal Resistor : Pull Down)
63	XIN	I	Connection Terminal of crystal oscillation (16.9344MHz)
64	XOUT	O	Connection Terminal of crystal oscillation (16.9344MHz)

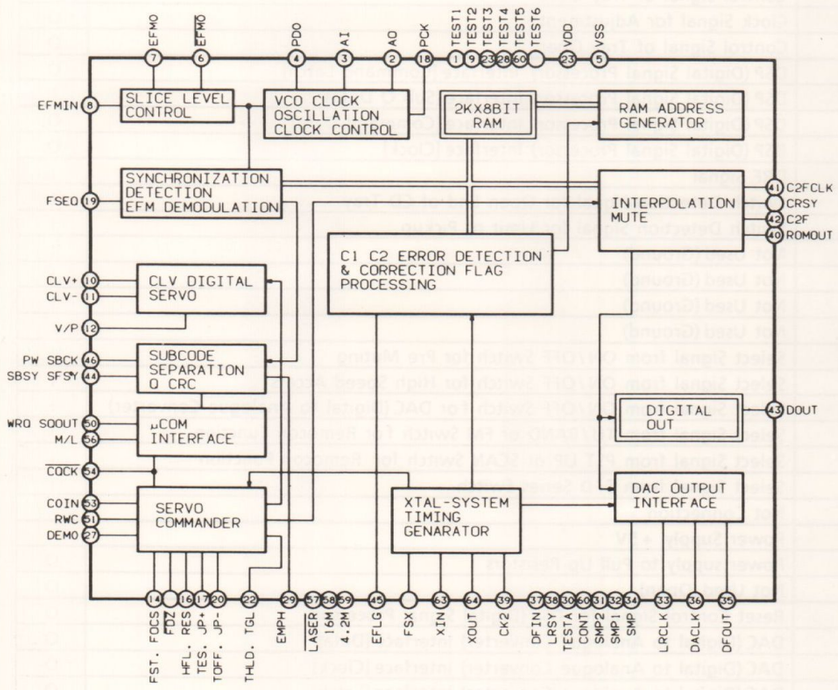

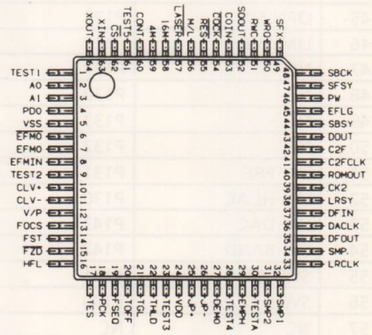

IC BLOCK DIAGRAM (CD)

IC105 SM5870DS (D/A Converter)

No.	PIN NAME	I/O	FUNCTION
1	XTO	O	Output Terminal of Oscillation
2	XVSS		GND Terminal of Crystal Route (0V)
3	CKSLN	I	Frequency Select of XTI, CKO
4	CKO	O	Oscillation Part, Output of Clock
5	TSTN	I	Test Terminal H = Normal, L = Test Mode
6	NODN	I	ATTN / MODN: H: H = Release, L = Soft Mute; L: H = Soft Mute, L = Soft Mute Hold
7	ATTN	I	
8	LRCI	I	Sample rate (fs) Clock of Input Data H = L-ch L = R-ch
10	DIN	I	Bit Clock of Input Data
11	DFS1	I	DSF2 / DSF1: L: L = De-Emphasis On 44.1kHz, H = De-Emphasis Off; H: L = De-Emphasis On 48.0kHz, H = De-Emphasis On 32.0kHz
12	DFS2	I	

No.	PIN NAME	I/O	FUNCTION
13	MOTEO	O	Output of nfinity Zero Detector
14	RSTN	I	System Reset H = Normal, L = Reset
15	DVSS		Digital GND Terminal (0V)
16	DVDD		Digital VDD Terminal (5V)
17	AVDD1		Analog VDD Terminal 1 (5V)
18	LO	O	PWM Output of L-channel (+)
19	AVSS1		Analog GND Terminal 1 (0V)
20	LON	O	PWM Output of L-channel (-)
21	AVDD2		Analog VDD Terminal 2 (5V)
22	AVDD3		Analog VDD Terminal 3 (5V)
23	RON	O	PWM Output of R-channel (-)
24	AVSS2		Analog GND Terminal 2 (0V)
25	RO	O	PWM Output of R-channel (+)
26	AVDD		Analog VDD Terminal 4 (5V)
27	XVDD		VDD Terminal of Crystal Route (5V)
28	XTI	I	Input Terminal of Oscillation

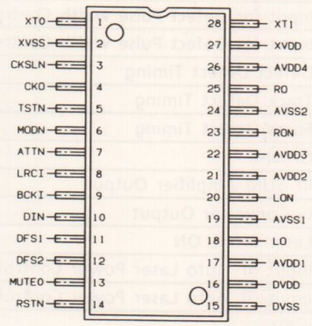

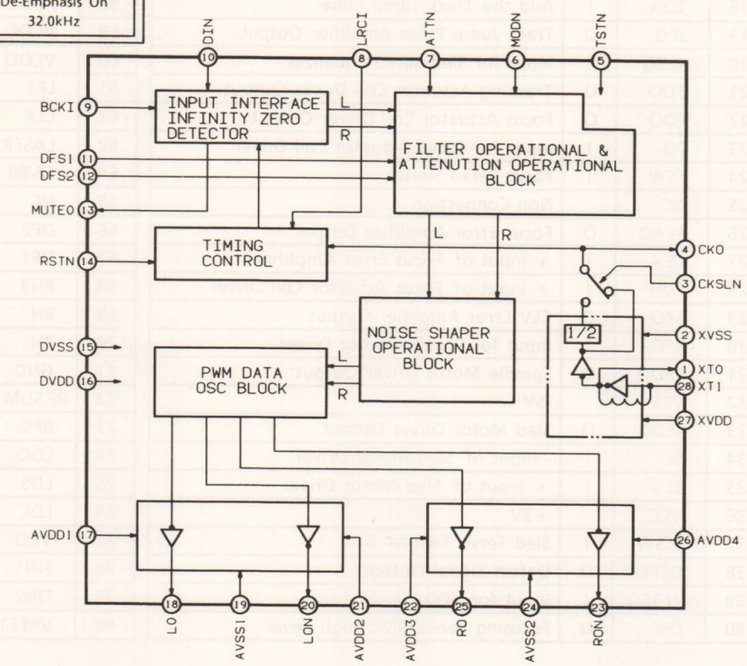

IC106 XRA15218F (Dual Operational Amplifier)

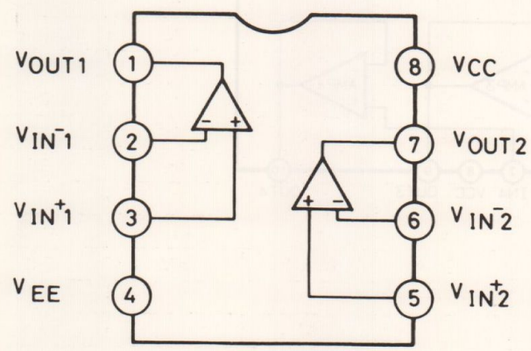

IC BLOCK DIAGRAM (CD & TUNER)

IC107 M5278D05 (3-Terminal Voltage Regulator)

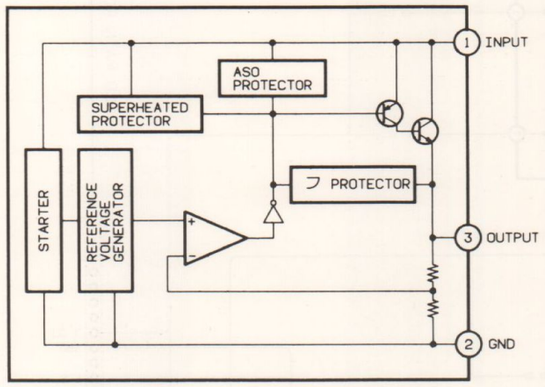

IC108 NJM79L05A (3-Terminal Voltage Regulator)

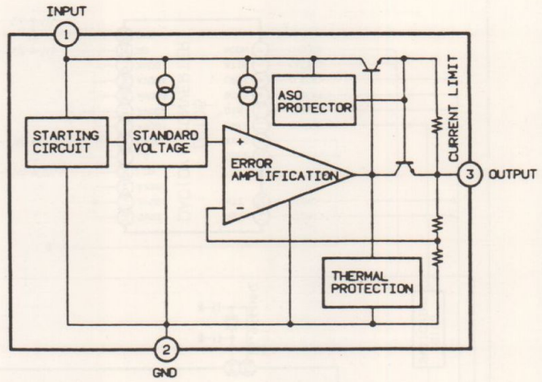

IC109 NJM78L05A (3-Terminal Voltage Regulator)

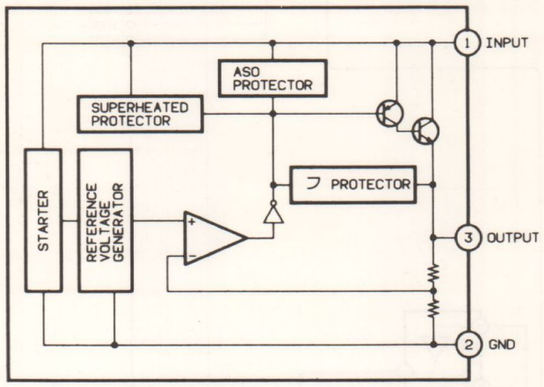

IC201 LA1265-AUD (Tuner IF System)

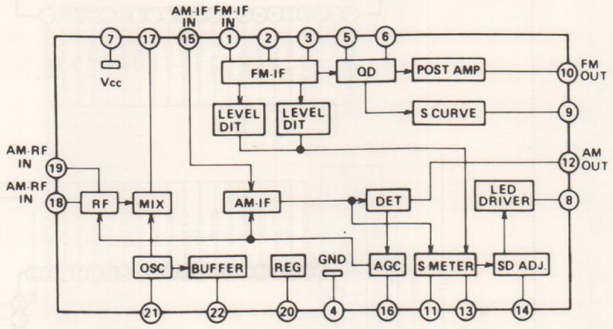

IC202 LA3361 (FM PLL MPX. Stereo Demodulator)

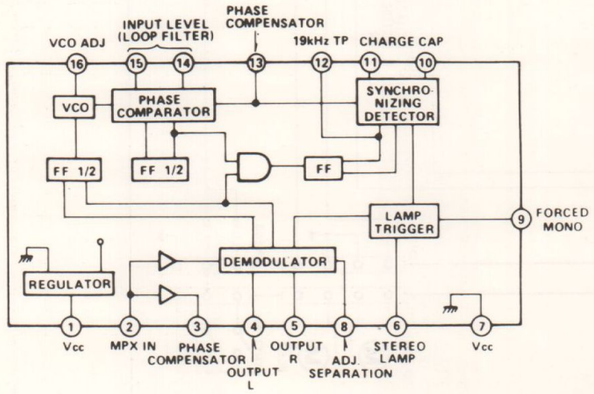

IC203 LM7001 (PLL Frequency Synthesizer)

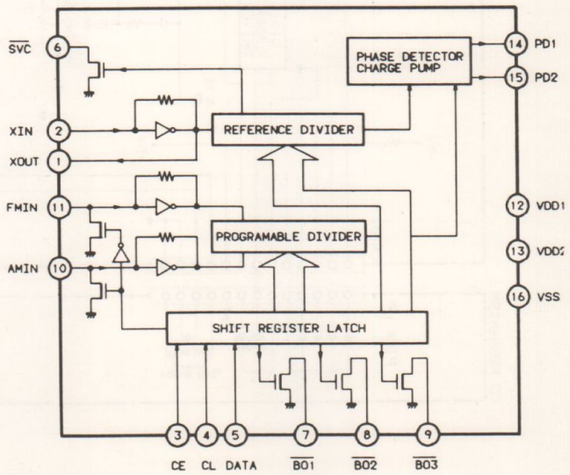

IC BLOCK DIAGRAM (FRONT)

IC251 μPD75306GF-225-3B9 (Micro Processor)

PIN No.	SIGNAL NAME	PORT NAME	DESCRIPTION	I/O	CONNECT
1	SEG12	S12	Segment of Liquid Crystal Display		LCD
2	SEG13	S13	Segment of Liquid Crystal Display		LCD
3	SEG14	S14	Segment of Liquid Crystal Display		LCD
4	SEG15	S15	Segment of Liquid Crystal Display		LCD
5	SEG16	S16	Segment of Liquid Crystal Display		LCD
6	SEG17	S17	Segment of Liquid Crystal Display		LCD
7	SEG18	S18	Segment of Liquid Crystal Display		LCD
8	SEG19	S19	Segment of Liquid Crystal Display		LCD
9	SEG20	S20	Segment of Liquid Crystal Display		LCD
10	SEG21	S21	Segment of Liquid Crystal Display		LCD
11	SEG22	S22	Segment of Liquid Crystal Display		LCD
12	SEG23	S23	Segment of Liquid Crystal Display		LCD
13	SEG24	S24 / BP0	Segment of Liquid Crystal Display		LCD
14	SEG25	S25 / BP1	Segment of Liquid Crystal Display		LCD
15	SEG26	S26 / BP2	Segment of Liquid Crystal Display		LCD
16	SEG27	S27 / BP3	Segment of Liquid Crystal Display		LCD
17	AUTO	S28 / BP4	Auto Tuning Signal ACTIVE : HIGH LEVEL	O	TUNER
18	NC	S29 / BP5	Not Used (Open)	O	OPEN
19	NC	S30 / BP6	Not Used (Open)	O	OPEN
20	NC	S31 / BP7	Not Used (Open)	O	OPEN
21	COM 0	COM0	Common of Liquid Crystal Display		LCD
22	COM 1	COM1	Common of Liquid Crystal Display		LCD
23	COM 2	COM2	Common of Liquid Crystal Display		LCD
24	COM 3	COM3	Common of Liquid Crystal Display		LCD
25	BIAS	BIAS	Bias of Liquid Crystal Display		
26	VLC0	V_{LC0}	Power Supply for Drive of Liquid Crystal Display		
27	VLC1	V_{LC1}	Power Supply for Drive of Liquid Crystal Display		
28	VLC2	V_{LC2}	Power Supply for Drive of Liquid Crystal Display		
29	STEP	P40	AM Step Selection 9kHz (V_{DD}) / 10kHz (V_{SS})	I	TUNER
30	ST	P41	ST Signal ACTIVE : LOW LEVEL	I	TUNER
31	SD	P42	SD Signal ACTIVE : LOW LEVEL	I	TUNER
32	NC	P43	Not Used (Ground)	I	V_{SS}
33	VSS	V_{SS}	Ground		
34	CE (S)	P50	Data Signal from LM7001 (For S Series)	O	TUNER
35	CLK (S)	P51	Data Signal from LM7001 (For S Series)	O	TUNER
36	DO (S)	P52	Data Signal from LM7001 (For S Series)	O	TUNER
37	MONO (S)	P53	Compulsion Monaural (For S Series) ACTIVE : HIGH LEVEL	O	TUNER
38	NC	P00 / INT4	Not Used (Ground)	I	V_{SS}
39	SCK	P01 / SCK	Clock Signal In from Main Micro Processor (μPD65117)	I	MAIN μCON
40	NC	P02 / SO / SB0	Not Used (Ground)		V_{SS}
41	SI	P03 / SI / SB1	Data In from Main Micro Processor (μPD65117)	I	MAIN μCON
42	NC	P10 / INT0	Not Used (Ground)	I	V_{SS}
43	NC	P11 / INT1	Not Used (Ground)	I	V_{SS}
44	NC	P12 / INT2	Not Used (Ground)	I	V_{SS}
45	NC	P13 / T10	Not Used (Ground)	I	V_{SS}
46	WIDE	P20 / PT100	Select Signal for AM Signal Type Wide (HIGH) / Narrow (LOW)	O	TUNER
47	PCON (S)	P21	Tuner Power Signal (For S Series) ACTIVE : HIGH LEVEL	O	TUNER
48	MUTE	P22 / PCL	Tuner Mute Signal ACTIVE : HIGH LEVEL	O	TUNER
49	BUSY	P23 / BUZ	Busy Signal Out to Main Micro Processor (μPD65117)	O	MAIN μCON
49	BUSY	P23 / BUZ	Busy Signal Out to Main Micro Processor (μPD65117)	O	MAIN μCON
50	S0	P30 / LCDCL	Initial Set for User = Country (Open or Ground)	I	
51	S1	P31 / SYNC	Initial Set for User = Country (Open or Ground)	I	
52	S2	P32	Initial Set for User = Country (Open or Ground)	I	
53	S3 (FM MUTE)	P33	Select Signal for FM Auto Mute SET (Open) / NOT (V_{SS})	I	
54	VDD	V_{DD}	Power Supply +5V		V_{DD}
55	NC	XT1	Not Used (Ground) OSC X'tal Terminal for Main Clock	I	V_{SS}
56	NC	XT2	Not Used (Open) OSC X'tal Terminal for Main Clock	O	
57	NC	NC	Non Connection		
58	X1	XI	X'tal In (4.194304 MHz)	I	
59	X2	XO	X'tal Out (4.194304 MHz)	O	
60	S4 (12H / 24H)	P60 / KR0	Select Signal for CLOCK 24H (Open) / 12H (V_{SS})	I	
61	S5 (AM IF)	P61 / KR1	Select Signal for AM IF SET (Open) / NOT (V_{SS})	I	TUNER
62	S6 (D / S)	P62 / KR2	Select Signal for D & S Series SET (Open) / NOT (V_{SS})	I	
48	MUTE	P22 / PCL	Tuner Mute Signal ACTIVE : HIGH LEVEL	O	TUNER
63	MONO (D)	P63 / KR3	Compulsion Monaural (For D Series) ACTIVE : HIGH LEVEL	O	TUNER
64	DO (D)	P70 / KR4	Data Signal from LM7001 (For D Series)	O	TUNER
65	CLK (D)	P71 / KR5	Data Signal from LM7001 (For D Series)	O	TUNER
66	CE (D)	P72 / KR6	Data Signal from LM7001 (For D Series)	O	TUNER
67	PCON (D)	P73 / KR7	Tuner Power Signal (For D Series) ACTIVE : HIGH LEVEL	O	TUNER
68	RESET	RESET	System Reset Signal		RESET CIRCUIT
69	SEG0	S0	Segment of Liquid Crystal Display		LCD
70	SEG1	S1	Segment of Liquid Crystal Display		LCD

PCS 67 726

IC BLOCK DIAGRAM (FRONT)

PIN No.	SIGNAL NAME	PORT NAME	DESCRIPTION	I/O	CONNECT
71	SEG2	S2	Segment of Liquid Crystal Display		LCD
72	SEG3	S3	Segment of Liquid Crystal Display		LCD
73	SEG4	S4	Segment of Liquid Crystal Display		LCD
74	SEG5	S5	Segment of Liquid Crystal Display		LCD
75	SEG6	S6	Segment of Liquid Crystal Display		LCD
76	SEG7	S7	Segment of Liquid Crystal Display		LCD
77	SEG8	S8	Segment of Liquid Crystal Display		LCD
78	SEG9	S9	Segment of Liquid Crystal Display		LCD
79	SEG10	S10	Segment of Liquid Crystal Display		LCD
80	SEG11	S11	Segment of Liquid Crystal Display		LCD

LCD (CT UNIT)

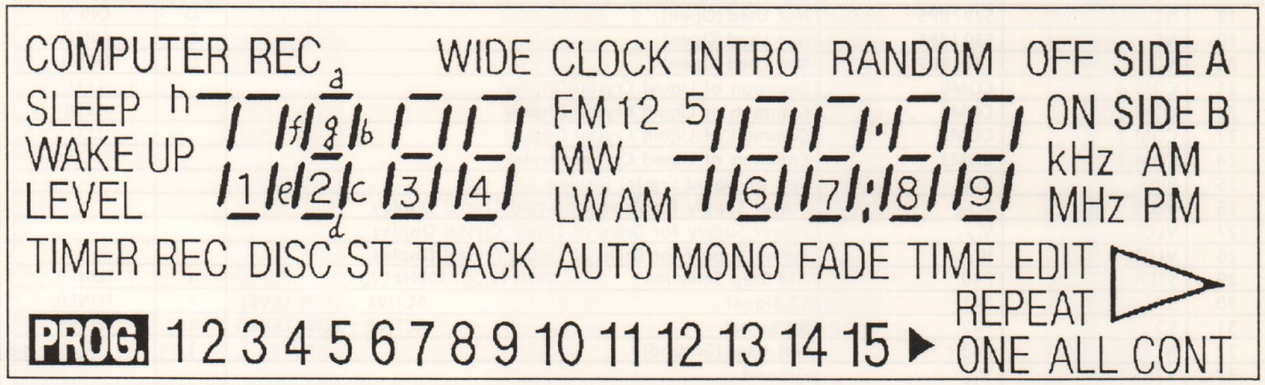

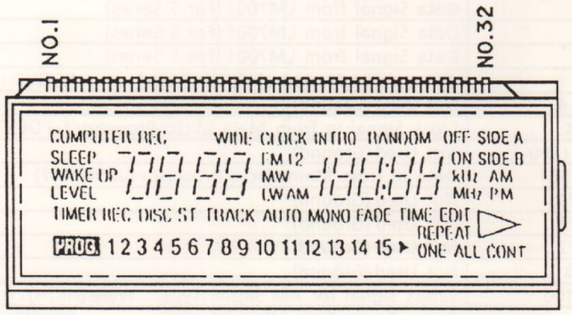

NO.	COM. 1	COM. 2	COM. 3	COM. 4	NO.	COM. 1	COM. 2	COM. 3	COM. 4
1	CONT	ALL	ONE	REPEAT	17	INTRO	5b.c	5g	
2	13	14	15	▶	18	6f	6g	6e	6d
3	12	11	10	9	19	6a	6b	6c	MONO
4	5	6	7	8	20	7f	7g	7e	7d
5	4	3	2	1	21	7a	7b	7c	FADE
6	SLEEP	WAKE UP	TIMER	REC	22	RANDM	:	.	TIME
7	COMP. REC	LEVEL	DISC	PROG.	23	8f	8g	8e	8d
8	1h	1a.e.f	1b.c	1d	24	8a	8b	8c	EDIT
9	2f	2g	2e	2d	25	9f	9g	9e	9d
10	2a	2b	2c	ST	26	9a	9b	9c	
11	3f	3g	3e	3d	27	OFF	ON	KHz	MHz
12	3a	3b	3c	TRACK	28	DISE A	DISE B	AM	PM
13	4f	4g	4e	4d	29	COM. 1			
14	4a	4b	4c	AUTO	30		COM. 2		
15	WIDE	FM	MW	LW	31			COM. 3	
16	CLOCK	1 (FM)	2 (FM)	AM	32				COM. 4

PCS 67 727

BLOCK DIAGRAM (CD)

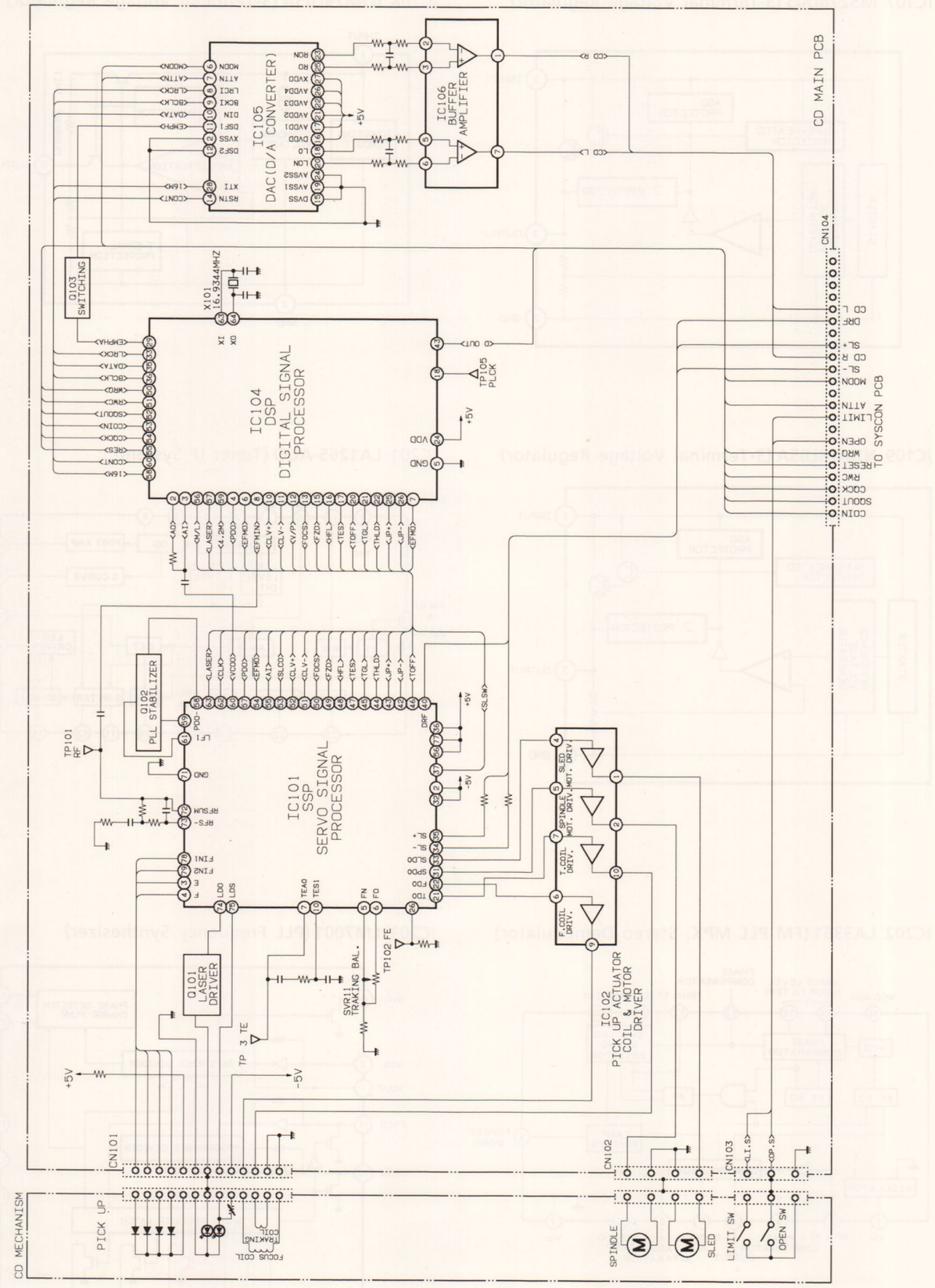

SCHEMATIC DIAGRAM (FRONT) — FOR 01B · 07B

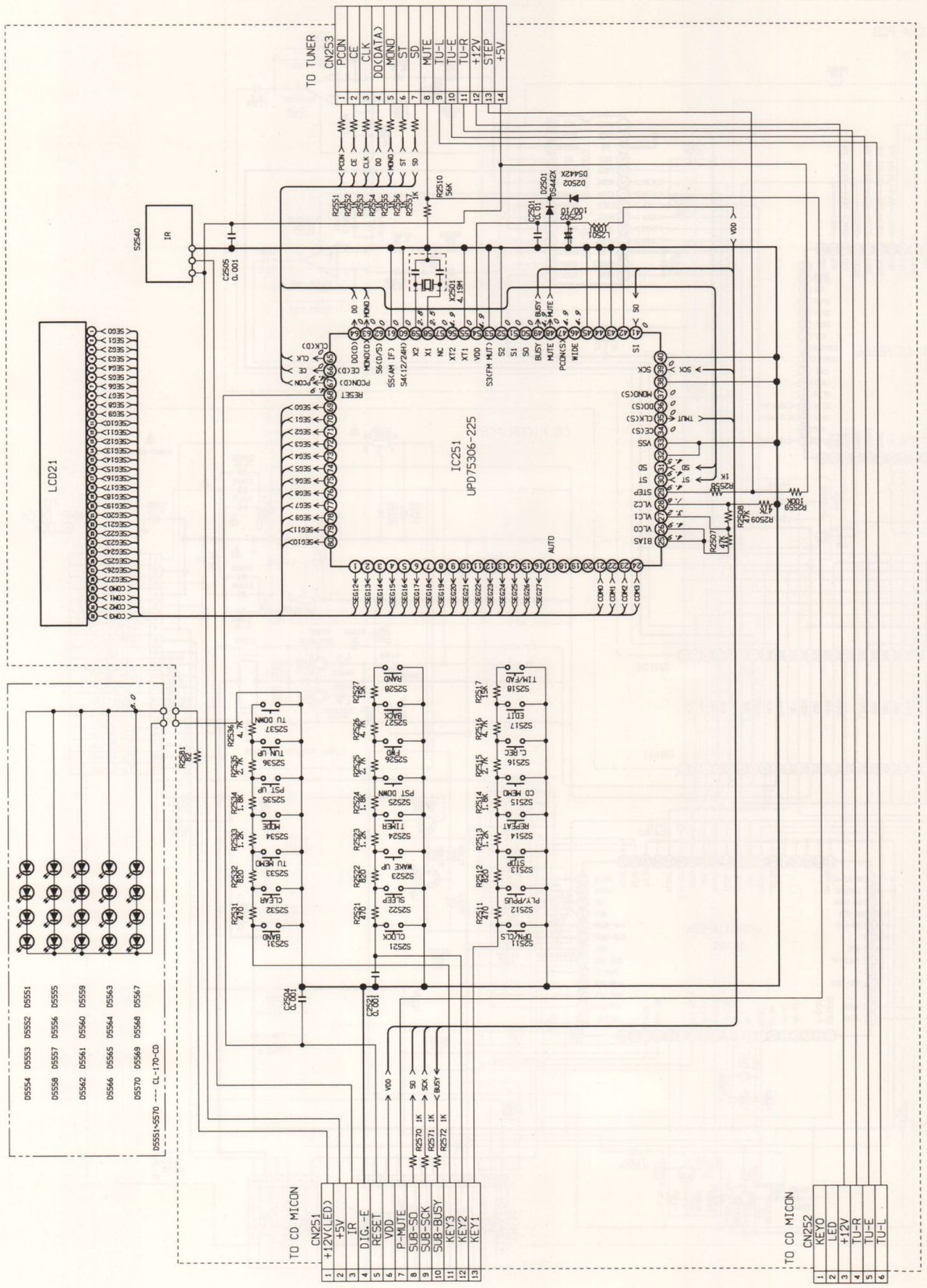

SCHEMATIC DIAGRAM (FRONT) — FOR 60B

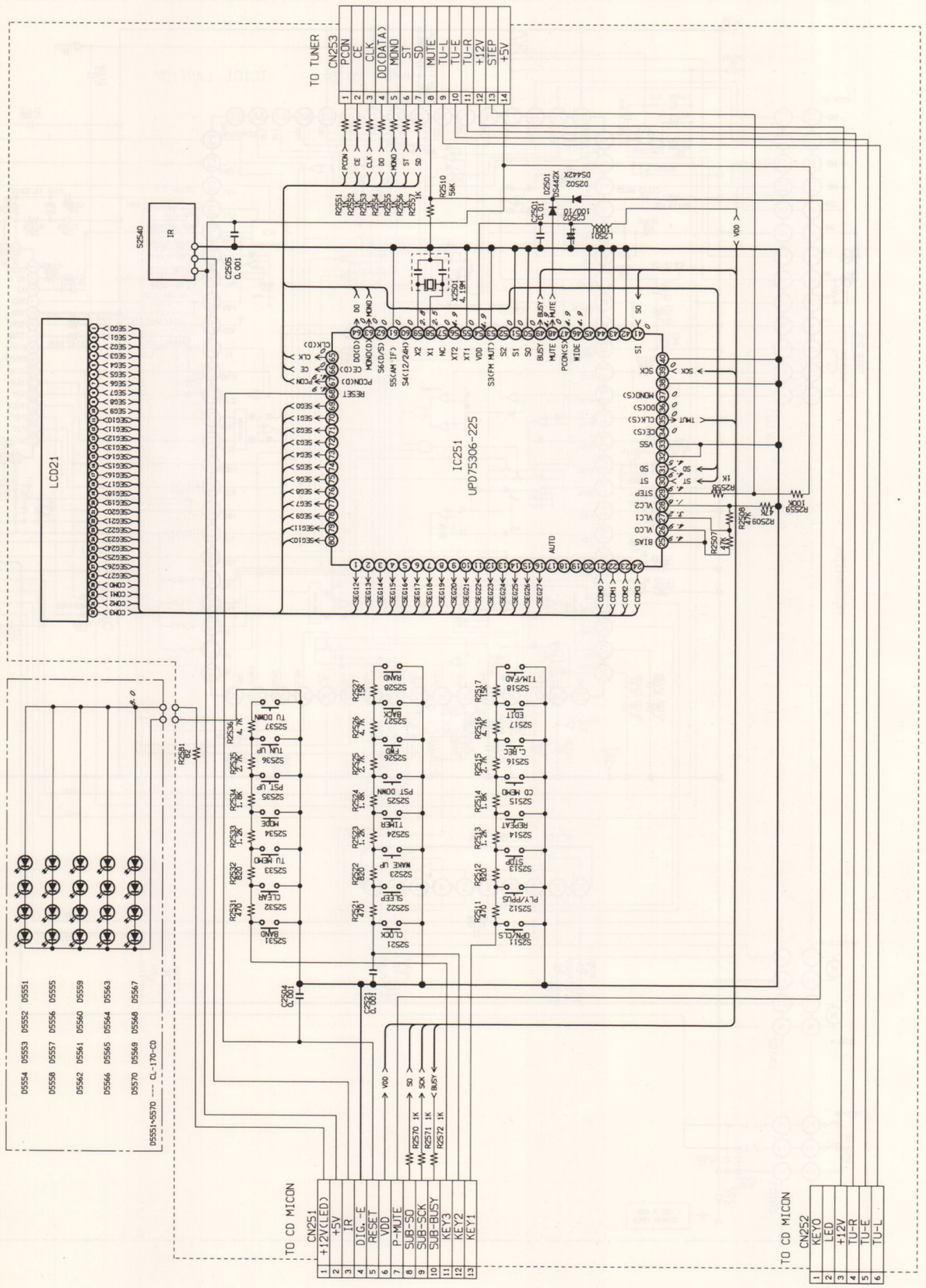

SCHEMATIC DIAGRAM (CD)

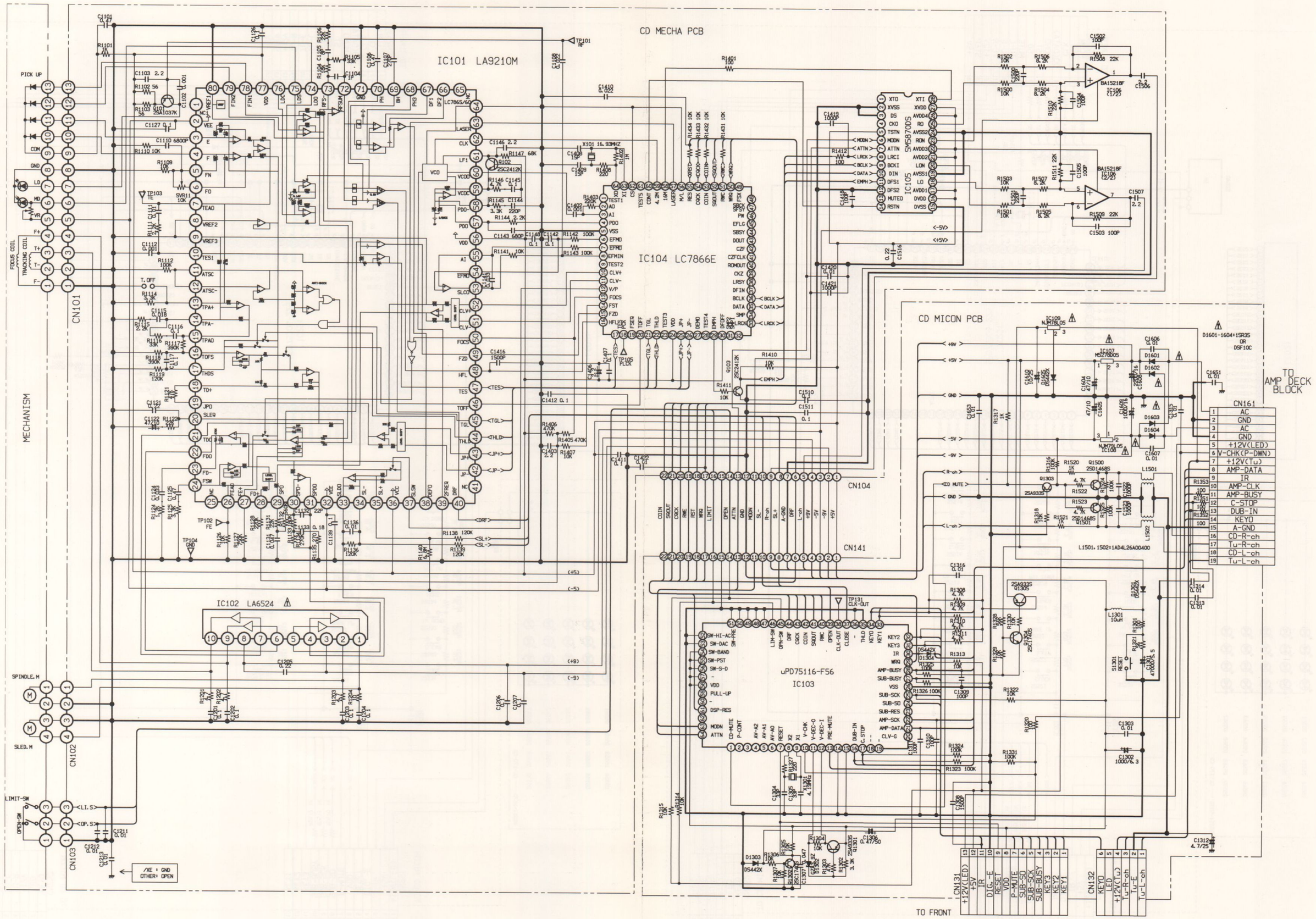

WIRING DIAGRAM (CD)

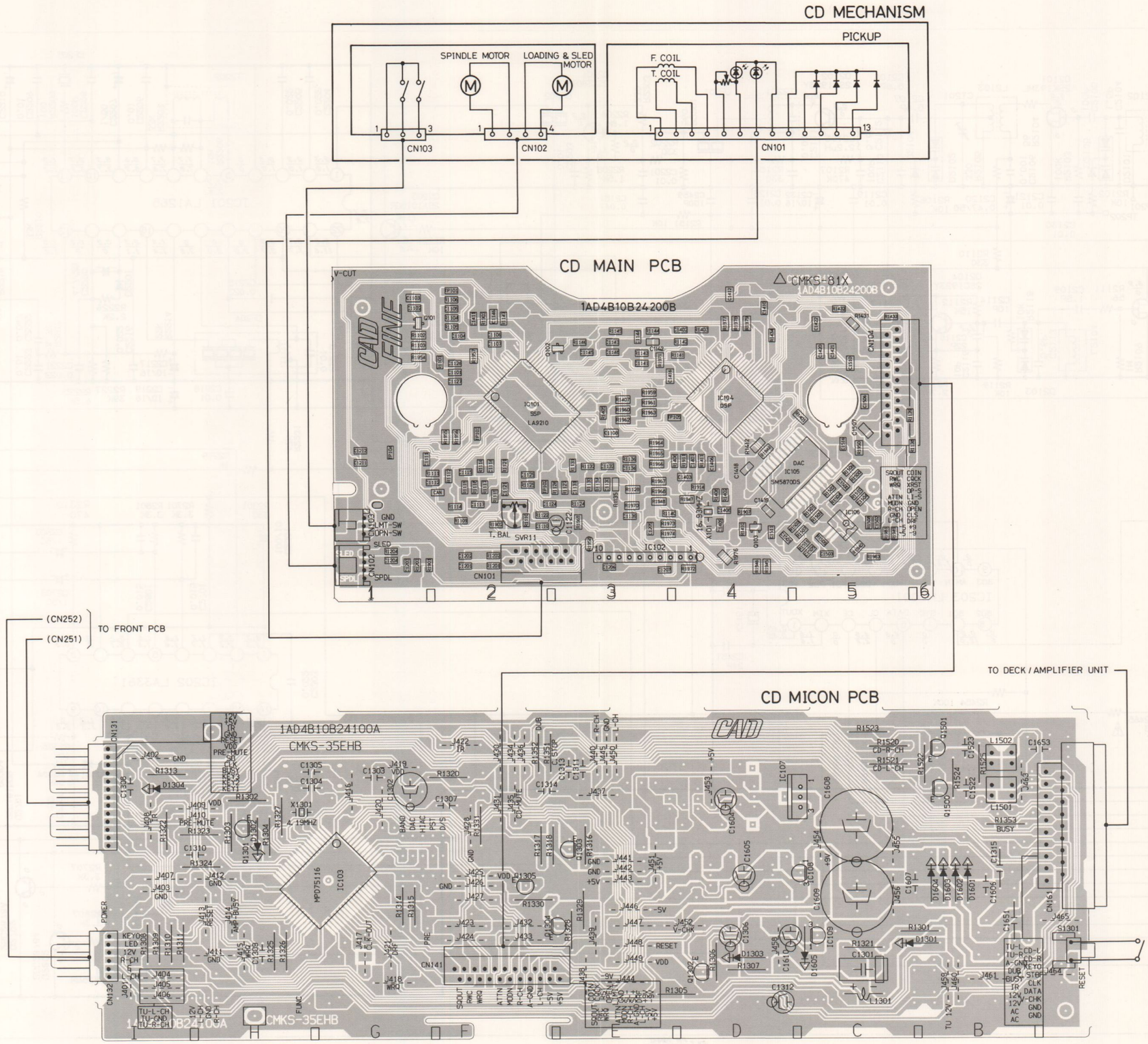

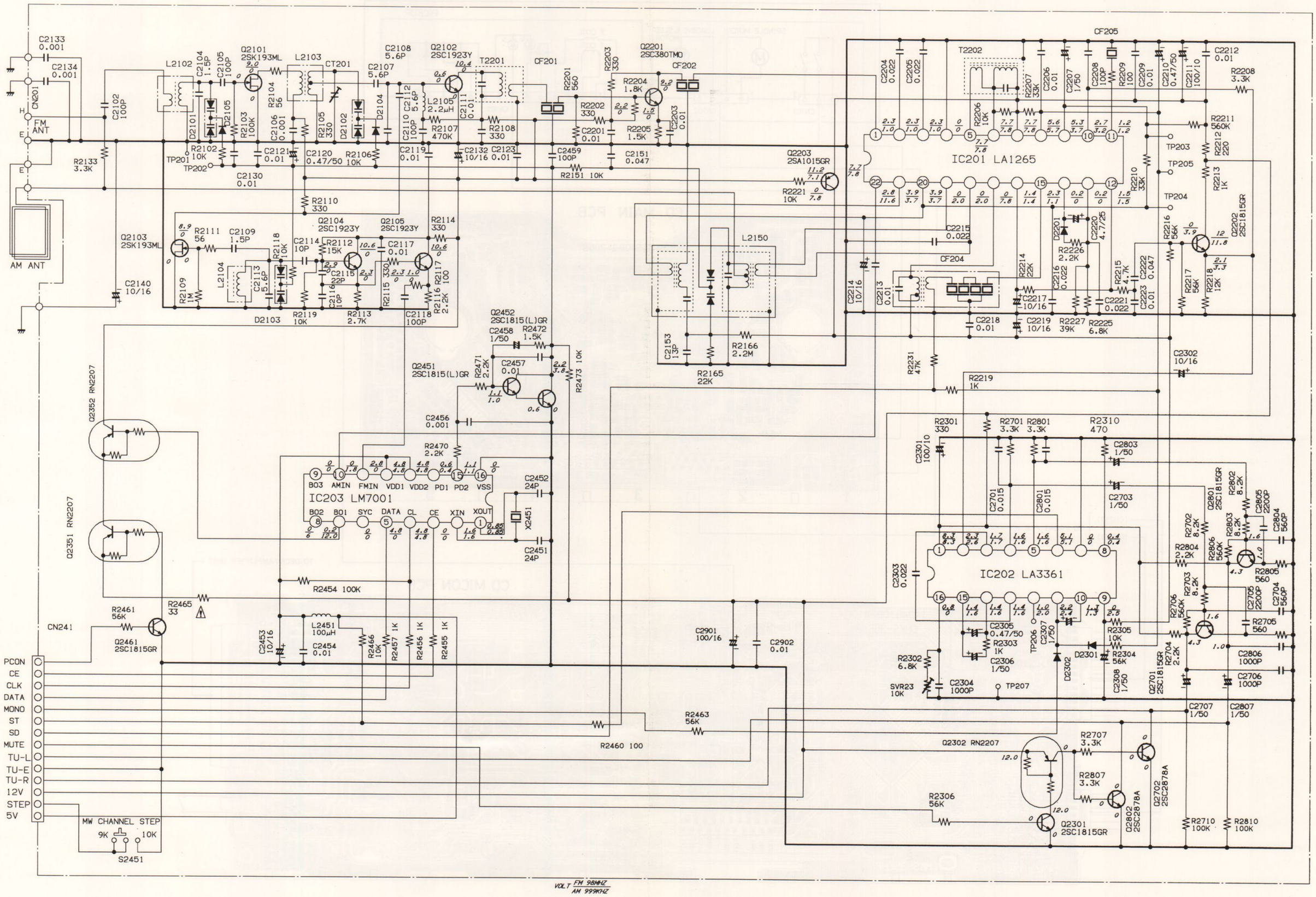

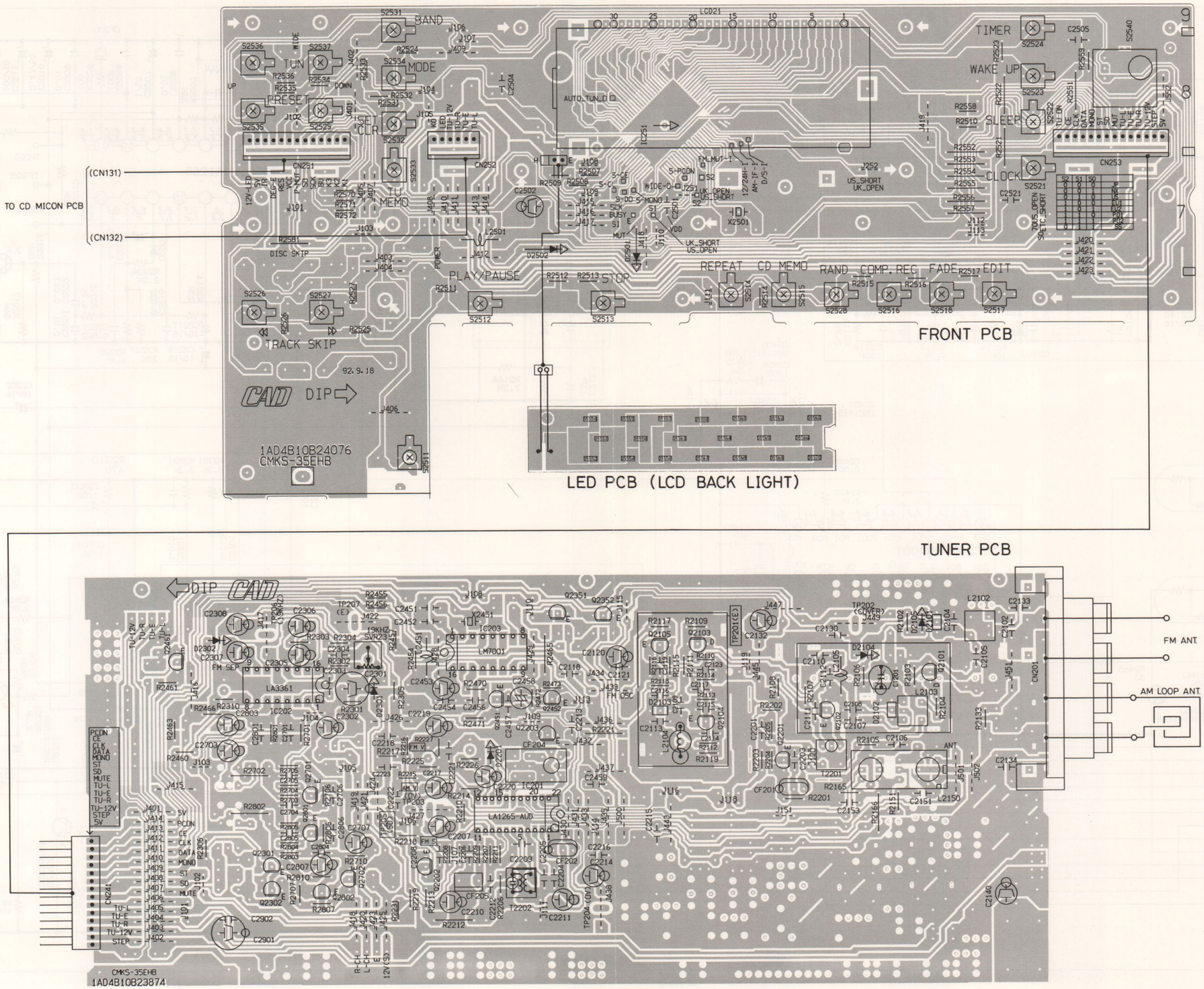

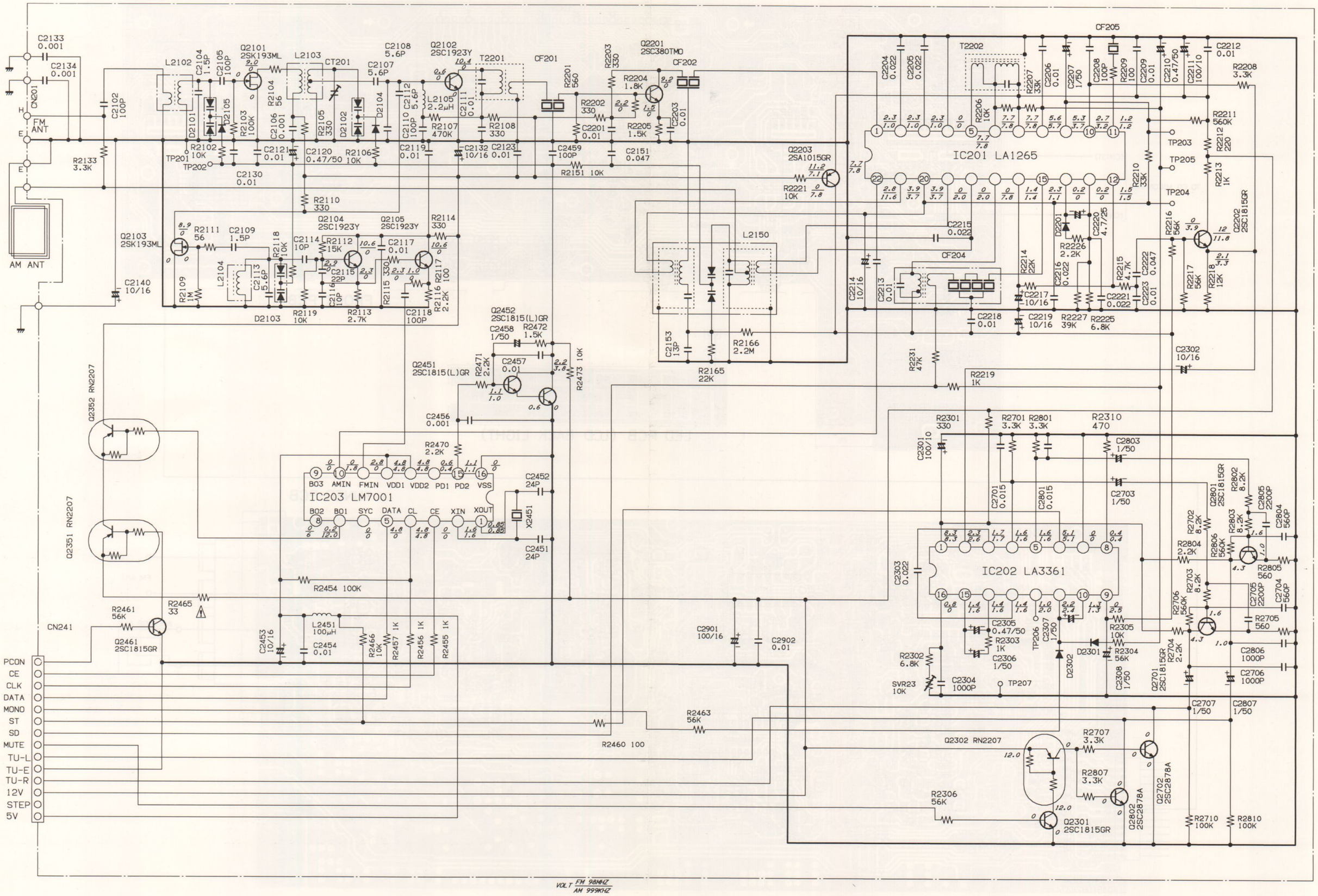

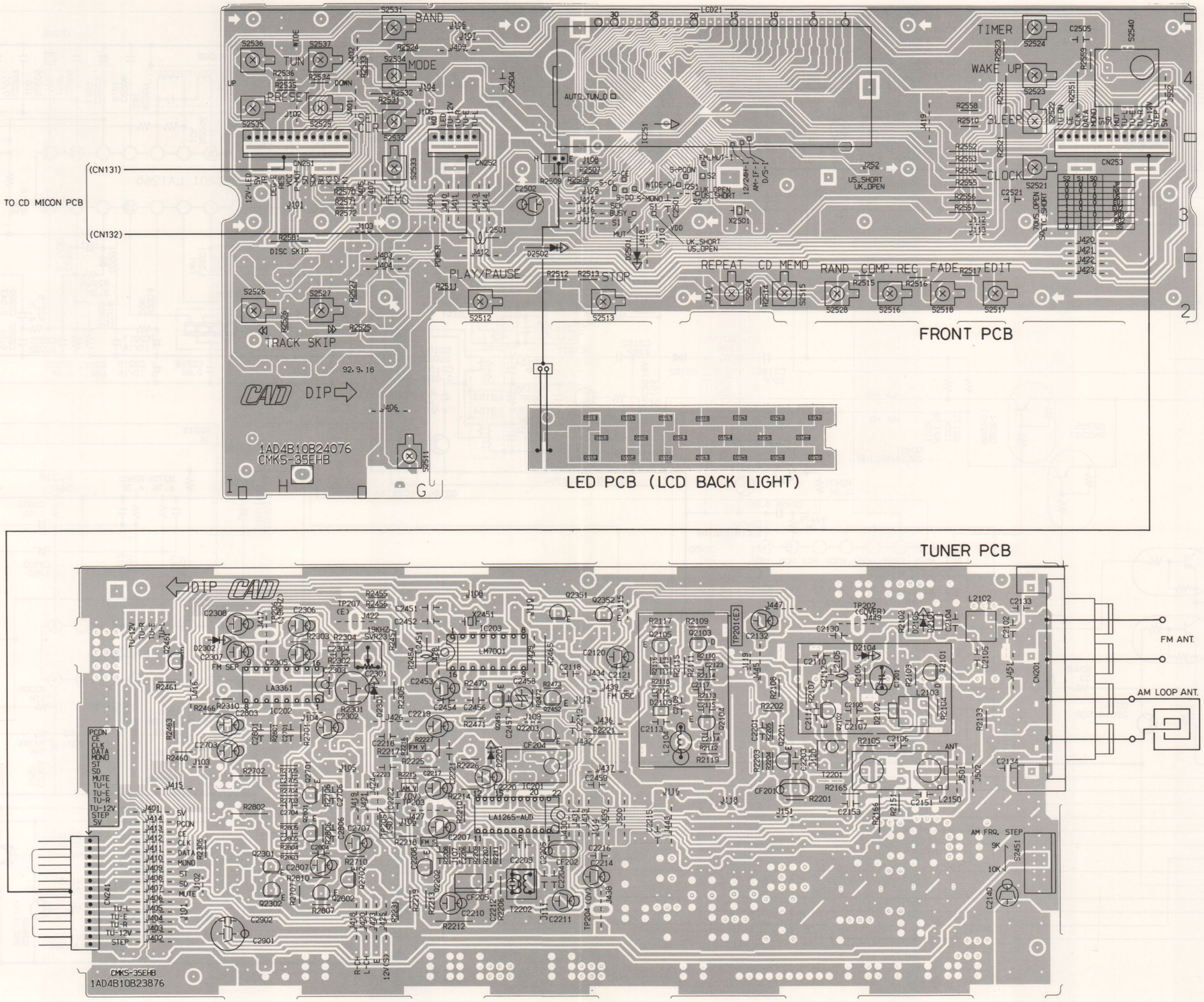

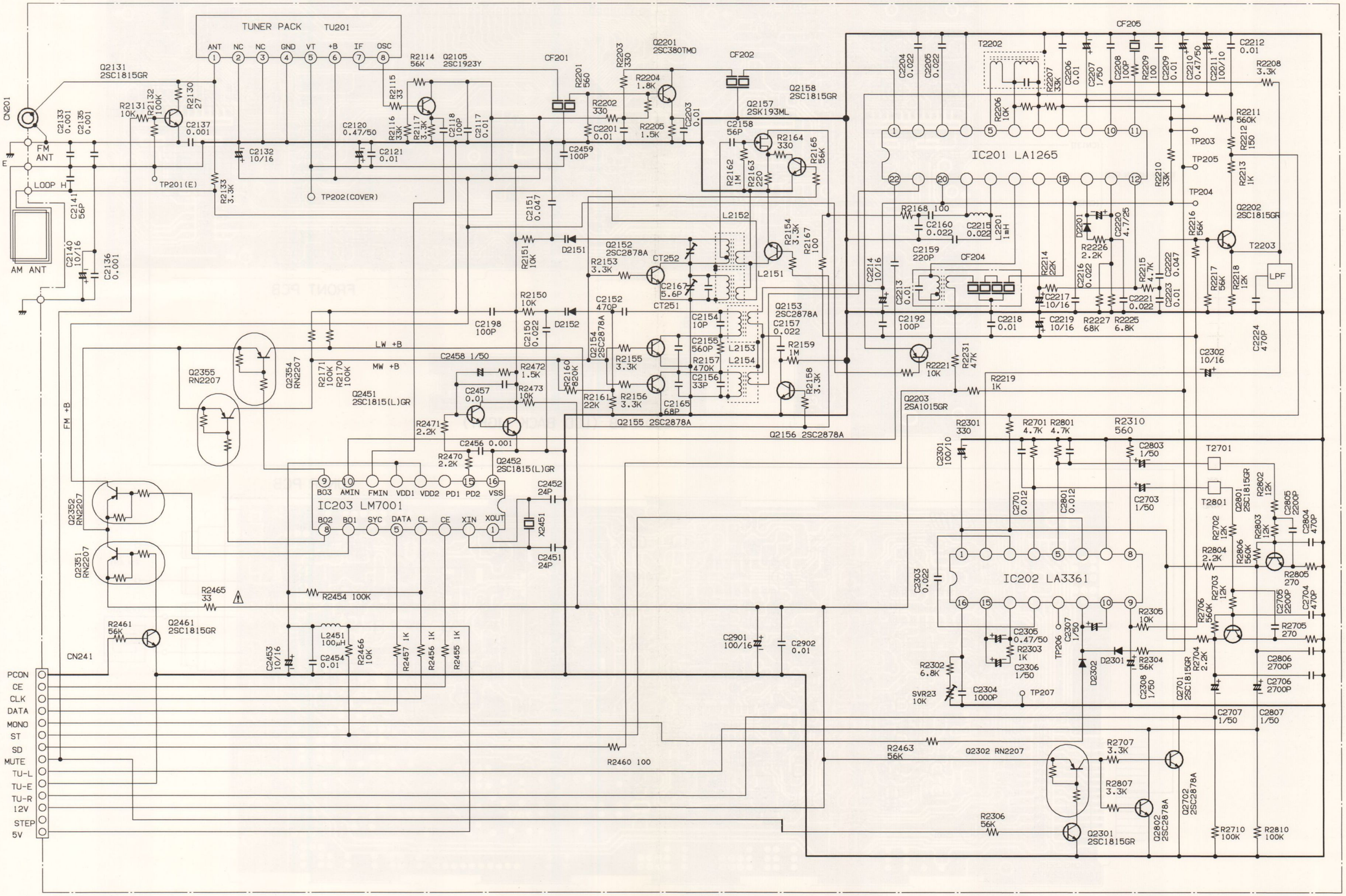

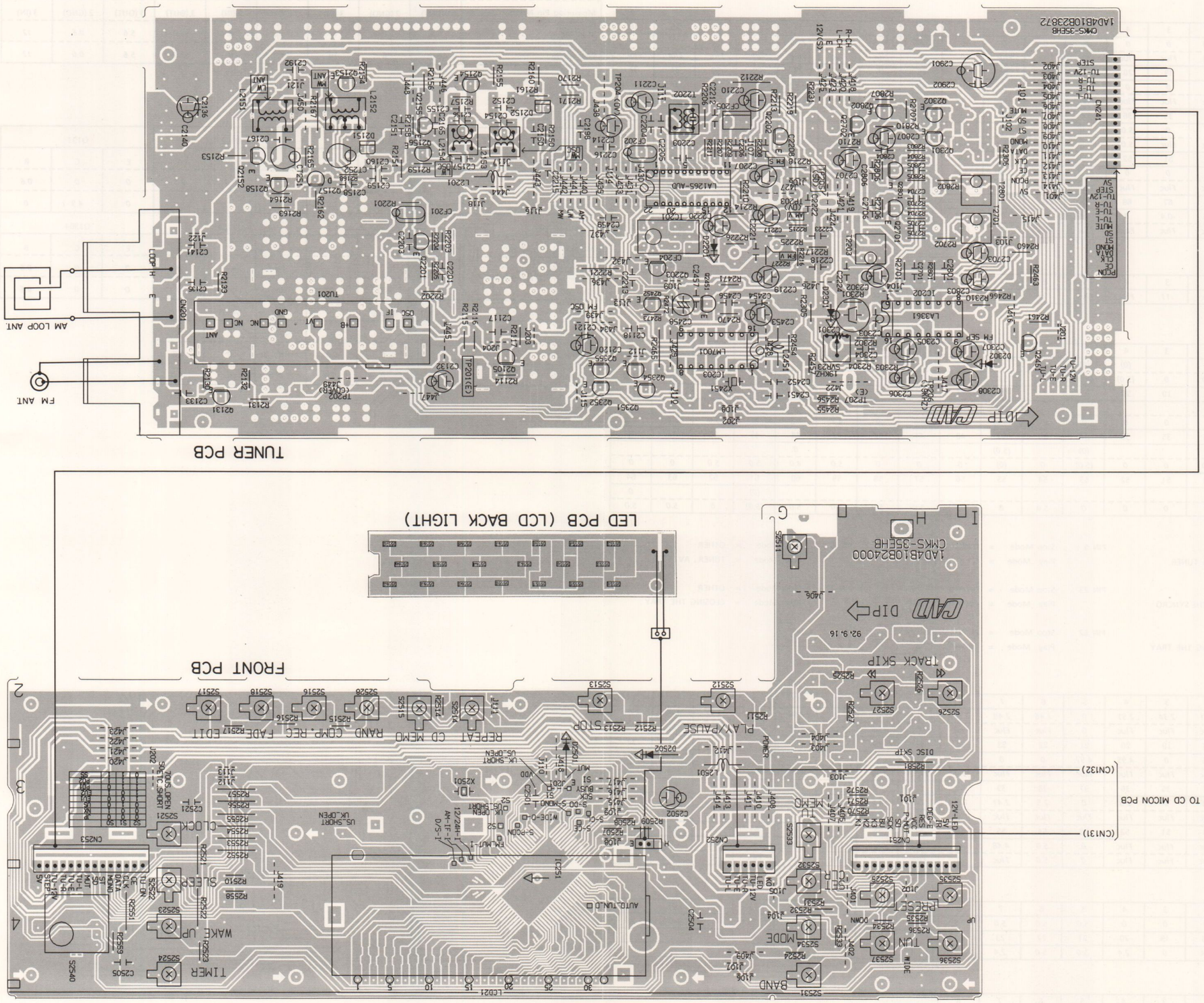

VOLTAGES OF IC (CD)

(Unit : Volt)

IC101 LA9210M

Measuring Pin No.	1	2	3	4	5	6	7	8	9	10	11	12	13	14	15	16
Stop Mode	0	-5.0	0	0	0	0	0	0	0	2.59	2.54	2.55	0	0	0	0
Play Mode	0	-5.0	Fluc	Fluc	Fluc	Fluc	Fluc	0	0	Fluc	Fluc	Fluc	Fluc	Fluc	Fluc	Fluc
Measuring Pin No.	17	18	19	20	21	22	23	24	25	26	27	28	29	30	31	32
Stop Mode	0	0	0	0	Fluc	Fluc	0	0	0	0	Fluc	2.43	0	0	0	-5.0
Play Mode	Fluc	Fluc	Fluc	Fluc	Fluc	Fluc	Fluc	Fluc	0	Fluc	Fluc	Fluc	Fluc	Fluc	Fluc	-5.0
Measuring Pin No.	33	34	35	36	37	38	39	40	41	42	43	44	45	46	47	48
Stop Mode	0	0	0	5.0	4.39	0	0	0	0	0	0	0	4.97	4.92	4.07	4.07
Play Mode	Fluc	Fluc	Fluc	5.0	Fluc	Fluc	Fluc	Fluc	0	Fluc	Fluc	Fluc	Fluc	Fluc	Fluc	Fluc
Measuring Pin No.	49	50	51	52	53	54	55	56	57	58	59	60	61	62	63	64
Stop Mode	4.07	0	0	0	2.52	2.49	2.50	5.0	2.51	2.51	2.54	3.92	2.60	2.33	4.92	0
Play Mode	Fluc	Fluc	Fluc	Fluc	Fluc	Fluc	Fluc	5.0	Fluc	Fluc	Fluc	Fluc	Fluc	Fluc	Fluc	0
Measuring Pin No.	65	66	67	68	69	70	71	72	73	74	75	76	77	78	79	80
Stop Mode	0	0.4	-0.4	0	-0.5	-0.5	0	-0.5	0	4.82	-4.97	4.83	5.0	0	0	0
Play Mode	0	Fluc	Fluc	Fluc	Fluc	Fluc	0	Fluc	Fluc	Fluc	Fluc	Fluc	5.0	Fluc	Fluc	0

IC102 LA6524

Fluc : Fluctuation

Measuring Pin No.	1	2	3	4	5	6	7	8	9	10
Play Mode	Fluc	Fluc	-11	Fluc	Fluc	Fluc	Fluc	10	Fluc	8.60

IC103 μPD75116

Measuring Pin No.	1	2	3	4	5	6	7	8	9	10	11	12	13	14	15	16
Stop Mode	0			(0)	(0)	(0)										(0)
Play Mode	4.8	5.0	0	(5.0)	(5.0)	(5.0)	5.0	2.5	2.5	4.7	5.0	5.0	0	0	0	(4.8)
Measuring Pin No.	17	18	19	20	21	22	23	24	25	26	27	28	29	30	31	32
Stop Mode							(0)	0								
Play Mode	0	0	0	0	0	5.0	(5.0)	Fluc	2.5	0	4.7	4.8	0	5.0	5.0	5.0
Measuring Pin No.	33	34	35	36	37	38	39	40	41	42	43	44	45	46	47	48
Stop Mode					(0)		(5.0)					0				
Play Mode	5.0	5.0	0	0	(5.0)	0	(0)	0	0	0	5.0	4.0	5.0	5.0	0	0
Measuring Pin No.	49	50	51	52	53	54	55	56	57	58	59	60	61	62	63	64
Stop Mode													(0)			0
Play Mode	0	0	0	0	0	5.0	0	0	5.0	5.0	5.0	5.0	(5.0)	0	5.0	5.0

NOTES :

PIN 4 : Stop Mode = OTHER
Play Mode = TAPE & TUNER

PIN 5 : Stop Mode = OTHER
Play Mode = CD & PHONO

PIN 6 : Stop Mode = OTHER
Play Mode = TUNER, AV & CD

PIN 16 : Stop Mode = OTHER
Play Mode = WAIT THE SYNCRO

PIN 23 : Stop Mode = ON THE DISC
Play Mode = ON THE NO DISC

PIN 37 : Stop Mode = OTHER
Play Mode = CLOSING THE TRAY

PIN 39 : Stop Mode = OTHER
Play Mode = OPENING THE TRAY

PIN 62 : Stop Mode = EMPHASIS ON
Play Mode = EMPHASIS OFF

IC104 LC7866E

Measuring Pin No.	1	2	3	4	5	6	7	8	9	10	11	12	13	14	15	16
Stop Mode	0	2.31	2.34	2.51	0	2.46	2.48	2.52	0	0	0	4.92	0	2.51	4.07	4.07
Play Mode	Fluc	Fluc	Fluc	Fluc	0	Fluc	Fluc	Fluc	Fluc	Fluc	Fluc	Fluc	Fluc	Fluc	Fluc	Fluc
Measuring Pin No.	17	18	19	20	21	22	23	24	25	26	27	28	29	30	31	32
Stop Mode	4.07	2.5	0	4.95	4.97	0	0	5.0	0	0	0	0	0	5.0	1.25	1.25
Play Mode	Fluc	Fluc	Fluc	Fluc	Fluc	Fluc	Fluc	5.0	Fluc	Fluc	Fluc	Fluc	Fluc	5.0	Fluc	Fluc
Measuring Pin No.	33	34	35	36	37	38	39	40	41	42	43	44	45	46	47	48
Stop Mode	2.5	2.5	0	2.5	0	2.5	2.41	1.63	2.5	4.5	2.52	Fluc	2.28	0	2.5	0
Play Mode	Fluc	Fluc	Fluc	Fluc	Fluc	Fluc	Fluc	Fluc	0(4.5)	Fluc	Fluc	Fluc	Fluc	Fluc	Fluc	Fluc
Measuring Pin No.	49	50	51	52	53	54	55	56	57	58	59	60	61	62	63	64
Stop Mode	2.5	Fluc	Fluc	Fluc	0	5.0	4.48	0	4.92	Fluc	2.33	4.93	0	0	2.28	2.47
Play Mode	Fluc	Fluc	Fluc	Fluc	0	5.0	Fluc	0	Fluc	Fluc	Fluc	Fluc	Fluc	0	Fluc	Fluc

IC105 SM5870DS

Measuring Pin No.	1	2	3	4	5	6	7	8	9	10	11	12	13	14	15	16
Play Mode	3.0	0	0	0	5.0	5.0	5.0	2.5	2.4	1.6	5.0	0	0	4.8	0	5.0
Measuring Pin No.	17	18	19	20	21	22	23	24	25	26	27	28				
Play Mode	5.0	2.4	0	2.4	5.0	5.0	2.4	0	2.4	5.0	5.0	1.3				

IC106 XRA15218F

Measuring Pin No.	1	2	3	4	5	6	7	8
Play Mode	Fluc	1.3	1.3	-5.0	1.3	1.3	Fluc	5.0

VOLTAGES OF IC & TRANSISTOR (CD)

Transistor No.	IC107			IC108			IC109		
Measuring Pin Name	1 (OUT)	2 (GND)	3 (IN)	1 (COM)	2 (IN)	3 (OUT)	1 (OUT)	2 (GND)	3 (IN)
Stop Mode	5.0	0	11	-11.5	0	-5.0	5.6	0.6	12
Play Mode	5.0	0	10	-11.5	0	-5.0	5.6	0.6	12

TRANSISTOR

(Unit : Volt)

Transistor No.	Q101			Q102			Q103			Q1301		
Measuring Pin Name	E	C	B	E	C	B	E	C	B	E	C	B
Stop Mode	5.0	0	4.7	2.0	2.5	2.5	0	0	0.6			
Play Mode	3.6	1.8	3.0				0	4.9	0	5.0	5.0	0
Transistor No.	Q1302			Q1303			Q1304			Q1305		
Measuring Pin Name	E	C	B	E	C	B	E	C	B	E	C	B
Stop Mode				4.8	4.8	0	0	0	0.6	5.0	5.0	4.3
Play Mode	0	5.0	0	0	-5.0	0	0	0	0.6	5.0	5.0	4.3
Transistor No.	Q1500			Q1501								
Measuring Pin Name	E	C	B	E	C	B						
Stop Mode	0	0	0.6	0	0	0.6						
Play Mode	0	0	-5.0	0	0	-5.0						

WIRING CONNECTION (TUNER / CD UNIT)

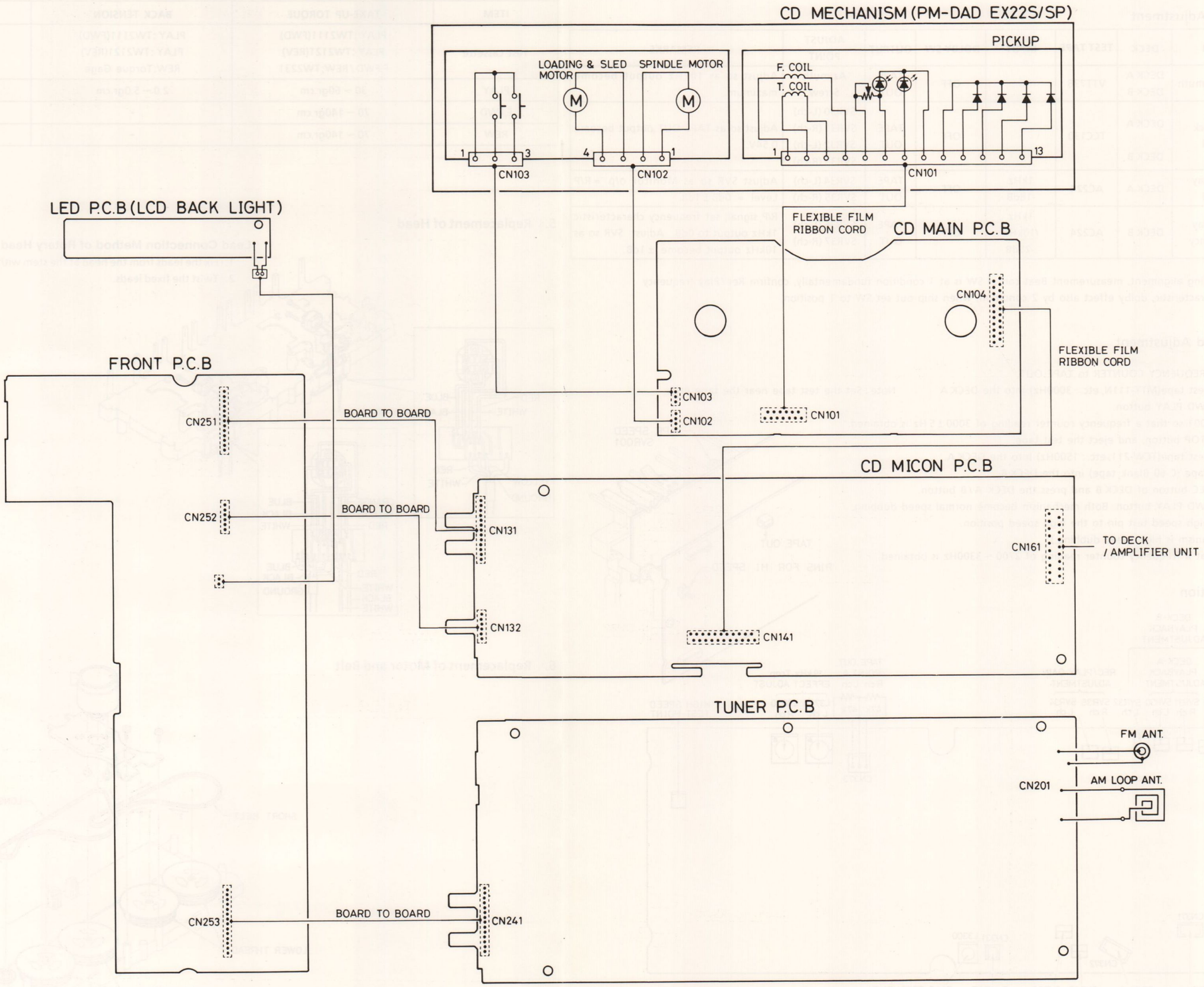

TAPE DECK / AMPLIFIER UNIT

ADJUSTMENT (TAPE DECK)

1. Amplifier Adjustment

STEP	ITEM	DECK	TEST TAPE	INPUT	DOLBY SW	OUTPUT	ADJUST POINT	REMARKS
1	Head Azimuth	DECK A DECK B	VTT738	-	OFF	TAPE OUT	Azimuth Screw	Adjust so as 10kHz output become maximum.
2	Playback Level	DECK A DECK B	TCC130	-	OFF	TAPE OUT	SVR30 (L-ch) SVR31 (R-ch) SVR32 (L-ch) SVR33 (R-ch)	Adjust so as TAPE OUT output become 0.54V.
3	Rec / Play Level	DECK A	AC224	1kHz -18dB	OFF	TAPE OUT	SVR34 (L-ch) SVR35 (R-ch)	Adjust SVR so as Monitor o/p = R/P Level = 0dB ± 1dB.
4	Rec / Play Frequency	DECK B	AC224	1kHz /10kHz -28dB	OFF	TAPE OUT	SVR36 (L-ch) SVR37 (R-ch)	R/P signal, set frequency characteristic 1kHz output to 0dB. Adjust SVR so as 10kHz output become ± 1dB.

Note. 1. During alignment, measurement Beat cancel SW is at 1 condition fundamentally, confirm Rec / Play frequency characteristic, dolby effect also by 2 condition, when ship out set SW to 1 position.

2. Tape Speed Adjustment

Connect the FREQUENCY COUNTER to TAPE OUT.

1. Insert the test tape(MTT-111N, etc. : 3000Hz) into the DECK A. Note : Set the test tape near the tape end.
2. Press the FWD PLAY button.
3. Adjust SVR001 so that a frequency counter reading of 3000 ± 5 Hz is obtained.
4. Press the STOP button, and eject the test tape.
5. Insert the test tape(TCW-211, etc. : 1500Hz) into the DECK A.
6. Insert the tape (C-60 Blank tape) into the DECK B.
7. Press the REC button of DECK B and press the DECK A / B button. Press the FWD PLAY button. Both mechanism become normal speed dubbing.
8. Short the high speed test pin to the high speed position. (The mechanism is high speed dubbing.)
9. Confirm that a frequency counter reading of 2700 ~ 3300Hz is obtained.

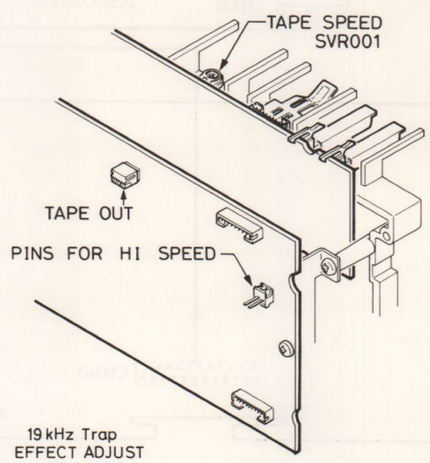

3. Parts Location

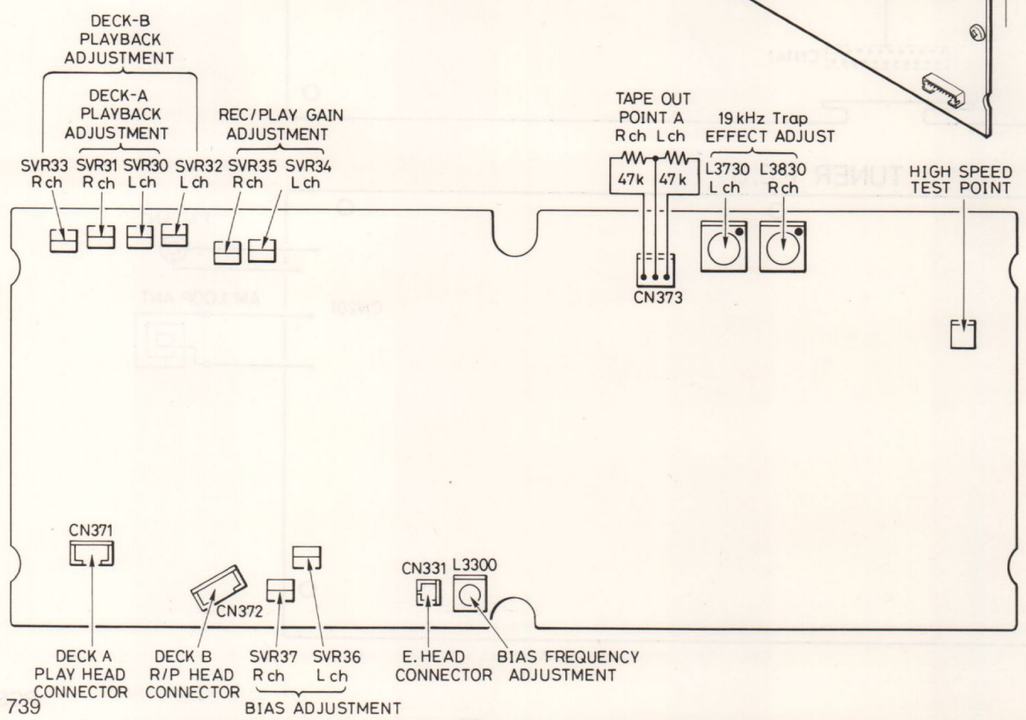

PCS 67 739

ADJUSTMENT & TORQUE (TAPE DECK)

4. Torque Measurements

ITEM	TAKE-UP TORQUE	BACK TENSION	TAPE TENSION
Test cassette	PLAY : TW2111(FWD) PLAY : TW2121(REV) F.FWD / REW; TW2231	PLAY : TW2111(FWD) PLAY : TW2121(REV) REW: Torque Gage	Driving power cassette: TW-2412(FWD) TW-2422(REV)
PLAY	30 ~ 60gr.cm	2.0 ~ 5.0gr.cm	> 80g
F.FWD	70 ~ 140gr.cm	-	
REW	70 ~ 140gr.cm	-	

5. Replacement of Head

Lead Connection Method of Rotary Head

1. Fix the leads from the head at the stem with the rubber adhesives.
2. Twist the fixed leads.

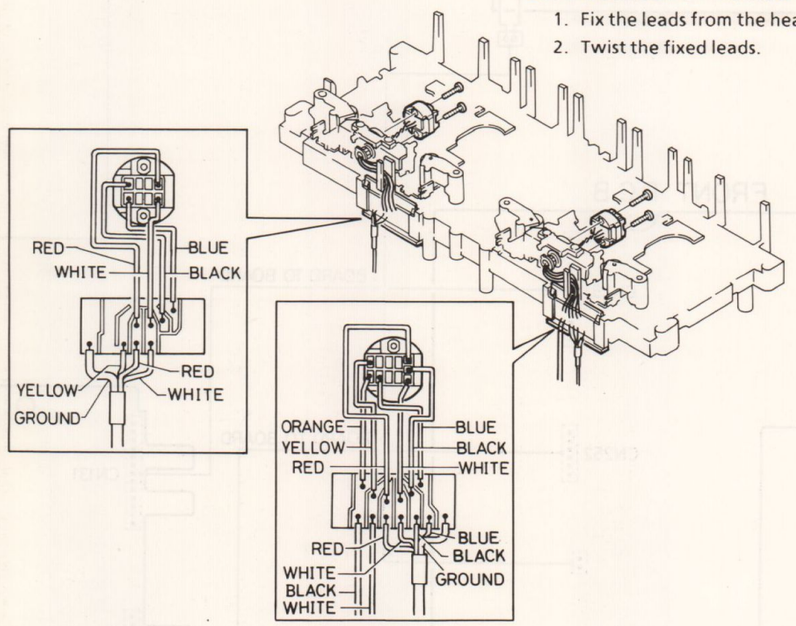

6. Replacement of Motor and Belt

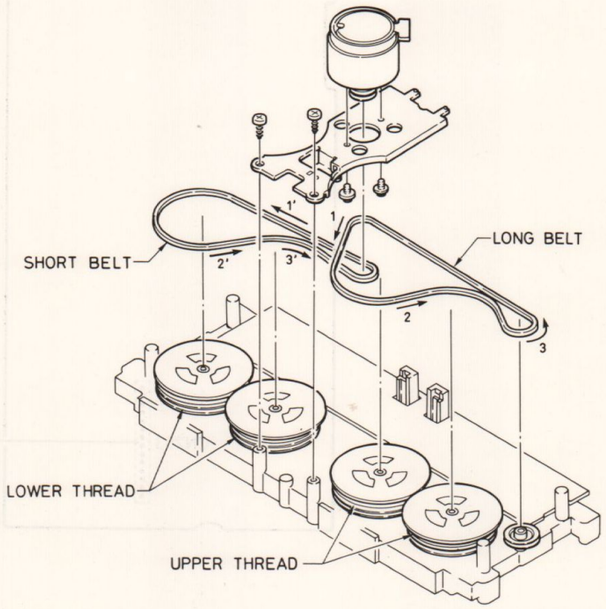

EXPLODED VIEW (TAPE DECK / AMPLIFIER UNIT)

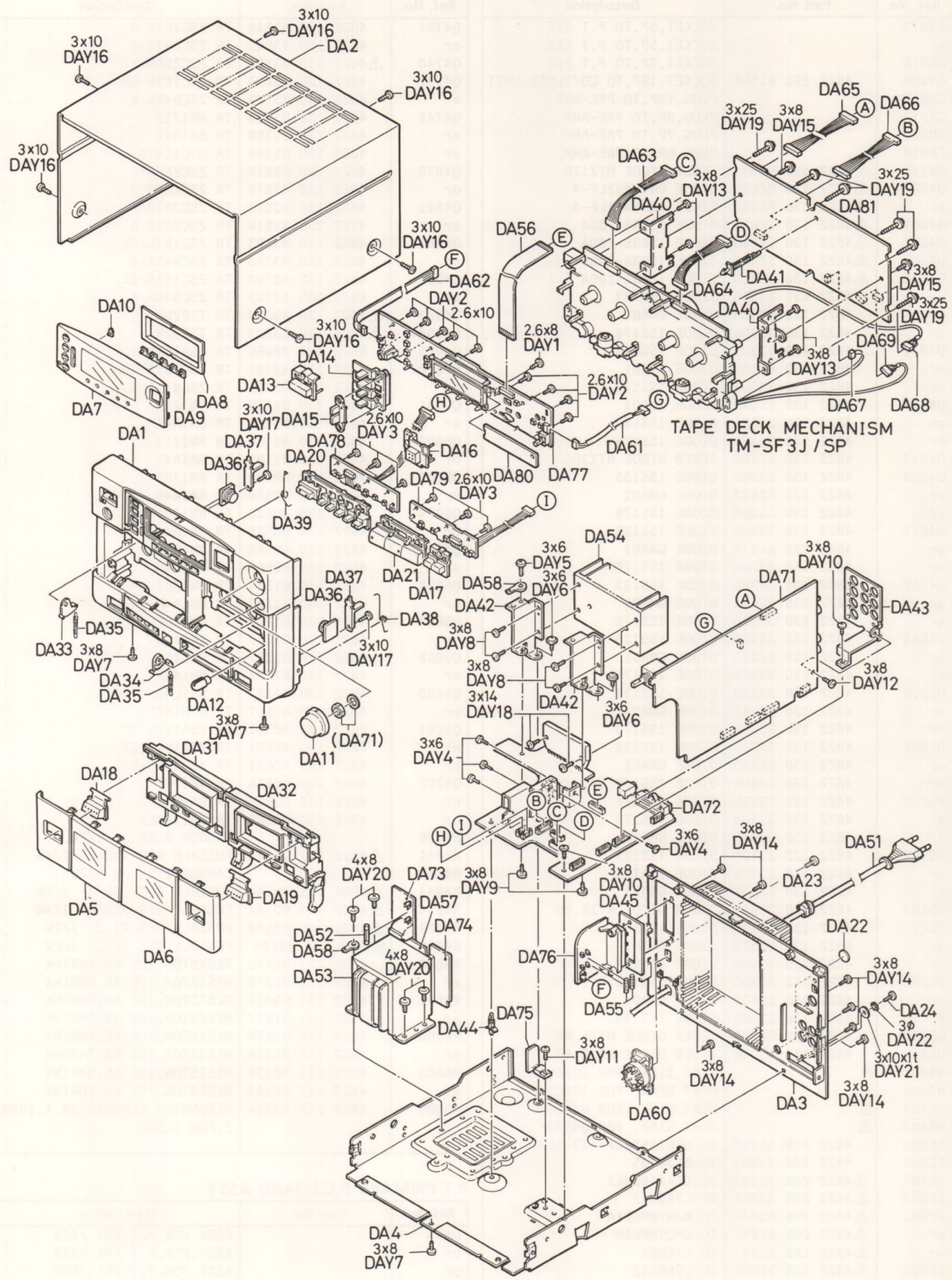

PARTS LIST (TAPE DECK / PRE-AMPLIFIER UNIT)

PRODUCT SAFETY NOTICE

Each precaution in this manual should be followed during servicing. Components identified with the IEC symbol ⚠ in the parts list and the schematic diagram designate components in which safety can be of special significance. When replacing a component identified ⚠, use only the replacement parts designated, or parts with the same ratings of resistance, wattage or voltage that are designated in the parts list in this manual. Leakage-current or resistance measurements must be made to determine that exposed parts are acceptably insulated from the supply circuit before returning the product to the customer.

CAUTION: Regular type resistors and capacitors are not listed. To know those values, refer to the schematic diagram.

CABINET

Ref. No.	Part No.	Description
DA1	4822 443 41204	ASSY,PANEL,FRONT
DA2	4822 443 10126	ASSY,CABINET,TOP
DA3	4822 426 20229	ASSY,PANEL,REAR /01B
DA3	4822 426 20231	ASSY,PANEL,REAR /07B
DA3	4822 426 20232	ASSY,PANEL,REAR /60B
DA4		ASSY,CABINET,BOTTOM
DA5	4822 443 63806	ASSY,COVER,TAPE A
DA6	4822 443 63807	ASSY,COVER,TAPE B
DA7	4822 454 21081	ASSY,ESCUTCHEON,LCD
DA8	4822 454 21079	ESCUTCHEON, LCD VIEW AREA COVER
DA9	4822 450 62005	WINDOW,TAPE-VIDEO(LED)
DA10	4822 450 62006	WINDOW,DYNAMIC BASS(LED)
DA11	4822 413 41763	KNOB,ROTARY,VOLUME
DA12	4822 413 31725	KNOB,ROTARY,BALANCE
DA13	4822 410 62418	BUTTON,POWER
DA14	4822 410 62491	ASSY,BUTTON,PRESET
DA15	4822 410 62419	BUTTON,EQUALIZER
DA16	4822 410 62421	BUTTON,FUNCTION
DA17	4822 410 62422	BUTTON,F.FWD/REWIND
DA18	4822 413 31726	KNOB,LEVER,EJECT A
DA19	4822 413 41772	KNOB,LEVER,EJECT B
DA20	4822 410 62424	ASSY,BUTTON,REC
DA21	4822 410 62425	ASSY,BUTTON,PLAY
DA22		COVER,PANEL REAR
DA23	4822 532 12223	FIXER,AC CORD
DA24		SCREW,SPECIAL,PHONO EARTH

Ref. No.	Part No.	Description
DAY07		SCR S-TPG BIN 3X8, FRONT-BOTTOM FIX
DAY08		SCR S-TPG BIN 3X8, HEAT SINK-BRACKET FIX
DAY09		SCR S-TPG BIN 3X8, BRACKET-PCB FIX
DAY10		SCR S-TPG BIN 3X8, PCB-BOTTOM FIX
DAY11		SCR S-TPG BIN 3X8, 3-TERMINALS FIX
DAY12		SCR S-TPG BIN 3X8, SHIELD-SIDE PCB FIX
DAY13		SCR S-TPG BIN 3X8, D.MECHA - BRACKET-E FIX
DAY14		SCR S-TPG BIN 3X8, REAR PANEL FIX
DAT15	4822 502 13808	SCR S-TPG BRZ+FLG 3X8, DECK PCB FIX
DAY16		SCR S-TPG BIN 3X10,CABINET
DAY17		SCR S-TPG BIN 3X10,GEAR
DAY18	4822 502 13783	SCR S-TPG BRZ+FLG 3X14, HEAT SINK-POWER IC
DAY19		SCR S-TPG BIN 3X25, MECHANISM FIX
DAY20		SCR S-TPG BIM 4X8,P.T
DAY21		WASHER Z 3X10X1,PHONO EARTH
DAY22		WASHER OUT TW 3,PHONO EARTH

CHASSIS

Ref. No.	Part No.	Description
DA31	4822 443 63808	ASSY,LID,CASSETTE,TAPE A
DA32	4822 443 63809	ASSY,LID,CASSETTE,TAPE B
DA33	4822 403 70797	LEVER,EJECT L
DA34	4822 403 70798	LEVER,EJECT R
DA35	4822 492 33375	SPRING,TENS,EJECT
DA36	4822 522 33336	ASSY,GEAR,CASSETTE DUMPER
DA37	4822 529 10293	MOUNT-M,DUMPER GEAR FIX
DA38	4822 492 71276	SPRING WIRE,CASSETTE OPEN
DA39	4822 492 71277	SPRING WIRE,CASSETTE OPEN
DA40		BRACKET-E,DECK PCB
DA41	4822 532 12224	FIXER,DECK PCB
DA42		BRACKET-M,HEAT SINK
DA43		SHIELD,RCA SOCKET
DA44	4822 532 12225	FIXER,MAIN PCB
DA45		INSULATOR,SPEAKER SOCKET
	4822 532 12226	FIXER,DRESS LEAD

FIXING PARTS

Ref. No.	Part No.	Description
DAY01		SCR S-TPG BIN 2.6X8, LED PCB FIX
DAY02		SCR S-TPG BIN 2.6X10, FRONT PCB FIX
DAY03		SCR S-TPG BIN 2.6X10, DECK PCB FIX
DAY04		SCR S-TPG BIN 3X6,IC·TR FIX
DAY05		SCR S-TPG BIN 3X6,LUG FIX
DAY06	4822 502 13789	SCR S-TPG BRZ+FLG 3X6,BRACKET-BOTTOM FIX

ELECTRICAL PARTS

Ref. No.	Part No.	Description
DA51		POWER CORD,AC-IN /07B
DA51 or		POWER CORD,AC-IN /01B·/60B
DA52	⚠4822 070 31252	FUSE 250V T1.25A, POWER (FU999)
DA53	⚠4822 146 21713	POWER TRANSFORMER /01B
DA53	⚠4822 146 21714	POWER TRANSFORMER /07B
DA53	⚠4822 146 21715	POWER TRANSFORMER /60B
DA54		HEAT SINK,FOR IC700
DA55	⚠4822 253 30146	FUSE 250V T3.15A, SPEAKER (FU701·801)
DA56	4822 321 61848	CORD,17P,FRONT-MAIN(FFC)
DA57		INSULATOR,P.T COVER
DA58		LUG,EARTH
DA59	⚠4822 253 30429	FUSE 250V T2.5A(FU998) /01B
DA60	⚠4822 272 10343	SWITCH.SELECTOR, VOLTAGE /01B
DA61		ASSY,CONNECTOR-S,3P, FRONT-PRE
DA62		ASSY,CONNECTOR-S,4P, FRONT-SP
DA63		ASSY,CONNECTOR-S,8P, MAIN-MECHA.A(CN001)
DA64		ASSY,CONNECTOR-S,8P, MAIN-MECHA.B(CN002)
DA65		ASSY,CONNECTOR-S,9P, PRE-DECK(CN301)
DA66		ASSY,CONNECTOR-S,9P, MAIN-DECK(CN302)

PCS 67 740

PARTS LIST (TAPE DECK / AMPLIFIER UNIT)

Ref. No.	Part No.	Description
DA67		ASSY,CONNECTOR-S,2P, E HEAD(CN341)
DA68		ASSY,CONNECTOR-S,3P, P HEAD(CN381)
DA69		ASSY,CONNECTOR-S,5P, R/P HEAD(CN382)

PRE-AMPLIFIER P.C.BOARD ASSY

Ref. No.	Part No.	Description
DA71		ASSY,PCB,PRE-AMP. /01B
or		ASSY,PCB,PRE-AMP. /07B
or		ASSY,PCB,PRE-AMP. /60B
C4516		MT-POLYEST 0.082U J 63V
C4517		MT-POLYEST 0.27U J 63V
C4518		MT-POLYEST 0.033U J 63V
C4519		MT-PLLYEST 0.1U J 63V
C4572	4822 121 70253	POLYESTER 0.1U J 50V
C4573	4822 121 70253	POLYESTER 0.1U J 50V
C4574	4822 121 70253	POLYESTER 0.1U J 50V
C4575	4822 121 70253	POLYESTER 0.1U J 50V
C4578		POLYESTER 0.056U J 50V
C4616		MT-POLYEST 0.082U J 63V
C4617		MT-POLYEST 0.27U J 63V
C4618		MT-POLYEST 0.033U J 63V
C4619		MT-PLLYEST 0.1U J 63V
C4672	4822 121 70253	POLYESTER 0.1U J 50V
C4673	4822 121 70253	POLYESTER 0.1U J 50V
C4674	4822 121 70253	POLYESTER 0.1U J 50V
C4675	4822 121 70253	POLYESTER 0.1U J 50V
C4678		POLYESTER 0.056U J 50V
CN301		PLUG,9P,TO DECK
CN411	4822 267 51211	SOCKET,10P,TO MAIN-AMP.
CN412	4822 267 51212	SOCKET,8P,TO MAIN-AMP.
CN413	4822 267 51213	SOCKET,7P,TO MAIN AMP.
CN414	4822 267 41077	SOCKET,6P,TO MAIN-AMP.
CN431	4822 267 41078	SOCKET,4P,RCA, PHONO & VIDEO IN
CN432	4822 267 31609	SOCKET,1P,RCA,EXT SP
CN441		PLUG,3P,TO FRONT(VR)
D4330	4822 130 33305	DIODE 1SS176
or	4822 130 33305	DIODE 1SS133
or	4822 130 82633	DIODE GMA01
D4350	4822 130 33948	ZENER DIODE MTZ5.6B
D4450	4822 130 33948	ZENER DIODE MTZ5.6B
D4500	4822 130 82703	ZENER DIODE MTZ5.1B
D4501	4822 130 80318	ZENER DIODE MTZ6.8C
D4502	4822 130 80318	ZENER DIODE MTZ6.8C
IC701	4822 209 30798	IC LA6458S
IC702	4822 209 62253	IC BU4051B
IC703	4822 209 30798	IC LA6458S
IC704	4822 209 30798	IC LA6458S
IC705	4822 209 71783	IC LC7522
IC706	4822 209 30798	IC LA6458S
IC707	4822 209 30193	IC LB1641
IC711	4822 209 30798	IC LA6458S
IC802	4822 209 62253	IC BU4051B
L4190	4822 157 63376	COIL,CHOKE
Q4301	4822 130 61188	TR BA1L4Z
or	4822 130 61188	TR DTC144TS
Q4302	4822 130 43793	TR 2SC1815-GR
or	4822 130 43793	TR 2SC945A-K
Q4303	4822 130 61188	TR BA1L4Z
or	4822 130 61188	TR DTC144TS
Q4304	4822 130 61188	TR BA1L4Z
or	4822 130 61188	TR DTC144TS
Q4305	4822 130 43793	TR 2SC1815-GR
or	4822 130 43793	TR 2SC945A-K
Q4306	4822 130 43793	TR 2SC1815-GR
or	4822 130 43793	TR 2SC945A-K
Q4307	4822 130 43793	TR 2SC1815-GR
or	4822 130 43793	TR 2SC945A-K

Ref. No.	Part No.	Description
Q4308	4822 130 61188	TR DTC144TS
or	4822 130 61188	TR BA1L4Z
Q4309	4822 130 61188	TR DTC144TS
or	4822 130 61188	TR BA1L4Z
Q4330	4822 130 43819	TR 2SC2878-A
or	4822 130 43819	TR 2SC2878-B
Q4504	4822 130 43793	TR 2SC1815-GR
or	4822 130 43793	TR 2SC945A-K
Q4505	4822 130 43793	TR 2SC1815-GR
or	4822 130 43793	TR 2SC945A-K
Q4506	4822 130 43793	TR 2SC1815-GR
or	4822 130 43793	TR 2SC945A-K
Q4507	4822 130 43793	TR 2SC1815-GR
or	4822 130 43793	TR 2SC945A-K
Q4508	4822 130 43793	TR 2SC1815-GR
or	4822 130 43793	TR 2SC945A-K
Q4509	4822 130 43793	TR 2SC1815-GR
or	4822 130 43793	TR 2SC945A-K
Q4510	4822 130 43793	TR 2SC1815-GR
or	4822 130 43793	TR 2SC945A-K
Q4570	4822 130 43793	TR 2SC1815-GR
or	4822 130 43793	TR 2SC945A-K
Q4571	4822 130 43793	TR 2SC1815-GR
or	4822 130 43793	TR 2SC945A-K
Q4604	4822 130 43793	TR 2SC1815-GR
or	4822 130 43793	TR 2SC945A-K
Q4605	4822 130 43793	TR 2SC1815-GR
or	4822 130 43793	TR 2SC945A-K
Q4606	4822 130 43793	TR 2SC1815-GR
or	4822 130 43793	TR 2SC945A-K
Q4607	4822 130 43793	TR 2SC1815-GR
or	4822 130 43793	TR 2SC945A-K
Q4608	4822 130 43793	TR 2SC1815-GR
or	4822 130 43793	TR 2SC945A-K
Q4609	4822 130 43793	TR 2SC1815-GR
or	4822 130 43793	TR 2SC945A-K
Q4610	4822 130 43793	TR 2SC1815-GR
or	4822 130 43793	TR 2SC945A-K
Q4670	4822 130 43793	TR 2SC1815-GR
or	4822 130 43793	TR 2SC945A-K
Q4671	4822 130 43793	TR 2SC1815-GR
or	4822 130 43793	TR 2SC945A-K
R4190	⚠4822 116 60314	FUSIBLE RES 10 J- 1/4W
RA450	4822 111 91513	RESISTOR,100K X8
or	4822 111 91513	RESISTOR,100K X8
RA451	4822 111 91513	RESISTOR,100K X8
or	4822 111 91513	RESISTOR,100K X8
S3101	4822 277 21543	SWITCH,BEAT CANCEL
or	4822 277 21543	SWITCH,BEAT CANCEL
S4302	4822 276 30421	SWITCH,TACT,RESET
VR451	4822 100 11896	VR,ROTARY,100K(B), MAIN VOLUME

MAIN- AMPLIFIER P.C.BOARD ASSY

Ref. No.	Part No.	Description
DA72		ASSY,PCB,MAIN-AMP. /01B
or		ASSY,PCB,MAIN-AMP. /07B
or		ASSY,PCB,MAIN-AMP. /60B
C4907		ELECT 3300U M 50V
C4908		ELECT 3300U M 50V
C4925		ELECT 2200U M 35V
C5000		ELECT 1000U M 6.3V
CN001		PLUG,8P,TO MECHA. A
CN002		PLUG,8P,TO MECHA. B
CN302		PLUG,9P,TO DECK-AMP.
CN321		PLUG,6P,TO FRONT SW1
CN322		PLUG,6P,TO FRONT SW2
CN500	4822 267 51215	SOCKET,17P,TO FRONT(FFC)
CN802	4822 290 81555	SOCKET,4P,TO SP TERMINAL
CN850		SOCKET,3P,TO REGULATOR IC
or		SOCKET,3P,TO REGULATOR IC

PCS 67 741

PARTS LIST (TAPE DECK / AMPLIFIER UNIT)

Ref. No.	Part No.	Description
CN870		SOCKET,5P,TO P.T SEC
or		SOCKET,5P,TO P.T SEC
CN871		SOCKET,3P,TO P.T PRI
CN900	4822 290 81556	SOCKET,19P,TO CD/TUNER UNIT
CN911		PLUG,10P,TO PRE-AMP
CN912		PLUG,8P,TO PRE-AMP
CN913		PLUG,7P,TO PRE-AMP
CN914		PLUG,6P,TO PRE-AMP
D4741	4822 130 83271	ZENER DIODE MTZ12B
D4900	⚠4822 130 82658	DIODE RBV-402LF-A
or	⚠4822 130 82658	DIODE RBA-402LF-A
D4901	⚠4822 130 32816	DIODE 1SR35-200A
D4902	⚠4822 130 32816	DIODE 1SR35-200A
D4903	⚠4822 130 32816	DIODE 1SR35-200A
D4904	⚠4822 130 32816	DIODE 1SR35-200A
D4905	4822 130 33305	DIODE 1SS133
or	4822 130 82633	DIODE GMA01
or	4822 130 33305	DIODE 1SS176
D4911	4822 130 33305	DIODE 1SS133
or	4822 130 82633	DIODE GMA01
or	4822 130 33305	DIODE 1SS176
D4912	4822 130 82633	DIODE GMA01
or	4822 130 33305	DIODE 1SS133
or	4822 130 33305	DIODE 1SS176
D4913	4822 130 82668	ZENER DIODE MTZ15C
D4950	4822 130 33305	DIODE 1SS133
or	4822 130 82633	DIODE GMA01
or	4822 130 33305	DIODE 1SS176
D4951	4822 130 33305	DIODE 1SS133
or	4822 130 82633	DIODE GMA01
or	4822 130 33305	DIODE 1SS176
D4952	4822 130 33305	DIODE 1SS133
or	4822 130 82633	DIODE GMA01
or	4822 130 33305	DIODE 1SS176
D4953	4822 130 33305	DIODE 1SS133
or	4822 130 82633	DIODE GMA01
or	4822 130 33305	DIODE 1SS176
D5000	4822 130 33305	DIODE 1SS133
or	4822 130 82633	DIODE GMA01
or	4822 130 33305	DIODE 1SS176
D5005	4822 130 33305	DIODE 1SS133
or	4822 130 82633	DIODE GMA01
or	4822 130 33305	DIODE 1SS176
D5006	4822 130 33305	DIODE 1SS133
or	4822 130 33305	DIODE 1SS176
or	4822 130 82633	DIODE GMA01
D5007	4822 130 33305	DIODE 1SS133
or	4822 130 33305	DIODE 1SS176
or	4822 130 82633	DIODE GMA01
D5200	4822 130 33948	ZENER DIODE MTZ5.6B
D5201	4822 130 33305	DIODE 1SS133
or	4822 130 82633	DIODE GMA01
or	4822 130 33305	DIODE 1SS176
D5202	4822 130 33305	DIODE 1SS176
or	4822 130 82633	DIODE GMA01
or	4822 130 33305	DIODE 1SS133
D5300	4822 130 33948	ZENER DIODE MTZ5.6B
D5301	4822 130 33948	ZENER DIODE MTZ5.6B
HS401	⚠	HEAT SINK, FOR IC900
HS402	⚠	HEAT SINK, FOR IC903
HS403	⚠	HEAT SINK, FOR Q4903
HS404	⚠	HEAT SINK, FOR Q4904
IC500	4822 209 32134	IC UPD75516GF-412-3B9
IC501	4822 209 31502	IC BA3826S
IC700	⚠4822 209 32132	IC STK4162MK2
IC900	⚠4822 209 32061	IC L780S12
IC901	⚠4822 209 61847	IC NJM78M05FA
or	⚠4822 209 61847	IC UPC78M05H
or	⚠4822 209 61847	IC L78M05
IC903	⚠4822 209 32061	IC L780S12
Q4720	4822 130 43819	TR 2SC2878-A
or	4822 130 43819	TR 2SC2878-B

Ref. No.	Part No.	Description
Q4721	4822 130 43819	TR 2SC2878-A
or	4822 130 43819	TR 2SC2878-B
Q4740	⚠4822 130 63198	TR 2SC2655-Y
Q4741	4822 130 43793	TR 2SC1815-GR
or	4822 130 43793	TR 2SC945A-K
Q4742	4822 130 61189	TR RN1211
or	4822 130 61189	TR BA1A4Z
or	4822 130 61189	TR DTC114TS
Q4820	4822 130 43819	TR 2SC2878-A
or	4822 130 43819	TR 2SC2878-B
Q4821	4822 130 43819	TR 2SC2878-A
or	4822 130 43819	TR 2SC2878-B
Q4901	4822 130 43793	TR 2SC1815-GR
or	4822 130 43793	TR 2SC945A-K
Q4902	4822 130 43793	TR 2SC1815-GR
or	4822 130 43793	TR 2SC945A-K
Q4903	⚠4822 130 63224	TR TIP29B
Q4904	⚠4822 130 63223	TR TIP32B
Q4905	4822 130 42959	TR 2SA1015-Y
Q4906	4822 130 43793	TR 2SC1815-GR
or	4822 130 43793	TR 2SC945A-K
Q5001	4822 130 61189	TR RN1211
or	4822 130 61189	TR BA1A4Z
Q5002	4822 130 61189	TR RN1211
or	4822 130 61189	TR BA1A4Z
Q5003	4822 130 60588	TR RN1202
or	4822 130 60588	TR BA1A4M
Q5004	4822 130 60588	TR RN1202
or	4822 130 60588	TR BA1A4M
Q5005	4822 130 60588	TR RN1202
or	4822 130 60588	TR BA1A4M
Q5006	4822 130 61227	TR RN2202
or	4822 130 61227	TR BN1A4M
Q5007	4822 130 61227	TR RN2202
or	4822 130 61227	TR BN1A4M
Q5008	4822 130 61227	TR RN2202
or	4822 130 61227	TR BN1A4M
Q5200	4822 130 61187	TR BN1L4Z
or	4822 130 61187	TR DTA144TS
Q5201	4822 130 42591	TR 2SA1175-FF
or	4822 130 42591	TR 2SA1048-GR
or	4822 130 42591	TR 2SA1175-EF
Q5202	4822 130 60588	TR RN1202
or	4822 130 60588	TR BA1A4M
or	4822 130 60588	TR DTC114ES
R4706		CARBON 2.2K JB 1/2W
R4741	⚠4822 111 90744	FUSIBLE RES 100 J- 1/4W
R4806		CARBON 2.2K JB 1/2W
R4841	⚠4822 111 90744	FUSIBLE RES 100 J- 1/4W
R4844	⚠4822 111 90744	FUSIBLE RES 100 J- 1/4W
R4909	⚠4822 116 82524	FUSIBLE RES 27 J- 1/2W
R4910	⚠4822 117 10204	FUSIBLE RES 47 J- 1/2W
RA500	4822 111 91276	RESISTOR,10K X6,SHRINK
or	4822 111 91276	RESISTOR,10K X6,SHRINK
RA501	4822 111 91677	RESISTOR,10K X3,SHRINK
or	4822 111 91677	RESISTOR,10K X3,SHRINK
RA502	4822 111 91276	RESISTOR,10K X6,SHRINK
or	4822 111 91276	RESISTOR,10K X6,SHRINK
RA503	4822 111 92134	RESISTOR,10K X5,SHRINK
or	4822 111 92134	RESISTOR,10K X5,SHRINK
X5000	4822 242 80324	RESONATOR,CERAMIC,3P,4.19MHZ,FOR IC500

P.T PRIMARY P.C.BOARD ASSY

Ref. No.	Part No.	Description
DA73		ASSY,PCB,P.T-PRI /01B
or		ASSY,PCB,P.T-PRI /07B
or		ASSY,PCB,P.T-PRI /60B
		TERMINAL BOARD,AC-IN
FCLP5		FUSE HOLDER,FU999

PARTS LIST (TAPE DECK / AMPLIFIER UNIT)

Ref. No.	Part No.	Description
FCLP6		FUSE HOLDER,FU999
FCLP7		FUSE HOLDER,FU998 /01B
FCLP8		FUSE HOLDER,FU998 /01B
L9999	⚠4822 157 70342	INDUCTOR,FERITE,AC LINE

P.T SECCONDARY P.C.BOARD ASSY

Ref. No.	Part No.	Description
DA74		ASSY,PCB,P.T-SEC /01B
or		ASSY,PCB,P.T-SEC /07B
or		ASSY,PCB,P.T-SEC /60B
CN770		SOCKET,5P,TO MAIN-AMP.
or		SOCKET,5P,TO MAIN-AMP.
CN771		SOCKET,3P,TO MAIN-AMP.
ICP51	⚠4822 209 61685	IC PROTECTOR ICP-N38
ICP52	⚠4822 209 61685	IC PROTECTOR ICP-N38
R4997	⚠	RESISTOR 0.33 J- 1/2W
R4998	⚠	RESISTOR 0.33 J- 1/2W
R4999	⚠	RESISTOR 0.33 J- 1W

REGULATOR IC P.C.BOARD ASSY

Ref. No.	Part No.	Description
DA75		ASSY,PCB,REG. IC /01B
or		ASSY,PCB,REG. IC /07B
or		ASSY,PCB,REG. IC /60B
CN750		SOCKET,3P,MAIN-AMP.
or		SOCKET,3P,MAIN-AMP.
IC902	⚠4822 209 60826	IC NJM7812FA
or	⚠4822 209 60826	IC L7812ML
or	⚠4822 209 60826	IC UPC7812HF
or	⚠4822 209 60826	IC AN7812F

SPEAKER TERMINAL P.C.BOARD ASSY

Ref. No.	Part No.	Description
DA76		ASSY,PCB,SP TERMINAL /01B
or		ASSY,PCB,SP TERMINAL /07B
or		ASSY,PCB,SP TERMINAL /60B
		LUG,EARTH /60B
C4170		POLYESTER 0.01U K 50V /60B
C4171		POLYESTER 5600P K 50V /60B
C4172		POLYESTER 5600P K 50V /60B
CN700	4822 290 81538	TERMINAL,4P,SPEAKER
CN701		PLUG,4P,TO FRONT
CN702		SOCKET,4P,TO MAIN-AMP.
D4750	4822 130 33305	DIODE 1SS133
or	4822 130 82633	DIODE GMA01
or	4822 130 33305	DIODE 1SS176
FCLP1	4822 156 30329	FUSE HOLDER,FOR FU701
FCLP2	4822 156 30329	FUSE HOLDER,FOR FU701
FCLP3	4822 156 30329	FUSE HOLDER,FOR FU801
FCLP4	4822 156 30329	FUSE HOLDER,FOR FU801
R4750	4822 052 11568	CARBON 5.6 JB 1/2W
R4751	4822 111 90724	CARBON 330 JB 1/2W
R4850	4822 052 11568	CARBON 5.6 JB 1/2W
R4851	4822 111 90724	CARBON 330 JB 1/2W
RY700	4822 280 20487	RELAY,SPEAKER

FRONT P.C.BOARD ASSY

Ref. No.	Part No.	Description
DA77		ASSY,PCB,FRONT /01B
or		ASSY,PCB,FRONT /07B
or		ASSY,PCB,FRONT /60B
		REFLECTOR,LCD
		SHEET,LCD
CN551	4822 267 51214	SOCKET,17P,TO MAIN-AMP.
CN553		PLUG,4P,TO SP TERMINAL
CN554	4822 267 31528	JACK,PHONE
CN555		PLUG,3P,TO PRE-AMP.
D5501	4822 130 83332	LED SLZ-981C-15-T2,STAND BY
D5502	4822 130 82633	DIODE GMA01
or	4822 130 33305	DIODE 1SS133
D5503	4822 130 82633	DIODE GMA01
or	4822 130 33305	DIODE 1SS133
D5511	4822 130 83277	LED SLZ-181C-15-T2,VIDEO
D5512	4822 130 83277	LED SLZ-181C-15-T2,PHONO
D5513	4822 130 83277	LED SLZ-181C-15-T2,TUNER
D5514	4822 130 83277	LED SLZ-181C-15-T2,TAPE
D5515	4822 130 83277	LED SLZ-181C-15-T2,CD
D5516	4822 130 83278	LED SLZ-381C-15-T2,D'BASS
IC551	4822 209 31683	IC LC7582
LCD51	4822 130 91167	LCD(LIQUID CRYSTAL DISPLAY)
Q5501	4822 130 60588	TR RN1202
or	4822 130 60588	TR BA1A4M
or	4822 130 60588	TR DTC114ES
Q5502	4822 130 43793	TR 2SC1815-GR
or	4822 130 43793	TR 2SC945A-K
Q5503	4822 130 61188	TR BA1L4Z
or	4822 130 61188	TR DTC144TS
S5501	4822 276 30419	SWITCH,TACT,POWER
S5502	4822 276 30419	SWITCH,TACT,FUNCTION
S5514	4822 276 30419	SWITCH,TACT,EQ-
S5515	4822 276 30419	SWITCH,TACT,BASS EXPANDER
S5516	4822 276 30419	SWITCH,TACT,DISPLAY
S5517	4822 276 30419	SWITCH,TACT,FREQ/MEMO
S5518	4822 276 30419	SWITCH,TACT,PRESET
S5519	4822 276 30419	SWITCH,TACT,EQ+
VR551	4822 100 11965	VR,ROTARY,BALANCE

FRONT SWITCH 1 P.C.BOARD ASSY

Ref. No.	Part No.	Description
DA78		ASSY,PCB,FRONT SW1 /01B
or		ASSY,PCB,FRONT SW1 /07B
or		ASSY,PCB,FRONT SW1 /60B
CN322		ASSY,CONNECTOR-S,6P, TO MAIN-AMP
D3203	4822 130 83274	LED SLZ-181C-09-A-T1,REC
or	4822 130 83274	LED SLZ-181C-09-B-T1,REC
D3204	4822 130 83276	LED SLP-381C-51-AB,TAPE A
D3205	4822 130 83047	LED SLP-181C-51-A,TAPE B
or	4822 130 82047	LED SLP-181C-51-B,TAPE B
Q3201	4822 130 61227	TR DTA114ES
or	4822 130 61227	TR RN2202
or	4822 130 61227	TR BN1A4M
Q3202	4822 130 61227	TR DTA114ES
or	4822 130 61227	TR RN2202
or	4822 130 61227	TR BN1A4M
S3206	4822 276 13306	SWITCH,TACT,A/B
S3207	4822 276 20514	SWITCH,TACT,DIR
S3208	4822 276 20514	SWITCH,TACT,DOLBY
S3209	4822 276 20514	SWITCH,TACT,DUB
S3210	4822 276 20514	SWITCH,TACT,REC MUTE
S3211	4822 276 13306	SWITCH,TACT,REC

FRONT SWITCH 2 P.C.BOARD ASSY

Ref. No.	Part No.	Description
DA79		ASSY,PCB,FRONT SW2 /01B
or		ASSY,PCB,FRONT SW2 /07B
or		ASSY,PCB,FRONT SW2 /60B
CN321		ASSY,CONNECTOR-S,6P,TO MAIN-AMP.
D3201	4822 130 83275	LED SLZ-381C-09-A-T1,FOW
or	4822 130 83275	LED SLZ-381C-09-B-T1,FOW
D3202	4822 130 83275	LED SLZ-381C-09-A-T1,REV
or	4822 130 83275	LED SLZ-381C-09-B-T1,REV
S3201	4822 276 20514	SWITCH,TACT,STOP

PARTS LIST (TAPE DECK / AMPLIFIER UNIT)

Ref. No.	Part No.	Description
S3202	4822 276 20514	SWITCH,TACT,FOW
S3203	4822 276 20514	SWITCH,TACT,REV
S3204	4822 276 20514	SWITCH,TACT,F.F
S3205	4822 276 20514	SWITCH,TACT,REW

LED (LCD BACK LIGHT) P.C.BOARD ASSY

Ref. No.	Part No.	Description
DA80		ASSY,PCB,LED
CN562		ASSY,CONNECTOR-S,2P, TO FRONT
D5551	4822 130 83272	LED CL-170G-CD-AL
or	4822 130 83272	LED CL-170G-CD-BL
or	4822 130 83272	LED CL-170G-CD-CL
D5552	4822 130 83272	LED CL-170G-CD-AL
or	4822 130 83272	LED CL-170G-CD-BL
or	4822 130 83272	LED CL-170G-CD-CL
D5553	4822 130 83272	LED CL-170G-CD-AH
or	4822 130 83272	LED CL-170G-CD-BH
or	4822 130 83272	LED CL-170G-CD-CH
D5554	4822 130 83272	LED CL-170G-CD-AH
or	4822 130 83272	LED CL-170G-CD-BH
or	4822 130 83272	LED CL-170G-CD-CH
D5555	4822 130 83272	LED CL-170G-CD-AH
or	4822 130 83272	LED CL-170G-CD-BH
or	4822 130 83272	LED CL-170G-CD-CH
D5556	4822 130 83272	LED CL-170G-CD-AL
or	4822 130 83272	LED CL-170G-CD-BL
or	4822 130 83272	LED CL-170G-CD-CL
D5557	4822 130 83272	LED CL-170G-CD-AL
or	4822 130 83272	LED CL-170G-CD-BL
or	4822 130 83272	LED CL-170G-CD-CL
D5558	4822 130 83272	LED CL-170G-CD-AL
or	4822 130 83272	LED CL-170G-CD-BL
or	4822 130 83272	LED CL-170G-CD-CL
D5559	4822 130 83272	LED CL-170G-CD-AH
or	4822 130 83272	LED CL-170G-CD-BH
or	4822 130 83272	LED CL-170G-CD-CH
D5560	4822 130 83272	LED CL-170G-CD-AL
or	4822 130 83272	LED CL-170G-CD-BL
or	4822 130 83272	LED CL-170G-CD-CL
D5561	4822 130 83272	LED CL-170G-CD-AH
or	4822 130 83272	LED CL-170G-CD-BH
or	4822 130 83272	LED CL-170G-CD-CH
D5562	4822 130 83272	LED CL-170G-CD-AL
or	4822 130 83272	LED CL-170G-CD-BL
or	4822 130 83272	LED CL-170G-CD-CL
D5563	4822 130 83272	LED CL-170G-CD-AH
or	4822 130 83272	LED CL-170G-CD-BH
or	4822 130 83272	LED CL-170G-CD-CH
D5564	4822 130 83272	LED CL-170G-CD-AH
or	4822 130 83272	LED CL-170G-CD-BH
or	4822 130 83272	LED CL-170G-CD-CH
D5565	4822 130 83272	LED CL-170G-CD-AL
or	4822 130 83272	LED CL-170G-CD-BL
or	4822 130 83272	LED CL-170G-CD-CL
D5566	4822 130 83272	LED CL-170G-CD-AH
or	4822 130 83272	LED CL-170G-CD-BH
or	4822 130 83272	LED CL-170G-CD-CH
D5567	4822 130 83272	LED CL-170G-CD-AH
or	4822 130 83272	LED CL-170G-CD-BH
or	4822 130 83272	LED CL-170G-CD-CH
D5568	4822 130 83272	LED CL-170G-CD-AL
or	4822 130 83272	LED CL-170G-CD-BL
or	4822 130 83272	LED CL-170G-CD-CL
D5569	4822 130 83272	LED CL-170G-CD-AH
or	4822 130 83272	LED CL-170G-CD-BH
or	4822 130 83272	LED CL-170G-CD-CH
D5570	4822 130 83272	LED CL-170G-CD-AL
or	4822 130 83272	LED CL-170G-CD-BL
or	4822 130 83272	LED CL-170G-CD-CL

DECK AMPLIFIER P.C.BOARD ASSY

Ref. No.	Part No.	Description
DA81		ASSY,PCB,DECK-AMP /01B·/07B
or		ASSY,PCB,DECK-AMP /60B
		SHIELD PLATE
C3303		POLYESTER 0.015U J 50V
C3304		POLYESTER 1500P K 50V
CN301		PLUG,9P,TO PRE-AMP.
CN302		PLUG,9P,TO MAIN-AMP.
CN303		PLUG,2P,HIGH SPEED
CN331		PLUG,2P,E HEAD
CN371		PLUG,4P,P HEAD
CN372		PLUG,5P,R/P HEAD
CN373		SOCKET,3P,TAPE OUT
D3101	4822 130 82633	DIODE GMA01
or	4822 130 33305	DIODE 1SS133
D3102	4822 130 82633	DIODE GMA01
or	4822 130 33305	DIODE 1SS133
D3103	4822 130 82633	DIODE GMA01
or	4822 130 33305	DIODE 1SS133
D3104	4822 130 82633	DIODE GMA01
or	4822 130 33305	DIODE 1SS133
D3105	4822 130 82634	DIODE DS442X
or	4822 130 42112	DIODE 1S2473
D3106	4822 130 82633	DIODE GMA01
or	4822 130 33305	DIODE 1SS133
HS301		HEAT SINK,BIAS LEAK
IC351	4822 209 62251	IC CXA1331S
IC370	4822 209 30189	IC LA3246
IC371	4822 209 82569	IC MLC4066B
or	4822 209 82569	IC BU4066B
or	4822 209 82569	IC TC4066BP
or	4822 209 82569	IC UPD4066BC
IC374	4822 209 31505	IC CXA1298AP
IC375	4822 209 61667	IC UPC1330HA
L3300	4822 148 81297	TRANS,OSC
L3700	4822 157 63355	FILTER,1000UH
L3730	4822 157 70344	MX COIL,85KHZ
L3731	4822 158 60637	INDUCTOR,FERITE,3.3MH
L3750	4822 157 70345	MX COIL,85KHZ
L3800	4822 157 63355	FILTER,1000UH
L3830	4822 157 70344	MX COIL,85KHZ
L3831	4822 158 60637	INDUCTOR,FERITE,3.3MH
L3850	4822 157 70345	MX COIL,85KHZ
Q3101	4822 130 42594	TR DTC144ES
or	4822 130 42594	TR BA1L4M
or	4822 130 42594	TR AA1L4M
or	4822 130 42594	TR RN1204
Q3102	4822 130 42682	TR DTA144ES
or	4822 130 42682	TR BN1L4M
or	4822 130 42682	TR AN1L4M
or	4822 130 42682	TR RN2204
Q3103	4822 130 42594	TR DTC144ES
or	4822 130 42594	TR BA1L4M
or	4822 130 42594	TR AA1L4M
or	4822 130 42594	TR RN1204
Q3104	4822 130 61188	TR DTC144TS
or	4822 130 61188	TR BA1L4Z
Q3105	4822 130 42594	TR DTC144ES
or	4822 130 42594	TR BA1L4M
or	4822 130 42594	TR AA1L4M
or	4822 130 42594	TR RN1204
Q3106	4822 130 42594	TR DTC144ES
or	4822 130 42594	TR BA1L4M
or	4822 130 42594	TR AA1L4M
or	4822 130 42594	TR RN1204
Q3107	4822 130 42682	TR DTA144ES
or	4822 130 42682	TR BN1L4M
or	4822 130 42682	TR AN1L4M
or	4822 130 42682	TR RN2204
Q3108	4822 130 42594	TR DTC144ES
or	4822 130 42594	TR BA1L4M
or	4822 130 42594	TR AA1L4M
or	4822 130 42594	TR RN1204

PARTS LIST (TAPE DECK / AMPLIFIER UNIT)

Ref. No.	Part No.	Description
Q3109	4822 130 61188	TR DTC144TS
or	4822 130 61188	TR BA1L4Z
Q3160	4822 130 42594	TR DTC144ES
or	4822 130 42594	TR BA1L4M
or	4822 130 42594	TR AA1L4M
or	4822 130 42594	TR RN1204
Q3161	4822 130 42682	TR DTA144ES
or	4822 130 42682	TR BN1L4M
or	4822 130 42682	TR AN1L4M
or	4822 130 42682	TR RN2204
Q3300	4822 130 43793	TR 2SC1815-GR
or	4822 130 43793	TR 2SC945A-K
Q3301	4822 130 60696	TR 2SC1627-Y
Q3302	4822 130 62615	TR 2SA1015-GR
or	4822 130 62615	TR 2SA733-P
Q3303	4822 130 43793	TR 2SC1815-GR
or	4822 130 43793	TR 2SC945A-K
or	4822 130 42298	TR 2SC1740S-S
Q3730	4822 130 62768	TR 2SD1468S-S
Q3830	4822 130 62768	TR 2SD1468S-S
SVR30	4822 100 11962	SEMI-FIXED V.R,20K(B)
SVR31	4822 100 11962	SEMI-FIXED V.R,20K(B)
SVR32	4822 100 11962	SEMI-FIXED V.R,20K(B)
SVR33	4822 100 11962	SEMI-FIXED V.R,20K(B)
SVR34	4822 100 11963	SEMI-FIXED V.R,10K(B)
SVR35	4822 100 11963	SEMI-FIXED V.R,10K(B)
SVR36	4822 100 11964	SEMI-FIXED V.R,50K(B)
SVR37	4822 100 11964	SEMI-FIXED V.R,50K(B)

MEMO

EXPLODED VIEW (TAPE DECK MECHANISM)

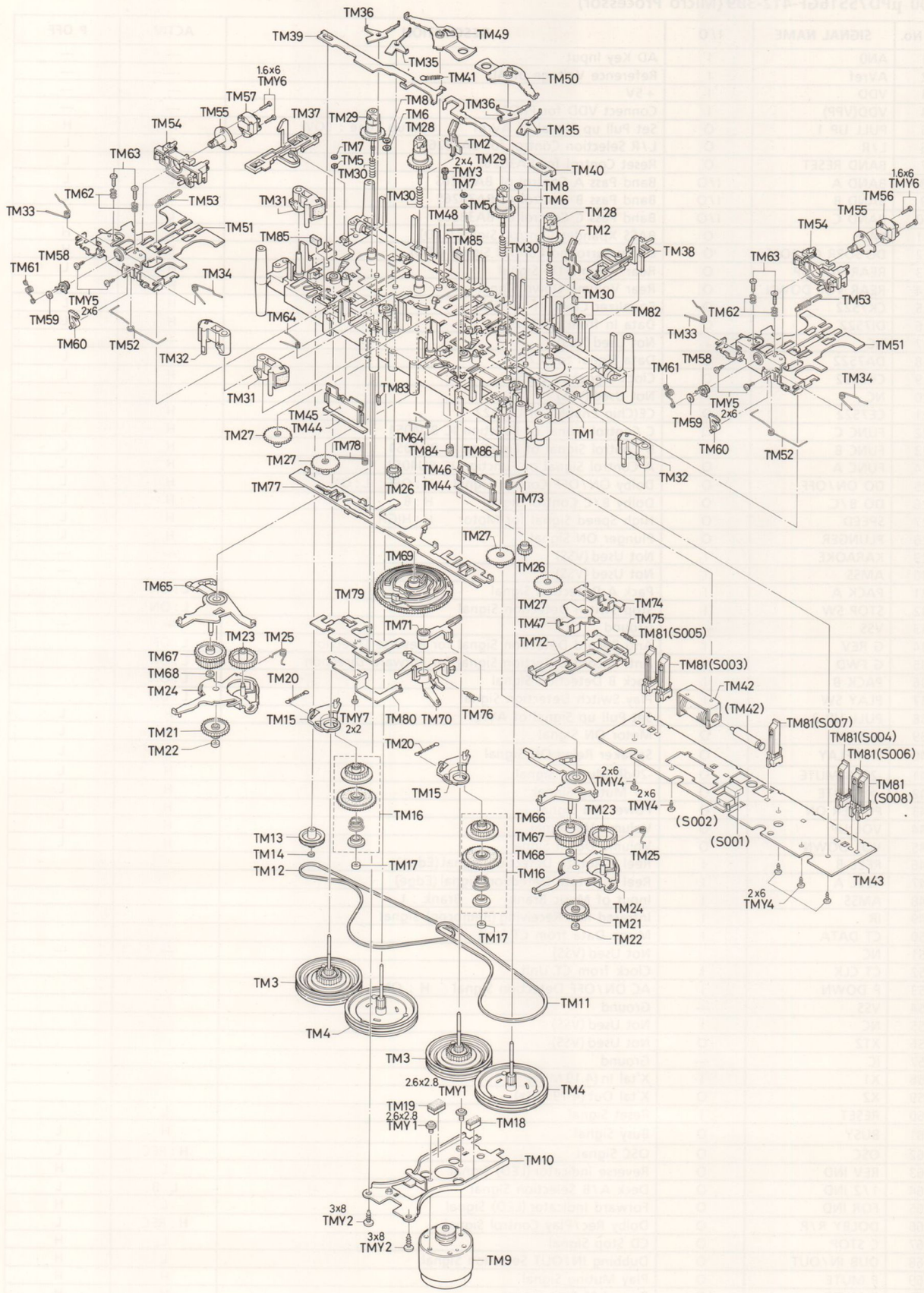

PARTS LIST (TAPE DECK MECHANISM)

TAPE DECK MECHANISM (TM-SF3J / SP)

Ref. No.	Part No.	Description
TM01		ASSY,CHASSIS,TAPE DECK
TM02	4822 492 71278	SPRING PLATE,CASETTE PRESS
TM03	4822 528 60404	ASSY,FLYWHEEL,REV,D2.0
TM04	4822 528 60405	ASSY,FLYWHEEL,NOR,D2.2
TM05	4822 532 12217	SPECIAL WASHER,REV FW FIX
TM06	4822 532 12218	SPECIAL WASHER,NOR FW FIX
TM07	4822 532 12219	SPECIAL WASHER,OIL PROOF REV
TM08	4822 532 12221	SPECIAL WASHER,NOR OIL PROOF
TM09	4822 361 21601	ASSY,COMMUTATE MOTOR
TM10		BRACKET-E,MOTOR
TM11	4822 358 31238	BELT,SQUARE,A-MECHA DRIVE
TM12	4822 358 31239	BELT,SQUARE,B-MECHA DRIVE
TM13	4822 528 50346	PULLEY,BELT DUMMY
TM14	4822 532 12222	SPECIAL WASHER, D.PULLEY
TM15	4822 403 70804	LEVER,PLAY GEAR
TM16	4822 522 33337	ASSY,GEAR,PLAY CLUTCH
TM17		PIPE,PLAY SLIP FIX
TM18	4822 462 71894	CUSHION,BELT TUTCH(B)
TM19	4822 462 71895	CUSHION,BELT TUTCH(A)
TM20	4822 492 33376	SPRING,TENS,PLAY LEVER RESET
TM21	4822 522 33333	GEAR,RELAY FIXED
TM22		PIPE,GEAR FIX
TM23	4822 522 33338	ASSY,GEAR,TAKE UP MOVE
TM24	4822 403 70799	LEVER,TAKE UP MOVE B
TM25	4822 492 71279	SPRING,WIRE,B MECHA REEL CHANGE CLIC
TM26	4822 522 33334	GEAR,REEL RELAY
TM27	4822 522 33335	GEAR,REEL
TM28	4822 528 10871	REEL,RIGHT
TM29	4822 528 10872	REEL,LEFT
TM30	4822 492 52349	SPRING,COMP,BACK TENSION LEFT REEL
TM31	4822 403 70805	ASSY,LEVER,PINCH,LEFT
TM32	4822 403 70806	ASSY,LEVER,PINCH,LIGHT
TM33	4822 492 71281	SPRING,WIRE,PINCH LEFT
TM34	4822 492 71282	SPRING,WIRE,PINCH RIGHT
TM35	4822 403 10306	LEVER,BRAKE R
TM36	4822 403 10305	LEVER,BRAKE L
TM37	4822 417 50282	SLIDE,DOOR LOCK A
TM38	4822 417 50283	SLIDE,DOOR LOCK B
TM39	4822 403 70807	SLIDE,EJECT RELAY A
TM40	4822 403 70808	SLIDE,EJECT RELAY B
TM41	4822 492 33377	SPRING,TENS,EJECT RELAY RESET
TM42	4822 526 20207	MAGNETIC COIL,CAM GEAR TRIGGER SOLENOID
TM43		ASSY,PCB,MECHA
TM44		SHIELD,HEAD PCB
TM45		PCB,P LEAD RELAY
TM46		PCB,R/P LEAD RELAY
TM47	4822 403 70801	LEVER,D.SLIDE LOCK
TM48	4822 492 71283	SPRING,WIRE,LOCK LEVER RESET
TM49	4822 403 70802	LEVER,HEAD SLIDE UP A
TM50	4822 403 70803	LEVER,HEAD SLIDE UP B
TM51	4822 403 70824	ASSY,SLIDE,HEAD
TM52	4822 492 71293	SPRING,WIRE,HEAD SLIDE RESET
TM53	4822 492 71294	SPRING,TENS,HEAD SILED CONT
TM54	4822 403 70819	GUIDE,TAPE
TM55		ASSY,BRACKET-E,HEAD LOCATE
TM56	4822 249 10476	HEAD,REC/PLAY
TM57	4822 249 30193	HEAD,PLAY
TM58	4822 522 33339	GEAR,HEAD ROTARY
TM59	4822 532 12229	SPECIAL WASHER,HEAD THRUST
TM60	4822 403 70827	LEVER,SECTOR
TM61	4822 492 71295	SPRING,WIRE,HEAD CLIC
TM62	4822 492 52352	SPRING,COMP,AZIMUTH COIL
TM63	4822 502 21293	SPECIAL SCREW, AZIMUTH BISS

Ref. No.	Part No.	Description
TM64	4822 492 71296	SPRING,WIRE,HEAD SLIDE EARTH
TM65	4822 403 70828	LEVER,R/F A
TM66	4822 403 70829	LEVER,R/F B
TM67	4822 522 33341	GEAR,R/F MOVE
TM68		PIPE,R/F MOVE GEAR FIX
TM69	4822 522 33342	GEAR,D.CAM
TM70	4822 403 70831	LEVER,MAIN TRIGGER
TM71	4822 403 70832	LEVER,SUB TRIGGER
TM72	4822 403 70821	SLIDE,DRIVE
TM73	4822 492 71297	SPRING,WIRE,D.SLIDE RESET
TM74	4822 403 70822	SLIDE,A/B MECHA CHANGE
TM75	4822 492 33378	SPRING,TENS,MECHANISM CHANGE SLIDE
TM76	4822 492 33379	SPRING,TENS,TRIGGER INNER FORCE
TM77	4822 403 70825	ASSY,SLIDE,HEAD CHANGE
TM78	4822 492 71298	SPRING,WIRE,CHANGE SLIDE RESET
TM79	4822 403 70823	SLIDE,REEL CHANGE NO.1
TM80	4822 403 70826	ASSY,SLIDE,REEL CHANGE NO.2
TM81	4822 271 30795	SWITCH,LEAF,PACK1,S003
or	4822 271 30795	SWITCH,LEAF,PACK2,S004
or	4822 271 30795	SWITCH,LEAF,CROM1,S005
or	4822 271 30795	SWITCH,LEAF,CROM2,S006
or	4822 271 30795	SWITCH,LEAF,URFWD,S007
or	4822 271 30795	SWITCH,LEAF,URREV,S008
TM82	4822 466 62302	CUSHION,RUBBER,SILEN
TM83	4822 466 62303	CUSHION,RF LEVER TOUTCH
TM84	4822 466 62304	CUSHION,RUBBER,DRIVE SLIDE WIRE STOPPER
TM85	4822 466 62305	CUSHION,RUBBER,H.S. STOPPER
TM86		CUSHION,RUBBER,RF LEVER TOUTCH

FIXING PARTS FOR MECHANISM

Ref. No.	Part No.	Description
TY01		SCR PAN-FLG 2.6X2.8
TY02		SCR S-TPG BIN 3X8
TY03	4822 502 13788	SCR PAN+SW 2X4
TY04		SCR S-TPG BIN 2X6
TY05		SCR S-TPG PAN 2X6
TY06		SCR PAN PCS 1.6X6
TY07		SCR PAN PCS 2X2

TAPE DECK MECHANISM P. C,BOARD ASSY

Ref. No.	Part No.	Description
TM43		ASSY,PCB,MECHANISM
CN001		PLUG,8P,CN001,TAPE A
CN002		PLUG,8P,CN002,TAPE B
CN003		SOCKET,4P,CN003,TO MOTOR
D001	4822 130 32508	DIODE DSF10C
or	4822 130 32816	DIODE 1SR35-200A
D002	4822 130 82633	DIODE GMA01
or	4822 130 33305	DIODE 1SS133
D003	4822 130 82703	ZENER DIODE GZS5.1Y
or	4822 130 82703	ZENER DIODE MTZ5.1B
DH001	4822 130 83279	PHOTO COUPLE SPI-335-34-C
DH002	4822 130 83279	PHOTO COUPLE SPI-335-34-C
ICP01	⚠4822 252 51025	IC PROTECTOR ICP-N10
Q001	⚠4822 130 62849	TR 2SB621-S
Q002	4822 130 42715	TR 2SA1048-GR
or	4822 130 42715	TR 2SA933S-S
Q003	⚠4822 130 62849	TR 2SB621-S
S001	4822 277 21631	SWITCH,LEVER,PLAY
S002	4822 277 21631	SWITCH,LEVER,STOP
SVR001	4822 100 11962	SEMI-FIXED V.R,20K(B),TAPE SPEED

IC BLOCK DIAGRAM (TAPE DECK)

IC351 CXA1331S (Dolby Noise Reduction)

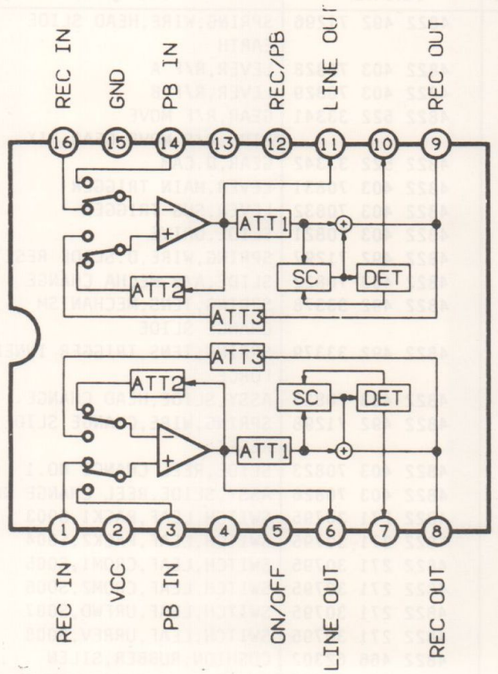

IC371 MLC4066B (Quad Electrical Switch)

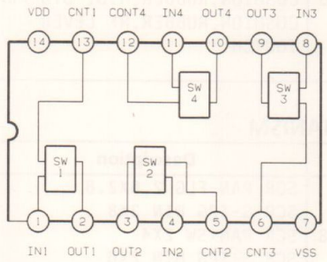

LOGIC DIAGRAM AND TRUTH TABLE

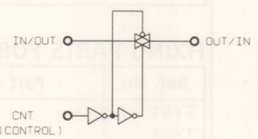

CONTROL	SWITCH
0=VSS	OFF
1=VDD	ON

IC375 μPC1330H (2-ch Head Select Switch)

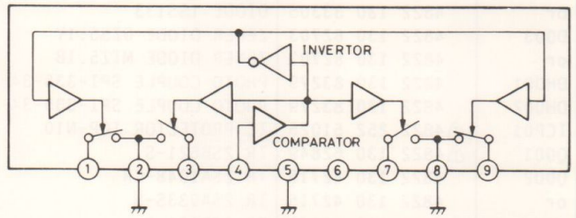

IC370 LA3246 (Pre & Mixing Amplifier with Electrical Switch)

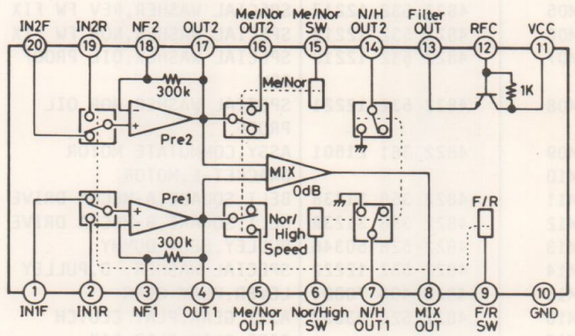

IC374 CXA1298AP (Equalizer Amplifier for Record)

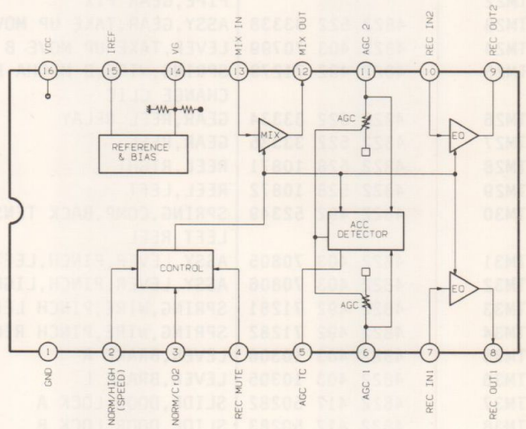

IC BLOCK DIAGRAM (AMPLIFIER)

IC500 μPD75516GF-412-3B9 (Micro Processor)

PIN No.	SIGNAL NAME	I/O	DESCRIPTION	ACTIV	P OFF
1	AN0	I	AD Key Input	---	---
2	AVref	I	Reference Voltage of AD	---	---
3	VDD	I	+5V	---	---
4	VDD(VPP)	I	Connect VDD for PROM	---	---
5	PULL UP 1	O	Set Pull up Signal of AVref Backup Time : LOW	H	H
6	L/R	O	L/R Selection Control for BA3826S	L	L
7	BAND RESET	O	Reset Control for BA3826S	H	L
8	BAND A	I/O	Band Pass A Control of BA3826S	L	L
9	BAND B	I/O	Band Pass B Control of BA3826S	L	L
10	BAND C	I/O	Band Pass C Control of BA3826S	L	L
11	BASS	O	BASS Xpander Control Signal (LED)	L	H
12	DO SURR ON/OFF	O	Dolby Surround Control Signal (LED)	L	H
13	REAR VOL UP	O	Rear Volume Up Signal	H	L
14	REAR VOL DOWN	O	Rear Volume Down Signal	H	L
15	CK7522	O	Equalizer Clock of LC7522	H	L
16	DI7522	O	Data In from LC7522	H	L
17	NC	I	Not Used (VSS)	---	---
18	DA7522	O	Data Signal to LC7522	H	L
19	CK7522	O	Clock Signal to LC7522	H	L
20	NC		Not Used (VSS)	---	---
21	CE7522	O	CE(Chip Enable) of LC7522	H	L
22	FUNC C	O	C Control Signal of Function IC BU4051	H	L
23	FUNC B	O	B Control Signal of Function IC BU4051	H	L
24	FUNC A	O	A Control Signal of Function IC BU4051	H	L
25	DO ON/OFF	O	Dolby ON/OFF Control Signal H : OFF L : ON	H	L
26	DO B/C	O	Dolby B/C Control Signal H : B L : C	H	L
27	SPEED	O	High Speed Signal for Motor H : HIGH	H	L
28	PLUNGER	O	Plunger ON Signal	H	L
29	KARAOKE	I	Not Used (VSS)	---	---
30	AMSS	I	Not Used (VSS)	---	---
31	PACK A	I	Pack A Detection Signal	L : ON	
32	STOP SW	I	Stop Switch Detection Signal	L : ON	
33	VSS	---	Ground	---	---
34	G REV	I	Anti Record Detection Signal for Reverse Direction	L : ON	
35	G FWD	I	Anti Record Detection Signal for Forward Direction	L : ON	
36	PACK B	I	Pack B Detection Signal	L : ON	
37	PLAY SW	I	Play Switch Detection Signal	L : ON	
38	PULL UP 2	O	Set Pull up Signal of AVref	H	L
39	MOTOR	O	Motor ON Signal	H	L
40	SP RELAY	O	Speaker Relay ON Signal	H	L
41	-20dB MUTE	O	-20dB Muting Signal	H	L
42	-∞ MUTE	O	-∞ Muting Signal	H	L
43	POWER ON	O	Power ON Signal	H	L
44	VOL UP	O	Volume Up Signal	H	L
45	VOL DOWN	O	Volume Down Signal	H	L
46	REEL B	I	Reel B Rotate Detection Signal (Edge)		
47	REEL A	I	Reel A Rotate Detection Signal (Edge)		
48	AMSS	I	Input of Music Brank Brank : L		
49	IR	I	Infrared Ray Receiving (Remocon) Signal		
50	CT DATA	I	Micon Data from CT Unit		
51	NC		Not Used (VSS)	---	---
52	CT CLK	I	Clock from CT Unit		
53	P DOWN	I	AC ON/OFF Detection Signal H : ON		
54	VSS	---	Ground		
55	NC	I	Not Used (VSS)		
56	XT2	O	Not Used (VSS)		
57	IC	---	Ground		
58	X1	I	X'tal In (4.19 MHz)		
59	X2	O	X'tal Out (4.19 MHz)		
60	RESET	I	Reset Signal	L	
61	BUSY	O	Busy Signal	H	L
62	OSC	O	OSC Signal	H : REC	L
63	REV IND	O	Reverse Indicator (LED) Signal	L	H
64	1/2 IND	O	Deck A/B Selection Signal	L : B	L
65	FOR IND	O	Forward Indicator (LED) Signal	L	H
66	DOLBY R/P	O	Dolby Rec/Play Control Signal	H : REC	L
67	C STOP	O	CD Stop Signal	L	H
68	DUB IN/OUT	O	Dubbing IN/OUT Selection Signal	L	H
69	P MUTE	O	Play Muting Signal	H	H
70	R MUTE	O	Record Muting Signal	H	H
71	REC IND	O	Record Indicator (LED) Signal	L	H
72	DISCO PARTY	O	Not Used (VSS)		

ACTIV : Active Level P OFF : Power Off Time Level

IC BLOCK DIAGRAM (AMPLIFIER)

PIN No.	SIGNAL NAME	I/O	DESCRIPTION	ACTIV	P OFF
73	A-VSS		AD Ground	---	---
74	PHONO OR VIDEO	I	Not Used (VSS)		
75	MOTOR OR ELECT	I	Not Used (VDD)		
76	REMOCON KEY	I	Not Used (VDD)		
77	NC	I	Not Used (VSS)		
78	BAND LEVEL IN	I	Band Pass VO-IN from BA3826S		
79	VOL LEVEL DC IN	I	Volume Level DC OUT		
80	AN1	I	AD Key Input		

ACTIV : Active Level P OFF : Power Off Time Level

IC501 BA3826S (Band Pass Filter for Spectrum Analyzer)

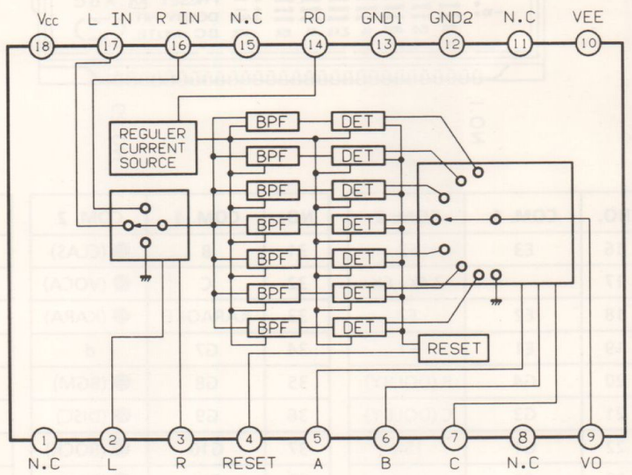

IC551 LC7582 (LCD Driver)

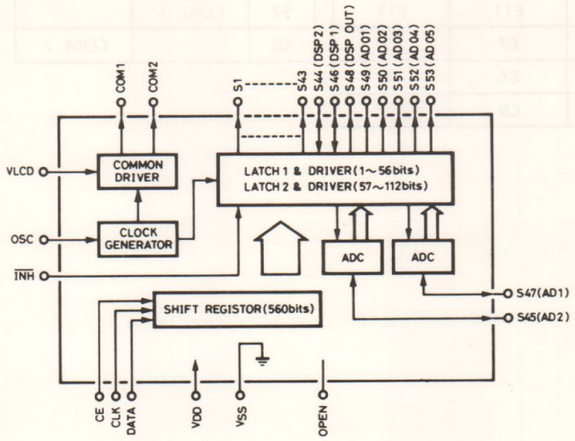

IC700 STK4162MKII (AF Power Amplifier)

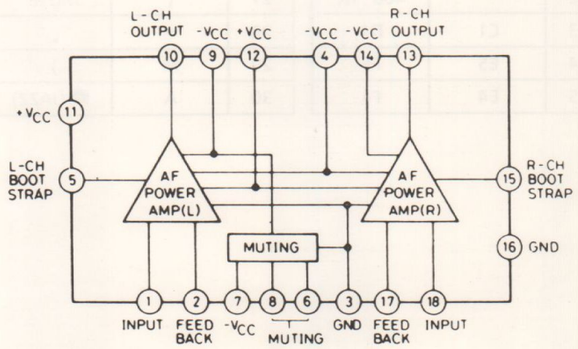

IC BLOCK DIAGRAM (AMPLIFIER)

IC702 · 802 BU4051B (3-Input 8-Channel Multiplexer / De-Multiplexer)

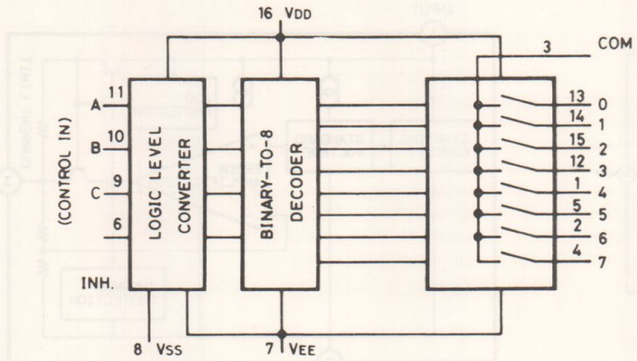

TRUTH TABLE

CONTROL INPUTS				{ON} CHANNEL
INHIBIT	C	B	A	4051
L	L	L	L	0
L	L	L	H	1
L	L	H	L	2
L	L	H	H	3
L	H	L	L	4
L	H	L	H	5
L	H	H	L	6
L	H	H	H	7
H	X	X	X	NONE
X : DON'T CARE				

IC701 · 703 · 704 · 706 · 711 LA6458S (Dual Operational Amplifier)

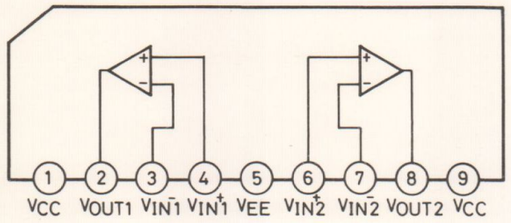

IC705 LC7522 (7-Segment Electronic Variable Resistor)

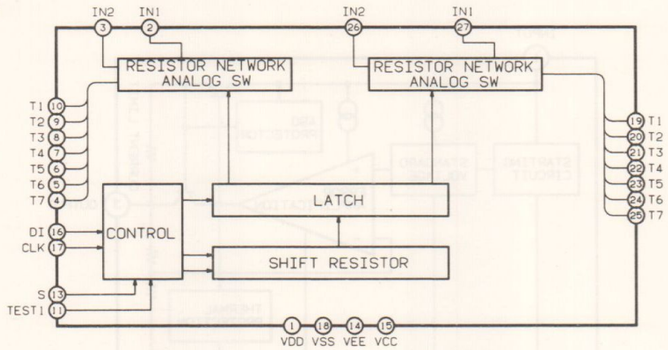

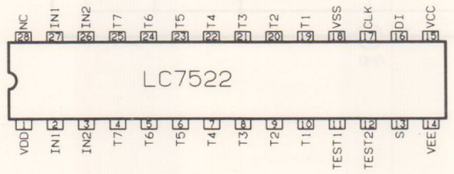

IC707 LB1641 (Volume Motor Driver)

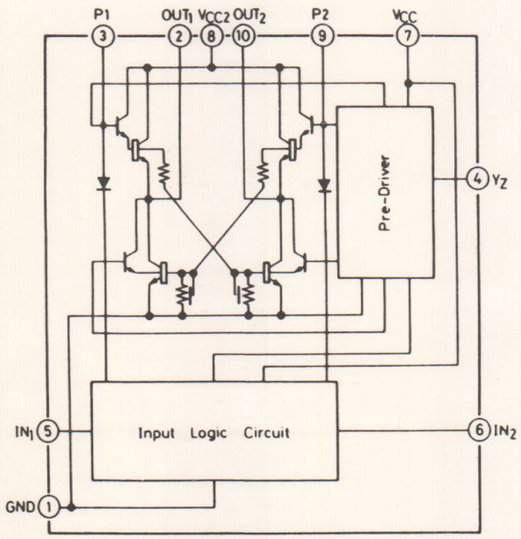

Input		Output		Action
IN_1	IN_2	OUT_1	OUT_2	
0	0	0	0	Brake
1	0	1	0	Normal (Reverse) Rotary
0	1	0	1	Reverse (Normal) Rotary
1	1	0	0	Brake

IC BLOCK DIAGRAM (AMPLIFIER)

IC900 · 903 L78OS12 (5-Terminal Voltage Regulator)

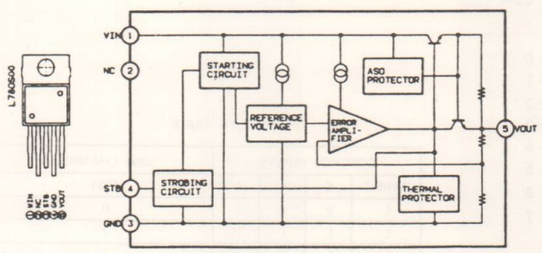

IC901 L78M05 (3-Terminal Voltage Regulator)

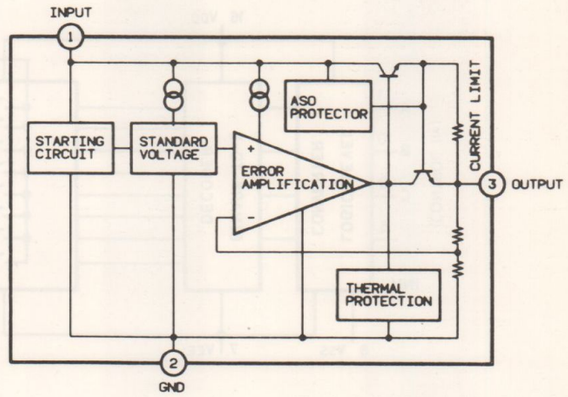

IC902 L7812ML (3-Terminal Voltage Regulator)

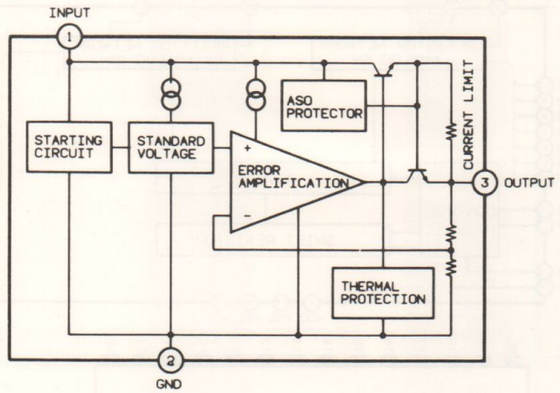

LCD (SPECTRUM ANALYZER)

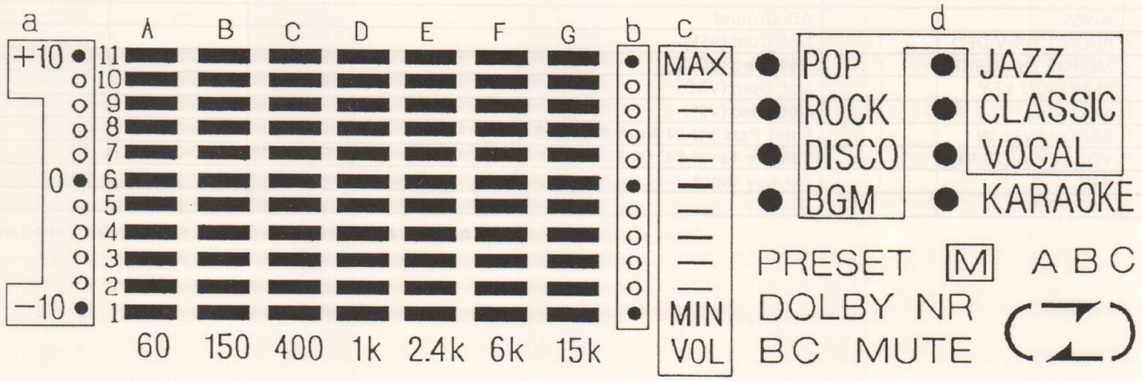

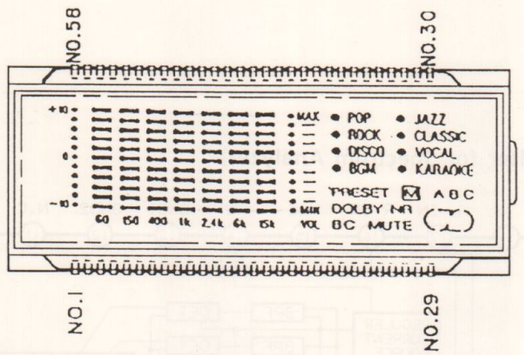

NO.	COM. 1	COM. 2
1		a
2	A5	B5
3	A4	B4
4	A3	B3
5	A2	B2
6	A1	B1
7		60 · 150
8	C5	D5
9	C4	D4
10	C3	D3
11	C2	D2
12		400 · 1K
13	C1	D1
14	E5	F5
15	E4	F4

NO.	COM. 1	COM. 2
16	E3	F3
17		2.4K · 6K
18	E2	F2
19	E1	F1
20	G4	B (DOLBY)
21	G3	C (DOLBY)
22	G1	15K
23	G2	c
24		b
25	G5	DOLBY NR
26	G6	PRESET
27	(	MUTE
28	→	←
29	M	)
30	A	● (JAZZ)

NO.	COM. 1	COM. 2
31	B	● (CLAS)
32	C	● (VOCA)
33	KARAOKE	● (KARA)
34	G7	d
35	G8	● (BGM)
36	G9	● (DISC)
37	G10	● (ROCK)
38	G11	● (POP)
39	E8	F8
40	E9	F9
41	E10	F10
42	E11	F11
43	E7	F7
44	E6	F6
45	C9	D9

NO.	COM. 1	COM. 2
46	C9	D9
47	C10	D10
48	C11	D11
49	C8	D8
50	C7	D7
51	C6	D6
52	A10	B10
53	A11	B11
54	A8	B8
55	A7	B7
56	A6	B6
57	COM. 1	
58		COM. 2

SCHEMATIC DIAGRAM (FRONT)

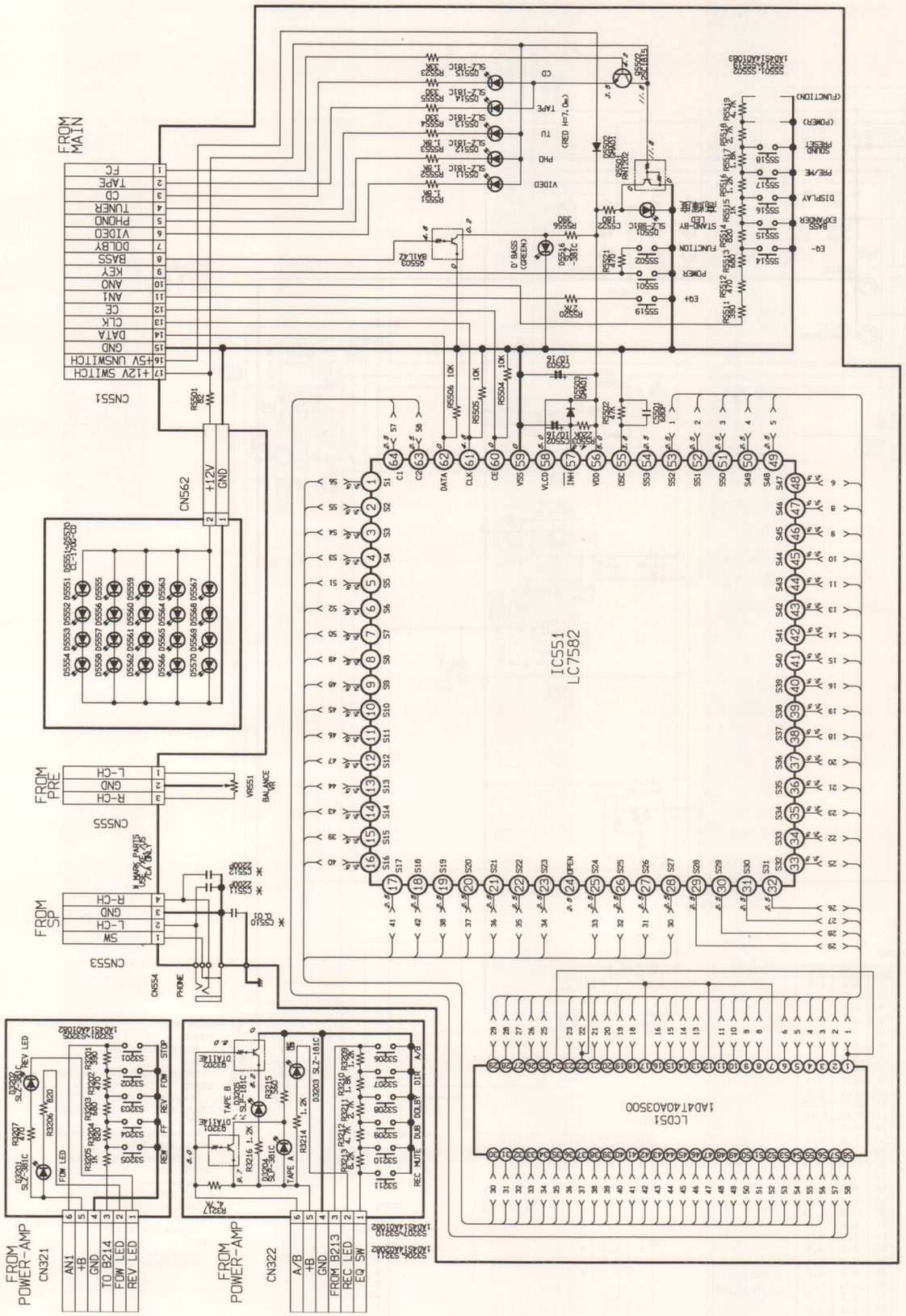

SCHEMATIC DIAGRAM (TAPE MECHANISM)

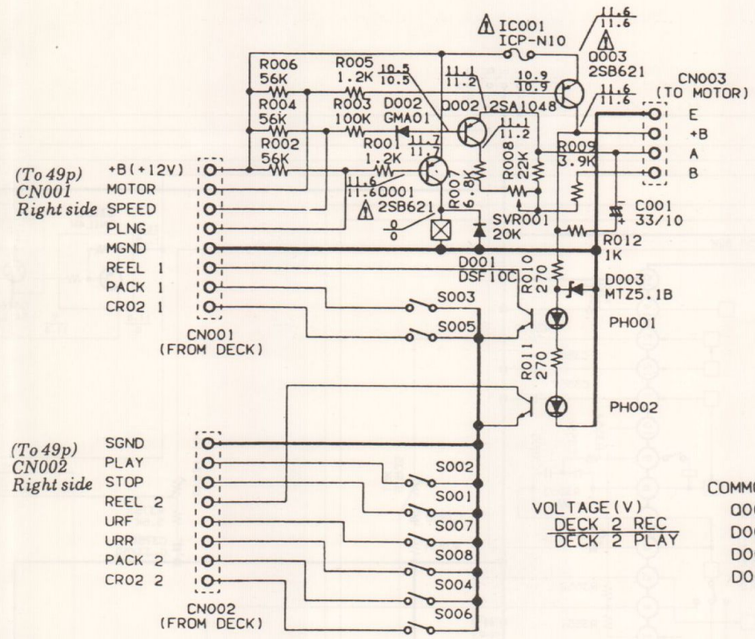

PH001 002
SPI33534C
S001 002
1AD4S12A02000
S003~008
1AD4S13A01800

COMMON USE
Q002 2SA1048or2SA933
D001 DSF10Cor1SR35
D002 GMA01or1SS133
D003 MTZ5.1BorGZS5.1Y

S001 STOP SW
S002 PLAY SW
S003 DECK 1 PACK SW
S004 DECK 2 PACK SW
S005 DECK 1 CR02 SW
S006 DECK 2 CR02 SW
S007 DECK 2 UNREC F SW
S008 DECK 2 UNREC R SW

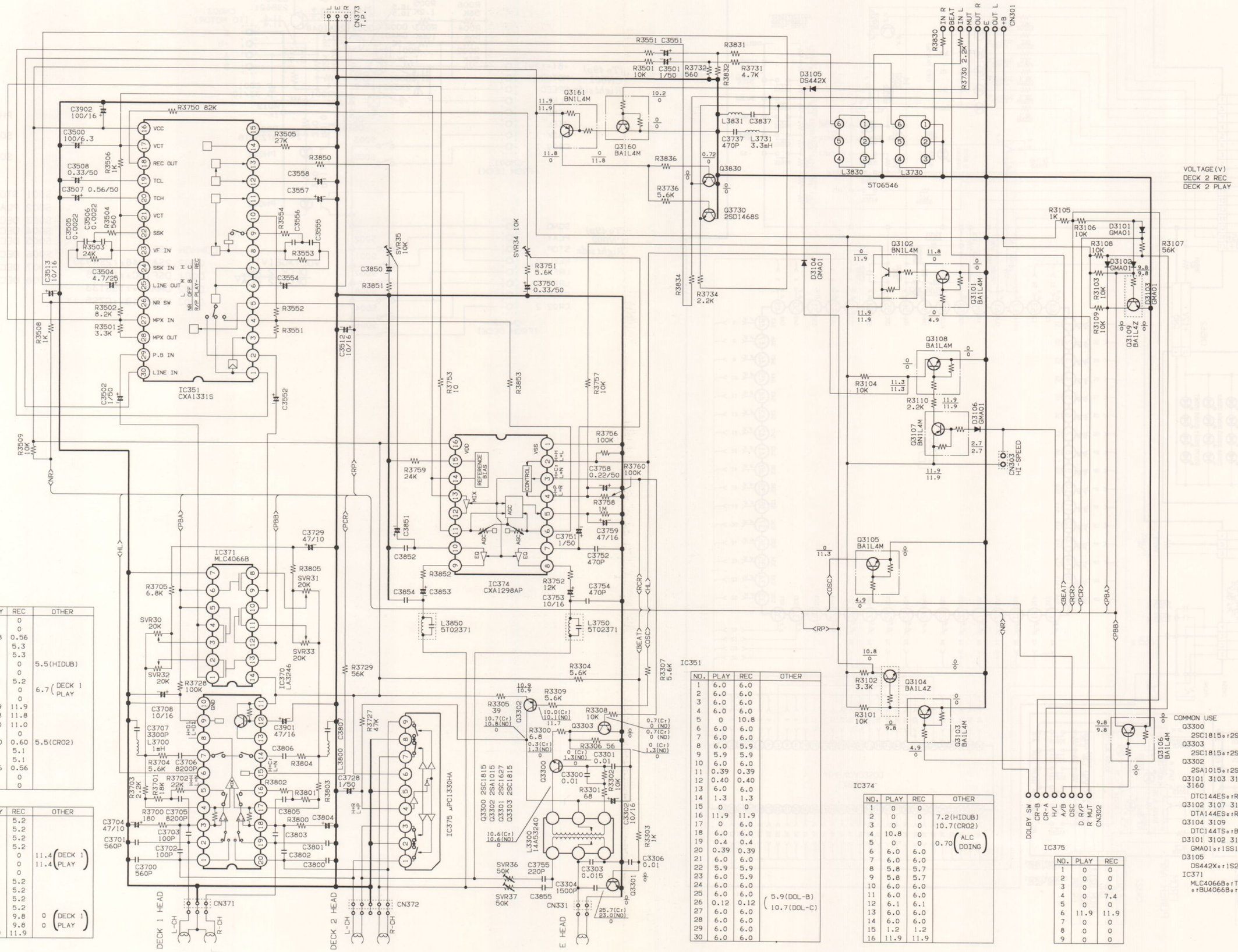

IC370

NO.	PLAY	REC	OTHER
1	0	0	
2	0	0	
3	0.58	0.56	
4	5.3	5.3	
5	5.3	5.3	
6	0	0	5.5(HIDUB)
7	0	0	
8	5.2	5.2	
9	0	0	6.7 (DECK 1 PLAY)
10	0	0	
11	11.9	11.9	
12	11.8	11.8	
13	11.0	11.0	
14	0	0	
15	0.60	0.60	5.5(CRO2)
16	5.1	5.1	
17	5.1	5.1	
18	0.56	0.56	
19	0	0	
20	0	0	

IC731

NO.	PLAY	REC	OTHER
1	5.2	5.2	
2	5.2	5.2	
3	5.2	5.2	
4	5.2	5.2	
5	0	0	11.4 (DECK 1 PLAY)
6	0	0	11.4
7	0	0	
8	5.2	5.2	
9	5.2	5.2	
10	5.2	5.2	
11	5.2	5.2	
12	9.8	9.8	0 (DECK 1 PLAY)
13	9.8	9.8	0
14	11.9	11.9	

IC351

NO.	PLAY	REC	OTHER
1	6.0	6.0	
2	6.0	6.0	
3	6.0	6.0	
4	6.0	6.0	
5	0	10.8	
6	6.0	6.0	
7	6.0	6.0	
8	6.0	5.9	
9	5.9	5.9	
10	6.0	6.0	
11	0.39	0.39	
12	0.40	0.40	
13	6.0	6.0	
14	1.3	1.3	
15	0	0	
16	11.9	11.9	
17	0	6.0	
18	6.0	6.0	
19	0.4	0.4	
20	0.39	0.39	
21	6.0	6.0	
22	5.9	5.9	
23	6.0	5.9	
24	6.0	6.0	
25	6.0	6.0	
26	0.12	0.12	(5.9(DOL-B) 10.7(DOL-C))
27	6.0	6.0	
28	6.0	6.0	
29	6.0	6.0	
30	6.0	6.0	

IC374

NO.	PLAY	REC	OTHER
1	0	0	
2	0	0	7.2(HIDUB)
3	0	0	10.7(CRO2)
4	10.8	0	0.70 (ALC DOING)
5	0	0	
6	6.0	6.0	
7	6.0	6.0	
8	5.8	5.7	
9	5.8	5.7	
10	6.0	6.0	
11	6.0	6.0	
12	6.1	6.1	
13	6.0	6.0	
14	6.0	6.0	
15	1.2	1.2	
16	11.9	11.9	

IC375

NO.	PLAY	REC
1	0	0
2	0	0
3	0	0
4	0	7.4
5	0	0
6	11.9	11.9
7	0	0
8	0	0
9	0	0

COMMON USE
Q3300
2SC1815 or 2SC945
Q3303
2SC1815 or 2SC945 or 2SC1740S
Q3302
2SA1015 or 2SA733
Q3101 3103 3105 3106 3108 3160
DTC144ES or RN1204 or BA1L4M
Q3102 3107 3161
DTA144ES or RN2204 or BN1L4M
Q3104 3109
DTC144TS or BA1L4Z
D3101 3102 3103 3104 3105
GMA01 or 1SS133
D3105
DS442X or 1S2473
IC371
MLC4066B or TC4066BP
or BU4066B or μPD4066BC

PCS 67 749

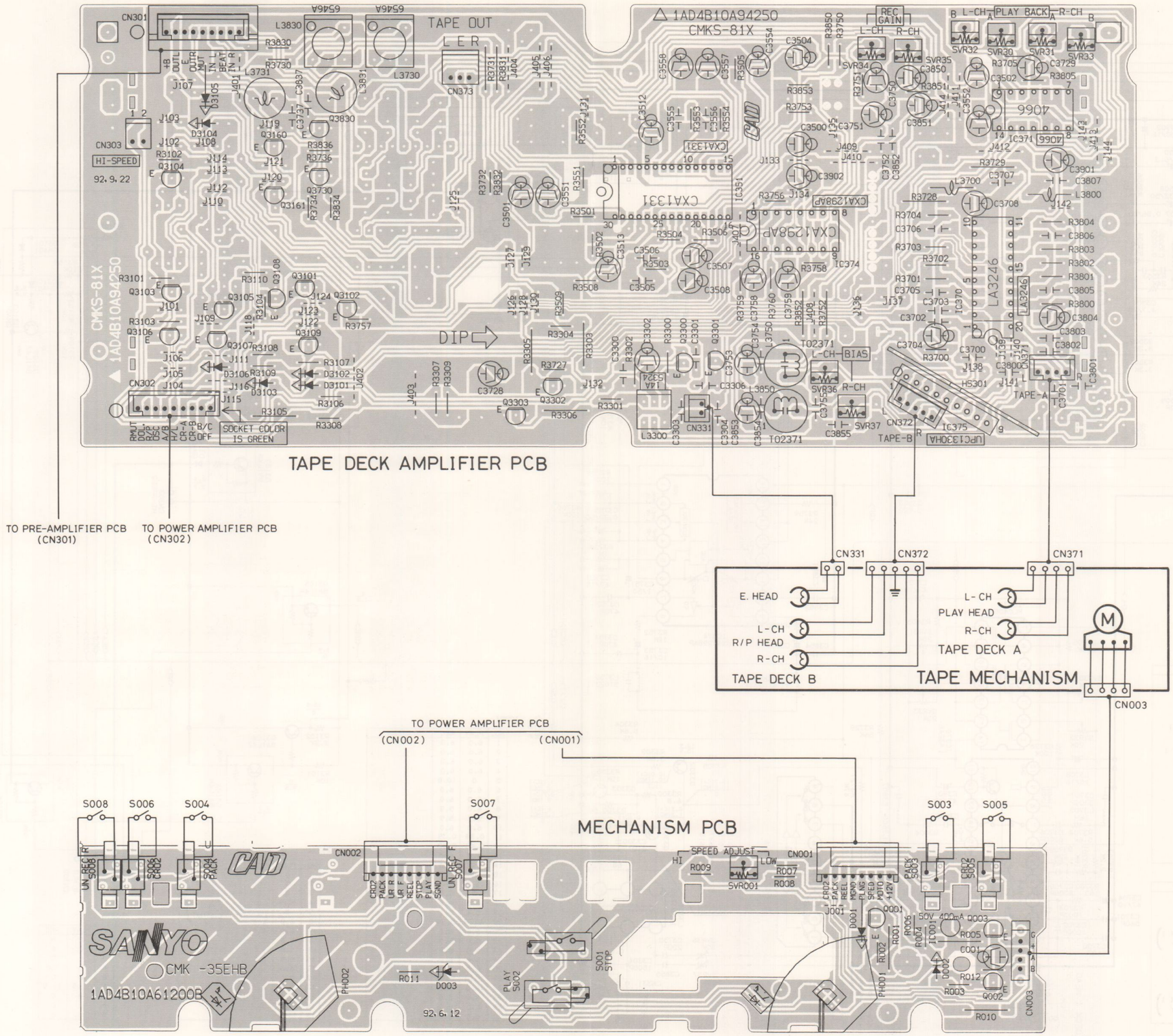

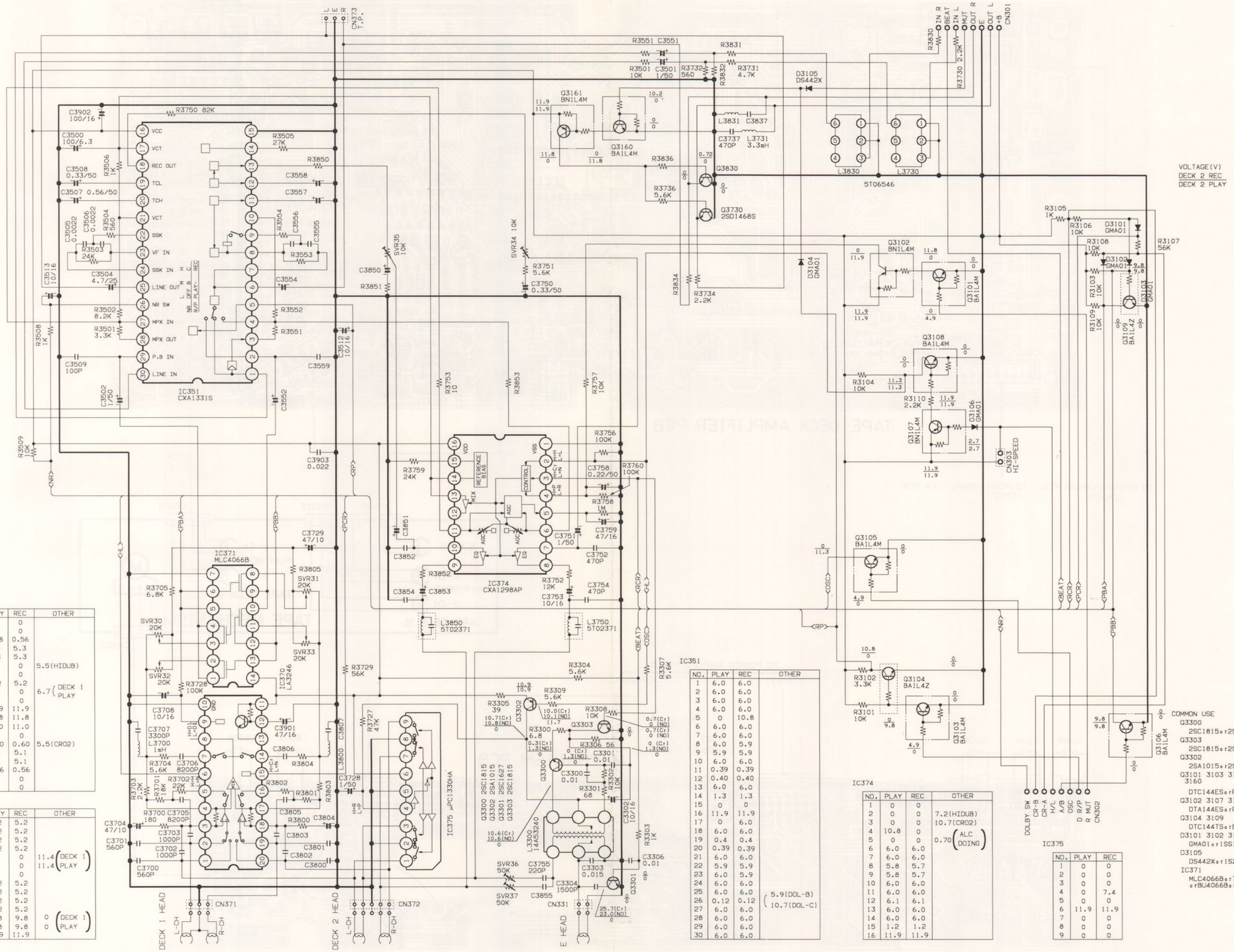

IC370

NO.	PLAY	REC	OTHER
1	0	0	
2	0	0	
3	0.58	0.56	
4	5.3	5.3	
5	5.3	5.3	
6	0	0	5.5(HIDUB)
7	0	0	
8	5.2	5.2	
9	0	0	6.7 (DECK 1 PLAY)
10	0	0	
11	11.9	11.9	
12	11.8	11.8	
13	11.0	11.0	
14	0	0	
15	0.60	0.60	5.5(CRO2)
16	5.1	5.1	
17	5.1	5.1	
18	0.56	0.56	
19	0	0	
20	0	0	

IC731

NO.	PLAY	REC	OTHER
1	5.2	5.2	
2	5.2	5.2	
3	5.2	5.2	
4	5.2	5.2	
5	0	0	11.4 (DECK 1 PLAY)
6	0	0	11.4
7	0	0	
8	5.2	5.2	
9	5.2	5.2	
10	5.2	5.2	
11	5.2	5.2	
12	9.8	9.8	0 (DECK 1 PLAY)
13	9.8	9.8	0
14	11.9	11.9	

IC351

NO.	PLAY	REC	OTHER
1	6.0	6.0	
2	6.0	6.0	
3	6.0	6.0	
4	6.0	6.0	
5	0	10.8	
6	6.0	6.0	
7	6.0	6.0	
8	6.0	5.9	
9	5.9	5.9	
10	6.0	6.0	
11	0.39	0.39	
12	0.40	0.40	
13	6.0	6.0	
14	1.3	1.3	
15	0	0	
16	11.9	11.9	
17	0	6.0	
18	6.0	6.0	
19	0.4	0.4	
20	0.39	0.39	
21	6.0	6.0	
22	5.9	5.9	
23	6.0	5.9	
24	6.0	6.0	
25	6.0	6.0	5.9(DOL-B)
26	0.12	0.12	10.7(DOL-C)
27	6.0	6.0	
28	6.0	6.0	
29	6.0	6.0	
30	6.0	6.0	

IC374

NO.	PLAY	REC	OTHER
1	0	0	
2	0	0	7.2(HIDUB)
3	0	0	10.7(CRO2)
4	10.8	0	
5	0	0	0.70 (ALC DOING)
6	6.0	6.0	
7	6.0	6.0	
8	5.8	5.7	
9	5.8	5.7	
10	6.0	6.0	
11	6.0	6.0	
12	6.1	6.1	
13	6.0	6.0	
14	6.0	6.0	
15	1.2	1.2	
16	11.9	11.9	

IC375

NO.	PLAY	REC
1	0	0
2	0	0
3	0	0
4	0	7.4
5	0	0
6	11.9	11.9
7	0	0
8	0	0
9	0	0

COMMON USE
Q3300
2SC1815 or 2SC945
Q3303
2SC1815 or 2SC945 or 2SC1740S
Q3302
2SA1015 or 2SA733
Q3101 3103 3105 3106 3108 3160
DTC144ES or RN1204 or BA1L4M
Q3102 3107 3161
DTA144ES or RN2204 or BN1L4M
Q3104 3109
DTC144TS or BA1L4Z
D3101 3102 3103 3104 3105
GMA01 or 1SS133
D3105
DS442X or 1S2473
IC371
MLC4066B or TC4066BP or BU4066B or μPD4066BC

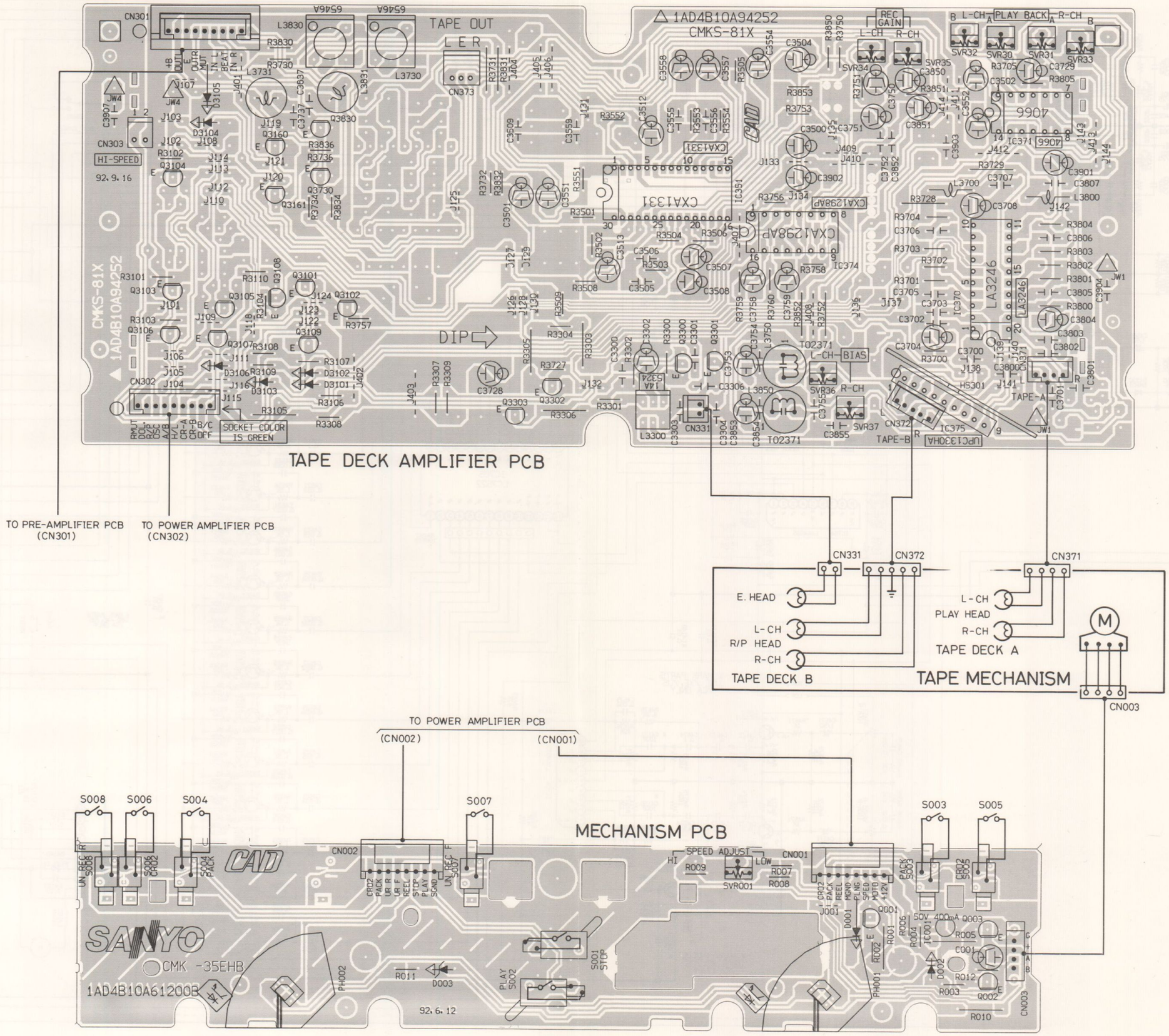

SCHEMATIC DIAGRAM (PRE-AMPLIFIER)

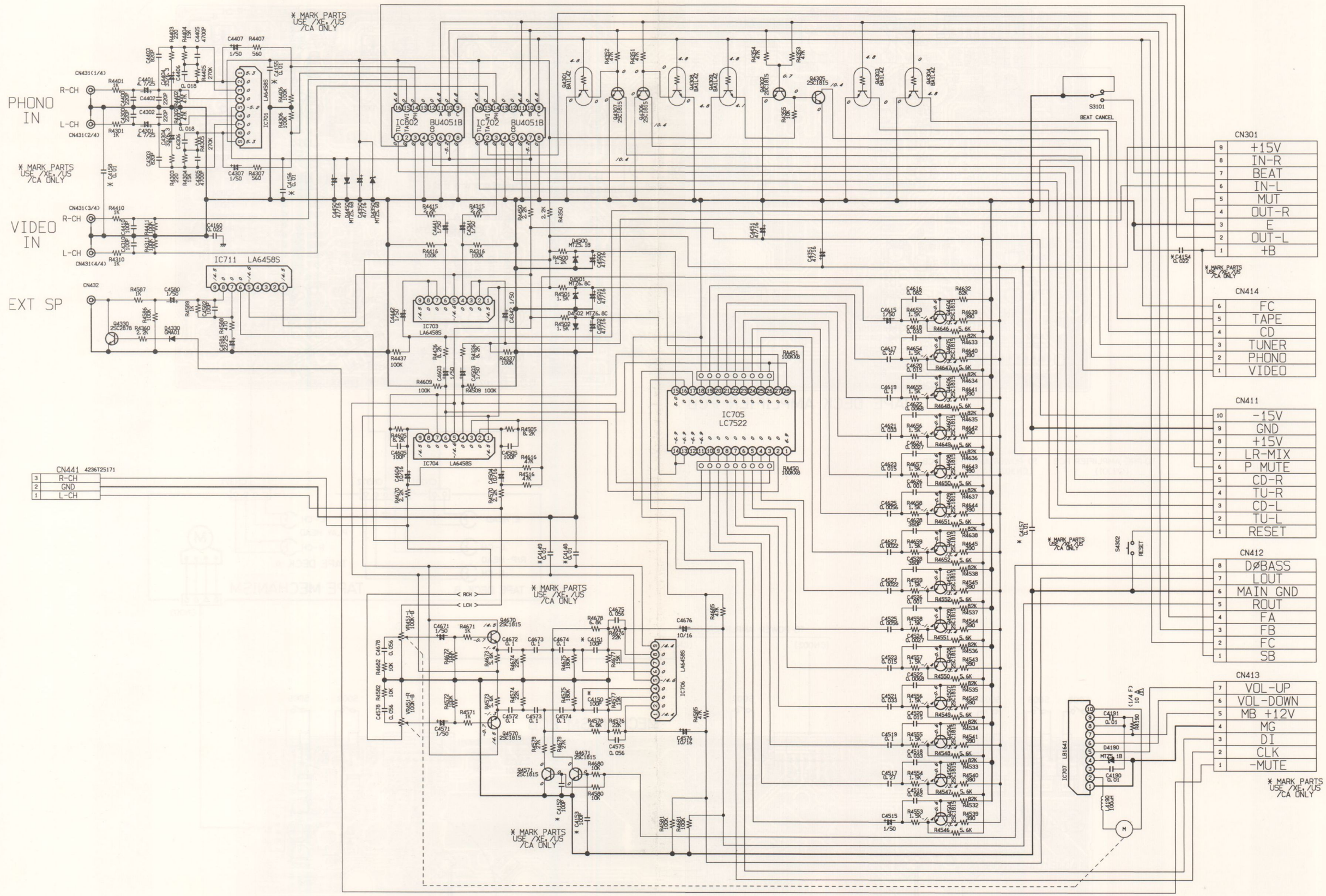

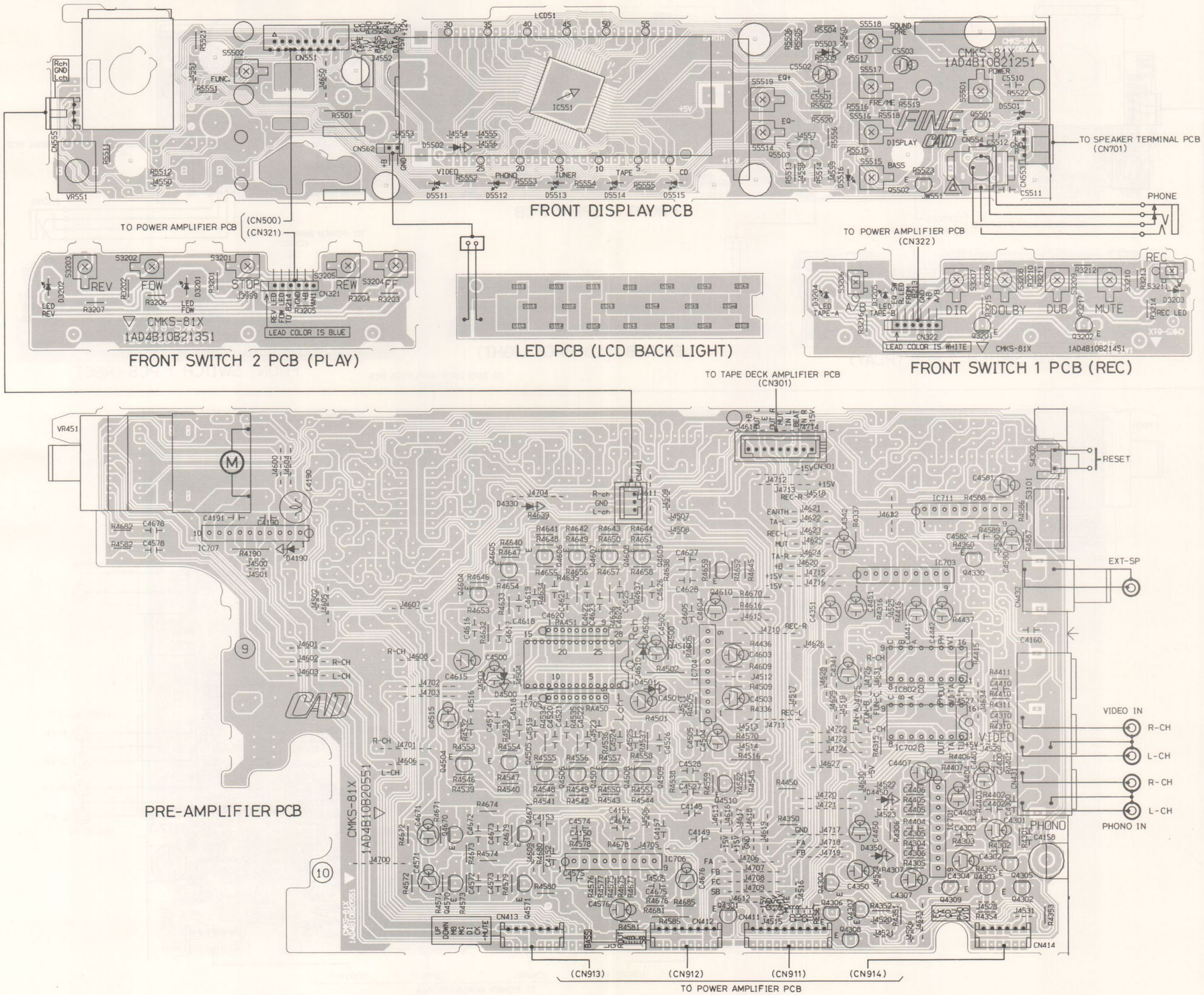

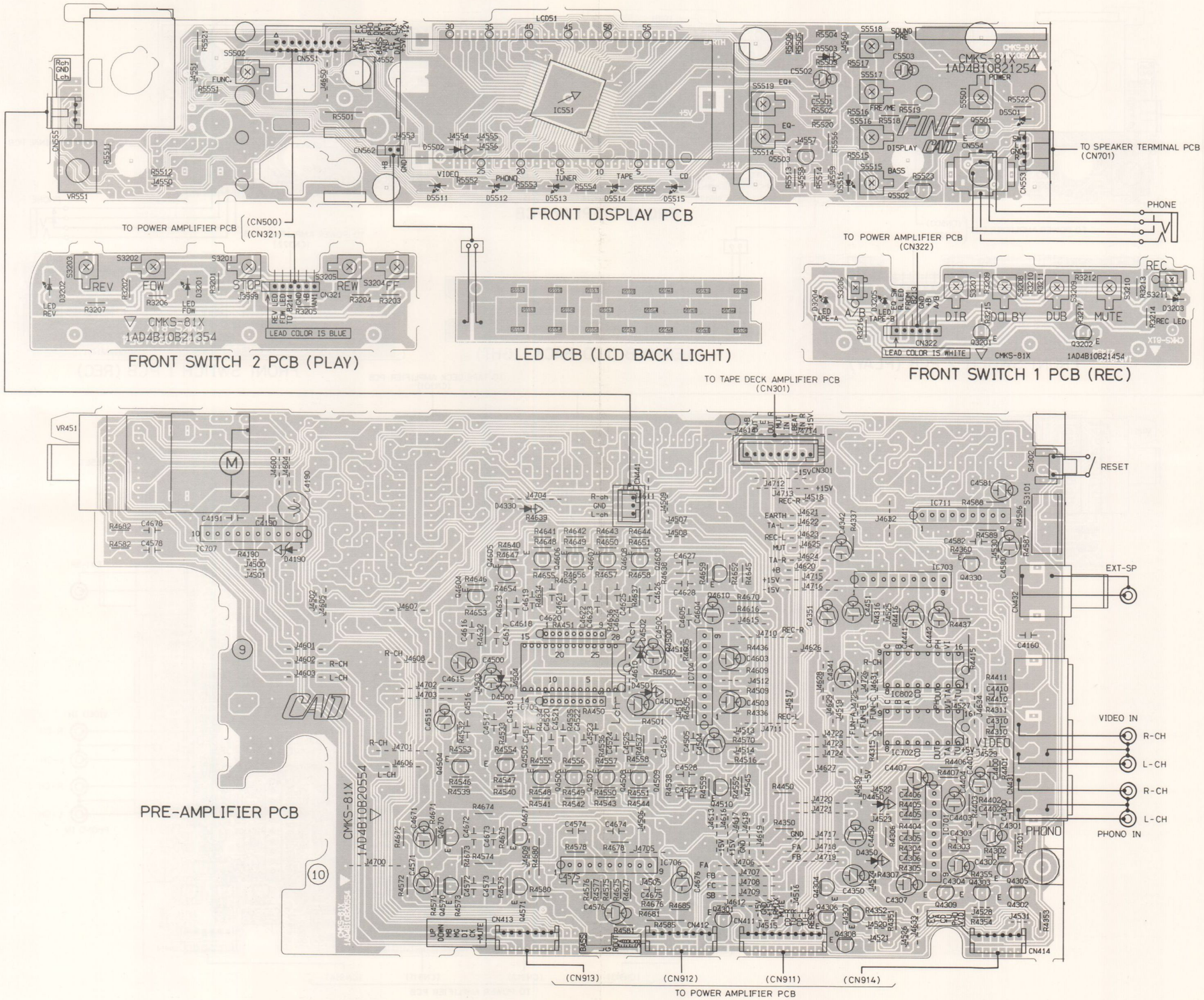

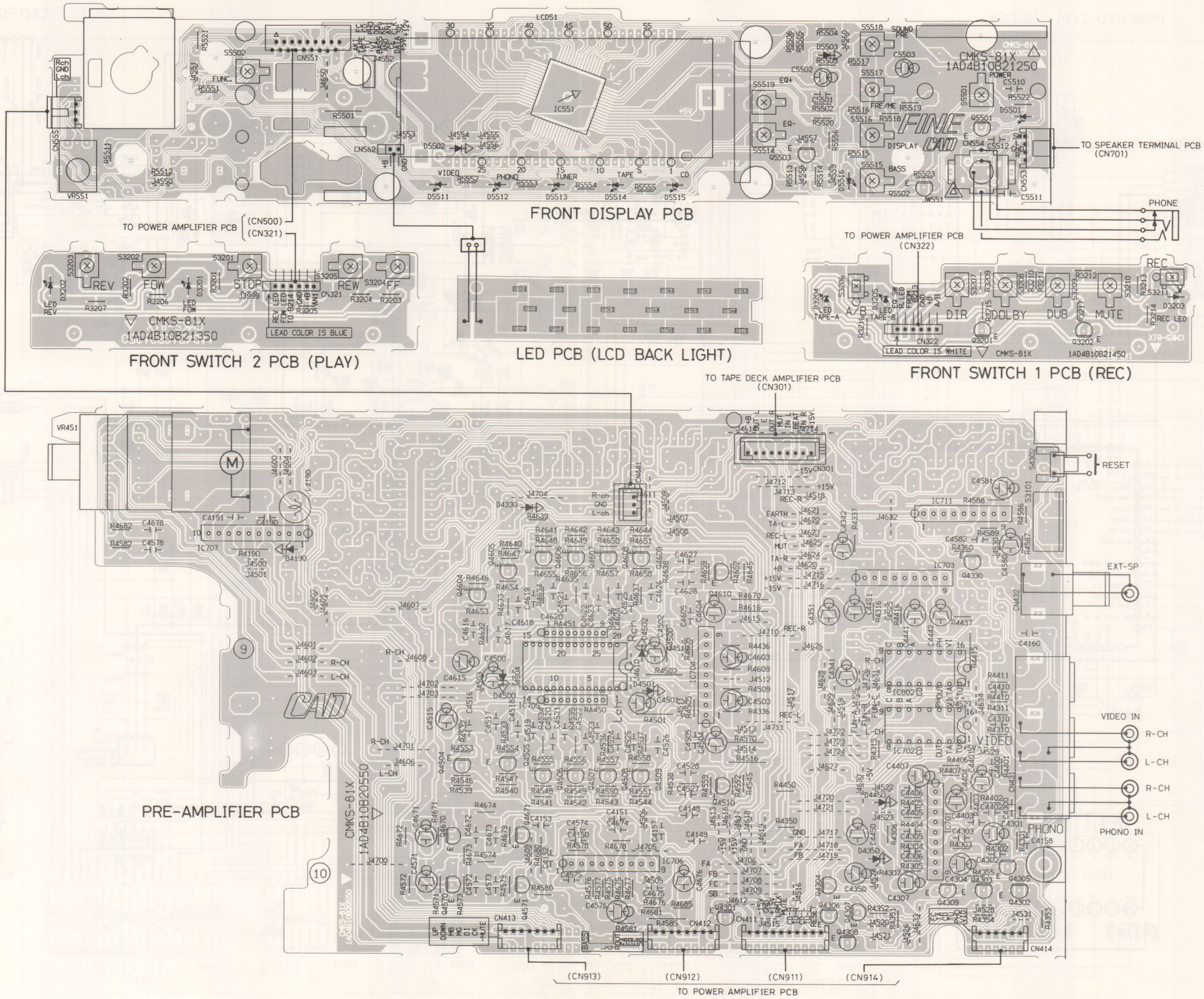

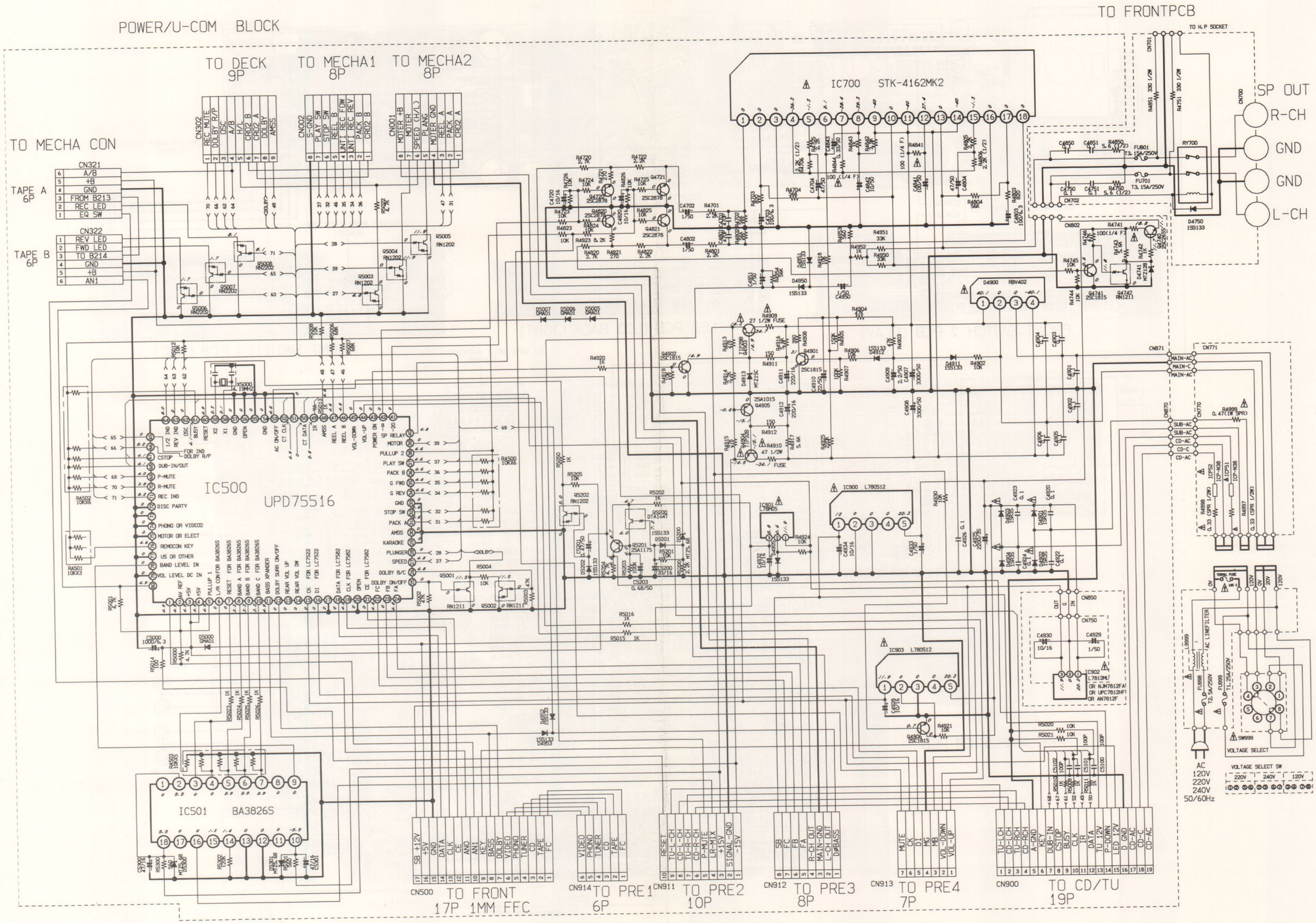

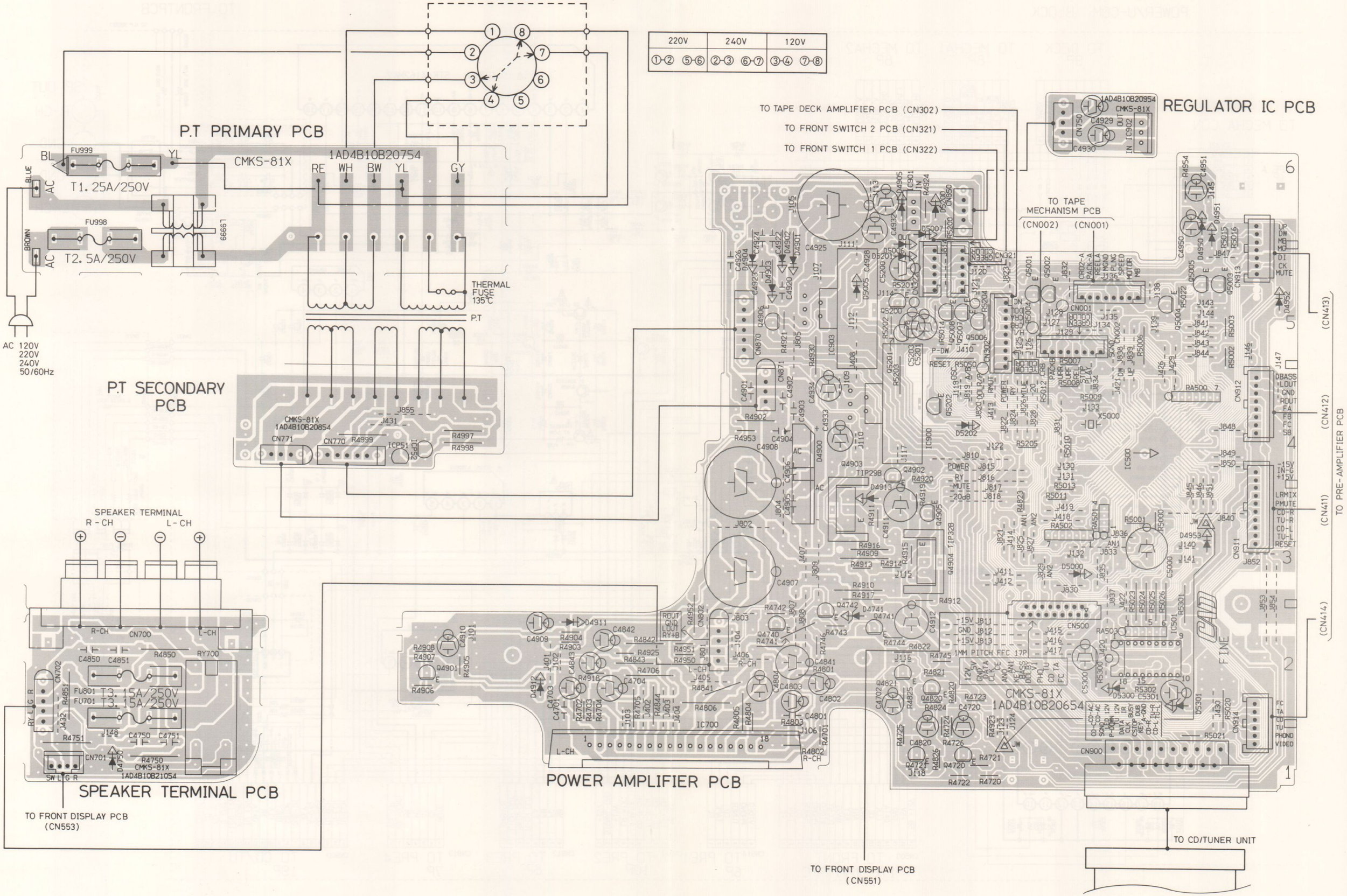

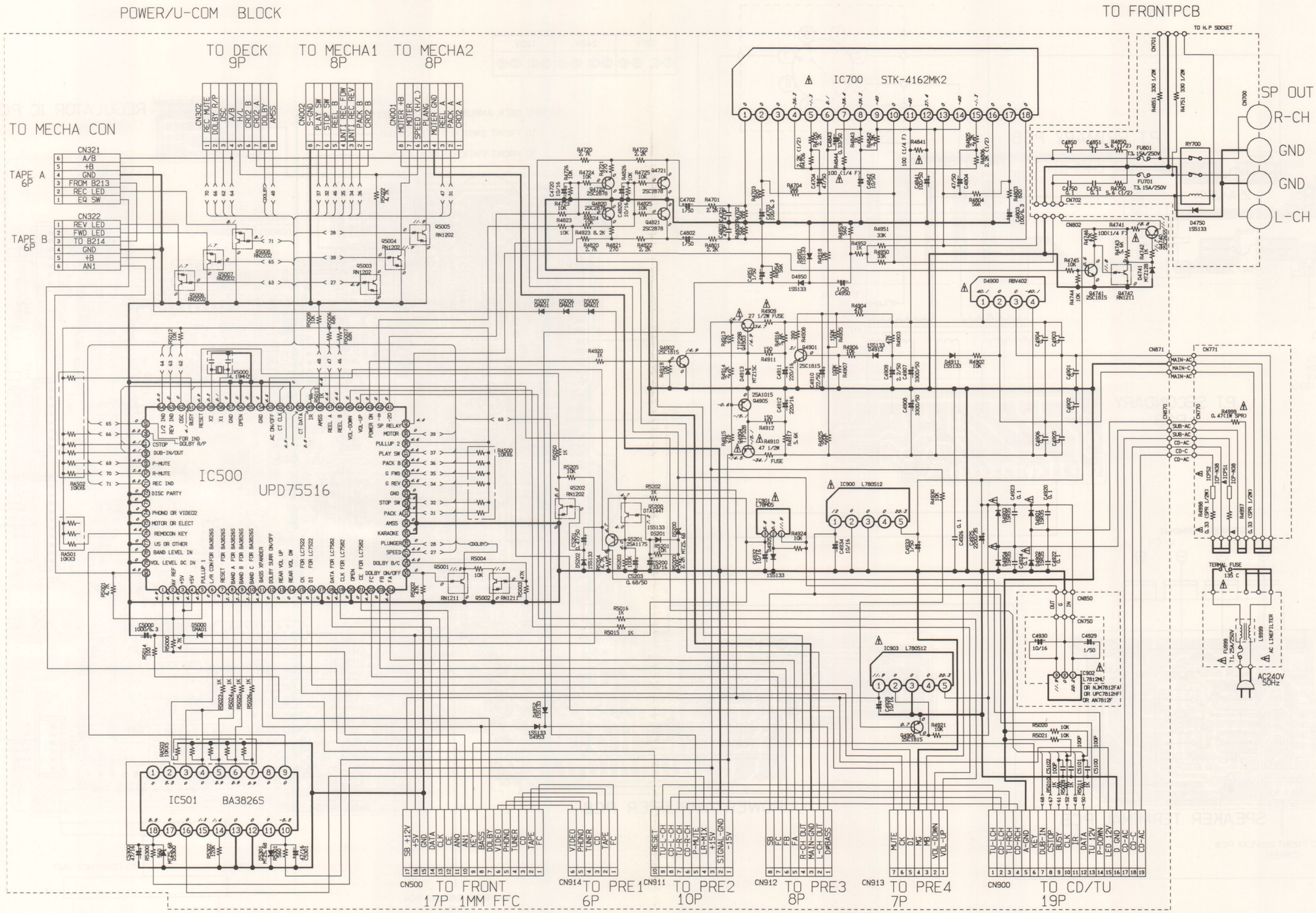

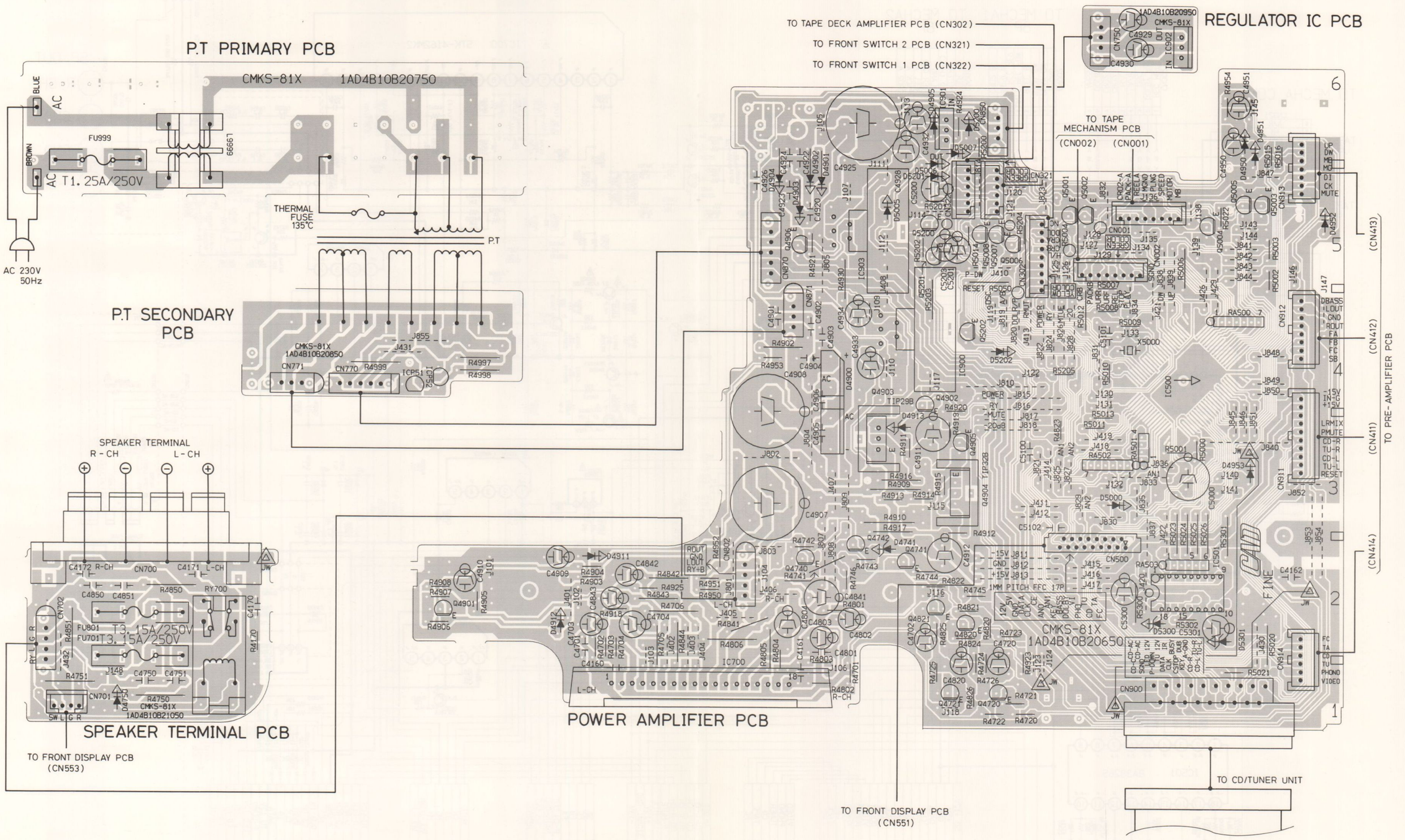

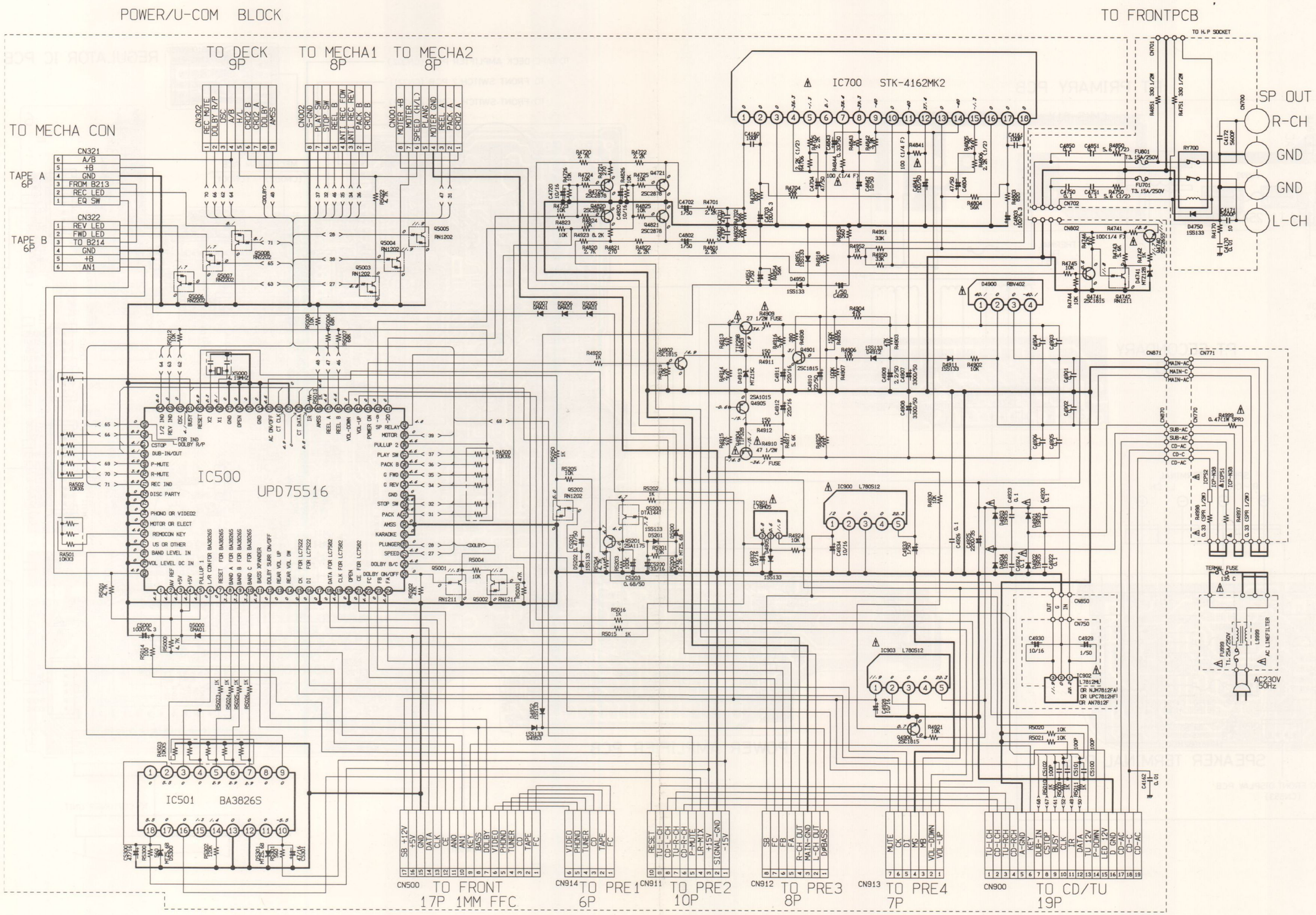

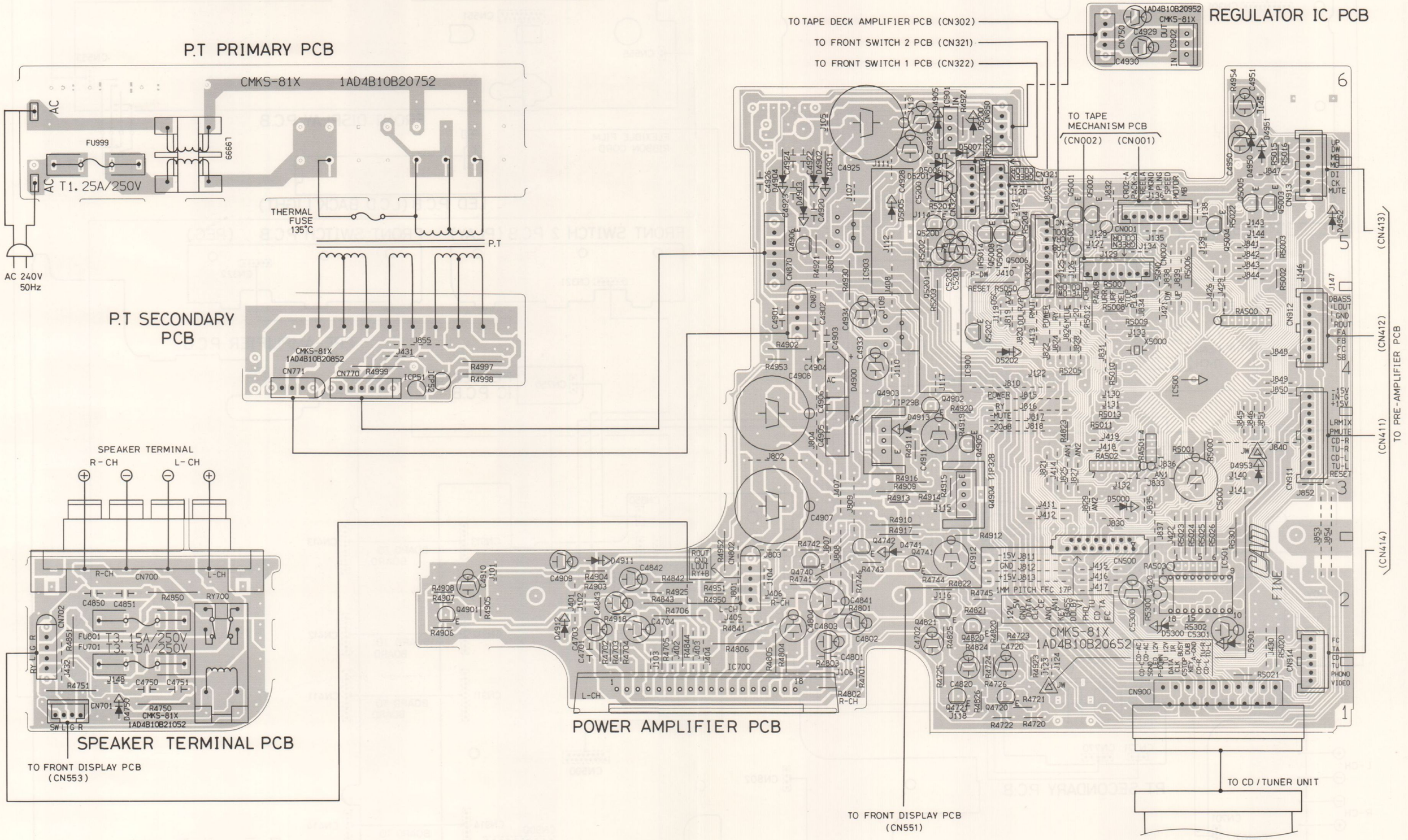

WIRING CONNECTION (TAPE DECK / AMPLIFIER UNIT)

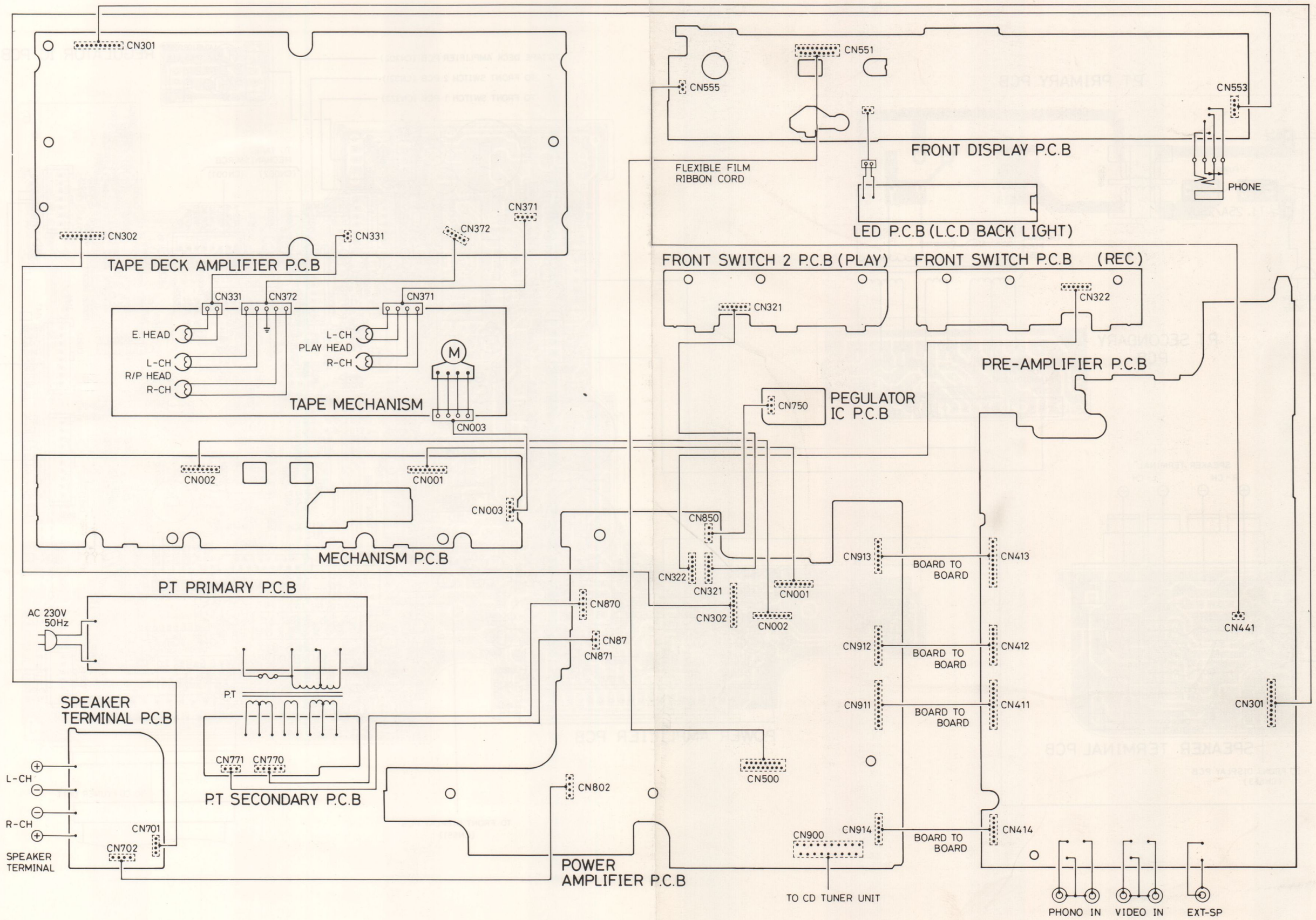

PCS 67 763