Service Manual

74 MX820 / 00B

Mini mini compo

TABLE OF CONTENTS

marantz®

model MX820

First issue : 1992

4822 725 51001

MARANTZ DESIGN AND SERVICE

Using superior design and selected high grade components, MARANTZ company has created the ultimate in stereo sound.
Only **original MARANTZ parts** can insure that your MARANTZ product will continue to perform to the specifications for which it is famous.

Parts for your MARANTZ equipment are generally available to our National Marantz Subsidiary or Agent.

ORDERING PARTS:

Parts can be ordered either by mail or by telex. In both cases, correct part number has to be specified.
The following information must be supplied to eliminate delays in processing your order:

1. Complete address
2. Complete part numbers and quantities required
3. Description of parts
4. Model number for which part is required
5. Way of shipment
6. Signature: any order form or telex must be signed otherwise such part order will be considered as null and void.

MARANTZ INTERNATIONAL
Vestdijk 9
5600 MD Eindhoven
The Netherlands
Phone: +31/40.758290
Telefax: +31/40.75.82.99
Telex: 35000 PHTC NL routing IND NLMTFAT

PARTS ORDERING

Parts may be ordered at the following addresses:

AUSTRIA
HORNYPHON
Vertriebsgesellschaft GmbH
Wienerbergstrasse 1
A 1101 Wien
Austria
Telex: 132.332

BELGIUM
SVD DIVISION MARANTZ
Industrialaan 1
1720 Groot-Bijgaarden
Belgium
Telex: 24466

CHILE
MARANTZ
DIVISION OF PHILIPS S.A.
AV. Santa Maria, 0760
Casilla 2687
Santiago
Telex: 240.239

DENMARK
MARANTZ
DIVISION OF PHILIPS
SERVICE A/S
Prags Boulevard 80
Postbox 1919
DK-2300 København S
Denmark
Telex: 31201

FINLAND
MARANTZ
DIVISION OF OY PHILIPS Ab
Kaivokatu 8
00100 Helsinki
Finland
Telex: 124811

FRANCE
MARANTZ FRANCE
4 Rue Bernard Palissy
92600 Asnières
France
Telex: 611651

GERMANY
MARANTZ GERMANY GmbH
Alexanderstrasse 1
2000 Hamburg
Germany

THE NETHERLANDS
Elpro Marantz
Wint Hontlaan 28
3526 KV Utrecht
The Netherlands
Telex: 4748

NORWAY
MARANTZ
DIVISION OF PHILIPS A/S
Sandstuveien 40
0680 Oslo 6
Norway
Telex: 72640

GREAT BRITAIN
MARANTZ AUDIO U.K. Ltd
Unit 15/16
Saxon Way Industrial Estate
Moor Lane
Harmondsworth UB7 OLW
Great Britain
Telex: 935196

GREECE
SHERTON ELECTRONICS S.A.
P.O.Box 21025
Hippocratus Street 188
Athens 11471
Greece
Telex: 216.795

JAPAN
MARANTZ JAPAN, Inc.
35-1, 7-chome, Sagamiono
Sagamihara-shi, Kanagawa
Japan

KUWAIT
AL ALAMIAH ELECTRONICS
Ussama Building
Fahd al Saleem Street
P.O.Box 23781
Safat-Kuwait
Telex: 22694

ITALY
MARANTZ ITALIANA S.P.A.
Via Chiese, 74
20126 Milano
Italy

SAUDI ARABIA
AL ALAMIAH ELECTRONICS
P.O.Box 5954
University Street
Riyadh 11432
Saudi Arabia
Telex: 401530

SOUTH AFRICA
MARANTZ
DIVISION OF PHILIPS S.A.
Main Road Martindale
P.O. Box. 58088
Newville 21114
South Africa

SPAIN
PHONO S.A.
Ignacio Iglesias 10
Badalona (Barcelona)
Spain
Telex: 59355

SWEDEN
MARANTZ
DIVISION OF PHILIPS
Försäljning AB
Tegeluddsvägen 1
S-115 84 Stockholm
Sweden
Telex: 14060

SWITZERLAND
MARANTZ
Technischer Service
Duenstrasse 3
3186 Düdingen
Switzerland

TURKEY
DOGRUOL Ltd.
I.M.C.
6 Blok N°6310
Unkapani
Istanbul
Turkey
Telex: 22085

MALTA
CACHIA & GALEA
Republic Street, 68D
Valetta
Telex: 1682

PORTUGAL
MARANTZ
Divisao philips S.A. service
Outurela-carnaxide
2795 LinDA-A-VELHA
Telex: 43906

All of the above locations are fully equipped to take care of your total service needs. Because various countries have differing configuration requirements, it is necessary that you contact the service facility in your particular country. In the event that there is no service location listed for your country, please, contact the nearest facility for the necessary assistance.

In case of difficulties, do not hesitate to contact the Technical Department at abovementioned address.

CONTROLS

REMOTE CONTROLLER UNIT

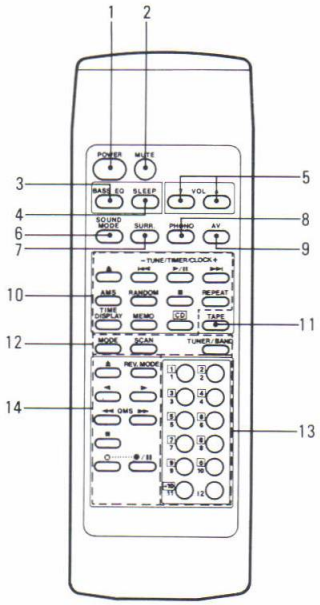

1. Power switch (POWER)
2. Audio muting switch (MUTE)
3. Bass EQ switch (BASS EQ)
4. Sleep timer switch (SLEEP)
5. Volume controls (▼ VOL ▲)
6. Sound mode select switch (SOUND MODE)
7. Surround switch (SURR.)
8. Phono function switch (PHONO)
9. AV function switch (AV)
10. CD player controls
    ▲ : Disc tray Open / Close switch
    - / ⏮⏭ / + : Skip / Search switches (These switches can also be used as Tune / Timer / Clock up / down switches.)
    ▶ / ❚❚ : Play / Pause switch
    AMS : Auto music scan switch
    RANDOM : Random play switch
    ■ : Stop switch
    REPEAT : Repeat play switch
    TIME DISPLAY : Time display switch
    MEMO : Memory switch (This switche can also be used as a Tune / Timer / Clock memory switch)
    CD : CD function switch
11. Tape function switch (TAPE)
12. Tuner controls
    MODE : Tuning / FM mode switch
    SCAN : Preset station scan switch
    TUNER / BAND : Tuner function / Band select switch
13. Number switches
    1 - 9, 0, +10 : For CD player
    1 - 12 : For tuner
14. Deck controls
    ▲ : Cassette tray open / close switch
    REV. MODE : Reverse mode switch
    ◀ ▶ : Play switches
    ◀◀ QMS ▶▶ : QMS / Fast wind switches
    ■ : Stop switch
    ○ : Record muting switch
    ● / ❚❚ : Record / Record pause switch

MAIN AMPLIFIER UNIT

1. Power indicator (POWER)
2. Output power level indicators (OUTPUT POWER LEVEL)

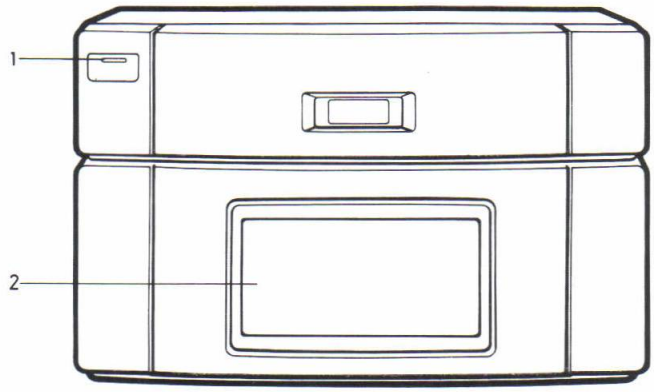

OPERATING THE RESET SWITCH

This CD / TUNER and TAPE DECK / PRE-AMPLIFIER unit is provided with a reset switch on the rear panel. The reset switch serves to initialize the microprocessor in the each units which controls the CD, TUNER, TAPE DECK and etc block. If the unit is to be serviced or key input is not acknowledged even when the CD / TUNER, TAPE DECK and etc. operation buttons are pressed, press the RESET switch and initialize the microprocessor following the step below.

1). Disconnect the AC power cord from the power outlet.
2). Keep the RESET switch depressed for 60 seconds.
    (The backed up electrolytic capacitor is discharged by keeping the RESET switch depress.)
3). Reconnect the AC power cord to the power outlet.
4). Press the CD / TUNER, TAPE DECK and etc. operations, and check their operation.

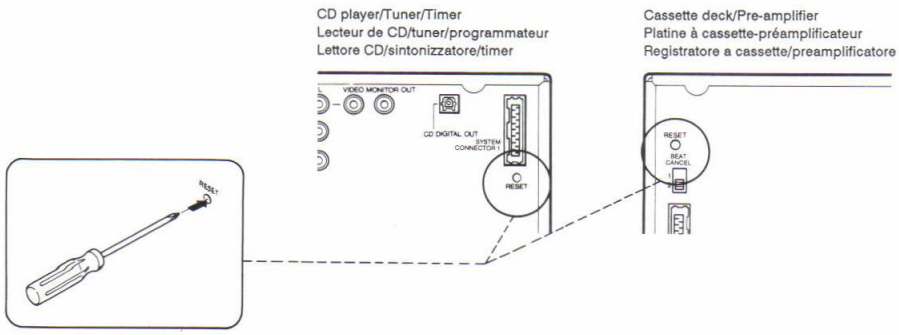

PARTS LIST (ACCESSORIES, REMOCON & SPEAKER)

PRODUCT SAFETY NOTICE

Each precaution in this manual should be followed during servicing. Components identified with the IEC symbol ⚠ in the parts list and the schematic diagram designate components in which safety can be of special significance. When replacing a component identified ⚠, use only the replacement parts designated, or parts with the same ratings of resistance, wattage or voltage that are designated in the parts list in this manual. Leakage-current or resistance measurements must be made to determine that exposed parts are acceptably insulated from the supply circuit before returning the product to the customer.

CAUTION: Regular type resistors and capacitors are not listed. To know those values, refer to the schematic diagram.

ACCESSORIES

Ref. No.	Part No.	Description
		INSTRUCTION MANUAL
	4822 267 31371	ASSY,CONNECTOR-P,15P, CD/TUNER TO DECK/PRE-AMP
	4822 303 30433	LOOP ANTENNA,AM
	4822 502 30673	SCR WOOD RND 3.1X13,AM ANT
	4822 303 50062	ANTENNA,FM

REMOTE CONTROLLER UNIT

REMOCON (RC820MX)

Ref. No.	Part No.	Description
	4822 218 10477	REMOTE CONTROLLER

SPEAKER UNIT

SPEAKER (SX-MX820)

Ref. No.	Part No.	Description
		SPEAKER UNIT

DISASSEMBLY

1. CABINET, FRONT & REAR PANEL

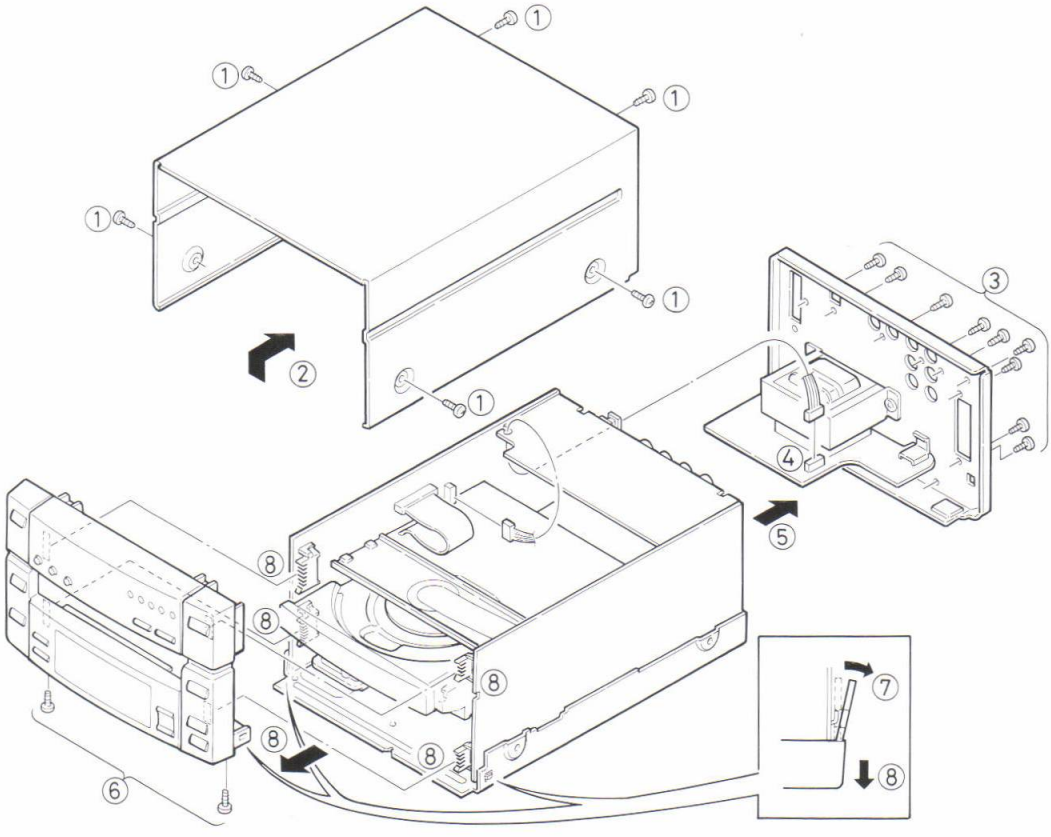

2. P. C. BOARD

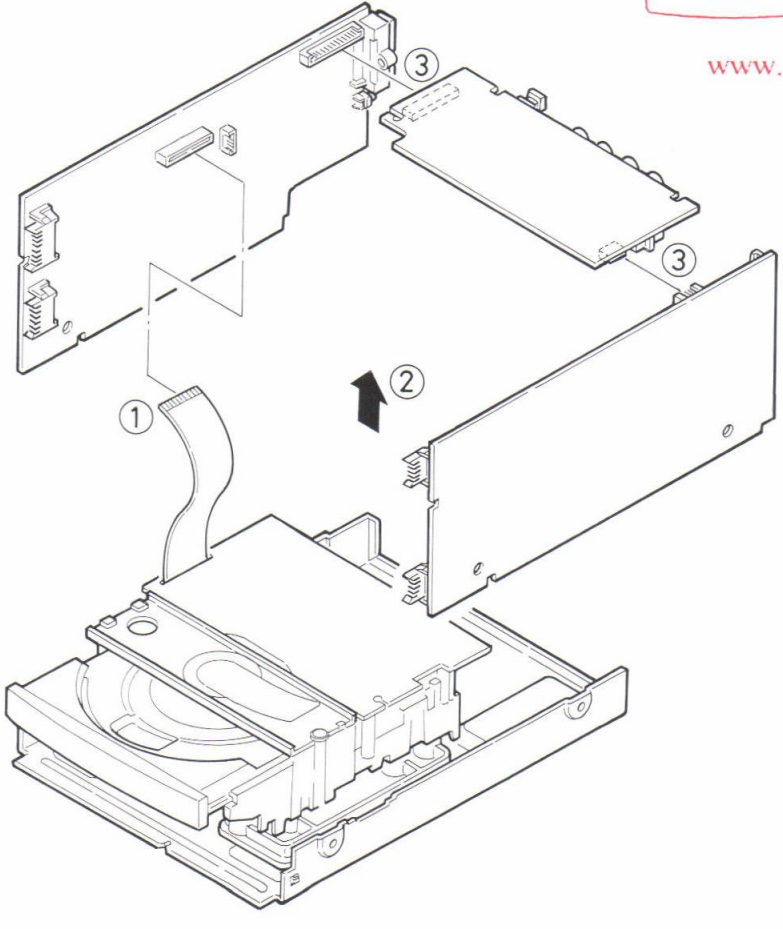

3. CD MECHANISM

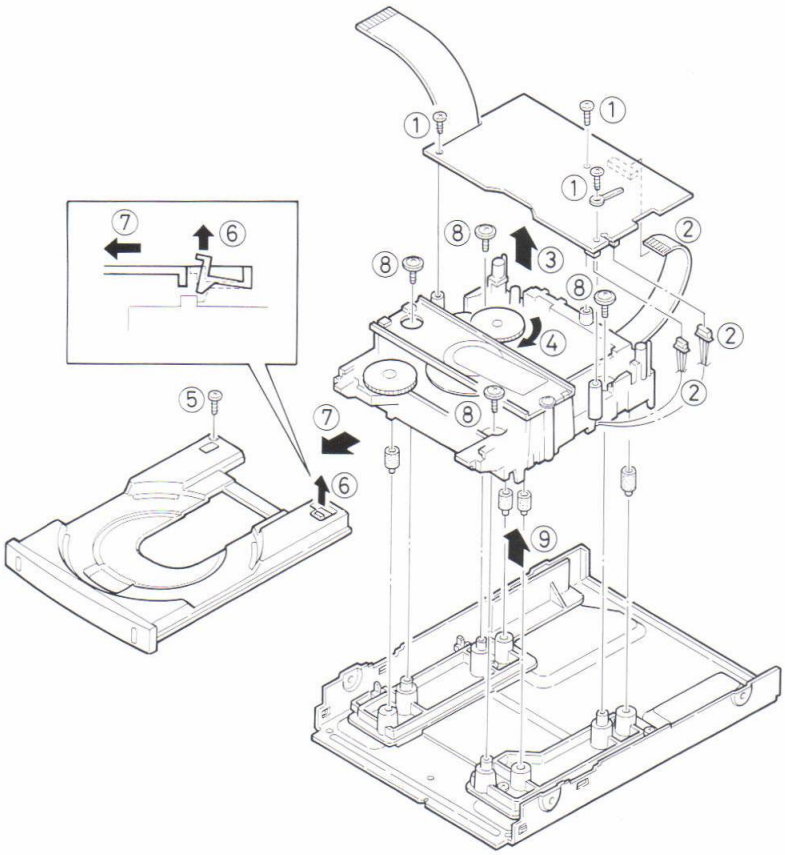

4. P. C. BOARD LAYOUT

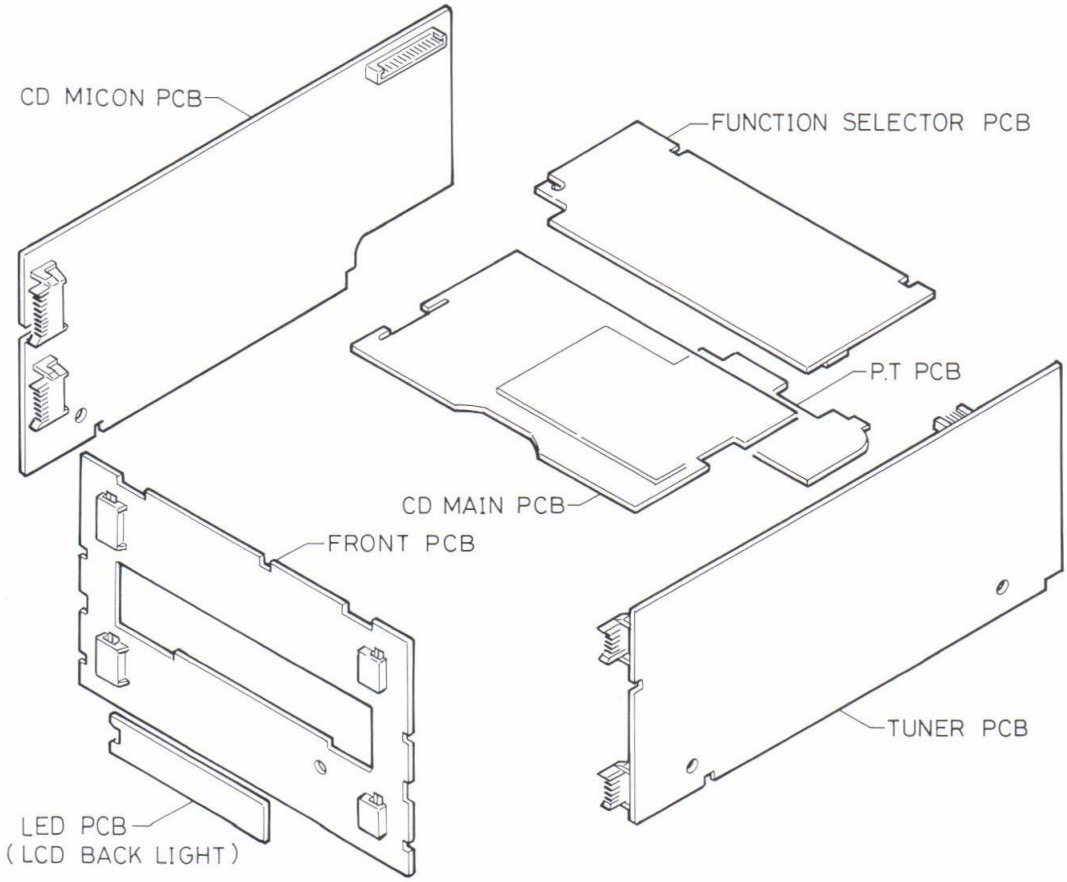

ADJUSTMENT (TUNER)

- Use a plastic screwdriver for adjustment.
- Adjust the intermediate frequency of AM and FM to the frequency of ceramic filter.

1. FM BAND

SG RF Level : 75 ohm Open voltage dBμV

Antenna : 75 ohm Direct, Modulation : 1kHz, Dev. : ±75kHz (mono) · ±67.5kHz (main) · ±6.75kHz(pilot)

STEP	ITEMS	TUNING FREQUENCY	INPUT CONDITION		OUTPUT CONDITION		PARTS	STANDARDS
			MEASURE	INPUT	MEASURE	OUTPUT		
1	IF(0V)	98.0MHz (66dB)	FM SG	TP211(H) TP212(E)	Digital Voltmeter	TP203(H) #TP204(E)	T2202	0±0.05V
2	VCO	98.0MHz (66dB)	FM SG	TP211(H) TP212(E)	Frequency Counter	TP206(H) TP207(E)	SVR23	##19KHz±50Hz
3	SEPARA-TION	98.0MHz (66dB)	FM SG + Stereo Modulator	TP211(H) TP212(E)	VTVM Oscilloscope	TP233(L) TP234(R) TP235(E)	------	Output : Maximum Confirm to the spec. sensitivity.
4	STEREO INDICATOR	98.0MHz	FM SG + Stereo Modulator	------	------	------	------	Confirm to the spec. sensitivity.

: TP204 is no earth point. ## : Adjust in the modulation off

2. AM BAND

Antenna : IRE Loop, Modulation : 400Hz 30% SG RF Level : 75 ohm Open voltage dBμV

STEP	ITEMS	TUNING FREQUENCY	INPUT CONDITION		OUTPUT CONDITION		PARTS	STANDARDS
			MEASURE	INPUT	MEASURE	OUTPUT		
1	COVER	522kHz 1611kHz	------	------	Digital Voltmeter	TP202(H) TP207(E)	------	Confirm 1.1 ~ 1.5V Confirm ≦8.5V (about 6.5V)
2	TRACKING	603kHz 1404kHz	AM SG	LOOP ANT	VTVM Oscilloscope	TP233(L) TP234(R) TP235(E)	------ ------	Output : Maximum Confirm to near the effective sensitivity.
3	AUTO STOP	999kHz	------	------	------	------	------ ------	Confirm to the spec. sensitivity.

3. PARTS LOCATION

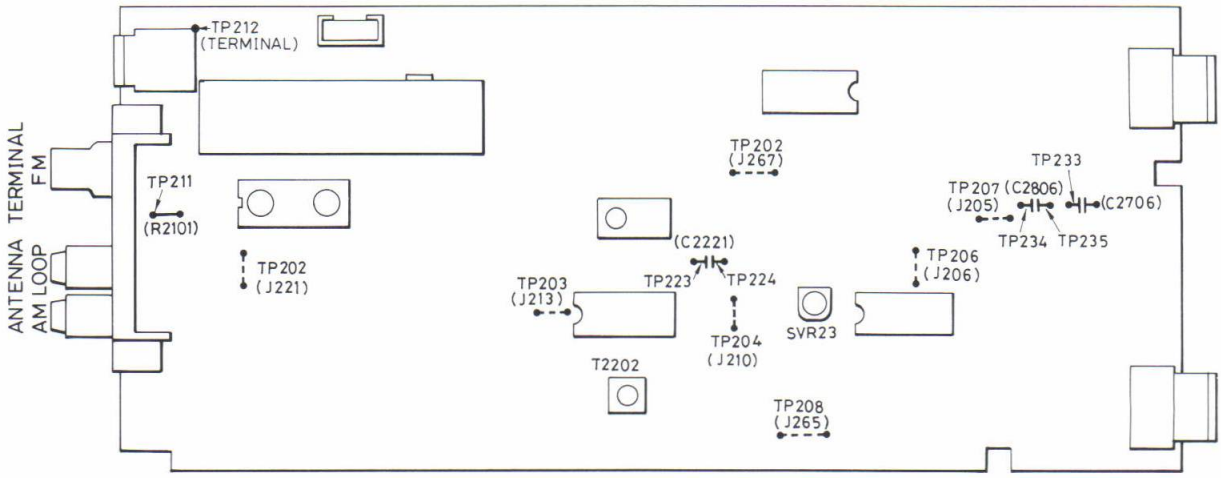

LASER BEAM SAFETY PRECAUTIONS (CD)

Do not look straight at the laser beam from the pickup and do not point the beam at your fingers or any other part of your body.
Note: The laser beam must never be allowed to enter the eyes since this may damage the eyes.
Power must never be supplied to a pickup with a damaged laser output part (objective lens, etc.).

Structural Safety Interlock
This model has a disc chuck lever and top lid. This disc chuck lever and top lid prevent to expose the laser beam for users.

INVISIBLE LASER RADIATION EXPOSURE TO BEAM IS DANGEROUS CLASS 1 LASER PRODUCT
OUTPUT POWER : 0.6 mW MAX WAVELENGTH : 790 nm

CLASS 1 LASER PRODUCT
LUOKAN 1 LASERLAITE
KLASS 1 LASERAPPARAT

BEFORE REPAIRING THE COMPACT DISC PLAYER PARTS

Many semiconductors (ICs and transistors) and a pickup (with a built-in laser diode) for reading the music signals on compact discs by means of a laser beam are used as the parts in the compact disc player unit.

1) Precautions for handling the pickup and semiconductors (particularly the ICs)

① The pickup and semiconductors (particularly the ICs) may be damaged if they come into contact with a source of high voltage static electricity. Do not bring them, therefore, into contact with or into the vicinity of anything which has been charged with high voltage static.

② The pickup consists of a large number of optical and precision parts. Do not store or repair it, therefore, in any location with a high temperature, high humidity, high magnetic fields or high dust concentration. (Since the pickup contains a powerful magnet, it must not be brought near any magnetized objects.)

③ Do not apply strong external pressure to the pickup or subject it to impact. Actions like these can cause the printed circuit board to crack or malfunctioning to occur.

④ Do not use a pickup which has been subjected to strong external pressure or to an impact. The performance of such a pickup may deteriorate gradually and cause malfunctioning.

⑤ The pickup is a single integrated part which has been very precisely adjusted. Therefore, its adjustment points and set screws must not be touched.

2) How to prevent static during handling

① When replacing any of the parts, disconnect the power plug from the unit being repaired.

② All measuring instruments, tools and repair equipment must be grounded. Cover the work bench where the repair work will be done with a grounded electrically conductive sheet.

③ Ground the metal part of the soldering iron in order to safeguard against leakage of electricity from the heater.

④ Repair personnel must wear grounding bands around their wrists to discharge static picked up by their bodies. These bands are grounded through a resistor (with a 1M ohms resistance).

Note: Under no circumstances must be the grounding bands be grounded without a resistor (with a 1M ohms resistance) since doing so involves the risk of electric shocks.
Since static in the clothes of the repair personnel will not be discharged by wearing grounding bands, every care must be taken not to allow the clothes to touch the pickup and semiconductors (particularly the ICs).

⑤ The pickup, which is a single integrated part, is kept in a conductive bag. Use this bag to convey the pickup from one place to another. In order to avoid damage resulting from static which may occur when the pickup is removed from the bag, make sure that it is not placed on top of the bag.

3) Precautions with laser beam

① Do not look straight at the laser beam from the pickup and do not point the beam at your fingers or any other part of your body.
Note: The laser beam must never be allowed to enter the eyes since this may damage the eyes.

② Power must never be supplied to a pickup with a damaged laser output part (objective lens, etc.).

4) Cleaning the lens surface

① Blow off dust on the lens using the kind of air brush which is used for cameras.

② Remove stubborn dirt with a cotton swab dipped in isopropyl alcohol. Do not use any other type of cleaning fluid since it may mark the plastic lens.
Notes:
① Do not use too much isopropyl alcohol: the excess may seep inside the pickup.
② The lens is held in place by a very feeble support spring. Therefore, when cleaning the lens, avoid applying any more force by the cotton swab than is necessary since this may bend the support spring out of shape.

CD MECHANISM REMOVAL

1). Preparations

① Do not apply unnecessary force to the pickup when handling it. Care should be taken not even to touch the lens or drive circuit sections.

② Do not apply unnecessary force (do not pull or push it forcefully) to remove the disc tray from its inside position. Unnecessary force may break the teeth on the tray gear (CM6).

③ In the descriptions which follow, the numbers in the parentheses after the parts are reference numbers in the exploded views. Refer to these views.

2). Removing and installing the disc tray

① Remove the stop screw (CTY1) of the disc tray (CT21). (①)

② Pull the disc tray (CT21) all the way forward by turning the tray drive gear (CM12) clockwise. (②)

Note: Do not take hold of the disc tray (CT21) and pull it out by force.

③ Push the catch on the disc tray (CT21) in the direction shown by the arrow, and draw out the disc tray (CT21). (③)

④ To install the disc tray, turn the gear (CM12) in the direction of the arrow as far as it will go. (②)

⑤ Align the disc tray (CT21) with the mechanism chassis (CM39). Adjusting second tooth of the tray move gear (CM3). (④)

⑥ Push the disc tray (CT21) toward the rear, and interlock it with the tray drive gear (CM12) as shown in Fig. ④.

⑦ Secure it with the screw (CTY1) which was removed in step ①.

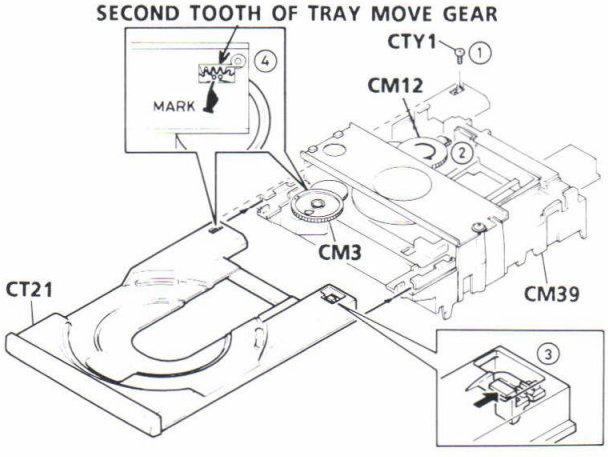

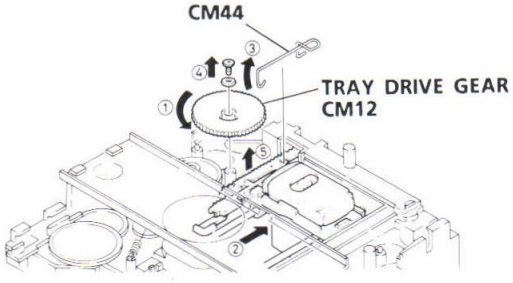

3). Disassembling the mechanism

(1) Removing the pickup block

① Remove the disc tray (CT21). (Refer to steps ①, ② and ③ of the section entitled "Removing and installing the disc tray.")

② Turn the tray drive gear (CM12) counterclockwise (①) , and move the pickup in the direction of arrow (②) as far as it will go.

③ Remove the spring wire (CM44) with tweezers. (③)

④ Remove the screw (CM11), and also remove the tray drive gear (CT12) and washer (CM13). (④)

⑤ Now remove the pick rack gears (CM16 and CM19).

Note: It will not be possible to remove the pick rack gears (CM16 and CM19) unless the pickup has been moved all the way in the direction of arrow (②).

⑥ The pickup block can now be removed by taking out the screw (CM51) and spring coil (CM49).

Note: If the timing gear (CM23) is in the state shown by "X" in the figure on the right, put it in the state shown by "O."

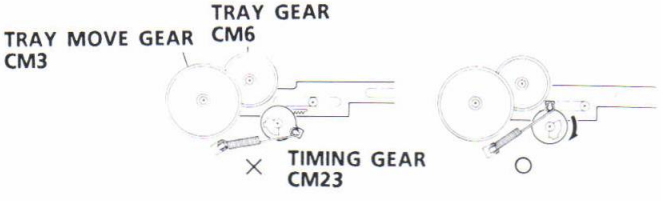

(2) Replacing the turntable and spindle motor

- First, have the new turntable (CM45) and special washer (CM47) ready.

  Note: The turntable (CM45) and special washer (CM47) which have been removed cannot be reused because the heat from the soldering iron has deformed them.

- Have calipers with a dial ready.

① Apply heat for about a minute to the shaft of the spindle motor (CM48) underneath the turntable (CM45) using the soldering iron (at 60W). This will melt the bonding agent which bonds the spindle motor (CM48) shaft and turntable (CM45) together.

② Take off the turntable (CM45) from the spindle motor (CM48) shaft by gradually applying force in the upward direction at the center of the bottom surface of the turntable (CM45).

③ The spindle motor (CM48) can now be removed from the sub chassis (CM50) by removing the two screws (CM46) which secure the spindle motor (CM48).

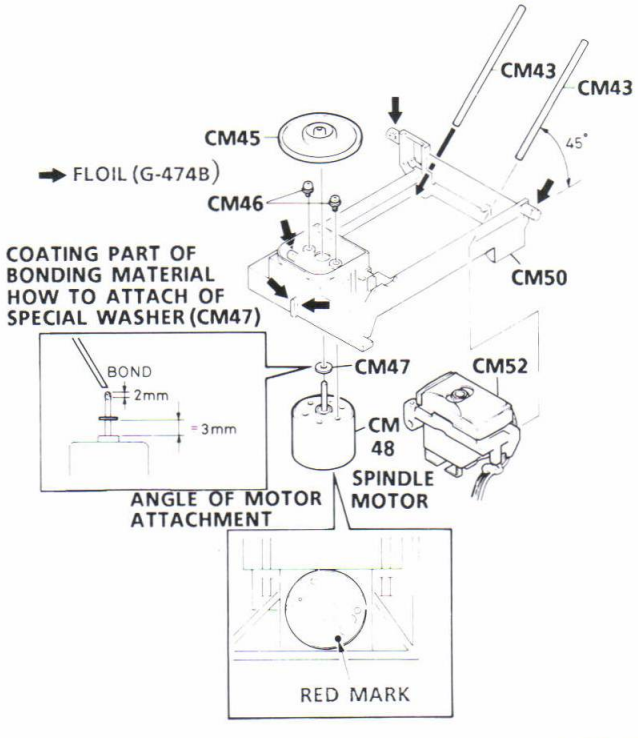

④ When replacing the spindle motor (CM48), mount the new spindle motor onto the chassis (CM50) using the two screws (CM46) at the angle shown in the figure.

⑤ Insert the new special washer (CM47) into the shaft of the spindle motor (CM48) as shown in the figure.

⑥ Wipe the shaft (across an area extending from the end to 10 mm or more from the end) of the spindle motor (CM48) with a cloth dipped in alcohol (normal hexane).

⑦ Apply bonding agent to the sides of the spindle motor (CM48) shaft. Apply an amount equivalent to about half a grain of rice to the area of the shaft which is about 2 mm below its end. For the bonding agent, mix equal amounts of "Three Bond 2001" and "Three Bond 2105F."

⑧ Insert the new turntable (CM45) over the spindle motor (CM48) shaft, as shown in the figure, to mount.

⑨ Press down gently on the turntable (CM45) which has been mounted, align it with the mounting dimensions and fix it in place.

⑩ Check that the bonding agent does not ooze out (particularly at the top center area of the turntable (CM45)). If any agent is oozing out, wipe it away with a cloth dipped in alcohol (normal hexane).

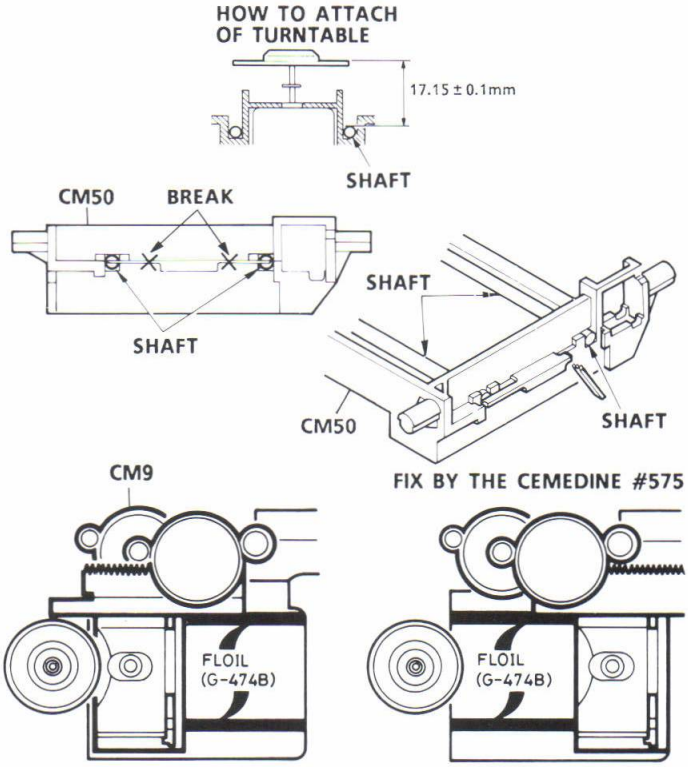

(3) Replacing and lubricating the pickup

① Pull out the two pickup rails (CM43) from the chassis (CM50).

② The pickup (CM52) can now be removed once the two pickup rails (CM43) have been taken out.

③ When the pickup has been replaced, be sure to wipe the two pickup rails (CM43) cleanly and apply grease (FLOIL G-474B) around the entire circumference of the rails and along their entire length.

④ Pass the two pickup rails (CM43) through the new pickup (CM52), insert them into the chassis (CM50), and fix them in place at an angle of 45- as shown in the figure.

Notes:

① When applying the grease, do not allow any grease to adhere to any other parts.

② If a part (indicated by the dots in the figure) of the chassis (CM50) is damaged in the process of removing or inserting the two pickup rails (CM43) from or into the chassis (CM50), wipe the damaged area with a cloth dipped in alcohol (normal hexane), and bond it together using a bonding agent (Cemedine #575).

(4) Replacing the loading/sled motor

① The loading/sled motor (CM38) can be removed from the chassis (CM39) once the screw (CM24) securing the motor (CM38) is removed.

② Mount the new loading/sled motor (CM38) onto the chassis (CM39) using the screw (CM24).

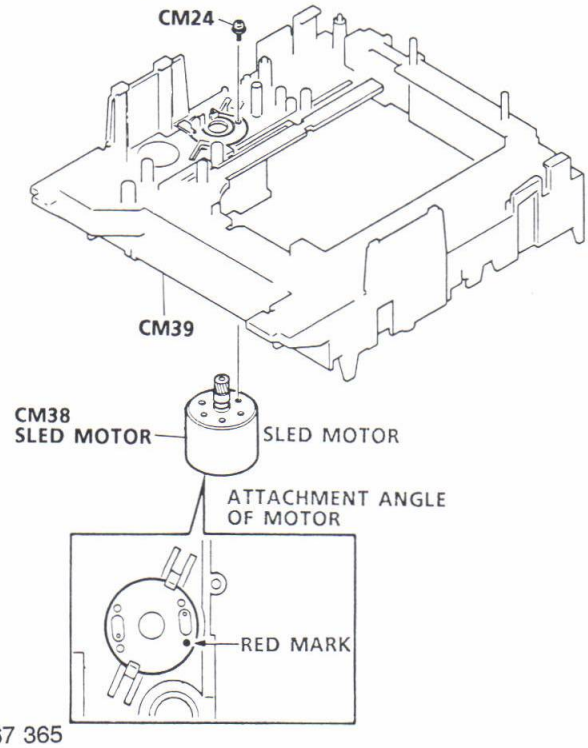

(5) Checking the loading/sled motor's operation

① As shown in the figure, connect an ammeter and a DC power supply to the loading/sled motor (CM38), and set the tray open and end switches to the "off" positions.

② Check that the pickup (CM52) moves smoothly without stopping from the inner circumference of the compact disc toward its outer circumference when a DC 0.6V voltage is applied from the DC power supply.

③ The disc tray is housed inside and the gear (CM9) slips when a DC 4V voltage is applied from the DC power supply. Check that the ammeter indicates 120mA or more at this time.

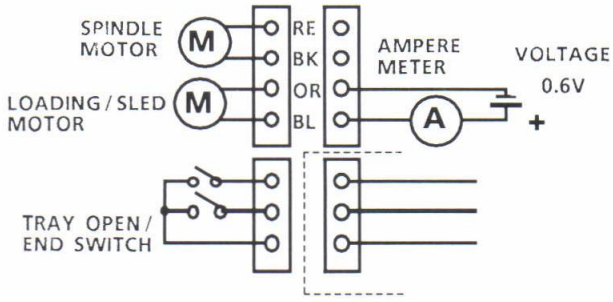

4). Checkpoints for CD mechanism assembly and lubrication

(1) Lubricating and mounting the tray slide

① Apply grease (FLOIL G-474B) to the area indicated by the diagonal in the figure.

② When inserting the tray slide (CM15), set the position where it is installed vis-a-vis the base/tray timing gear (CM20) as shown in the figure.

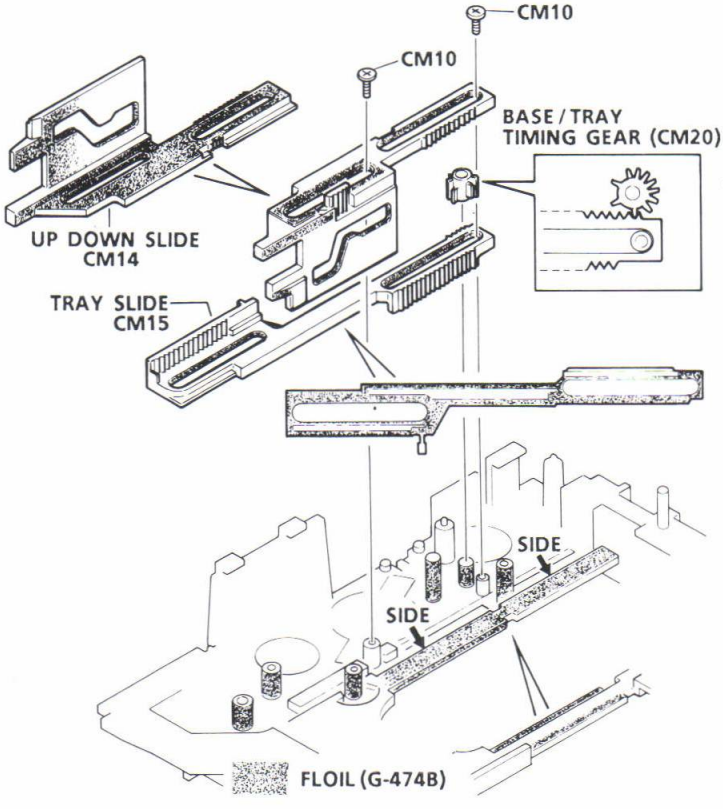

(2) Installing the tray gear

① Move the tray slide (CM15) in the direction of the arrow (1).

② Engage the gear section of the tray slide (CM15) with the inner gear of the tray gear (CM6) at the center line, as shown in the figure.

③ Align the tray move gear (CM3) with the position (○) of the hole in the outer gear of the tray gear (CM6), and engage the tray move gear (CM3) , as shown in the figure.

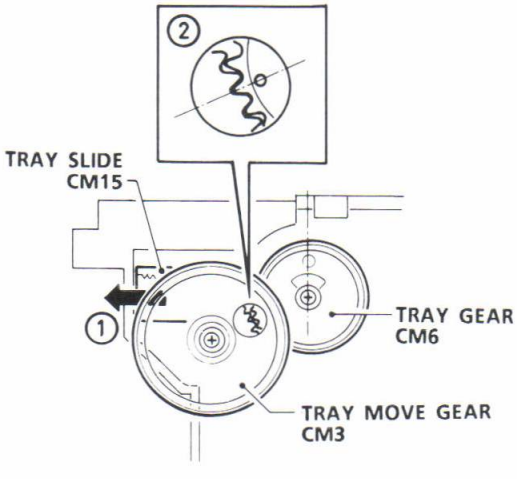

(3) Installing the base up/down slide and timing gear

① Move the base up/down slide (CM14) in the direction of the arrow (1), and set the gears at the positions shown in the figure.

② Insert the timing gear (CM23), and mount it using the screw (CM21).

③ Turn the timing gear (CM23) counterclockwise.

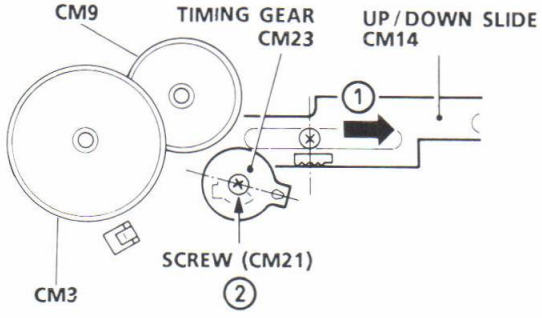

④ Hook the gear tension spring (CM22) onto the timing gear (CM23).

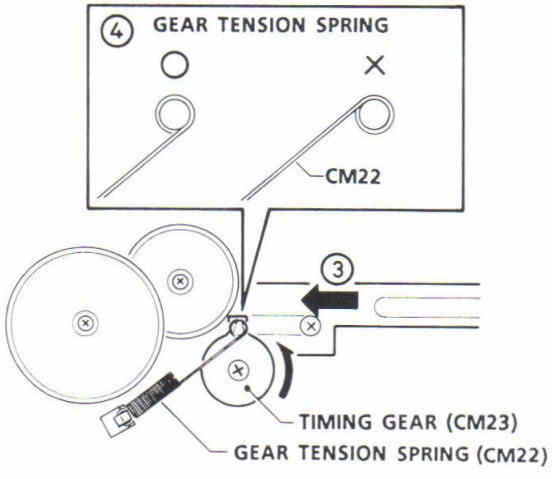

(4) Lubricating the base lever

① Apply grease (FLOIL G-474B) to the area indicated by the diagonal in the figure.

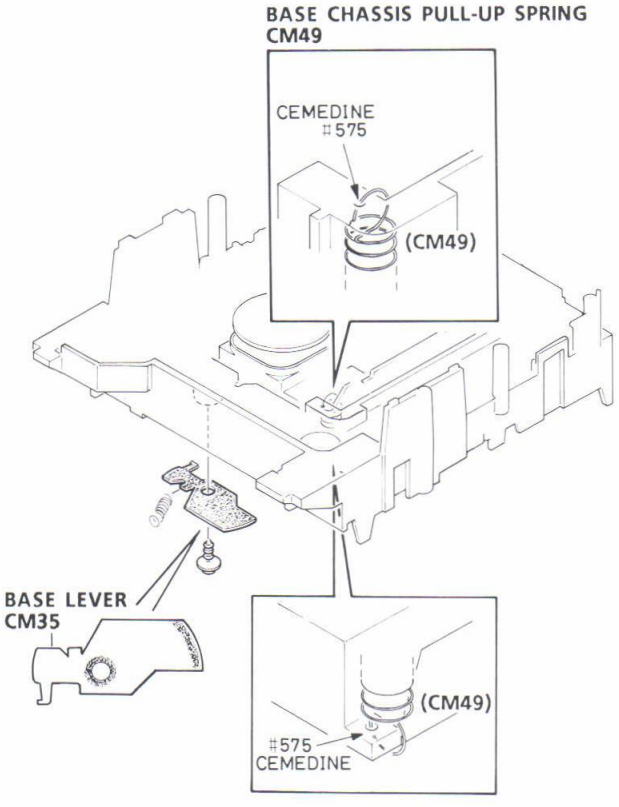

(5) Lubricating the pickup sled gear and clutch gear

① Apply grease (FLOIL G-474B) around the entire circumference of the lower gear of the pickup sled gear (CM12), as shown in the figure (area indicated by the diagonal).

② Apply grease (G-333) around the entire circumference of the outer clutch gear (CM9).

③ Apply grease (FLOIL G-474B) to the area indicated by the diagonal part of the outer clutch gear (CM9) where it makes contact with the inner clutch gear (CM8).

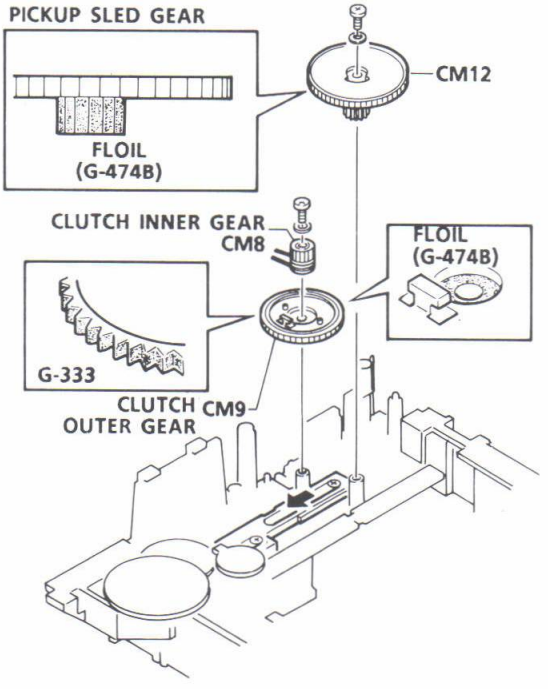

(6) Arranging and securing the leads

① As shown in the figure, set the pickup (CM52) at a position on the innermost circumference of the compact disc, and pass the leads from the pickup (CM52) and spindle motor (CM48) through pin (a) of the chassis (CM39). Arrange the leads from the loading/sled motor (CM38) and sensor switch (micro switch) (CM26) by passing them through point (b) in the chassis (CM39). After securing the leads with the lug (CM41), check that the pickup (CM52) moves smoothly without the leads interfering with its movement.

② If no problems arise in the <1> check, secure the points shown in the figure using a bonding agent (Cemedine #575).

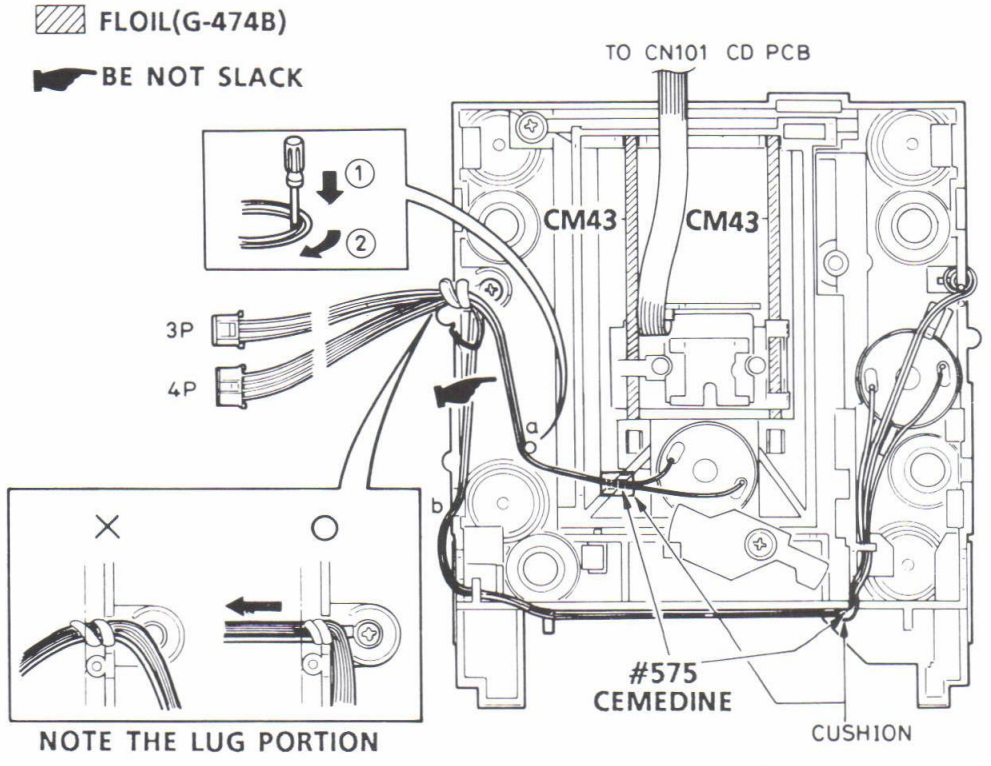

Specifications

To enter any service mode other than timer debugging, first simultaneously press the OPEN/CLOSE and BAND keys on the CT unit. This accesses the service mode entry state. Now press one of the buttons on the CT unit to enter a service mode. As the service mode entry state is discontinued after 1 second elapses, the system will enter a service mode only if the next key is pressed within one second.

1. Confirm the clock

- When the CLOCK key is pressed during the service mode entry state, a rectangular wave with a frequency of one- fourth that of the oscillating frequency (1.048576MHz) is output from the micro processor's port CLKOUT.
- The clock output is stopped by pressing either the POWER or SET CLEAR key.

2. Timer debugging

- When the FAST key is pressed, the current time advances one minute and the seconds readout changes to 55 seconds. If the key is held down the time advances continuously.
- The FAST key, a concealed key not actually mounted to the set.

  Note : For timer debugging, the service mode entry state (entered by simultaneously pressing the OPEN/CLOSE service mode entry key and the BAND key) is not necessary.

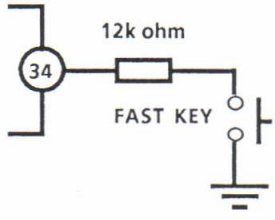

3. Checking the key input signal connections

- Enter this mode by pressing the MEMORY(TUNER) key during the service mode entry state.
- The entire LCD goes out once this mode is entered.
- In this mode, as keys on the CT unit (or remote control unit) are pressed segments on the LCD corresponding to each key on a one-to-one basis come on (i.e. the lit portions gradually increase). (Refer to Table 1.)

KEY	DISPLAY	KEY	DISPLAY	KEY	DISPLAY
TIME / FADE	TIME	CLOCK	REC	FUNCTION	DIGIT 3 : 8
REPEAT	REPEAT	SLEEP	SLEEP	BAND	DIGIT 4 : 8
STOP	ONE	TUNING UP	SIDE A	PST UP	1 OF CALENDAR
CD MEMORY	PROG.	TUNING DOWN	SIDE B	PST DOWN	2 OF CALENDAR
PLAY / PAUSE	▷	WAKE UP	WAKE UP	FM/TUNE MODE	3 OF CALENDAR
RANDOM	RANDOM	TIMER	TIMER	WIDE	4 OF CALENDAR
OPEN / CLOSE	ALL	SET / CLEAR	@	FWD	DISC
EDIT	EDIT	MEMORY	5 OF CALENDAR	BACK	TRACK
COMPUTER REC	COMP. REC	POWER	DIGIT 2 : 8		

@ : Releases the key checking mode and returns the set to the normal mode.

TABLE 1 : CORRESPONDING KEYS AND DISPLAYS IN THE KEY CHECKING MODE

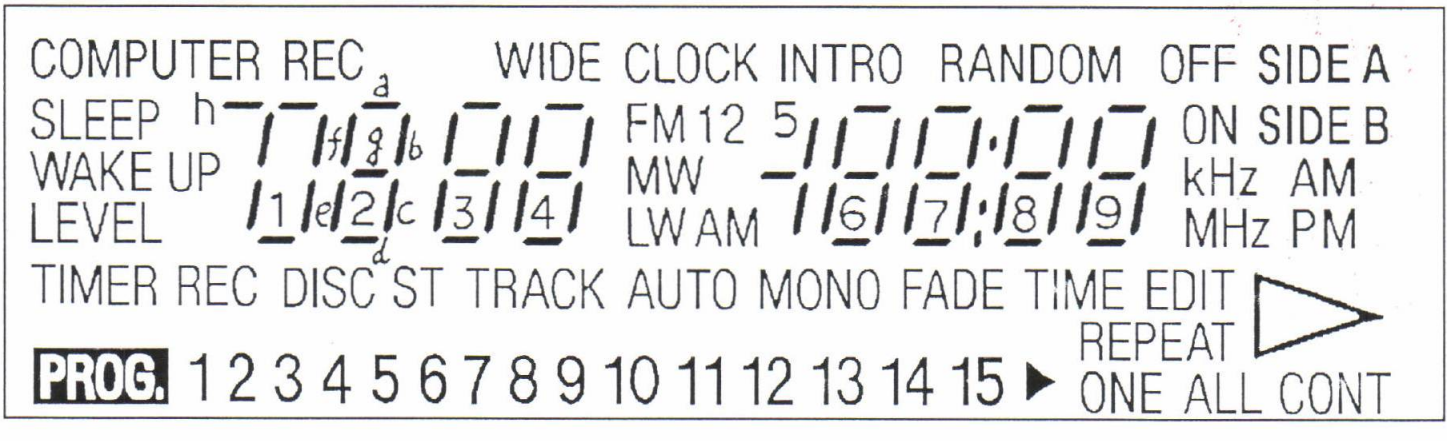

FIGURE 1 : LCD (LIQUID CRYSTAL DISPLAY)

4. Checking LCD connections

- Enter this mode by pressing the OPEN/CLOSE key during the service mode entry state. (See note.)
- The entire LCD goes out once this mode is entered.
- In this mode, one segment of the LCD lights each time the OPEN/CLOSE key is pressed.
- Press the SET/CLEAR key to exit this mode and return to the normal mode.

5. System connector checking mode

- Enter this mode by pressing the BAND key during the service mode entry state.
- Before entering this mode, connect a jig at the beginning of the system connector cord as shown in Figure 2.
- In this mode, check the signal connections shown in Table 2 for the set's CT unit and system connector cord.
- The results of the checking of connections appear on the LCD as shown in Table 2.
- Press the SET/CLEAR key to release the system connector checking mode and return to the normal mode.

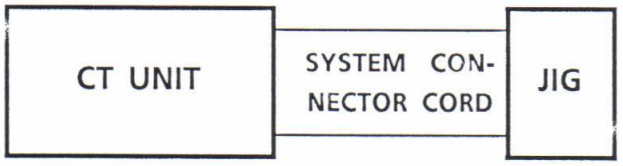

FIGURE 2 : CONNECTION DURING THE SYSTEM CONNECTOR CHECKING MODE

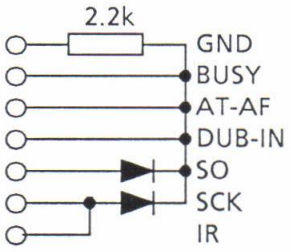

FIGURE 3 : CIRCUIT DIAGRAM OF THE CONNECTOR CHECKING JIG

STATE	DISPLAY
SO is N.G.	0
SCK is N.G.	1
DUB-IN is N.G.	2
AT-AF is N.G.	3

STATE	DISPLAY
BUSY is N.G.	4
IR is N.G.	5
All OK	-

TABLE 2 : DISPLAYS DURING SYSTEM CONNECTOR CHECKING

6. CD tracking balance adjusting mode

- Enter this mode by pressing the PLAY/PAUSE key during the service mode entry state.
- If the power is off when this mode is entered, the power automatically comes on.
- In this mode, the tracking balance adjustment state (tracking is off) is automatically entered after the tray is completely closed. If the PLAY key is pressed in this state, the tracking servo is turned on and playing is begun at the present position. Therefore, the readout on the display at the time playing is begun indicates the initial position of the pickup (i.e. the position of the limit switch).
- In this mode, the tracking balance adjustment state can be entered by pressing the MEMORY key during playing. Pressing the PLAY key in this state turns on the tracking servo and causes playing to begin.
- Turning off the power releases the CD tracking balance adjusting mode.

7. CD operation display mode

- Enter this mode by pressing the STOP key during the service mode entry state.
- If the power is off when this mode is entered, the power automatically comes on.

- In this mode, when CD function are used, displays like those shown in Table 3 (which represent CD operations different than normally displayed) appear in the LCD track number display.
- In this mode, the calendar numbers shown in Table 4 come on when an error occurs in CD operations, at which time the track number and calendar displays become fixed at their current readouts. To release these fixed displays, press the STOP key while operations are stopped.
- This mode is released when the power is turned off.

DISPLAY	OPERATION
00	Focus search has been begun
01	Focus search has been begun
02	Waiting for focusing
03	Focusing
04	Spindle kick is in progress
05	Both CLV and tracking are ON
06	Both CLV and tracking are ON
0-	Focus search has been completed (success, failure)
20	Tray closing has begun
21	Tray closing is in progress
22	Pick return (internal direction) is in progress
23	Pick return (external direction) is in progress
2-	Tray closing (pick return) has been completed
30	Spindle braking has begun
31	Spindle braking is in progress
32	Pick return is in progress
3-	Spindle braking and pick return have been completed
40	Fast forwarding is in progress
41	Rewinding is in progress
50	Playing has begun
51	Playing is in progress
52	Playing is in progress (skip return operation)
60	TOC reading has been begun
61	TOC reading is in progress

DISPLAY	OPERATION
62	TOC reading is in progress
6-	TOC reading has been completed (success/failure)
70	L-point access has been begun
71	L-point access (REV64 track jump)
72	L-point access (FWD64 track jump)
73	L-point access (REV16 track jump)
74	L-point access (FWD16 track jump)
75	L-point access (REV1 track jump)
76	L-point access has been completed
80	Pausing has begun
83	Pause (REV16 track jump)
84	Pause (FWD16 track jump)
85	Pause (REV1 track jump)
86	Pause (trace)
90	Music access has begun
91	Music access (high-speed access has begun)
92	Music access (high-speed access is in progress)
93	Music access (high-speed access has been completed)
94	Music access (high-speed access has been completed)
95	Music access (high-speed access has been completed)
96	Music access (REV64 track jump)
97	Music access (FWD64 track jump)
98	Music access (REV16 track jump)
99	Music access (FWD16 track jump)
9-	Music access (final stage)

TABLE 3 : DISPLAYS DURING THE CD OPERATION MODE

NUMBER	STATE OF CD ERROR
1	Focusing is not possible in focus search.
2	The subcode is not input during disc startup.
3	TOC cannot be read.
4	The focus was lost while the servo was on (during playing, etc.).
5	The subcode is not input while the servo is on (during playing, etc.).
6	The tray does not open completely.
7	The tray does not close completely.

TABLE 4 : DISPLAY OF CD ERRORS

CD ADJUSTMENT

Electrical Adjustment

So far we have presented explanations regarding compact disc player handling, notes prior to repair, handling the pick-up and disassembly of the unit. Be sure to carefully read these instructions before making any adjustments.

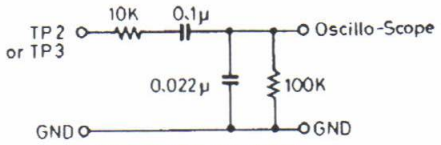

BAND PASS FILTER

Preparations for Adjustments

Measuring instruments, tools and filter

(1) Test disc. : 4822 397 60161 (SONY - YEDS 18)
(2) Oscilloscope : SS5711 (10MHz or dual phenomenon)
or Memoryscope : DSS6521 (Storagescope)
(3) Digital voltmeter (Input impedance 1M ohm or more)
(4) Oscillator (400Hz, 300mV RMS)
(5) Frequency Counter (5MHz ; or more)
(6) Screw drivers (non-metalic) for adjustments
(7) Band Pass Filter
(8) AC Voltage Meter

Notes : a. The adjustments can be using the equipment produced by other manufactures provided that the performance of that equipment corresponds to that of the above listed models.
b. Use a 10 : 1 probe for observing signals on the oscilloscope and storage scope.
c. Test disc is subject change without notice.

1. Initial set

Set the SVR10 at its initial position of adjustment controls as shown in figure below.

SVR10
INITIAL SET
(MECHANICAL
SENTER)

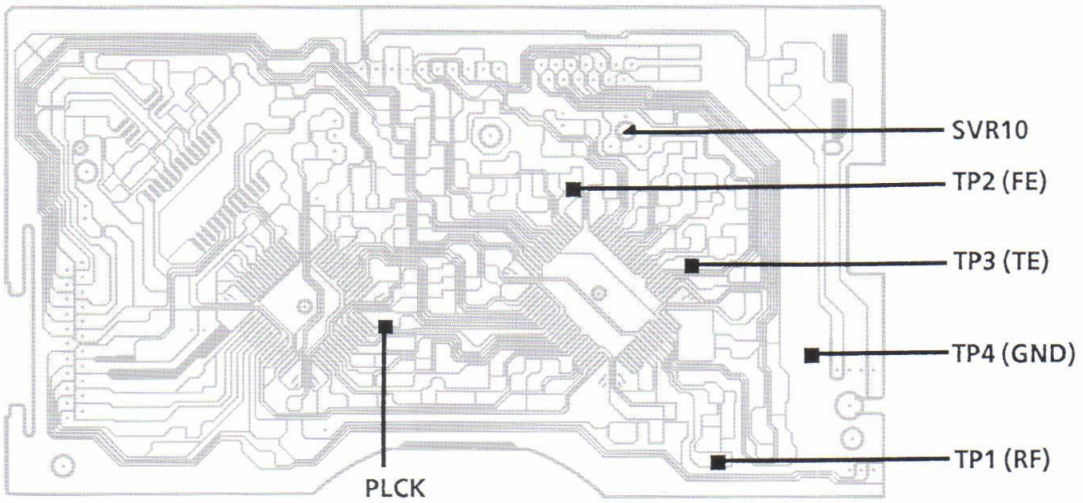

2. Tracking Balance Adjustment (SVR10)

1. Connect the oscilloscope to TP3 (TE) and TP4 (GND.).
2. Turn on the power of the unit. Insert test disc.
3. Play-back the test disc.
4. Continuously press the forward search ▸▸ or backward-search ▸▸ button to do it
5. Adjust SVR10 so that the TE (Tracking Error) signal waveform of TP3 on the oscilloscope is vertically symmetrical relative to 0V. (See figure right side)

*If the adjustment is imperfect, become run away the sled motor (pick-up sending motor), inferior playability.

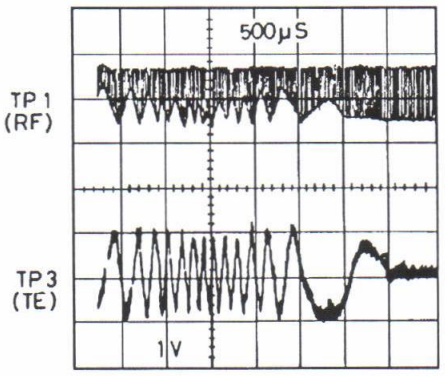

◂◂ SEARCH

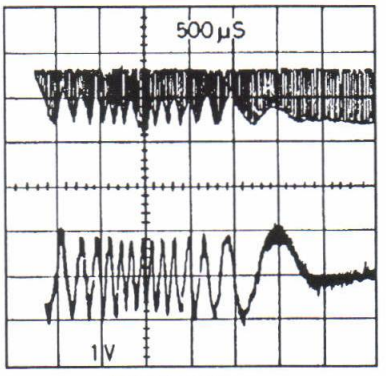

SEARCH ▸▸

2. Other Adjustment of Tracking Balance (SVR10)

1. Set the service mode(CD tracking balance adjusting mode).
   · Enter this mode by pressing the PLAY/PAUSE key during the service mode entry state. Pressing the PLAY / Pause key in this state turns on the tracking servo and causes playing to begin. (See service mode)
2. Connect the oscilloscope to TP3 (TE) and TP4 (GND).
3. Adjust SVR10 so that the TE (Traverse) signal waveform of TP3 on the oscilloscope is vertically symmetrical relative to 0V. Or may adjust SVR11 so that the DC voltage : (Peak Hold Level) - (Bottom Hold Level) of the traverse signal is 0V. (See figure right side)
4. If it were not for obtain waveform at the right figure, repeat item 2-1 ~2-3.

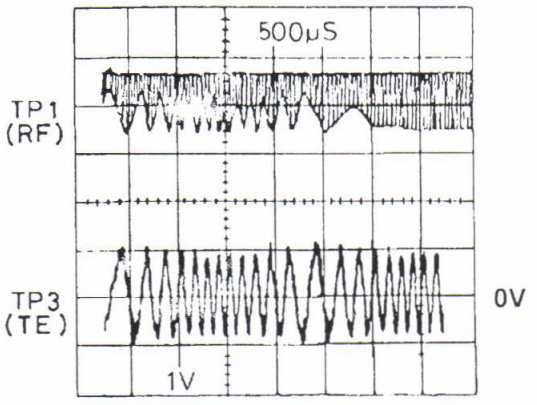

3. Focus Gain Confirmation

1. Connect the storage scope to TP2 (F.E : Focus Error) through the Band pass filter. (See BPF Figure)
2. Turn on the power of the unit.
3. Play-back the test disc.
4. Set the output of AF oscillator to 400Hz, 0.5V rms and connect to pin 24 (IC101) through the resistor : 120k ohms.
5. Confirm so that the voltage of the F.E signal waveform on the storage scope is 0.5V p-p, ±3db by through BPF.

* If this CONFIRMATION is imperfect, become weak the mechanical shock, inferior playability, and can not playback the Disc.

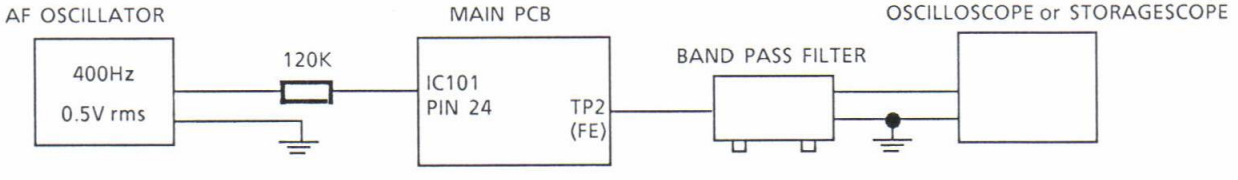

4. Tracking Gain Confirmation

1. Connect the storage scope to TP3 (T.E) through the Band pass filter. (See BPF Figure).
2. Turn on the power of the unit.
3. playback the test disc.
4. Set the output of AF oscillator to 400Hz, 0.5V rms and connect to pin 14 (IC101) through resistor 47k ohms.
5. Confirm so that the voltage of T.E signal waveform on the storage scope is 0.5V p-p, ±3db by through BPF.

* If this CONFIRMATION is imperfect, become weak the mechanical shock, inferior playability, and can not playback the Disc.

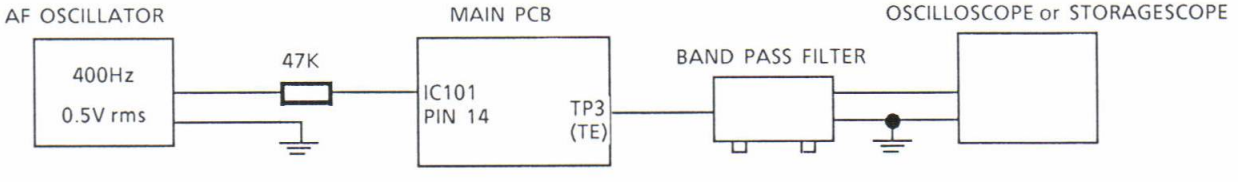

EXPLODED VIEW (TUNER / CD UNIT)

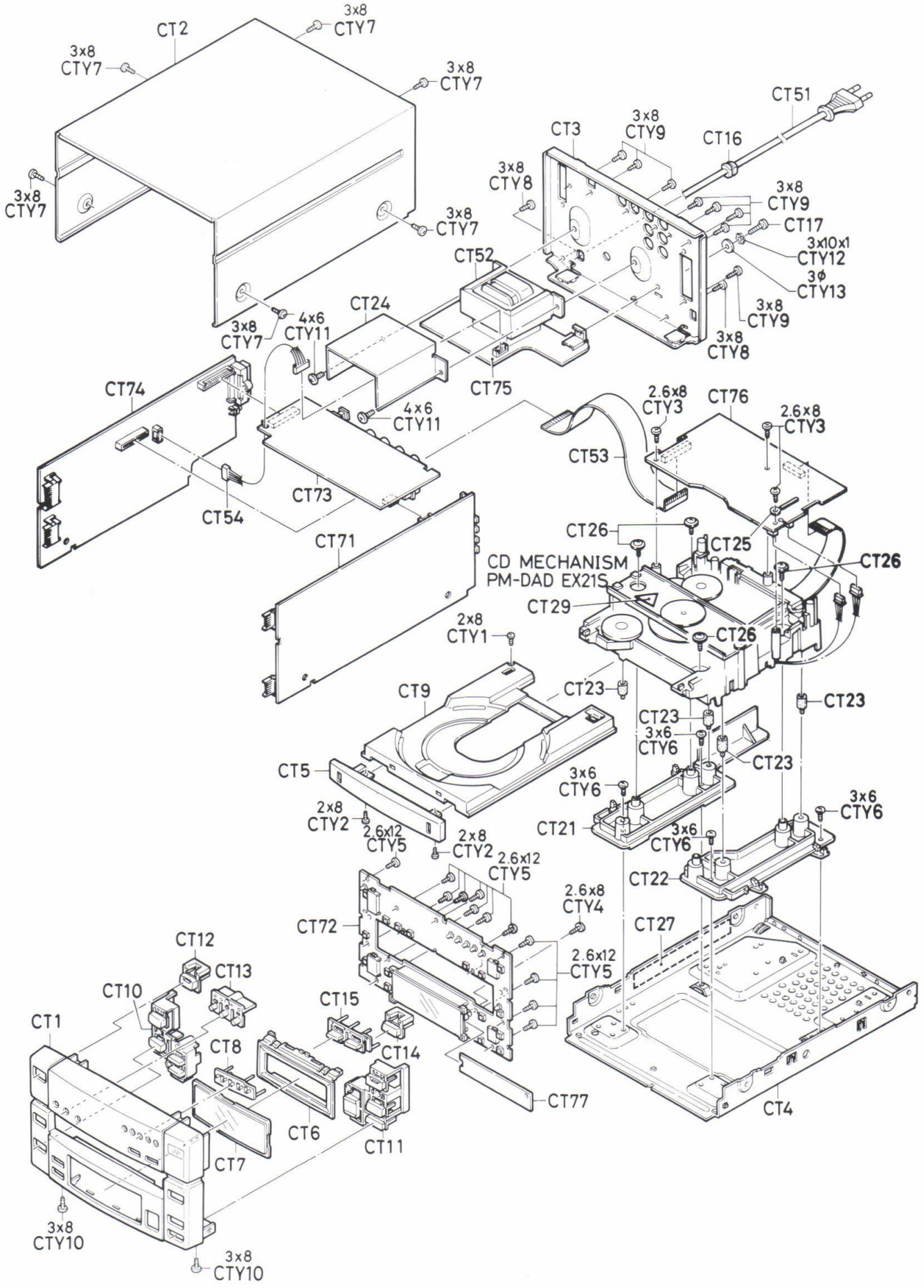

PARTS LIST (CD / TUNER UNIT)

PRODUCT SAFETY NOTICE

Each precaution in this manual should be followed during servicing. Components identified with the IEC symbol ⚠ in the parts list and the schematic diagram designate components in which safety can be of special significance. When replacing a component identified ⚠, use only the replacement parts designated, or parts with the same ratings of resistance, wattage or voltage that are designated in the parts list in this manual. Leakage-current or resistance measurements must be made to determine that exposed parts are acceptably insulated from the supply circuit before returning the product to the customer.

CAUTION: Regular type resistors and capacitors are not listed. To know those values, refer to the schematic diagram.

CABINET

Ref. No.	Part No.	Description
CT1	4822 426 51577	ASSY,PANEL,FRONT
CT2	4822 425 40188	CABINET,TOP
CT3		ASSY,PANEL,REAR
CT4		CABINET,BOTTOM
CT5	4822 454 30474	ESCUTCHEON,CD TRAY
CT6	4822 454 30467	ESCUTCHEON,LCD WINDOW
CT7	4822 450 61953	WINDOW,LCD
CT8	4822 450 61964	WINDOW,FUNCTION LED
CT9	4822 464 70599	TABLE,LOADING,CD TRAY
CT10	4822 410 62182	BUTTON,BAND+C REC+TIME+EDIT
CT11	4822 410 62187	ASSY,BUTTON,OPEN/CLOSE ETC.
CT12	4822 410 62188	ASSY,BUTTON,POWER(STAND BY)
CT13	4822 410 62183	BUTTON,CLOCK+TIMER+WAKE UP
CT14	4822 410 62184	BUTTON,FUNCTION
CT15	4822 410 62185	BUTTON,CLEAR+MEMO
CT16	⚠4822 532 12189	FIXER,AC CORD
CT17	4822 502 13805	SPECIAL SCREW,PHONO GND.

CHASSIS

Ref. No.	Part No.	Description
CT21		MOUNT-M,CD MECHA(L)
CT22		MOUNT-M,CD MECHA(R)
CT23	4822 466 93016	RUBBER CUSHION,MECHA FLOAT
CT24		SHIELD,POWER TRANS
CT26	4822 502 13786	SPECIAL SCREW,MECHA FIX
CT25		LUG,LEAD FIX
CT27		LABEL,SAFETY,LASER LABEL
CT28		LABEL,LASER PICK-UP

FIXING PARTS

Ref. No.	Part No.	Description
CTY1		SCR S-TPG PAN 2X8, CD TRAY STOPPER
CTY2		SCR S-TPG BIN 2X8,CD TRAY
CTY3		SCR S-TPG BIN 2.6X8, CD MECHA PCB FIX
CTY4		SCR S-TPG BIN 2.6X8, LED PCB FIX
CTY5		SCR S-TPG BIN 2.6X12, FRONT PCB FIX
CTY6		SCR S-TPG BIN 3X6, CD MECHA MOUNT-M FIX
CTY7		SCR S-TPG BIN 3X8,CABINET
CTY8		SCR S-TPG BIN 3X8, BOTTOM+REAR
CTY9		SCR S-TPG BIN 3X8, REAR(EL.PARTS)
CTY10		SCR S-TPG BIN 3X8, BOTTOM+FRONT
CTY11		SCR S-TPG BIN 4X6, POWER TRANS FIX
CTY12	4822 532 12079	WASHER Z 3X10X1,PHONO GND.
CTY13	4822 532 11388	WASHER OUT TW 3,PHONO GND.

ELECTRICAL PARTS

Ref. No.	Part No.	Description
CT51	⚠	POWER CORD,AC IN
or	⚠	POWER CORD,AC IN
or	⚠	POWER CORD,AC IN
or	⚠	POWER CORD,AC IN
CT52	⚠4822 146 21689	POWER TRANS,CT T1001
CT53	4822 321 61746	CORD,22P,FLEXIBLE FILM
CT54		ASSY,CONNECTOR-S,5P, AC-MICON PCB (CN108)

TUNER P.C.BOARD ASSY

Ref. No.	Part No.	Description
CT71		ASSY,PCB,TUNER
	4822 242 80306	FILTER,PAIR(CF204+CF205), 459KHZ,AM
C2304	4822 121 42872	POLYPRO 1000P J 100V
C2458	4822 124 21903	NP-ELECT 1U Q 50V
CF201	4822 242 81287	FILTER,CERAMIC,10.7MHZ,FM
CF202	4822 242 81287	FILTER,CERAMIC,10.7MHZ,FM
CF204	4822 242 81038	FILTER,459KHZ,AM
CF205	4822 242 80307	I.F FILTER,459KHZ,AM
CN201	4822 290 61034	TERMINAL,ANT, FM(DIN)+PUSH 2P
CN202		PLUG,4P,TO FUNCTION PCB
CN203		SOCKET,6P,BOARD TO BOARD, TO FRONT PCB
CN204		SOCKET,6P,BOARD TO BOARD, TO FRONT PCB
CN205		TERMINAL,PCB FIX
D2201	4822 130 82633	DIODE GMA01
or	4822 130 33305	DIODE 1SS133
or	4822 130 33305	DIODE 1SS176
D2301	4822 130 82633	DIODE GMA01
or	4822 130 33305	DIODE 1SS133
or	4822 130 33305	DIODE 1SS176
D2302	4822 130 82633	DIODE GMA01
or	4822 130 33305	DIODE 1SS133
or	4822 130 33305	DIODE 1SS176
IC201	4822 209 70439	IC LA1265-AUD
IC202	4822 209 63129	IC LA3361
IC203	4822 209 30152	IC LM7001
L2150	4822 153 70053	TUNER,AM RF(FRONT END)
L2451	4822 157 63357	FILTER,RIPPLE,100UH
Q2104	4822 130 60945	TR 2SC3330-U
Q2105	4822 130 61931	TR 2SC2999-E-SPA
Q2201	4822 130 43298	TR 2SC2839-E
Q2202	4822 130 60945	TR 2SC3330-U
Q2203	4822 130 42715	TR 2SA608-F-SPA
or	4822 130 42715	TR 2SA933S-R
or	4822 130 42715	TR 2SA933S-S
Q2301	4822 130 42594	TR DTC144ES
Q2302	4822 130 62769	TR DTA114YS
Q2351	4822 130 62769	TR DTA114YS
Q2451	4822 130 41925	TR 2SC1571-F-NP
Q2452	4822 130 41925	TR 2SC1571-F-NP
Q2701	4822 130 60945	TR 2SC3330-U
Q2702	4822 130 60948	TR 2SD1012-G-SPA
Q2801	4822 130 60945	TR 2SC3330-U
Q2802	4822 130 60948	TR 2SD1012-G-SPA
Q2901	4822 130 60945	TR 2SC3330-U
Q2902	4822 130 42715	TR 2SA608-F-SPA
or	4822 130 42715	TR 2SA933S-R
or	4822 130 42715	TR 2SA933S-S

PARTS LIST (CD / TUNER UNIT)

Ref. No.	Part No.	Description
Q2903	4822 130 42594	TR DTC144ES
R2465		CARBON 33 JB 1/4W,FLAME PROOF
SVR23	4822 100 11759	SEMI-FIXED VR,10K OHM(B)
T2202	4822 148 81179	I.F.T,107MHZ,FM
T2203	4822 157 63361	MX COIL
T2701	4822 157 63356	CHOKE,TRAP
T2801	4822 157 63356	CHOKE,TRAP
TU201	4822 210 10434	TUNER,FM-RF(FRONT END)
X2451	4822 242 81289	CRYSTAL,7.2MHZ

FRONT P.C.BOARD ASSY

Ref. No.	Part No.	Description
CT72		ASSY,PCB,FRONT
LCD21	4822 130 91168	LCD(LIQUID CRYSTAL DISPLAY)
		REFLECTOR, SHEET,LCD
CN251		PLUG,6P,BOARD TO BOARD,TO TUNER PCB
CN252		PLUG,6P,BOARD TO BOARD,TO TUNER PCB
CN253		PLUG,8P,BOARD TO BOARD,TO CD MICON PCB
CN254		PLUG,10P,BOARD TO BOARD,TO CD MICON PCB
D2501	4822 130 83137	LED SLR-40VC70F095,STAND-BY
or	4822 130 83137	LED SLR-40VC70F095-P,STAND-BY
D2502	4822 130 83137	LED SLR-40VC70F095,OPEN/CLOSE
or	4822 130 83137	LED SLR-40VC70F095-P,OPEN/CLOSE
D2503	4822 130 83137	LED SLR-40VC70F095,TAPE
or	4822 130 83137	LED SLR-40VC70F095-P,TAPE
D2504	4822 130 83137	LED SLR-40VC70F095,TUNER
or	4822 130 83137	LED SLR-40VC70F095-P,TUNER
D2505	4822 130 83137	LED SLR-40VC70F095,CD
or	4822 130 83137	LED SLR-40VC70F095-P,CD
D2506	4822 130 83138	LED SLR-40MC70F095-P,AV
or	4822 130 83138	LED SLR-40MC70F095-Q,AV
D2507	4822 130 83138	LED SLR-40MC70F095-P,PHONO
or	4822 130 83138	LED SLR-40MC70F095-Q,PHONO
D2511	4822 130 82633	DIODE GMA01
or	4822 130 33305	DIODE 1SS133
D2512	4822 130 82633	DIODE GMA01
or	4822 130 33305	DIODE 1SS133
IC251	4822 209 31686	IC UPD75306GF-225-3B9
IC252	4822 209 31642	IC MC74HC138AN
S2501	4822 276 13303	SWITCH,TACT,POWER
S2502	4822 276 13303	SWITCH,TACT,FUNCTION
S2503	4822 276 13303	SWITCH,TACT,OPEN
S2504	4822 276 13303	SWITCH,TACT,PLAY/PAUSE
S2505	4822 276 13303	SWITCH,TACT,STOP
S2506	4822 276 13303	SWITCH,TACT,COMPUTER REC
S2507	4822 276 13303	SWITCH,TACT,EDIT
S2508	4822 276 13303	SWITCH,TACT,TIME/FADE
S2509	4822 276 13303	SWITCH,TACT,CLOCK
S2510	4822 276 13303	SWITCH,TACT,WAKE UP
S2511	4822 276 13303	SWITCH,TACT,TIMER
S2512	4822 276 13303	SWITCH,TACT,BAND
S2513	4822 276 13303	SWITCH,TACT,SET/CLEAR
S2514	4822 276 13303	SWITCH,TACT,MEMORY
S2515	4822 276 13303	SWITCH,TACT,UP(FWD)
S2516	4822 276 13303	SWITCH,TACT,DOWN(BACK)
X2501	4822 242 81288	RESONATOR,CERAMIC,4.19MHZ

FUNCTION SELECTOR P.C.BOARD ASSY

Ref. No.	Part No.	Description
CT73		ASSY,PCB,FUNCTION

Ref. No.	Part No.	Description
CN261	4822 265 31004	JACK,3P(RCA TYPE),AUDIO R
CN262	4822 265 31005	JACK,3P(RCA TYPE),AUDIO L
CN263	4822 267 31529	SOCKET,2P(RCA TYPE),VIDEO MONITOR
CN265		SOCKET,4P,BOARD TO BOARD,TO TUNER PCB
CN266		SOCKET,15P,BOARD TO BOARD,TO MICON PCB
CN267	4822 265 20597	OPTO CONNECTOR,DIGITAL OUT
D2601	4822 130 82633	DIODE GMA01
or	4822 130 33305	DIODE 1SS133
D2602	4822 130 82633	DIODE GMA01
or	4822 130 33305	DIODE 1SS133
D2604	4822 130 82633	DIODE GMA01
or	4822 130 33305	DIODE 1SS133
D2605	4822 130 82633	DIODE GMA01
or	4822 130 33305	DIODE 1SS133
IC261	4822 209 62253	IC MC14051BCP
IC262	4822 209 62253	IC MC14051BCP
IC263	4822 209 73559	IC MC14052BCP
IC264	4822 209 73303	IC RC4558S-D
or	4822 209 73303	IC NJM4558SD
IC265	4822 209 73303	IC RC4558S-D
or	4822 209 73303	IC NJM4558SD
Q2601	4822 130 60945	TR 2SC3330-U
Q2602	4822 130 60945	TR 2SC3330-U
Q2604	4822 130 60945	TR 2SC3330-U
Q2605	4822 130 62769	TR DTA114YS
Q2606	4822 130 42594	TR DTC144ES
Q2607	4822 130 42594	TR DTC144ES
Q2608	4822 130 42715	TR 2SA933S-R
or	4822 130 42715	TR 2SA933S-S
Q2609	4822 130 42594	TR DTC144ES
Q2610	4822 130 42594	TR DTC144ES

CD MICON P.C.BOARD ASSY

Ref. No.	Part No.	Description
CT74		ASSY,PCB,CD MICON
		LUG,LEAD RETAINER
C1301	4822 124 11313	DL-ELECT 0.047F Z 5.5V
C1608		ELECT 2200U M 16V
C1609		ELECT 1000U M 16V
C1654		ELECT 2200U M 25V
CN101	4822 265 41252	PLUG,15P,TO DECK/AMPLIFIER UNIT
CN102	4822 290 61038	SOCKET,15P,BOARD TO BOARD,TO FUNCTION
CN103		SOCKET,10P,BOARD TO BOARD,TO FRONT PCB
CN104		SOCKET,8P,BOARD TO BOARD,TO FRONT PCB
CN105		PLUG,5P,TO P,T PCB
CN106	4822 265 51341	SOCKET,22P,TO CD MAIN PCB
D1301	4822 130 82634	DIODE DS442X
D1302	4822 130 83136	ZENER DIODE GZS3.9Z
D1303	4822 130 82633	DIODE GMA01
or	4822 130 33305	DIODE 1SS133
D1304	4822 130 82633	DIODE GMA01
or	4822 130 33305	DIODE 1SS133
D1305	4822 130 33948	ZENER DIODE MTZ5.6B
D1306	4822 130 82633	DIODE GMA01
or	4822 130 33305	DIODE 1SS133
D1307	4822 130 82423	ZENER DIODE MTZ6.8A
D1601	4822 130 32508	DIODE DSF10C
or	4822 130 32816	DIODE 1SR35-200A
D1602	4822 130 32508	DIODE DSF10C
or	4822 130 32816	DIODE 1SR35-200A
D1603	4822 130 32508	DIODE DSF10C
or	4822 130 32816	DIODE 1SR35-200A
D1604	4822 130 32508	DIODE DSF10C
or	4822 130 32816	DIODE 1SR35-200A
D1651	4822 130 32508	DIODE DSF10C

PARTS LIST (CD / TUNER UNIT)

Ref. No.	Part No.	Description
or	4822 130 32816	DIODE 1SR35-200A
D1652	4822 130 32508	DIODE DSF10C
or	4822 130 32816	DIODE 1SR35-200A
D1653	4822 130 32508	DIODE DSF10C
or	4822 130 32816	DIODE 1SR35-200A
D1654	4822 130 32508	DIODE DSF10C
or	4822 130 32816	DIODE 1SR35-200A
IC131	4822 209 31687	IC UPD75116GF-F56-3BE
IC132	4822 209 71922	IC LA6510
IC133	⚠4822 209 30153	IC L78M12ML
or	⚠4822 209 31712	IC UPC78M12HF
or	⚠4822 209 31712	IC NJM78M12FA
L1301	4822 157 63357	FILTER,RIPPLE,100UH
L1302	4822 157 63357	FILTER,RIPPLE,100UH
Q1301	4822 130 42715	TR 2SA608-F-SPA
or	4822 130 42715	TR 2SA933S-R
or	4822 130 42715	TR 2SA933S-S
Q1302	4822 130 60945	TR 2SC3330-U
Q1303	4822 130 63211	TR DTA114TS
Q1304	4822 130 61189	TR DTC114TS
Q1305	4822 130 42715	TR 2SA608-F-SPA
or	4822 130 42715	TR 2SA933S-R
or	4822 130 42715	TR 2SA933S-S
Q1306	4822 130 42715	TR 2SA608-F-SPA
or	4822 130 42715	TR 2SA933S-R
or	4822 130 42715	TR 2SA933S-S
Q1500	4822 130 60948	TR 2SD1012-G-SPA
or	4822 130 62768	TR 2SD1468S-S
Q1501	4822 130 60948	TR 2SD1012-G-SPA
or	4822 130 62768	TR 2SD1468S-S
Q1601	4822 130 60945	TR 2SC3330-U
Q1604	4822 130 42715	TR 2SA608-F-SPA
or	4822 130 42715	TR 2SA933S-R
or	4822 130 42715	TR 2SA933S-S
Q1605	4822 130 42683	TR 2SC3400
or	4822 130 42683	TR DTC124ES
S1301	4822 276 13304	SWITCH,TACT,MEMORY RESET
X1301	4822 242 81291	RESONATOR,XTAL,4.19MHZ

P.T P.C.BOARD ASSY

Ref. No.	Part No.	Description
CT75		ASSY,PCB,P.T
		TERMINAL,PHONO GND
CN107		PLUG,5P,TO CD MICIN PCB
ICP10	⚠4822 252 20266	IC PROTECTOR ICP-N25
ICP11	⚠4822 252 20266	IC PROTECTOR ICP-N25
ICP12	⚠4822 252 20266	IC PROTECTOR ICP-N25
L1001	⚠4822 158 60629	INDUCTOR,FERITE,1.2A,
		WITH COVER
R1801	⚠	RESISTOR 0.33 J- 1/2W
R1802	⚠	RESISTOR 0.33 J- 1/2W
R1803	⚠	RESISTOR 0.33 J- 1/2W
TH101	⚠	TERMINAL,AC IN
TH102	⚠	TERMINAL,AC IN

LED (LCD BACK LIGHT) P.C.BOARD ASSY

Ref. No.	Part No.	Description
CT77		ASSY,PCB,LED
CN401		ASSY,CONNECTOR-S,2P,
		TO FRONT PCB
D4001	4822 130 83139	LED CL-170YG-CD-C
or	4822 130 83139	LED CL-170YG-CD-D
or	4822 130 83139	LED CL-170YG-CD-E
D4002	4822 130 83139	LED CL-170YG-CD-C
or	4822 130 83139	LED CL-170YG-CD-D
or	4822 130 83139	LED CL-170YG-CD-E
D4003	4822 130 83139	LED CL-170YG-CD-C
or	4822 130 83139	LED CL-170YG-CD-D
or	4822 130 83139	LED CL-170YG-CD-E

Ref. No.	Part No.	Description
D4004	4822 130 83139	LED CL-170YG-CD-C
or	4822 130 83139	LED CL-170YG-CD-D
or	4822 130 83139	LED CL-170YG-CD-E
D4005	4822 130 83139	LED CL-170YG-CD-C
or	4822 130 83139	LED CL-170YG-CD-D
or	4822 130 83139	LED CL-170YG-CD-E
D4006	4822 130 83139	LED CL-170YG-CD-C
or	4822 130 83139	LED CL-170YG-CD-D
or	4822 130 83139	LED CL-170YG-CD-E
D4007	4822 130 83139	LED CL-170YG-CD-C
or	4822 130 83139	LED CL-170YG-CD-D
or	4822 130 83139	LED CL-170YG-CD-E
D4008	4822 130 83139	LED CL-170YG-CD-C
or	4822 130 83139	LED CL-170YG-CD-D
or	4822 130 83139	LED CL-170YG-CD-E
D4009	4822 130 83139	LED CL-170YG-CD-C
or	4822 130 83139	LED CL-170YG-CD-D
or	4822 130 83139	LED CL-170YG-CD-E
D4010	4822 130 83139	LED CL-170YG-CD-C
or	4822 130 83139	LED CL-170YG-CD-D
or	4822 130 83139	LED CL-170YG-CD-E
D4011	4822 130 83139	LED CL-170YG-CD-C
or	4822 130 83139	LED CL-170YG-CD-D
or	4822 130 83139	LED CL-170YG-CD-E
D4012	4822 130 83139	LED CL-170YG-CD-C
or	4822 130 83139	LED CL-170YG-CD-D
or	4822 130 83139	LED CL-170YG-CD-E
D4013	4822 130 83139	LED CL-170YG-CD-C
or	4822 130 83139	LED CL-170YG-CD-D
or	4822 130 83139	LED CL-170YG-CD-E
D4014	4822 130 83139	LED CL-170YG-CD-C
or	4822 130 83139	LED CL-170YG-CD-D
or	4822 130 83139	LED CL-170YG-CD-E
D4015	4822 130 83139	LED CL-170YG-CD-C
or	4822 130 83139	LED CL-170YG-CD-D
or	4822 130 83139	LED CL-170YG-CD-E
D4016	4822 130 83139	LED CL-170YG-CD-C
or	4822 130 83139	LED CL-170YG-CD-D
or	4822 130 83139	LED CL-170YG-CD-E
D4017	4822 130 83139	LED CL-170YG-CD-C
or	4822 130 83139	LED CL-170YG-CD-D
or	4822 130 83139	LED CL-170YG-CD-E
D4018	4822 130 83139	LED CL-170YG-CD-C
or	4822 130 83139	LED CL-170YG-CD-D
or	4822 130 83139	LED CL-170YG-CD-E
D4019	4822 130 83139	LED CL-170YG-CD-C
or	4822 130 83139	LED CL-170YG-CD-D
or	4822 130 83139	LED CL-170YG-CD-E
D4020	4822 130 83139	LED CL-170YG-CD-C
or	4822 130 83139	LED CL-170YG-CD-D
or	4822 130 83139	LED CL-170YG-CD-E

CD MAIN P.C.BOARD ASSY

Ref. No.	Part No.	Description
CT76		ASSY,PCB,CD
CN101	4822 267 51167	SOCKET,13P,TO PICKUP
CN102		PLUG,4P,TO MECHANISM MOTORS
CN103		PLUG,3P,TO MECHANISM SWITCH
CN104	4822 267 60334	SOCKET,13P,TO CD MICON PCB
IC101	4822 209 31678	IC LA9210M
IC102	4822 209 31679	IC LA6524
IC104	4822 209 31778	IC LC7866E
IC105	4822 209 31682	IC SM5870DS
IC106	4822 209 30159	IC XRA15218F
or	4822 209 30159	IC BA15218F
Q101	4822 130 62938	TR 2SA1037K-R
Q102	4822 130 61537	TR 2SC2412K-R
Q103	4822 130 61537	TR 2SC2412K-R
SVR10	4822 100 11759	SEMI-FIXED V.R,10K OHM(B)
X101	4822 242 81292	RESONATOR,XTAL,16.93MHZ

EXPLODED VIEW (CD MECHANISM)

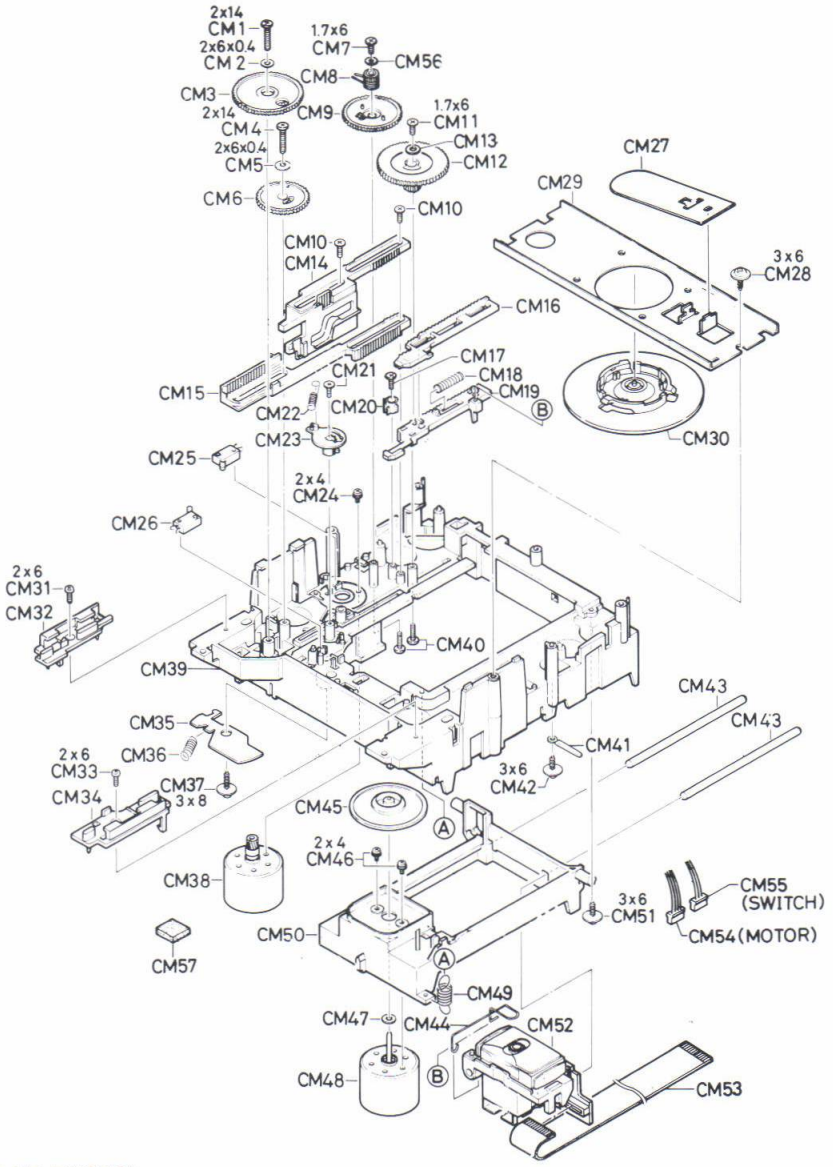

CD MECHANISM (PM-DAD EX21S)

Ref. No.	Part No.	Description
CM2	4822 532 12082	WASHER V 2X6X0.4,GEAR FIX
CM3	4822 522 33094	GEAR,TRAY MOVE
CM5	4822 532 12082	WASHER V 2X6X0.4,GEAR FIX
CM6	4822 522 33095	GEAR,TRAY
CM8	4822 522 33294	ASSY,GEAR,CLUTCH
CM9	4822 522 33292	GEAR,CLUTCH OUTER
CM10	4822 502 13787	SPECIAL SCREW,SLIDE 14
CM12	4822 522 33097	GEAR,PICK SLED
CM13	4822 532 52479	SPECIAL WASHER,PICK GEAR 12
CM14	4822 402 61386	SLIDE,BASE UP/DOWN
CM15	4822 402 61391	SLIDE,TRAY
CM16	4822 522 33098	GEAR,PICK RACK UPPER
CM17	4822 502 13787	SPECIAL SCREW,GEAR 20 FIX
CM18	4822 492 42554	SPRING,COMP,RACK BACK
CM19	4822 522 33099	GEAR,PICK RACK LOWER
CM20	4822 522 33101	GEAR,BASE/TRAY TIMING
CM21	4822 502 13787	SPECIAL SCREW,GEAR 23
CM22	4822 492 33348	SPRING,TENSION,GEAR 23
CM23	4822 522 33293	GEAR,TIMING
CM24	4822 502 13788	SCR PAN+SW 2X4,SLED MOTOR
CM25	4822 276 13124	SWITCH,LIMIT
CM26	4822 276 13124	SWITCH,TRAY OPEN
CM27	4822 492 71176	SPRING PLATE,CHUCKING
CM28	4822 502 13789	SCR S-TPG BRZ+FLG 3X6
CM30	4822 528 50327	ASSY,PULLEY
CM32	4822 402 61383	BRACKET-M,TRAY GUIDE(L)
CM34	4822 402 61384	BRACKET-M,TRAY GUIDE(R)

Ref. No.	Part No.	Description
CM35	4822 402 61436	LEVER,BASE
CM36	4822 492 42555	SPRING,COMP,BASE LEVER MOVE
CM38	4822 361 30356	ASSY,MOTOR,LOADING/SLED
CM39	4822 464 50925	CHASSIS,LOADING
or	4822 464 50925	CHASSIS,LOADING
CM40	4822 502 13787	SPECIAL SCREW,BOSS REINFORCEMENT
CM41	4822 281 50173	LUG,WIRE DRESS
CM43	4822 535 93332	SHAFT,PICK RAIL
or	4822 535 93332	SHAFT,PICK RAIL
or	4822 535 93332	SHAFT,PICK RAIL
CM44	4822 492 71175	SPRING,WIRE,PICK BACK
CM45	4822 528 10824	TURNTABLE,CD CHUCKING
or	4822 528 10824	TURNTABLE, TURN TABLE
CM46	4822 502 13788	SCR PAN+SW 2X4,SPINDLE M
CM47	4822 532 52353	SPECIAL WASHER,ADHESIVE ESCAPE STOP
CM48	4822 361 30357	COMMUTATE MOTOR,SPINDLE
CM49	4822 492 33347	SPRING,TENS,CHASSIS PULLUP
CM50	4822 464 50926	CHASSIS,BASE
CM51	4822 502 13789	SCR S-TPG BRZ+FLG 3X6
CM52	4822 691 30289	PICKUP,LASER,SF-P1PS
or	4822 691 30289	PICKUP,LASER,SF-90PS
CM53	4822 321 61701	CORD,PICK UP
CM56	4822 532 12186	SPECIAL WASHER,GEAR 8 FIX
CM57	4822 466 62249	CUSHION,MOTOR LEAD FIX

IC BLOCK DIAGRAM (CD)

IC101 LA9210M (Servo Signal Processor)

No.	PIN NAME	I/O	FUNCTION
1	NC		Non Connection
2	VEE		-5V
3	E	I	IV Convert Input (from Photo Diode E)
4	F	I	IV Convert Input (from Photo diode F)
5	FN	I	IV Converter Input
6	FO	O	IV Converter Output
7	TEAO	O	Tracking Error Amplifier Output
8	VREF2	I	Reference Voltage 2
9	VREF3	I	Reference Voltage 3
10	TES1	I	Test Input
11	ATSC	I	+ Input of Anti Shock Detect Amplifier
12	ATSC-	I	- Input of Anti Shock Detect Amplifier
13	TPA+	I	- Input of Tracking Pulse Amplifier
14	TPA-	I	+ Input of Tracking Pulse Amplifier
15	TPAO	O	Tracking Pulse Amplifier Output
16	TOFS	I	Input for Tracking Offset
17	THDS	I	Tracking Servo Hold Switch
18	TD+	I	Add the Track Jump Pulse
19	JPO	O	Track Jump Pulse Amplifier Output
20	SLEQ	I	Input for Sled Servo Equalizer
21	TDO	O	Tracking Actuator Coil Driver Output
22	FDO	O	Focus Actuator Coil Driver Output
23	FD-	I	Input for Focus Actuator Coil Driver
24	FSW	I	Focus Servo Switch
25	NC		Non Connection
26	FEAO	O	Focus Error Amplifier Output
27	FE+	I	+ Input of Focus Error Amplifier
28	FD+	I	+ Input of Focus Actuator Coil Driver
29	SPO	O	CLV Error Amplifier Output
30	SPO-	I	Input for Spindle Motor Driver
31	SPDO	O	Spindle Motor Driver Output
32	VEE		-5V
33	SLDO	O	Sled Motor Driver Output
34	SL-	I	- Input of Sled Motor Driver
35	SL+	I	+ Input of Sled Motor Driver
36	VCC		+5V
37	SLSW	I	Sled Servo Switch
38	DEFO	O	Defect Signal Output
39	2FREQ	I	Input for VCO
40	DRF	O	Focusing Servo ON : High Level

No.	PIN NAME	I/O	FUNCTION
41	NC		Non Connection
42	JP-	I	- Input of Track Jump Pulse Amplifier
43	JP+	I	+ Input of Track Jump Pulse Amplifier
44	THLD	I	Hold of Output Voltage of Tracking Servo
45	TGL	I	Tracking Gain Low
46	TOFF	I	Input For Off the Tracking Servo
47	TES	O	Tracking Error Signal
48	HFL	O	Detect Track Signal
49	FZD	O	Detect S Carve of Focus Error Signal
50	FOCS	I	Input For Off the Focus Servo
51	CLV-	I	- Input of CLV Error Amplifier
52	CLV+	I	+ Input of CLV Error Amplifier
53	SLCO	O	Slice Level Control Amplifier Output
54	$\overline{\text{EFMO}}$	I	$\overline{\text{EFMO}}$ (RF) Signal
55	AI	I	EFMO (RF) Signal
56	VDD		+5V
57	PDO	I	+ Input of VCO Control Amplifier
58	PDO-	I	- Input of VCO Control Amplifier
59	VCOC	I	VCO Control Amplifier Output
60	VCOO	O	VCO Output
61	LF1	I	Input of Low Pass Filter
62	CLK	I	Clock
63	LASER	I	Laser Control Signal
64	66/60	I	Select of DSP LC7866/LC7860
65	NC		Non Connection
66	DF2	I	Input for Defect Pulse width Control
67	DF1	I	Input for Defect Pulse width Control
68	PH3	O	Defect Detect Timing
69	BH	I	Track Detect Timing
70	PH	I	Focus Detect Timing
71	GND		Ground
72	RF SUM	O	RF SUM Amplifier Output
73	RFS-	O	IV Converter Output
74	LDO	O	Laser Diode ON
75	LDS	I	Input of Auto Laser Power Control
76	LDC	I	Input of Auto Laser Power Control
77	VDD		+5V
78	FIN1	I	IV Convert Input (From Photo Diode A+C)
79	FIN2	I	IV Convert Input (From Photo Diode B+D)
80	VREF1	I	Reference Voltage 1

IC102 LA6524 (Dual Motor & Actuator Coil Driver)

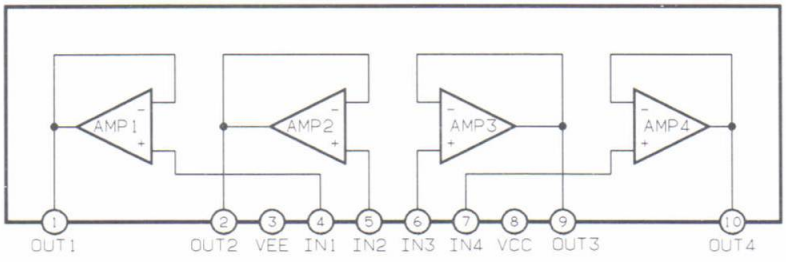

IC BLOCK DIAGRAM (CD)

IC104 LC7866E (Digital Signal Processor)

No	PIN NAME	I/O	DESCRIPTION
1	TEST1	I	For TEST. Normal time is non connection.
2	AO	O	Input from VCO output in LA9210 .(8.6436MHz)
3	AI	I	Phase comparison output of VCO and EFM signal.
4	PDO	O	
5	VSS		GND
6	$\overline{\text{EFMO}}$	O	Negative output through amplitude limiter. Antiphase of EFMO. This signal use SLICE LEVEL CONTROL.
7	EFMO	O	Positive output through amplitude limiter. Antiphase of EFMO. This signal use SLICE LEVEL CONTROL.
8	EFMIN	I	Inputting HF signal of 1~2Vp.p. This signal use SLICE LEVEL CONTROL.
9	TEST2	I	For TEST. Normal time is non connection.
10	CLV+	O	Output for DISC MOTOR CONTROL.
11	CLV-	O	Output for DISC MOTOR CONTROL.
12	V/P	O	CLV rough Servo time : Output "H" Phase control time : Output"L"
13	FOCS	O	Output "H" : Lens pull up with slowly than stop the Focus
14	FST	O	Servo. If $\overline{\text{FZD}}$ generate, it reset output of FOCS. For lead-in of
15	$\overline{\text{FZD}}$	I	Focus
16	HFL	I	Comply with command of track jump, it oscillate kick Pulse, JP+ & JP-. It jump the prescribed number of track (1,4,16,64).
17	TES	I	Comply with command of track jump, it oscillate kick Pulse, JP+ & JP-. It jump the prescribed number of track (1,4,16,64).
18	PCK	O	PCK Monitor (4.3218MHz)
19	FSEQ	O	SYNC (FS of truth) detected from EFM signal = SYNC of counter : "H" (Latch Output during in 1 frame)
20	TOFF	O	Comply with command of track jump, it oscillate kick Pulse,
21	TGL	O	JP+ & JP-. It jump the prescribed number of track (1,4,16,64).
22	THLD	O	
23	TEST3	I	For TEST. Normal time is non connection.
24	VDD		+5V
25	JP+	O	Comply with command of track jump, it oscillate kick Pulse,
26	JP-	O	JP+ & JP-. It jump the prescribed number of track (1,4,16,64).
27	DEMO	I	For adjustment of production process. Sound on function.
28	TEST4	I	For TEST. Normal time is non connection.
29	EMPH	O	Output is "H" time, it need de-emphasis
30	TESTA	I	For TEST. Normal time is "H".

No	PIN NAME	I/O	DESCRIPTION
31	SMP2	O	Output of signal to DAC, Signal of Latch & L/R select, Signal
32	SMP1	O	for Sampling Hold
33	LRCLK	O	Output of signal to DAC, Signal of Latch & L/R select, Signal
34	SMP	O	for Sampling Hold
35	DFOUT	O	Output of signal to DAC, Signal of Latch & L/R select, Signal for Sampling Hold
36	DACLK	O	Output of signal to DAC, Signal of Latch & L/R select, Signal for Sampling Hold
37	TESTB	O	For TEST. Normal time is non connection.
38	TESTC	O	For TEST. Normal time is non connection.
39	CK2	O	For output of signal that Comply with CD-ROM
40	ROMOUT	O	For output of signal that Comply with CD-ROM
41	C2FLCK	O	For output of signal that Comply with CD-ROM
42	C2F	O	For output of signal that Comply with CD-ROM
43	DOUT	O	Output of DIGITAL OUT
44	SBSY	O	Synchronizing signal of sub-code block.
45	EFLG	O	For correction monitor of C1, C2, single, double.
46	PW	O	SFSY is Synchronizing signal of sub-code & frame. Clock of
47	SFSY	O	eighth send to SBCK then read out the sub-code of P, Q, R, S,
48	SBCK	I	T, U, V, & W.
49	FSX	O	Output of Synchronizing signal (7.35KHz)
50	WRQ	O	Data sub-code Q pass the CRC check then WRQ do "H". It
51	RWC	I	detect at external, Data read out from SQOUT by send the
52	SQOUT	O	CQCK. RWC set the "H" by Micro Processor then it let
53	$\overline{\text{COIN}}$	I	command by send with Synchronizing CQCK command data.
54	$\overline{\text{CQCK}}$	I	
55	RES	I	Turn on the Power Supply time : Once "L"
56	M/L	I	Data of SQOUT want at the LBS first time : M/L set the "L".
57	$\overline{\text{LASER}}$	O	This output can control at Serial Control from Micro Processor
58	16M	O	16M Output (16.9344MHz)
59	4M	O	4M Output (4.2336MHz)
60	CONT	O	This output can control at Serial Control from Micro Processor
61	TEST5	I	For TEST. Normal time is non connection.
62	CS	I	Chip select Terminal. This terminal "L" : LC7866 is active (Internal Resistor : Pull Down)
63	XIN	I	Connection Terminal of crystal oscillation (16.9344MHz)
64	XOUT	O	Connection Terminal of crystal oscillation (16.9344MHz)

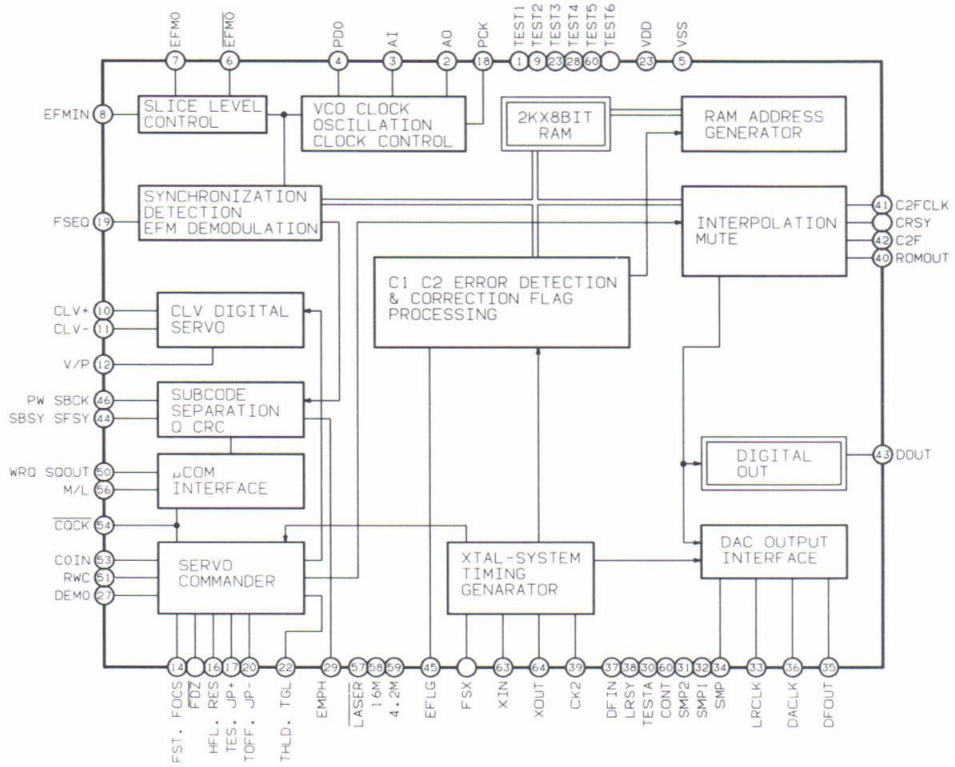

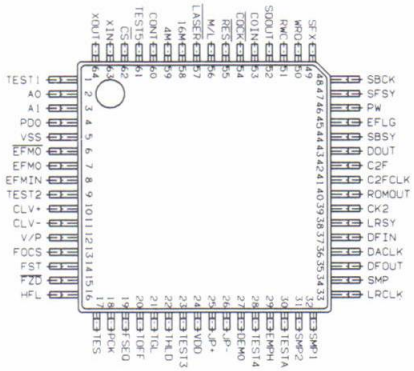

IC BLOCK DIAGRAM (CD)

IC105 SM5870DS (D / A Converter)

No.	PIN NAME	I/O	FUNCTION
1	XTO	O	Output Terminal of Oscillation
2	XVSS		GND Terminal of Crystal Route (0V)
3	CKSLN	I	Frequency Select of XTI, CKO
4	CKO	O	Oscillation Part, Output of Clock
5	TSTN	I	Test Terminal H = Normal, L = Test Mode
6	NODN	I	
7	ATTN	I	

ATTN		MODN H	MODN L
	H	Release	Soft Mute
	L	Soft Mute	Hold

No.	PIN NAME	I/O	FUNCTION
8	LRCI	I	Sample rate (fs) Clock of Input Data H = L-ch L = R-ch
10	DIN	I	Bit Clock of Input Data
11	DFS1	I	
12	DFS2	I	

DSF2		DSF1 L	DSF1 H
	L	De-Emphasis On 44.1kHz	De-Emphasis Off
	H	De-Emphasis On 48.0kHz	De-Emphasis On 32.0kHz

No.	PIN NAME	I/O	FUNCTION
13	MOTEO	O	Output of nfinity Zero Detector
14	RSTN	I	System Reset H = Normal, L = Reset
15	DVSS		Digital GND Terminal (0V)
16	DVDD		Digital VDD Terminal (5V)
17	AVDD1		Analog VDD Terminal 1 (5V)
18	LO	O	PWM Output of L-channel (+)
19	AVSS1		Analog GND Terminal 1 (0V)
20	LON	O	PWM Output of L-channel (-)
21	AVDD2		Analog VDD Terminal 2 (5V)
22	AVDD3		Analog VDD Terminal 3 (5V)
23	RON	O	PWM Output of R-channel (-)
24	AVSS2		Analog GND Terminal 2 (0V)
25	RO	O	PWM Output of R-channel (+)
26	AVDD		Analog VDD Terminal 4 (5V)
27	XVDD		VDD Terminal of Crystal Route (5V)
28	XTI	I	Input Terminal of Oscillation

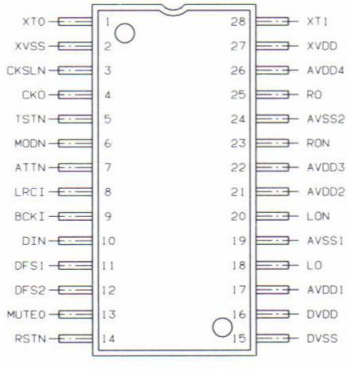

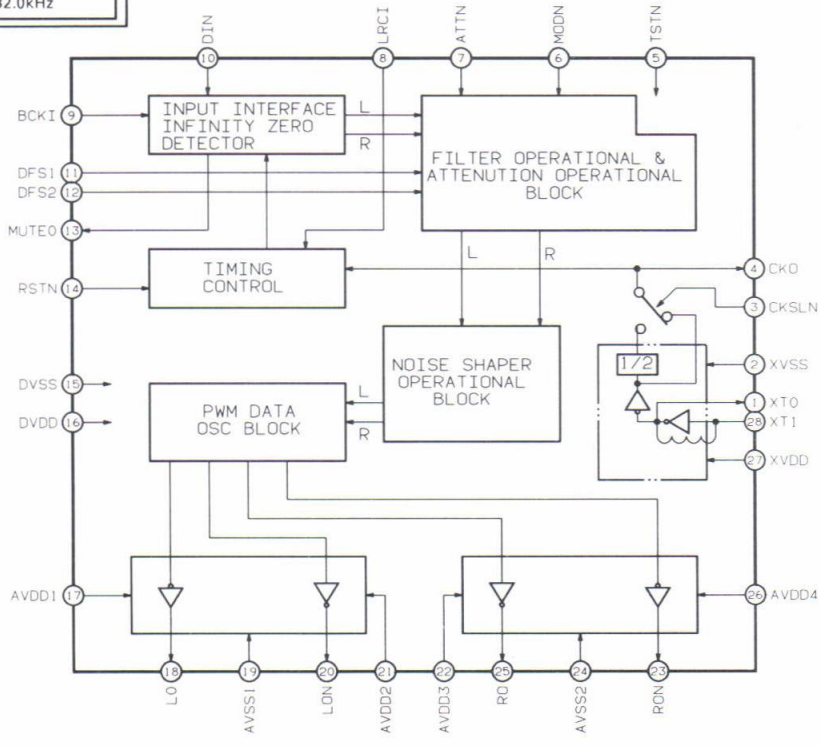

IC106 XRA15218F (Dual Operational Amplifier)

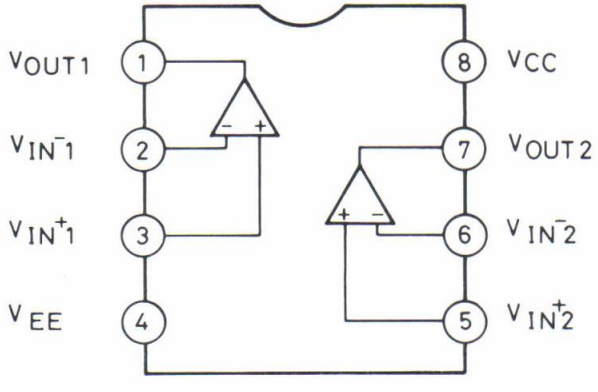

IC BLOCK DIAGRAM (CD MICON)

IC131 μPD65116GF-F56-3BE (Micro Processor)

PIN No.	SIGNAL NAME	PORT NAME	DESCRIPTION	I/O
1	CD MUTE	P41	Control Signal of Analogue Muting	O
2	P CONT	P40	Control Signal of Power Supply for CD Circuit	O
3	NC	P53	Not Used (Open)	O
4	FC	P52	Function Control C Signal	O
5	FB	P51	Function Control B Signal	O
6	FA	P50	Function Control A Signal	O
7	RESET	RESET	System Reset	I
8	X2	XO	X'tal Out (4.19 MHz)	O
9	X1	XI	X'tal In (4.19 MHz)	I
10	V CHK	P63	Detection Signal of the Stoppage Failure of Electricity	I
11	V DEC O	P62	Detection Signal Out of Voltage Drop	O
12	V DEC I	P61	Detection Signal In of Voltage Drop	I
13	TU MUTE	P60	Control Signal of Tuner Muting	O
14	NC	P73	Not Used (Ground)	I
15	NC	P72	Not Used (Ground)	I
16	DUB IN	P71	Dubbing Signal	I
17	TA AF	P70	Function Signal for Tape Deck	I
18	NC	P83	Not Used (Open)	O
19	NC	P82	Not Used (Open)	O
20	CLV GAIN	P81	Select Signal for CLV (Constant Linear Velocity) Gain	O
21	AMP SO	P80	Data Out to AD Micro Processor (μPD75512)	O
22	AMP SCK	P93	Clock Out to AD Micro Processor (μPD75512)	O
23	TRAY LED	P92	CD Tray Indicator LED	O
24	SUB SO	P91	Data Out to Sub Micro Processor (μPD73508)	O
25	SUB SCK	P90	Clock Out to Sub Micro Processor (μPD73508)	O
26	VSS	VSS	Ground	
27	SUB BUSY	P13 / INT3	Busy Signal In from Sub Micro Processor (μPD73508)	I
28	AMP BUSY	P12 / INT2	Busy Signal In from AD Micro Processor (μPD75512)	I
29	WRQ	P11 / INT1	DSP (Digital Signal Processor) Interface [Sub Q Request]	I
30	IR	P10 / INT0	Infrared Ray Receiving (Remocon) Signal	I
31	KEY3	PTH03	Key Input Signal	I
32	KEY2	PTH02	Key Input Signal	I
33	KEY1	PTH01	Key Input Signal	I
34	KEY0	PTH00	Key Input Signal	I
35	NC	TI0	Not Used (Open)	
36	NC	TI1	Not Used (Open)	
37	CLOSE	P23	Control Signal of Tray Close	O
38	CLK OUT	P22 / PCL	Clock Signal for Adjustment	O
39	OPEN	P21 / PT01	Control Signal of Tray Open	O
40	RWC	P20 / PT00	DSP (Digital Signal Processor) Interface [Command Latch]	O
41	SQOUT	P03 / SI	DSP (Digital Signal Processor) Interface [Sub Q Data]	I
42	COIN	P02 / SO	DSP (Digital Signal Processor) Interface [Command Data]	O
43	COCK	P01 / SCK	DSP (Digital Signal Processor) Interface [Clock]	O
44	DRF	P00 / INT4	DRF Signal	I
45	OPN SW	P123	Switch Detection Signal for Open End of CD Tray	I
46	LIM SW	P122	Switch Detection Signal for Limit of Pickup	I
47	NC	P121	Not Used (Ground)	I
48	NC	P120	Not Used (Ground)	I
49	NC	P133	Not Used (Ground)	I
50	NC	P132	Not Used (Ground)	I
51	SW PRE	P131	Select Signal from ON / OFF Switch for Pre Muting	I
52	SW HI AC	P130	Select Signal from ON / OFF Switch for High Speed Access	I
53	SW DAC	P143	Select Signal from ON / OFF Switch for DAC (Digital to Analogue Converter)	I
54	SW BAND	P142	Select Signal from TU / BAND or FM Switch for Remocon Function	I
55	SW PST	P141	Select Signal from PST UP or SCAN Switch for Remocon Function	I
56	SW S D	P140	Select Signal from S / D Series Switch	I
57	NC	NC	Not Connection	
58	VDD	VDD	Power Supply +5V	
59	PULL UP	P33	Power supply to Pull Up Resistors	O
60	NC	P32	Not Used (Open)	O
61	DSP RES	P31	Reset Control Signal for DSP (Digital Signal Processor)	O
62	ATT	P30	DAC (Digital to Analogue Converter) Interface [Data]	O
63	SHIFT	P43	DAC (Digital to Analogue Converter) Interface [Clock]	O
64	LATCH	P42	DAC (Digital to Analogue Converter) Interface [Latch]	O

IC BLOCK DIAGRAM (CD & TUNER)

IC132 LA6510 (Dual Power Operational Amplifier)

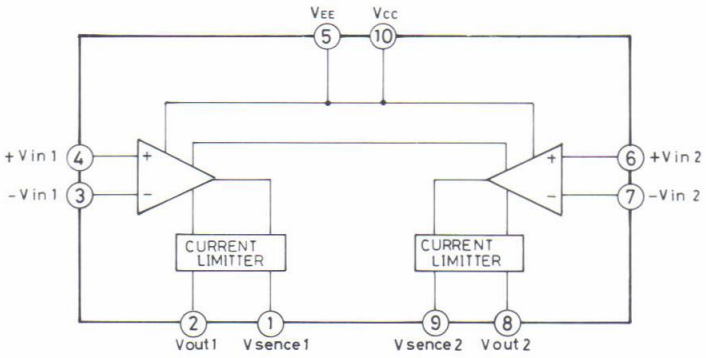

IC133 NJM78M12FA (3-Terminal Voltage Regulator)

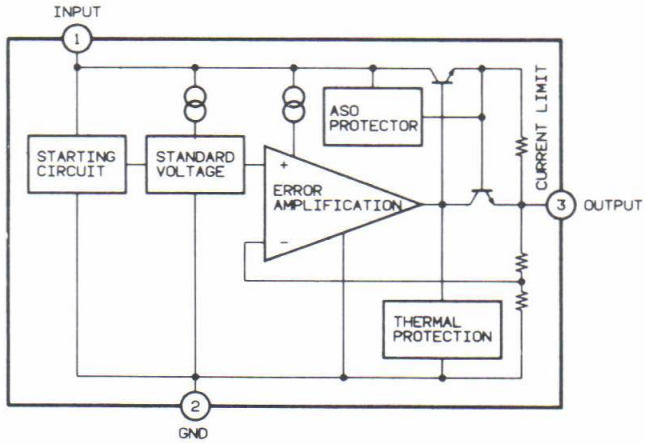

IC201 LA1265-AUD (Tuner IF System)

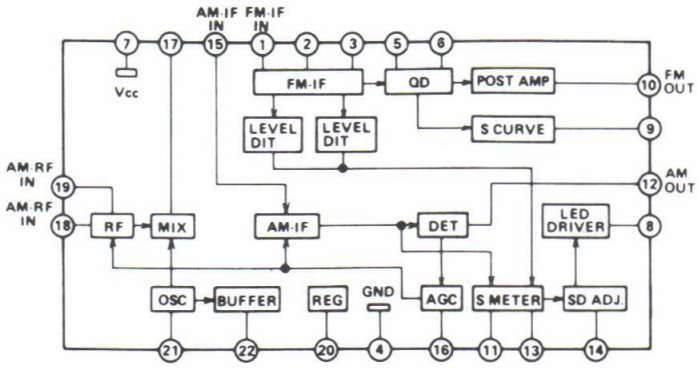

IC202 LA3361 (FM PLL MPX. Stereo Demodulator)

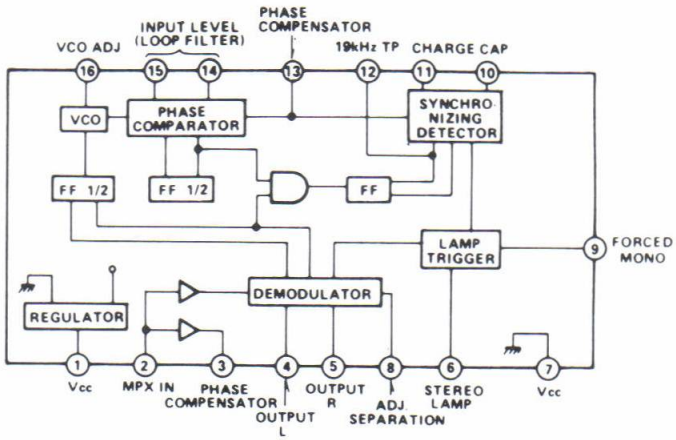

IC203 LM7001 (PLL Frequency Synthesizer with Pre-Scaer)

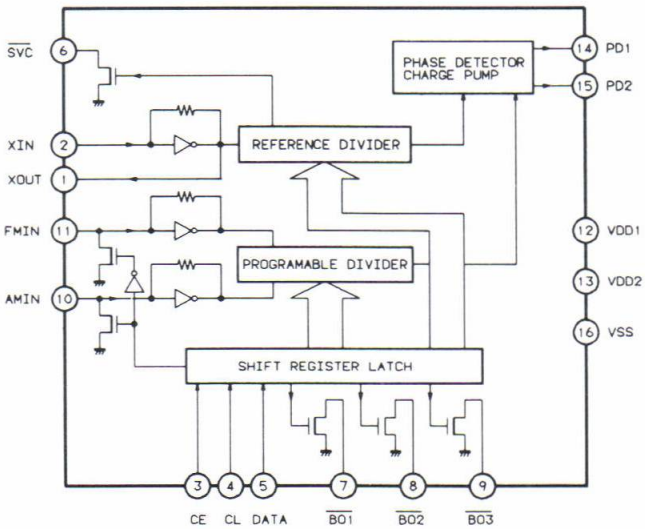

IC BLOCK DIAGRAM (TUNER & LCD DRIVE MICON)

IC251 μPD75306GF-225-3B9 (Micro Processor)

PIN No.	SIGNAL NAME	PORT NAME	DESCRIPTION	I/O	CONNECT
1	SEG12	S12	Segment of Liquid Crystal Display		LCD
2	SEG13	S13	Segment of Liquid Crystal Display		LCD
3	SEG14	S14	Segment of Liquid Crystal Display		LCD
4	SEG15	S15	Segment of Liquid Crystal Display		LCD
5	SEG16	S16	Segment of Liquid Crystal Display		LCD
6	SEG17	S17	Segment of Liquid Crystal Display		LCD
7	SEG18	S18	Segment of Liquid Crystal Display		LCD
8	SEG19	S19	Segment of Liquid Crystal Display		LCD
9	SEG20	S20	Segment of Liquid Crystal Display		LCD
10	SEG21	S21	Segment of Liquid Crystal Display		LCD
11	SEG22	S22	Segment of Liquid Crystal Display		LCD
12	SEG23	S23	Segment of Liquid Crystal Display		LCD
13	SEG24	S24 / BP0	Segment of Liquid Crystal Display		LCD
14	SEG25	S25 / BP1	Segment of Liquid Crystal Display		LCD
15	SEG26	S26 / BP2	Segment of Liquid Crystal Display		LCD
16	SEG27	S27 / BP3	Segment of Liquid Crystal Display		LCD
17	AUTO	S28 / BP4	Auto Tuning Signal ACTIVE : HIGH LEVEL	O	TUNER
18	NC	S29 / BP5	Not Used (Open)	O	OPEN
19	NC	S30 / BP6	Not Used (Open)	O	OPEN
20	NC	S31 / BP7	Not Used (Open)	O	OPEN
21	COM 0	COM0	Common of Liquid Crystal Display		LCD
22	COM 1	COM1	Common of Liquid Crystal Display		LCD
23	COM 2	COM2	Common of Liquid Crystal Display		LCD
24	COM 3	COM3	Common of Liquid Crystal Display		LCD
25	BIAS	BIAS	Bias of Liquid Crystal Display		
26	VLC0	V_{LC0}	Power Supply for Drive of Liquid Crystal Display		
27	VLC1	V_{LC1}	Power Supply for Drive of Liquid Crystal Display		
28	VLC2	V_{LC2}	Power Supply for Drive of Liquid Crystal Display		
29	STEP	P40	AM Step Selection 9kHz (V_{DD}) / 10kHz (V_{SS})	I	TUNER
30	ST	P41	ST Signal ACTIVE : LOW LEVEL	I	TUNER
31	SD	P42	SD Signal ACTIVE : LOW LEVEL	I	TUNER
32	NC	P43	Not Used (Ground)	I	V_{SS}
33	VSS	V_{SS}	Ground		
34	CE (S)	P50	Data Signal from LM7001 (For S Series)	O	TUNER
35	CLK (S)	P51	Data Signal from LM7001 (For S Series)	O	TUNER
36	DO (S)	P52	Data Signal from LM7001 (For S Series)	O	TUNER
37	MONO (S)	P53	Compulsion Monaural (For S Series) ACTIVE : HIGH LEVEL	O	TUNER
38	NC	P00 / INT4	Not Used (Ground)	I	V_{SS}
39	SCK	P01 / SCK	Clock Signal In from Main Micro Processor (μPD65117)	I	MAIN μCON
40	NC	P02 / SO / SB0	Not Used (Ground)		V_{SS}
41	SI	P03 / SI / SB1	Data In from Main Micro Processor (μPD65117)	I	MAIN μCON
42	NC	P10 / INT0	Not Used (Ground)	I	V_{SS}
43	NC	P11 / INT1	Not Used (Ground)	I	V_{SS}
44	NC	P12 / INT2	Not Used (Ground)	I	V_{SS}
45	NC	P13 / T10	Not Used (Ground)	I	V_{SS}
46	WIDE	P20 / PT100	Select Signal for AM Signal Type Wide (HIGH) / Narrow (LOW)	O	TUNER
47	PCON (S)	P21	Tuner Power Signal (For S Series) ACTIVE : HIGH LEVEL	O	TUNER
48	MUTE	P22 / PCL	Tuner Mute Signal ACTIVE : HIGH LEVEL	O	TUNER
49	BUSY	P23 / BUZ	Busy Signal Out to Main Micro Processor (μPD65117)	O	MAIN μCON
49	BUSY	P23 / BUZ	Busy Signal Out to Main Micro Processor (μPD65117)	O	MAIN μCON
50	S0	P30 / LCDCL	Initial Set for User = Country (Open or Ground)	I	
51	S1	P31 / SYNC	Initial Set for User = Country (Open or Ground)	I	
52	S2	P32	Initial Set for User = Country (Open or Ground)	I	
53	S3 (FM MUTE)	P33	Select Signal for FM Auto Mute SET (Open) / NOT (V_{SS})	I	
54	VDD	V_{DD}	Power Supply +5V		V_{DD}
55	NC	XT1	Not Used (Ground) OSC X'tal Terminal for Main Clock	I	V_{SS}
56	NC	XT2	Not Used (Open) OSC X'tal Terminal for Main Clock	O	
57	NC	NC	Non Connection		
58	X1	XI	X'tal In (4.194304 MHz)	I	
59	X2	XO	X'tal Out (4.194304 MHz)	O	
60	S4 (12H / 24H)	P60 / KR0	Select Signal for CLOCK 24H (Open) / 12H (V_{SS})	I	
61	S5 (AM IF)	P61 / KR1	Select Signal for AM IF SET (Open) / NOT (V_{SS})	I	TUNER
62	S6 (D / S)	P62 / KR2	Select Signal for D & S Series SET (Open) / NOT (V_{SS})	I	
48	MUTE	P22 / PCL	Tuner Mute Signal ACTIVE : HIGH LEVEL	O	TUNER
63	MONO (D)	P63 / KR3	Compulsion Monaural (For D Series) ACTIVE : HIGH LEVEL	O	TUNER
64	DO (D)	P70 / KR4	Data Signal from LM7001 (For D Series)	O	TUNER
65	CLK (D)	P71 / KR5	Data Signal from LM7001 (For D Series)	O	TUNER
66	CE (D)	P72 / KR6	Data Signal from LM7001 (For D Series)	O	TUNER
67	PCON (D)	P73 / KR7	Tuner Power Signal (For D Series) ACTIVE : HIGH LEVEL	O	TUNER
68	RESET	RESET	System Reset Signal		RESET CIRCUIT
69	SEG0	S0	Segment of Liquid Crystal Display		LCD
70	SEG1	S1	Segment of Liquid Crystal Display		LCD

IC BLOCK DIAGRAM (FUNCTION SELECTOR)

PIN No.	SIGNAL NAME	PORT NAME	DESCRIPTION	I/O	CONNECT
71	SEG2	S2	Segment of Liquid Crystal Display		LCD
72	SEG3	S3	Segment of Liquid Crystal Display		LCD
73	SEG4	S4	Segment of Liquid Crystal Display		LCD
74	SEG5	S5	Segment of Liquid Crystal Display		LCD
75	SEG6	S6	Segment of Liquid Crystal Display		LCD
76	SEG7	S7	Segment of Liquid Crystal Display		LCD
77	SEG8	S8	Segment of Liquid Crystal Display		LCD
78	SEG9	S9	Segment of Liquid Crystal Display		LCD
79	SEG10	S10	Segment of Liquid Crystal Display		LCD
80	SEG11	S11	Segment of Liquid Crystal Display		LCD

IC252 MC74HC138AN (LED Driver)

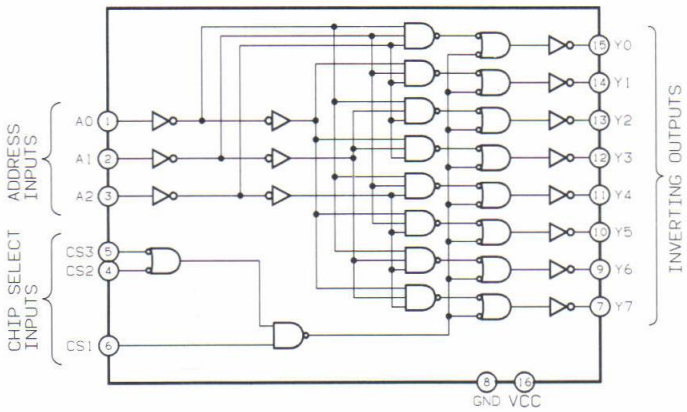

TRUTH TABLE

INPUTS						OUTPUTS							
CHIP SELECT			ADDRESS										
CS1	CS2	CS3	A2	A1	A0	Y0	Y1	Y2	Y3	Y4	Y5	Y6	Y7
X	X	H	X	X	X	H	H	H	H	H	H	H	H
X	H	X	X	X	X	H	H	H	H	H	H	H	H
L	X	X	X	X	X	H	H	H	H	H	H	H	H
H	L	L	L	L	L	L	H	H	H	H	H	H	H
H	L	L	L	L	H	H	L	H	H	H	H	H	H
H	L	L	L	H	L	H	H	L	H	H	H	H	H
H	L	L	L	H	H	H	H	H	L	H	H	H	H
H	L	L	H	L	L	H	H	H	H	L	H	H	H
H	L	L	H	L	H	H	H	H	H	H	L	H	H
H	L	L	H	H	L	H	H	H	H	H	H	L	H
H	L	L	H	H	H	H	H	H	H	H	H	H	L

IC261 · 262 MC14051BCP (3-Input 8-Channel Multiplexer / De-Multiplexer)

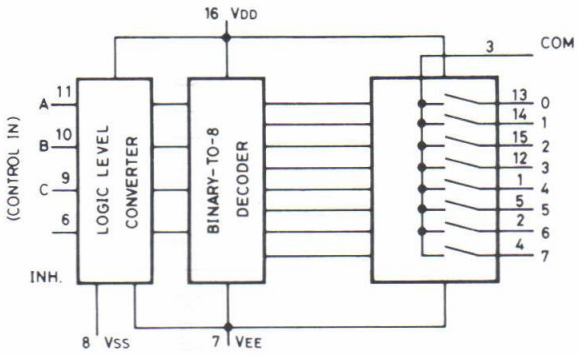

TRUTH TABLE

CONTROL INPUTS				[ON] CHANNEL	
INHIBIT	C	B	A	4051	4052
L	L	L	L	0	0X 0Y
L	L	L	H	1	1X 1Y
L	L	H	L	2	2X 2Y
L	L	H	H	3	3X 3Y
L	H	L	L	4	-----
L	H	L	H	5	-----
L	H	H	L	6	-----
L	H	H	H	7	-----
H	X	X	X	NONE	NONE
X : DON'T CARE				C (4052) : EXCEPT	

IC263 MC14052BCP (2-Input 4-Channel × 2 Multiplexer / De-Multiplexer)

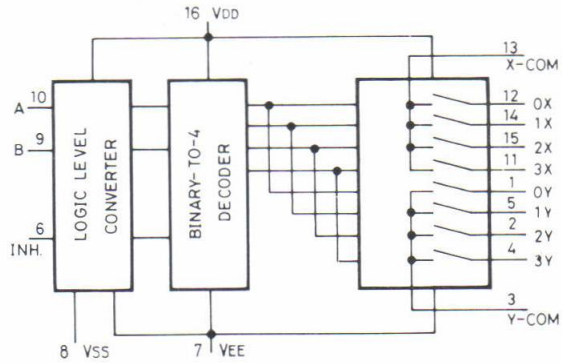

IC264 · 265 NJM6458S-D (Dual Operational Amplifier)

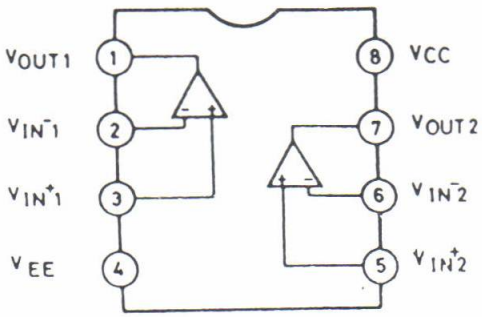

LCD (CT UNIT)

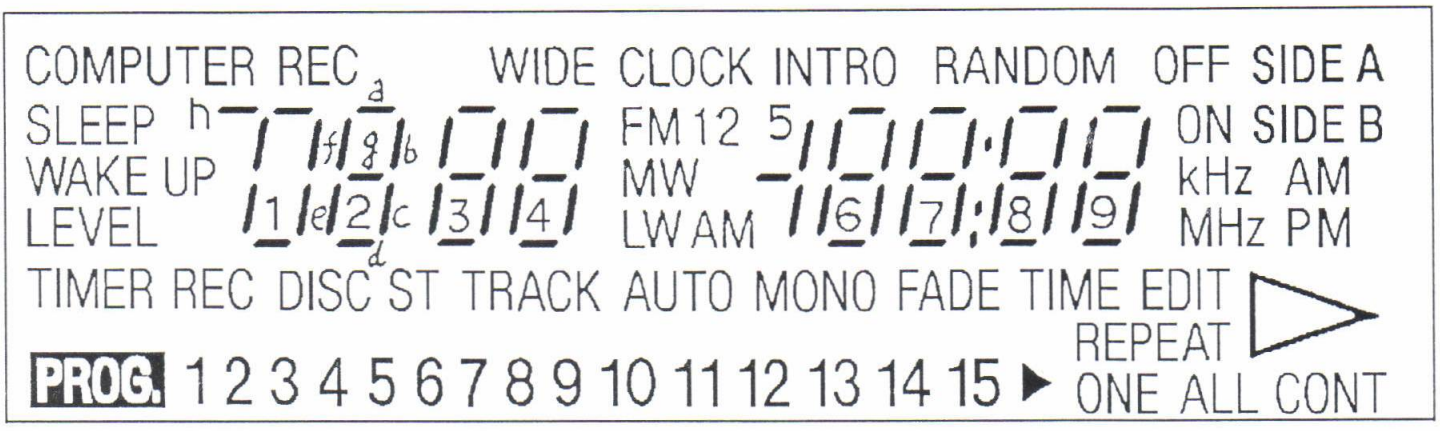

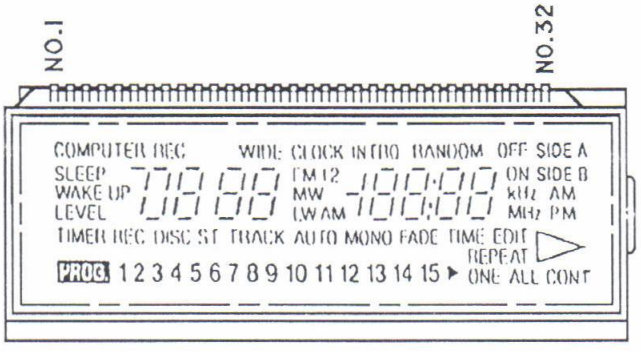

NO.	COM. 1	COM. 2	COM. 3	COM. 4
1	CONT	ALL	ONE	REPEAT
2	13	14	15	▶
3	12	11	10	9
4	5	6	7	8
5	4	3	2	1
6	SLEEP	WAKE UP	TIMER	REC
7	COMP. REC	LEVEL	DISC	PROG.
8	1h	1a.e.f	1b.c	1d
9	2f	2g	2e	2d
10	2a	2b	2c	ST
11	3f	3g	3e	3d
12	3a	3b	3c	TRACK
13	4f	4g	4e	4d
14	4a	4b	4c	AUTO
15	WIDE	FM	MW	LW
16	CLOCK	1 (FM)	2 (FM)	AM

NO.	COM. 1	COM. 2	COM. 3	COM. 4
17	INTRO	5b.c	5g	
18	6f	6g	6e	6d
19	6a	6b	6c	MONO
20	7f	7g	7e	7d
21	7a	7b	7c	FADE
22	RANDM	:	.	TIME
23	8f	8g	8e	8d
24	8a	8b	8c	EDIT
25	9f	9g	9e	9d
26	9a	9b	9c	
27	OFF	ON	KHz	MHz
28	DISE A	DISE B	AM	PM
29	COM. 1			
30		COM. 2		
31			COM. 3	
32				COM. 4

SCHEMATIC DIAGRAM (SYSCON & FRONT)

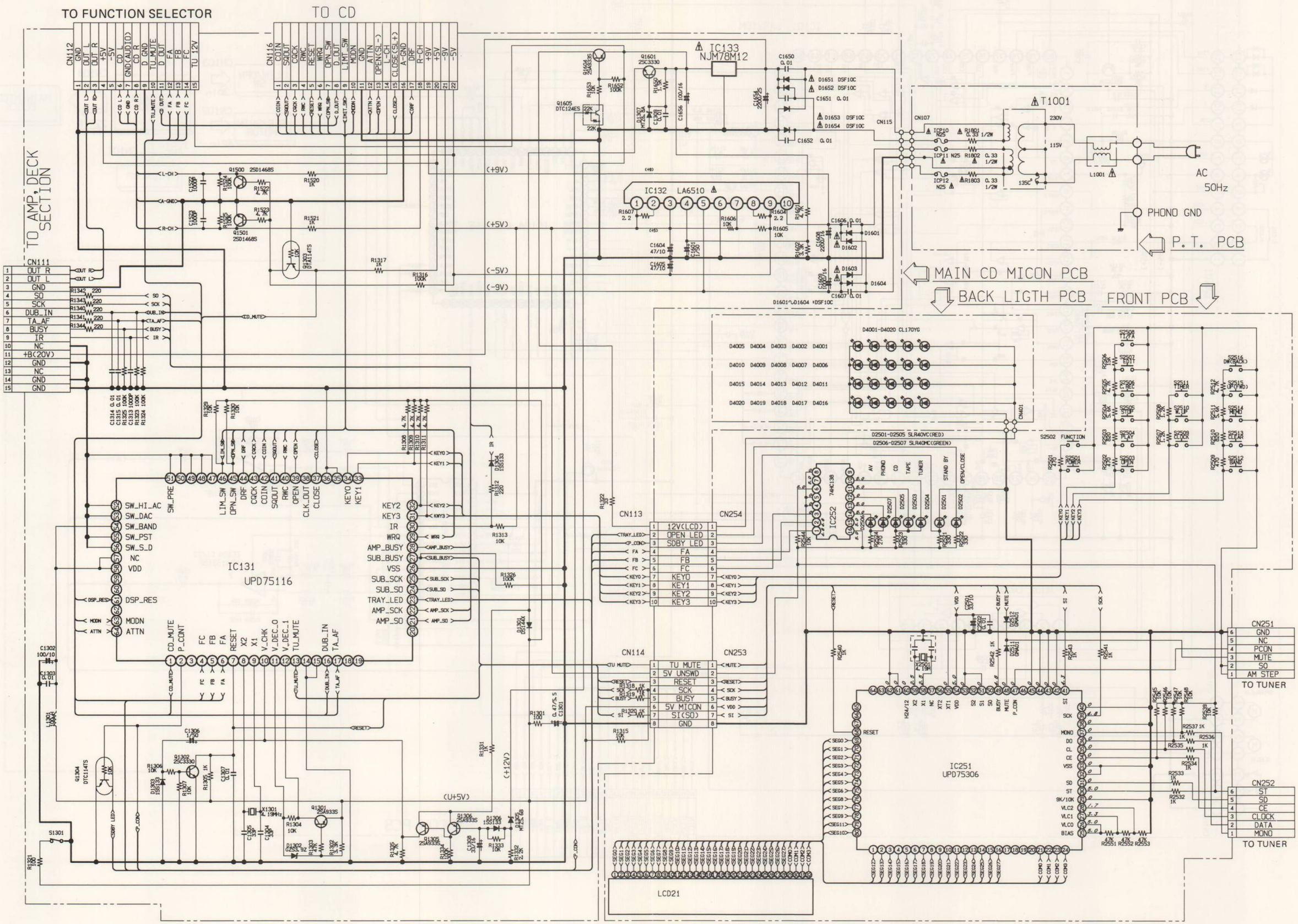

SCHEMATIC DIAGRAM (CD MAIN)

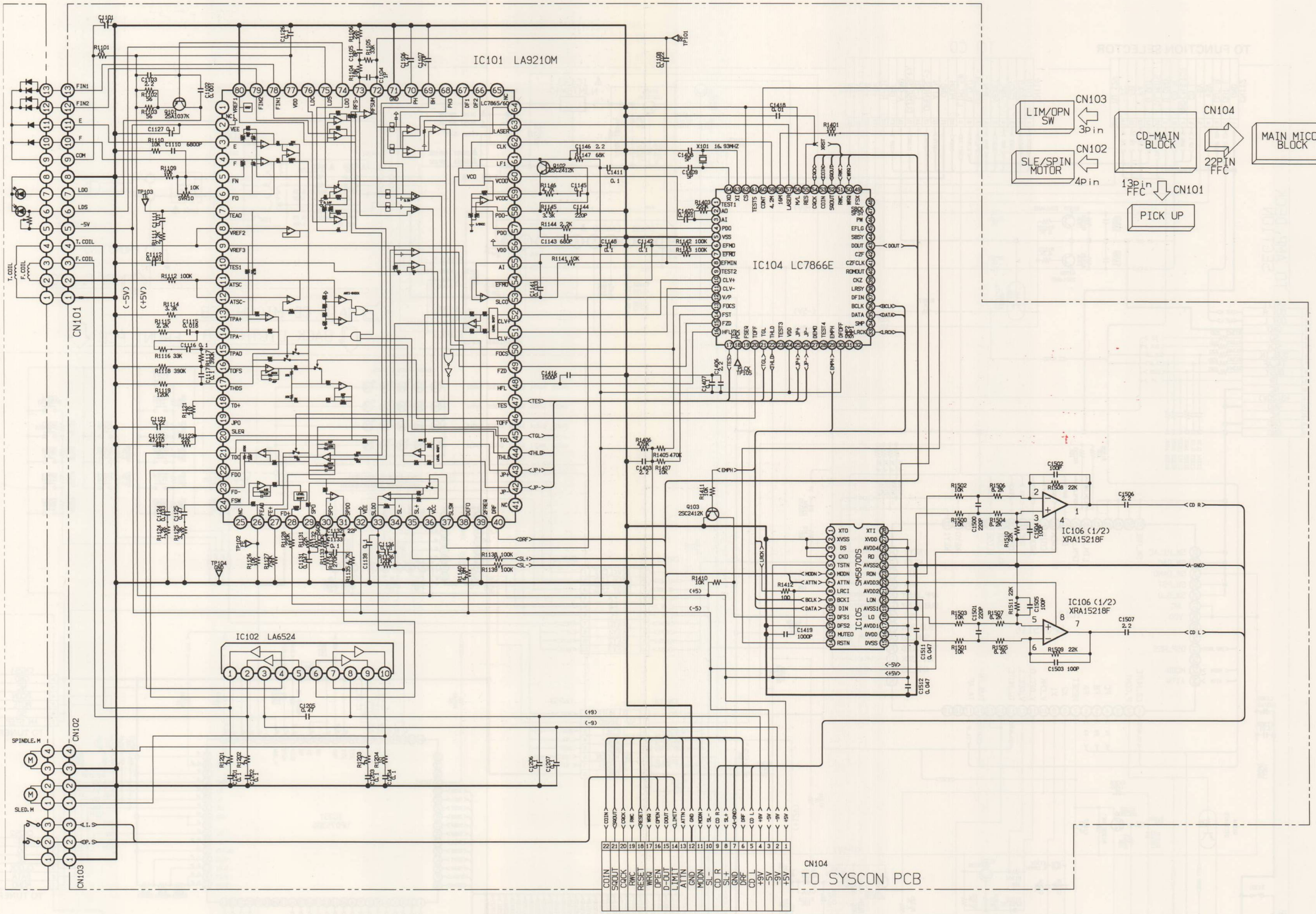

WIRING DIAGRAM (CD)

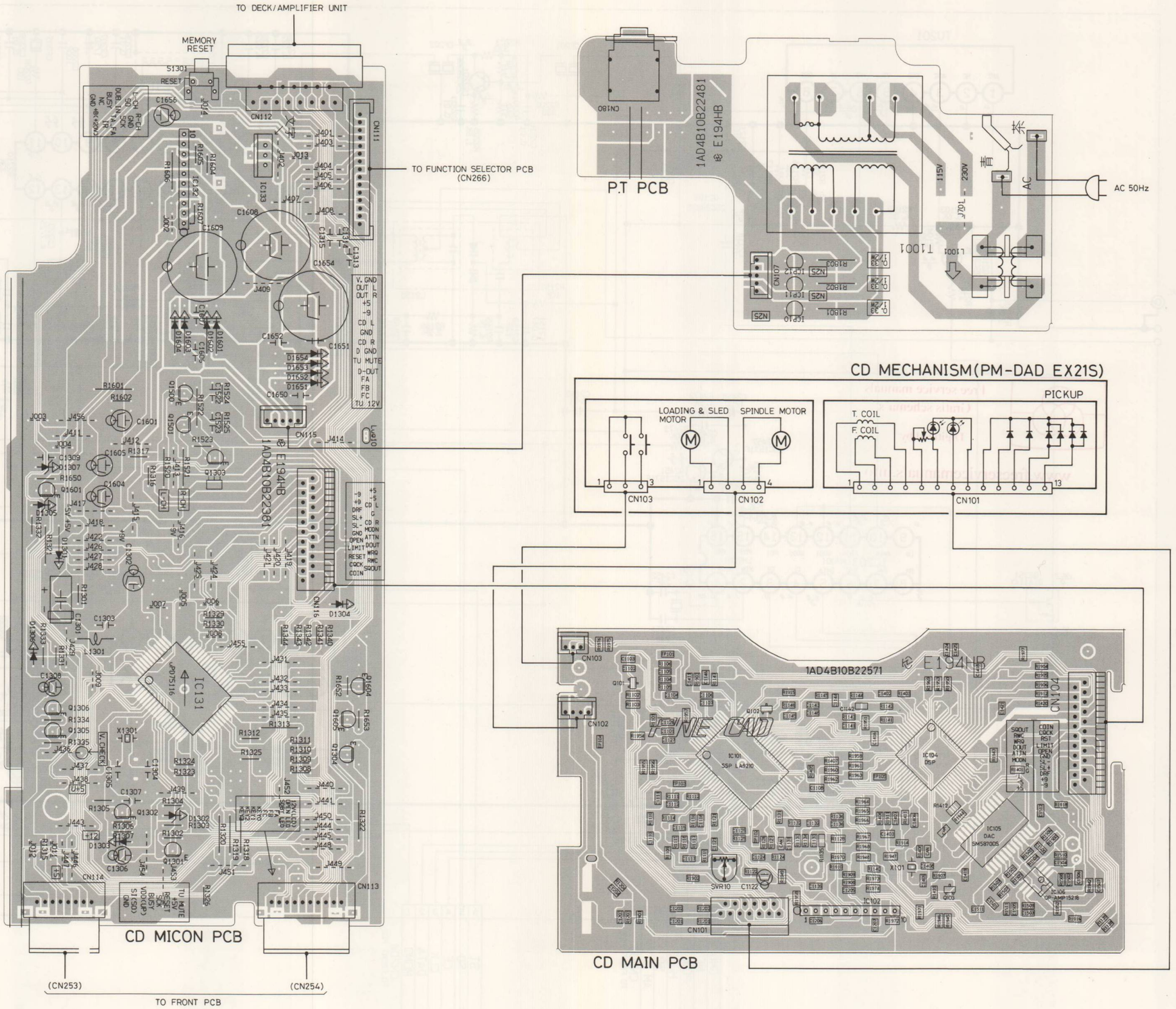

SCHEMATIC DIAGRAM (TUNER)

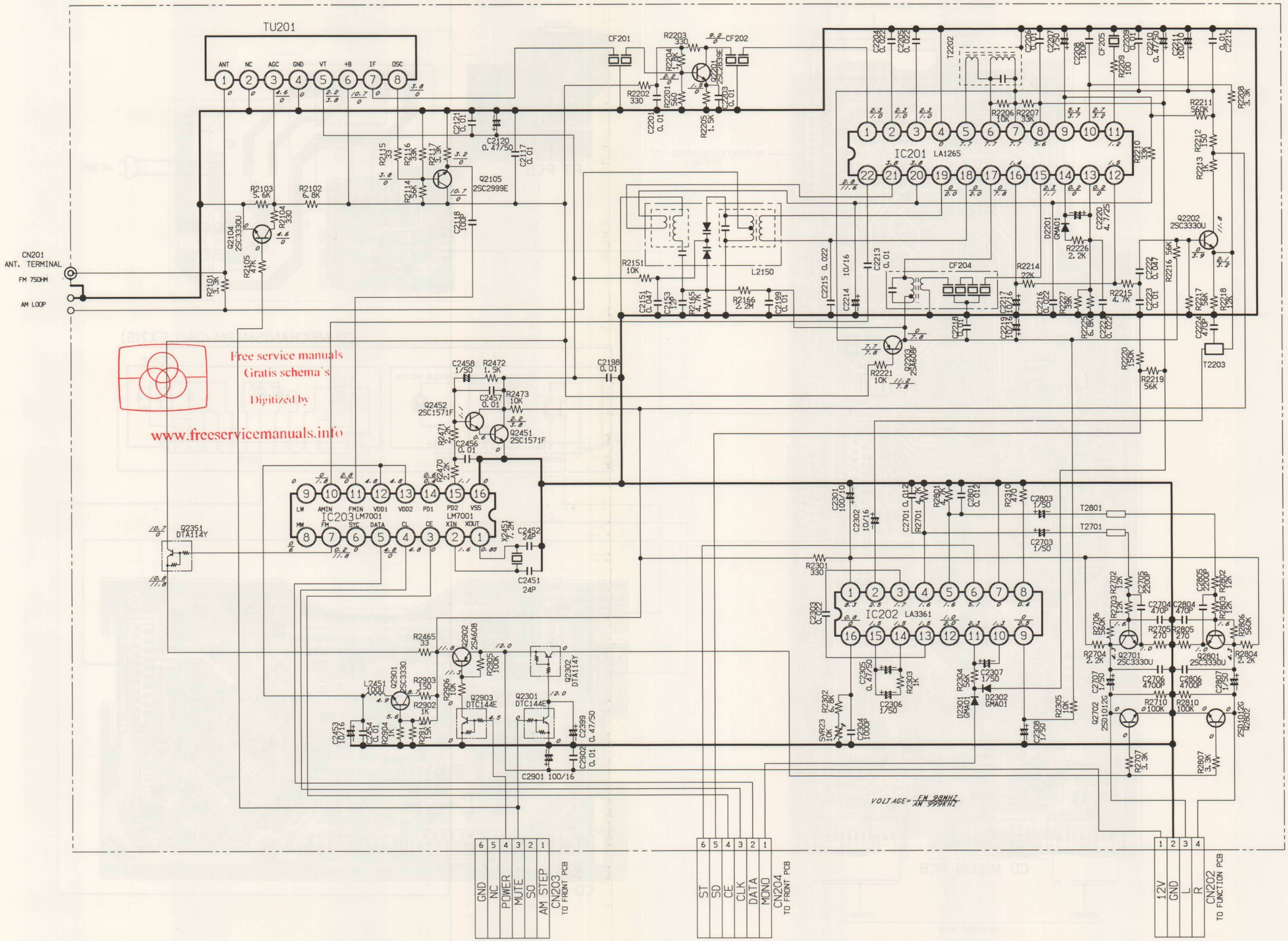

WIRING DIAGRAM (TUNER · FRONT · FUNCTION SELECTOR)

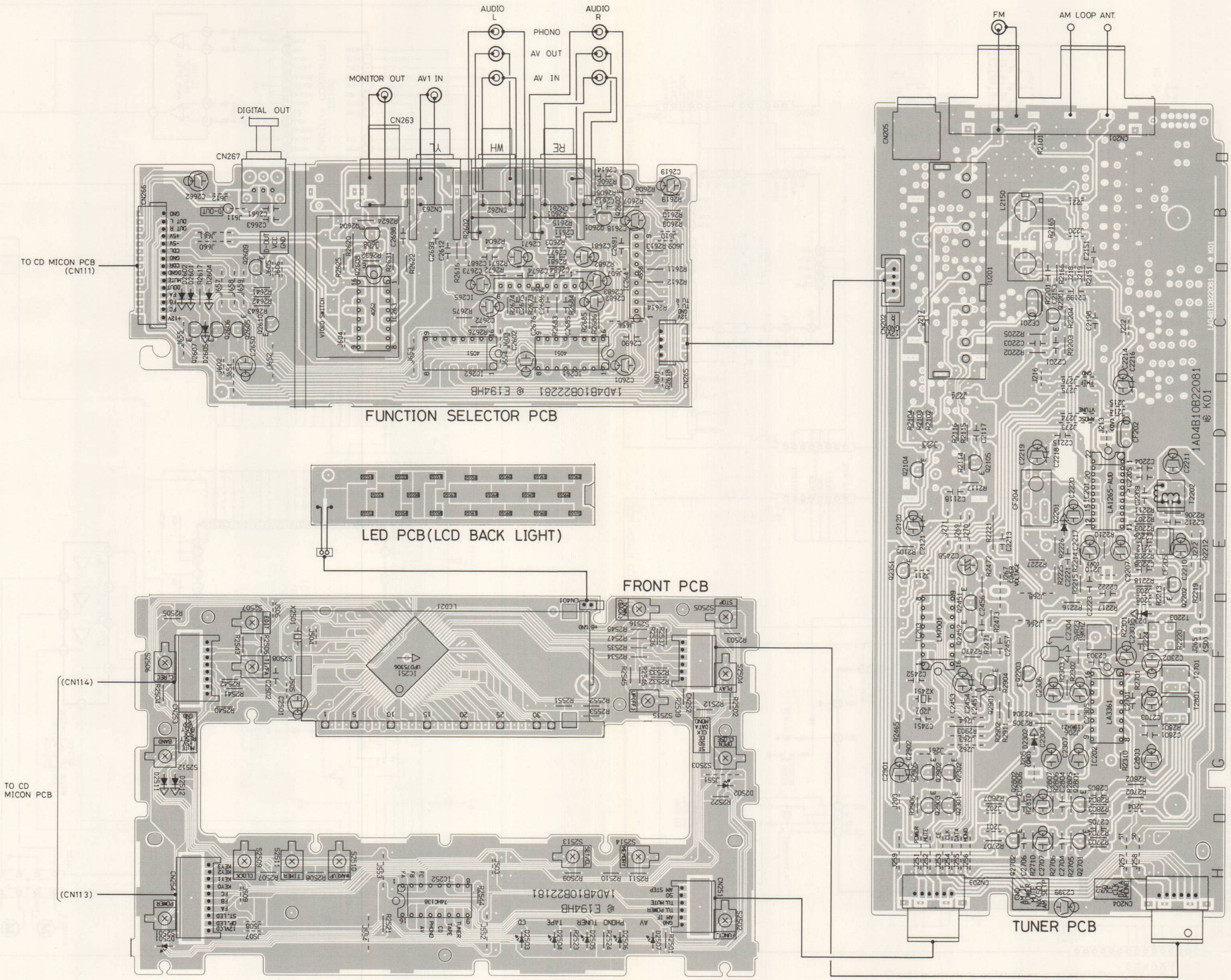

BLOCK DIAGRAM (SYSCON & FRONT)

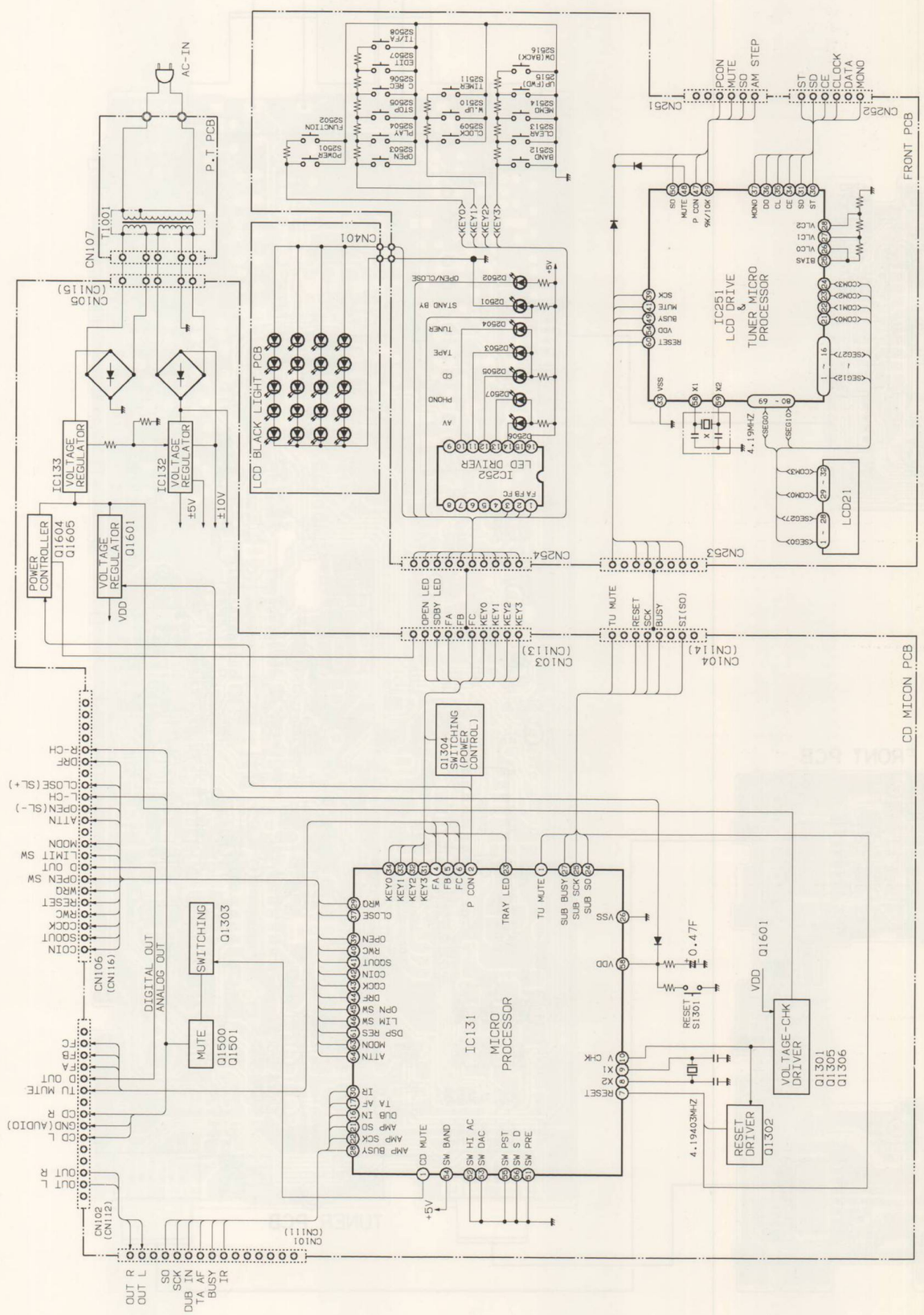

BLOCK DIAGRAM (CD MAIN)

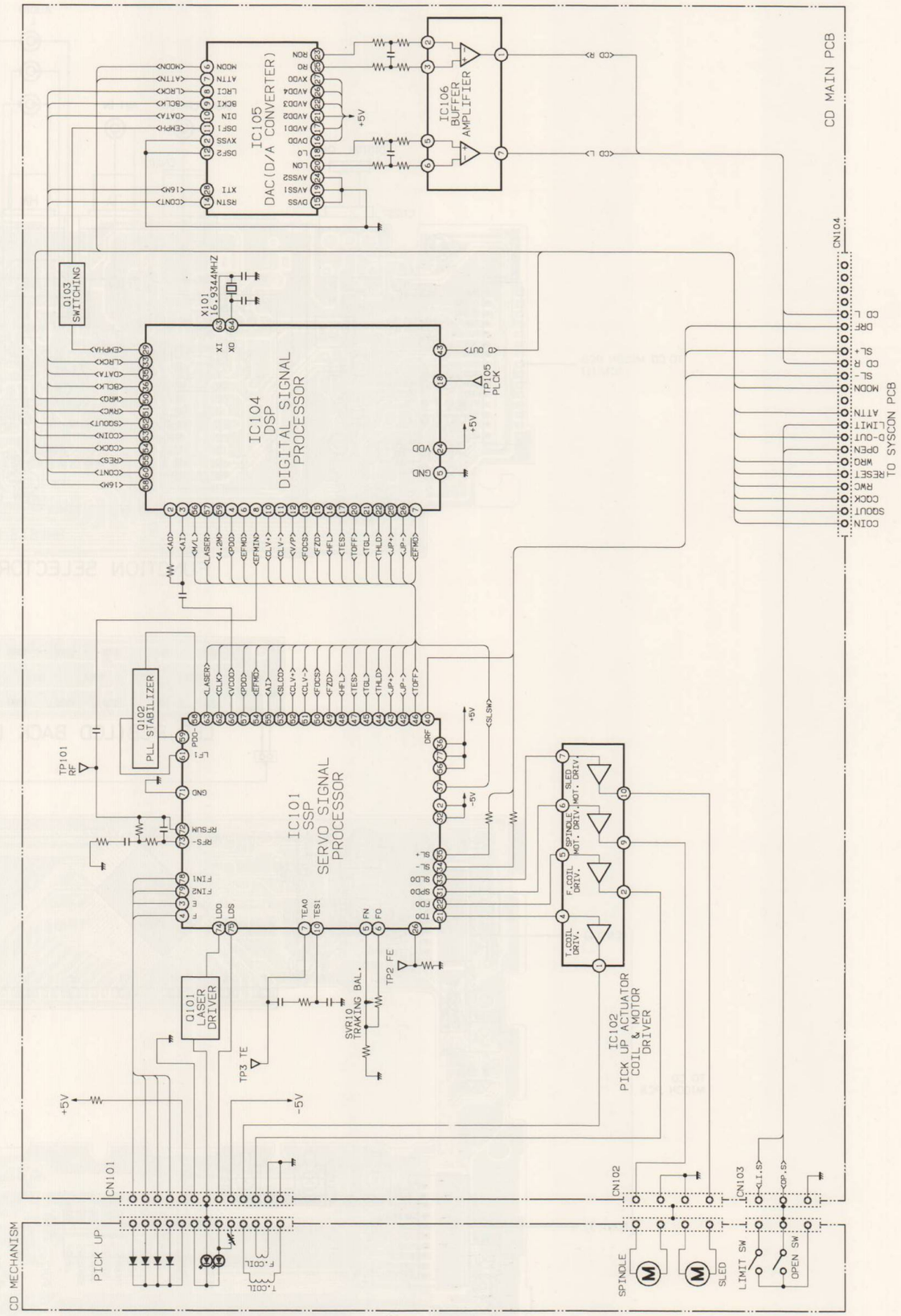

BLOCK DIAGRAM (TUNER)

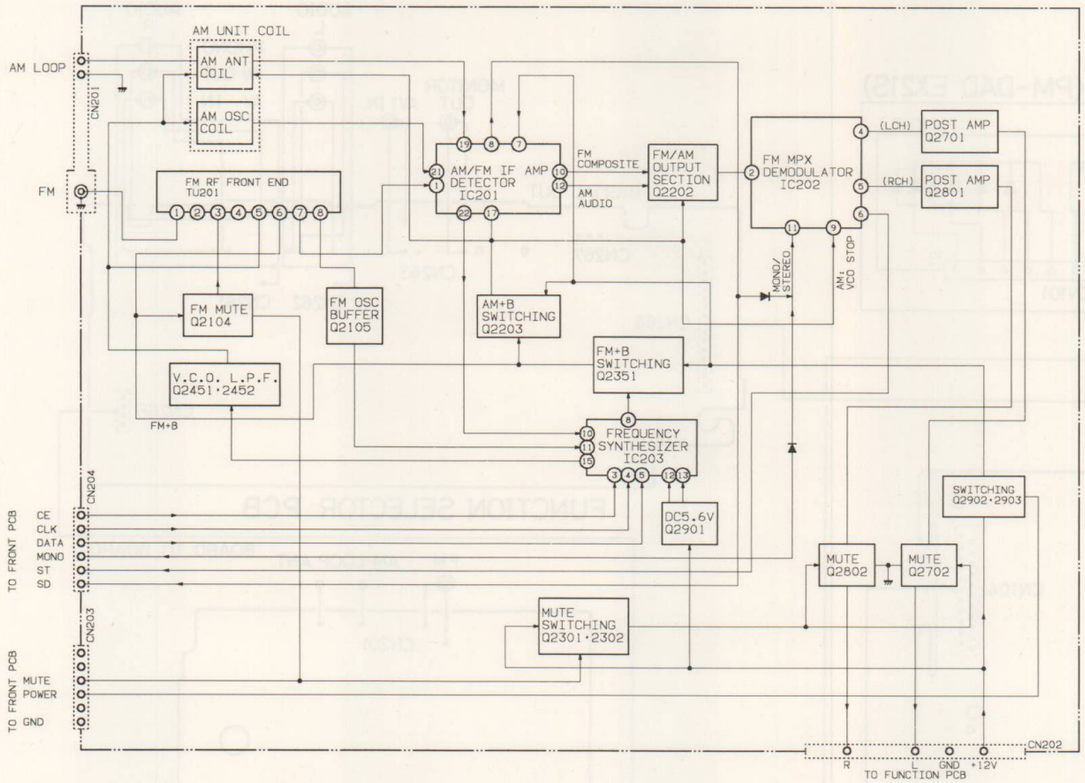

BLOCK DIAGRAM (FUNCTION SELECTOR)

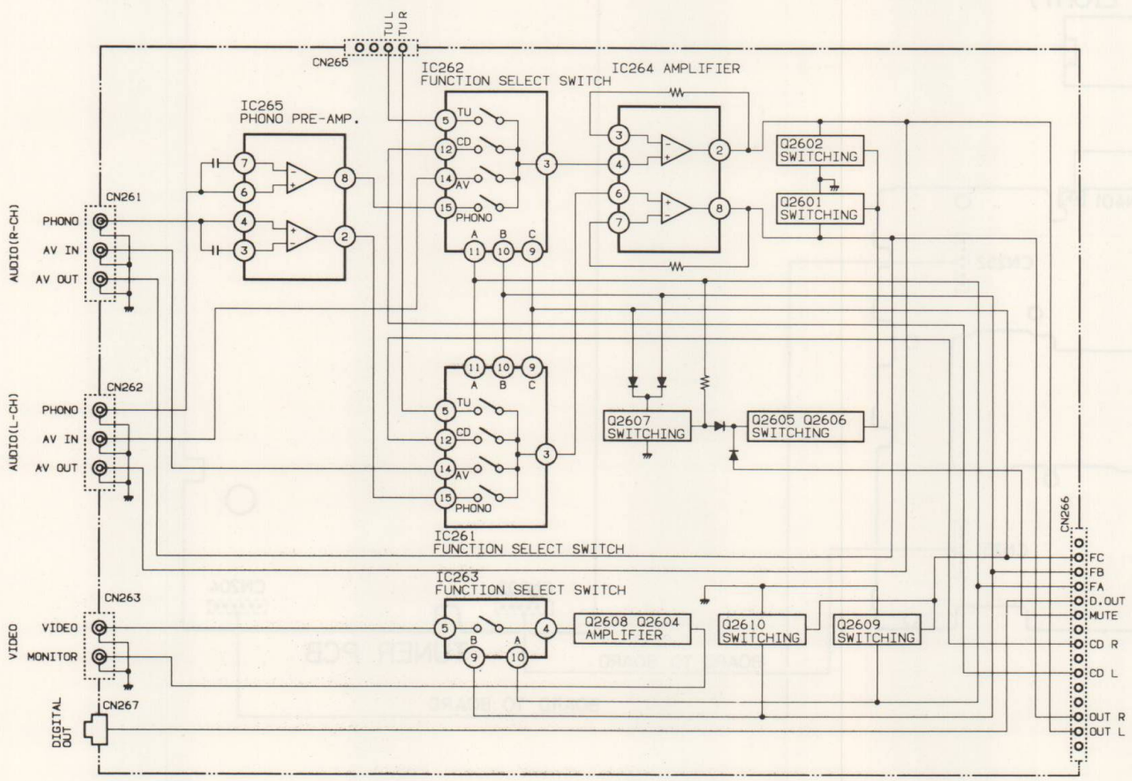

SCHEMATIC DIAGRAM (FUNCTION SELECTOR)

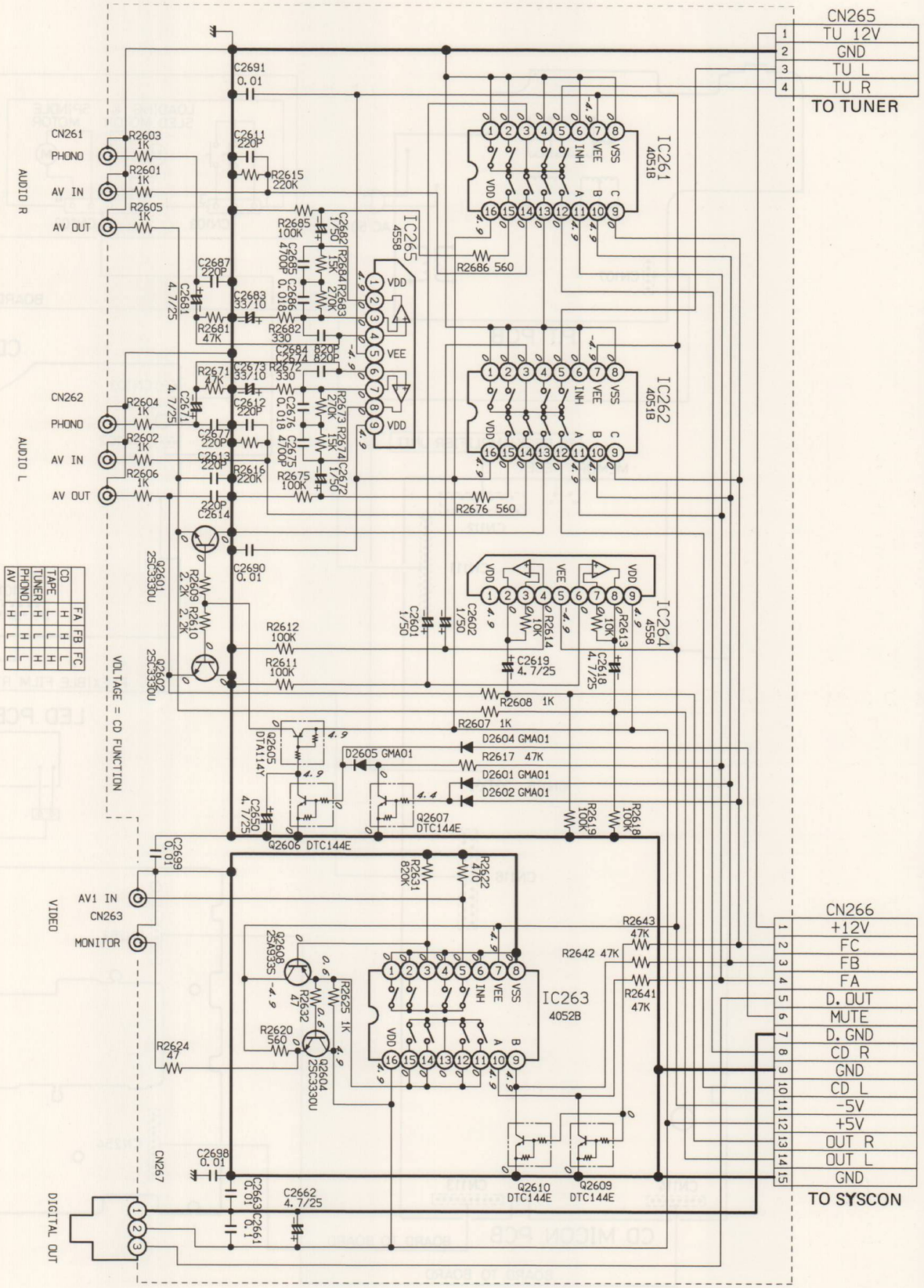

WIRING CONNECTION (TUNER / CD UNIT)

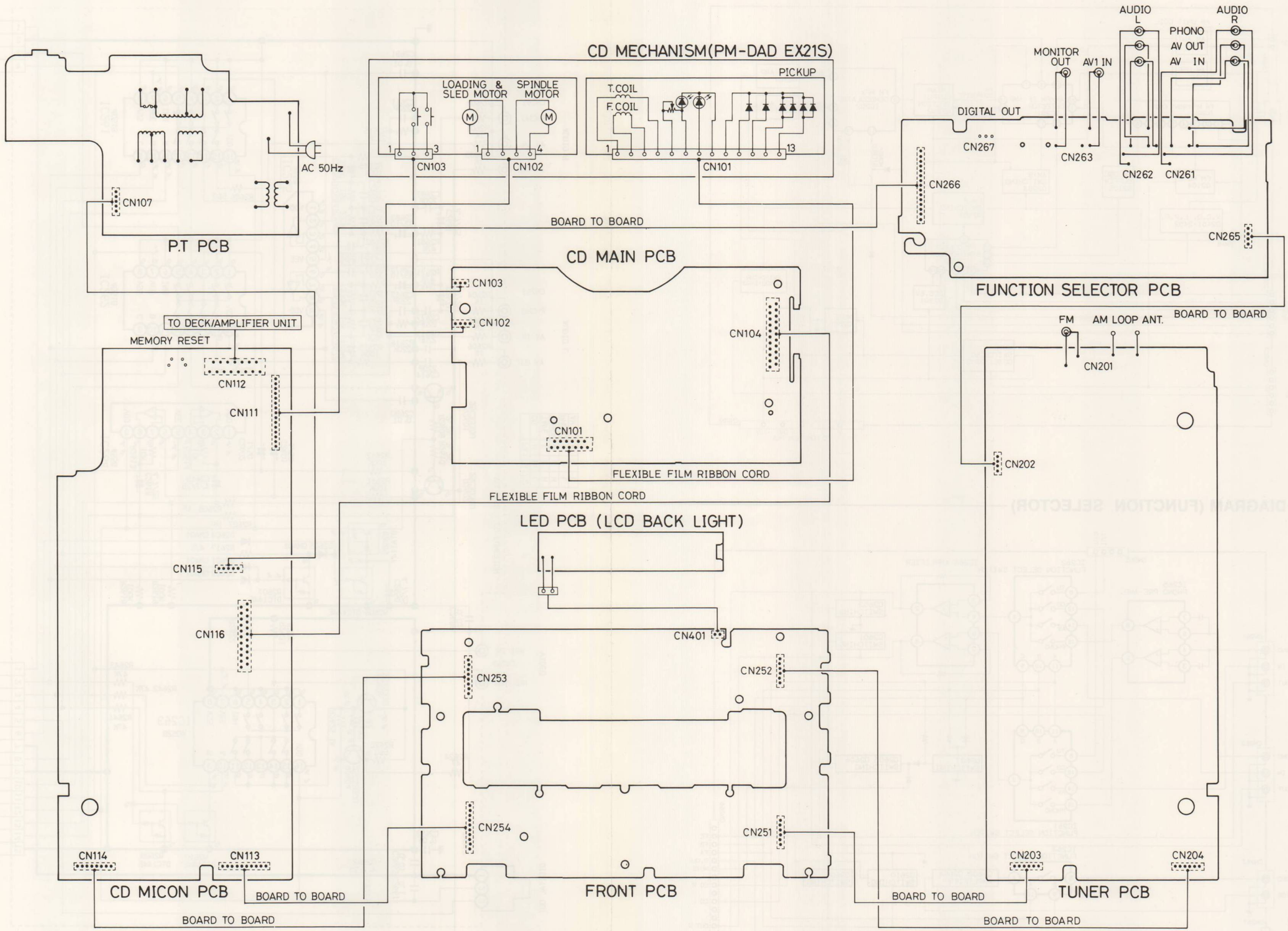

VOLTAGES OF IC (CD)

(Unit : Volt)

IC101 LA9210M

Measuring Pin No.	1	2	3	4	5	6	7	8	9	10	11	12	13	14	15	16
Stop Mode	0	-5.0	0	0	0	0	0	0	0	2.59	2.54	2.55	0	0	0	0
Play Mode	0	-5.0	Fluc	Fluc	Fluc	Fluc	Fluc	0	0	Fluc	Fluc	Fluc	Fluc	Fluc	Fluc	Fluc
Measuring Pin No.	17	18	19	20	21	22	23	24	25	26	27	28	29	30	31	32
Stop Mode	0	0	0	0	Fluc	Fluc	0	0	0	0	Fluc	2.43	0	0	0	-5.0
Play Mode	Fluc	Fluc	Fluc	Fluc	Fluc	Fluc	Fluc	Fluc	0	Fluc	Fluc	Fluc	Fluc	Fluc	Fluc	-5.0
Measuring Pin No.	33	34	35	36	37	38	39	40	41	42	43	44	45	46	47	48
Stop Mode	0	0	0	5.0	4.39	0	0	0	0	0	0	0	4.97	4.92	4.07	4.07
Play Mode	Fluc	Fluc	Fluc	5.0	Fluc	Fluc	Fluc	Fluc	0	Fluc	Fluc	Fluc	Fluc	Fluc	Fluc	Fluc
Measuring Pin No.	49	50	51	52	53	54	55	56	57	58	59	60	61	62	63	64
Stop Mode	4.07	0	0	0	2.52	2.49	2.50	5.0	2.51	2.51	2.54	3.92	2.60	2.33	4.92	0
Play Mode	Fluc	Fluc	Fluc	Fluc	Fluc	Fluc	Fluc	5.0	Fluc	Fluc	Fluc	Fluc	Fluc	Fluc	Fluc	0
Measuring Pin No.	65	66	67	68	69	70	71	72	73	74	75	76	77	78	79	80
Stop Mode	0	0.4	-0.4	0	-0.5	-0.5	0	-0.5	0	4.82	-4.97	4.83	5.0	0	0	0
Play Mode	0	Fluc	Fluc	Fluc	Fluc	Fluc	0	Fluc	Fluc	Fluc	Fluc	Fluc	5.0	Fluc	Fluc	0

IC102 LA6524

Measuring Pin No.	1	2	3	4	5	6	7	8	9	10
Play Mode	Fluc	Fluc	-11	Fluc	Fluc	Fluc	Fluc	10	Fluc	8.60

Fluc : Fluctuation

IC104 LC7866E

Measuring Pin No.	1	2	3	4	5	6	7	8	9	10	11	12	13	14	15	16
Stop Mode	0	2.31	2.34	2.51	0	2.46	2.48	2.52	0	0	0	4.92	0	2.51	4.07	4.07
Play Mode	Fluc	Fluc	Fluc	Fluc	0	Fluc	Fluc	Fluc	Fluc	Fluc	Fluc	Fluc	Fluc	Fluc	Fluc	Fluc
Measuring Pin No.	17	18	19	20	21	22	23	24	25	26	27	28	29	30	31	32
Stop Mode	4.07	2.5	0	4.95	4.97	0	0	5.0	0	0	0	0	0	5.0	1.25	1.25
Play Mode	Fluc	Fluc	Fluc	Fluc	Fluc	Fluc	Fluc	5.0	Fluc	Fluc	Fluc	Fluc	Fluc	5.0	Fluc	Fluc
Measuring Pin No.	33	34	35	36	37	38	39	40	41	42	43	44	45	46	47	48
Stop Mode	2.5	2.5	0	2.5	0	2.5	2.41	1.63	2.5	4.5	2.52	Fluc	2.28	0	2.5	0
Play Mode	Fluc	Fluc	Fluc	Fluc	Fluc	Fluc	Fluc	Fluc	0(4.5)	Fluc	Fluc	Fluc	Fluc	Fluc	Fluc	Fluc
Measuring Pin No.	49	50	51	52	53	54	55	56	57	58	59	60	61	62	63	64
Stop Mode	2.5	Fluc	Fluc	Fluc	0	5.0	4.48	0	4.92	Fluc	2.33	4.93	0	0	2.28	2.47
Play Mode	Fluc	Fluc	Fluc	Fluc	0	5.0	Fluc	0	Fluc	Fluc	Fluc	Fluc	Fluc	0	Fluc	Fluc

IC105 SM5870DS

Measuring Pin No.	1	2	3	4	5	6	7	8	9	10	11	12	13	14	15	16
Play Mode	3.0	0	0	0	5.0	5.0	5.0	2.5	2.4	1.6	5.0	0	0	4.8	0	5.0
Measuring Pin No.	17	18	19	20	21	22	23	24	25	26	27	28				
Play Mode	5.0	2.4	0	2.4	5.0	5.0	2.4	0	2.4	5.0	5.0	1.3				

IC106 XRA15218F

Measuring Pin No.	1	2	3	4	5	6	7	8
Play Mode	Fluc	1.3	1.3	-5.0	1.3	1.3	Fluc	5.0

IC131 μPD75116

Measuring Pin No.	1	2	3	4	5	6	7	8	9	10	11	12	13	14	15	16
Stop Mode	0			(0)	(0)	(0)										(0)
Play Mode	4.8	5.0	0	(5.0)	(5.0)	(5.0)	5.0	2.5	2.5	4.7	5.0	5.0	0	0	0	(4.8)
Measuring Pin No.	17	18	19	20	21	22	23	24	25	26	27	28	29	30	31	32
Stop Mode							(0)	0								
Play Mode	0	0	0	0	0	5.0	(5.0)	Fluc	2.5	0	4.7	4.8	0	5.0	5.0	5.0
Measuring Pin No.	33	34	35	36	37	38	39	40	41	42	43	44	45	46	47	48
Stop Mode					(0)		(5.0)					0				
Play Mode	5.0	5.0	0	0	(5.0)	0	(0)	0	0	0	5.0	4.0	5.0	5.0	0	0
Measuring Pin No.	49	50	51	52	53	54	55	56	57	58	59	60	61	62	63	64
Stop Mode													(0)			0
Play Mode	0	0	0	0	0	5.0	0	0	5.0	5.0	5.0	5.0	(5.0)	0	5.0	5.0

NOTES :

PIN 4 : Stop Mode = OTHER
Play Mode = TAPE & TUNER

PIN 5 : Stop Mode = OTHER
Play Mode = CD & PHONO

PIN 6 : Stop Mode = OTHER
Play Mode = TUNER, AV & CD

PIN 16 : Stop Mode = OTHER
Play Mode = WAIT THE SYNCRO

PIN 23 : Stop Mode = ON THE DISC
Play Mode = ON THE NO DISC

PIN 37 : Stop Mode = OTHER
Play Mode = CLOSING THE TRAY

PIN 39 : Stop Mode = OTHER
Play Mode = OPENING THE TRAY

PIN 62 : Stop Mode = EMPHASIS ON
Play Mode = EMPHASIS OFF

VOLTAGES OF IC & TRANSISTOR (CD)

IC132 LA6510

Measuring Pin No.	1	2	3	4	5	6	7	8	9	10
Play Mode	10	-5	-5	0	0	-11	5	5	5.5	5

IC133 L78M12ML

Measuring Pin No.	1	2	3
Play Mode	19	0	12

TRANSISTOR

(Unit : Volt)

Transistor No.	Q101			Q102			Q103			Q1301		
Measuring Pin Name	E	C	B	E	C	B	E	C	B	E	C	B
Stop Mode	5.0	0	4.7	2.0	2.5	2.5	0	0	0.6			
Play Mode	3.6	1.8	3.0				0	4.9	0	5.0	5.0	0
Transistor No.	Q1302			Q1303			Q1304			Q1305		
Measuring Pin Name	E	C	B	E	C	B	E	C	B	E	C	B
Stop Mode				4.8	4.8	0	0	(0)	(5.0)			
Play Mode	0	5.0	0	0	-5.0	0	0	(1.9)	(0)	4.7	4.6	4.0
Transistor No.	Q1500			Q1501			Q1601			Q1604		
Measuring Pin Name	E	C	B	E	C	B	E	C	B	E	C	B
Stop Mode	0	0	0.6	0	0	0.6						
Play Mode	0	0	-5.0	0	0	-5.0	5.7	12.1	6.4	12.0	11.9	11.3
Transistor No.	Q1605											
Measuring Pin Name	E	C	B									
Stop Mode	0	(0)	(5)									
Play Mode	0	(12.0)	(0)									

NOTES :

Q1304 : Stop Mode = POWER ON
Play Mode = POWER OFF

Q1605 : Stop Mode = POWER ON
Play Mode = POWER OFF

TOOL FOR REPAIRABLE (CD / TUNER UNIT)

Please use the tools (PCB relay cord) for repairable

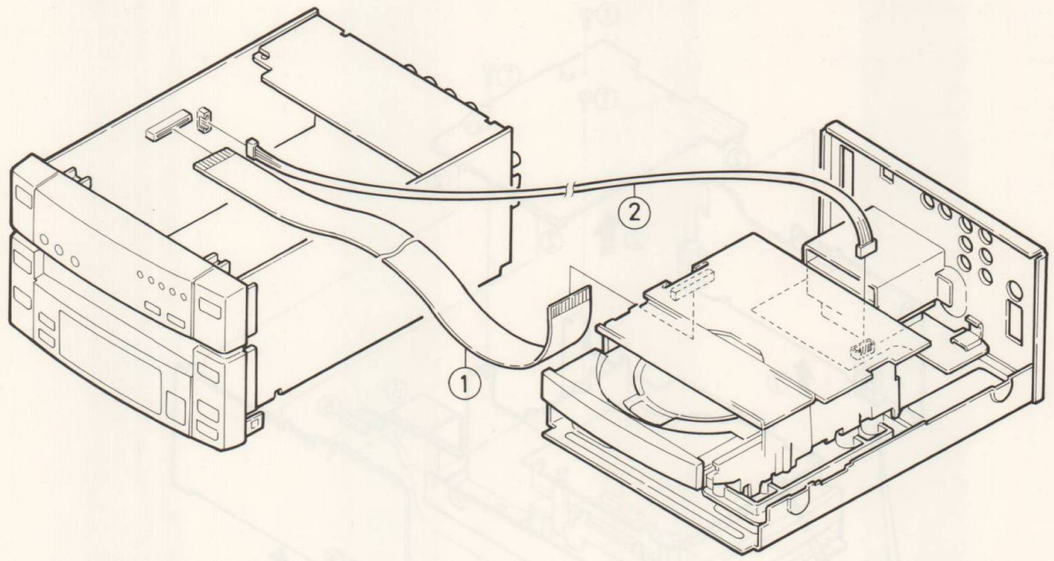

NO.	POS NO.	PARTS CODE
①	Z901	4822 321 61777
②	Z902	4822 321 61778

TAPE DECK / PRE-AMPLIFIER UNIT

DISASSEMBLY

1. CABINET, FRONT & REAR PANEL

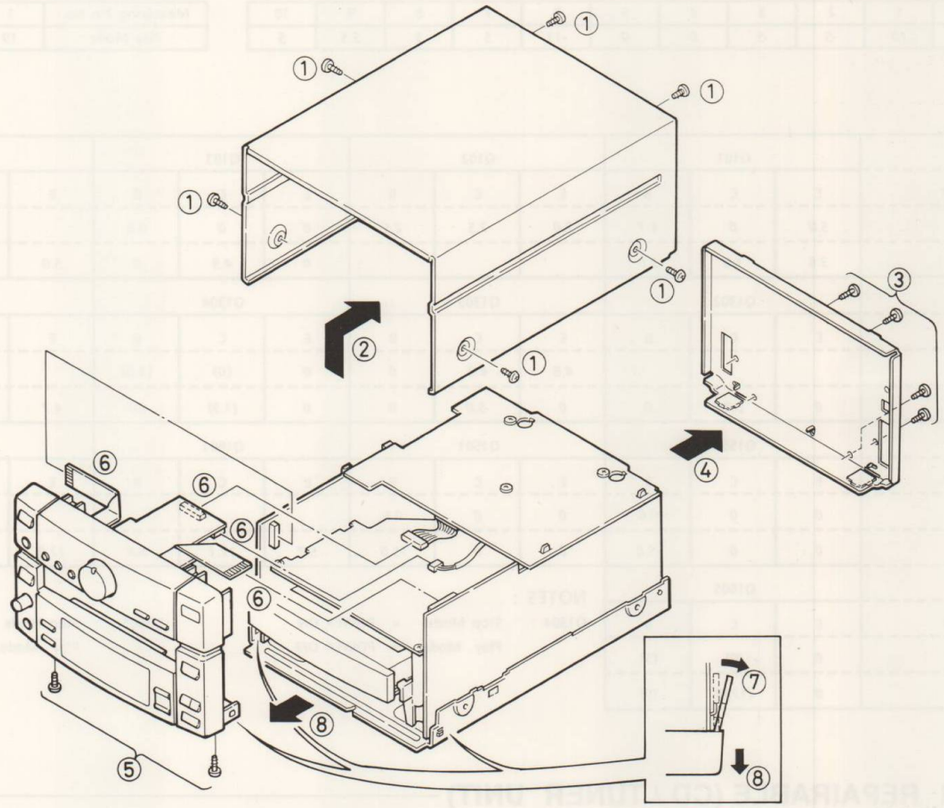

2. P. C. BOARD

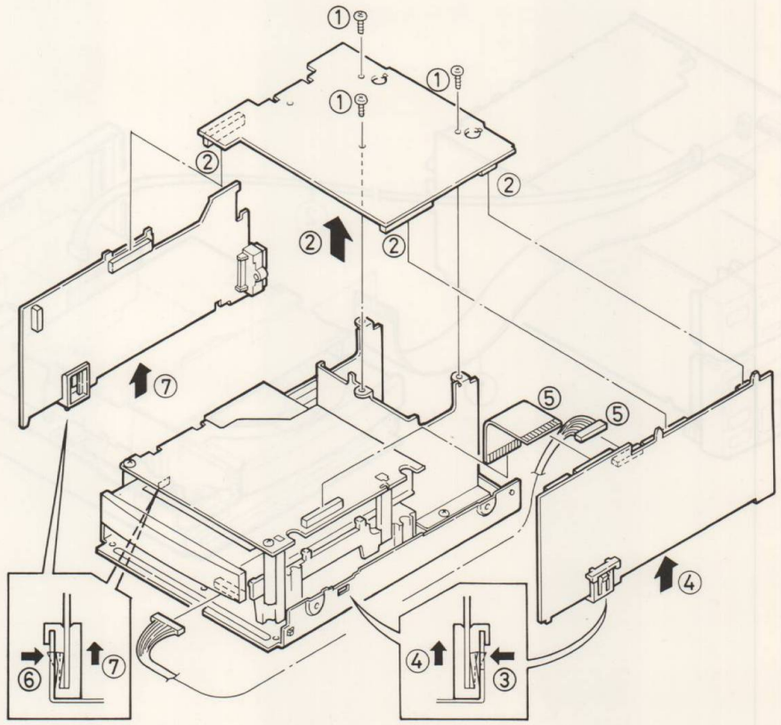

DISASSEMBLY

3. TAPE DECK MECHANISM

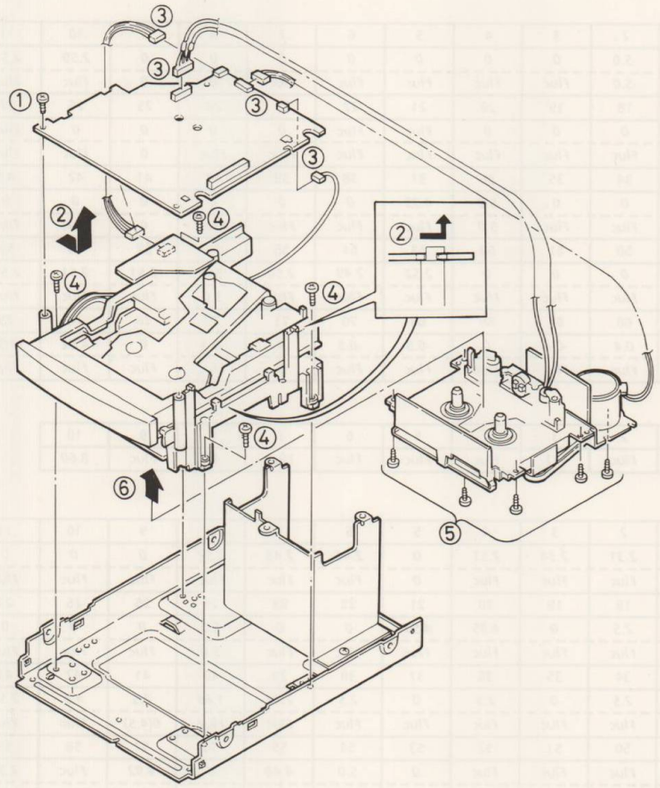

4. P. C. BOARD LAYOUT

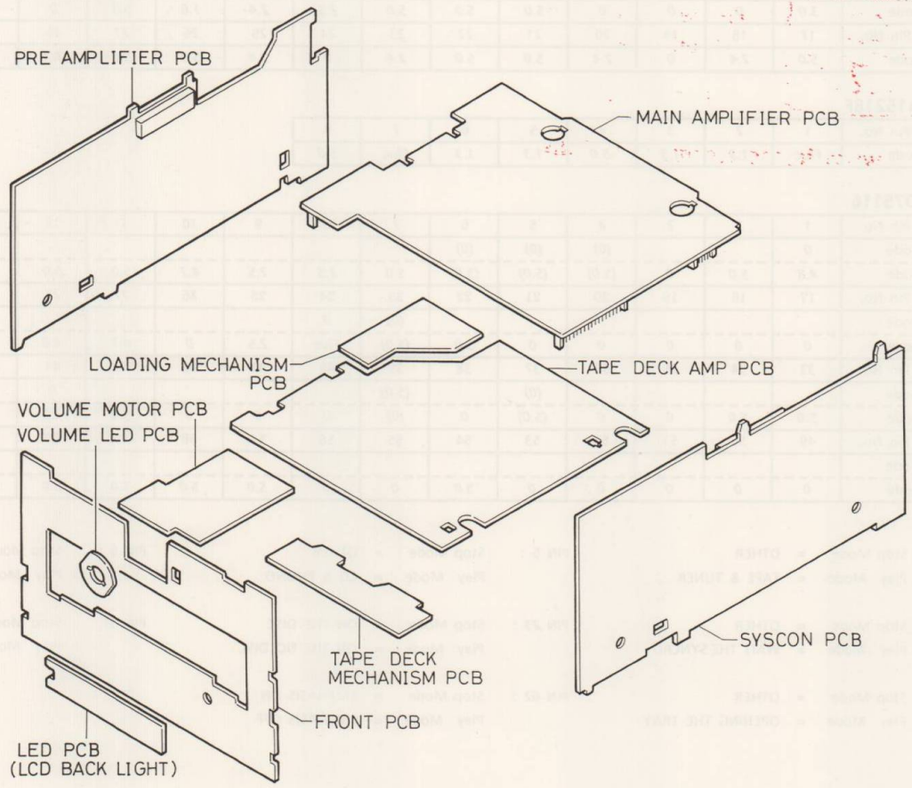

DISASSEMBLY

5. Front P.C.Board Fixing

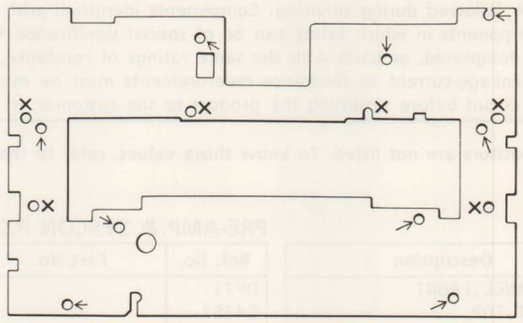

ADJUSTMENT (TAPE DECK)

1 Tape Deck Amplifier Adjustment

	ITEM	TEST TAPE	INPUT	DOLBY	OUTPUT	ADJUST POINT	REMARKS
1	HEAD AZIMUTH	MTT-114N	-----	OFF	TP OUT CN307	Azimuth Screw	Adjust screw so that 10kHz output become maximum. (Both Forward & Reverse)
2	TEPE SPEED	MTT-111N	-----	OFF	TP OUT CN307	SVR39	Adjust SVR so that Playback output become 3000Hz. (Near tape end)
3	PLAYBACK LEVEL	TCC-130	-----	OFF	TP OUT CN307	SVR31 (L-ch) SVR32 (R-ch)	Adjust SVR so that TEST POINT OUT output become 0.58V.
4	BIAS OSC	AC-224	105kHz	OFF	TP OSC CN306	L3601	Beat Cancel SW1 : Adjust 105 kHz Beat Cancel SW2 : Confirm 102 ± 2kHz
5	19KHZ FILTER	AC-224	19kHz ± 10Hz (-8dB)	OFF	TP OUT CN307	L3501 (L-ch) L3551 (R-ch)	Set frequency 400Hz output to 0dB. Adjust Coil so that 19kHz output become -30dB.
6-1	REC/PLAY FREQUENCY	AC-224 (NORMAL)	1kHz (-28dB) 10kHZ (-28dB)	ON	TP OUT CN307	SVR35 (L-ch) SVR36 (R-ch)	Set frequency 1kHz output to 0dB. Adjust SVR so that 10kHz output become +0dB.
6-2	REC/PLAY FREQUENCY	AC-513 (CRO2)	1kHz (-28dB) 10kHZ (-28dB)	OFF	TP OUT CN307	SVR37	Set frequency 1kHz output to 0dB. Adjust SVR so that 10kHz output become +0dB.
6-3	REC/PLAY FREQUENCY	AC-712 (METAL)	1kHz (-28dB) 10kHZ (-28dB)	OFF	TP OUT CN307	SVR38	Set frequency 1kHz output to 0dB. Adjust SVR so that 10kHz output become +0dB.
7	REC/PLAY LEVEL	AC-224	1kHz (-8dB)	OFF	TP OUT CN307	SVR33 (L-ch) SVR34 (R-ch)	Adjust to obtain same output of 1kHz and 10kHz.

Note. 1. Head azimuth : Be sure both channels (L and R) are the same level and phase.
2. During adjustment measurement Beat cancel SW is at 1 condition fundamentally, confirm R/P frequency characteristic dolby effect also by 2 condition.

2 Parts Location

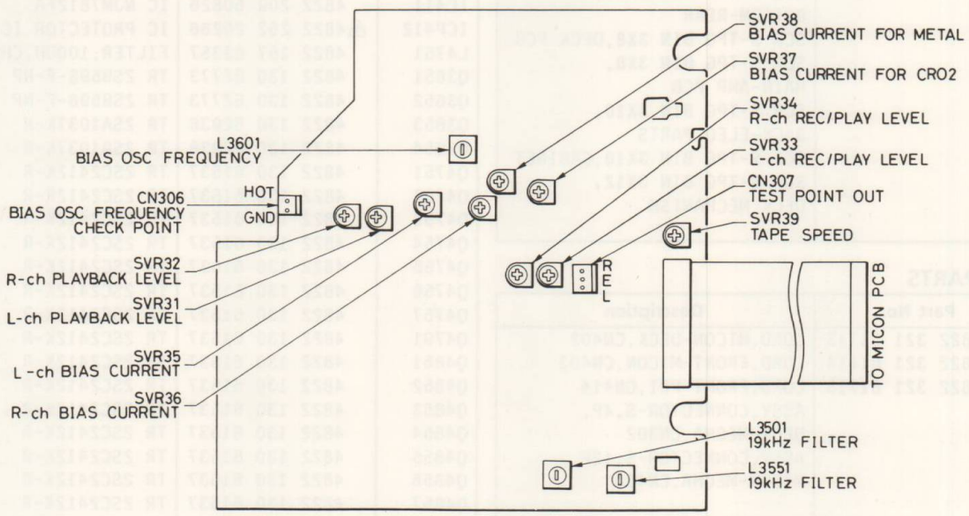

ADJUSTMENT & TORQUE (TAPE DECK)

3 Head Azimuth Adjustment

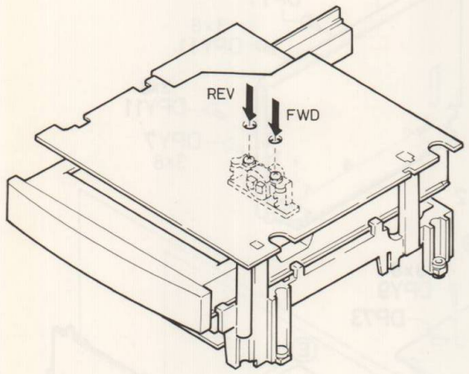

4 Head Replacement

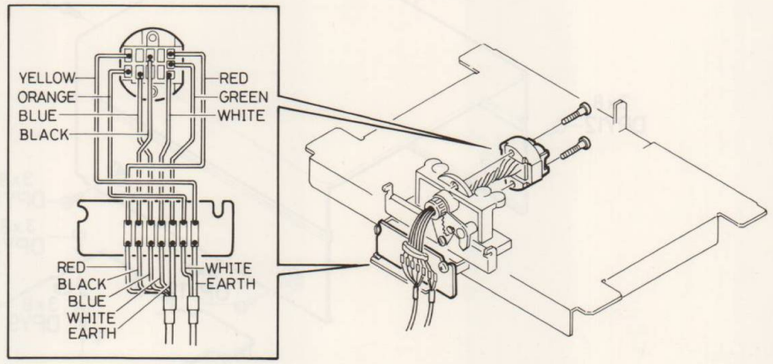

5 Belt & Motor Replacement

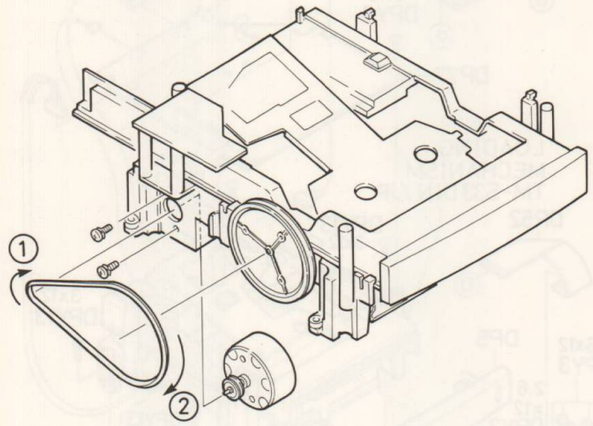

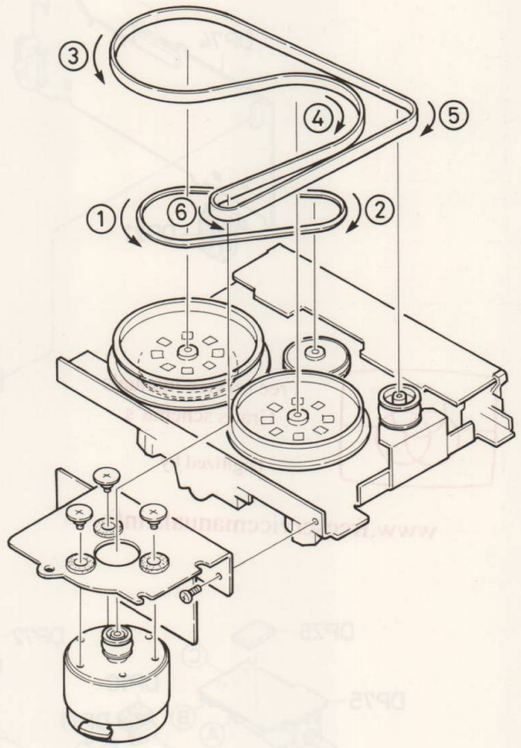

6 Checking the mechanism torques

Note : Clean the head, capstan and pinch roller before making any measurement.

ITEM	TAKE-UP TORQUE	BACK TENSION	TAPE TENSION
Test cassette	PLAY (FWD) : TW2111A PLAY (REW) : TW2121A F.FWD/REW : TW2231	PLAY (FWD) : TW2111A PLAY (REW) : TW2121A	Driving power cassette : PLAY (FWD) : TW-2412 PLAY (REW) : TW2422
PLAY	30~60gr.cm	2.0~5.0gr.cm	more than 80gr
F.FWD	70~140gr.cm	------	------
REW	70~140gr.cm	------	------

EXPLODED VIEW (TAPE DECK / PRE-AMPLIFIER UNIT)

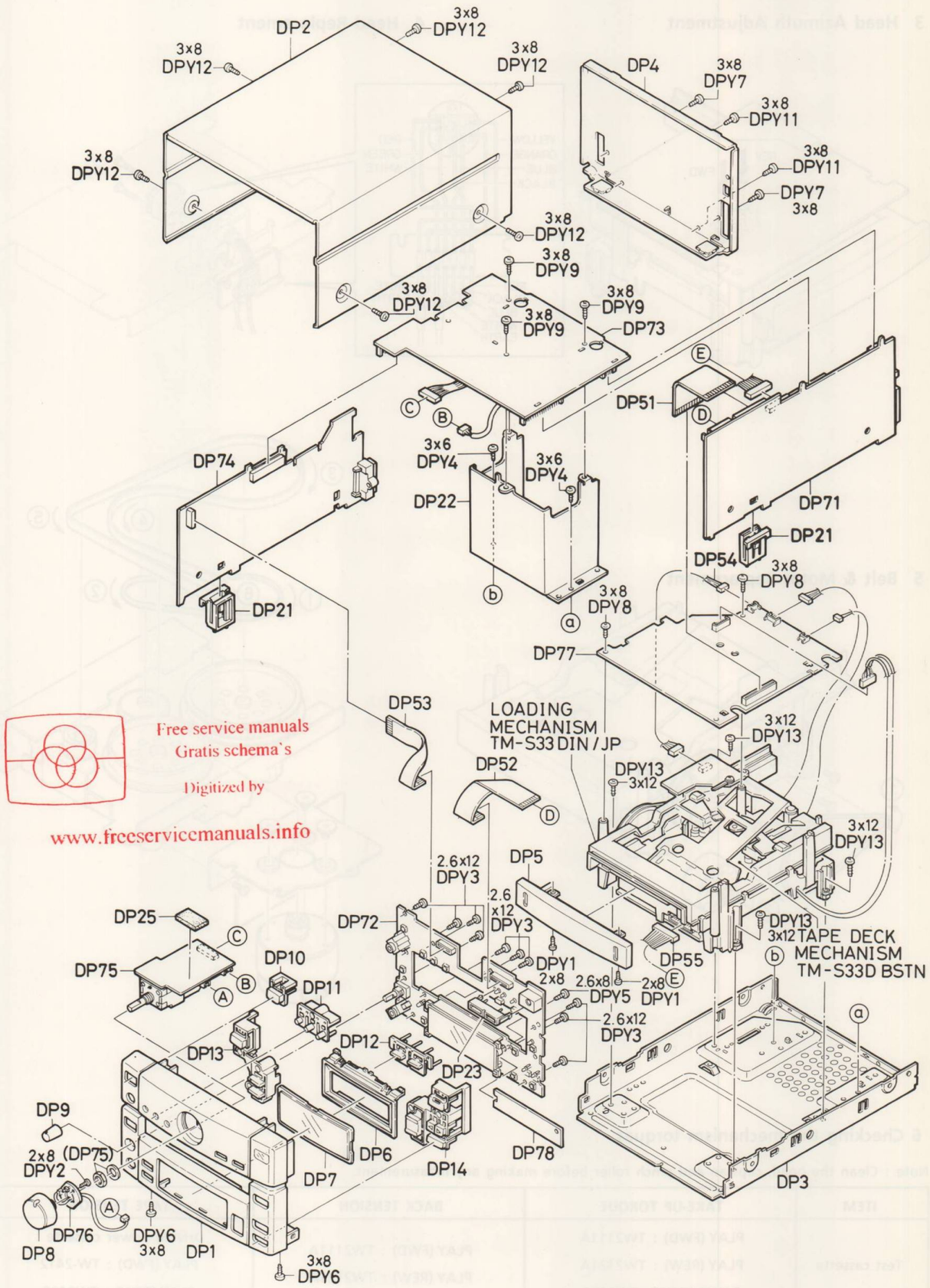

PARTS LIST (TAPE DECK / PRE-AMPLIFIER UNIT)

PRODUCT SAFETY NOTICE

Each precaution in this manual should be followed during servicing. Components identified with the IEC symbol ⚠ in the parts list and the schematic diagram designate components in which safety can be of special significance. When replacing a component identified ⚠, use only the replacement parts designated, or parts with the same ratings of resistance, wattage or voltage that are designated in the parts list in this manual. Leakage-current or resistance measurements must be made to determine that exposed parts are acceptably insulated from the supply circuit before returning the product to the customer.

CAUTION: Regular type resistors and capacitors are not listed. To know those values, refer to the schematic diagram.

CABINET

Ref. No.	Part No.	Description
DP1	4822 426 51593	ASSY,PANEL,FRONT
DP2		CABINET,TOP
DP3	4822 425 40192	CABINET,BOTTOM
DP4		ASSY,PANEL,REAR
DP5	4822 454 30472	ESCUTCHEON,DECK TRAY
DP6	4822 454 30467	ESCUTCHEON,LCD WINDOW
DP7	4822 450 61953	WINDOW,LCD
DP8	4822 413 41739	KNOB,ROTARY,MAIN VOL
DP9	4822 413 41741	KNOB,ROTARY,MIC VOL
DP10	4822 410 62192	BUTTON,DISPLAY
DP11	4822 410 62186	BUTTON,SOUND STYLE
DP12	4822 417 11176	ASSY,HINGE,D'BASS SURROUND
DP13	4822 410 62191	ASSY,BUTTON,DOLBY
DP14	4822 410 62189	ASSY,BUTTON,OPEN/CLOSE

CHASSIS

Ref. No.	Part No.	Description
DP21		MOUNT-E,SIDE PCB FIX
DP22		BRACKET-E,MAIN-AMP PCB FIX
DP23		REFLECTOR,LED
DP24	4822 532 12197	WASHER,SPECIAL,FIBER,PCB
DP25		CUSHION,VOL LEAD WIRE

FIXING PARTS

Ref. No.	Part No.	Description
DPY1		SCR S-TPG BIN 2X8,DECK TRAY
DPY2		SCR S-TPG BIN 2X8,MAIN VOL
DPY3		SCR S-TPG BIN 2.6X12, FRONT PCB
DPY4		SCR S-TPG BIN 3X6, BRACKET-E+BOTTOM
DPY5		SCR S-TPG BIN 2.6X8,LED
DPY6		SCR S-TPG BIN 3X8, FRONT+BOTTOM
DPY7		SCR S-TPG BIN 3X10, BOTTOM-REAR
DPY8		SCR S-TPG BIN 3X8,DECK PCB
DPY9		SCR S-TPG BIN 3X8, MAIN-AMP PCB
DPY11		SCR S-TPG BIN 3X10, BACK-ELEC.PARTS
DPY12		SCR S-TPG BIN 3X10,CABINET
DPY13		SCR S-TPG BIN 3X12, DECK MECHANISM

ELECTRICAL PARTS

Ref. No.	Part No.	Description
DP51	4822 321 61713	CORD,MICON-DECK,CN402
DP52	4822 321 61714	CORD,FRONT-MICON,CN403
DP53	4822 321 61715	CORD,FRONT-PRI,CN414
DP54		ASSY,CONNECTOR-S,4P, DECK-MECHA,CN302
DP55		ASSY,CONNECTOR-S,12P, MICON-MECHA,CN404

PRE-AMP & SYSCON P.C.BOARD ASSY

Ref. No.	Part No.	Description
DP71		ASSY,PCB,MICON
C4752		MT-POLYEST 0.082U J 63V
C4852		MT-POLYEST 0.082U J 63V
CN401	4822 290 61038	SOCKET,15P,CD/TUNER - DECK/PRE-AMP UNIT
CN402	4822 265 51341	SOCKET,26P,MICOM-DECK
CN403	4822 267 51168	SOCKET,16P,MICOM-FRONT
CN404		PLUG,12P,TO TAPE MECHANISM
CN405	4822 267 31548	SOCKET,20P,MICOM-POWER 1
CN406	4822 267 31549	SOCKET,5P,MICOM-POWER 2
CN408		PLUG,2P,START POINT
D4677	4822 130 83133	ZENER DIODE GZA5.1X
D4678	4822 130 83131	ZENER DIODE GZA4.7Y
D4687	4822 130 83131	ZENER DIODE GZA4.7Y
D4688	4822 130 83133	ZENER DIODE GZA5.1X
D4751	4822 130 83132	ZENER DIODE GZA6.8Z
D4752	4822 130 83132	ZENER DIODE GZA6.8Z
D4753	4822 130 83133	ZENER DIODE GZA5.1X
D4754	4822 130 83133	ZENER DIODE GZA5.1X
D4758	4822 130 82634	DIODE DS442X
D4759	4822 130 82634	DIODE DS442X
D4760	4822 130 80522	DIODE DAP202K
D4761	4822 130 80522	DIODE DAP202K
D4762	4822 130 82634	DIODE DS442X
D4763	4822 130 82634	DIODE DS442X
D4764	4822 130 33076	ZENER DIODE GZA5.6Y
D4765	4822 130 82634	DIODE DS442X
D4766	4822 130 32508	DIODE DSF10C
D4777	4822 130 83255	ZENER DIODE GZA5.6X
IC401	4822 209 62604	IC MC14052BF
IC402	4822 209 71451	IC NJM4558M-S
or	4822 209 71451	IC RC4558M-S
IC403	4822 209 71451	IC NJM4558M-S
or	4822 209 71451	IC RC4558M-S
IC404	4822 209 71783	IC LC7522
IC405	4822 209 31502	IC BA3826S
IC406	4822 209 71373	IC RC78L05A
or	4822 209 71373	IC NJM78L05A
IC408	4822 209 31688	IC UPD75512GF-144-3B9
IC411	4822 209 60826	IC NJM7812FA
ICP412	⚠4822 252 20266	IC PROTECTOR ICP-N25
L4751	4822 157 63357	FILTER,100UH,CHOCK
Q3651	4822 130 62773	TR 2SB598-F-NP
Q3652	4822 130 62773	TR 2SB598-F-NP
Q3653	4822 130 62938	TR 2SA1037K-R
Q3654	4822 130 62938	TR 2SA1037K-R
Q4751	4822 130 61537	TR 2SC2412K-R
Q4752	4822 130 61537	TR 2SC2412K-R
Q4753	4822 130 61537	TR 2SC2412K-R
Q4754	4822 130 61537	TR 2SC2412K-R
Q4755	4822 130 61537	TR 2SC2412K-R
Q4756	4822 130 61537	TR 2SC2412K-R
Q4757	4822 130 61537	TR 2SC2412K-R
Q4791	4822 130 61537	TR 2SC2412K-R
Q4851	4822 130 61537	TR 2SC2412K-R
Q4852	4822 130 61537	TR 2SC2412K-R
Q4853	4822 130 61537	TR 2SC2412K-R
Q4854	4822 130 61537	TR 2SC2412K-R
Q4855	4822 130 61537	TR 2SC2412K-R
Q4856	4822 130 61537	TR 2SC2412K-R
Q4857	4822 130 61537	TR 2SC2412K-R

Ref. No.	Part No.	Description
R4658	⚠4822 116 60314	FUSIBLE RES 10 J- 1/4W
RA451	4822 111 91513	RESISTOR,100K OHM X8
or	4822 111 91513	RESISTOR,100K OHM X8
RA452	4822 111 91513	RESISTOR,100K OHM X8
or	4822 111 91513	RESISTOR,100K OHM X8
RA454	4822 111 92109	RESISTOR,100K OHM X10
or	4822 111 92109	RESISTOR,100K OHM X10
RA455	4822 111 92116	RESISTOR,4.7K OHM X6
or	4822 111 92116	RESISTOR,4.7K OHM X6
RA456	4822 111 92111	RESISTOR,4.7K OHM X3
or	4822 111 92111	RESISTOR,4.7K OHM X3
S461	4822 276 13304	SWITCH,TACT,MEMORY RESET
S3601	4822 277 21543	SWITCH,BEAT CANCEL
X4051	4822 242 81288	RESONATOR,CERAMIC,4.19MHZ

FRONT P.C.BOARD ASSY

Ref. No.	Part No.	Description
DP72		ASSY,PCB,FRONT
	4822 130 91167	LCD(LIQUID CRYSTAL DISPLAY)
		REFLECTOR,LCD
		SHEET,LCD
CN403		SOCKET,16P,FFC,TO MICON PCB
CN414		SOCKET,11P,FFC,TO PRI PCB
CN427	4822 267 31528	JACK,MIC SOCKET,GOLD
CN428	4822 267 31528	JACK,HPONES SOCKET,GOLD
D4605	4822 130 80522	DIODE DAP202K
D4914	4822 130 83138	LED SLR-40MC3F-P,D'BASS
or	4822 130 83138	LED SLR-40MC3F-Q,D'BASS
D4915	4822 130 83138	LED SLR-40MC3F-P,D'BASS
or	4822 130 83138	LED SLR-40MC3F-Q,D'BASS
D4916	4822 130 83137	LED SLR-40VC3F-N,SURR.
or	4822 130 83137	LED SLR-40VC3F-P,SURR.
D4917	4822 130 83137	LED SLR-40VC3F-N,SURR.
or	4822 130 83137	LED SLR-40VC3F-P,SURR.
D4918	4822 130 83137	LED SLR-40VC70F095-P, OPEN/CLOSE
or	4822 130 83137	LED SLR-40VC70F095, OPEN/CLOSE
D4919	4822 130 83162	LED SLR-34VC3F-M-C, REC/PAUSE
or	4822 130 83162	LED SLR-34VC3F-N-C, REC/PAUSE
D4920	4822 130 83163	LED SLR-34MC3F-P-C,FWD PLAY
or	4822 130 83163	LED SLR-34MC3F-Q-C,FWD PLAY
D4921	4822 130 83163	LED SLR-34MC3F-P-C,REV PLAY
or	4822 130 83163	LED SLR-34MC3F-Q-C,REV PLAY
IC472	4822 209 31683	IC LC7582
IC473	4822 209 71451	IC NJM4558M-S
or	4822 209 71451	IC RC4558M-S
S4600	4822 276 13303	SWITCH,TACT,OPEN/CLOSE
S4601	4822 276 13303	SWITCH,TACT,AMSS/GEQ UP
S4602	4822 276 13306	SWITCH,TACT,FWD PLAY
S4603	4822 276 13303	SWITCH,TACT,STOP
S4604	4822 276 13306	SWITCH,TACT,REV PLAY
S4605	4822 276 13303	SWITCH,TACT,AMSS/GEQ DOWN
S4606	4822 276 13303	SWITCH,TACT,REC/PAUSE
S4607	4822 276 13303	SWITCH,TACT,REV.MODE
S4608	4822 276 13303	SWITCH,TACT,DOLBY
S4609	4822 276 13303	SWITCH,TACT,SOUND STYLE
S4610	4822 276 13303	SWITCH,TACT,PRESET
S4611	4822 276 13303	SWITCH,TACT,FREQ/MEMO
S4612	4822 276 13306	SWITCH,TACT,D'BASS
S4613	4822 276 13306	SWITCH,TACT,SURR.
S4614	4822 276 13303	SWITCH,TACT,DISPLAY
S4900	4822 130 83141	OPTO CONNECTOR,IR
VR401	4822 100 11892	VR,ROTARY,MIC VOL

MAIN-AMPLIFIER P.C.BOARD ASSY

Ref. No.	Part No.	Description
DP73		ASSY,PCB,POWER AMP
		ASSY,CONNECTOR-S,3P,L/E/R
C4655		NP-ELECT 10U M 16V
C4656		NP-ELECT 10U M 16V
CN405		PLUG,20P,TO MICOM PCB
CN406		PLUG,5P,TO MICOM PCB
CN410		PLUG,18P,TO PRI PCB 1
CN413		ASSY,CONNECTOR-S,9P, TO VOL PCB
CN426		SOCKET,3P,L/E/R IN
D4660	4822 130 82633	DIODE GMA01
D4661	4822 130 82633	DIODE GMA01
D4662	4822 130 82633	DIODE GMA01
D4663	4822 130 82634	DIODE DS442X
D4665	4822 130 83256	ZENER DIODE MTZ3.9A
D4666	4822 130 83256	ZENER DIODE MTZ3.9A
D4667	4822 130 82666	ZENER DIODE MTZ4.7B
IC470	4822 209 31616	IC LA6458D
IC474	4822 209 32016	IC NJM2068S
ICP492	⚠4822 209 61685	IC PROTECTOR ICP-N38
Q4604	4822 130 42682	TR DTA144ES
Q4720	4822 130 60945	TR 2SC3330-U
Q4721	4822 130 42715	TR 2SA608-G-SPA
Q4722	4822 130 60945	TR 2SC3330-U
Q4723	4822 130 60945	TR 2SC3330-U
Q4820	4822 130 60945	TR 2SC3330-U
Q4821	4822 130 42715	TR 2SA608-G-SPA
Q4822	4822 130 60945	TR 2SC3330-U
Q4823	4822 130 60945	TR 2SC3330-U

PRE-AMPLIFIER. P.C.BOARD ASSY

Ref. No.	Part No.	Description
DP74		ASSY,PCB,PRE-AMP
CN410	4822 267 51178	SOCKET,18P,BOARD TO BOARD, PRI-MAIN PCB
CN414	4822 267 51169	SOCKET,11P,FFC,TO FRONT PCB
CN417	4822 267 51177	SOCKET,13P,POWER AMP UNIT
D4663	4822 130 80132	ZENER DIODE MTZ3.9X
IC471	4822 209 31616	IC LA6458D
Q4171	4822 130 60945	TR 2SC3330-U
Q4181	4822 130 60945	TR 2SC3330-U

MOTOR VOLUME P.C.BOARD ASSY

Ref. No.	Part No.	Description
DP75		ASSY,PCB,MOTOR VOL
C4713		POLYESTER 0.056U J 50V
C4813		POLYESTER 0.056U J 50V
C4914		POLYESTER 0.01U J 50V
C4915	4822 124 21903	NP-ELECT 1U M 50V
CN411		PLUG,3P,TO MAIN AMP
CN413		PLUG,9P,TO MAIN AMP
CN415		PLUG,2P,TO VOL LED PCB
D4913	4822 130 82667	ZENER DIODE MTZ5.1C
IC491	4822 209 30193	IC LB1641
R4913	⚠4822 116 60314	FUSIBLE RES 10 J- 1/4W
VR400	4822 100 11914	VR,ROTARY,MAIN VOL

VOLUME LED P.C.BOARD ASSY

Ref. No.	Part No.	Description
DP76		ASSY,PCB,VOL LED
		ASSY,CONNECTOR-S,2P, TO MOTOR VOL PCB
D4923	4822 130 82678	LED SLP-190B-14-AB-T1,VOL

TAPE DECK AMPLIFIER P.C.BOARD ASSY

Ref. No.	Part No.	Description
DP77		ASSY,PCB,DECK MAIN
C3608		POLYPRO 8200P J 100V
C3688		POLYPRO 680P J 100V

Ref. No.	Part No.	Description
C3699		NP-ELECT 1U M 50V
CN301	4822 265 51341	SOCKET,26P,MICOM-DECK
CN302		PLUG,4P,LOADING SWITCH
CN303		PLUG,4P,LOADING MOTOR
CN304		PLUG,4P,TAPE MOTOR
CN305		PLUG,7P,R/P & E.HEAD
CN306		PLUG,2P,TEST POINT, FOR E HEAD
CN307		PLUG,3P,TEST POINT, FOR SIGNAL
D3651	4822 130 83143	ZENER DIODE MTZ10B
D3652	4822 130 83142	ZENER DIODE MTZ6.2A
D3653	4822 130 82666	ZENER DIODE MTZ4.7B
D3654	4822 130 81636	ZENER DIODE MTZ15A
D3901	4822 130 83143	ZENER DIODE MTZ11A
D3902	4822 130 82664	ZENER DIODE MTZ5.6C
IC361	4822 209 30193	IC LB1641
ICP362	⚠4822 209 30186	IC PROTECTOR ICP-N15
ICP363	⚠4822 209 30186	IC PROTECTOR ICP-N15
IC371	4822 209 31692	IC M51167BFP
IC372	4822 209 31846	IC HA12142NT
IC373	4822 209 30188	IC BA3126N
L3501	4822 157 63377	FILTER,LC,MPX
L3551	4822 157 63377	FILTER,LC,MPX
L3601	4822 156 21673	TRANS,OSC,OSC
L3701	4822 153 70054	FILTER,REC PEAK
L3702	4822 242 80323	MX COIL,TRAP
L3703	4822 153 70055	FILTER,3.3MH
L3801	4822 153 70054	FILTER,REC PEAK
L3802	4822 242 80323	MX COIL,TRAP
L3803	4822 153 70055	FILTER,3.3MH
Q3501	4822 130 62768	TR 2SD1468S-S
Q3551	4822 130 62768	TR 2SD1468S-S
Q3601	4822 130 61189	TR DTC114TS
Q3602	4822 130 61189	TR DTC114TS
Q3603	4822 130 61189	TR DTC114TS
Q3604	4822 130 61189	TR DTC114TS
Q3605	4822 130 60945	TR 2SC3330-U
Q3606	4822 130 42304	TR 2SD734-G
Q3607	4822 130 60754	TR 2SC3331-U
Q3608	4822 130 60754	TR 2SC3331-U
Q3609	4822 130 60165	TR 2SA608-G-SPA
Q3610	4822 130 62503	TR DTC114YS
Q3612	4822 130 62776	TR 2SC3495
Q3651	4822 130 62773	TR 2SB598-F-NP
Q3750	4822 130 61188	TR DTC144TS
Q3751	4822 130 61188	TR DTC144TS
Q3752	4822 130 61188	TR DTC144TS
Q3753	4822 130 61188	TR DTC144TS
Q3754	4822 130 62768	TR 2SD1468S-S
Q3851	4822 130 61188	TR DTC144TS
Q3852	4822 130 61188	TR DTC144TS
Q3853	4822 130 61188	TR DTC144TS
Q3854	4822 130 62768	TR 2SD1468S-S
Q3901	4822 130 60754	TR 2SC3331-U
R3609	⚠4822 116 83986	FUSIBLE RES 12 J- 1/4W
R3901	⚠4822 116 60314	FUSIBLE RES 10 J- 1/4W
R3905	⚠4822 116 60314	FUSIBLE RES 10 J- 1/4W
SVR31	4822 100 11755	POTENTIOMETER,220 OHM (B), PLAY GAIN
SVR32	4822 100 11755	POTENTIOMETER,220 OHM (B), PLAY GAIN
SVR33	4822 100 11912	POTENTIOMETER,6.8K OHM (B), REC GAIN
SVR34	4822 100 11912	POTENTIOMETER,6.8K OHM (B), REC GAIN
SVR35	4822 100 11913	POTENTIOMETER,68K OHM (B), BIAS
SVR36	4822 100 11913	POTENTIOMETER,68K OHM (B), BIAS
SVR37	4822 100 11958	POTENTIOMETER,330 OHM (B), TAPE
SVR38	4822 100 11959	POTENTIOMETER,10K OHM (B), TAPE
SVR39	4822 100 20681	POTENTIOMETER,2.2K OHM (B), TAPE SPEED

LED (LCD BACK LIGHT) P.C.BOARD ASSY

Ref. No.	Part No.	Description
DA78		ASSY,PCB,LCD IND
CN401		ASSY,CONNECTOR-S,2P,FRONT
D4001	4822 130 83139	LED CL-170YG-CD-C
or	4822 130 83139	LED CL-170YG-CD-D
or	4822 130 83139	LED CL-170YG-CD-E
D4002	4822 130 83139	LED CL-170YG-CD-C
or	4822 130 83139	LED CL-170YG-CD-D
or	4822 130 83139	LED CL-170YG-CD-E
D4003	4822 130 83139	LED CL-170YG-CD-C
or	4822 130 83139	LED CL-170YG-CD-D
or	4822 130 83139	LED CL-170YG-CD-E
D4004	4822 130 83139	LED CL-170YG-CD-C
or	4822 130 83139	LED CL-170YG-CD-D
or	4822 130 83139	LED CL-170YG-CD-E
D4005	4822 130 83139	LED CL-170YG-CD-C
or	4822 130 83139	LED CL-170YG-CD-D
or	4822 130 83139	LED CL-170YG-CD-E
D4006	4822 130 83139	LED CL-170YG-CD-C
or	4822 130 83139	LED CL-170YG-CD-D
or	4822 130 83139	LED CL-170YG-CD-E
D4007	4822 130 83139	LED CL-170YG-CD-C
or	4822 130 83139	LED CL-170YG-CD-D
or	4822 130 83139	LED CL-170YG-CD-E
D4008	4822 130 83139	LED CL-170YG-CD-C
or	4822 130 83139	LED CL-170YG-CD-D
or	4822 130 83139	LED CL-170YG-CD-E
D4009	4822 130 83139	LED CL-170YG-CD-C
or	4822 130 83139	LED CL-170YG-CD-D
or	4822 130 83139	LED CL-170YG-CD-E
D4010	4822 130 83139	LED CL-170YG-CD-C
or	4822 130 83139	LED CL-170YG-CD-D
or	4822 130 83139	LED CL-170YG-CD-E
D4011	4822 130 83139	LED CL-170YG-CD-C
or	4822 130 83139	LED CL-170YG-CD-D
or	4822 130 83139	LED CL-170YG-CD-E
D4012	4822 130 83139	LED CL-170YG-CD-C
or	4822 130 83139	LED CL-170YG-CD-D
or	4822 130 83139	LED CL-170YG-CD-E
D4013	4822 130 83139	LED CL-170YG-CD-C
or	4822 130 83139	LED CL-170YG-CD-D
or	4822 130 83139	LED CL-170YG-CD-E
D4014	4822 130 83139	LED CL-170YG-CD-C
or	4822 130 83139	LED CL-170YG-CD-D
or	4822 130 83139	LED CL-170YG-CD-E
D4015	4822 130 83139	LED CL-170YG-CD-C
or	4822 130 83139	LED CL-170YG-CD-D
or	4822 130 83139	LED CL-170YG-CD-E
D4016	4822 130 83139	LED CL-170YG-CD-C
or	4822 130 83139	LED CL-170YG-CD-D
or	4822 130 83139	LED CL-170YG-CD-E
D4017	4822 130 83139	LED CL-170YG-CD-C
or	4822 130 83139	LED CL-170YG-CD-D
or	4822 130 83139	LED CL-170YG-CD-E
D4018	4822 130 83139	LED CL-170YG-CD-C
or	4822 130 83139	LED CL-170YG-CD-D
or	4822 130 83139	LED CL-170YG-CD-E
D4019	4822 130 83139	LED CL-170YG-CD-C
or	4822 130 83139	LED CL-170YG-CD-D
or	4822 130 83139	LED CL-170YG-CD-E
D4020	4822 130 83139	LED CL-170YG-CD-C
or	4822 130 83139	LED CL-170YG-CD-D
or	4822 130 83139	LED CL-170YG-CD-E

TOOL FOR REPAIRABLE (TAPE DECK / AMPLIFIER UNIT)

Please use the tools (PCB relay cord) for repairable

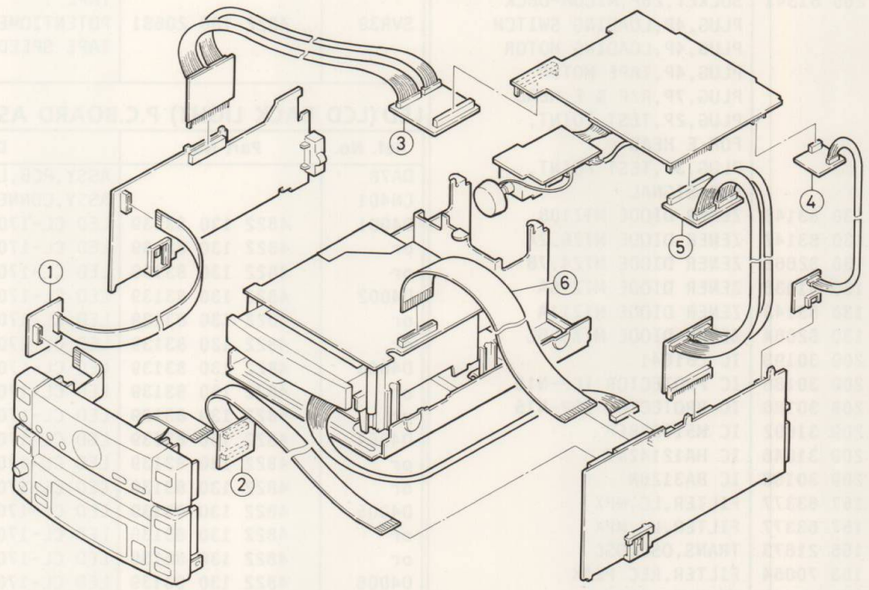

NO.	POS NO.	PARTS CODE
①	Z903	4822 321 61779
②	Z904	4822 321 61781
③	Z905	4822 321 61782
④	Z906	4822 321 61783
⑤	Z907	4822 321 61784
⑥	Z908	4822 321 61785

EXPLODED VIEW (TAPE LOADING MECHANISM)

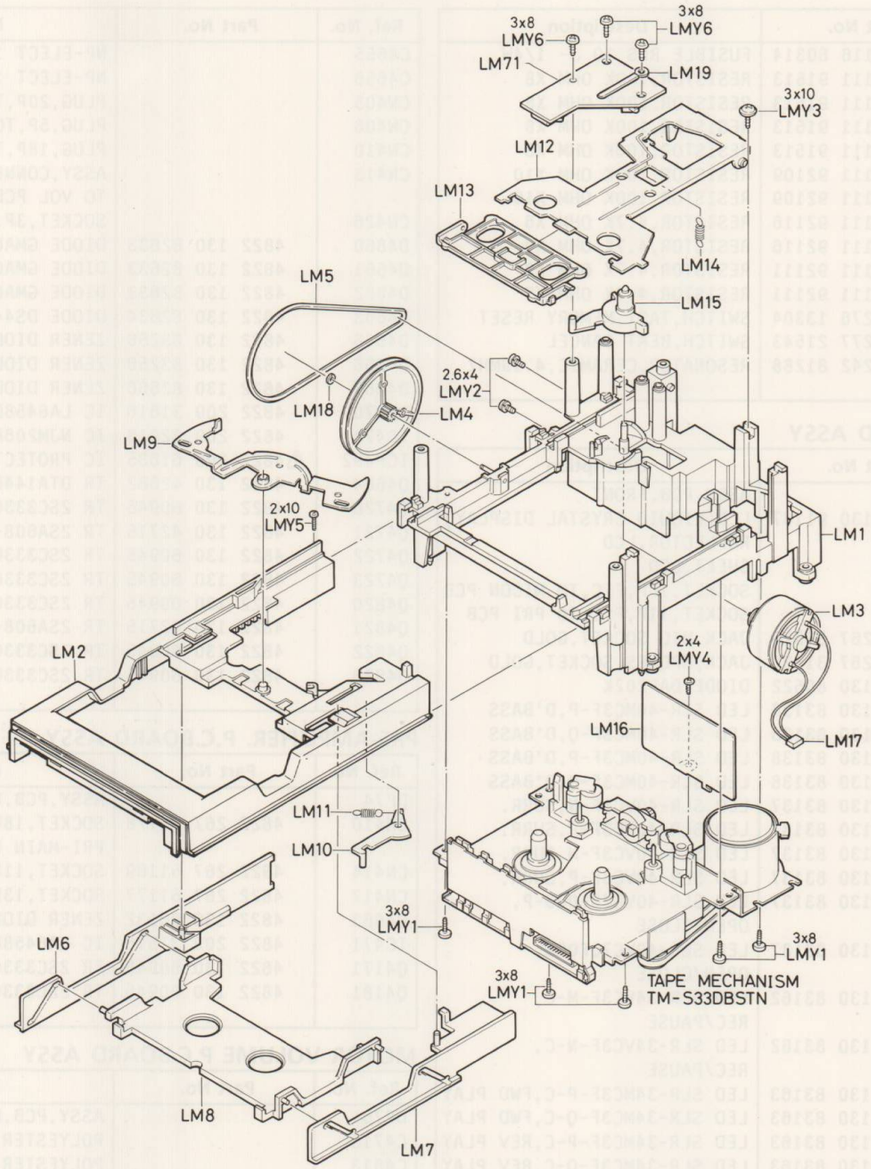

PARTS LIST (TAPE LOADING MECHANISM)

TAPE LOADING MECHANISM (TM-S33DIN/JP)

Ref. No.	Part No.	Description
LM1	4822 464 50932	ASSY,CHASSIS,LOADING MECHA BASE
LM2	4822 464 70601	TABLE,LOADING,CASSETTE TRAY
LM3	4822 361 21572	ASSY,MOTOR,TRAY DRIVE
LM4	4822 528 50343	PULLEY,TRAY DRIVE
LM5	4822 358 31204	BELT,SQUARE,PULLEY DRIVE
LM6	4822 532 12195	SLIDE,RACK
LM7	4822 532 12196	SLIDE,RACK ENGAGE
LM8	4822 403 70725	PLATE,CASSETTE SUPPORT
LM9	4822 403 70697	LEVER,RACK ENGAGE
LM10	4822 403 70698	LEVER,LOCK
LM11	4822 492 33351	SPRING,TENS,LOCK LVR PULL
LM12	4822 403 70699	LEVER,CHACK LEVER
LM13	4822 403 70701	LEVER,STABILIZER
LM14	4822 492 33352	SPRING,TENS,CHACK LVR PULL
LM15	4822 403 70702	LEVER,CHACK UP/DOWN
LM16		SHIELD,HEAD
LM17		ASSY,CONNECTOR-S,2P, LOADING MOTOR
LM18	4822 532 12187	SPECIAL WASHER,PULLEY FIX
LM19		LUG,LEAD RETAINER

TAPE LOADING MECHANISM P.C.BOARD ASSY

Ref. No.	Part No.	Description
LM71		ASSY,PCB,LOADING MECHANISM SWITCH
CN001		PLUG,4P,SWITCH LEAD OUT
S001	4822 277 21631	SWITCH,LEVER,TRAY SENSER
S002	4822 277 21632	SWITCH,LEVER,TRAY SENSER

FIXING PARTS FOR TAPE LOADING MECHANISM

Ref. No.	Part No.	Description
LMY1		SCR S-TPG BIN 3X8,BASE MECHA FIX
LMY2		SCR PAN+W 2.6X4,MOTOR FIX
LMY3	4822 502 12357	SCR S-TPG BRZ+FLG 3X10, CHACK LVR FIX
LMY4		SCR S-TPG PAN 2X4,SHIELD FIX
LMY5		SCR S-TPG PAN 2X10,TRAY STOPPER
LMY6		SCR S-TPG BIN 3X8,PCB FIX

EXPLODED VIEW (TAPE DECK MECHANISM)

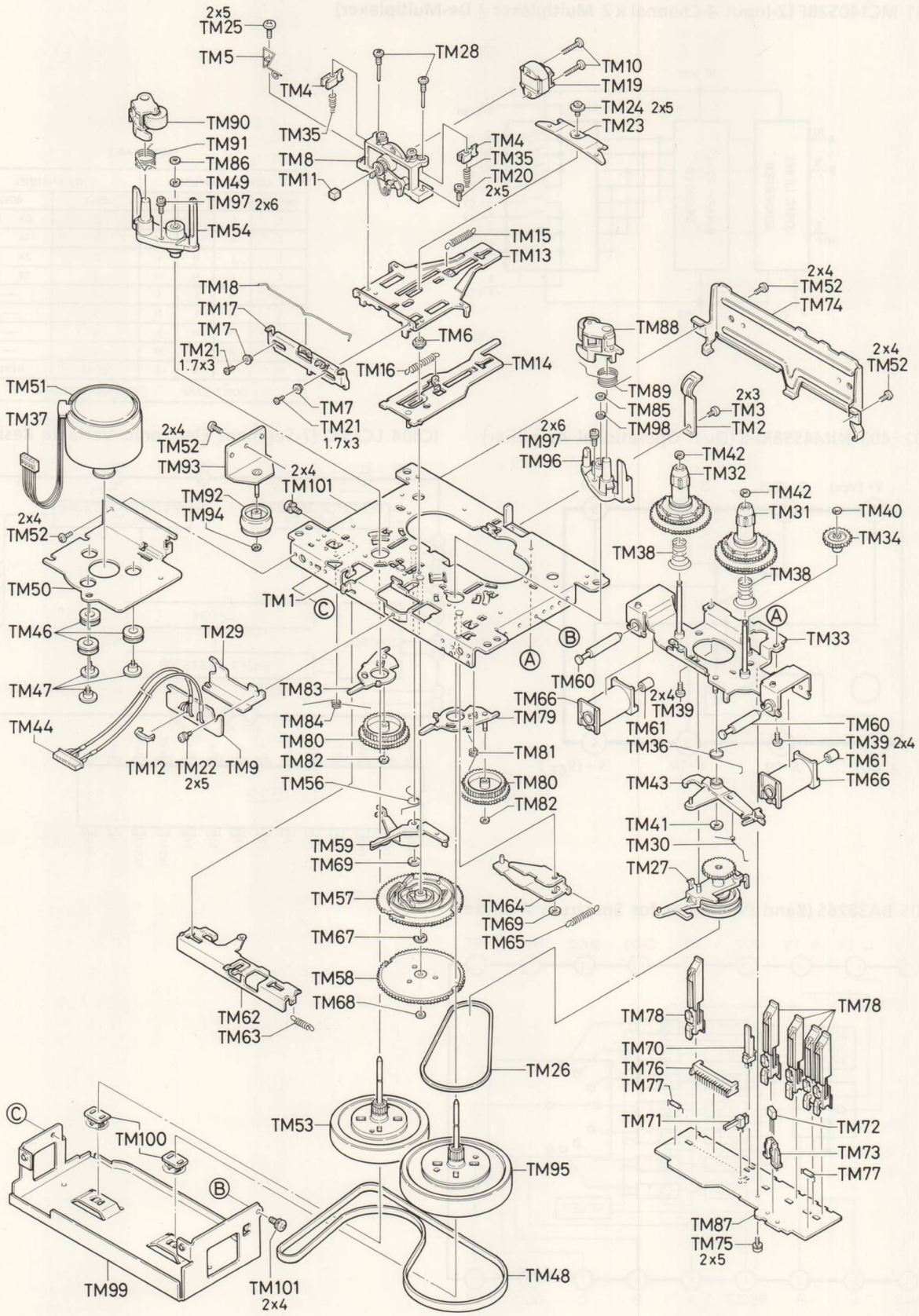

PARTS LIST (TAPE DECK MECHANISM)

TAPE MECHANISM (TM-S33DBSTN)

Ref. No.	Part No.	Description
TM1		ASSY,CHASSIS,BASE
TM2	4822 403 70696	PLATE,PACK SPRING
TM3	4822 502 13791	SPECIAL SCREW,C TAPP M2X3
TM4	4822 402 61385	GUIDE,TAPE
TM5	4822 492 71182	SPRING,WIRE,CLUMP (V)
TM6	4822 532 12094	COLLAR,PANEL
TM7	4822 532 12095	COLLAR,CHANGE PLAY LEVER
TM8	4822 402 61389	ASSY,BRACKET-E,HEAD BASE
TM9		P.C.BOARD,RELAY BOARD
TM10	4822 502 13792	SPECIAL SCREW,HEAD COLLAR
TM11		SPACER,HEAD LEAD
TM12		FIXER,WIRE CLAMP
TM13	4822 403 70707	SLIDE,HEAD PANEL (A)
TM14	4822 403 70708	ASSY,SLIDE,HEAD PANEL (B)
TM15	4822 492 33282	SPRING,TENS,RC
TM16	4822 492 33283	SPRING,TENS,PANEL
TM17	4822 403 70703	LEVER,CHANGE PLAY
TM18	4822 492 70936	SPRING,WIRE,PINCH ROLLER
TM19	4822 249 10471	HEAD,R/P
TM20	4822 502 13793	SPECIAL SCREW,TAMS M2X5
TM21	4822 502 13794	SPECIAL SCREW,FOR CAMERA M1.7X3
TM22	4822 502 13795	SPECIAL SCREW,S TAPP TAMS M2X5
TM23	4822 492 70937	SPRING,PLATE,PANEL
TM24	4822 502 13796	SPECIAL SCREW,CUPS TAPP M2X5
TM25	4822 502 13797	SPECIAL SCREW,BAIND M2X5
TM26	4822 358 31139	BELT,FLAT,REV/FWD
TM27	4822 528 50328	ASSY,PULLEY,REV/FWD CLUTCH
TM28	4822 502 13798	SPECIAL SCREW,GUIDE
TM29		PLATE,SHIELD,HEAD
TM30	4822 492 71181	SPRING,WIRE,P2
TM31	4822 528 10855	ASSY,REEL,TAKE-UP,FWD
TM32	4822 528 10856	ASSY,REEL,TAKE-UP,REV
TM33		ASSY,BRACKET-M,REEL BASE
TM34	4822 522 33103	GEAR,F.FWD
TM35	4822 492 52265	SPRING,COMP, GUIDE
TM36	4822 492 71183	SPRING,WIRE,FEV/RWD TRIGGER ARM
TM37		ASSY,CONNECTOR-S,4P,TAPE MOTOR
TM38	4822 492 52266	SPRING,COMP,BACK TENSION,REV
TM39	4822 502 13799	SPECIAL SCREW,C TAPPING SCREW M2X4
TM40	4822 532 12083	SPECIAL WASHER,PLASTIC CUT 1.2X3X0.25
TM41	4822 532 12084	SPECIAL WASHER,PLASTIC CUT 2.1X5X0.5
TM42	4822 532 12085	SPECIAL WASHER,HL CUT 1.4X3.2X0.4
TM43	4822 403 70704	LEVER,REV/FWD TRIGGER ARM
TM44		ASSY,CONNECTOR-S,9P,R/P & E HEAD LEAD
TM45		CUSHION,MAT
TM46	4822 466 93017	CUSHION,RUBBER,MOTOR
TM47	4822 502 13801	SPECIAL SCREW,MOTOR COLLAR
TM48	4822 358 31141	BELT,FLAT,MAIN
or	4822 358 31141	BELT,FLAT,MAIN
TM49	4822 532 12091	SPECIAL WASHER,HL CUT 1.55X3.5X0.5
TM50		BRACKET-M,MOTOR
TM51	4822 361 21554	ASSY,MOTOR,DRIVE
TM52	4822 502 21237	SPECIAL SCREW,C TAPP M2X4
TM53	4822 528 60399	ASSY,FLYWHEEL,REV
TM54	4822 403 70726	ASSY,BRACKET-E,FLYWHEEL METAL,REV
TM55	4822 466 93018	CUSHION,RUBBER,MOTOR
TM56	4822 492 42557	SPRING,WIRE,MAIN TRIGGER ARM
TM57	4822 522 33104	GEAR,MAIN
TM58	4822 522 33105	GEAR,REV/FWD CAM
TM59	4822 403 70705	LEVER,MAIN TRIGGER ARM
TM60		SHAFT,FOR PLUNGER
TM61		HOLDER,FOR PLUNGER
TM62	4822 403 70706	ASSY,SLIDE,CHANGE LEVER
TM63	4822 492 33353	SPRING,TENS,CHANGE SLIDE LEVER
TM64	4822 403 70709	ASSY,LEVER,PLAY KICK
TM65	4822 492 33285	SPRING,TENS,PLAY KICK LEVER
TM66	4822 281 50161	MAGNETIC COIL,SOLENOID
TM67	4822 530 70597	SPECIAL WASHER,E RING D2.0
TM68	4822 532 12086	SPECIAL WASHER,HL CUT 1.55X3.5X0.5
TM69	4822 532 12087	SPECIAL WASHER,HL CUT 2.1X5X0.4
TM70	4822 271 30758	SWITCH,LEAF,
TM71	4822 271 30759	SWITCH,LEAF,
TM72	4822 209 30134	IC LB9051A,HALL ELEMENT
TM73		HOLDER,IC PROTECTOR
TM74		SLIDE,SWITCH PROTECTOR
TM75	4822 502 13802	SPECIAL SCREW,S TAPP TAMS M2X5
TM76		PLUG,4P
TM77	4822 130 32508	DIODE DSF10C
TM78	4822 271 30757	SWITCH,LEAF,
TM79	4822 403 70711	ASSY,LEVER,TRIGGER GEAR ARM,FWD
TM80	4822 522 33106	GEAR,TRIGGER GEAR (A)
TM81	4822 492 71184	SPRING,WIRE,TRIGGER GEAR ARM,FWD
TM82	4822 532 12083	SPECIAL WASHER,PLASTIC,CUT 1.2X3X0.25
TM83	4822 403 70712	ASSY,LEVER,TRIGGER GEAR ARM,REV
TM84	4822 492 33283	SPRING,WIRE,TRIGGER GEAR ARM,REV
TM85	4822 532 12093	SPECIAL WASHER,NYLON 2.1X3.5X0.5
TM86	4822 532 52354	SPECIAL WASHER,NYLON 1.8X3.5X0.5
TM87		P.C.BOARD,MECHANISM
TM88	4822 528 70749	ASSY,PINCHROLLER,ARM,FWD
TM89	4822 492 42562	SPRING,WIRE,P ARM,FWD
TM90	4822 528 70751	ASSY,PINCHROLLER,ARM,REV
TM91	4822 492 42563	SPRING,WIRE,P ARM,REV
TM92	4822 528 50344	C PULLEY
TM93		ASSY,BRACKET-M,C PULLEY
TM94	4822 532 12191	SPECIAL WASHER,1.2X3.8X0.3
TM95	4822 528 50345	ASSY,FLYWHEEL,FWD
TM96	4822 403 70727	ASSY,BRACKET-E,FLYWHEEL METAL,FWD
TM97	4822 502 13804	SPECIAL SCREW,S TAPP SCREW M2X6
TM98	4822 532 12088	SPECIAL WASHER,HL WASHER CUT 1.8X4X0.5
TM99		BRACKET-M,FLY WHEEL
TM100		SUPORT,FLY WHEEL
TM101		TAMS M2X4

IC BLOCK DIAGRAM (TAPE DECK AMPLIFIER)

IC371 M51167BFP (Tape Deck Amplifier System)

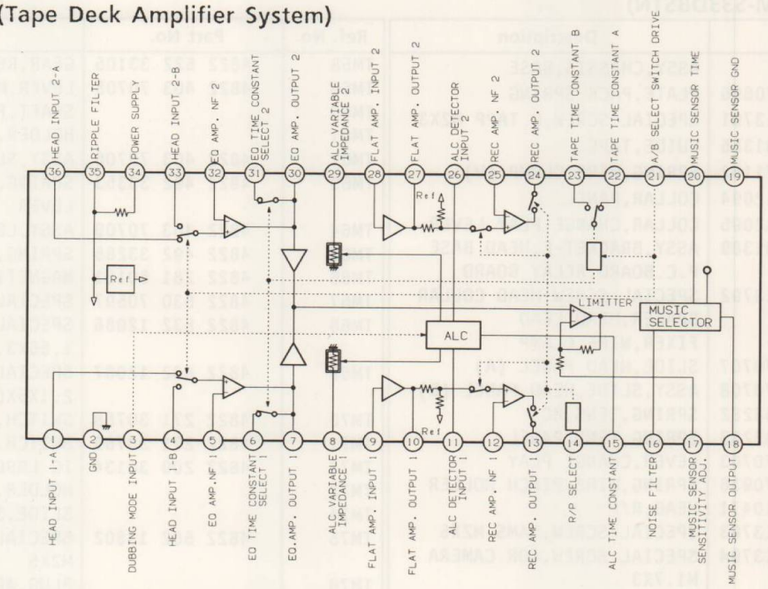

IC372 HA12142NT (Dolby-B & C Noise Reduction System)

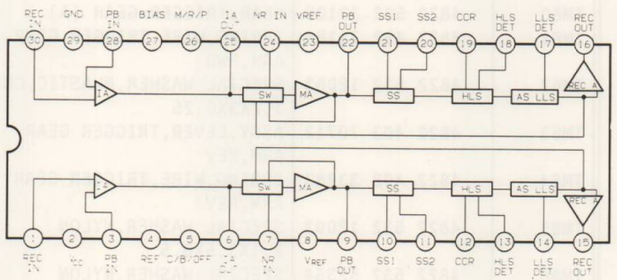

IC361 LB1641 (Motor Driver)

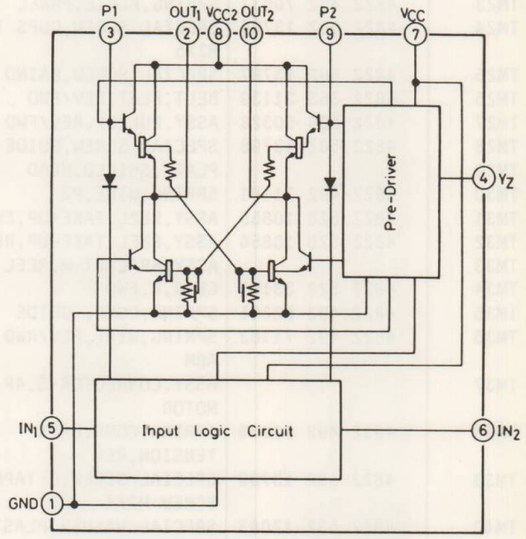

Input		Output		Action
IN_1	IN_2	OUT_1	OUT_2	
0	0	0	0	Brake
1	0	1	0	Normal(Reverse)Rotary
0	1	0	1	Reverse(Normal)Rotary
1	1	0	0	Brake

IC373 BA3126N (REC / PLAY Head Select Switch)

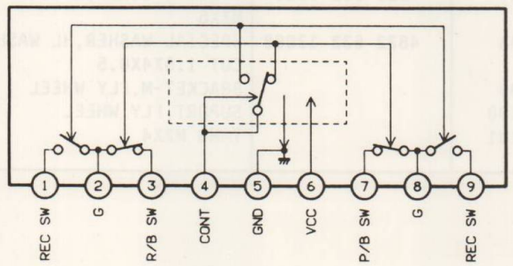

IC BLOCK DIAGRAM (AMPLIFIER)

IC401 MC14052BF (2-Input 4-Channel x 2 Multiplexer / De-Multiplexer)

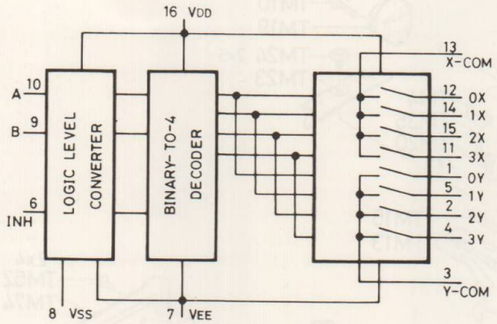

TRUTH TABLE

CONTROL INPUTS				{ON} CHANNEL	
INHIBIT	C	B	A	4051	4052
L	L	L	L	0	0X 0Y
L	L	L	H	1	1X 1Y
L	L	H	L	2	2X 2Y
L	L	H	H	3	3X 3Y
L	H	L	L	4	-----
L	H	L	H	5	-----
L	H	H	L	6	-----
L	H	H	H	7	-----
H	X	X	X	NONE	NONE

X : DON'T CARE C(4052) : EXCEPT

IC402 · 403 NJM4558M-S (Dual Operational Amplifier)

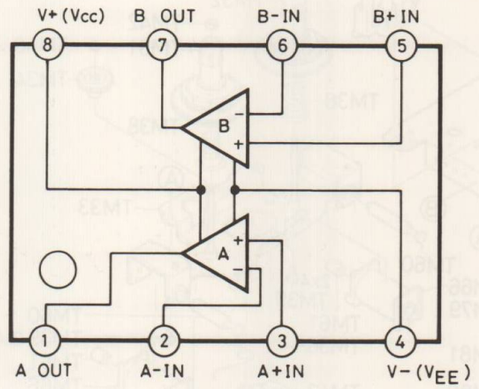

IC404 LC7522 (7-Segment Electronic Variable Resistor)

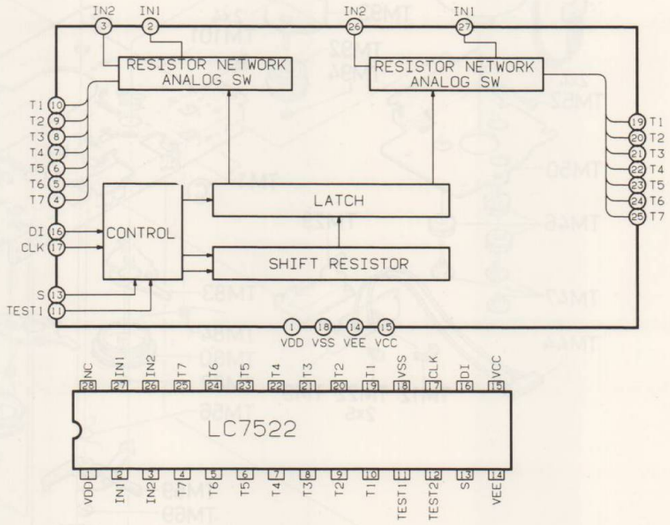

IC405 BA3826S (Band Pass Filter for Spectrum Analyzer)

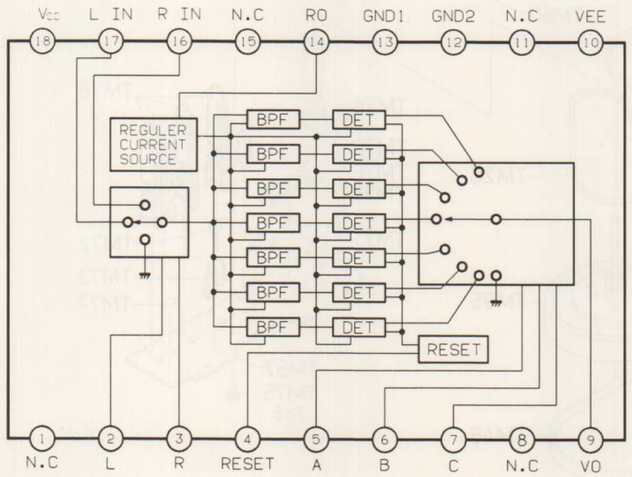

IC BLOCK DIAGRAM (AMPLIFIER)

IC406 NJM78L05A (3-Terminal Voltage Regulator)

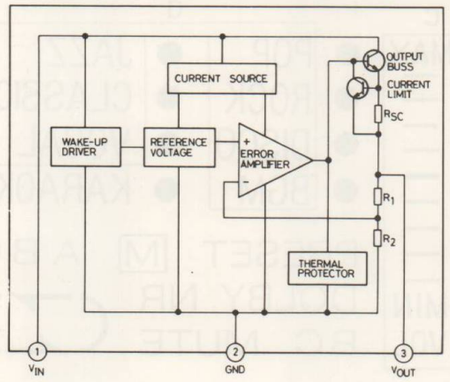

IC411 NJM7812FA (3-Terminal Voltage Regulator)

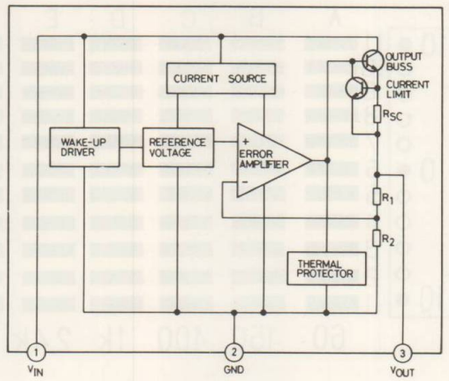

IC408 µPD75512GF-144-3B9 (Micro Processor)

PIN No.	SIGNAL NAME	PORT NAME	DESCRIPTION	I/O	ACTIV	P OFF
1	VO3826 P	AN0	Band Pass VO-IN from BA3826S	I	---	---
2	AVref	AVref	Reference Voltage of AD	I	---	---
3	VDD	VDD	+5V	---	---	---
4	VDD	(VPP)	+5V	---	---	---
5	PULLUP P	P113	Pull up Signal of AVref	O	H	H
6	RVOLDN P	P112	Rear Volume Down Signal	O	H	L
7	RVOLUP P	P111	Rear Volume Up Signal	O	H	L
8	SELCNT P	P110	Selection Control Signal	O	H	L
9	R3826 P	P103	Reset Control of BA3826S (SEL AV)	I/O	---	L
10	A3826 P	P102	Band Pass A Control of BA3826S (SEL PHON)	I/O	---	L
11	B3826 P	P101	Band Pass B Control of BA3826S (SEL CARA)	I/O	---	L
12	C3826 P	P100	Band Pass C Control of BA3826S (SEL USA)	I/O	---	L
13	VOLDN P	P93	Volume Down Signal (SEL VOL)	I/O	H	L
14	VOLUP P	P92	Volume Up Signal (SEL RVOL)	I/O	H	L
15	CK7522 P	P91	Equalizer Clock of LC7522 (SEL FADE)	I/O	---	L
16	DI7522 P	P90	Data In from LC7522 (SEL DOLC)	I/O	---	L
17	AMSS P	SI1/P83	Input of Music Brank (Music Brank : L)	I	L	---
18	DA7582 P	S01/P82	Data Signal to LC7582 (SEL FNC6)	O	H	L
19	CK7582 P	SCK1/P81	Clock Signal to LC7582 (SEL S33)	O	H	L
20	MAINOF P	PPO/P80	Main Power Off Signal	I	H	L
21	PLAY SP	KR7/P73	Play Detection Signal	I	L	---
22	FFREW SP	KR6/P72	FF/REW Detection Signal	I	L	---
23	PACK SP	KR5/P71	Pack Detection Signal	I	L	---
24	REEL P	KR4/P70	Reel Rotate Detection Signal	I	---	---
25	GFOW SP	KR3/P63	Forward Safety REC Detection Signal	I	L	---
26	GREV SP	KR2/P62	Reverse Safety REC Detection Signal	I	L	---
27	CE7582 P	KR1/P61	CE(Chip Enable) of LC7582 (SEL DECK)	I/O	L	L
28	KARAOK P	KR0/P60	Karaoke Control Signal (LED) (DIGITAL ECHO)	O	H	L
29	MOTOR P	P53	Motor Control Signal	O	L:ON	Hi-imp
30	PLYSOL P	P52	Play Solenoid Control Signal	O	L:ON	Hi-imp
31	FRSOL P	P51	FF/REW Solenoid Control Signal	O	L:ON	Hi-imp
32	OPNIND P	P50	Open/Close Display (LED)	O	L:ON	Hi-imp
33	GND	VSS	Ground	---	---	---
34	SURR P	P43	Surround Control Signal (LED)	O	L	Hi-imp
35	BXPND P	P42	BASS Xpander Control Signal (LED)	O	L	Hi-imp
36	SPRY P	P41	Speaker Relay Control Signal	O	L	Hi-imp
37	PORY P	P40	Power Relay Control Signal	O	L	Hi-imp
38	RECIND P	P33/MD3	Tape Record Indicator LED	O	L	H
39	REVIND P	P32/MD2	Tape Reverse Indicator LED	O	L	H
40	FOWIND P	P31/MD1	Tape Forward Indicator LED	O	L	H
41	VOLIND P	P30/MD0	Volume Indicator LED	O	L	H
42	CSTOP P	P23/BUZ	CD Stop Signal	O	H	L
43	DUB P	P22/PCL	CD Dubbing Control Signal	O	H	L
44	MCCW P	P21	Loading Motor Control (Counter clock Wise) Signal	O	H	L
45	MCW P	P20/PT00	Loading Motor Control (clock Wise) Signal	O	H	L
46	CLOSE SP	P13/T10	Tape Tray Close Detection Signal	I	L	---

ACTIV : Active Level P OFF : Power Off Time Level

IC BLOCK DIAGRAM (AMPLIFIER)

PIN No.	SIGNAL NAME	PORT NAME	DESCRIPTION	I/O	ACTIV	P OFF
47	SET SP	P12/INT2	Cassette Set Detection Signal	I	L	---
48	OPEN SP	P11/INT1	Tape Tray Open Detection Signal	I	L	---
49	IR P	P10/INT0	Infrared Ray Receiving (Remocon) Signal	I	L:IN	---
50	CTDATA P	P03/SI0	Data In from CT Micro Processor (µPD65117)	I	---	---
51	CTBUSY P	P02/SO0	Busy Out to CT Micro Processor (µPD65117)	O	L	L
52	CTCLK P	P01/SCK0	Clock In from CT Micro Processor (µPD65117)	I	---	---
53	PDOWN P	P00/INT4	AC ON/OFF Detection Signal	I	H:ON	H
54	VSS	VSS	Ground	---	---	---
55	VSS	XT1	Not Used (VSS)	I	---	---
56	NC	XT2	Not Used (Open)	O	---	---
57	VSS	IC	Ground	---	---	---
58	X1	XI	X'tal In (4.19 MHz)	I	---	---
59	X2	XO	X'tal Out (4.19 MHz)	O	---	---
60	RESET	RESET	Reset	I	L	H
61	OSC P	P143	OSC Control Signal H : Off L : On	O	L	Hi-imp
62	DRP P	P142	Dolby Rec/Play Control Signal H : Rec L : Play	O	H	L
63	DBC P	P141	Dolby B/C Control Signal	O	---	Hi-imp
64	DONOF P	P140	Dolby ON/OFF Control Signal	O	---	Hi-imp
65	PMUTE P	P133	Play Mute Signal H : On L : Off	O	L	Hi-imp
66	RMUTE P	P132	Rec Mute Signal H : On L : Off	O	L	Hi-imp
67	MUTE P	P131	∞ Mute Signal H : On L : Off	O	L	Hi-imp
68	AMUTE P	P130	-20dB Mute Signal H : On L : Off	O	L	Hi-imp
69	MVCNT P	P123	Loading Motor Voltage Control Signal	O	L	Hi-imp
70	FUNCC P	P122	C Control Signal of Function IC	O	---	Hi-imp
71	FUNCB P	P121	B Control Signal of Function IC	O	---	Hi-imp
72	FUNCA P	P120	A Control Signal of Function IC	O	---	Hi-imp
73	A-VSS	AVSS	AD Ground	---	---	---
74	SEL GEQ	AN7/P153	Selection Signal of Graphic Equalizer	I	---	---
75	HEAT P	AN6/P152	Thermal Detection Signal	I	DC	---
76	VOLRDC P	AN5/P151	DC of Rear Volume	I	DC	---
77	VOLDC P	AN4/P150	DC of Volume	I	DC	---
78	ADKEY2	AN3	Key Switch 2	I	DC	---
79	ADKEY1	AN2	Key Switch 1	I	DC	---
80	ADKEY0	AN1	Key Switch 0	I	DC	---

ACTIV : Active Level P OFF : Power Off Time Level

TRUTH TABLE OF PORT FOR IC408 µPD75512 (Micro Processor)

Function Control

NAME	PORT	CD	TAPE	TUNER	AV1	AV2	PHONO
FUNC A	P120 (Pin 72)	H	L	H	L	H	H
FUNC B	P121 (Pin 71)	H	L	L	H	L	H
FUNC C	P122 (Pin 70)	L	H	H	L	L	L

H : HIGH L : LOW

BA3826S Band Pass A·B·C Signal Control

A3826	P102 (Pin 10)	H	L	H	L	H	L	H	L
B3826	P101 (Pin 11)	H	H	L	L	H	H	L	L
C3826	P101 (Pin 12)	H	H	H	H	L	L	L	L
VO3826	AN0 (Pin 1)	O	f1	f2	f3	f4	f5	f6	f7
			60	150	400	1K	2.4K	6K	15K

H : HIGH L : LOW

Reset signal discharge peak hold that rectified at reset signal is high level.

Volume Control

NAME	PORT	POWER OFF	POWER ON	VOLUME UP	VOLUME DOWN
VOLUP	P92 (Pin 14)	LOW	HIGH	HIGH	LOW
VOLDN	P93 (Pin 13)	LOW	HIGH	LOW	HIGH

Tape Control

NAME	PORT	HIGH	LOW
PMUTE	P133 (Pin 65)	PLAY MUTING OFF	PLAY MUTING ON
RMUTE	P132 (Pin 66)	REC MUTING OFF	REC MUTING ON
OSC	P143 (Pin 61)	OSC CIRCUIT OFF	OSC CIRCUIT ON
DRP	P142 (Pin 62)	DOLBY PLAY-BACK	DOLBY RECORD

Amplifier Control

NAME	PORT	HIGH	LOW
PORY	P40 (Pin 37)	POWER RELAY OFF	POWER RELAY ON
SPRY	P41 (Pin 36)	SPEAKER RELAY OFF	SPEAKER RELAY ON
MUTE	P131 (Pin 67)	∞ MUTING ON	∞ MUTING OFF
AMUTE	P130 (Pin 68)	-20dB MUTING ON	-20dB MUTING OFF
BXPND	P42 (Pin 35)	BASS XPANDER OFF	BASS XPANDER ON
SURR	P43 (Pin 34)	SURROUND OFF	SURROUND ON
KARAOK	P60 (Pin 28)	KARAOKE PON ON	KARAOKE PON OFF

Tape Mode Control

MODE	PMUTE	RMUTE	OSC	DRP
STOP	HIGH	HIGH	HIGH	LOW
PLAY	LOW	HIGH	HIGH	LOW
REC PAUSE	LOW	HIGH	LOW	HIGH
RECORD	LOW	LOW	LOW	HIGH
DUBBING	LOW	LOW	LOW	LOW

Dolby Control

NAME	PORT	DOLBY OFF	DOLBY B	DOLBY C
DONOF	P140 (Pin 64)	LOW	HIGH	HIGH
DBC	P141 (Pin 63)	HIGH	LOW	HIGH

IC BLOCK DIAGRAM (AMPLIFIER)

IC470・471 LA6458D (Dual Operational Amplifier)

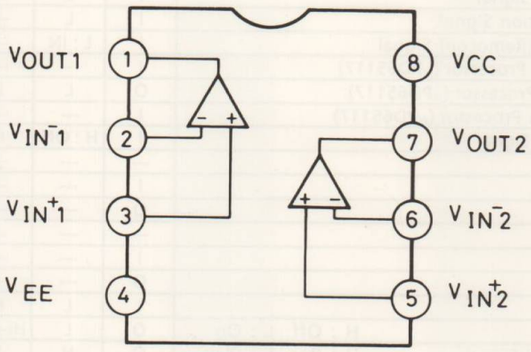

IC472 LC7582 (LCD Driver)

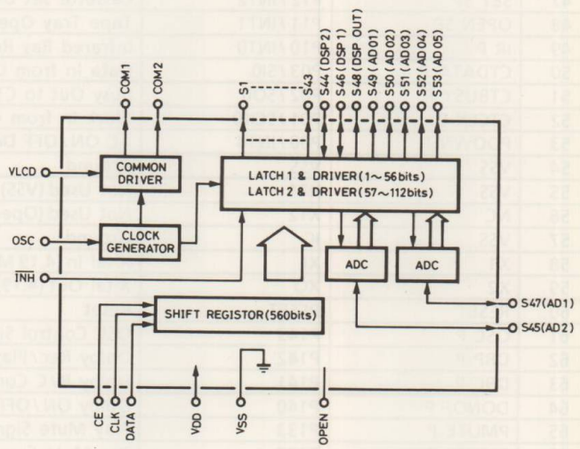

IC473 NJM4558M-S (Dual Operational Amplifier)

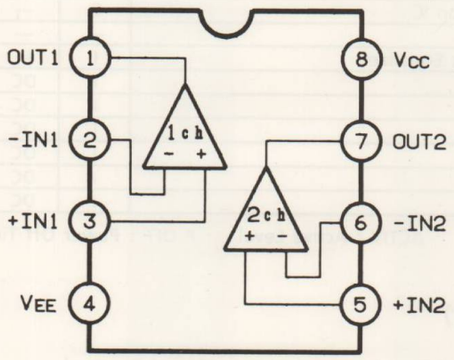

IC474 NJM2068S (Dual Operational Amplifier)

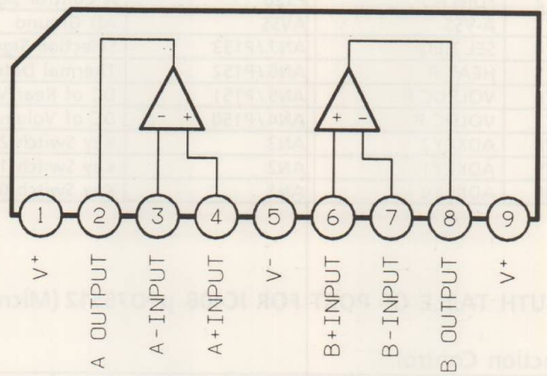

IC491 LB1641 (Volume Motor Driver)

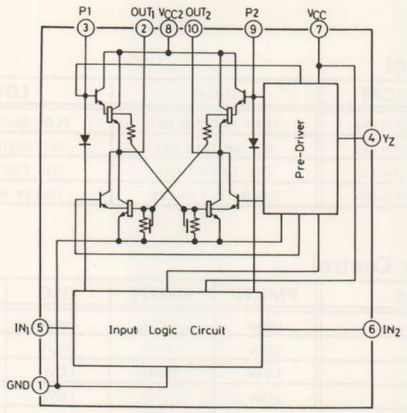

Input		Output		Action
IN_1	IN_2	OUT_1	OUT_2	
0	0	0	0	Brake
1	0	1	0	Normal(Reverse)Rotary
0	1	0	1	Reverse(Normal)Rotary
1	1	0	0	Brake

LCD (SPECTRUM ANALYZER)

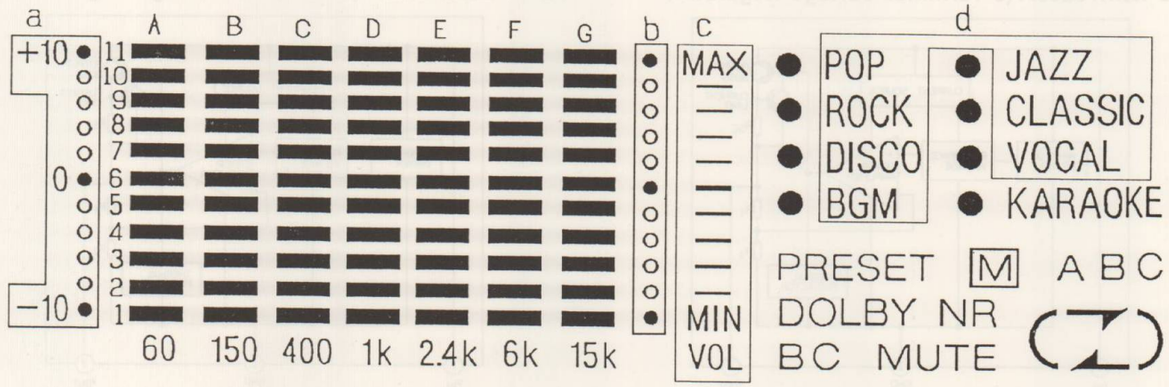

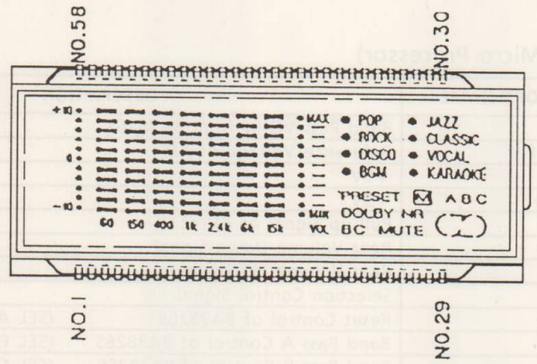

NO.	COM. 1	COM. 2
1		a
2	A5	B5
3	A4	B4
4	A3	B3
5	A2	B2
6	A1	B1
7		60・150
8	C5	D5
9	C4	D4
10	C3	D3
11	C2	D2
12		400・1K
13	C1	D1
14	E5	F5
15	E4	F4

NO.	COM. 1	COM. 2
16	E3	F3
17		2.4K・6K
18	E2	F2
19	E1	F1
20	G4	B (DOLBY)
21	G3	C (DOLBY)
22	G1	15K
23	G2	c
24		b
25	G5	DOLBY NR
26	G6	PRESET
27	(	MUTE
28	→	←
29	M	)
30	A	● (JAZZ)

NO.	COM. 1	COM. 2
31	B	● (CLAS)
32	C	● (VOCA)
33	KARAOKE	● (KARA)
34	G7	d
35	G8	● (BGM)
36	G9	● (DISC)
37	G10	● (ROCK)
38	G11	● (POP)
39	E8	F8
40	E9	F9
41	E10	F10
42	E11	F11
43	E7	F7
44	E6	F6
45	C9	D9

NO.	COM. 1	COM. 2
46	C9	D9
47	C10	D10
48	C11	D11
49	C8	D8
50	C7	D7
51	C6	D6
52	A10	B10
53	A11	B11
54	A8	B8
55	A7	B7
56	A6	B6
57	COM. 1	
58		COM. 2

WIRING CONNECTION (TAPE DECK / PRE-AMPLIFIER UNIT)

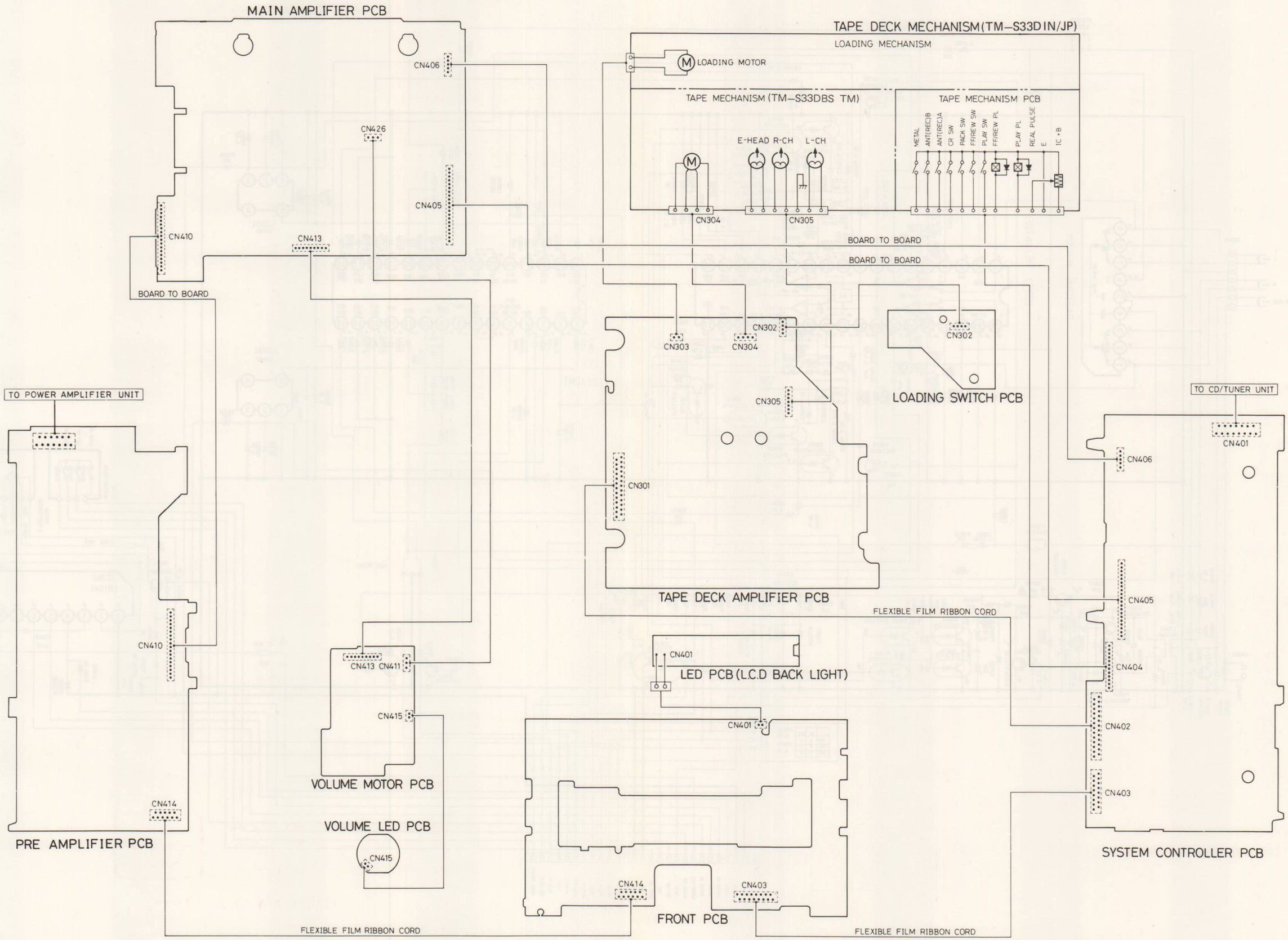

SCHEMATIC DIAGRAM (TAPE DECK AMPLIFIER)

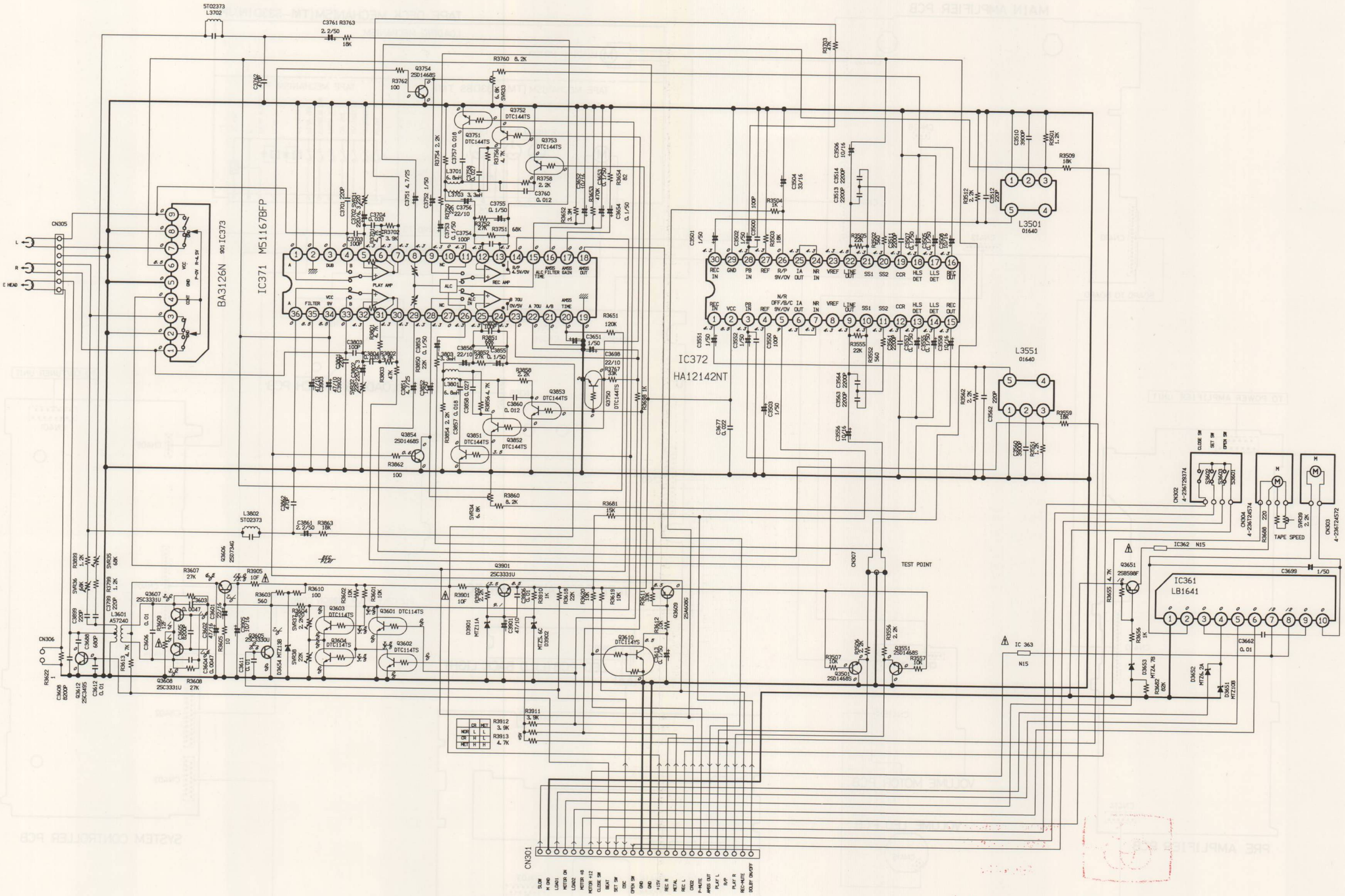

WIRING DIAGRAM (TAPE DECK AMPLIFIER)

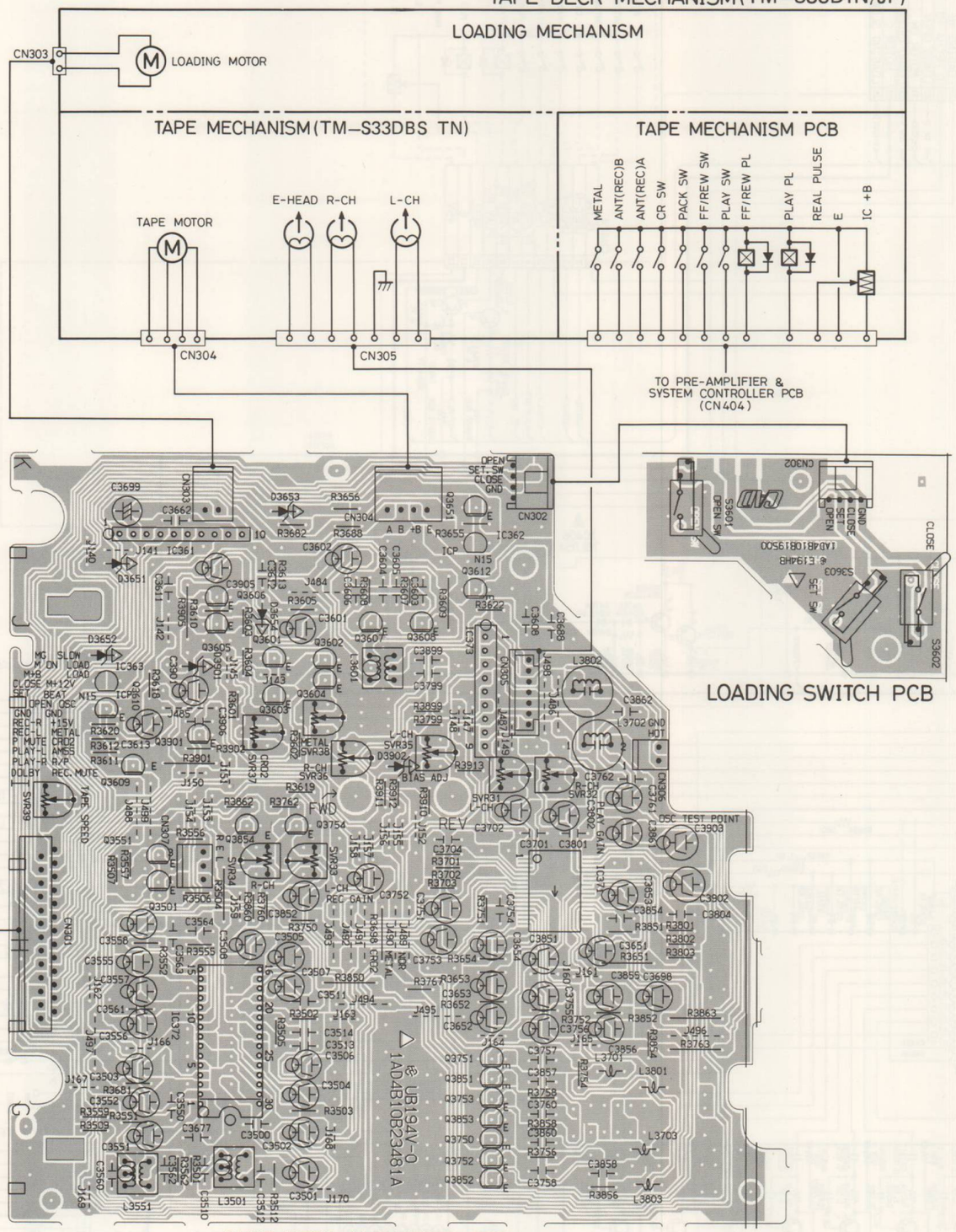

SCHEMATIC DIAGRAM (FRONT)

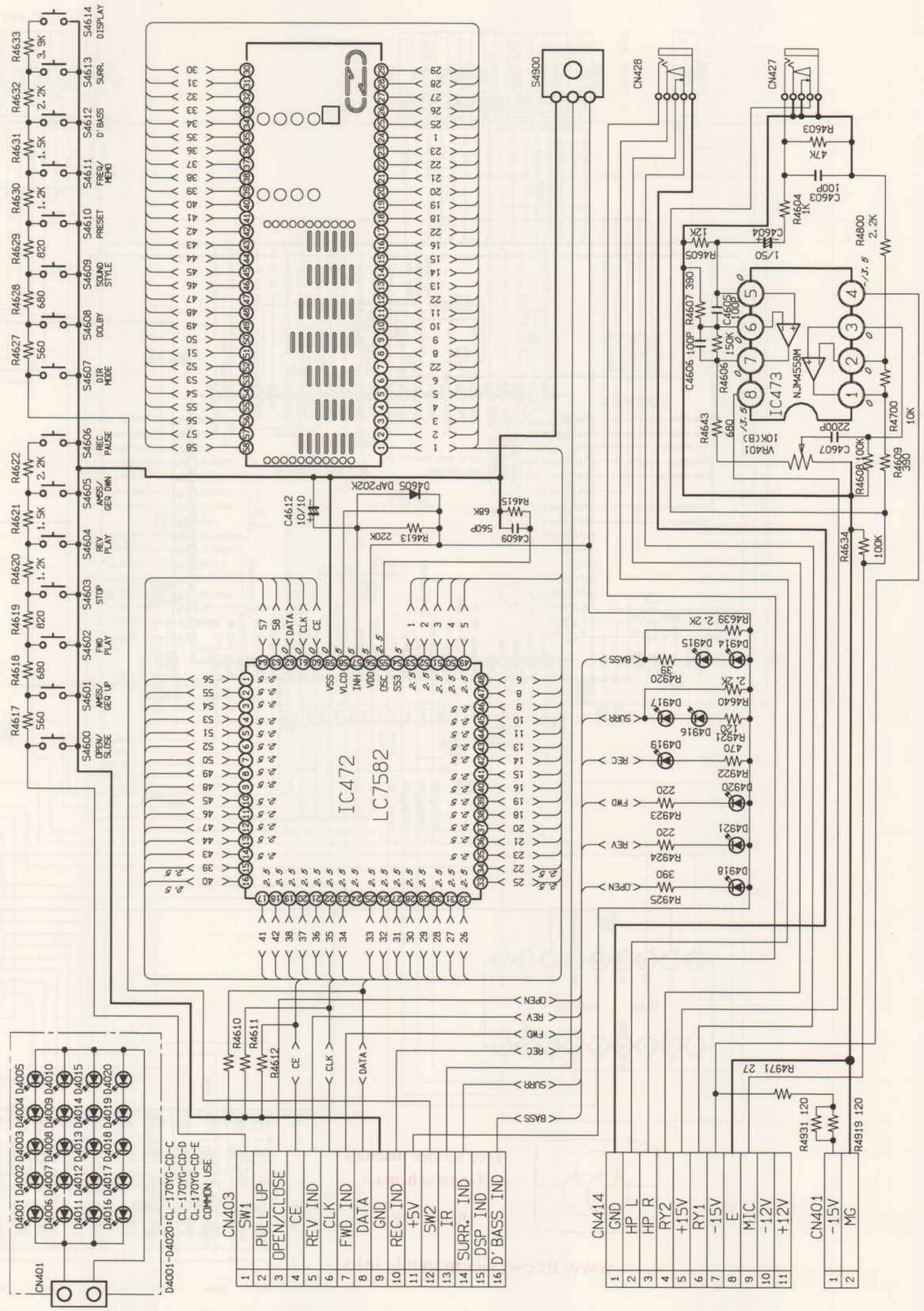

SCHEMATIC DIAGRAM (SYSCON)

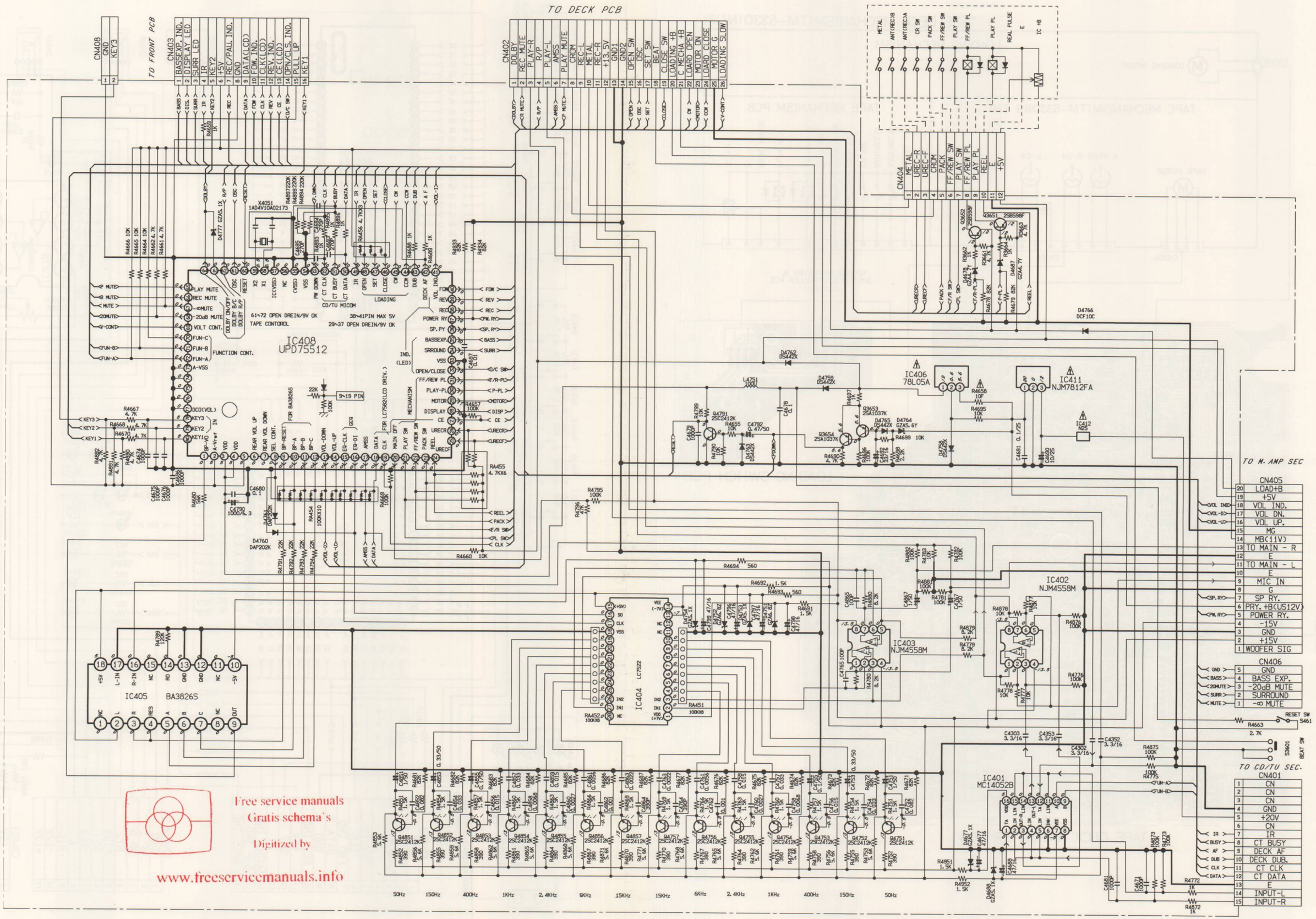

WIRING DIAGRAM (SYSCON & FRONT)

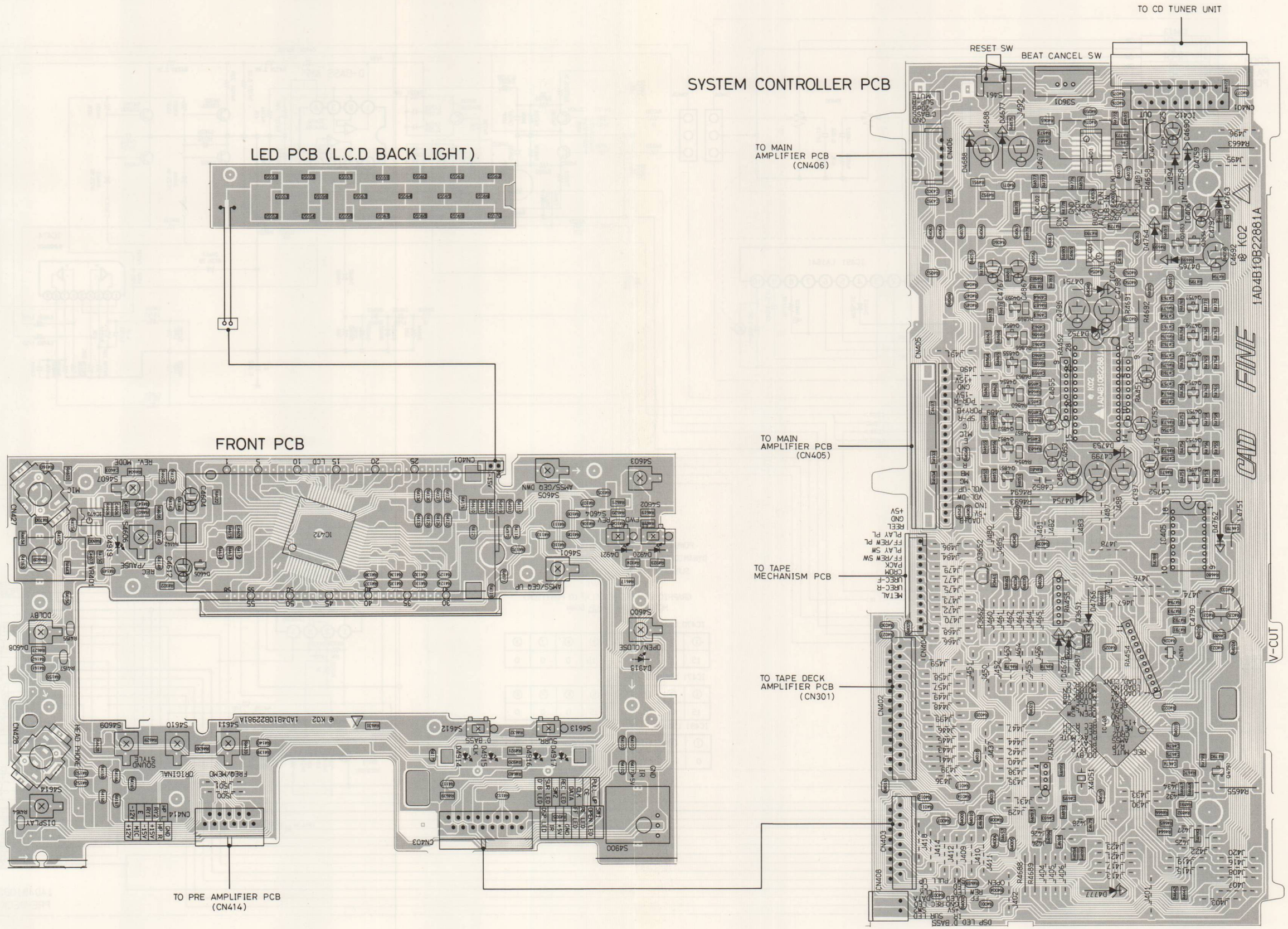

SCHEMATIC DIAGRAM (PRE & MAIN AMPLIFIER)

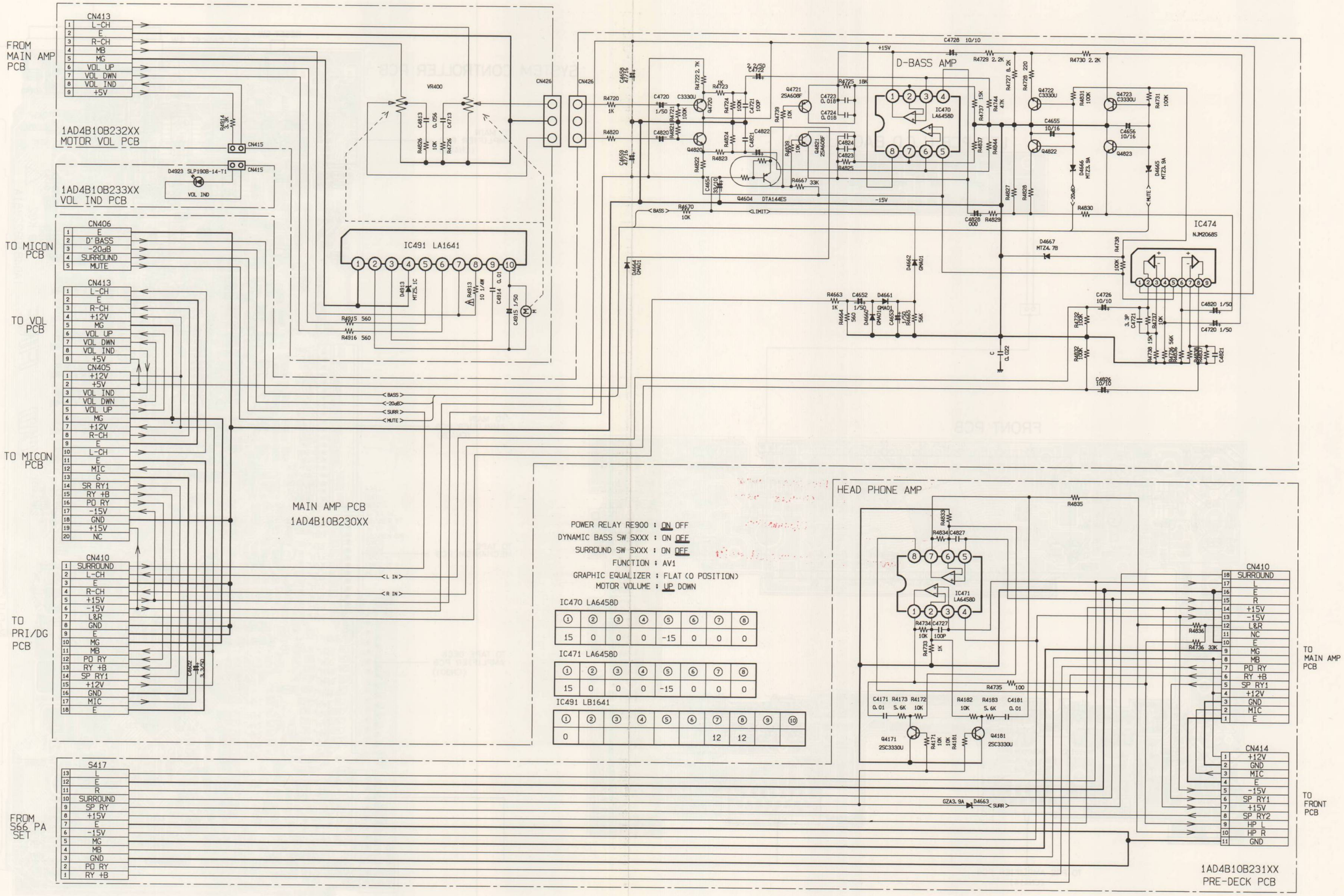

WIRING DIAGRAM (PRE & MAIN AMPLIFIER)

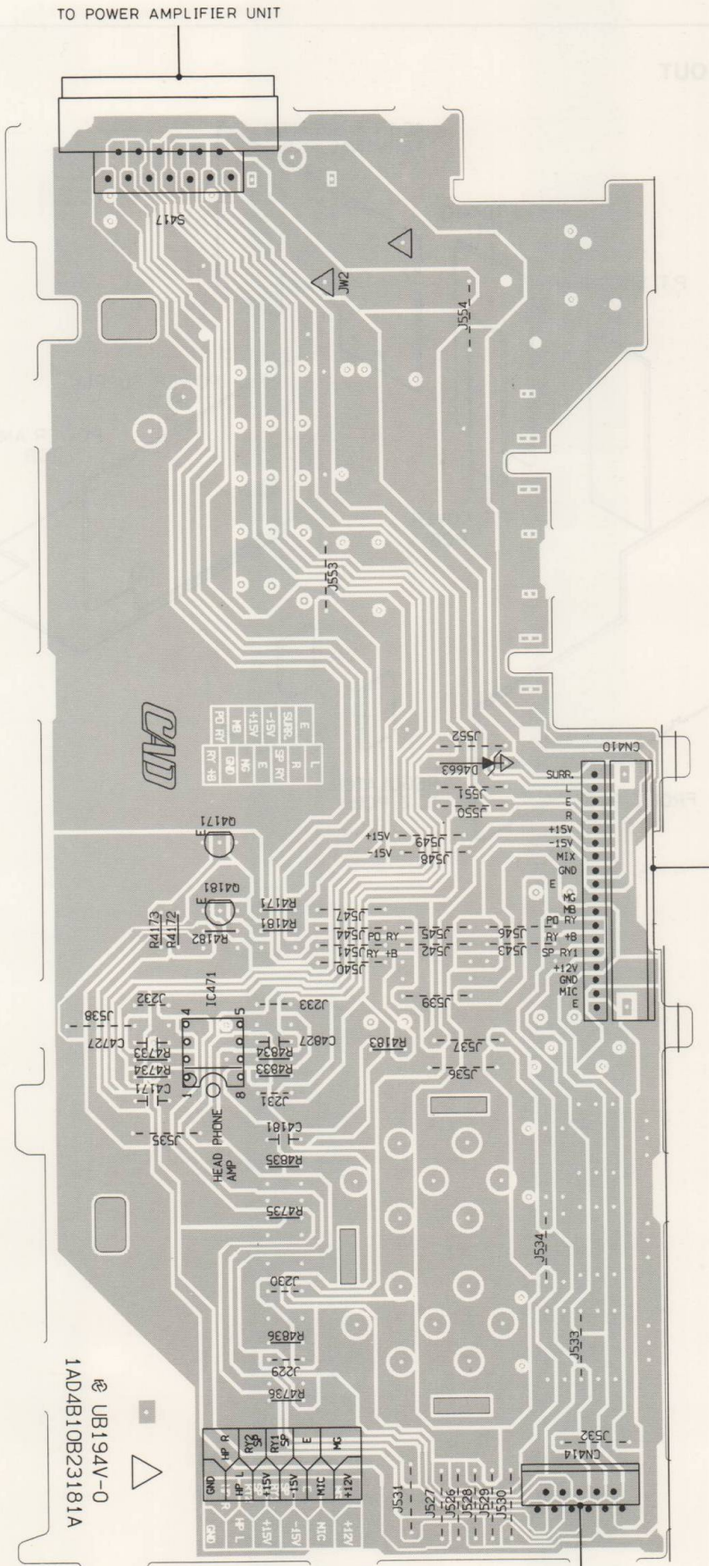

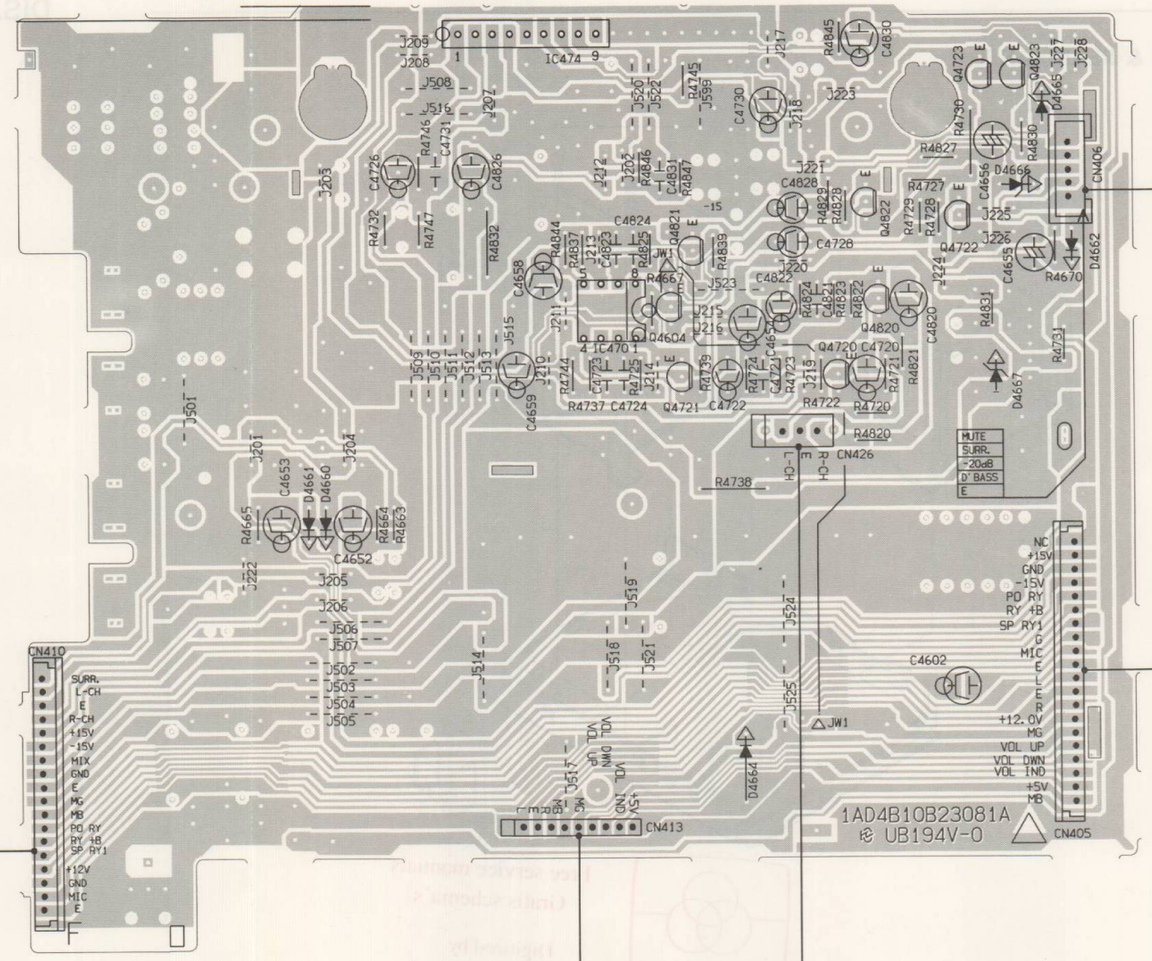

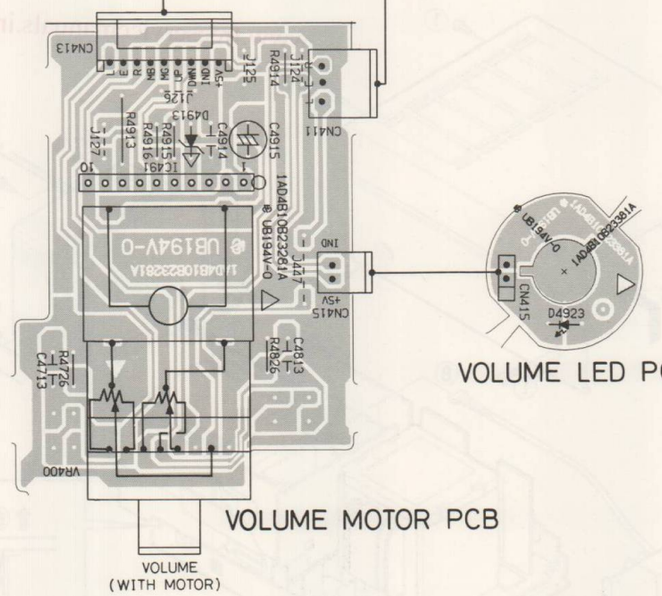

POWER-AMPLIFIER UNIT

DISASSEMBLY

1. CABINET, FRONT & REAR PANEL

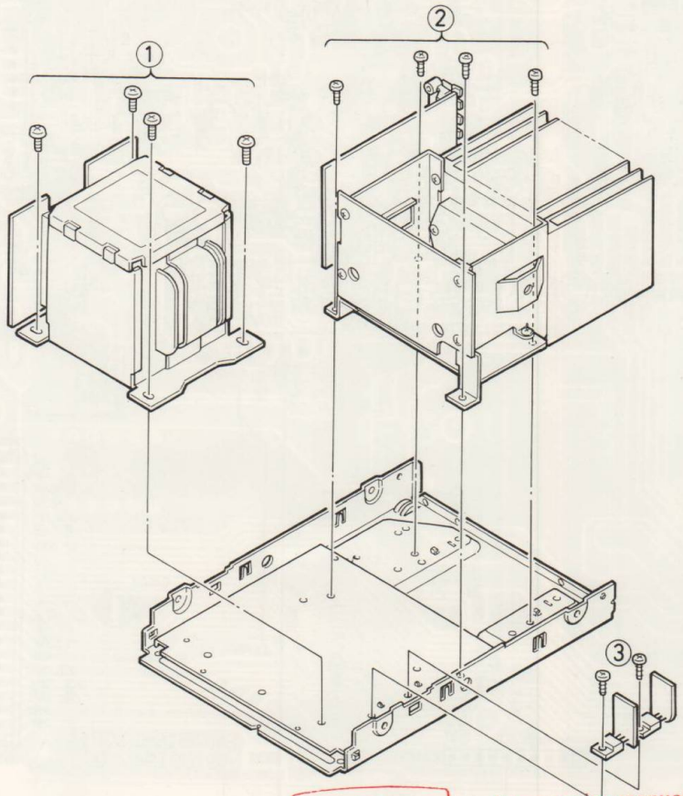

2. P. C. BOARD

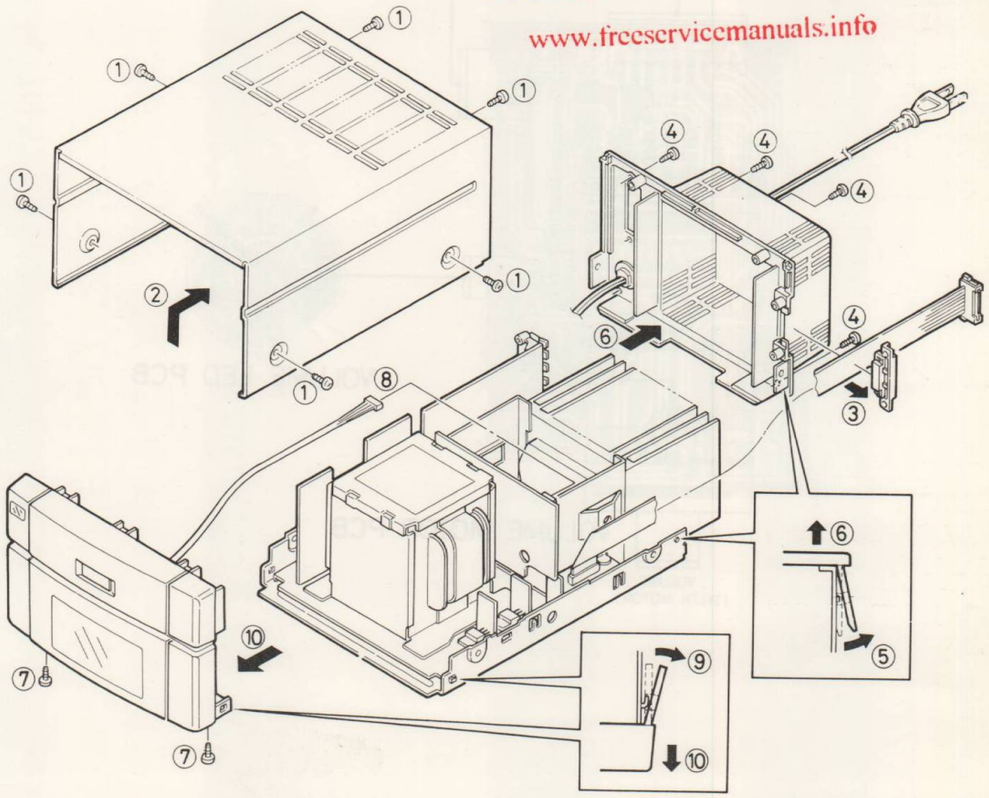

DISASSEMBLY

3. P. C. BOARD LAYOUT

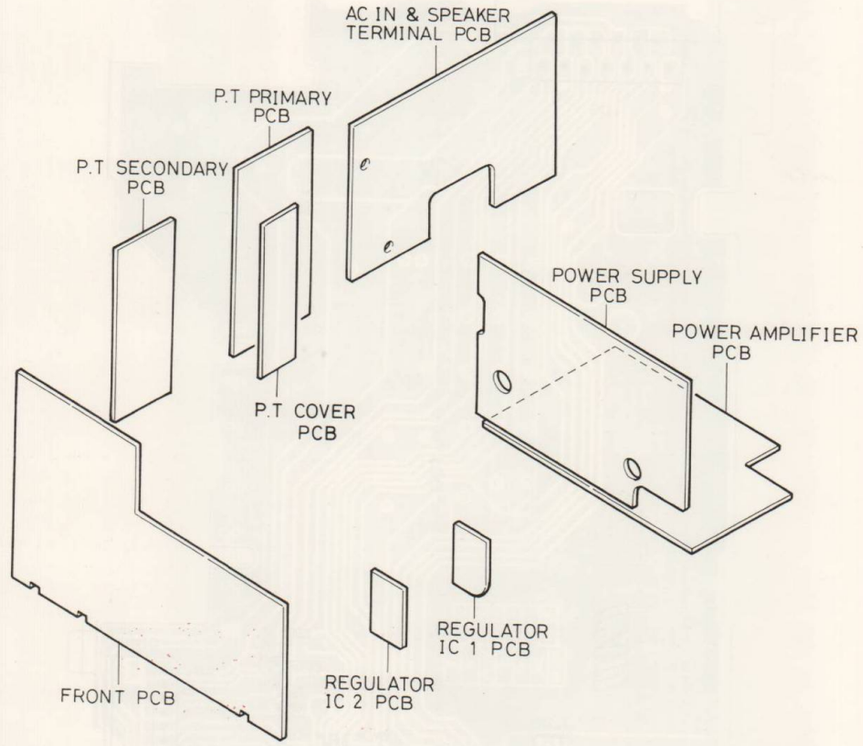

EXPLODED VIEW (POWER-AMPLIFIER UNIT)

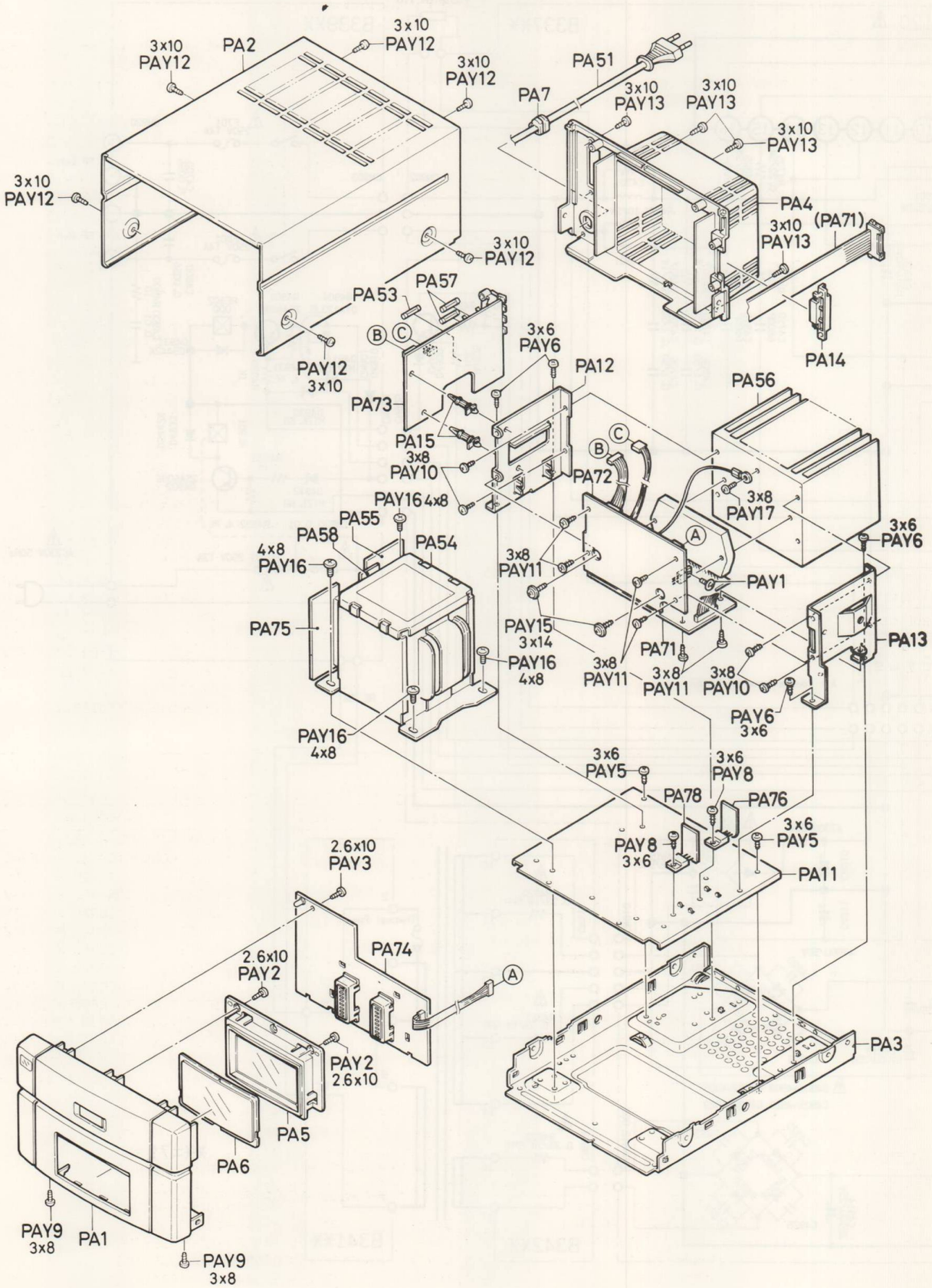

PARTS LIST (POWER-AMPLIFIER UNIT)

PRODUCT SAFETY NOTICE

Each precaution in this manual should be followed during servicing. Components identified with the IEC symbol ⚠ in the parts list and the schematic diagram designate components in which safety can be of special significance. When replacing a component identified ⚠, use only the replacement parts designated, or parts with the same ratings of resistance, wattage or voltage that are designated in the parts list in this manual. Leakage-current or resistance measurements must be made to determine that exposed parts are acceptably insulated from the supply circuit before returning the product to the customer.

CAUTION: Regular type resistors and capacitors are not listed. To know those values, refer to the schematic diagram.

CABINET

Ref. No.	Part No.	Description
PA1	4822 426 51594	ASSY,PANEL,FRONT
PA2		ASSY,CABINET,TOP
PA3		CABINET,BOTTOM
PA4	4822 426 10045	ASSY,PANEL,REAR
PA5	4822 454 30473	ASSY,ESCUTCHEON
PA6	4822 450 61974	WINDOW,POWER METER
PA7	⚠4822 532 61205	FIXER,AC CORD

CHASSIS

Ref. No.	Part No.	Description
PA11		BRACKET-E,POWER TRANS.FIX
PA12		BRACKET-E,HEAT SINK FIX (L)
PA13		BRACKET-E,HEAT SINK FIX (R)
PA14		COVER,LEAD WIRE FIX
PA15		FIXER,PCB FIX

FIXING PARTS

Ref. No.	Part No.	Description
PAY1		SCR S-TPC BIN 2.6X6, REGULATER IC FIX
PAY2		SCR S-TPG BIN 2.6X10, ESCUTHEON FIX
PAY3		SCR S-TPG BIN 2.6X10, FRONT+PCB FIX
PAY5		SCR S-TPG BIN 3X6, BOTTOM+BRACKET(TRANS) FIX
PAY6		SCR S-TPG BIN 3X6, BOTTOM+BRACKET(H.SINK) FIX
PAY8		SCR S-TPG BIN 3X6, BOTTOM+REGULATER IC PCB FIX
PAY9		SCR S-TPG BIN 3X8, BOTTOM+FRONT FIX
PAY10		SCR S-TPG BIN 3X8, HEAT SINK+BRACKET-E FIX
PAY11		SCR S-TPG BIN 3X8, HEAT SINK BRACKET+PCB FIX
PAY12		SCR S-TPG BIN 3X10, CABINET FIX
PAY13		SCR S-TPG BIN 3X10, REAR PANEL FIX
PAY15	4822 502 13783	SCR S-TPG BRZ+FLG 3X14, POWER IC FIX
PAY16		SCR S-TPG BIN 4X8, POWER TRANSFORMER FIX
PAY17		SCR S-TPG BIN 3X8, POZISTOR FIX

ELECTRICAL PARTS

Ref. No.	Part No.	Description
PA51	⚠	POWER CORD,AC-IN
PA53	⚠4822 070 32002	FUSE 250V 2A,FU901
PA54	⚠4822 146 21694	POWER TRANSFORMER
PA55	⚠	PCB, PT 1
PA56	⚠	HEAT SINK
PA57	⚠4822 253 30412	FUSE 250V 4A,FU701·801
PA58	⚠	PCB, PT COVER

POWER AMPLIFIER P.C.BOARD ASSY

Ref. No.	Part No.	Description
PA71		ASSY,PCB,POWER AMP 1
	4822 321 61786	ASSY,CONNECTOR-S,13P, DECK/PRE-AMP UNIT
		ASSY,CONNECTOR-S,4P, SPEAKER
C4705		POLYESTER 0.1U M 50V
C4706		POLYESTER 0.1U M 50V
C4805		POLYESTER 0.1U M 50V
C4806		POLYESTER 0.1U M 50V
CN901	4822 267 51179	SOCKET,13P, TO DECK/PRE-AMP UNIT
CN902		SOCKET,3P, TO SPEAKER TERMINAL PCB
IC901	⚠4822 209 31844	IC STK401-120
L4701	4822 153 70056	V.H.F COIL
L4801	4822 153 70056	V.H.F COIL
Q4701	4822 130 60754	TR 2SC3331-U
Q4801	4822 130 60754	TR 2SC3331-U
R4705		RESISTOR 0.22 K- 5W
R4706	4822 053 10109	OXIDE-MT 10 JA 1W
R4707	4822 117 10061	OXIDE-MT 5.6 JA 1W
R4805		RESISTOR 0.22 K- 5W
R4806	4822 053 10109	OXIDE-MT 10 JA 1W
R4807	4822 117 10061	OXIDE-MT 5.6 JA 1W
R4901	⚠4822 111 50606	CARBON 100 JB 1/2W
R4902	⚠4822 111 50606	CARBON 100 JB 1/2W
P001	4822 126 90003	POZISTER PTH9M04BC471TS2F333

POWER SUPPLY P.C.BOARD ASSY

Ref. No.	Part No.	Description
PA72		ASSY,PCB,POWER AMP 2
		ASSY,CONNECTOR-S,6P,CN905
C4910		ELECT 4700U M 50V
C4911		ELECT 4700U M 50V
C4912		ELECT 1000U M 35V
C4913		ELECT 1000U M 35V
C4914		ELECT 2200U M 25V
C4915	4822 121 70221	POLYPRO 0.022U M 200V
C4916	4822 121 70221	POLYPRO 0.022U M 200V
CN908		SOCKET,3P,TO REGULATOR IC 1
CN910		SOCKET,5P,TO P.T SECONDARY
CN912		SOCKET,2P,TO P.T SECONDARY
CN914		SOCKET,3P,TO REGULATOR IC 2
CN916		PLUG,5P,TO METER(FRONT PCB)
D4900	4822 130 82633	DIODE GMA01
D4901	⚠4822 130 81708	DIODE RBV-602LF-A
D4902	⚠4822 130 32508	DIODE DSF10C
D4903	⚠4822 130 32508	DIODE DSF10C
D4904	⚠4822 130 32508	DIODE DSF10C
D4905	⚠4822 130 32508	DIODE DSF10C
D4906	⚠4822 130 32508	DIODE DSF10C
D4907	⚠4822 130 32508	DIODE DSF10C
D4908	⚠4822 130 32508	DIODE DSF10C
D4909	⚠4822 130 32508	DIODE DSF10C
IC903	⚠4822 209 31864	IC AN7915F
Q4903	4822 130 60754	TR 2SC3331-U

SCHEMATIC DIAGRAM (POWER AMPLIFIER)

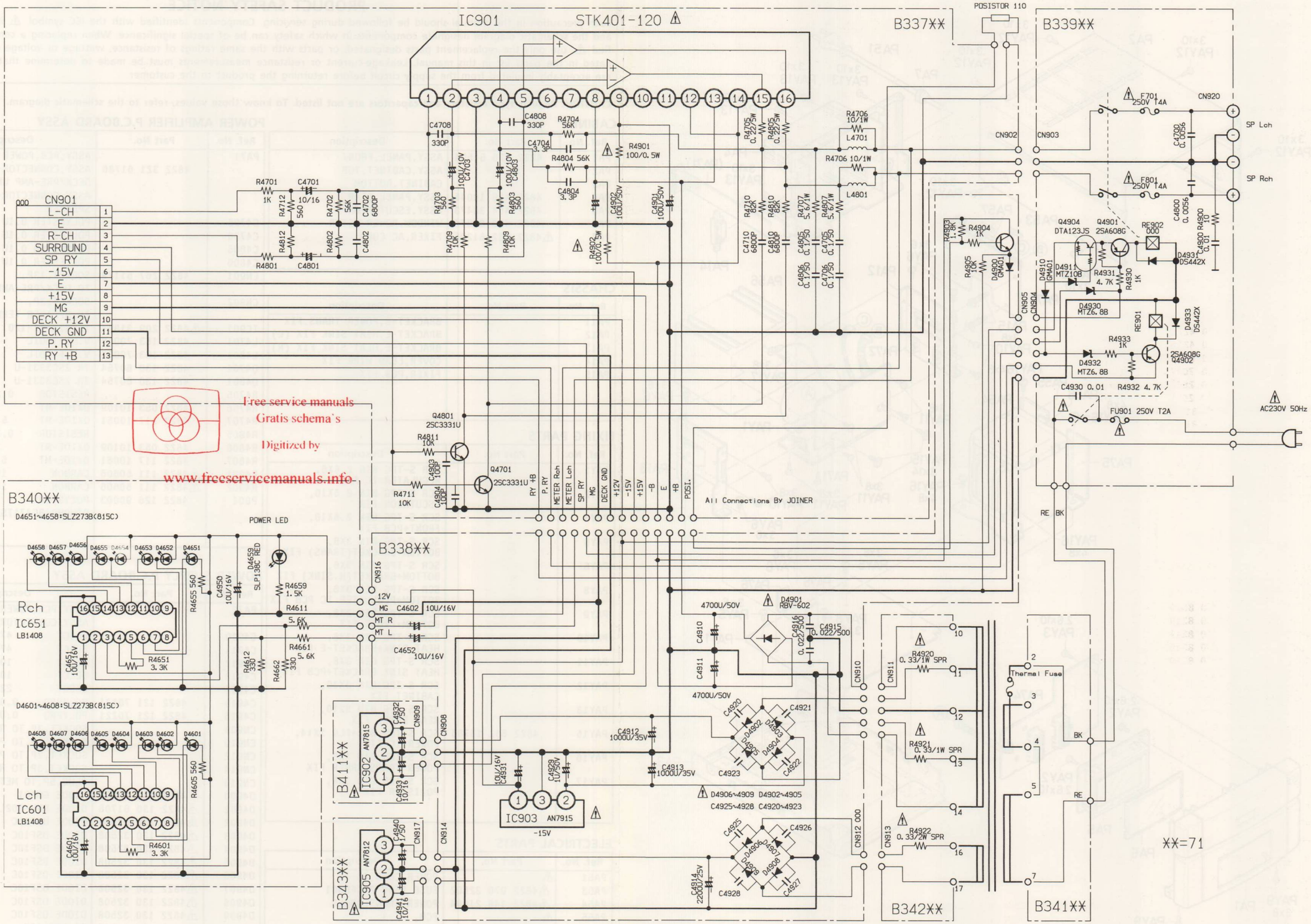

WIRING DIAGRAM (POWER AMPLIFIER)

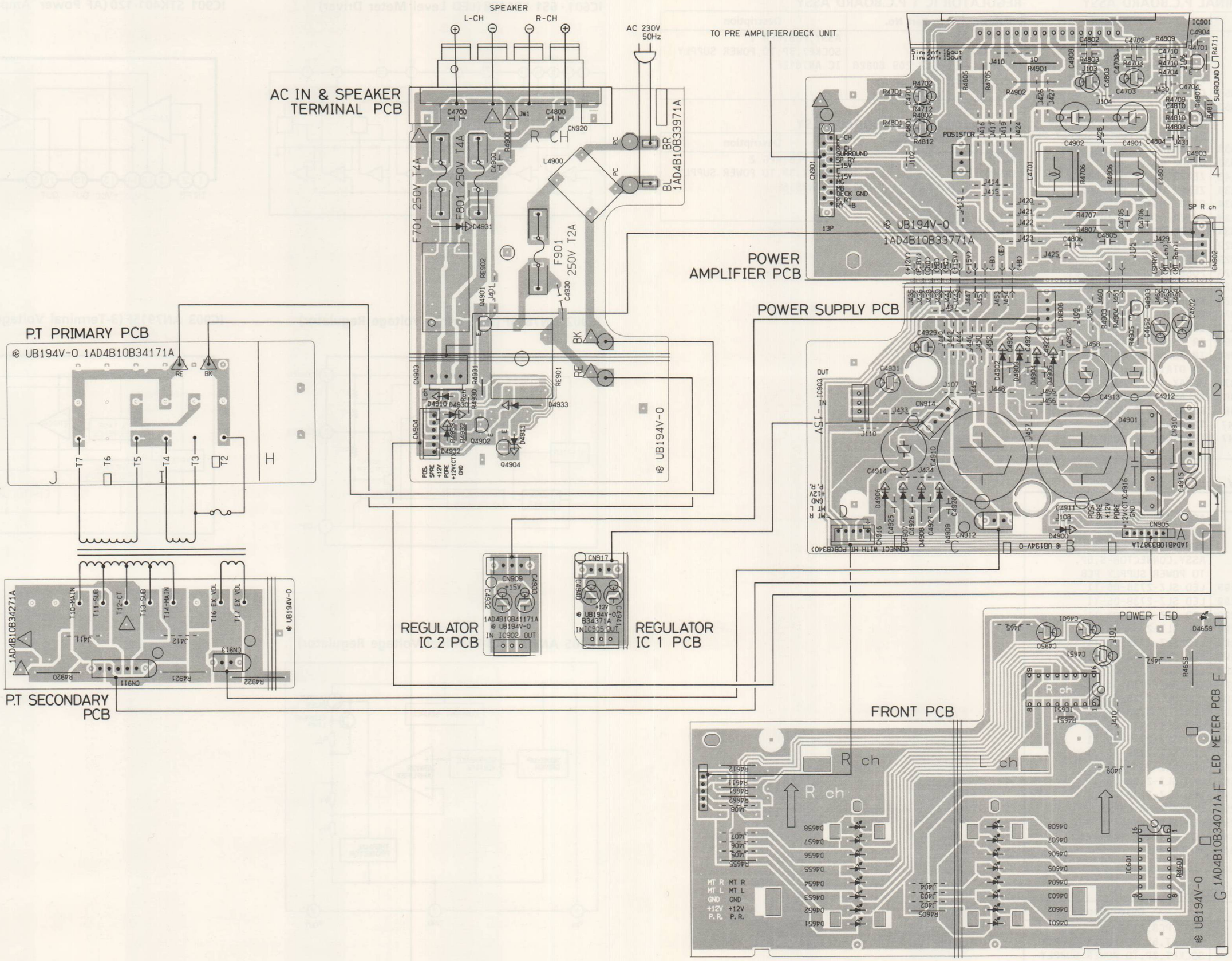

PARTS LIST (POWER-AMPLIFIER UNIT)

AC-IN & SPEAKER TERMINAL P.C.BOARD ASSY

Ref. No.	Part No.	Description
PA73		ASSY,PCB,AC
		LUG,EARTH
C4700		POLYESTER 5600P M 50V
C4800		POLYESTER 5600P M 50V
C4930	⚠4822 126 12453	CERAMIC 0.01U Z -
or	⚠4822 126 12453	CERAMIC 0.01U F 400V
CN903		PLUG,3P,TO POWER AMP PCB
CN904		PLUG,6P,TO POWER SUPPLY PCB
CN920	4822 290 81538	TERMINAL,4P,SPEAKER
D4910	4822 130 82633	DIODE GMA01
D4911	4822 130 83143	ZENER DIODE MTZ10B
D4930	4822 130 83134	ZENER DIODE MTZ6.8B
D4931	4822 130 82634	DIODE DS442X
D4932	4822 130 83134	ZENER DIODE MTZ6.8B
D4933	4822 130 82634	DIODE DS442X
FCP01	⚠4822 256 30329	FUSE HOLDER,FOR FU901
FCP02	⚠4822 256 30329	FUSE HOLDER,FOR FU901
FCP03	⚠4822 256 30329	FUSE HOLDER,FOR FU701
FCP04	⚠4822 256 30329	FUSE HOLDER,FOR FU701
FCP05	⚠4822 256 30329	FUSE HOLDER,FOR FU801
FCP06	⚠4822 256 30329	FUSE HOLDER,FOR FU801
L4900	⚠4822 158 10874	INDUCTOR,FERITE,AC LINE
Q4901	4822 130 42268	TR 2SA608-G-NP
Q4902	4822 130 42268	TR 2SA608-G-NP
Q4904	4822 130 63179	TR DTA123JS
RE901	⚠4822 280 70375	RELAY,12V,1-MAKE,POWER
RE902	4822 280 20487	RELAY,12V,2-MAKE,SPEAKER
or	4822 280 20487	RELAY,12V,2-MAKE,SPEAKER
T001	⚠4822 290 81547	TERMINAL,AC CORD
T002	⚠4822 290 81547	TERMINAL,AC CORD

FRONT P.C.BOARD ASSY

Ref. No.	Part No.	Description
PA74		ASSY,PCB,METER
		MOUNT-E,FOR LED
		MOUNT-E,FOR LED
		ASSY,CONNECTOR-S,5P,
		TO POWER SUPPLY PCB
D4601	4822 130 83199	LED SLZ-273B-05-T1
D4602	4822 130 83199	LED SLZ-273B-05-T1
D4603	4822 130 83199	LED SLZ-273B-05-T1
D4604	4822 130 83199	LED SLZ-273B-05-T1
D4605	4822 130 83199	LED SLZ-273B-05-T1
D4606	4822 130 83199	LED SLZ-273B-05-T1
D4607	4822 130 83199	LED SLZ-273B-05-T1
D4608	4822 130 83199	LED SLZ-273B-05-T1
D4651	4822 130 83199	LED SLZ-273B-05-T1
D4652	4822 130 83199	LED SLZ-273B-05-T1
D4653	4822 130 83199	LED SLZ-273B-05-T1
D4654	4822 130 83199	LED SLZ-273B-05-T1
D4655	4822 130 83199	LED SLZ-273B-05-T1
D4656	4822 130 83199	LED SLZ-273B-05-T1
D4657	4822 130 83199	LED SLZ-273B-05-T1
D4658	4822 130 83199	LED SLZ-273B-05-T1
D4659	4822 130 83257	LED SLP-56VC3F-M
or	4822 130 83257	LED SLR-56VC3F-N
IC601	4822 209 31845	IC LB1408
IC651	4822 209 31845	IC LB1408

P.T SECONDARY P.C.BOARD ASSY

Ref. No.	Part No.	Description
PA75		ASSY,PCB,PT 2
CN911		SOCKET,5P,TO POWER SUPPLY
CN913		SOCKET,2P,TO POWER SUPPLY
R4920	⚠	RESISTOR 0.33 J- 1W
R4921	⚠	RESISTOR 0.33 J- 1W
R4922	⚠	RESISTOR 0.33 J- 2W

REGULATOR IC 1 P.C.BOARD ASSY

Ref. No.	Part No.	Description
PA76		ASSY,PCB,REG 1
CN917		SOCKET,3P,TO POWER SUPPLY
IC905	⚠4822 209 60826	IC AN7812F

REGULATOR IC 2 P.C.BOARD ASSY

Ref. No.	Part No.	Description
PA78		ASSY,PCB,REG 2
CN909		SOCKET,3P,TO POWER SUPPLY
IC902	⚠4822 209 61848	IC AN7815F

IC BLOCK DIAGRAM (POWER AMPLIFIER)

IC601 · 651 LB1408 (LED Level Meter Driver)

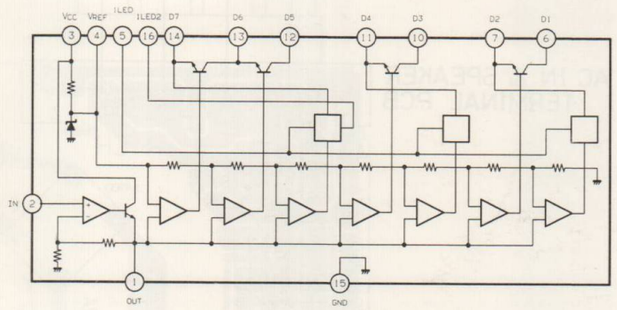

IC901 STK401-120 (AF Power Amplifier)

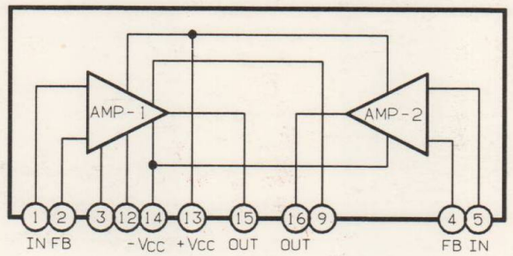

IC902 AN7815F (3-Terminal Voltage Regulator)

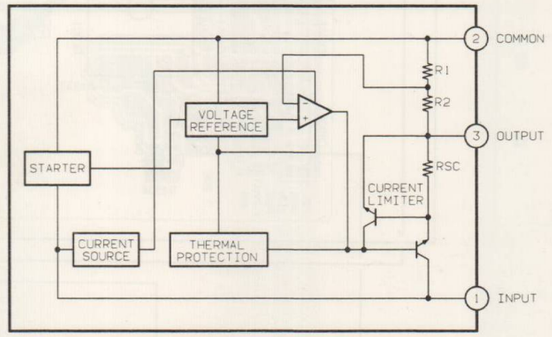

IC903 AN7915F (3-Terminal Voltage Regulator)

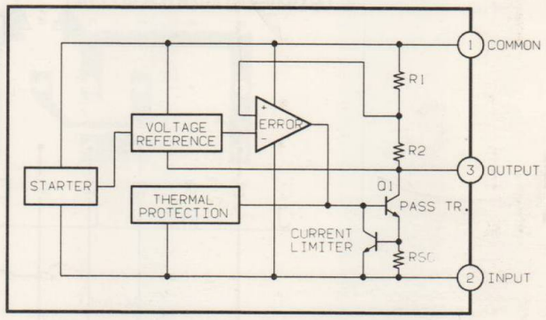

IC905 AN7812F (3-Terminal Voltage Regulator)