marantz®

This is a custom vector drawing based on Marantz original schematics, made by my own. The size is ISO A2 (594x420 mm) but may be scaled to any size for printing and/or viewing. Mrki, AK member

SCHEMATIC DIAGRAM FOR Model PM-330

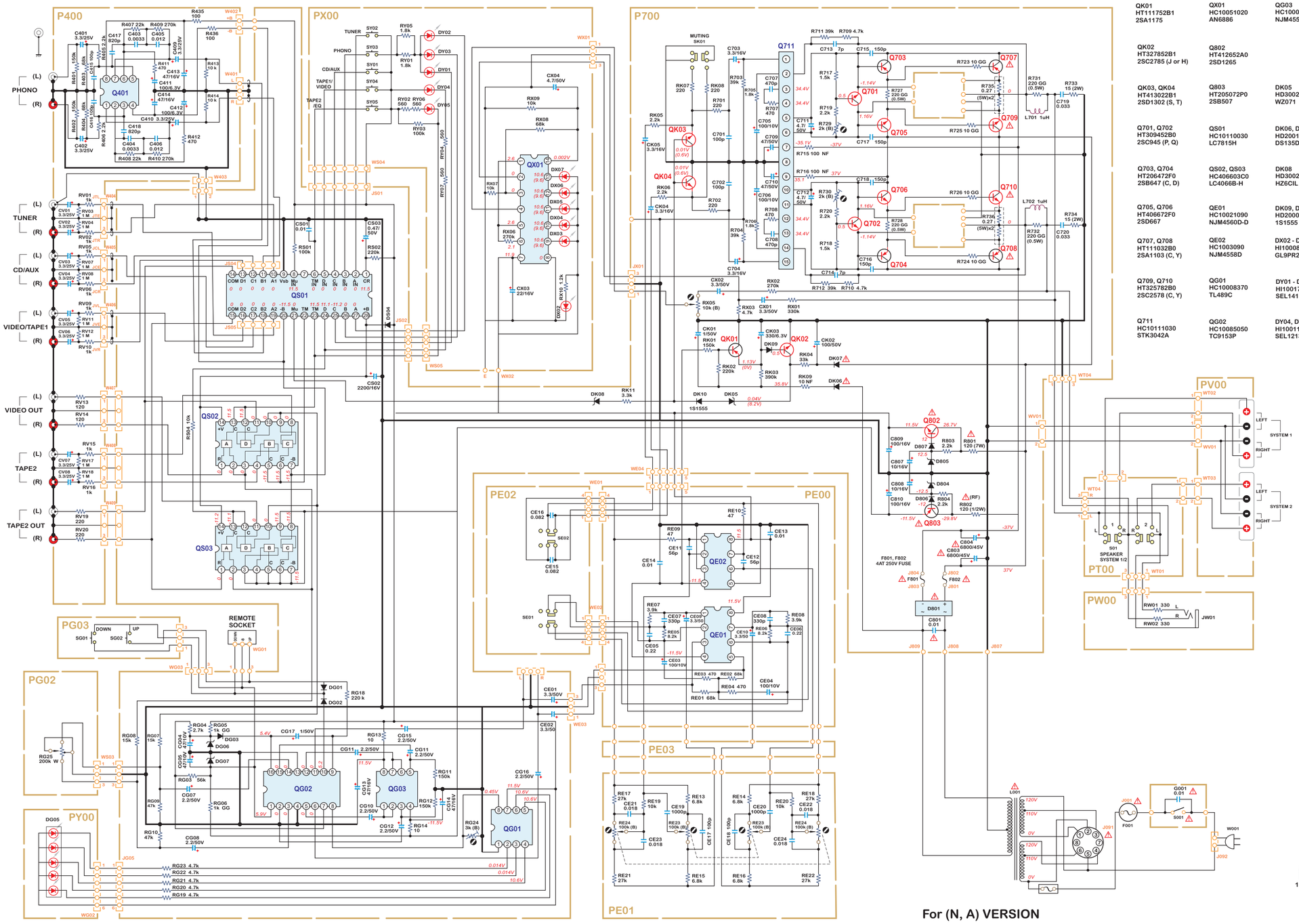

For (N, A) VERSION

QK01 HT111752B1 2SA1175	QX01 HC10051020 AN6886	QG03 HC10008090 NJM4558 DD	D801 HD20008290 S4VB20
QK02 HT327852B1 2SC2785 (J or H)	Q802 HT412652A0 2SD1265		D804, D805 HD30009011 HZ12A2L
QK03, QK04 HT413022B1 2SD1302 (S, T)	Q803 HT205072P0 2SB507	DK05 HD30023090 WZ071	DS04, DG01 - DG03 HD20001001 1S1555
Q701, Q702 HT309452B0 2SC945 (P, Q)	QS01 HC10110030 LC7815H	DK06, DK07 HD20015030 DS135D	DS05 HI10804050 TLR205-5
Q703, Q704 HT206472F0 2SB647 (C, D)	QS02, QS03 HC406603C0 LC4066B-H	DK08 HD30023011 HZ6CIL	DG06, DG07 HD30023011 HZ6CIL
Q705, Q706 HT406672F0 2SD667	QE01 HC10021090 NJM4560D-D	DK09, DK10 HD20001001 1S1555	D806, D807 HD20002210 1S2472 (GREEN)
Q707, Q708 HT111032B0 2SA1103 (C, Y)	QE02 HC1003090 NJM4558D	DX02 - DX07 HI10008320 GL9PR2	
Q709, Q710 HT325782B0 2SC2578 (C, Y)	QG01 HC10008370 TL489C	DY01 - DY03 HI10017080 SEL1413E	
Q711 HC10111030 STK3042A	QG02 HC10085050 TC9153P	DY04, DY05 HI10011080 SEL1213C	

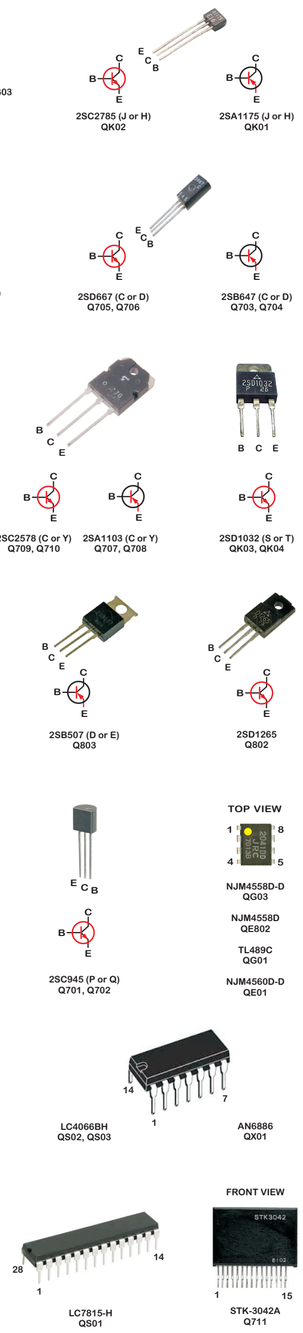

NOTE ON SAFETY :
Symbol ⚠ Fire or electrical shock hazard. Only original parts should be used to replace any part marked with symbol ⚠ Any other component substitution (other than original type), may increase risk of fire or electrical shock hazard.

Components and wiring are subject to change for modification without notice.