Service Manual

SR8001 /N1B/N1G/N1S/U1B

AV Surround Receiver

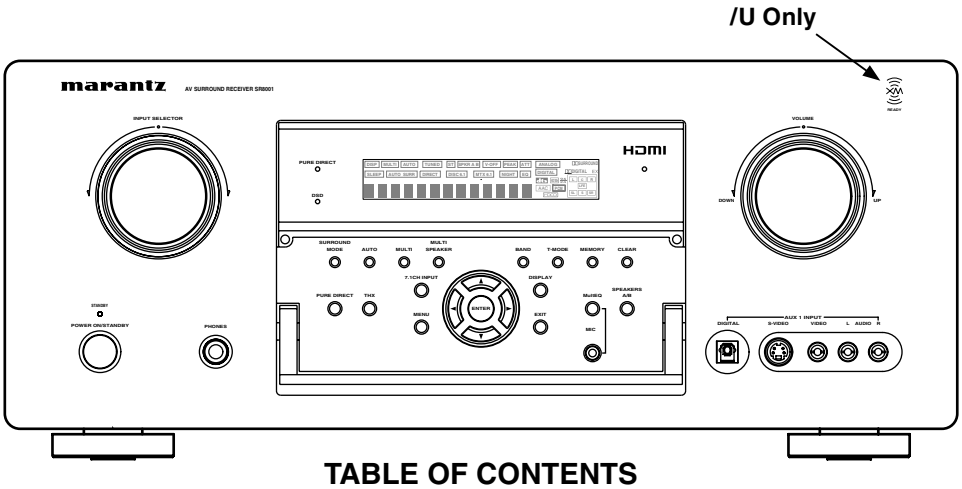

TABLE OF CONTENTS

Please use this service manual with referring to the user guide (D.F.U.) without fail.
修理の際は、必ず取扱説明書を準備し操作方法を確認の上作業を行ってください。

marantz®

SR8001

Part no. 90M06CW855010
First Issue 2006.08
MZ

SR8001

MARANTZ DESIGN AND SERVICE

Using superior design and selected high grade components, **MARANTZ** company has created the ultimate in stereo sound. Only original **MARANTZ** parts can insure that your **MARANTZ** product will continue to perform to the specifications for which it is famous.

Parts for your **MARANTZ** equipment are generally available to our National Marantz Subsidiary or Agent.

ORDERING PARTS :

Parts can be ordered either by mail or by Fax.. In both cases, the correct part number has to be specified.

The following information must be supplied to eliminate delays in processing your order :

1. Complete address
2. Complete part numbers and quantities required
3. Description of parts
4. Model number for which part is required
5. Way of shipment
6. Signature : any order form or Fax. must be signed, otherwise such part order will be considered as null and void.

USA

MARANTZ AMERICA, INC
100 CORPORATE DRIVE
MAHWAH, NEW JERSEY 07430
USA

EUROPE / TRADING

MARANTZ EUROPE B.V.
P. O. BOX 8744, BUILDING SILVERPOINT
BEEMDSTRAAT 11, 5653 MA EINDHOVEN
THE NETHERLANDS
PHONE : +31 - 40 - 2507844
FAX : +31 - 40 - 2507860

CANADA

MARANTZ CANADA INC.
5-505 APPLE CREEK BLVD.
MARKHAM, ONTARIO L3R 5B1
CANADA
PHONE : 905 - 415 - 9292
FAX : 905 - 475 - 4159

AUSTRALIA

QualiFi Pty Ltd,
24 LIONEL ROAD,
MT. WAVERLEY VIC 3149
AUSTRALIA
PHONE : +61 - (0)3 - 9543 - 1522
FAX : +61 - (0)3 - 9543 - 3677

THAILAND

MRZ STANDARD CO., LTD
746 - 754 MAHACHAI ROAD.,
WANGBURAPAPIROM, PHRANAKORN,
BANGKOK, 10200 THAILAND
PHONE : +66 - 2 - 222 9181
FAX : +66 - 2 - 224 6795

SINGAPORE

WO KEE HONG DISTRIBUTION PTE LTD
No.1 JALAN KILANG TIMOR
#08-03 PACIFIC TECH CENTRE
SINGAPORE 159303
PHONE : +65 6376 0338
FAX : +65 6376 0166

NEW ZEALAND

WILDASH AUDIO SYSTEMS NZ
14 MALVERN ROAD MT ALBERT
AUCKLAND NEW ZEALAND
PHONE : +64 - 9 - 8451958
FAX : +64 - 9 - 8463554

TAIWAN

PAI- YUING CO., LTD.
6 TH FL NO, 148 SUNG KIANG ROAD,
TAIPEI, 10429, TAIWAN R.O.C.
PHONE : +886 - 2 - 25221304
FAX : +886 - 2 - 25630415

MALAYSIA

WO KEE HONG ELECTRONICS SDN. BHD.
2ND FLOOR BANGUNAN INFINITE CENTRE
LOT 1, JALAN 13/6, 46200 PETALING JAYA
SELANGOR DARUL EHSAN, MALAYSIA
PHONE : +60 - 3 - 7954 8088
FAX : +60 - 3 - 7954 7088

JAPAN

D&M Holdings Inc.
D&M BUILDING, 2-1 NISSHIN-CHO,
KAWASAKI-KU, KAWASAKI-SHI,
KANAGAWA, 210-8569 JAPAN

株式会社 ディーアンドエムホールディングス

本 社 〒210-8569
神奈川県川崎市川崎区日進町2-1 D&Mビル

KOREA

MARANTZ KOREA CO., LTD.
ROOM 604, ELECTRO OFFICE, 16-58,
HANGGANG-RO 3GA, YONGSAN-KU,
SEOUL, 140-013, KOREA
PHONE : +82 - 2 - 323 - 2155
FAX : +82 - 2 - 323 - 2154

CHINA

MARANTZ SHANGHAI TRADING LTD.
ROOM.506 SHANGHAI LIGHT INDUSTRY MANSION
1578 NANJING (WEST) ROAD SHANGHAI
CHINA
TEL : 021 - 6248 - 1064
FAX : 021 - 6248 - 3565

SHOCK, FIRE HAZARD SERVICE TEST :

CAUTION : After servicing this appliance and prior to returning to customer, measure the resistance between either primary AC cord connector pins (with unit NOT connected to AC mains and its Power switch ON), and the face or Front Panel of product and controls and chassis bottom.

Any resistance measurement less than 1 Megohms should cause unit to be repaired or corrected before AC power is applied, and verified before it is return to the user/customer.

Ref. UL Standard No. 1492.

In case of difficulties, do not hesitate to contact the Technical Department at above mentioned address.

1. TECHNICAL SPECIFICATIONS

FM TUNER SECTION

Frequency Range .....87.5 - 108.0 MHz [/K /N /U]
Usable Sensitivity ..... IHF 1.8 µV/16.4 dBf
Signal to Noise Ratio.....Mono/Stereo 75/70 dB
Distortion .....Mono/Stereo 0.2/0.3 %
Stereo Separation..... 1 kHz 45 dB
Alternate Channel Selectivity ..... ± 300 kHz 60 dB
Image Rejection.....98 MHz 70 dB
Tuner Output Level .....1 kHz, ± 75 kHz Dev 800 mV

AM TUNER SECTION

Frequency Range ..... 531 - 1602 kHz [/K /N]
.....520 - 1710 kHz [/U]
Signal to Noise Ratio ..... 50 dB
Usable Sensitivity ..... Loop 400 µV
Distortion ..... 400Hz, 30 % Mod. 0.5 %
Selectivity ..... ± 20 kHz 70 dB

HDMI SECTION

Version .....1.2 [INPUT]
.....1.1 [OUTPUT]

AUDIO SECTION

Power Output (20 Hz - 20 kHz/THD=0.08%)
Front L&R ..... 8 ohms 125 W / Ch
Center..... 8 ohms 125 W / Ch
Surround L&R..... 8 ohms 125 W / Ch
Surround Back L&R..... 8 ohms 125 W / Ch

Front L&R ..... 6 ohms 160 W / Ch
Center..... 6 ohms 160 W / Ch
Surround L&R..... 6 ohms 160 W / Ch
Surround Back L&R..... 6 ohms 160 W / Ch

Input Sensitivity/Impedance.....168 mV/ 47 kohms
Signal to Noise Ratio
(Analog Input / Pure Direct) ..... 105 dB
Frequency Response
(Analog Input / Pure Direct) ..... 8 Hz - 100 kHz (± 3 dB)
(Digital Input / 96 kHz PCM) ..... 8 Hz - 45 kHz (± 3 dB)

VIDEO SECTION

Television Format .....NTSC/PAL
Input Level/Impedance .....1 Vp-p/75 ohms
Output Level/Impedance.....1 Vp-p/75 ohms
Video Frequency Response ..... 5 Hz to 8 MHz (- 1 dB)
Video Frequency (Component) ..... 5 Hz to 80 MHz (- 1 dB)
S/N..... 60 dB

DIMENSIONS

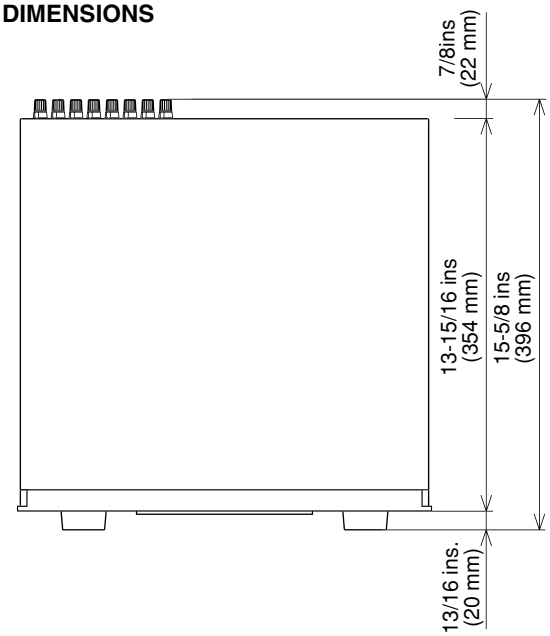

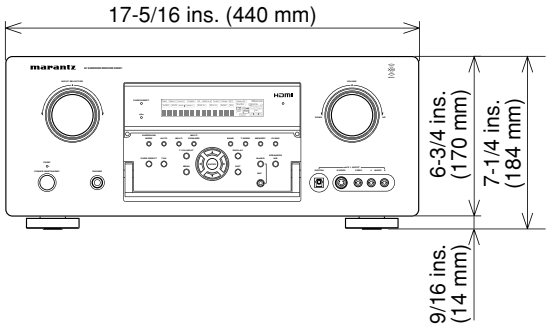

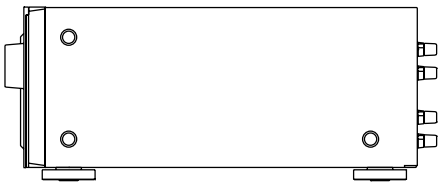

GENERAL

Power Requirement.....AC 220 V 50 Hz [/K]
.....AC 230 V 50/60 Hz [/N]
.....AC 120 V 60 Hz [/U]
Power Consumption .....790 W [/N]
.....6.5 A [/U]

Weight ..... 15.0 kg (33.1 lbs)

ACCESSORIES

Remote Control Unit RC8001SR.....1
AAA-size batteries..... 2
Microphone.....1
FM Antenna.....1
AM Loop Antenna.....1
Front AUX Jack Cover 1
AC cable 1

The relation between the selected surround mode and the input signal

The surround mode is selected with the surround mode buttons on SR7001/SR8001 or the remote control unit. However, the sound you hear is subject to the relationship between the selected surround mode and input signal. That relationship is as follows;

Surround Mode	Input Signal	Decoding	Output Channel					Front information display	
			L/R	C	SL SR	SBL SBR	SubW	Signal format indicators	Channel status
AUTO	Dolby Surr.EX	Dolby Digital EX	O	O	O	O	O	DIGITAL EX	L, C, R, SL, SR, S, LFE
	Dolby D (5.1ch)	Dolby Digital 5.1	O	O	O	-	O	DIGITAL	L, C, R, SL, SR, LFE
	Dolby D (2ch)	Dolby Digital 2.0	O	-	-	-	O	DIGITAL	L, R
	Dolby D (2ch Surr)	Pro Logic IIx movie	O	O	O	O	O	DIGITAL SURROUND	L, R, S
	DTS-ES	DTS-ES	O	O	O	O	O	dts, ES	L, C, R, SL, SR, S, LFE
	DTS 96/24	DTS-96/24	O	O	O	-	O	dts 96/24	L, C, R, SL, SR, LFE
	DTS (5.1ch)	DTS 5.1	O	O	O	-	O	dts	L, C, R, SL, SR, LFE
	Multi Ch-PCM	Multi Ch-PCM	O	O	O	-	O	M-PCM	L, C, R, SL, SR, LFE
	Multi Ch-PCM 96kHz	Multi Ch-PCM 96kHz	O	O	O	-	O	M-PCM	L, C, R, SL, SR, LFE
	SA-CD (5.1ch)	Multi Ch-PCM	O	O	O	-	O	SA-CD	L, C, R, SL, SR, LFE
	SA-CD (2ch)	PCM (Stereo)	O	-	-	-	O	SA-CD	L, R
	PCM (Audio)	PCM (Stereo)	O	-	-	-	O	PCM	L, R
	PCM 96kHz	PCM (Stereo 96kHz)	O	-	-	-	O	PCM	L, R
	HDCD	HDCD	O	-	-	-	O	PCM, HDCD	L, R
	Analog	Stereo	O	-	-	-	O	ANALOG	-
	7.1ch input	Multi Ch	O	O	O	O	O	ANALOG	-
SOURCE DIRECT PURE DIRECT	Dolby Surr.EX	Dolby Digital EX	O	O	O	O	O	DIGITAL EX	L, C, R, SL, SR, S, LFE
	Dolby D (5.1ch)	Dolby Digital 5.1	O	O	O	-	O	DIGITAL	L, C, R, SL, SR, LFE
	Dolby D (2ch)	Dolby Digital 2.0	O	-	-	-	O	DIGITAL	L, R
	Dolby D (2ch Surr)	Pro Logic IIx movie	O	O	O	O	O	DIGITAL SURROUND	L, R, S
	DTS-ES	DTS-ES	O	O	O	O	O	dts, ES	L, C, R, SL, SR, S, LFE
	DTS 96/24	DTS-96/24	O	O	O	-	O	dts 96/24	L, C, R, SL, SR, LFE
	DTS (5.1ch)	DTS 5.1	O	O	O	-	O	dts	L, C, R, SL, SR, LFE
	Multi Ch-PCM	Multi Ch-PCM	O	O	O	-	O	M-PCM	L, C, R, SL, SR, LFE
	Multi Ch-PCM 96kHz	Multi Ch-PCM 96kHz	O	O	O	-	O	M-PCM	L, C, R, SL, SR, LFE
	SA-CD (5.1ch)	SA-CD (5.1ch)	O	O	O	-	O	SA-CD	L, C, R, SL, SR, LFE
	SA-CD (2ch)	SA-CD (2ch)	O	-	-	-	O	SA-CD	L, R
	PCM (Audio)	PCM (Stereo)	O	-	-	-	-	PCM	L, R
	PCM 96kHz	PCM (Stereo 96kHz)	O	-	-	-	-	PCM	L, R
	HDCD	HDCD	O	-	-	-	-	PCM, HDCD	L, R
	Analog	Stereo	O	-	-	-	-	ANALOG	-
	7.1ch input	Multi Ch	O	O	O	O	O	ANALOG	-
EX/ES	Dolby Surr.EX	Dolby Digital EX	O	O	O	O	O	DIGITAL EX	L, C, R, SL, SR, S, LFE
	Dolby D (5.1ch)	Dolby Digital EX	O	O	O	O	O	DIGITAL	L, C, R, SL, SR, LFE
	DTS-ES	DTS-ES	O	O	O	O	O	dts, ES	L, C, R, SL, SR, S, LFE
	DTS (5.1ch)	DTS-ES	O	O	O	O	O	dts	L, C, R, SL, SR, LFE
	Multi-PCM	Multi Ch-PCM + Dolby EX	O	O	O	O	O	M-PCM	L, C, R, SL, SR, LFE
	SA-CD (5.1ch)	Multi Ch-PCM + Dolby EX	O	O	O	O	O	SA-CD	L, C, R, SL, SR, LFE
DOLBY (PLIIx movie) (PLIIx music) (PLIIx game)	Dolby Surr.EX	Dolby Digital 5.1	O	O	O	-	O	DIGITAL EX	L, C, R, SL, SR, S, LFE
	Dolby D (5.1ch)	Dolby Digital 5.1	O	O	O	-	O	DIGITAL	L, C, R, SL, SR, LFE
	Dolby D (5.1ch)	Dolby Digital 5.1 + PLIIx	O	O	O	O	O	DIGITAL	L, C, R, SL, SR, LFE
	Dolby D (2ch)	Pro Logic IIx	O	O	O	O	O	DIGITAL	L, R
	Dolby D (2ch Surr)	Pro Logic IIx	O	O	O	O	O	DIGITAL SURROUND	L, R, S
	Multi Ch-PCM	Multi Ch-PCM + PLIIx	O	O	O	O	O	M-PCM	L, C, R, SL, SR, LFE
	SA-CD (5.1ch)	Multi Ch-PCM + PLIIx	O	O	O	O	O	SA-CD	L, C, R, SL, SR, LFE
	SA-CD (2ch)	Pro Logic IIx	O	O	O	O	O	SA-CD	L, R
	PCM (Audio)	Pro Logic IIx	O	O	O	O	O	PCM	L, R
	HDCD	Pro Logic IIx	O	O	O	O	O	PCM, HDCD	L, R
	Analog	Pro Logic IIx	O	O	O	O	O	ANALOG	-
DTS (Neo:6 Cinema) (Neo:6 Music)	DTS-ES	DTS 5.1	O	O	O	-	O	dts, ES	L, C, R, SL, SR, S, LFE
	DTS 96/24	DTS-96/24	O	O	O	-	O	dts 96/24	L, C, R, SL, SR, LFE
	DTS (5.1ch)	DTS 5.1	O	O	O	-	O	dts	L, C, R, SL, SR, LFE
	Dolby D (2ch)	Neo:6	O	O	O	O	O	DIGITAL	L, R
	Dolby D (2ch Surr)	Neo:6	O	O	O	O	O	DIGITAL SURROUND	L, R, S
	SA-CD (2ch)	Neo:6	O	O	O	O	O	SA-CD	L, R
	PCM(Audio)	Neo:6	O	O	O	O	O	PCM	L, R
	HDCD	Neo:6	O	O	O	O	O	PCM, HDCD	L, R
	Analog	Neo:6	O	O	O	O	O	ANALOG	-
CSII Cinema CSII Music CSII Mono	Dolby D (2ch)	CSII	O	O	O	O	O	DIGITAL	L, R
	Dolby D (2ch Surr)	CSII	O	O	O	O	O	DIGITAL SURROUND	L, R, S
	SA-CD (2ch)	CSII	O	O	O	O	O	SA-CD	L, R
	PCM(Audio)	CSII	O	O	O	O	O	PCM	L, R
	HDCD	CSII	O	O	O	O	O	PCM, HDCD	L, R
	Analog	CSII	O	O	O	O	O	ANALOG	-
STEREO	Dolby Surr.EX	Stereo	O	-	-	-	O	DIGITAL EX	L, C, R, SL, SR, S, LFE
	Dolby D (5.1ch)	Stereo	O	-	-	-	O	DIGITAL	L, C, R, SL, SR, LFE
	Dolby D (2ch)	Stereo	O	-	-	-	O	DIGITAL	L, R
	Dolby D (2ch Surr)	Stereo	O	-	-	-	O	DIGITAL SURROUND	L, R, S
	DTS-ES	Stereo	O	-	-	-	O	dts, ES	L, C, R, SL, SR, S, LFE
	DTS 96/24	Stereo	O	-	-	-	O	dts 96/24	L, C, R, SL, SR, LFE
	DTS (5.1ch)	Stereo	O	-	-	-	O	dts	L, C, R, SL, SR, LFE
	Multi Ch-PCM	Stereo	O	-	-	-	O	M-PCM	L, C, R, SL, SR, LFE
	Multi Ch-PCM 96kHz	Stereo	O	-	-	-	O	M-PCM	L, C, R, SL, SR, LFE
	SA-CD (5.1ch)	Stereo	O	-	-	-	O	SA-CD	L, C, R, SL, SR, LFE
	SA-CD (2ch)	Stereo	O	-	-	-	O	SA-CD	L, R
	PCM (Audio)	Stereo	O	-	-	-	O	PCM	L, R
	PCM 96kHz	Stereo	O	-	-	-	O	PCM	L, R
	HDCD	Stereo	O	-	-	-	O	PCM, HDCD	L, R
	Analog	Stereo	O	-	-	-	O	ANALOG	-

Surround Mode	Input Signal	Decoding	Output Channel					Front information display	
			L/R	C	SL SR	SBL SBR	SubW	Signal format indicators	Channel status
Dolby Virtual Speaker	Dolby Surr.EX	Dolby Virtual Speaker	O	-	-	-	-	DD DIGITAL EX	L, C, R, SL, SR, S, LFE
	Dolby D (5.1ch)	Dolby Virtual Speaker	O	-	-	-	-	DD DIGITAL	L, C, R, SL, SR, LFE
	Dolby D (2ch)	Dolby Virtual Speaker	O	-	-	-	-	DD DIGITAL	L, R
	Dolby D (2ch Surr)	Dolby Virtual Speaker	O	-	-	-	-	DD DIGITAL DD SURROUND	L, R, S
	DTS-ES	Dolby Virtual Speaker	O	-	-	-	-	dts, ES	L, C, R, SL, SR, S, LFE
	DTS 96/24	Dolby Virtual Speaker	O	-	-	-	-	dts 96/24	L, C, R, SL, SR, LFE
	DTS (5.1ch)	Dolby Virtual Speaker	O	-	-	-	-	dts	L, C, R, SL, SR, LFE
	Multi Ch-PCM	Dolby Virtual Speaker	O	-	-	-	-	M-PCM	L, C, R, SL, SR, LFE
	SA-CD (5.1ch)	Dolby Virtual Speaker	O	-	-	-	-	SA-CD	L, C, R, SL, SR, LFE
	SA-CD (2ch)	Dolby Virtual Speaker	O	-	-	-	-	SA-CD	L, R
	PCM (Audio)	Dolby Virtual Speaker	O	-	-	-	-	PCM	L, R
	HDCD	Dolby Virtual Speaker	O	-	-	-	-	PCM, HDCD	L, R
	Analog	Dolby Virtual Speaker	O	-	-	-	-	ANALOG	-
Multi Ch. Stereo	Dolby Surr.EX	Dolby Digital EX	O	O	O	O	O	DD DIGITAL EX	L, C, R, SL, SR, S, LFE
	Dolby D (5.1ch)	Dolby Digital 5.1	O	O	O	-	O	DD DIGITAL	L, C, R, SL, SR, LFE
	Dolby D (2ch)	Multi Channel Stereo	O	O	O	O	O	DD DIGITAL	L, R
	Dolby D (2ch Surr)	Multi Channel Stereo	O	O	O	O	O	DD DIGITAL DD SURROUND	L, R, S
	DTS-ES	DTS-ES	O	O	O	O	O	dts, ES	L, C, R, SL, SR, S, LFE
	DTS 96/24	DTS-96/24	O	O	O	-	O	dts 96/24	L, C, R, SL, SR, LFE
	DTS (5.1ch)	DTS 5.1	O	O	O	-	O	dts	L, C, R, SL, SR, LFE
	Multi Ch-PCM	Multi Ch-PCM	O	O	O	-	O	M-PCM	L, C, R, SL, SR, LFE
	Multi Ch-PCM 96kHz	Multi Ch-PCM 96kHz	O	O	O	-	O	M-PCM	L, C, R, SL, SR, LFE
	SA-CD (5.1ch)	Multi Ch-PCM	O	O	O	-	O	SA-CD	L, C, R, SL, SR, LFE
	SA-CD (2ch)	Multi Channel Stereo	O	O	O	O	O	SA-CD	L, R
	PCM (Audio)	Multi Channel Stereo	O	O	O	O	O	PCM	L, R
	HDCD	Multi Channel Stereo	O	O	O	O	O	PCM, HDCD	L, R
	Analog	Multi Channel Stereo	O	O	O	O	O	ANALOG	-
Dolby H.P	Dolby Surr.EX	Dolby H.P	O	-	-	-	-	DD DIGITAL EX	L, C, R, SL, SR, S, LFE
	Dolby D (5.1ch)	Dolby H.P	O	-	-	-	-	DD DIGITAL	L, C, R, SL, SR, LFE
	Dolby D (2ch)	Dolby H.P	O	-	-	-	-	DD DIGITAL	L, R
	Dolby D (2ch Surr)	Dolby H.P	O	-	-	-	-	DD DIGITAL DD SURROUND	L, R, S
	DTS-ES	Dolby H.P	O	-	-	-	-	dts, ES	L, C, R, SL, SR, S, LFE
	DTS 96/24	Dolby H.P	O	-	-	-	-	dts 96/24	L, C, R, SL, SR, LFE
	DTS (5.1ch)	Dolby H.P	O	-	-	-	-	dts	L, C, R, SL, SR, LFE
	Multi Ch-PCM	Dolby H.P	O	-	-	-	-	M-PCM	L, C, R, SL, SR, LFE
	SA-CD (5.1ch)	Dolby H.P	O	-	-	-	-	SA-CD	L, C, R, SL, SR, LFE
	SA-CD (2ch)	Dolby H.P	O	-	-	-	-	SA-CD	L, R
	PCM (Audio)	Dolby H.P	O	-	-	-	-	PCM	L, R
	HDCD	Dolby H.P	O	-	-	-	-	PCM, HDCD	L, R
	Analog	Dolby H.P	O	-	-	-	-	ANALOG	-
THX (THX Games)	Dolby Surr.EX	Dolby Digital + THX Surround EX	O	O	O	O	O	DD DIGITAL EX	L, C, R, SL, SR, S, LFE
	Dolby D (5.1ch)	Dolby Digital 5.1+ THX 5.1	O	O	O	-	O	DD DIGITAL	L, C, R, SL, SR, LFE
	Dolby D (2ch)	Pro Logic IIx movie + THX	O	O	O	O	O	DD DIGITAL	L, R
	Dolby D (2ch Surr)	Pro Logic IIx movie + THX	O	O	O	O	O	DD DIGITAL DD SURROUND	L, R, S
	DTS-ES	DTS-ES + THX	O	O	O	O	O	dts, ES	L, C, R, SL, SR, S, LFE
	DTS (5.1ch)	DTS + THX 5.1	O	O	O	-	O	dts	L, C, R, SL, SR, LFE
	Multi Ch-PCM	Multi Ch-PCM + THX5.1	O	O	O	-	O	M-PCM	L, C, R, SL, SR, LFE
	SA-CD (5.1ch)	Multi Ch-PCM + THX5.1	O	O	O	-	O	SA-CD	L, C, R, SL, SR, LFE
	SA-CD (2ch)	Pro Logic IIx movie + THX	O	O	O	O	O	SA-CD	L, R
	PCM (Audio)	Pro Logic IIx movie + THX	O	O	O	O	O	PCM	L, R
	HDCD	Pro Logic IIx movie + THX	O	O	O	O	O	PCM, HDCD	L, R
	Analog	Pro Logic IIx movie + THX	O	O	O	O	O	ANALOG	-
THX Select2 (THX EX) (THX Music) (THX Games)	Dolby Surr.EX	Dolby Digital + THX Surround EX	O	O	O	O	O	DD DIGITAL EX	L, C, R, SL, SR, S, LFE
	Dolby D (5.1ch)	Dolby Digital 5.1+ THX Select2 Cinema	O	O	O	O	O	DD DIGITAL	L, C, R, SL, SR, LFE
	Dolby D (2ch)	Pro Logic IIx movie + THX	O	O	O	O	O	DD DIGITAL	L, R
	Dolby D (2ch Surr)	Pro Logic IIx movie + THX	O	O	O	O	O	DD DIGITAL DD SURROUND	L, R, S
	DTS-ES	DTS-ES + THX	O	O	O	O	O	dts, ES	L, C, R, SL, SR, S, LFE
	DTS (5.1ch)	DTS + THX Select2 Cinema	O	O	O	O	O	dts	L, C, R, SL, SR, LFE
	Multi Ch-PCM	Multi Ch-PCM + THX Select2 Cinema	O	O	O	O	O	M-PCM	L, C, R, SL, SR, LFE
	SA-CD (5.1ch)	Multi Ch-PCM + THX Select2 Cinema	O	O	O	O	O	SA-CD	L, C, R, SL, SR, LFE
	SA-CD (2ch)	Pro Logic IIx movie + THX	O	O	O	O	O	SA-CD	L, R
	PCM (Audio)	Pro Logic IIx movie + THX	O	O	O	O	O	PCM	L, R
	HDCD	Pro Logic IIx movie + THX	O	O	O	O	O	PCM, HDCD	L, R
	Analog	Pro Logic IIx movie + THX	O	O	O	O	O	ANALOG	-

Notes:

- Dolby Digital (2 channel L/R): Speakers for signal with Dolby Surround are fully equipped.
- No sound is outputs from the surround speaker, center speaker and subwoofer if the DVD disc has no surround data.

Abbreviations

L/R : Front speakers
C : Center speaker
SL/SR : Surround speakers
SBL/SBR : Surround back speakers
SubW : Subwoofer

2. TECHNICAL DESCRIPTION

DESCRIPTION

THX® is an exclusive set of standards and technologies established by the world-renowned film production company, Lucasfilm Ltd. THX resulted from George Lucas' desire to reproduce the movie soundtrack as faithfully as possible both in the movie theater and in the home theater.
THX engineers developed patented technologies to accurately translate the sound from a movie theater environment into the home, correcting the tonal and spatial errors that occur.
When the THX mode of the SR7001 is on, three distinct THX technologies are automatically added:
Re-Equalization-restores the correct tonal balance for watching a movie in a home environment.
These sounds are otherwise mixed to be brighter for a large movie theater. Re-EQ compensates for this and prevents the soundtracks from being overly bright and harsh when played in a home theater.
Timbre Matching-filters the information going to the surround speakers so they more closely match the tonal characteristics of the sound coming from the front speakers.
This ensures seamless panning between the front and surround speakers.
Adaptive Decorrelation-slightly changes one surround channel's time and phase relationship with respect to the other surround channel.
This expands the listening position and creates with only two surround speakers the same spacious surround experience as in a movie theater with multiple surround speakers.
The Marantz SR7001 was required to pass a rigorous series of quality and performance tests, in addition to incorporating the technologies explained above, in order to be THX certified by Lucasfilm Ltd.
THX requirements cover every aspect of performance including pre-amplifier and power amplifier performance and operation, and hundreds of other parameters in both the digital and analog domain.
Movies which have been encoded in Dolby Digital, DTS, Dolby Pro Logic, stereo and Mono will all benefit from the THX mode when being viewed.
The THX mode should only be activated when watching movies which were originally produced for a movie theater environment.
THX need not be activated for music, movies made especially for TV, or shows such as sports programming, talk shows, etc.
This is because they were originally mixed for a small room environment.

THX and Select 2 are trademarks of THX Ltd. THX may be registered in some jurisdictions. Surround EX is a trademark of Dolby Laboratories. Used with permission.

THX SURROUND EX

THX Surround EX—Dolby DIgital Surround EX is a joint development of Dolby Laboratories and THX Ltd.

In a movie theater, film soundtracks that have been encoded with Dolby Digital Surround EX technology are able to reproduce an extra channel which has been added during the mixing of the program. This channel, called Surround Back, places sounds behind the listener in addition to the currently available front left, front center, front right, surround right, surround left and subwoofer channels. This additional channel provides the opportunity for more detailed imaging behind the listener and brings more depth, spacious ambience and sound localization than ever before.
Movies that were created using the Dolby Digital Surround EX technology, when released into the home consumer market may exhibit wording to that effect on the packaging. A list of movies created using this technology can be found on the Dolby web site at **www.dolby.com.** A list of available DVD software titles encoded with this technology an be found at www.thx.com.
Only receiver and controller products bearing the THX Surround EX logo, when in the THX Surround EX mode, faithfully reproduce this new technology in the home. This product may also engage the THX Surround EX mode during the playback of 5.1 channel material that is not Dolby Digital Surround EX eocnded. In such case, the information delivered to the Surround Back channel will be program dependent and may or may not be very pleasing depending on the particular soundtrack and the tastes of the individual listener.

"SURROUND EX™" is a trademark of Dolby Laboratories. Used under authorization.

THX Select2

Before any home theater component can be THX Select2 certified, it must pass a rigorous series of quality and performance tests. Only then can a product feature the THX Select2 logo, which is your guarantee that the Home Theater products you purchase will give you superb performance for many years to come. THX Select2 requirements define hundreds of parameters, including power amplifier performance, and pre-amplifier performance and operation for both digital and analog domains. THX Select2 receivers also feature proprietary THX technologies
(e.g., THX Mode) which accurately translate movie soundtracks for home theater playback.

DTS was introduced in 1994 to provide 5.1 channels of discrete digital audio into home theater systems.
DTS brings you premium quality discrete multichannel digital sound to both movies and music.
DTS is a multichannel sound system designed to create full range digital sound reproduction.
The no compromise DTS digital process sets the standard of quality for cinema sound by delivering an exact copy of the studio master recordings to neighborhood and home theaters.
Now, every moviegoer can hear the sound exactly as the moviemaker intended.
DTS can be enjoyed in the home for either movies or music on of DVD's, LD's, and CD's.

"DTS" and "DTS Digital Surround" are registered trademarks of Digital Theater Systems, Inc.

The advantages of discrete multichannel systems over matrix are well known.
But even in homes equipped for discrete multichannel, there remains a need for high-quality matrix decoding. This is because of the large library of matrix surround motion pictures available on disc and on VHS tape; and analog television broadcasts.
The typical matrix decoder of today derives a center channel and a mono surround channel from two-channel matrix stereo material. It is better than a simple matrix in that it includes steering logic to improve separation, but because of its mono, band-limited surround it can be disappointing to users accustomed to discrete multichannel.

Neo:6 offers several important improvements as follow,

- Neo:6 provides up to six full-band channels of matrix decoding from stereo matrix material. Users with 6.1 and 5.1 systems will derive six and five separate channels, respectively, corresponding to the standard home-theater speaker layouts.
- Neo:6 technology allows various sound elements within a channel or channels to be steered separately, and in a way which follows naturally from the original presentation.
- Neo:6 offers a music mode to expand stereo nonmatrix recordings into the five- or six-channel layout, in a way which does not diminish the subtlety and integrity of the original stereo recording.

DTS-ES Extended Surround is a new multichannel digital signal format developed by Digital Theater Systems Inc. While offering high compatibility with the conventional DTS Digital Surround format, DTS-ES Extended Surround greatly improves the 360-degree surround impression and space expression thanks to further expanded surround signals. This format has been used professionally in movie theaters since 1999.
In addition to the 5.1 surround channels (FL, FR, C, SL, SR and LFE), DTS-ES Extended Surround also offers the SB (Surround Back) channel for surround playback with a total of 6.1 channels. DTS-ES Extended Surround includes two signal formats with different surround signal recording methods, as DTS-ES Discrete 6.1 and DTS-ES Matrix 6.1.

"DTS", "DTS-ES and "Neo:6" are trademarks of Digital Theater Systems, Inc.

The stereo CD is a 16-bit medium with sampling at 44.1 kHz. Professional audio has been 20- or 24-bit for some time, and there is increasing interest in higher sampling rates both for recording and for delivery into the home. Greater bit depths provide extended dynamic range. Higher sampling rates allow wider frequency response and the use of anti-alias and reconstruction filters with more favorable aural characteristics.

DTS 96/24 allows for 5.1channel sound tracks to be encoded at a rate of 96kHz/24bits on DVD-Video titles.

When DVD-video appeared, it became possible to deliver 24-bit, 96 kHz audio into the home, but only in two channels, and with serious limitations on picture. This capability has had little use.
DVD-audio allows 96/24 in six channels, but a new player is needed, and only analog outputs are provided, necessitating the use of the D/A converters and analog electronics provided in the player.

DTS 96/24 offers the following:

1. Sound quality transparent to the original 96/24 master.
2. Full backward compatibility with all existing decoders. (Existing decoders will output a 48 kHz signal)
3. No new player required: DTS 96/24 can be carried on DVD-video, or in the video zone of DVD-audio, accessible to all DVD players.
4. 96/24 5.1-channel sound with full-quality full-motion video, for music programs and motion picture soundtracks on DVD-video.

"DTS" and "DTS 96/24" are trademarks of Digital Theater Systems, Inc.

DOLBY
DIGITAL • EX
PRO LOGIC IIx

Dolby Digital identifies the use of Dolby Digital audio coding for such consumer formats as DVD and DTV. As with film sound, Dolby Digital can provide up to five full-range channels for left, center, and right screen channels, independent left and right surround channels, and a sixth (".1") channel for low-frequency effects.

Dolby Surround Pro Logic II is an improved matrix decoding technology that provides better spatiality and directionality on Dolby Surround program material; provides a convincing three-dimensional soundfield on conventional stereo music recordings; and is ideally suited to bring the surround experience to automotive sound. While conventional surround programming is fully compatible with Dolby Surround Pro Logic II decoders, soundtracks will be able to be encoded specifically to take full advantage of Pro Logic II playback, including separate left and right surround channels. (Such material is also compatible with conventional Pro Logic decoders.)

Dolby Digital EX creates six full-bandwidth output channels from 5.1-channel sources. This is done using a matrix decoder that derives three surround channels from the two in the original recording. For best results, Dolby Digital EX should be used with movies soundtracks recorded with Dolby Digital Surround EX.

About Dolby Pro Logic IIx

Dolby Pro Logic IIx technology delivers a natural and immersing 7.1-channel listening experience to the home theater environment. A product of Dolby's expertise in surround sound and matrix decoding technologies, Dolby Pro Logic IIx is a complete surround sound solution that maximizes the entertainment experience from stereo as well as 5.1-channel encoded sources.

Dolby Pro Logic IIx is fully compatible with Dolby Surround Pro Logic technology and can optimally decode the thousands of commercially available Dolby Surround encoded video cassettes and television programs with enhanced depth and spatiality. It can also process any high-quality stereo or Advanced Resolution 5.1-channel music content into a seamless 6.1- or 7.1-channel listening experience.

The Dolby Headphone technology provides a surround sound listening experience over headphones.
When listening to multichannel content such as DVD movies over headphones, the listening experience is fundamentally different than listening to speakers. Since the headphone speaker drivers are covering the pinna of the ear, the listening experience differs greatly from traditional speaker playback. Dolby utilizes patented headphone perspective curves to solve this problem and provides a non-fatiguing, immersive, home theater listening experience. Dolby Headphone also delivers exceptional 3D audio from stereo material.

DOLBY
VIRTUAL SPEAKER

Dolby Virtual Speaker is a technologycertified by Dolby Laboratories that creates a virtualized surround sound experience from two speakers using a multichannel Dolby Digital source. Additionally, Dolby Virtual Speaker can simulate the surround sound effect produced by Dolby Pro Logic or Dolby Pro Logic Ⅱ.
Dolby Virtual Speaker retains all the original Multichannel audio information and provides the listener with the sensation of being surrounded by additional speakers.

Manufactured under license from Dolby Laboratories. “Dolby”, “Pro Logic”, “Surround EX”, and the double-D symbol are trademarks of Dolby Laboratories.

SRS
Circle Surround II

Circle Surround Ⅱ (CS-Ⅱ) is a powerful and versatile multichannel technology. CS-Ⅱ is designed to enable up to 6.1 multichannel surround sound playback from mono, stereo, CS encoded sources and other matrix encoded sources. In all cases the decoder extends it into 6 channels of surround audio and a LFE/subwoofer signal. The CS-Ⅱ decoder creates a listening environment that places the listener “inside” music performances and dramatically improves both hi-fi audio conventional surround-encoded video material. CS-Ⅱ provides composite stereo rear channels to greatly improve separation and image positioning– adding a heightened sense of realism to both audio and A/V productions.
CS-Ⅱ is packed with other useful feature like dialog clarity (SRS Dialog) for movies and cinema-like bass enrichment (TruBass). CS-Ⅱ can enable the dialog to become clearer and more discernable in movies and it enables the bass frequencies contained in the original programming to more closely achieve low frequencies–overcoming the low frequency limitations of the speakers by full octave.

Circle Surround Ⅱ, Dialog Clarity, TruBass, SRS and ® symbol are trademarks of SRS Labs, Inc.
Circle Surround Ⅱ, Dialog Clarity and TruBass technology are incorporated under license from SRS Labs, Inc.

Microsoft®
HDCD®

HDCD® (High Definition Compatible Digital ®) is a patented process for delivering on Compact Disc the full richness and details of the original microphone feed.
HDCD encoded CDs sound better because they are encoded with 20-bits of real musical information as compared to 16-bits for all other CDs.
HDCD overcomes the limitation of the 16-bit CD format by using a sophisticated system to encode the additional four bits onto the CD while remaining completely compatible with the CD format.
When listening to HDCD recordings, you hear more dynamic range, a focused 3-D sound stage, and extremely natural vocal and musical timbre. With HDCD, you get the body, depth and emotion of the original performance not a flat, digital imitation.
HDCD system manufactured under license from Microsoft. This product is covered by one or more of the following: In the United States 5,479,168 5,638,074 5,640,161 5,808,574 5,838,274 5,854,600 5,864,311 5,872,531 and in Australia 669,114 with other patents pending.

HDMI

HDMI, the HDMI and High-Definition Multimedia Interface are trademarks or registered trademarks of HDMI Licensing LLC.

There are several factors that can degrade the sound from even the best loudspeakers in a listening room. One of the most important is the interaction of sound from the loudspeakers with large surfaces such as walls, the floor, and the ceiling in the room. Even with careful loudspeaker placement and acoustical treatments, there are significant problems that are caused by room acoustics. These include reflections from nearby surfaces and standing waves that are created between large parallel surfaces in the room. In a home theater the situation is further complicated because there are several listening locations. The effects of room acoustics on the sound arriving at each person's ears are very different and the result is a listening experience that is degraded in a different way for every person in the room. It is not uncommon to have variations in two adjacent seats that are as large as 10 dB, particularly in the frequency range below 250 Hz.

The solution to this problem is to apply room correction after precisely measuring how each loudspeaker interacts with the room. Because the room causes variations in the frequency response of the loudspeakers that are so large from seat to seat, it is important to measure each loudspeaker at several locations in the listening room. This should be done even if there is only one listener. Measurement at a single location is not representative of the acoustical problems in the room and will in most cases, degrade overall performance. Audyssey MultEQ is the only technology that can achieve room correction for multiple listeners in a large listening area. It does so by combining the data collected at several points in the room from each loudspeaker and then applying correction that minimizes the acoustical effects of the room and is matched to the frequency resolution of human perception (known as psychoacoustics). Furthermore, MultEQ correction is applied both in frequency and time domains and so there are no artifacts (such as smearing of sound or modal ringing)that are sometimes associated with traditional methods of room equalization.

In addition to correcting frequency response problems over a wide listening area, Audyssey MultEQ provides a completely automated sound system set-up process. It identifies how many loudspeakers are connected to the amplifiers and whether they are full-range, satellites, or subwoofers. If there is a least one subwoofer connected, Audyssey MultEQ determines the optimum crossover frequency between each satellite and the subwoofer(s). It automatically checks the polarity of each loudspeaker and alerts the user if there are any that may be wired out-of-phase relative to the others. It measures the distance to each loudspeaker from the main listening position and adjusts the delays so that sound from each loudspeaker arrives at the same time. Finally, Audyssey MuitEQ determines the playback level of each loudspeaker and adjusts the volume trims so that all levels are equal.

XM Satellite Radio Ready

READY

3. POWER AMPLIFIER ADJUSTMENT

Idling Current Alignment

1. Each of the measurement points are provided with the two test points. Set a digital Voltage meter to DC voltage input, connect the meter to the test points at both contact points.
2. After the setup above, turn on the main switch.
3. Adjust variable resistors (VR41 - VR71) according to the digital voltmeter readings. The target setting value is the following table for each channel.

Settings: Master Volume — Minimum
Speaker out — No Load
Top lid — OPEN

アイドリング電流調整

1. 電源を ON する前にそれぞれの "+" 端子と "-" 端子間にデジタルボルトメーターを接続します。デジタルボルトメーターを DC 電圧入力にセットします。
2. 上記のセットアップの後に、本機の電源を ON します。
3. デジタルボルトメーターの電圧値を監視しながら可変抵抗器 (VR41 ～ VR71) を調節します。
   各チャンネルの目標値は下記の表を参照下さい。

セッティング : マスター・ボリューム — 最小
スピーカー接続 — 無し
トップカバー — 無し

Channel	Alignment Point	Measurement Point
Front L	VR41	CN41
Center	VR61	CN61
Front R	VR51	CN51
Surround L	VR42	CN42
Surround R	VR52	CN52
Surround Back L	VR62	CN62
Surround Back R	VR71	CN71

Time Table of Idling Current Rise

After Turning ON	Ambient temperature 20 to 30 degrees centigrade
	Measurement Voltage
10 min.	2.4 mV ± 0.3 mV
20 min.	2.4 mV ± 0.3 mV
30 min.	2.4 mV ± 0.3 mV

4. SERVICE MODE

MAIN CPU Version, DSP Version, HDMI CPU Version and Segment Check Mode

1. Connect the mains cord into the unit.
2. Press the **POWER ON/STANDBY** button for turn on the unit.
3. Press the **PURE DIRECT**, **7.1CH INPUT** and **MultEQ** buttons simultaneously more then 3 seconds.
4. The FL display shows "SERVICE MODE" for 2 seconds then shows the model name.

S	E	R	V	I	C	E		M	O	D	E	

			S	R	8	0	0	1				

5. Press the **ENTER** button, the software version of the MAIN CPU (IC17) is displayed in the format below.

V	0	6	0	7	0	7		3	N			

Year, Month, Date, Release No., Destination

6. Press the **ENTER** button again, the serial Number of the unit is displayed.

M	Z		2	9	4	9	6	7	2	9	5	

7. Press the **ENTER** button, the software version of the TI DSP (IC34) is displayed in the format below.

T	I		V	0	3	8	6	0	6	1	2	1

Year, Month, Date, Release No.

8. Press the **ENTER** button, the software version of the HDMI CPU (IC90) is displayed in the format below.

H	D	M	I		V	e	r	.	h	1	8	

9. Press the **ENTER** button again, the left half, right half and center of the label area in the FLD light on and off each other.
10. Press the **ENTER** button again, the segments of the character area in the FLD flick in checker pattern.
11. Press the **ENTER** button again, all the FL segments turns off.
12. Press the **ENTER** button again to quit this mode.

4. SERVICE MODE

MAIN CPU Version, DSP Version, HDMI CPU Version and Segment Check Mode

1. 本機に電源コードを接続します。
2. **POWER ON/STANDBY**ボタンを押し、本機の電源を入れます。
3. **PURE DIRECT**, **7.1CH INPUT**, **MultEQ**の3つのボタンを同時に3秒以上押します。
4. FLに"SERVICE MODE"と2秒表示し、次にモデル名を表示します。

S	E	R	V	I	C	E		M	O	D	E	

			S	R	8	0	0	1				

5. **ENTER**ボタンを押すと、MAINマイコン(IC17)のバージョンが表示されます。

V	0	6	0	7	0	7		3	N			

Year, Month, Date, リリース No., 仕向け

6. 更に**ENTER**ボタンを押すと、シリアルナンバーが表示されます。

M	Z		2	9	4	9	6	7	2	9	5	

7. 更に**ENTER**ボタンを押すと、TI DSP (IC34)のバージョンが表示されます。

T	I		V	0	3	8	6	0	6	1	2	1

Year, Month, Date, リリース No.

8. 更に**ENTER**ボタンを押すと、HDMI CPUのバージョンが表示されます。

H	D	M	I		V	e	r	.	h	1	8	

9. 更に**ENTER**ボタンを押すと、FLのラベル部分の左半分と右半分および中心部が交互に点灯と消灯を繰り返します。
10. 更に**ENTER**ボタンを押すと、FLのキャラクタセグメント部がチェッカーフラグのように点灯と消灯を繰り返します。
11. 更に**ENTER**ボタンを押すと、FLは全消灯します。
12. 更に**ENTER**ボタンを押すと、サービスモードを終了します。

Product Reset

To reset the back up memory of the unit into the default status, follow the procedure below.

Should the operation or display seem to be abnormal, reset the unit with the following procedure.
To turn on the SR7001/SR8001, press and hold the **MULTI** and **SPEAKERS A/B** buttons simultaneously for 3 seconds or more.
Remember that the procedure will reset the settings of the function selector, Surround mode, delay time, TUNER PRESET etc., to their initial settings.

Personal notes:

5. SYSTEM ERROR

1. Trouble in EEP-ROM (DSP PWB / IC15) Interface

C	H	E	C	K		E	2	P		I	F	

- If the communication error that ACK did not return by communication with EEP-ROM (DSP PWB / IC15) occurred 2 seconds and more.

  CHECKPOINT
  1. Turn the power on. Are the IIC Clock Line (IC17/130pin - IC15 / 6pin) normal?
  2. Are the IIC Data Line (IC17/131pin - IC15 / 5pin) normal?
  3. Is +3.3V voltage supplied to 8pin of IC15?
  4. When no problem to the above 1-3, replace IC15.

2. Trouble in +5V Supply

C	H	E	C	K		P	O	W	5			

- If +5V inputted into 68pin of IC17 is troubled and the following the fault of 1 - 4.

  CHECKPOINT
  1. Turn the power on. Is +5V voltage supplied to CN30/ 6pin and CN30/7pin of DSP PWB.
  2. Is the signal of IC17 H? 29pin (Power Amp Fail)= H. (When 2 second or more "L" state is continuing to 29pin, Abnormalities have occurred in the POWER AMP circuit.)
  3. Is the signal of IC17 H? 66pin (Power Line Fail)= H. (When the 2 second and more "L" state is continuing to 66pin, Abnormalities have occurred to +-15V power supply or the power supply for Power Amp.)
  4. Is the signal of IC17 H? 77pin (Power Down)= H. (When 2 second and more "L" state is continuing to 77pin, Abnormalities have occurred in IC74 and around IC77 circuit of STANDBY PWB.)

3. Trouble in Protection

P	R	O	T	E	C	T						

- When unusual states, such as overload of Power Amp and DC output, are detected.
  The unusual detection method is the following.
  1. When "L" of 100 msec and more is detected by 29pin (Power Amp Fail) of IC17, the unit will be in standby mode and STANDBY LED will blink.

5. SYSTEM ERROR

1. EEP-ROM (DSP PWB / IC15) Interface異常検出表示

- EEP-ROM (DSP PWB / IC15)との通信でACKが帰ってこない状態（通信エラー）が約２秒以上生じた時に表示されます。

  回路上の確認箇所
  ①. Power ON時にIIC Clock Line (IC17/130pin - IC15 / 6pin)が正常なのを確認する。
  ②. Power ON時にIIC Data Line (IC17/131pin - IC15 / 5pin)が正常なのを確認する。
  ③. IC15 / 8pinにVCC (+3.3V)が供給されていることを確認する。
  ④. 上記の①－③に不具合が生じていない場合はIC15の不良が考えられます。

2. +5V Supply異常検出表示

- 電源ON時に68pinに入力される+5Vの検出が出来なかった場合に表示されます。 又、下記の②～④の不具合発生時にも同様の表示を行います。

  回路上の確認箇所
  ①. 電源ON時にCN30 (DSP PWB) 6,7pinに+5Vが供給されていることを確認する。
  ②. 電源ON時にマイコンの29pin (Power Amp Fail) が "H"になっていることを確認する。（29pinが電源ONしてから２秒以上"L"状態が継続している場合はPOWER AMP回路に異常が発生している）
  ③. 電源ON時にマイコンの66pin(Power Line Fail)が "H"になっていることを確認する。（66pinが電源ONしてから2秒以上"L"状態が継続している場合は+/-15V電源又は、Power Amp用の電源に異常が発生している）
  ④. 電源ON時にマイコンの77pin (Power Down)が "H"になっていることを確認する。（77pinが電源ONしても"L"状態が継続している場合はSTANDBY PWB上のIC74及び周辺回路に異常が発生している）

3. PROTECTION検出表示

- Power Ampの過負荷、DC出力等の異常状態が検出された際に表示されます。
  また、異常検出は以下の様に行われます。
  ①. マイコンの29pin (Power Amp Fail)に100msec以上の "L"検出がされた場合はSETをSTANDBY状態にしてFront Panel上のSTANDBY LEDを点滅状態にします

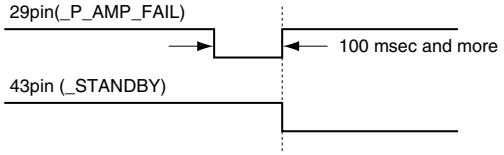

2. When "L" of less than 100msec is detected by 29pin (Power Amp Fail) of IC17, Speaker Relay becomes OFF and MUTE becomes ON state, and the state is held for 8 seconds. At this time, "PROTECT" is displayed. When similar abnormal detection was considered to be it for these 8 seconds, the unit will be in standby mode and STANDBY LED will blink. When it was not detected abnormally for 8 seconds, the unit returns to normal use state.

②. マイコンの29pin (Power Amp Fail)に100msec未満の"L"検出がされた場合はSpeaker RelayをOFF, MUTEをON状態にして８秒間その状態を保持する。この間、FL Displayに "PROTECT"の表示を行う。この８秒間に同様の異常検出がされた場合はSETをSTANDBY状態にしてFront Panel上のSTANDBY LEDを点滅状態にします。８秒間、異常検出されなかった時はSETを通常使用状態に戻します。

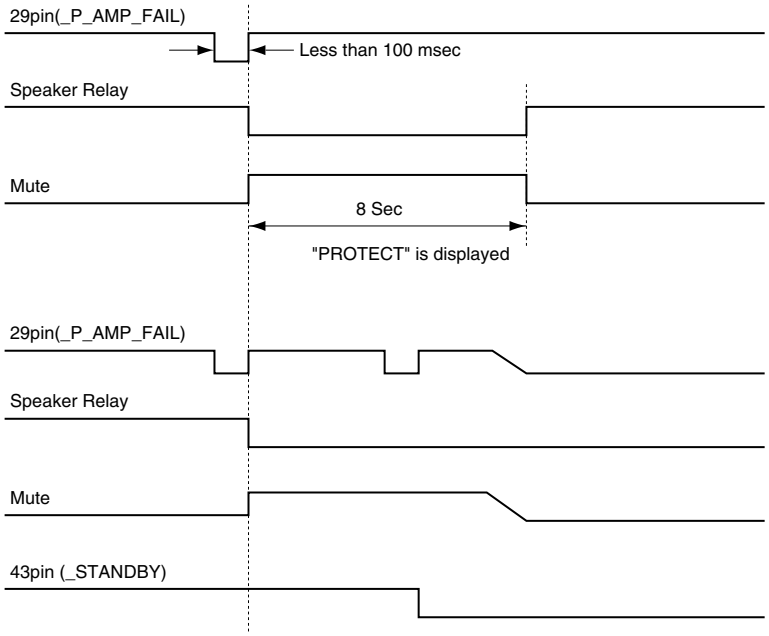

CHECKPOINT
1. Check AMP PWB.
2. When AMP does not have a problem, it is confirmed whether there is not abnormality by disconnection of pattern of 29pin (Power Amp Fail) and the detect circuit.

回路上の確認箇所
①. Power Ampに不具合が生じている場合は修理を行う。
②. Power Ampに不具合が無い場合は、29pin (Power Amp Fail)のパターンの断線及び検出回路に異常が無いか確認する。

4. Trouble in Other

(The contents of detection are not indicated to FL.)

- When the abnormalities of ±15V power supply and the ±power supply for Power Amp are detected, the unit will be in standby mode. The detection is performed by 66pin (P LINE FAIL).

4．その他の異常検出

（FLにCaution表示はしません）

- ±15V電源及び、Power Amp用の±電源の異常を検出した場合、SETをSTANDBYにします。 検出は66pin (_P_LINE_FAIL)で行われます。

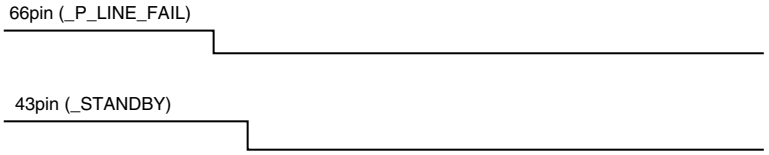

CHECKPOINT
1. Check Power supply circuit.
2. When Power supply circuit does not have a problem, it is confirmed whether there is not abnormality by disconnection of pattern of 66pin (Power Line Fail) and the detect circuit.

回路上の確認箇所
①. 上記の電源回路に不具合が生じている場合は修理を行う。
②. 電源回路に不具合が無い場合は、66pin (Power Line Faill)のパターンの断線及び検出回路に異常が無いか確認する。

6. UPDATE FIRMWARE

[A] SOFTWARE (fdtv306r00.exe) DOWNLOADS AND INSTALLS PROCEDURE

[A-1] DOWNLOADS OF THE SOFTWARE (Flash Development Toolkit: the rest is FDT)

Download the software for update of the HDMI CPU.

1. Launch the browser.
2. Type the "http://www.renesas.com/" into an address. And click the **Go** or press the **Enter** on keyboard of PC.

NOTE : This site is managed by RENESAS. The following explanation may differ from the actual composition. When different, please proceed along with the site composition of RENESAS.

3. Click the **GLOBAL SITE**.

6. UPDATE FIRMWARE

[A] SOFTWARE (fdtv306r00.exe) DOWNLOADS AND INSTALLS PROCEDURE

[A-1] DOWNLOADS OF THE SOFTWARE (Flash Development Toolkit: 以下 FDT)

HDMIマイコンの書き込みのためのソフトウェア(FDT)をダウンロードします。

1. ブラウザ(インターネットエクスプローラーなど)を立ち上げます。
2. ブラウザのアドレスに"http://www.renesas.com/"を入力し、**移動**、またはキーボードの**Enter**を押します。

注意：このサイトはRENESASが管理しているため、以下の説明が実際のサイト構成と異なっている場合があります。その場合は実際のRENESASのサイト構成に沿って進めてください。

3. **GLOBAL SITE**をクリックします。

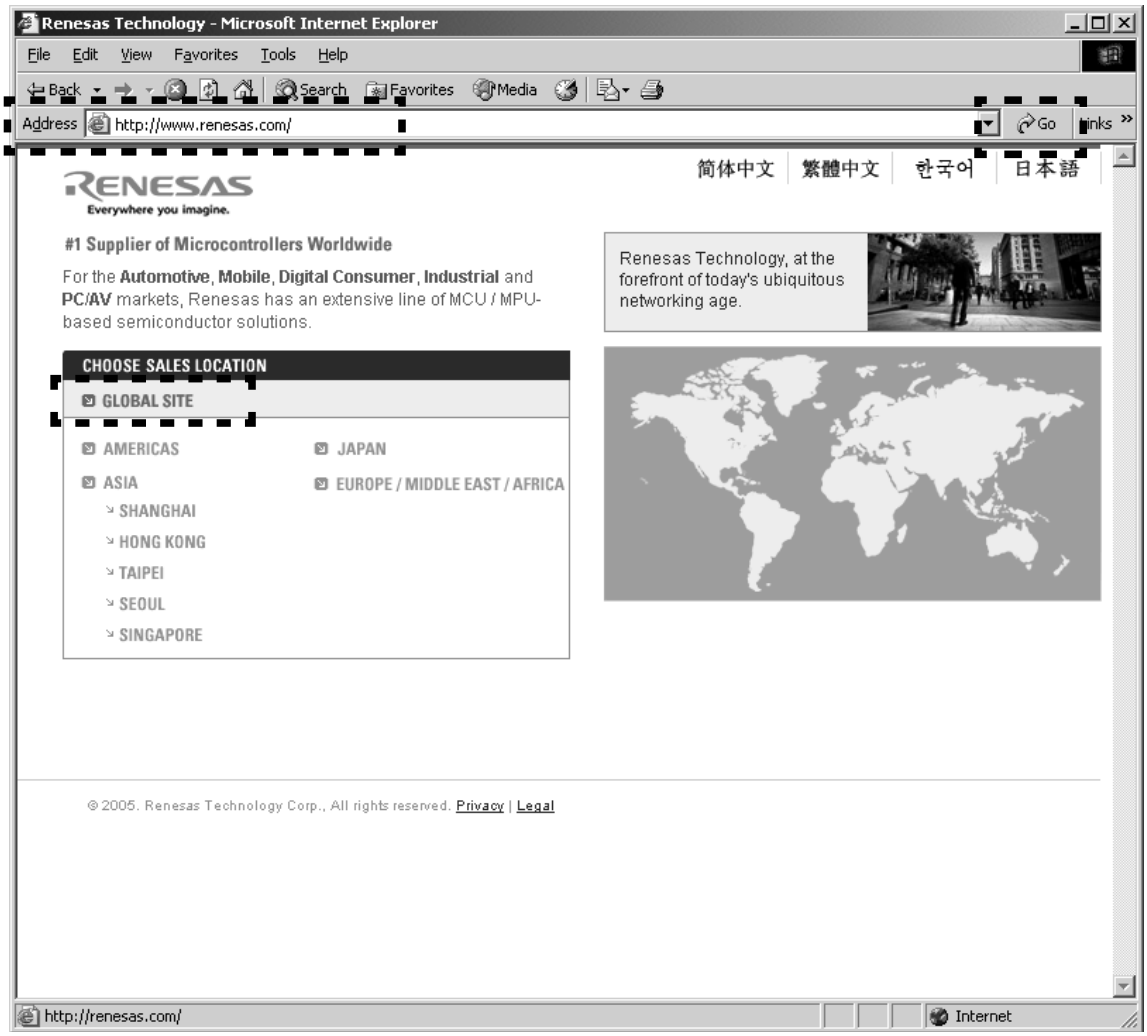

4. A login ID is necessary to download the FDT.
   If you have Login ID, please advance to step 15.
   If you do not have Login ID, Click the **MY RENESAS**.

4. FDTのダウンロードにはLogin IDが必要になります。
   既にLogin IDを持っている方は手順の15へ進んでください。
   Login IDを持っていない方は**MY RENESAS**をクリックします。

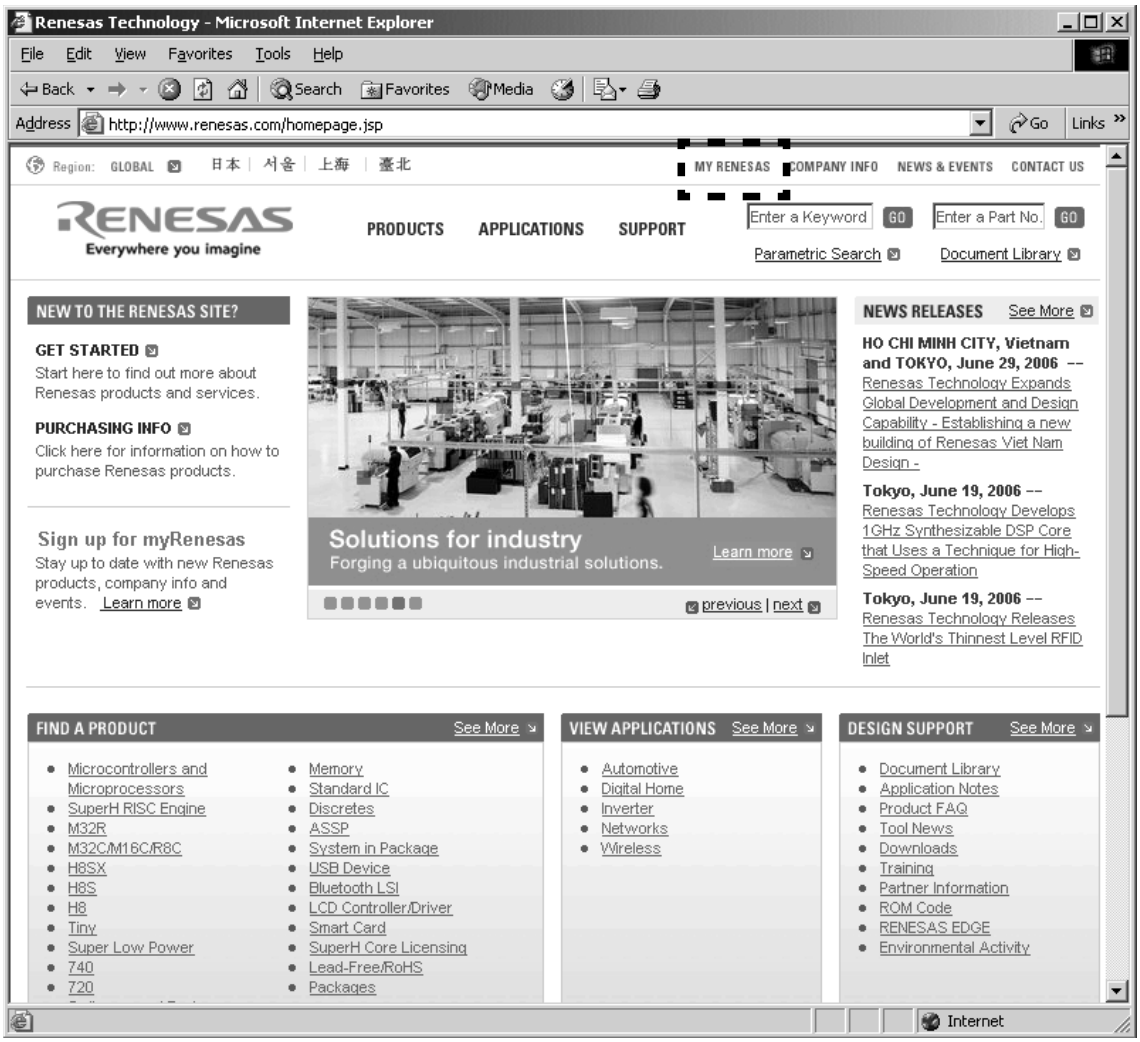

5. Click the **If you are a new user click here to register now**.

5. **If you are a new user click here to register now**をクリックします。

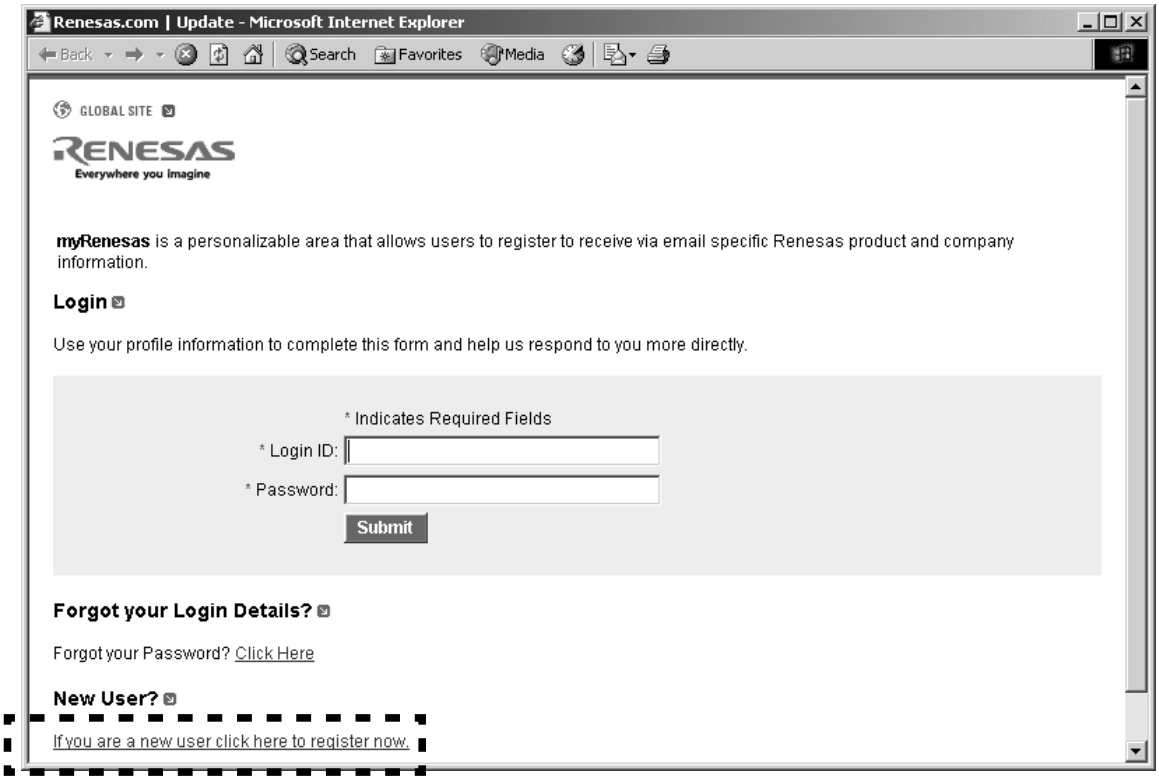

6. Choose **Non Secure** or **Secure** in Security Level at your network environment.
Choose **English** or **another one** in Region and Language.

6. PCのネットワーク環境により**Choose Security Level**から **Non Secure**、または**Secure**を選んでください。
Choose Region and Languageから**日本語**をクリックします。

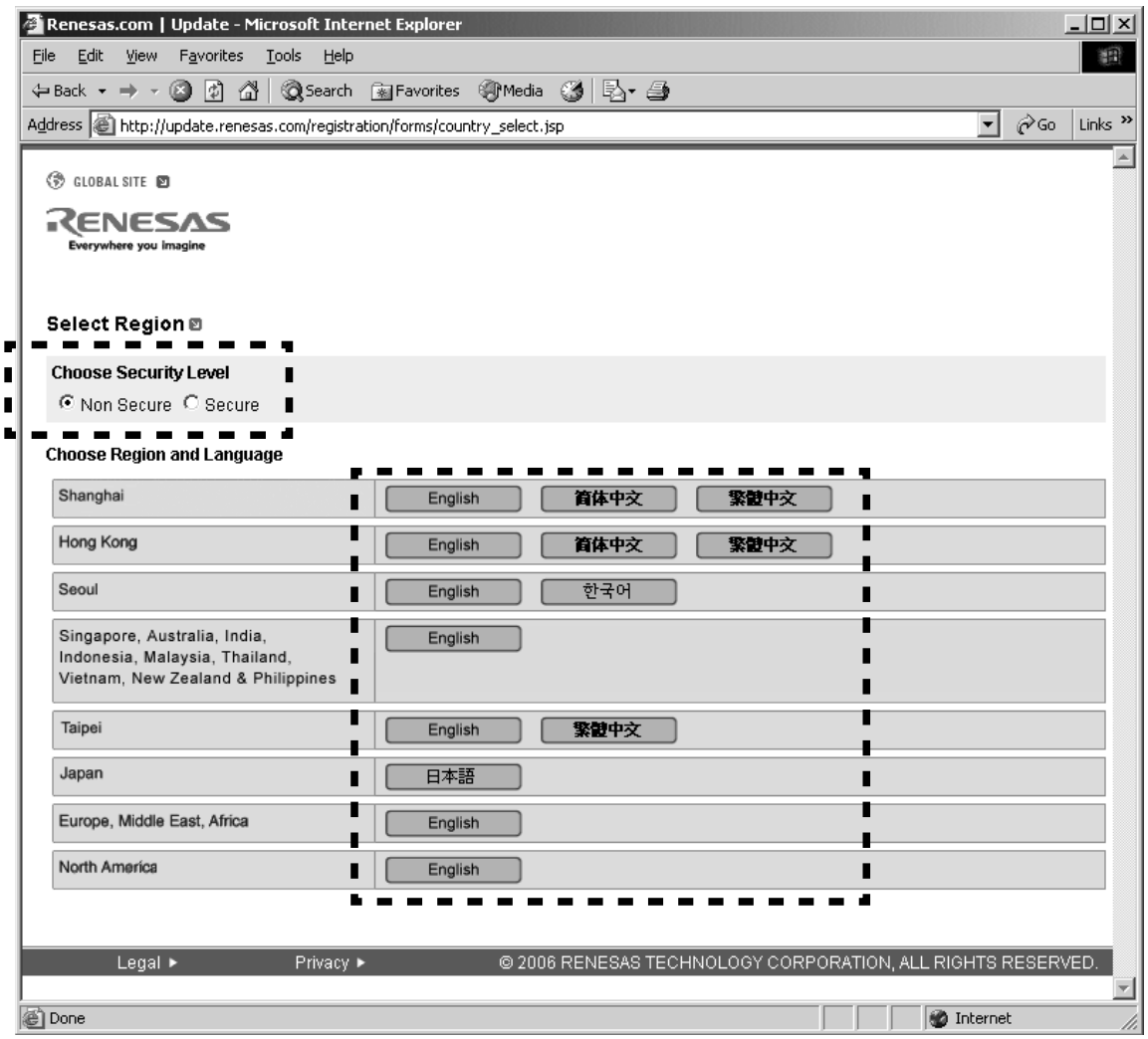

7. Input the each item.

NOTE : The items displayed by a language and region are different.

7. 各項目を記入します。

注意：下記説明は英語ですが、日本語を選んだ場合日本語で表示されます。

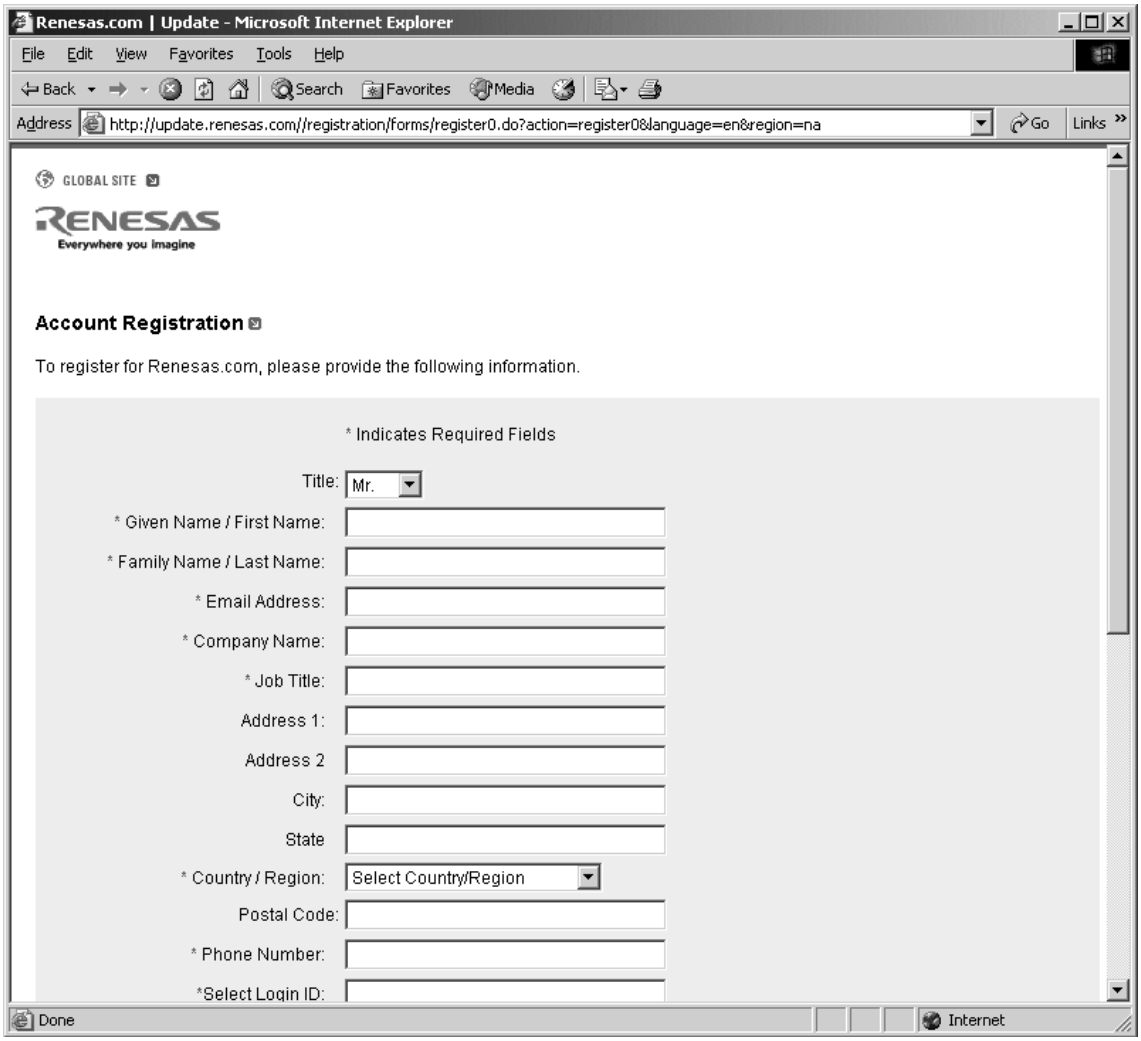

8. If you have inputted the necessary items, check the **I Agree**, and click the **Submit**.

8. 必須項目を入力したならば、**同意します**にチェックを入れ、**送信**をクリックします。

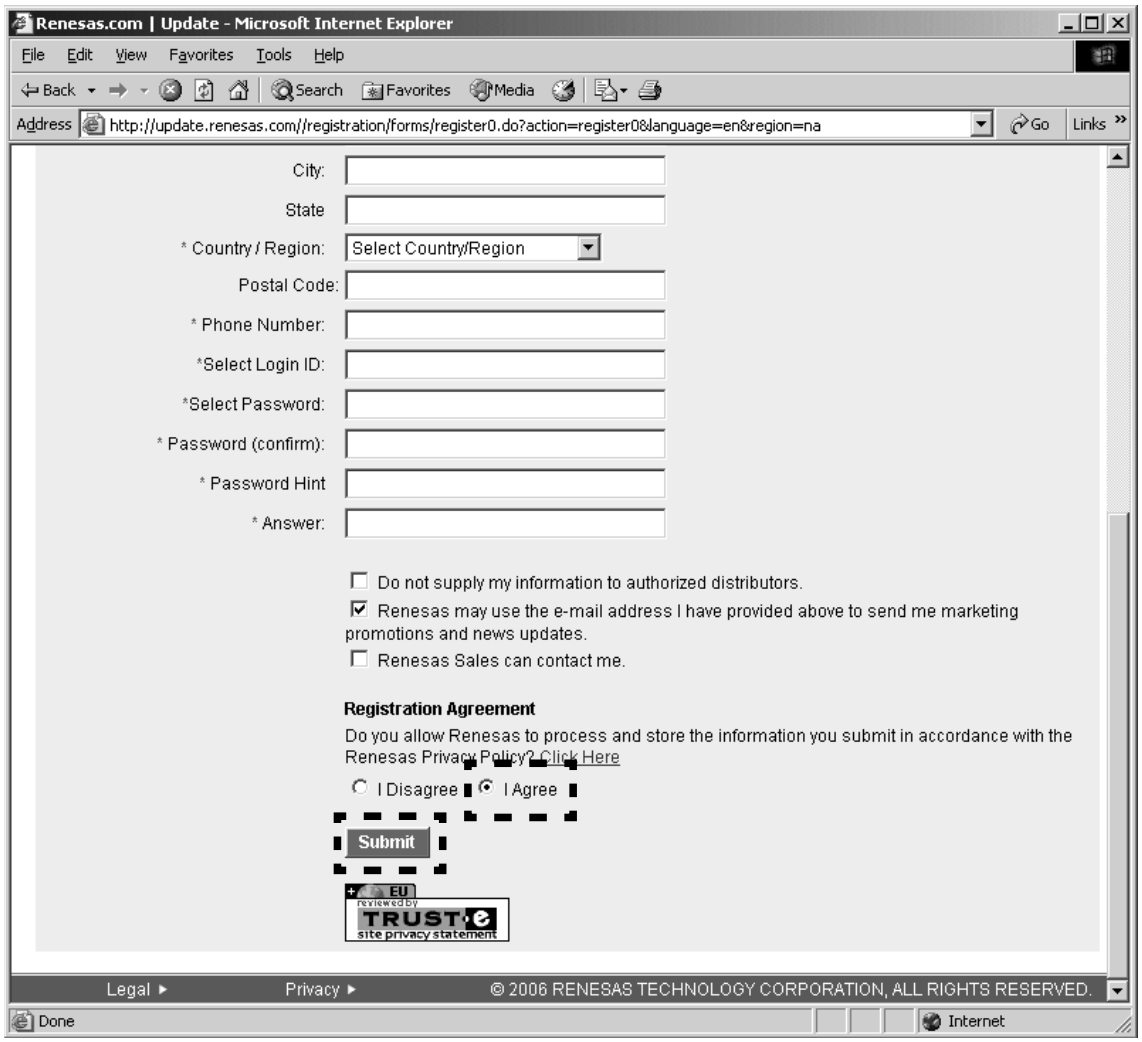

9. The input is needless in this page.
Scroll down the page.

9. このページは入力しなくても結構です。
ページをスクロールダウンします。

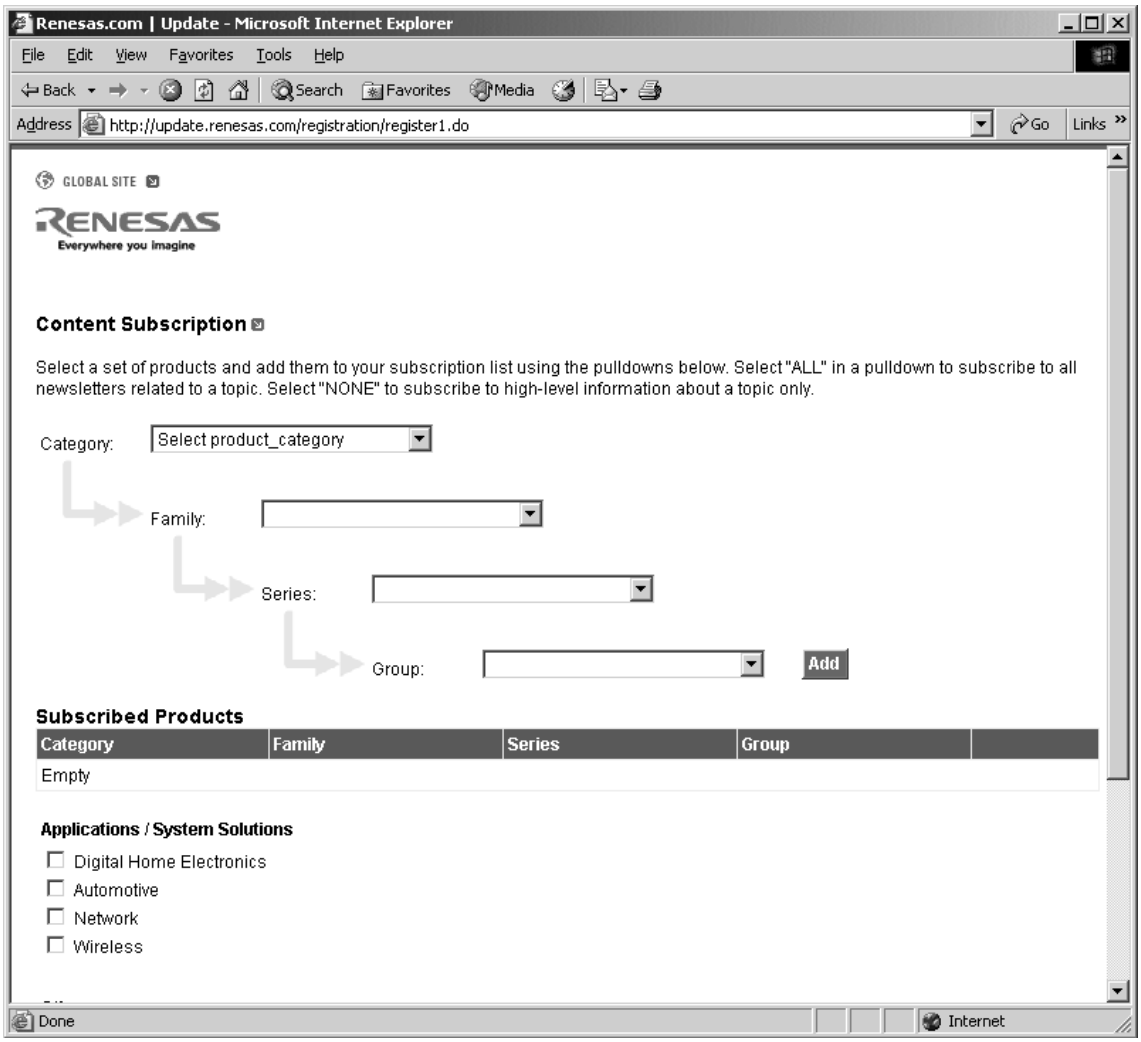

10. Click the **Submit**.

10. **送信**をクリックします。

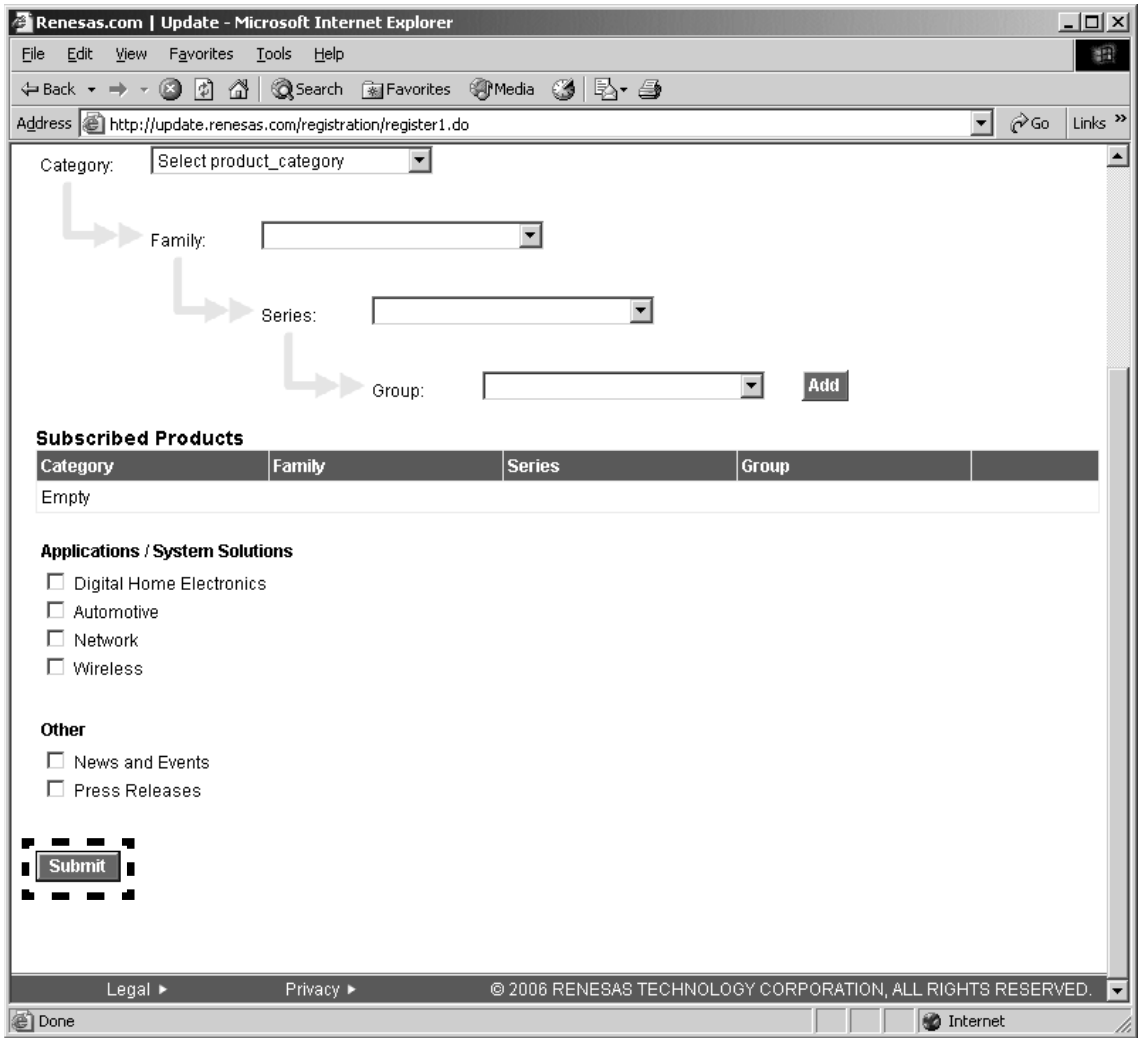

11. Immediately, an E-mail arrives from the RENESAS.
    Click the link in the E-mail to go to the registration site, and input the Login ID and Password.
    And Click the **Submit**.

11. 直ちに、RENESASからE-mailが届きます。
    E-mail内に有る登録サイトへのリンクをクリックします。
    Login IDとPasswordを入力し**Submit**をクリックします。

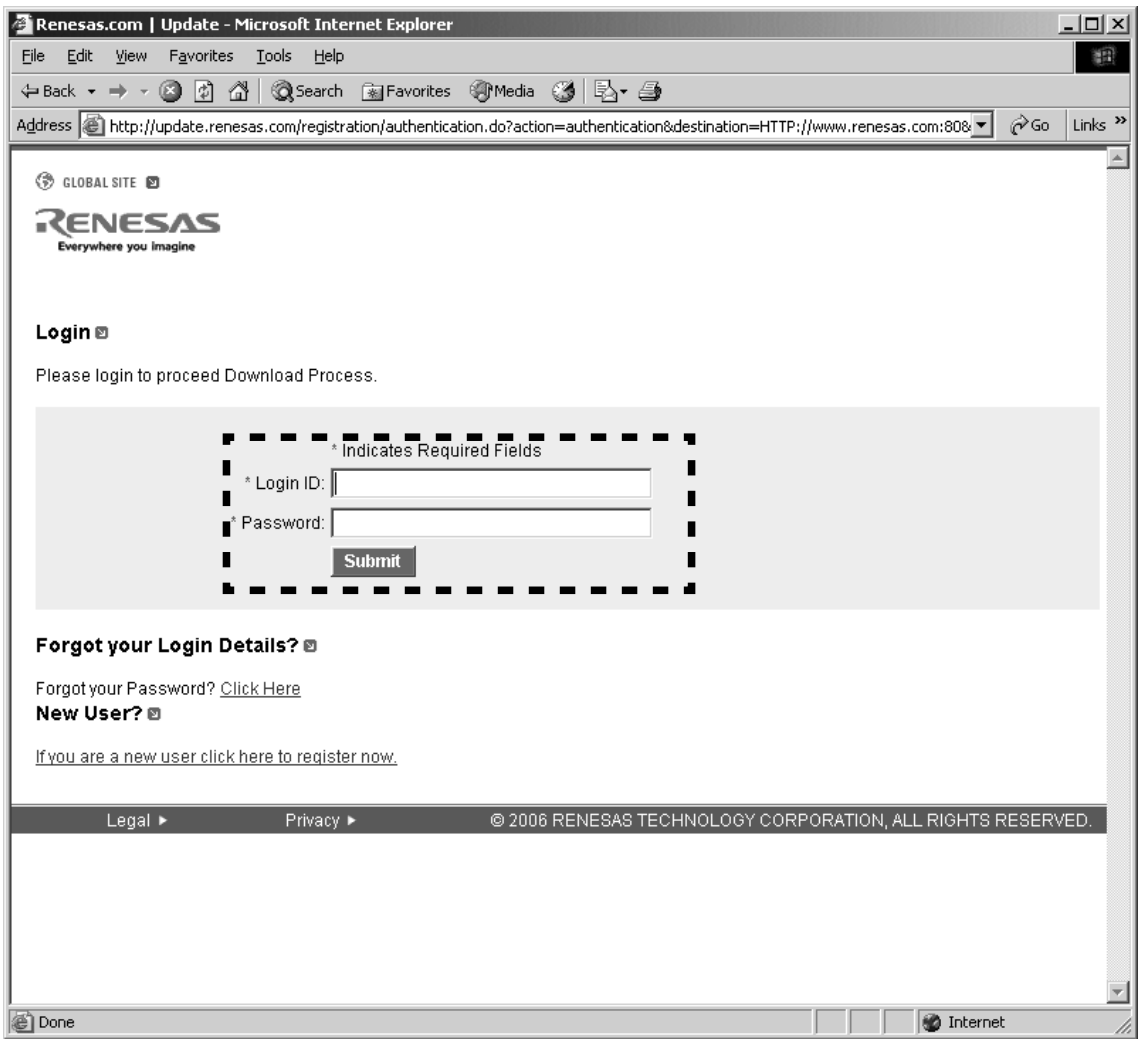

12. Registration is finished.
13. Open the RENESAS top page from registration page.

12. 登録が完了します。
13. 登録ページに有るリンクからRENESASのトップページに移動します。

14. Click the **GLOBAL SITE**.

14. **GLOBAL SITE**をクリックします。

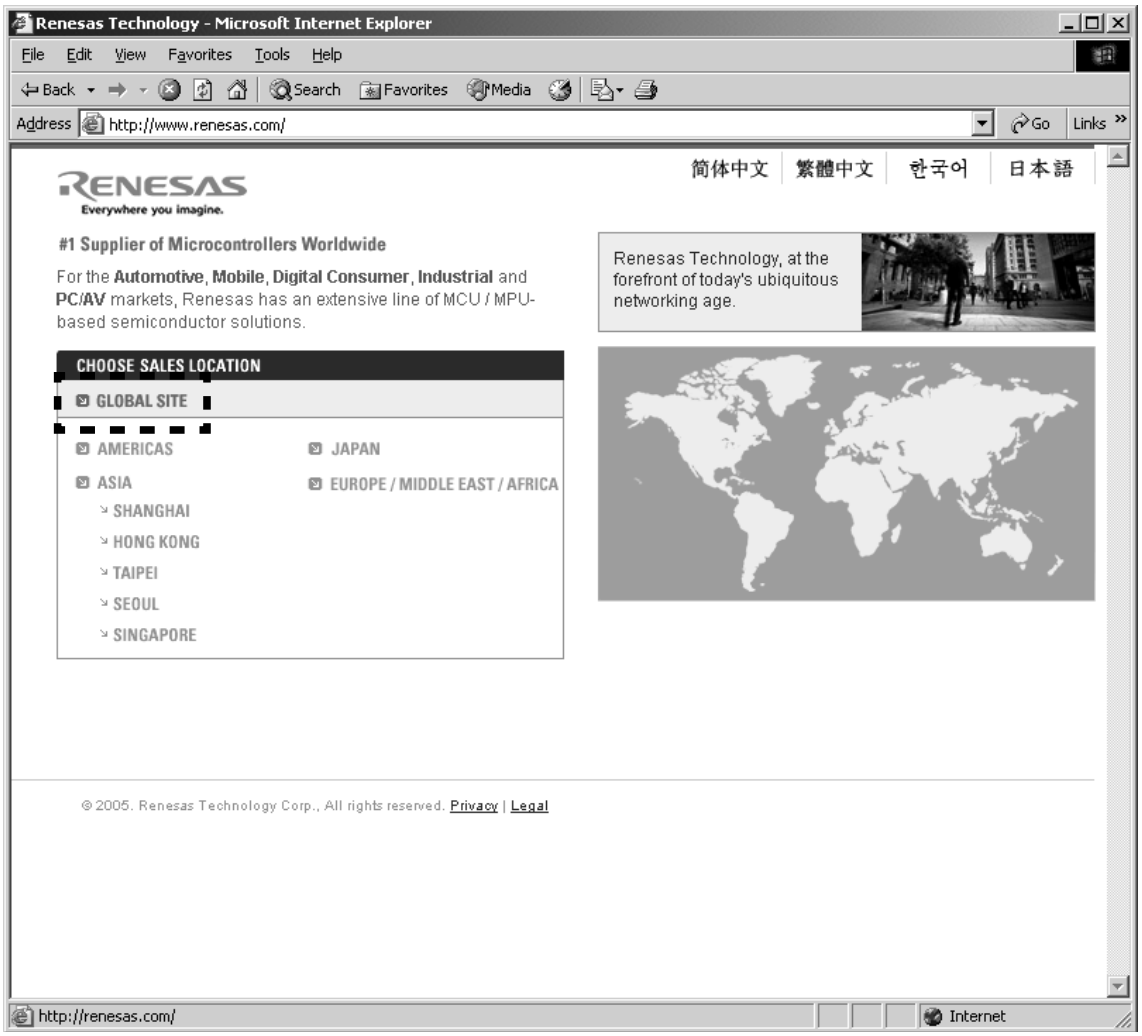

15. Click the **Downloads** in the DESIGN SUPPORT.

15. DESIGN SUPPORT内の**Downloads**をクリックします。

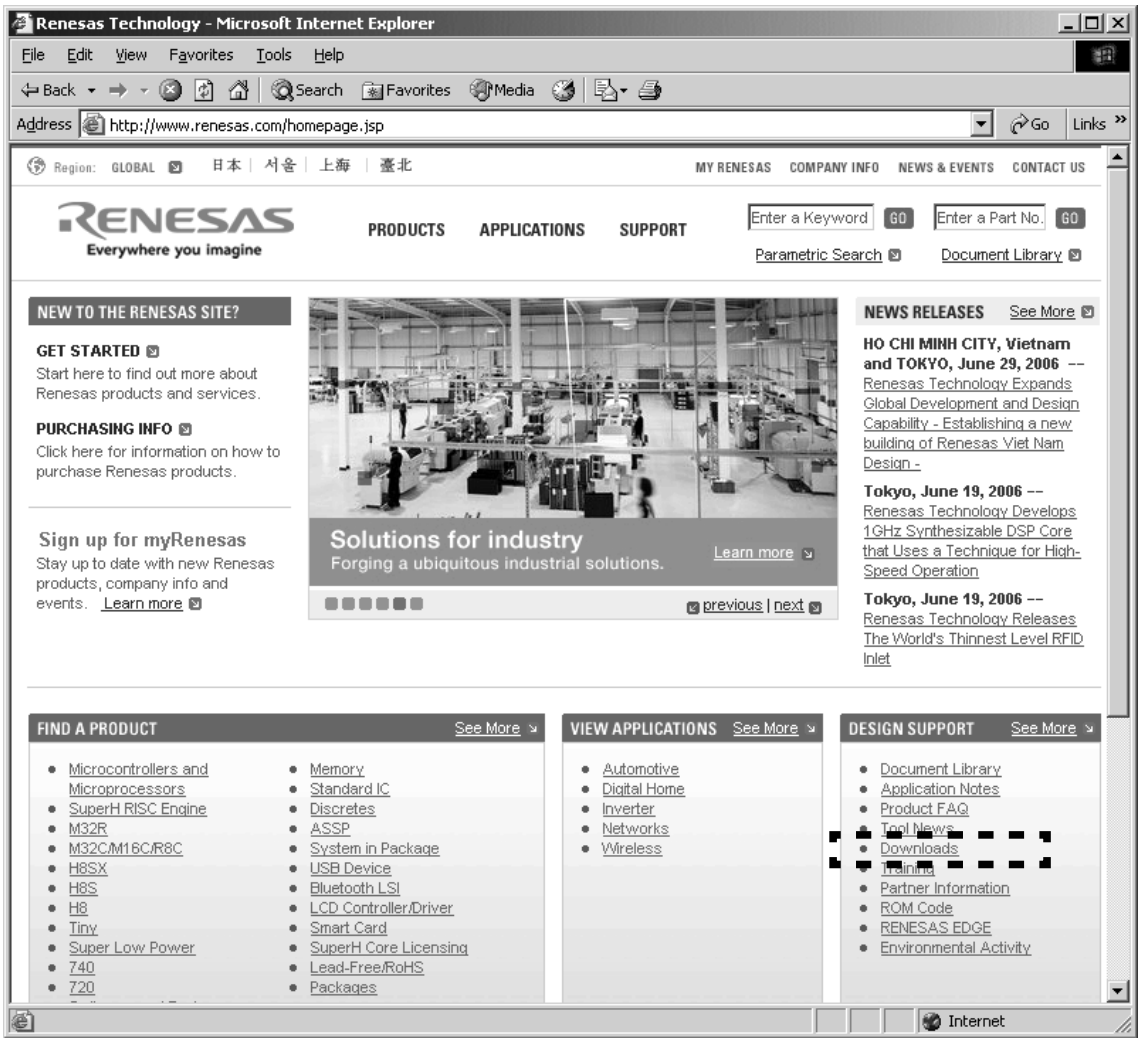

16. Type the "Flash Development toolkit" into the Download Title.
And click the **Start Search**.

16. Download Titleに"Flash Development toolkit"を入力します。
Start Searchをクリックします。

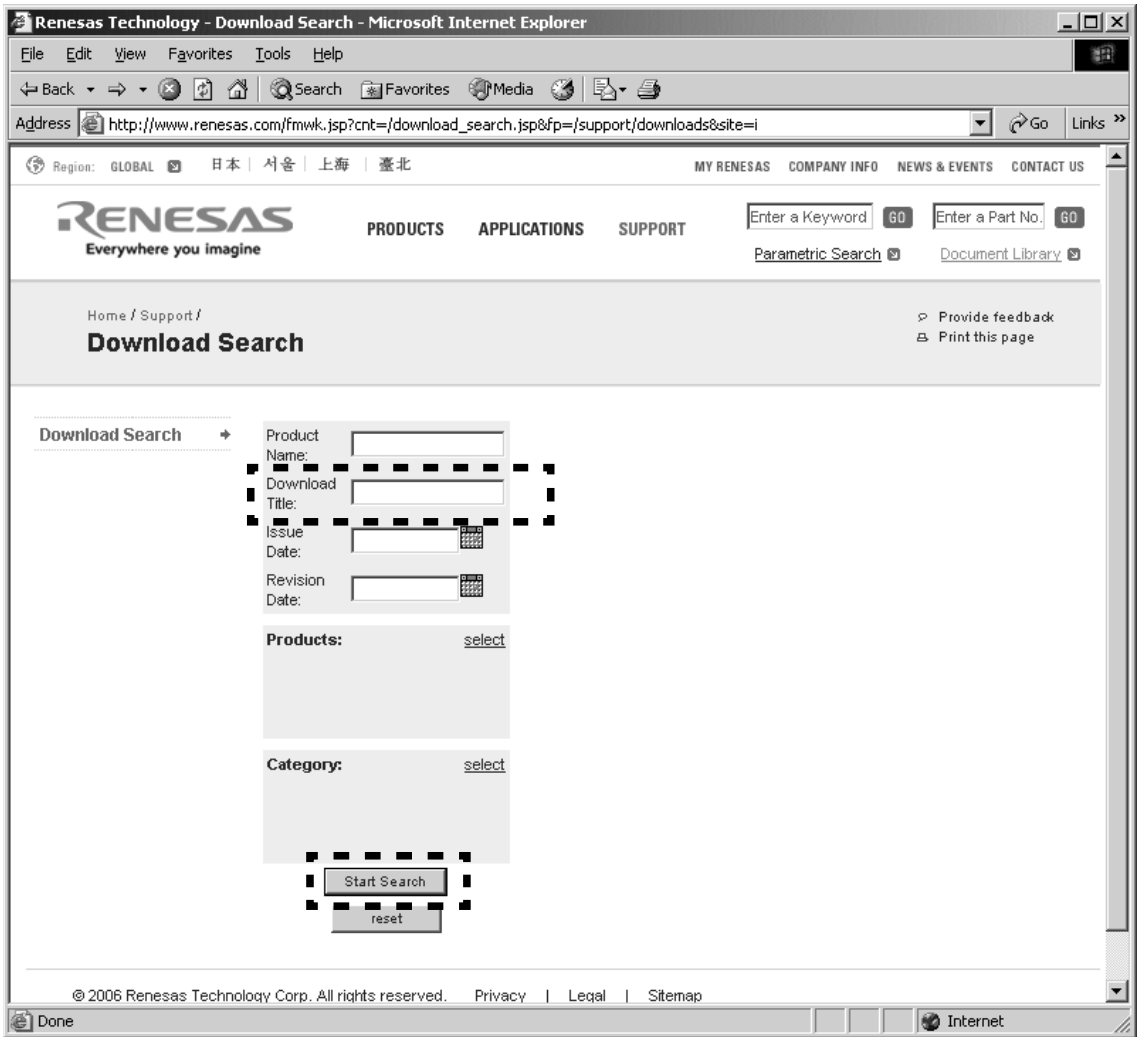

17. Click the **Flash Development Toolkit** of the top on the table.

NOTE : The latest edition is FDT V3.06 at present. (July, 2006) It is in FDT V3.06 as follows and explains it.

17. 検索結果の一番上の**Flash Development Toolkit**をクリックします。

注意：現時点(2006年7月)での最新バージョンはV3.06になります。以下FDT V3.06で説明します。

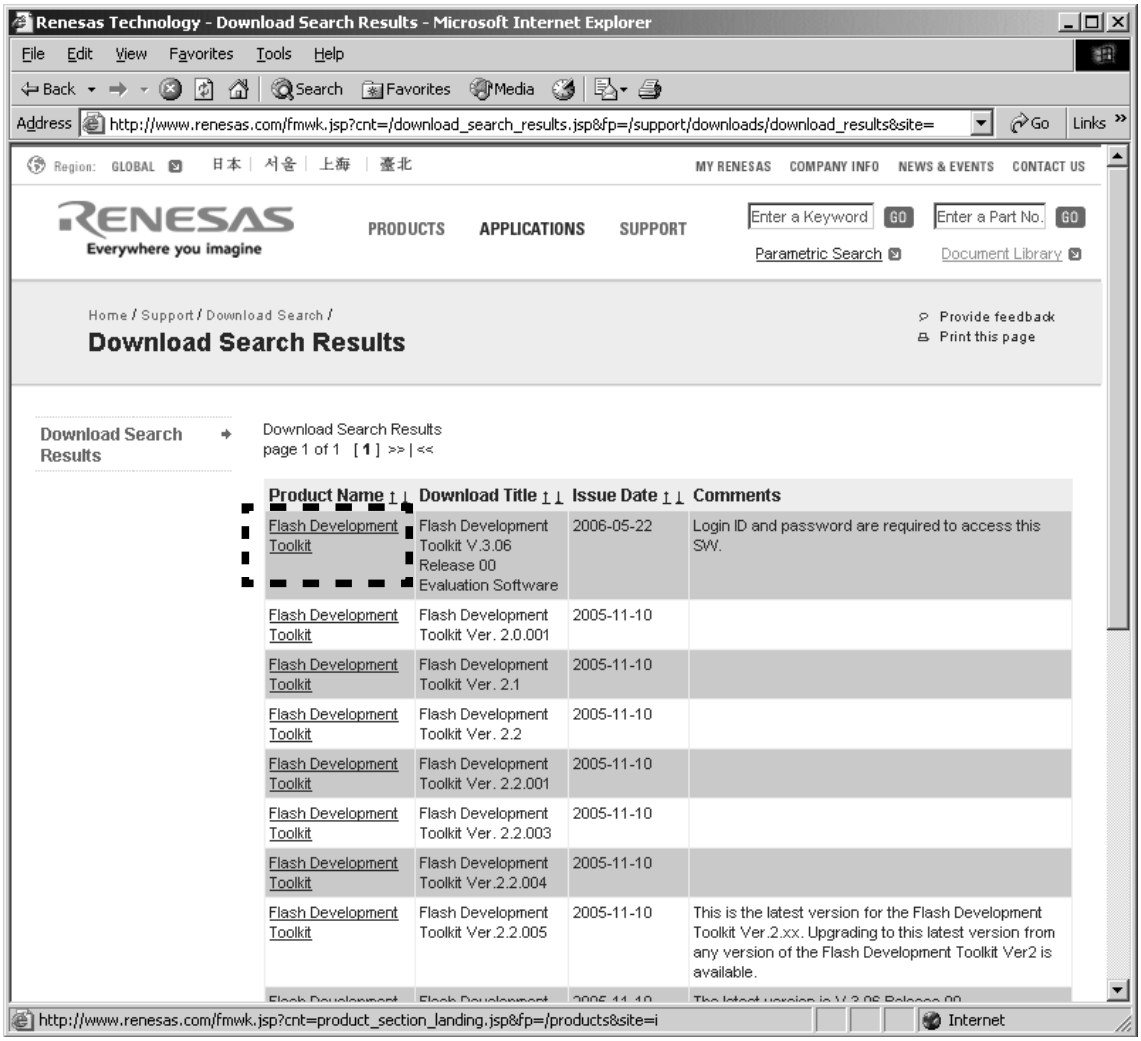

18. Input the Login ID and Password.
And click the **Submit**.

18. ダウンロードするためにLogin IDとPasswordを入力します。
Submit.をクリックします。

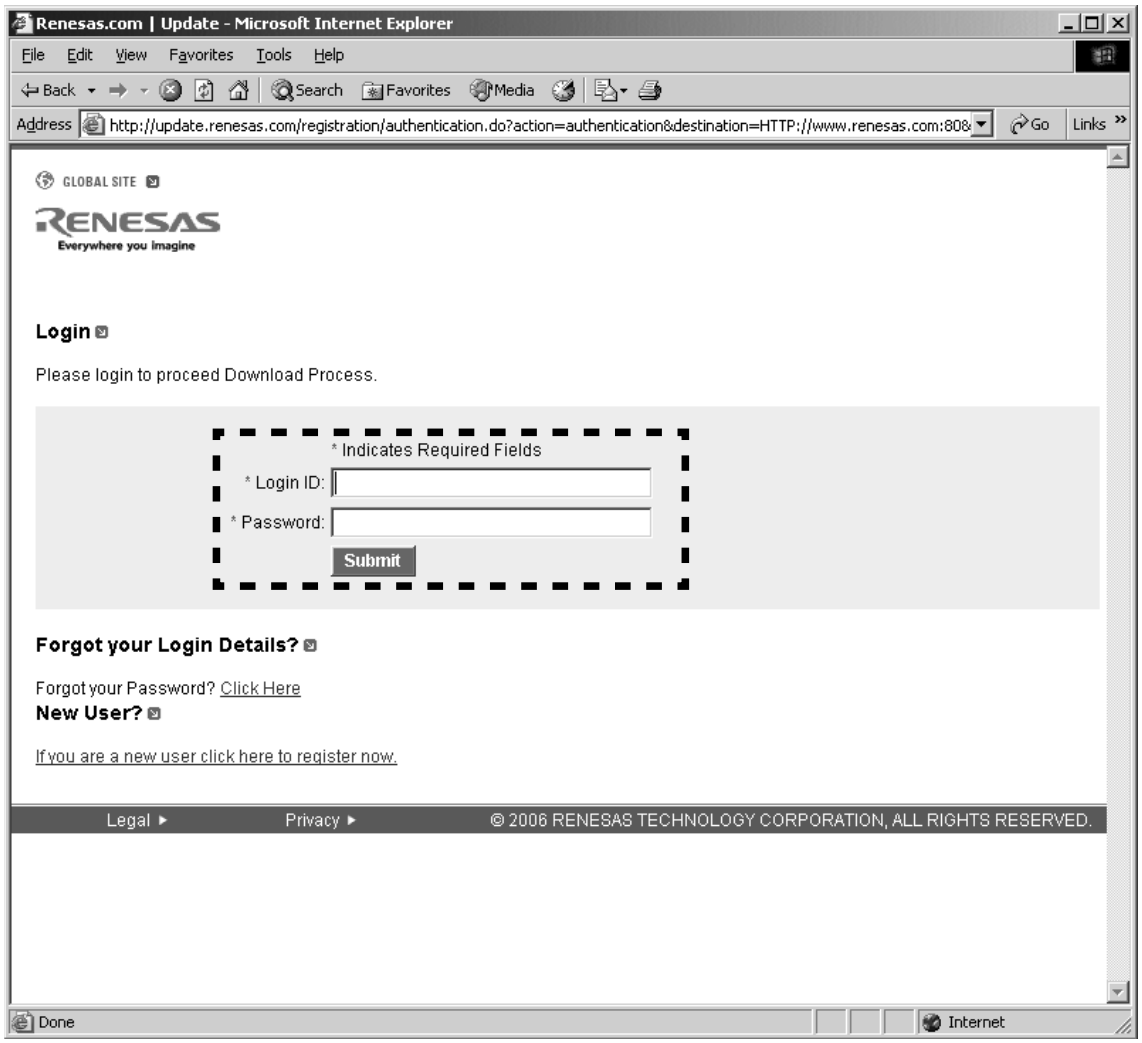

19. Scroll down the page.

19. ページをスクロールダウンします。

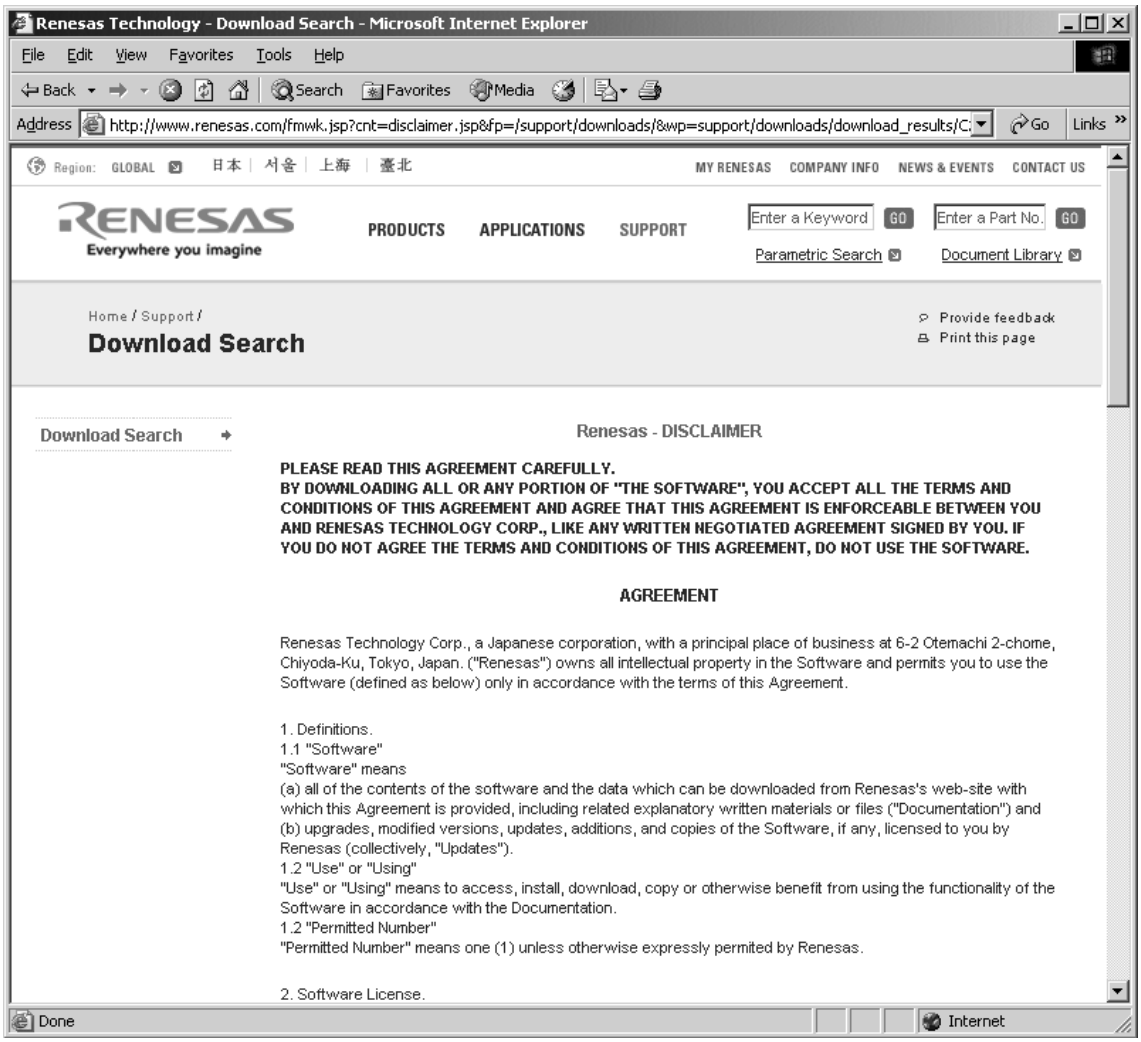

20. Check the **Agree**, and click the **Submit**.

20. **Agree**にチェックを入れ、**Submit**をクリックします。

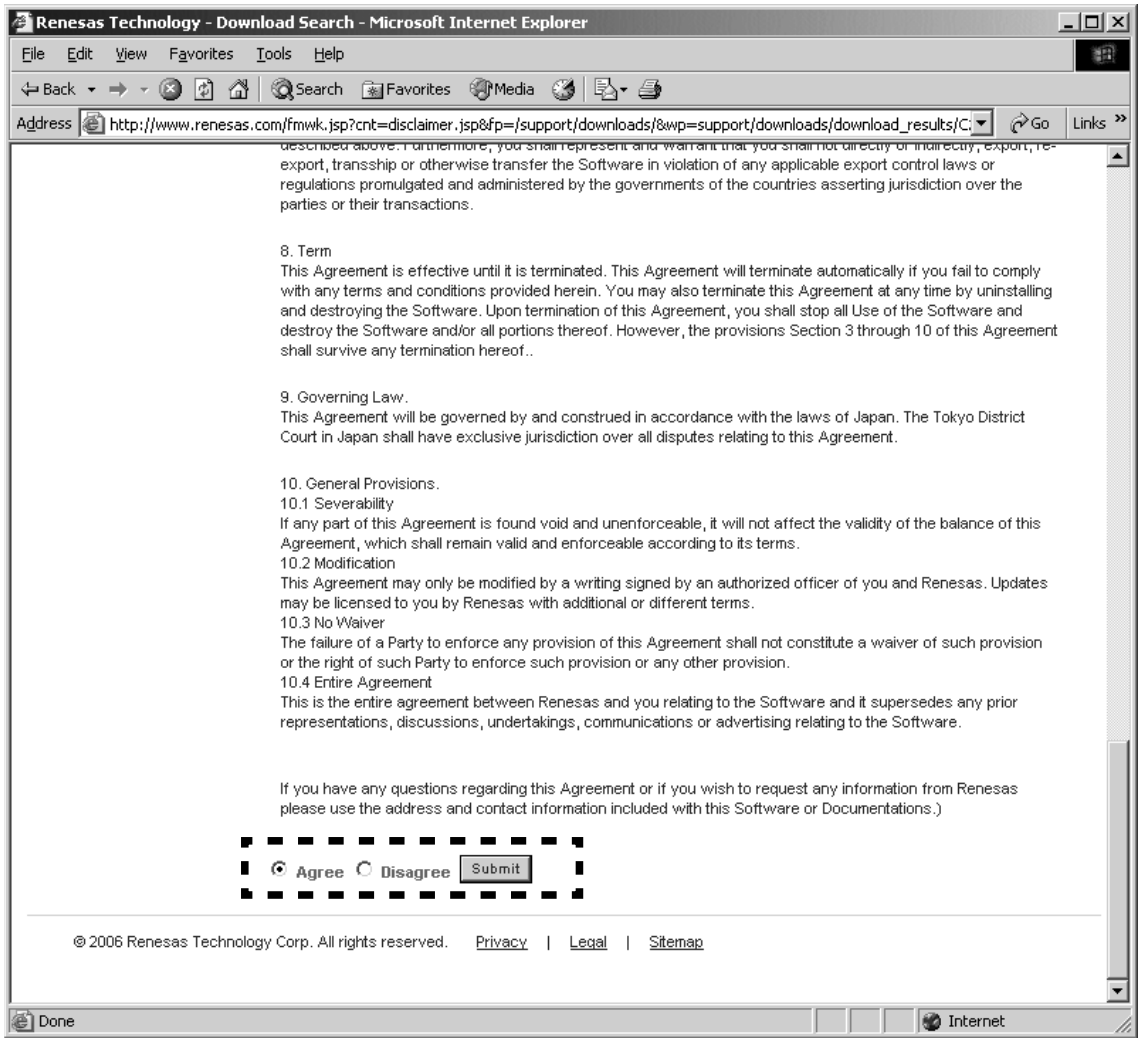

21. Scroll down the page.

21. ページをスクロールダウンします。

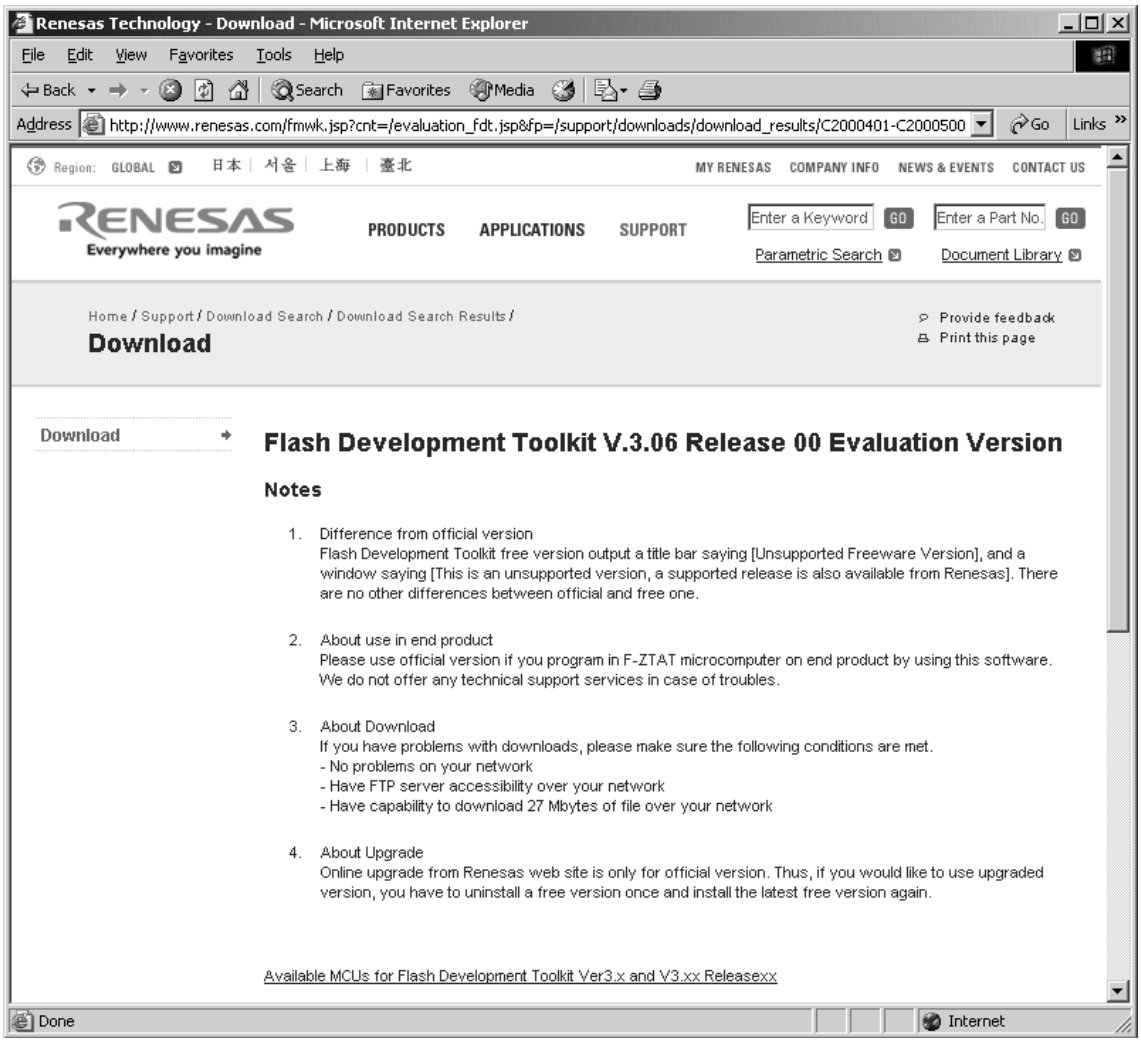

22. Click the **Download**.

22. **Download**をクリックします。

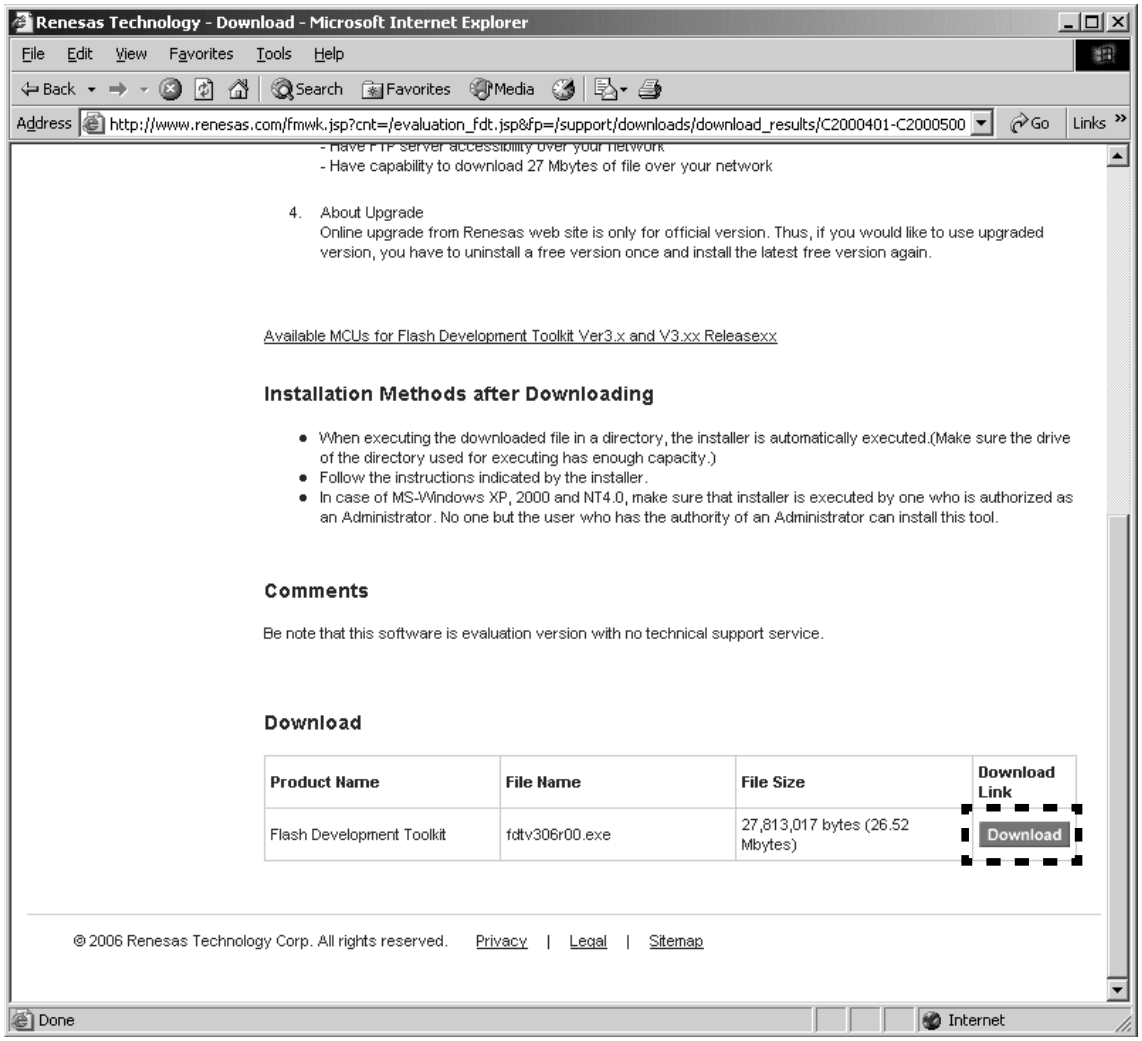

23. Click the **Save**.

23. **Save**をクリックします。

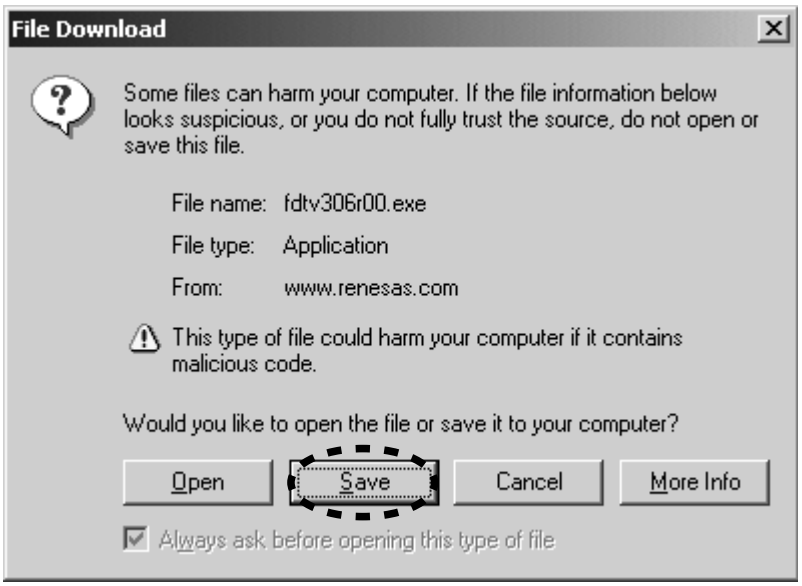

24. Save the fdtv306r00.exe on your PC's hard disc.
NOTE : A file name is change by improvement.

24. fdtv306r00.exeを任意のフォルダに保存します。
注意：ファイル名はバージョンにより変わります。

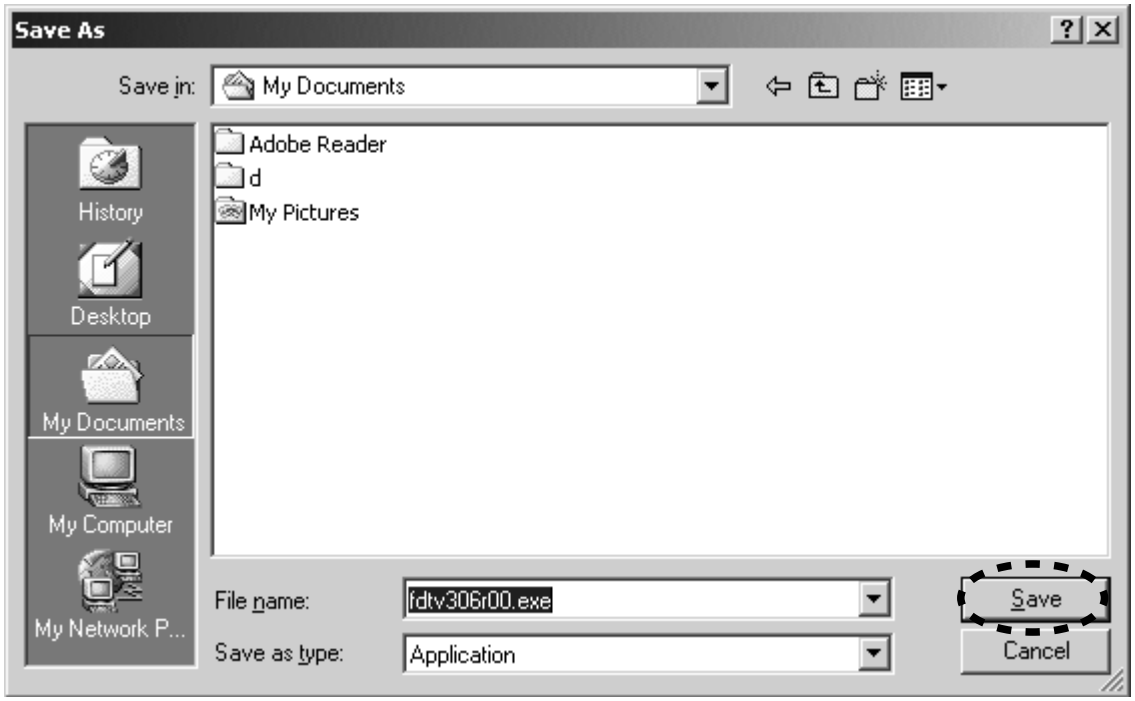

[A-2] INSTALLS OF THE SOFTWARE
(Flash Development Toolkit Ver.3.06)

1. Open the folder with the downloaded file.
2. And double click the **fdtv306r00.exe**.

[A-2] INSTALLS OF THE SOFTWARE
(Flash Development Toolkit Ver.3.06)

1. ダウンロードしたファイルのあるフォルダを開きます。
2. **fdtv306r00.exe**をダブルクリックします。

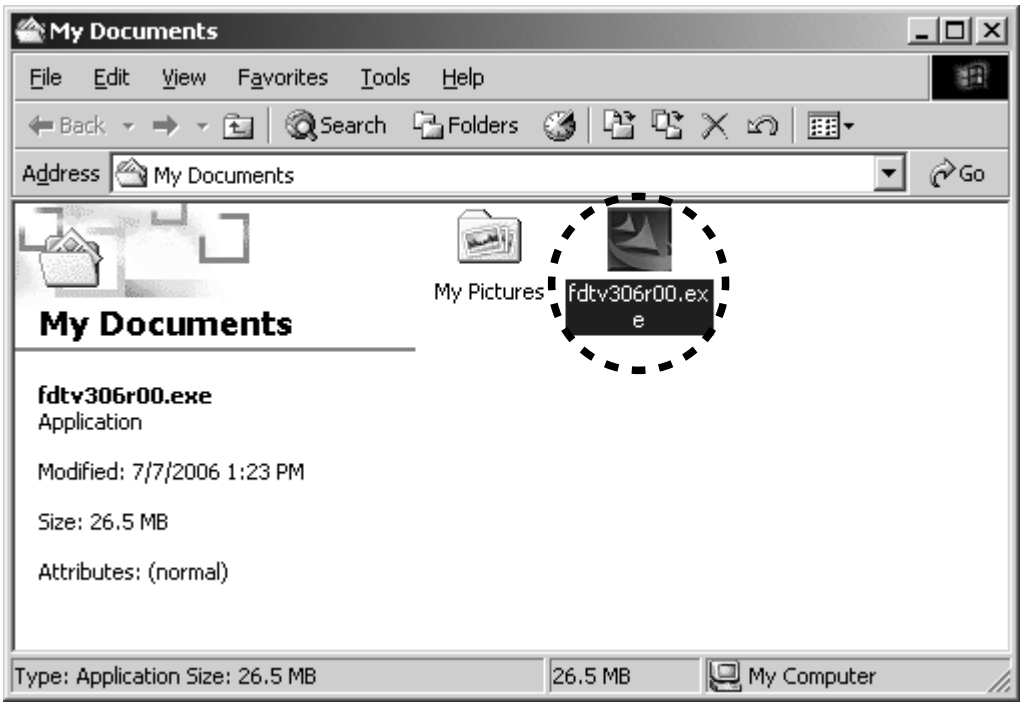

3. Click the **Next**.

3. **Next**をクリックします。

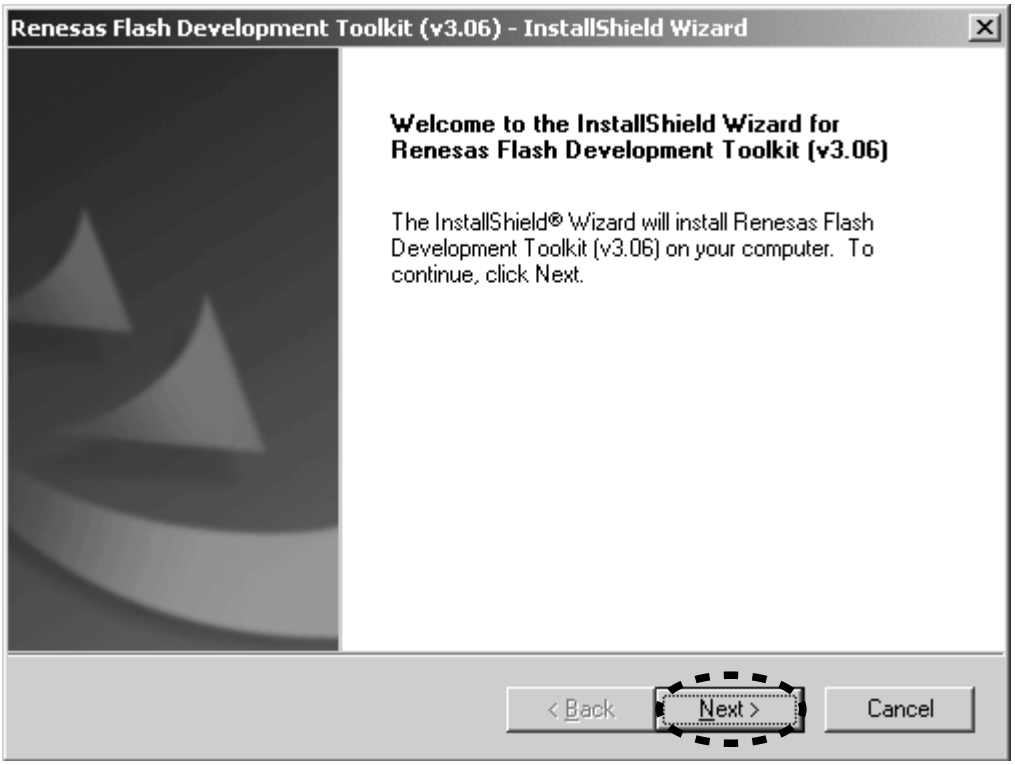

4. Check the **International [English]**, and click the **Next**.

4. **International [English]**にチェックを入れ**Next**をクリックします。

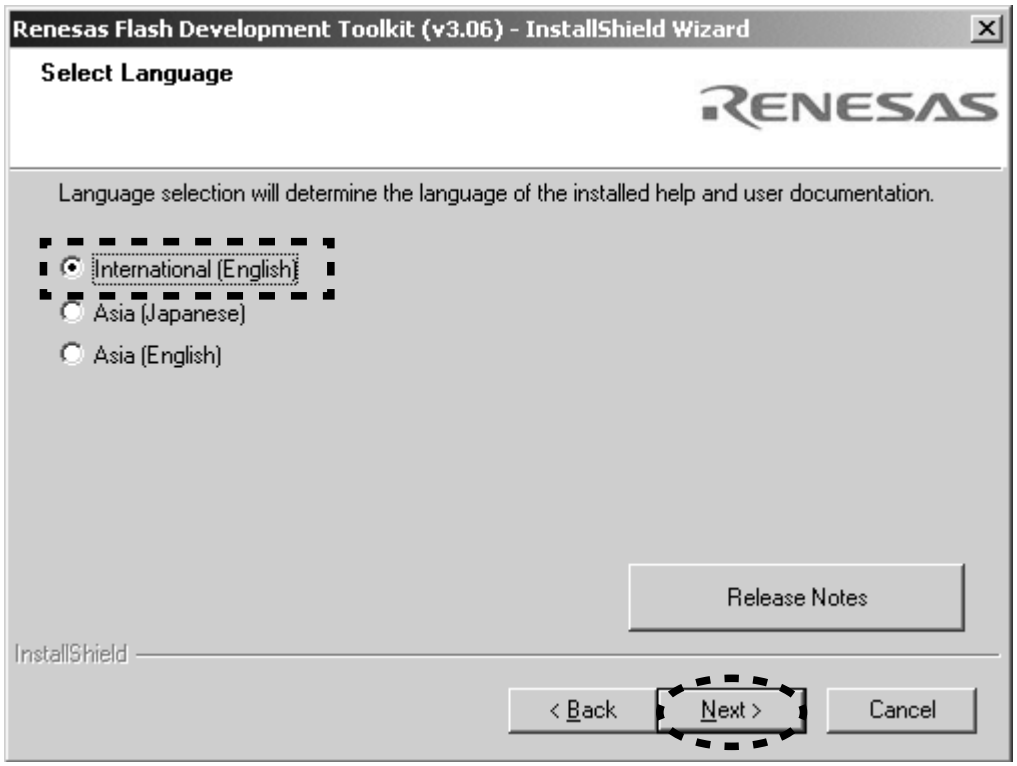

5. Check the **I accept the terms of the license agreement**, and Click the **Next**.

5. **I accept the terms of the license agreement**にチェックを入れ、**Next**をクリックします。

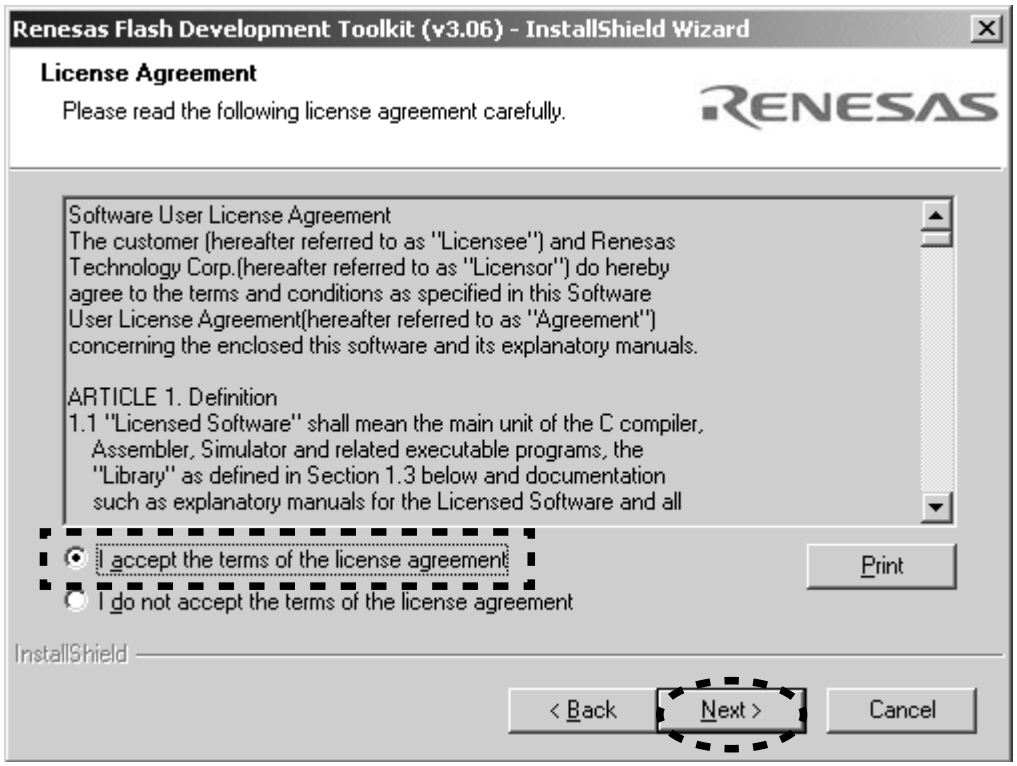

6 Click the **Next**.

6. **Next**をクリックします。

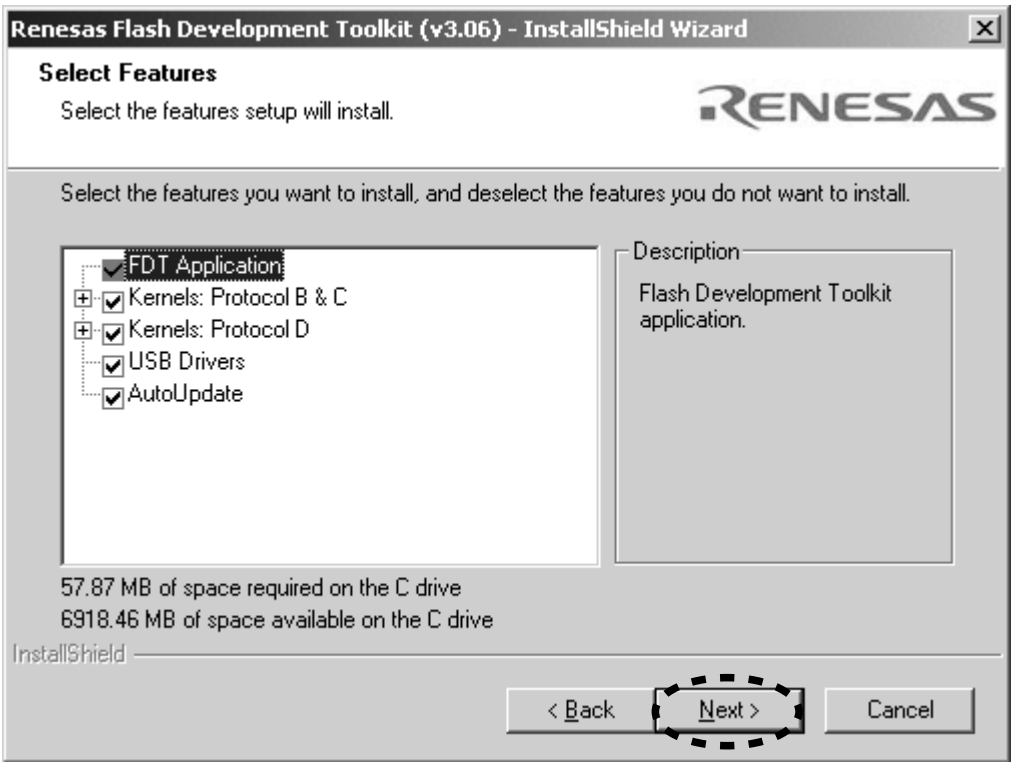

7. Check the all file type, and Click the **Next**.

7. 全てのファイルタイプにチェックを入れ、**Next**をクリックします。

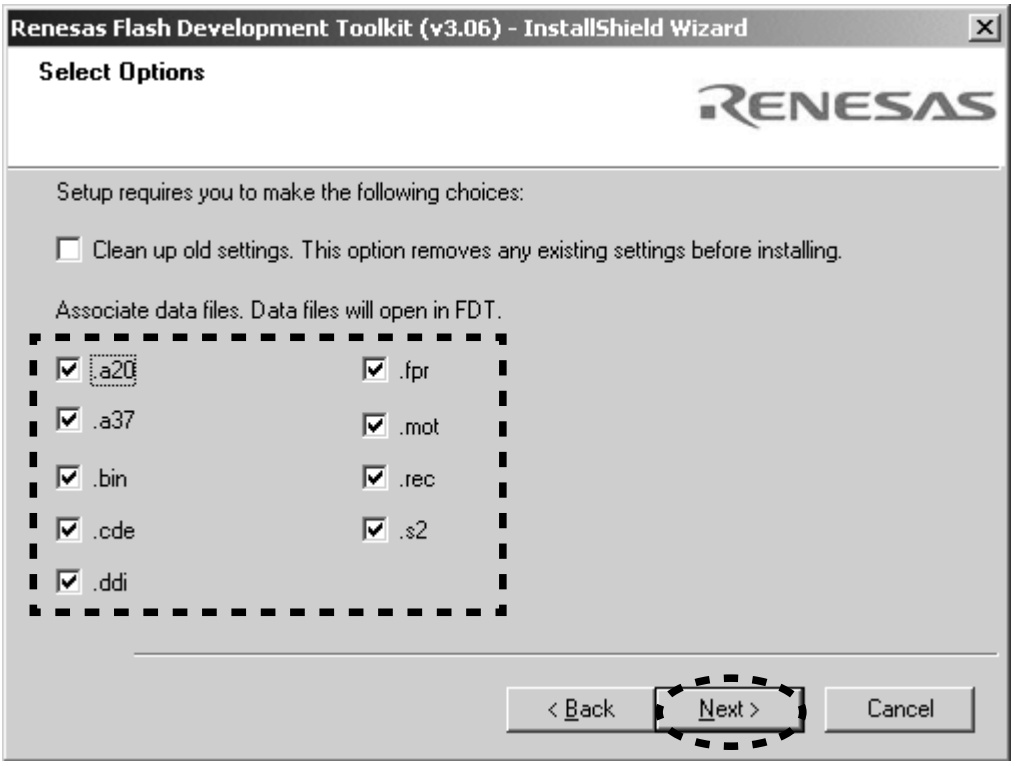

8. Click the **Next**.

8. **Next**をクリックします。

9. Click the **Install**.

9. **Install**をクリックします。

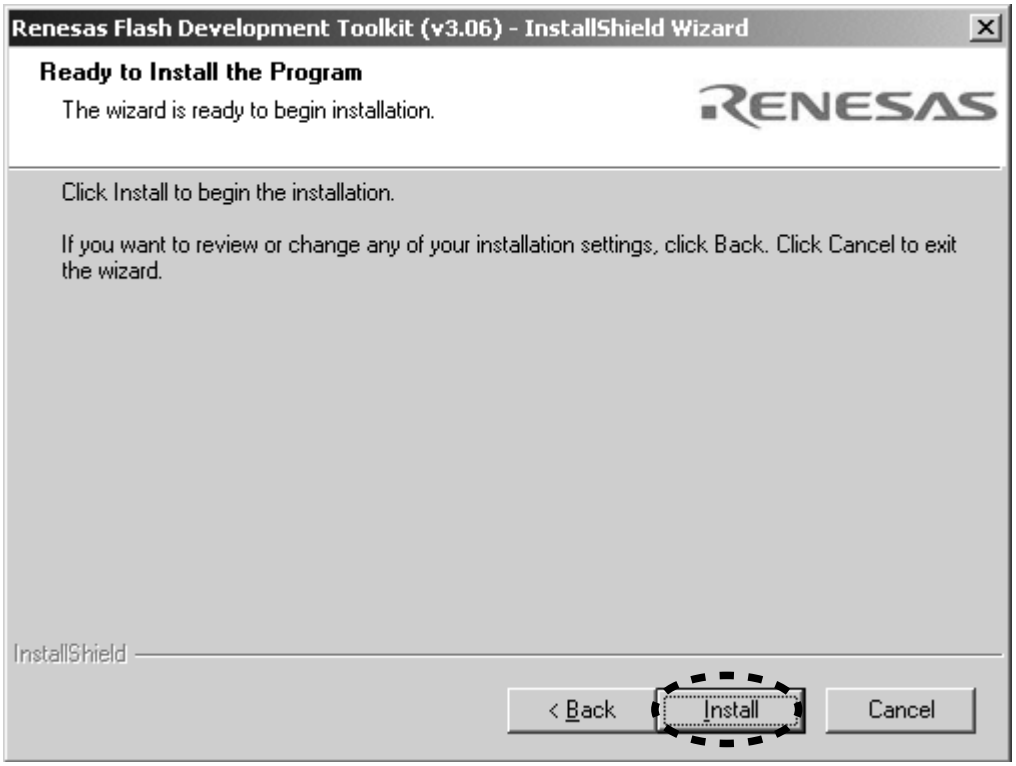

10. The Setup Status bar appears.

10. インストールの状態が表示されます。

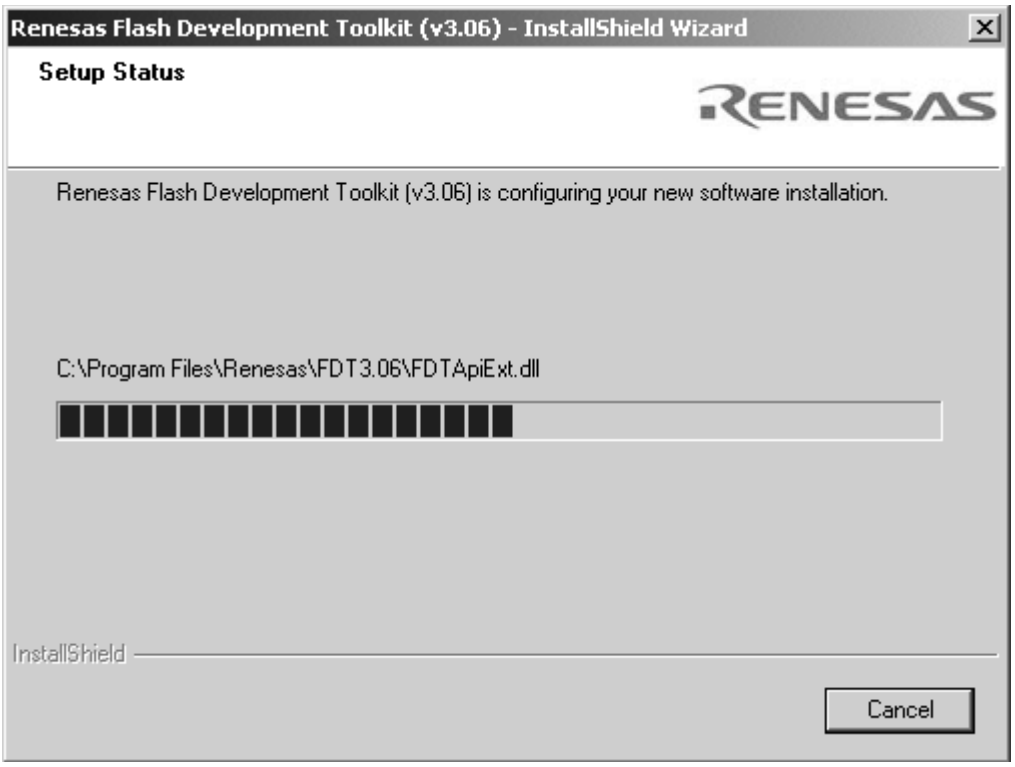

11. Click the **Finish**.

11. **Finish**をクリックします。

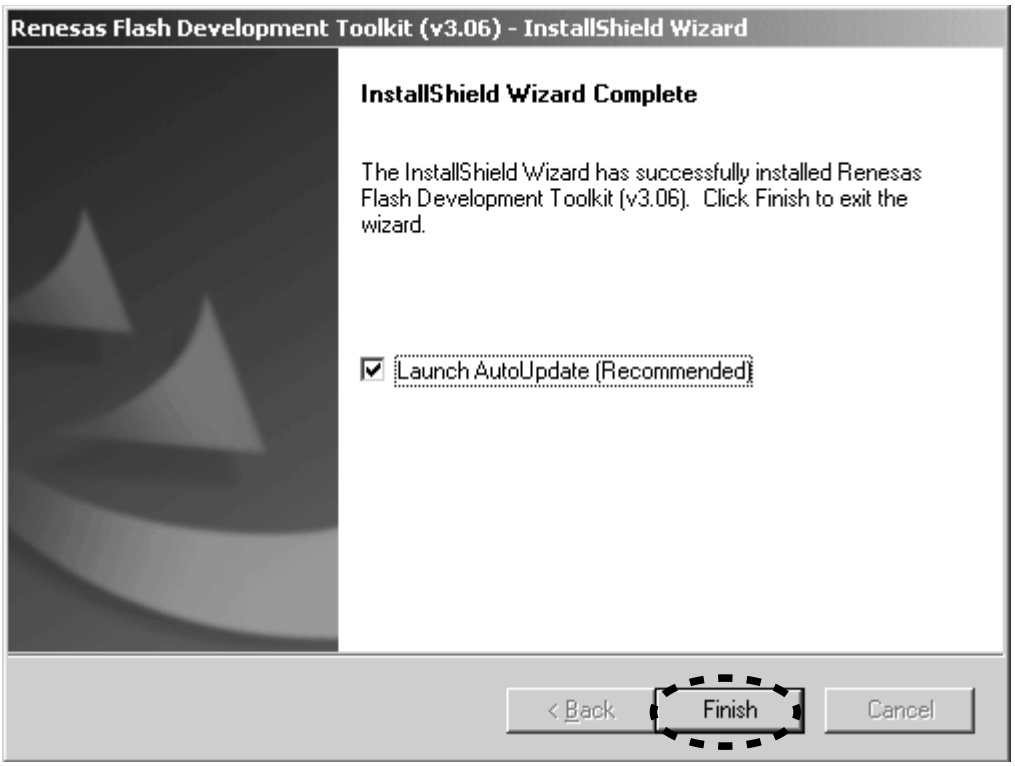

12. Click the **OK**.

12. **OK**をクリックします。

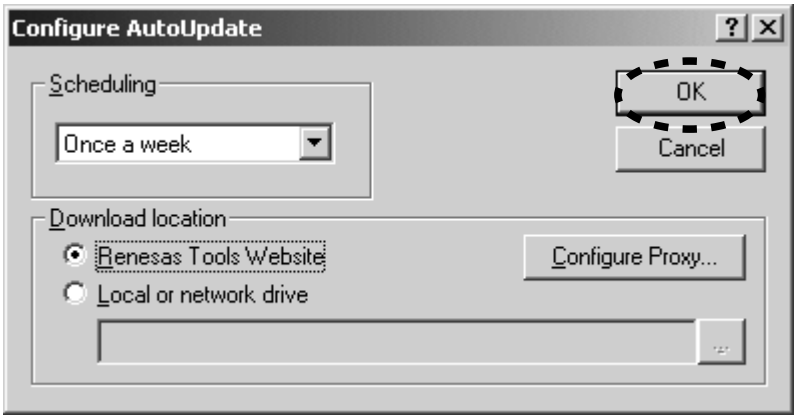

[B] WRITING AND UPDATE SOFTWARE

Software for MAIN CPU, flash ROM for DSP and HDMI CPU can be updated/downloaded.

Have update/download application software. ("H8Download.exe", "da708_writer.exe" and "fdtv306r00.exe (FDT3.06) or latest version")

There are three mode of download, regarding to the target of software as bellow.

Mode 1: Update/Download MAIN CPU's software to internal Flash-ROM.

This mode is to update/download the software for MAIN CPU.
The target devise is internal flash ROM of CPU (IC17) on CUP11872Z (DSP PWB).
The unit needs to be set to writing condition, by pushing internal switch from rear panel.
The updating of software takes about 2 minutes and 30 seconds.

Mode 2: Update/Download DSP's software to 8M Flash-ROM.

This mode is to update/download the software for DSP.
The target devise is 8M Flash-ROM (IC34) on CUP11872Z (DSP PWB).
The unit needs to be set writing condition, by three front buttons.
The updating of software takes about 2 minutes.

Mode 3: Update/Download HDMI CPU's software to internal Flash-ROM.

This mode is to update/download the software for HDMI CPU.
The target devise is internal flash ROM of CPU (IC90) on CUP11875Z (HDMI PWB).
The unit needs to be set writing condition, by three front buttons.
The updating of software takes about 45 seconds.

NECESSARY EQUIPMENT

The following items are required for updating/downloading.

Windows PC (OS: Windows2000 or WindowsXP) with Serial port.
RS-232C Dsub-9 pin cable (female to female/straight type)
Update software to MAIN CPU. (H8Download.exe, etc... in MAIN folder)
Update software to flash ROM for DSP. (da708_writer.exe, etc... in DSP folder)
Update software to HDMI CPU. (Writing data in HDMI folder)
Flash Development Toolkit 3.06 or latest version (fdtv306r00.exe or latest version)

Use RS232C Dsub-9 pin cable (female to female/straight type) to connect PC and the RS-232C port in rear panel of the unit, when updating/downloading MAIN CPU DSP and HDMI CPU.

[B] WRITING AND UPDATE SOFTWARE

MAINマイコン、DSPのフラッシュROM、およびHDMIマイコンのソフトウェアは更新、および書き込みが出来ます。

更新および書き込みには書き込み用アプリケーションが必要です。("H8Download.exe"、“da708_writer.exe“、"fdtv306r00.exe (FDT3.06)または最新版")

書き込みには下記の3つのモードがあります。

Mode 1: Update/Download MAIN CPU's software to internal Flash-ROM.

このモードはMAINマイコンの更新および書き込み用です。
基板CUP11872Z (DSP PWB)のIC17のマイコン内部のフラッシュROMに書き込みます。
本機のリアパネルから内部スイッチを押し、書き込みモードにする必要があります。
書き込みにかかる時間は約2分30秒です。

Mode 2: Update/Download DSP's software to 8M Flash-ROM.

このモードはDSPのフラッシュROMの更新および書き込み用です。
基板CUP11872Z (DSP PWB)のIC34のフラッシュROMに書き込みます。
本機のフロントボタン3つから書き込みモードにする必要があります。
書き込みにかかる時間は約2分です。

Mode 3: Update/Download HDMI CPU's software to internal Flash-ROM.

このモードはHDMIマイコンの更新および書き込み用です。
基板CUP11875Z (HDMI PWB)のIC90のマイコン内部のフラッシュROMに書き込みます。
本機のフロントボタン3つから書き込みモードにする必要があります。
書き込みにかかる時間は約45秒です。

必要機器

下記は更新および書き込みに必要な機器です。

Windows PC (OS : Windows2000 またはWindowsXP) で Serial ポートのあるもの
RS-232C ストレートケーブル(9Pin メス-9Pin メス)
MAINマイコン用書き込みソフトウェア(MAINフォルダ内H8Download.exe、など)
DSPフラッシュROM用書き込みソフトウェア(DSPフォルダ内da708_writer.exe、など)
HDMIマイコン用書き込みソフトウェア(HDMIフォルダ内書き込み用データ)
Flash Development Toolkit 3.06または最新版 (fdtv306r00.exeまたは最新版)

MAINマイコン、DSPフラッシュROM、HDMIマイコンのソフトウェアを更新および書き込みする場合、RS-232Cケーブルで本機リアパネルのRS232CコネクタとWindows PCのSerialポートを接続します。

Mode 1: Update/Download MAIN CPU's software to internal Flash-ROM

Update/Download software for MAIN CPU (Mode 1)

1. Put the "MAIN" folder into anywhere on your PC's hard disc.

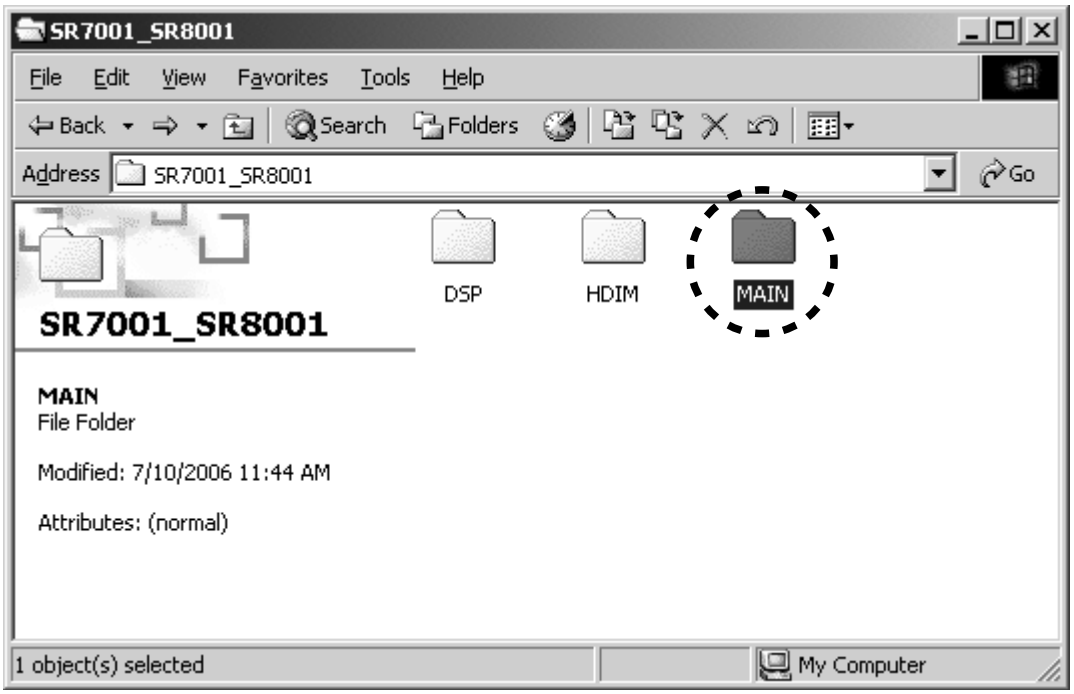

2. Connect RS-232C on the rear panel of the unit and Serial Port of windows PC with RS-232C cable.
3. Insert a thin rot to the hole near the MULTI RC OUT terminal and push the switch (SW10) inside to turn on the switch.

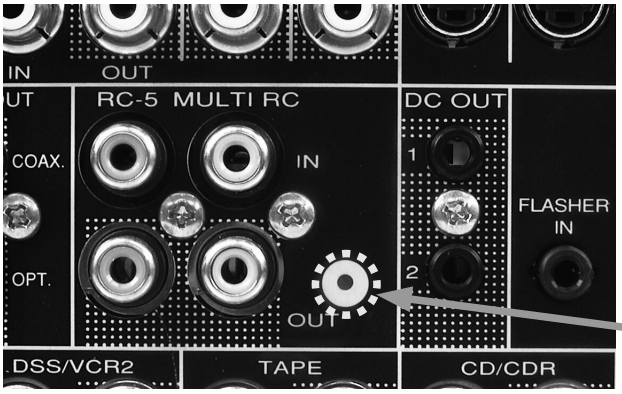

Push switch (SW10)

Hole of rear panel

4. Connect the mains cord into the unit. And press the **POWER ON/STANDBY** button for turn on the unit. (Except U1B)

NOTE : When the unit is into boot mode, STANDBY LED is lights at green.

Mode 1: Update/Download MAIN CPU's software to internal Flash-ROM

Update/Download software for MAIN CPU (Mode 1)

1. "MAIN"フォルダをPCの任意のフォルダにコピーします。
2. 本機のリアパネルにあるRS-232CコネクタとWindows PCのSerialポートをRS-232Cケーブルで接続します。
3. 細い棒を使い本機のMULTI RC OUT端子の右となりにある穴から内部スイッチ(SW10)を押して書き込みモードにします。
4. 本機に電源ケーブルを差し、**POWER ON/STANDBY**ボタンを押して電源を入れます。

注意：本機が書き込みモードになるとSTANDBY LEDが緑色に点灯します。

5. Double click the H8Download.exe. And launch the marantz firmware upgrade program.

5. H8Download.exeをダブルクリックし、marantz firmware upgrade programを起動します。

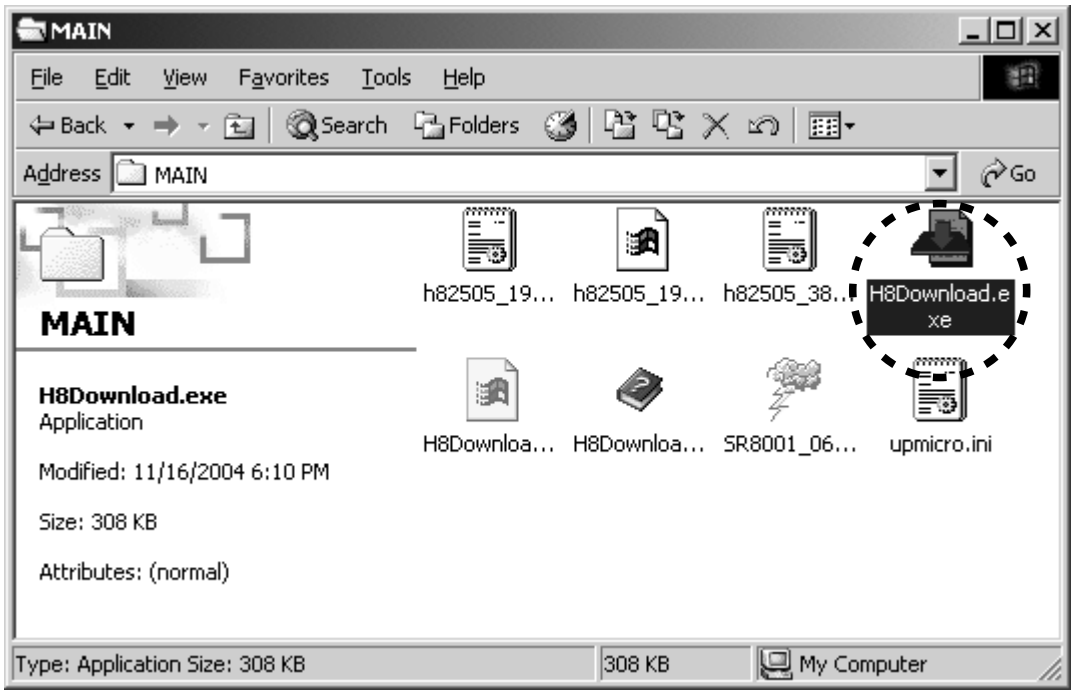

6. Click the **Set Ports**.

6. **Set Ports**をクリックします。

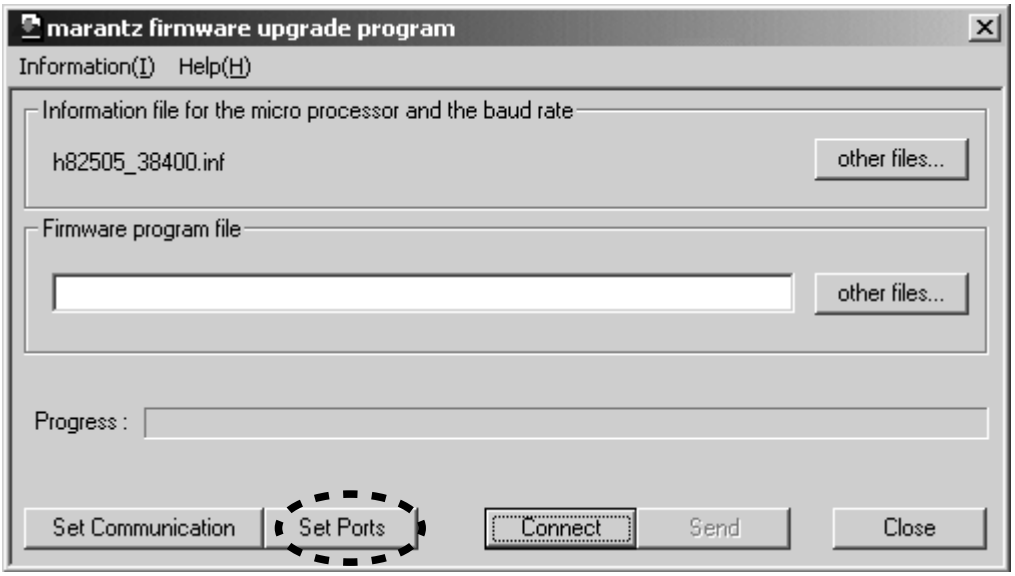

7. Choose the **COM Port number**. And Click the **OK**.

7. 使用する**COMポート番号**を選択し、**OK**をクリックします。

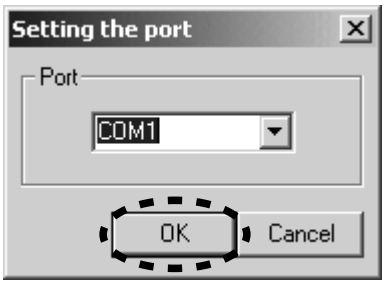

8. Click the **other files...** in the Firmware program file.

8. Firmware program file内の**other files...**をクリックします。

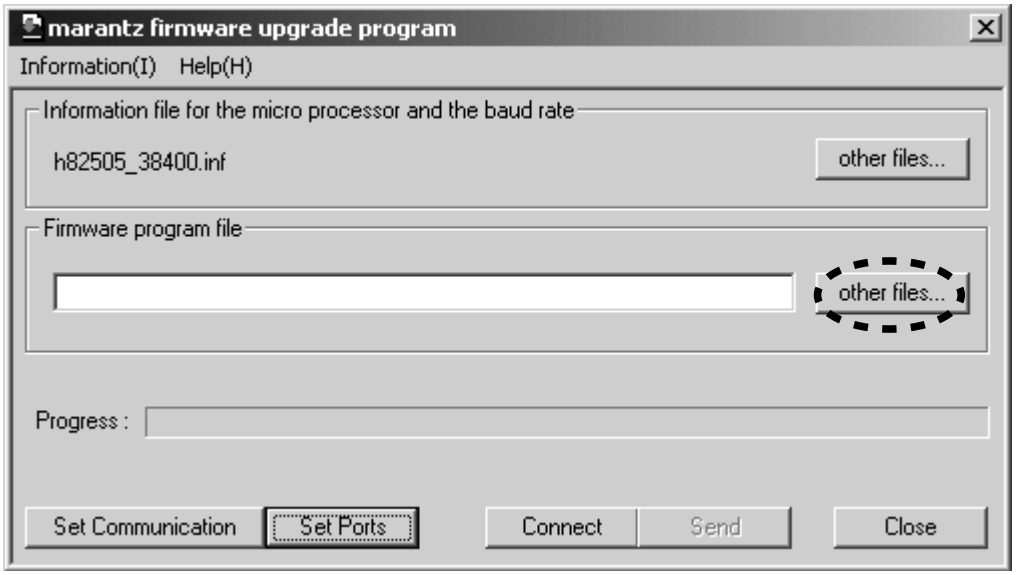

9. Choose the SR8001_yymmddv.mot. And click the **Open**.

NOTE : The yy is two digits of year. The mm is month. The dd is date. The v is release number.

9. SR8001_yymmddv.motを選択し、**Open**をクリックします。

注意：yyは年の下二桁、mmは月、ddは日、vはリリースナンバー

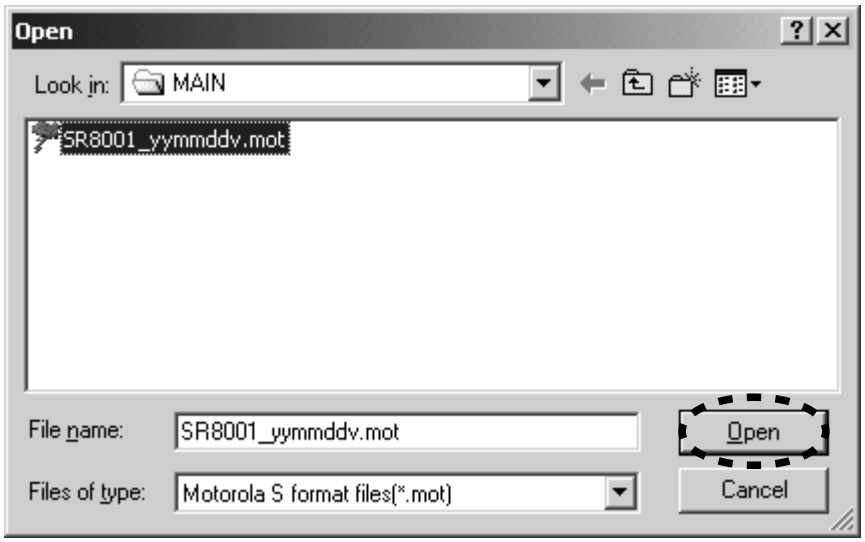

10. Click the **Connect**.

10. **Connect**をクリックします。

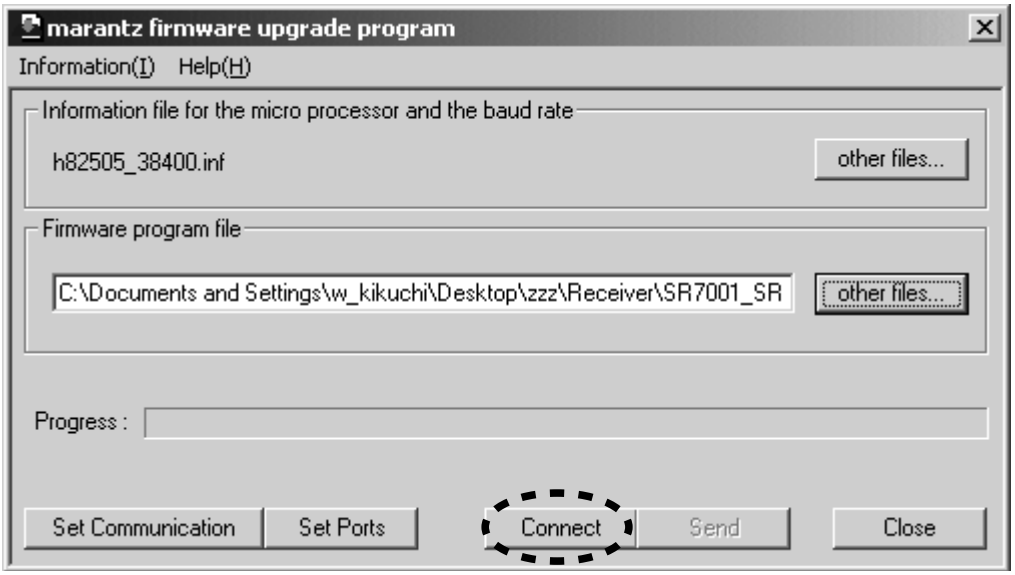

11. If the connection with the H8 μ-P is successfully made, a dialogue box saying "Success to the H8 micro processor connection" appears. If the connection fails, error message will appear.
Click the **OK**.

11. H8マイコンとの接続に成功すると"Success to the H8 micro processor connection"と表示したダイアログボックスが表示されます。接続に失敗するとエラーメッセージが表示されます。
OKをクリックします。

12. Click the **Send** to start update/download.
The writing of software takes about 2 minute and 30 seconds.

12. **Send**をクリックし書き込みを開始します。
書き込みにかかる時間は約2分30秒です。

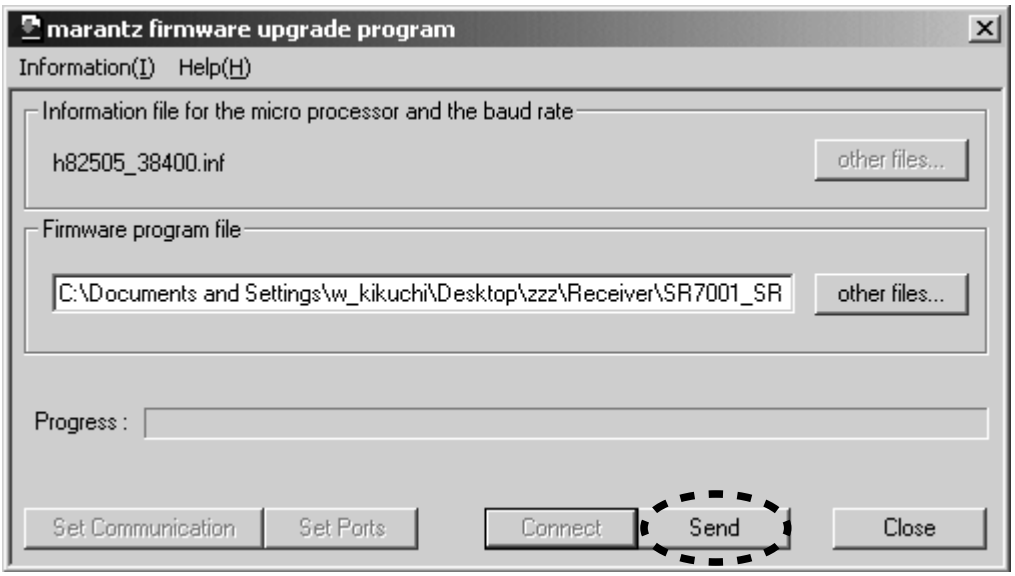

13. If the firmware is updated/downloaded successfully, a dialog box saying "Finished the firmware program sending" appears.
Click the **OK**.

13. 書き込みが成功すると"Finished the firmware program sending"と表示したダイアログボックスが表示されます。
OKをクリックします。

14. Click the **Close** to close the application.

14. **Close**をクリックしアプリケーションを閉じます。

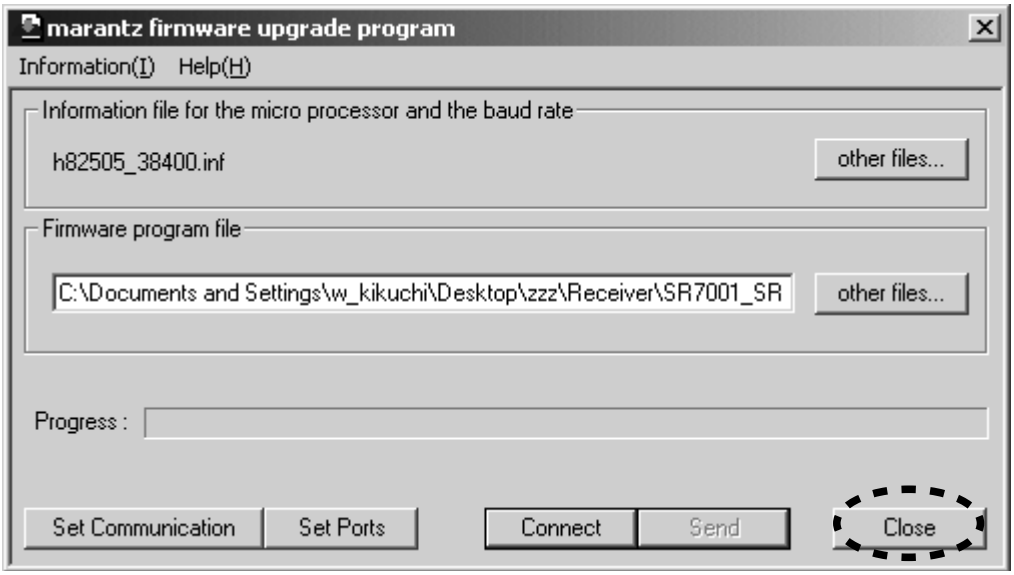

15. Press the **POWER ON/STANDBY** button for turn off the unit. (Except U1B)
16. Disconnect the mains cord and RS-232C cable from the unit.
17. Insert a thin rot to the hole and push the switch (SW10) inside to turn off the switch.

15. **POWER ON/STANDBY**ボタンを押して本機の電源を切ります。
16. 電源ケーブルとRS-232Cケーブルを本機から外します。
17. 細い棒を使い本機のMULTI RC OUT端子の右となりにある穴から内部スイッチ(SW10)を押して書き込みモードを解除します。

Mode 2 : Update/Download DSP's software to 8M Flash-ROM

Update/Download Software for DSP (Mode 2)

1. Put the "DSP" folder into anywhere on your PC's hard disc.

Mode 2: Update/Download DSP's software to 8M Flash-ROM

Update/Download Software for DSP (Mode 2)

1. "DSP"フォルダをPCの任意のフォルダにコピーします。

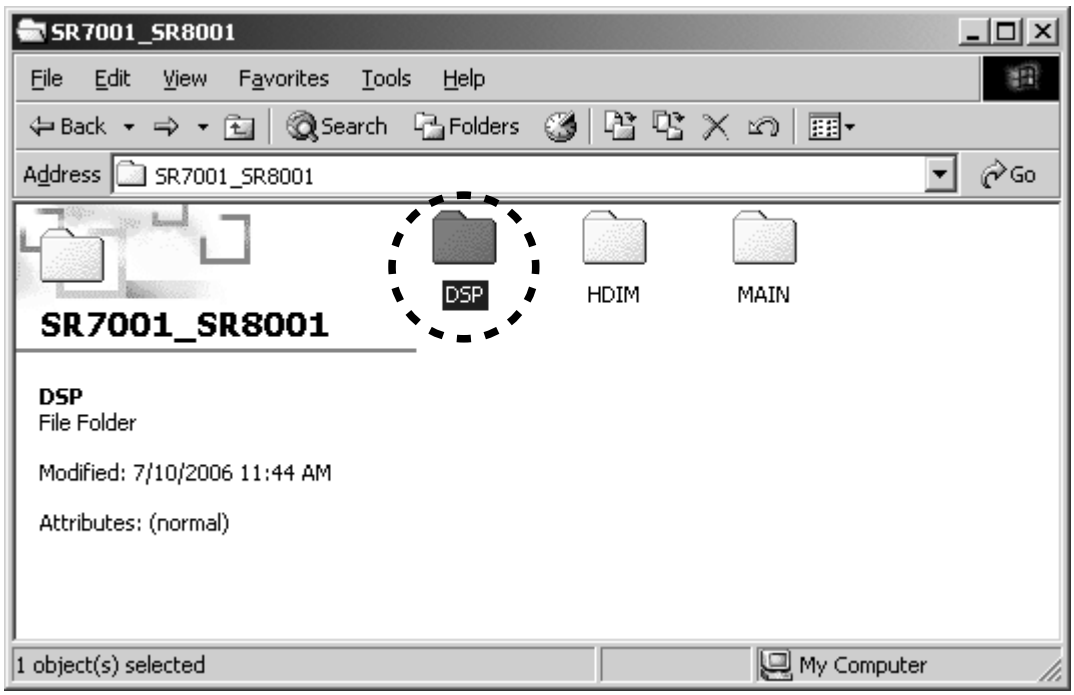

2. Connect the RS-232C on rear panel of the unit and the Serial Port of windows PC with RS-232C cable.
3. Connect the mains cord into the unit.
4. Press the **POWER ON/STANDBY** button for turn on the unit.
5. Press the **ENTER**, **SURROUND MODE** and **T-MODE** buttons simultaneously more than 3 seconds to turn the unit into Loading Mode.
6. The FLD shows "SELECT DSP" after showed "LOADING MODE".
7. Press the **ENTER** button.
8. "SELECTED DSP" shows on the FLD.

2. 本機のリアパネルにあるRS-232CコネクタとWindows PCのSerialポートをRS-232Cケーブルで接続します。
3. 本機に電源ケーブルを差します。
4. **POWER ON/STANDBY**ボタンを押し、本機の電源を入れます。
5. **ENTER**, **SURROUND MODE**, **T-MODE**の3つボタンを同時に3秒以上押し続け、本機をローディングモードにします。
6. FLに"LOADING MODE"と表示された後、"SELECT DSP"と表示されます。
7. **ENTER**ボタンを押します。
8. FLの表示が"SELECTED DSP"に変わります。

9. Double click the da708_writer.exe. And Launch the SR8001 TI Writer.

9. da708_writer.exeをダブルクリックし、SR8001 TI Writerを起動します。

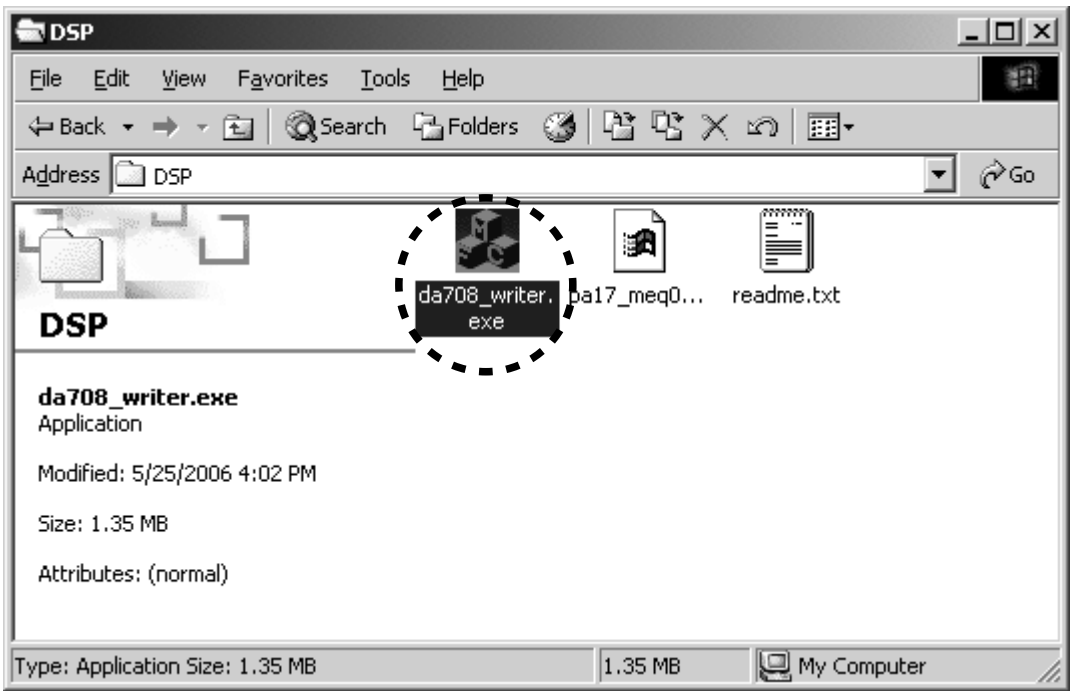

10. Choose the **COM Port number**.

10. 使用する**COMポート番号**を選択します。

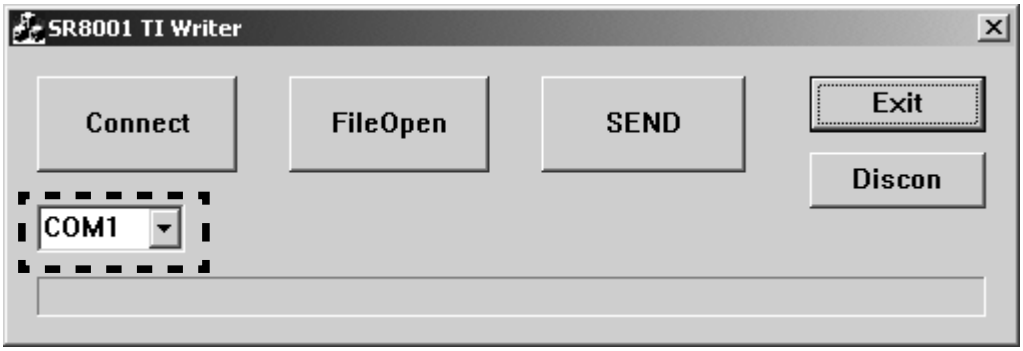

11. Click the **Connect**.

11. **Connect**をクリックします。

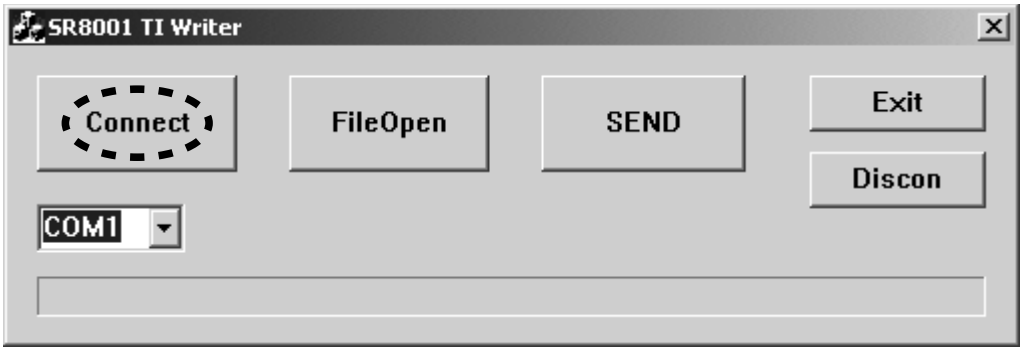

12. "Connection OK!!" appears on SR8001 TI Writer. And click the **FileOpen**.

12. SR8001 TI Writer上に"Connection OK!!"と表示されたら、**FileOpen**をクリックします。

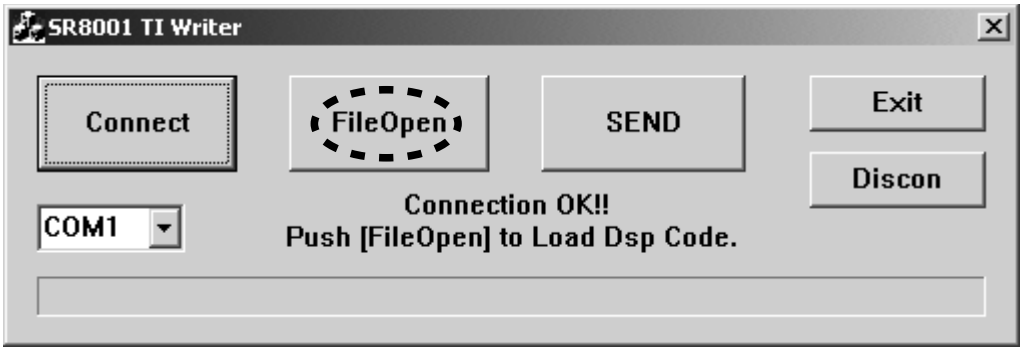

13. Choose the pa17_meqyymmdd_vv.upd. And click the **Open**.

NOTE : The yy is two digits of year. The mm is month. The dd is date. The vv is release number.

13. pa17_meqyymmdd_vv.updを選択し、**Open**をクリックします。

注意：yyは年の下二桁、mmは月、ddは日、vvはリリース番号

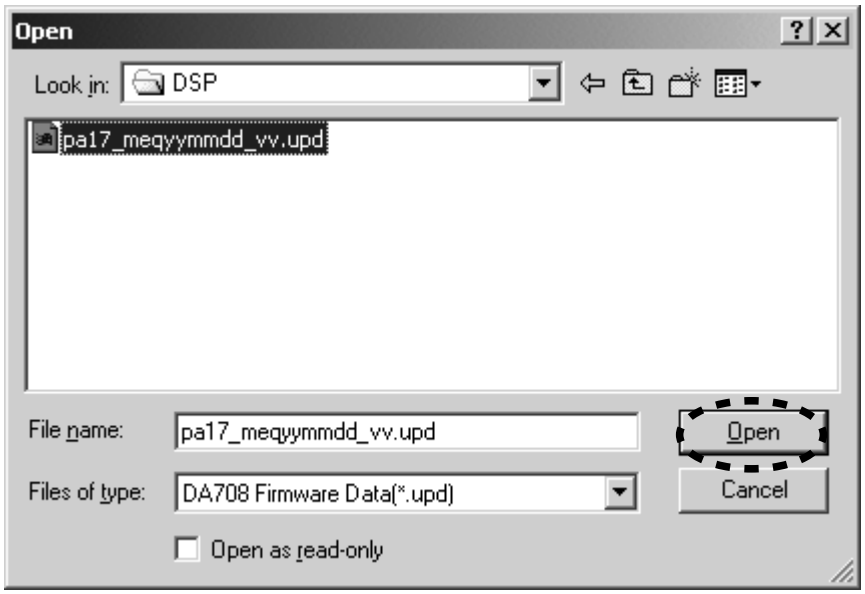

14. Click the **OK**.

14. **OK**をクリックします。

15. Click the **SEND**.

15. **SEND**をクリックします。

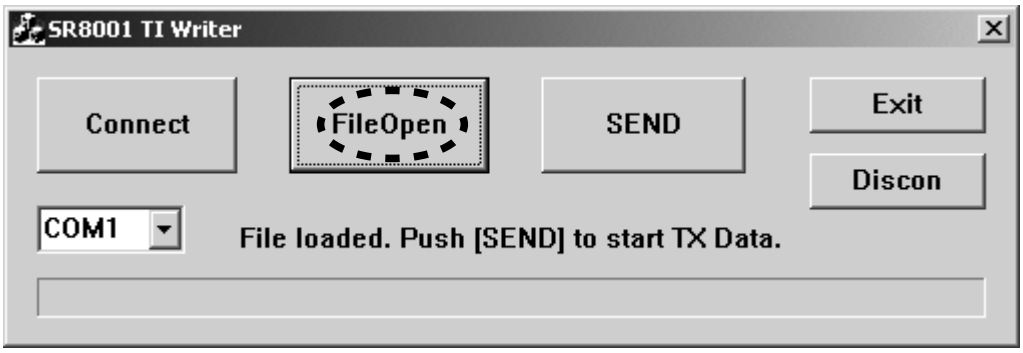

16. Software is written into the DSP Flash ROM.
The writing of software takes about 2 minute.

16. ソフトウェアがDSPフラッシュROMに書き込まれます。
書き込みにかかる時間は約2分です。

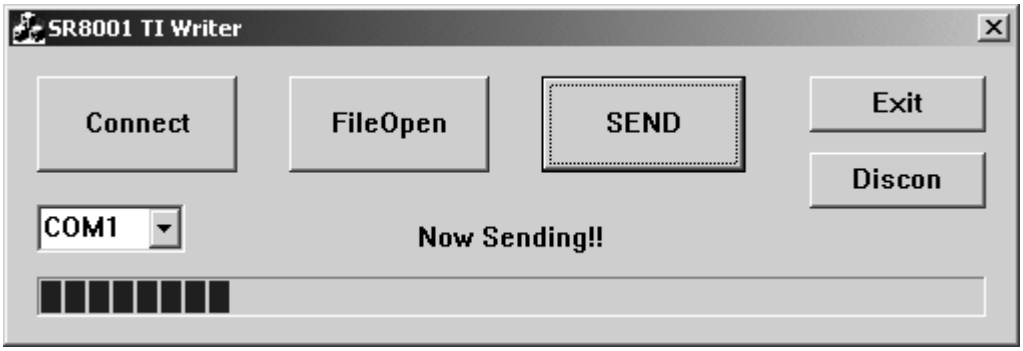

17. Click the **OK**.

17. **OK**をクリックします。

19. Click the **Discon**.

18. **Discon**をクリックします。

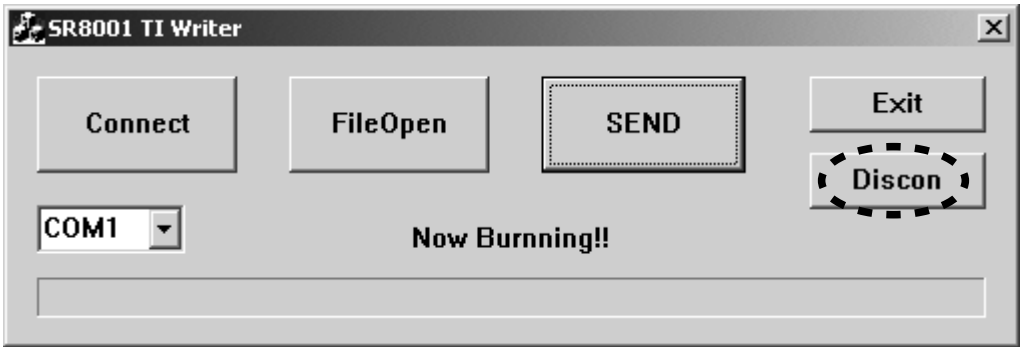

19. Click the **Exit**.

19. **Exit**をクリックします。

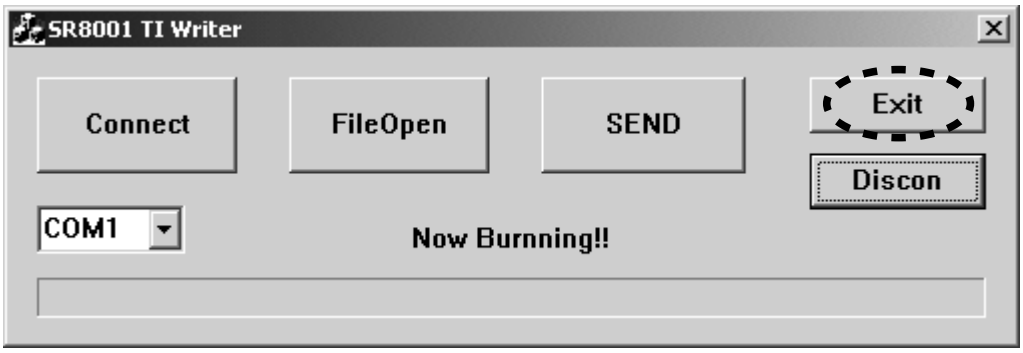

20. Press the P**OWER ON/STANDBY** button for turn off the unit.
21. Disconnect the mains cord and RS-232C cable from the unit.

20. **POWER ON/STANDBY**ボタンを押し、本機の電源を切ります。
21. 本機から電源コードとRS-232Cケーブルを外します。

Mode 3: Update/Download HDMI CPU's software to internal Flash-ROM.

Update/Download software for HDMI CPU (Mode 3)

[M3-1]The writing software setup procedure

1. Launch the Flash Development Toolkit v3.06 (FDT).

NOTE : Please refer to "**[A] SOFTWARE (fdtv306r00.exe) DOWNLOAD AND INSTALL PROCEDURE**", when you do not have FDT.
Can NOT update/download software by FDT ver.3.3.

2. Click **Start**, **Programs**, **Renesas**, **Flash Development Toolkit 3.06** and **Flash Development Toolkit 3.06**.

Mode 3: Update/Download HDMI CPU's software to internal Flash-ROM.

Update/Download software for HDMI CPU (Mode 3)

[M3-1]The writing software setup procedure

1. Flash Development Toolkit v3.06 (FDT)を起動します。

注意：FDTを持っていない方は"**[A] SOFTWARE (fdtv306r00.exe) DOWNLOAD AND INSTALL PROCEDURE**"を参照してダウンロードしてください。
この書き込みはFDT ver.3.3では出来ません。

2. **Start**, **Programs, Renesas, Flash Development Toolkit 3.06, Flash Development Toolkit 3.06**をクリックします。

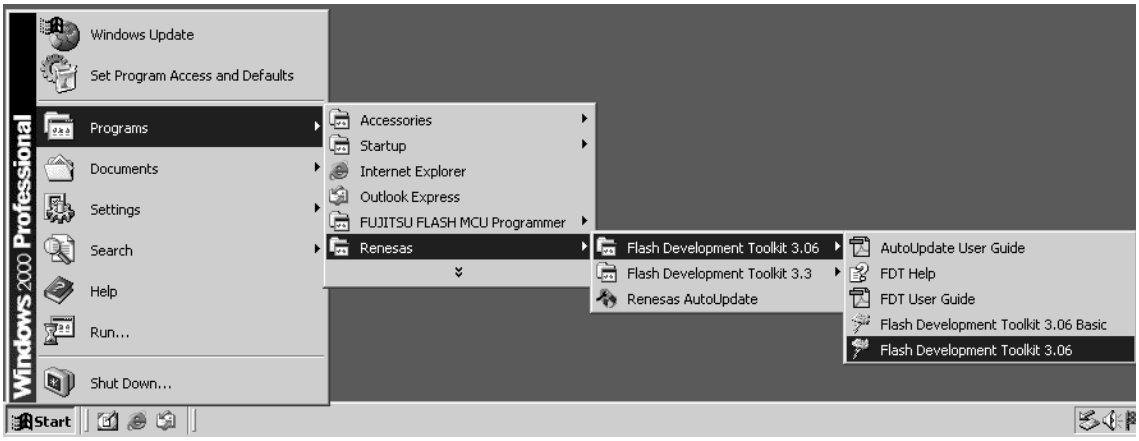

3. Check the **Create a new project workspace**, and click the **OK**.

NOTE : It is needs setup for SR7001/SR8001. When you have already setup, please advance to "**[M3-2] Writing Procedure for HDMI CPU**".

3. **Create a new project workspace**をチェックし、**OK**をクリックします。

注意：SR7001/SR8001用の設定が必要です。既に設定が終わっている方は"**[M3-2] Writing Procedure for HDMI CPU**"へ進んでください。

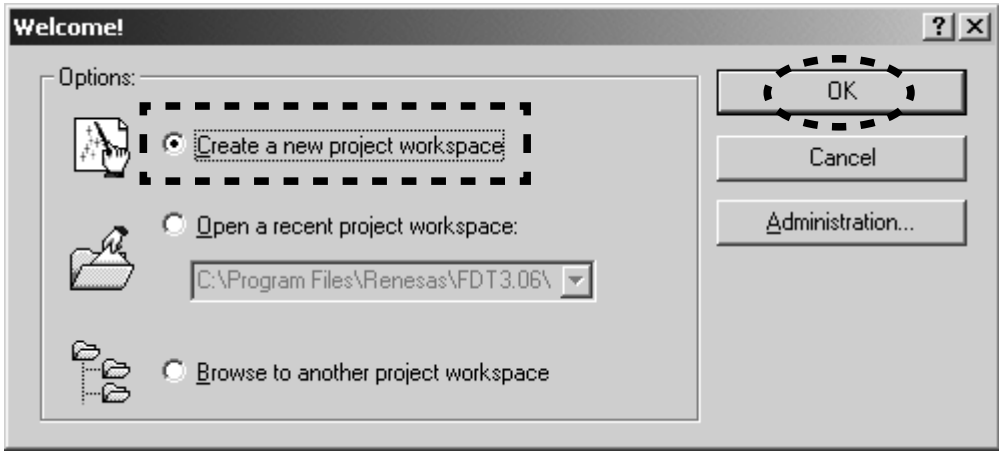

4. **SR8001_HDMI** is inputted into the Workspace Name. (It is simultaneously inputted into Project Name.) Click the **OK**.

4. Workspace Name に**SR8001_HDMI**を入力します。(同時にProject Nameにも入力されます) **OK**をクリックします。

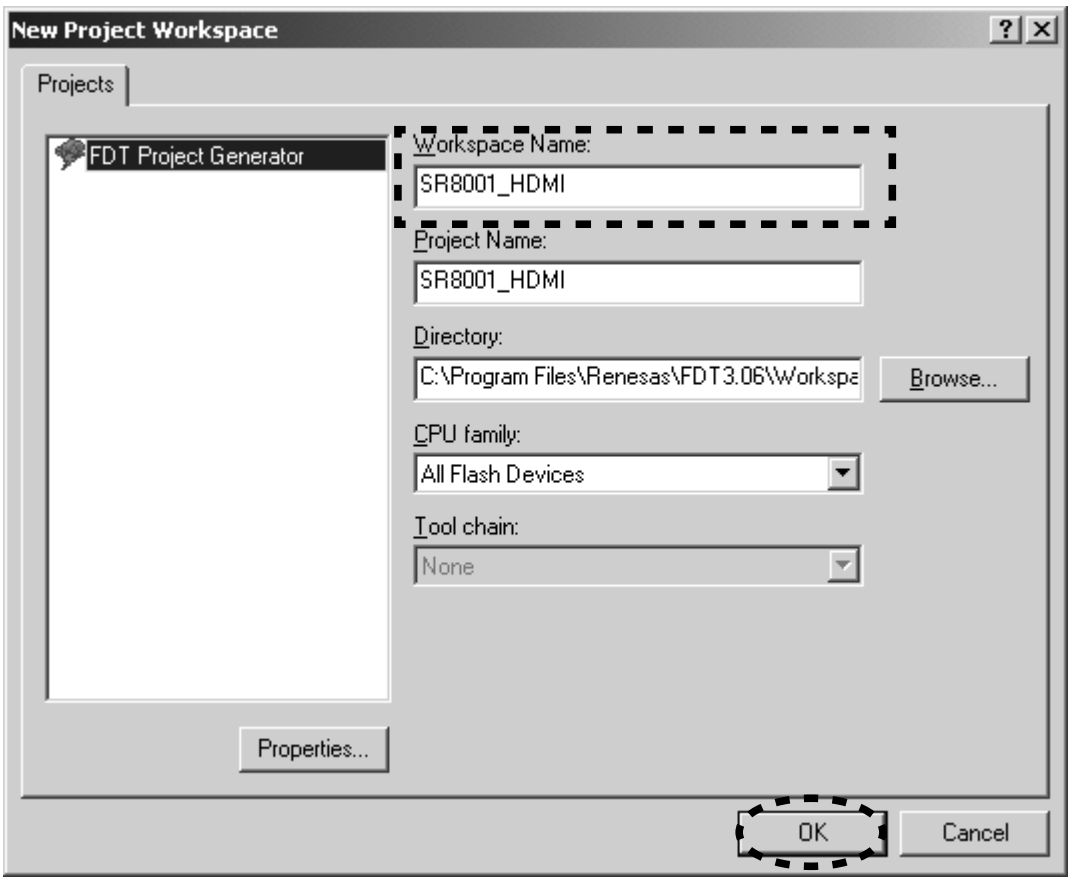

5. Choose the **H8/36087F** in Select Device. And click the **Next**.

5. Select Deviceから**H8/36087F**を選択し、**Next**をクリックします。

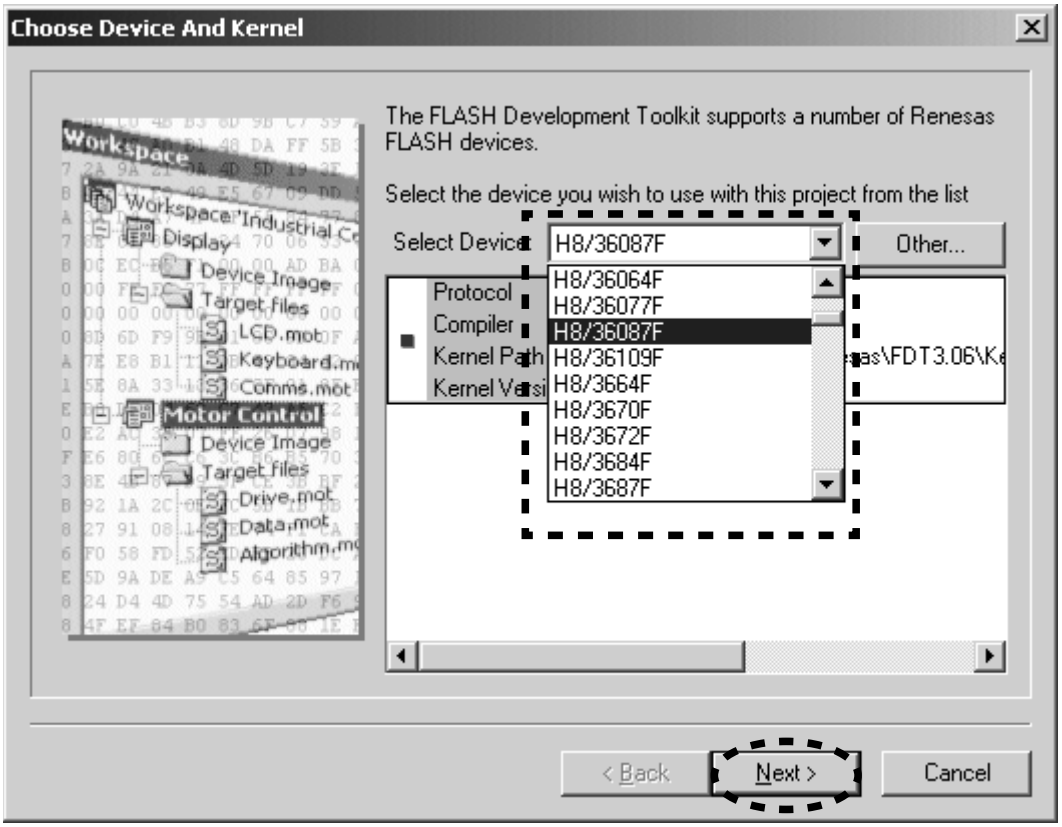

6. Choose the **Serial port number** in the Select Port. And click the **Next**.

6. Select Portから**Serialポート番号**を選び、**Next**をクリックします。

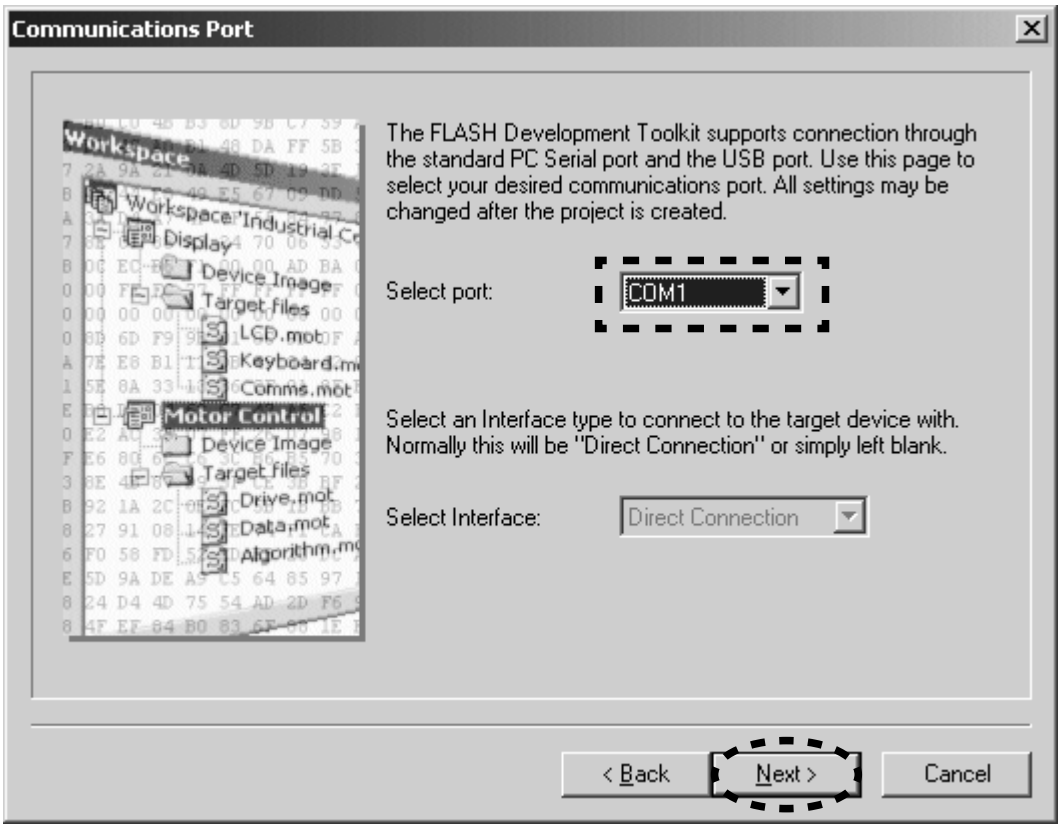

7. **16.0000** is inputted into the Enter the CPU crystal frequency for the selected device. And click the **Next**.

7. Enter the CPU crystal frequency for the selected device に**16.0000**を入力し、**Next**をクリックします。

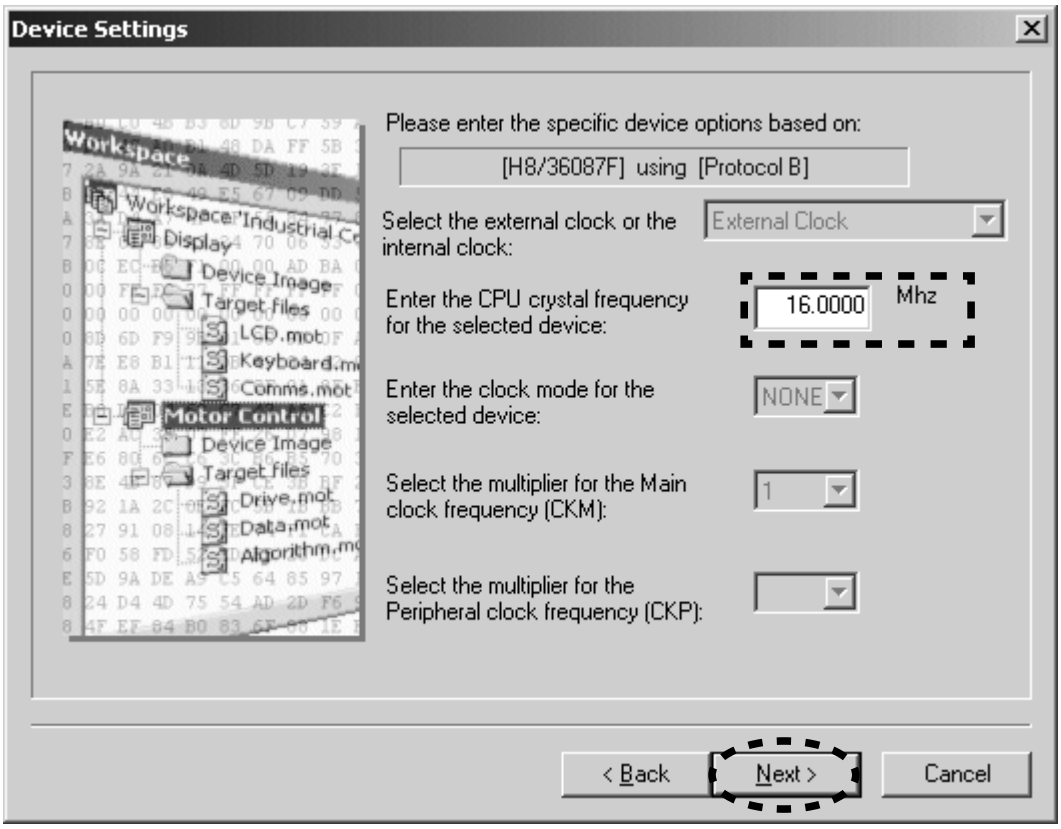

8. Check The **BOOT Mode** in Select Connection.
Un-check the **Use Default**, and choose the **19200** in Recommended Speeds.
Click the **Next**.

8. Select Connectionの**BOOT Mode**をチェックします。
Recommended Speedsの**Use Default**のチェックを外し、**19200**を選択します。
Nextをクリックします。

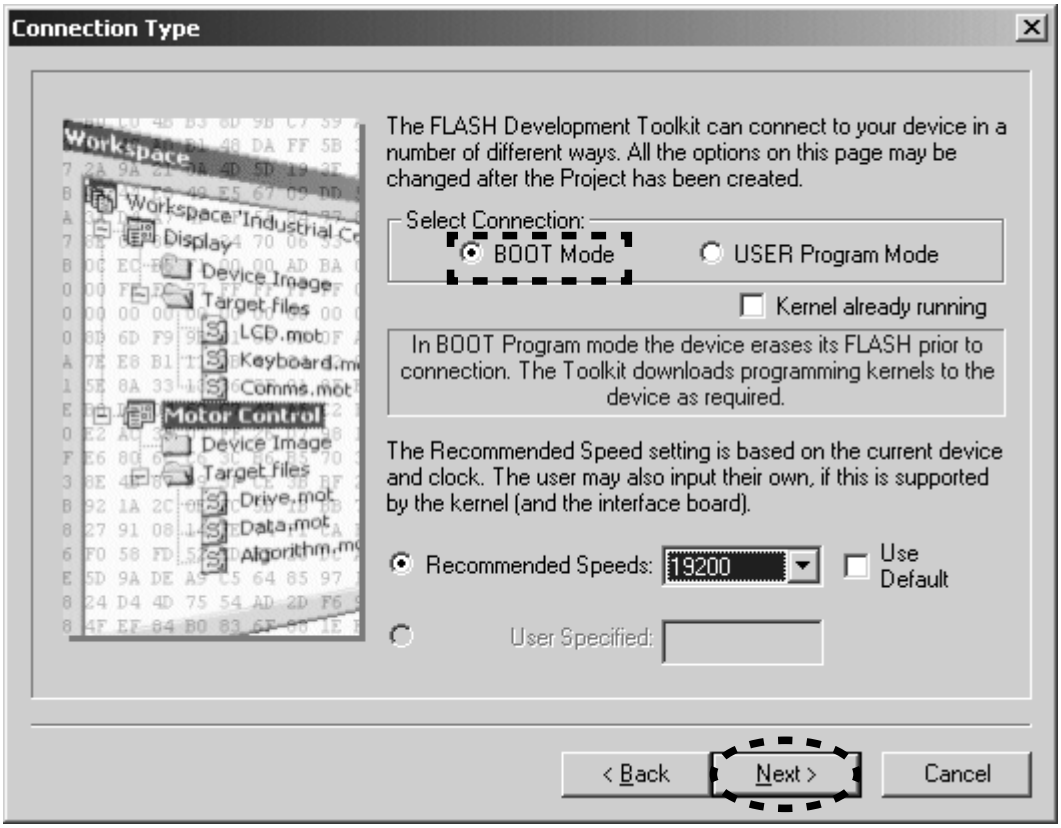

9. Check the **Automatic** in Protection.
Check the **Advanced** in Messaging.
Click the **Finish**.

9. Protectionの**Automatic**をチェックします。
Messagingの**Advanced**をチェックします。
Finishをクリックします。

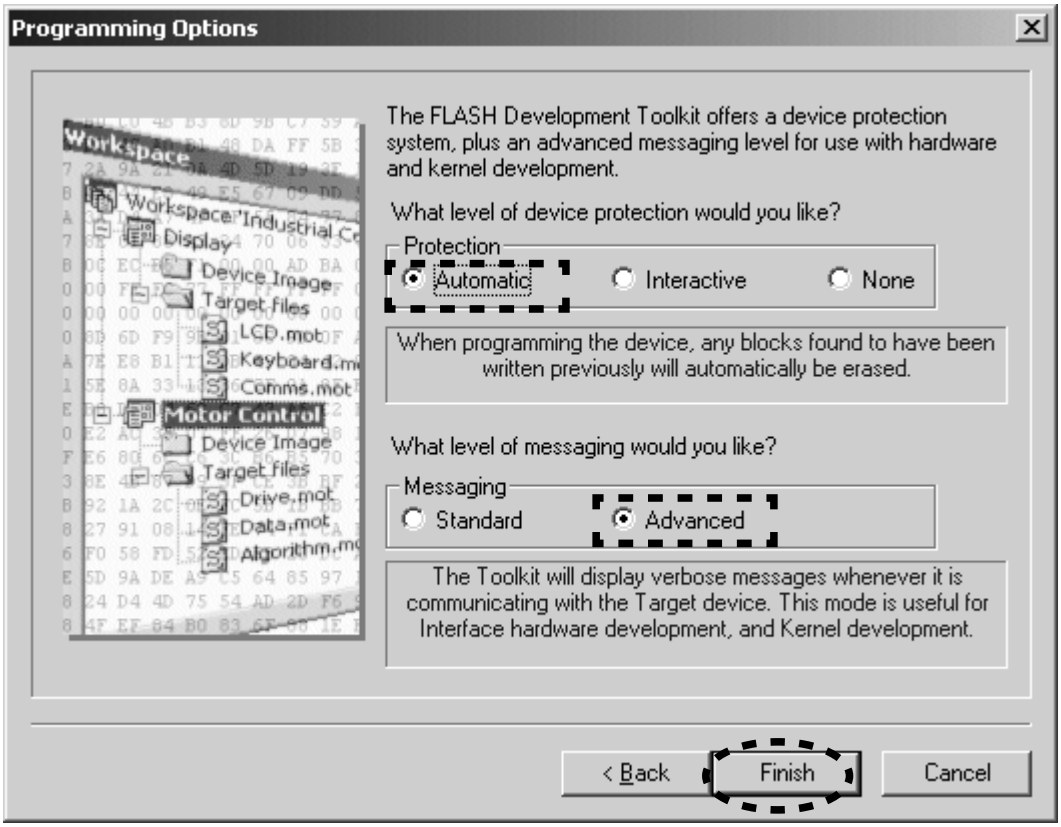

[M3-2]Writing Procedure for HDMI CPU

1. Connect the RS-232C on rear panel of the unit and the Serial Port of windows PC with RS-232C cable.
2. Connect the mains cord into the unit.
3. Launch the Flash Development Toolkit (FDT), When FDT is not launch.
   When FDT is already launch, please advance to step No.7.
4. Click **Start**, **Programs**, **Renesas**, **Flash Development Toolkit 3.06** and **Flash Development Toolkit 3.06**.

[M3-2]Writing Procedure for HDMI CPU

1. 本機のリアパネルにあるRS-232CコネクタとWindows PCのSerialポートをRS-232Cケーブルで接続します。
2. 本機に電源コードを接続します。
3. Flash Development Toolkit v3.06(FDT)を起動していない場合は起動します。
   既にFDTを起動している方はステップ7に進んでください。
4. **Start**, **Programs, Renesas, Flash Development Toolkit 3.06, Flash Development Toolkit 3.06**をクリックします。

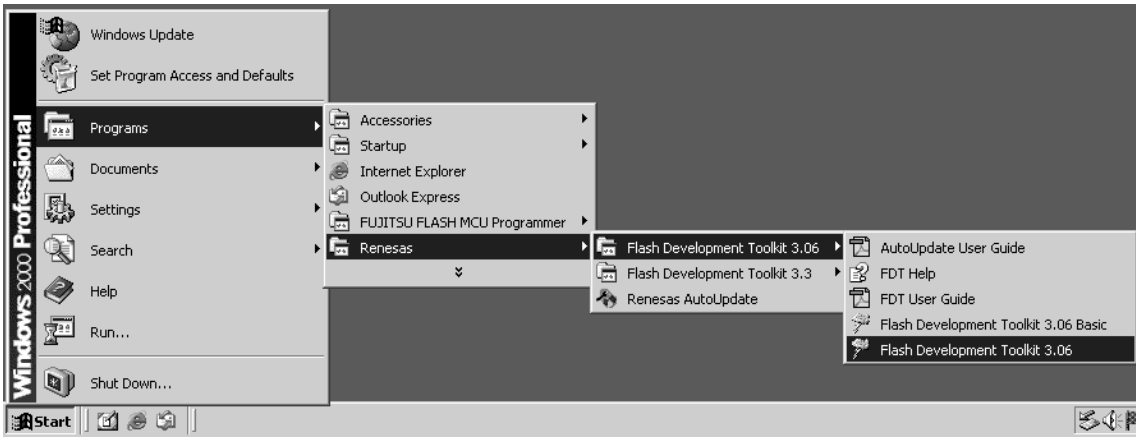

5. Check the **Browse to another project workspace**, and click **OK**.

5. **Browse to another project workspace**をチェックし、**OK**をクリックします。

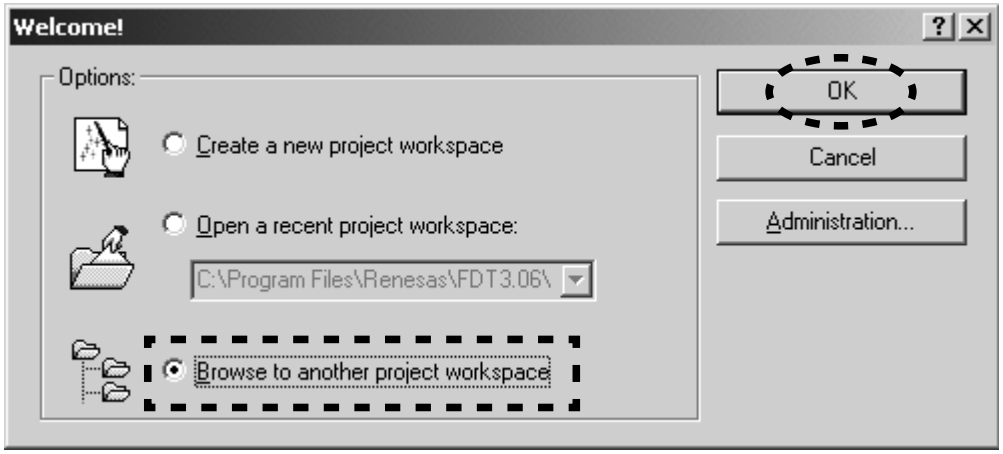

6. Choose **SP8001_HDMI.AWS** in SR8001_HDMI folder under workspase folder. And Click the **Open**.

6. workspaseフォルダの下の**SR8001_HDMI**フォルダ内のSP8001_HDMI.AWSを選択し、**Open**をクリックします。

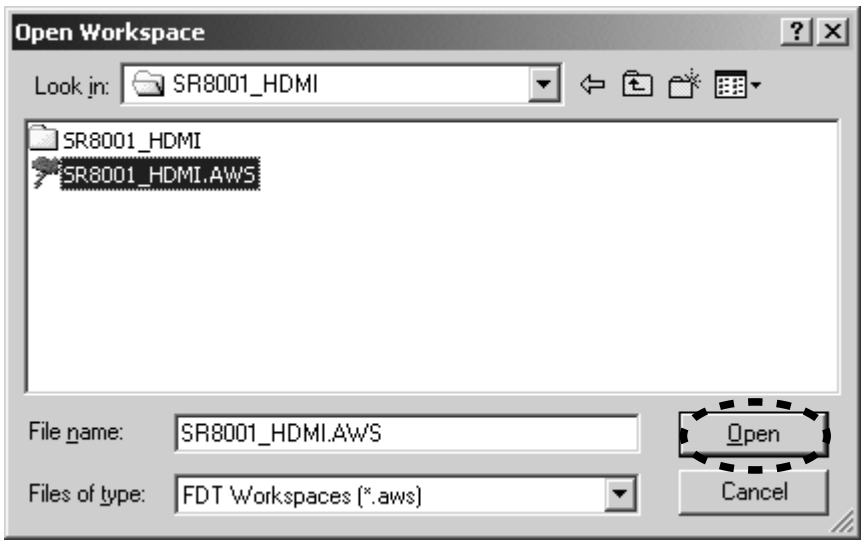

7. Right button of mouse click on the **SR8001_HDMI**, and select the **Add Files...** in a menu.

7. **SR8001_HDMI**を右クリックし、メニューから**Add Files...**をクリックします。

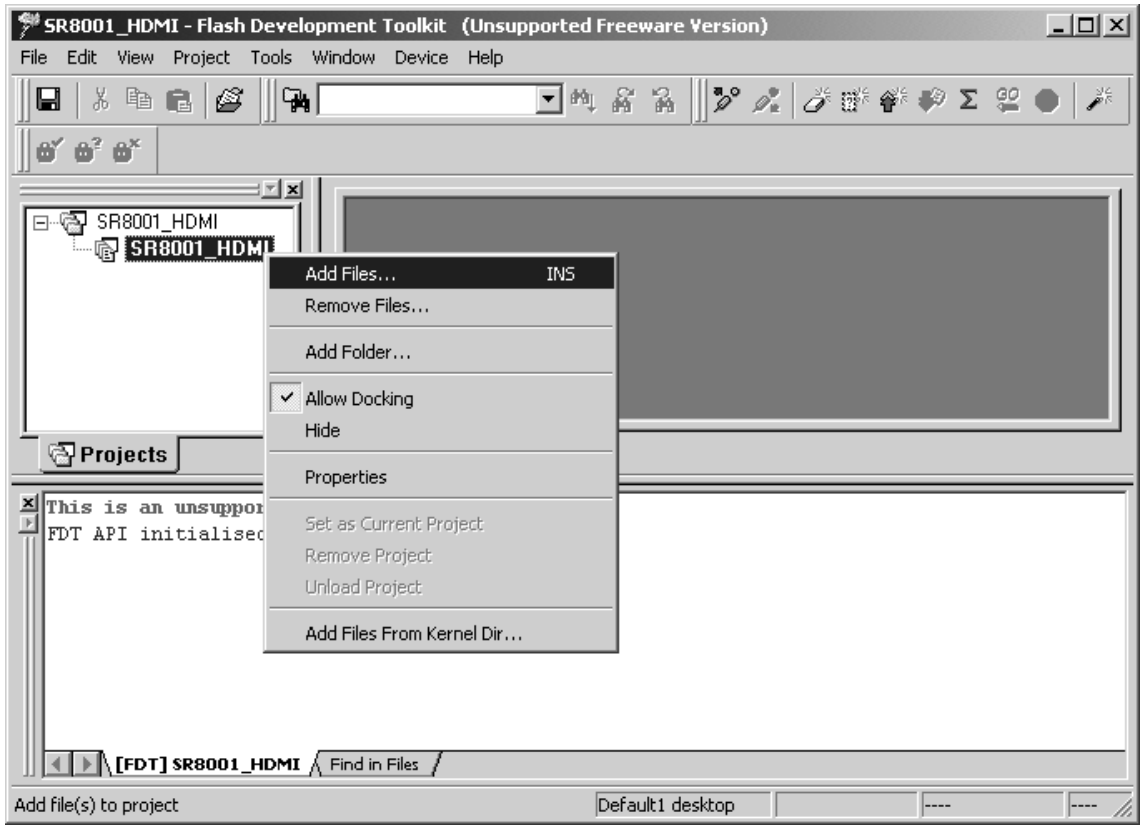

8. Choose the **HDMI_REPV2xyymmddvv.mot**, and click the **Add**.

NOTE : The yy is two digits of year. The mm is month. The dd is date. The vv is release number.

8. **HDMI_REPV2xyymmddvv.mot**を選択し、**Add**をクリックします。

注意：yyは年の下二桁、mmは月、ddは日、vvはリリースナンバー

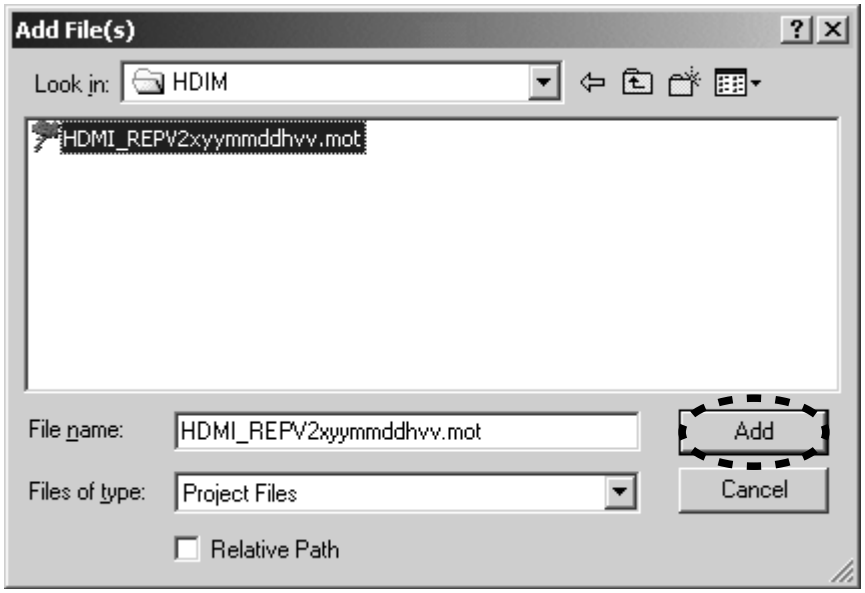

9. Press the **POWER ON/STANDBY** button for turn on the unit.
10. Press the **ENTER**, **SURROUND MODE** and **T-MODE** buttons simultaneously more than 3 seconds to turn the unit into Loading Mode.
11. The FLD shows "SELECT DSP" after showed "LOADING MODE".
12. Turn the **INPUT SELECTOR** to change display from "SELECT DSP" to "SELECT HDMI" on FLD.
13. Press the **ENTER** button.
14. "SELECTED HDMI" shows on the FLD.

9. **POWER ON/STANDBY**ボタンを押し、本機の電源を入れます。
10. **ENTER**, **SURROUND MODE**, **T-MODE**の3つボタンを同時に3秒以上押し続け、本機をローディングモードにします。
11. FLに"LOADING MODE"と表示された後、"SELECT DSP"と表示されます。
12. 本機の**INPUT SELECTOR**を回して、FLの表示が"SELECT DSP"から"SELECT HDMI"に換えます。
13. **ENTER**ボタンを押します。
14. FLの表示が"SELECTED HDMI"に変わります。

15. Click the **Device** in the menu bar and select the **Connect to Device**.

15. **Device**をクリックし、メニューから**Connect to Device**をクリックします。

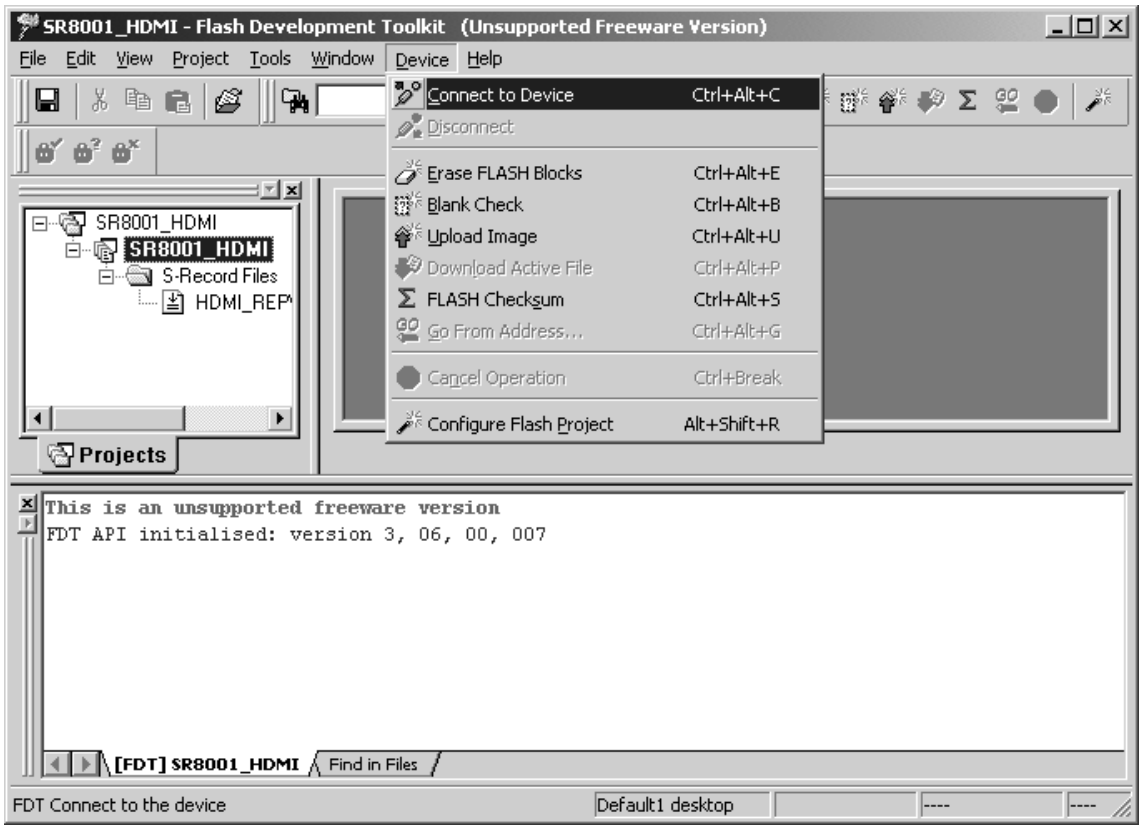

16. Press right button of mouse on the **HDMI_REPV2xyymmddvv.mot**, and select the **Download File** in a menu.

16. **HDMI_REPV2xyymmddvv.mot**を右クリックし、メニューから**Download File**をクリックします。

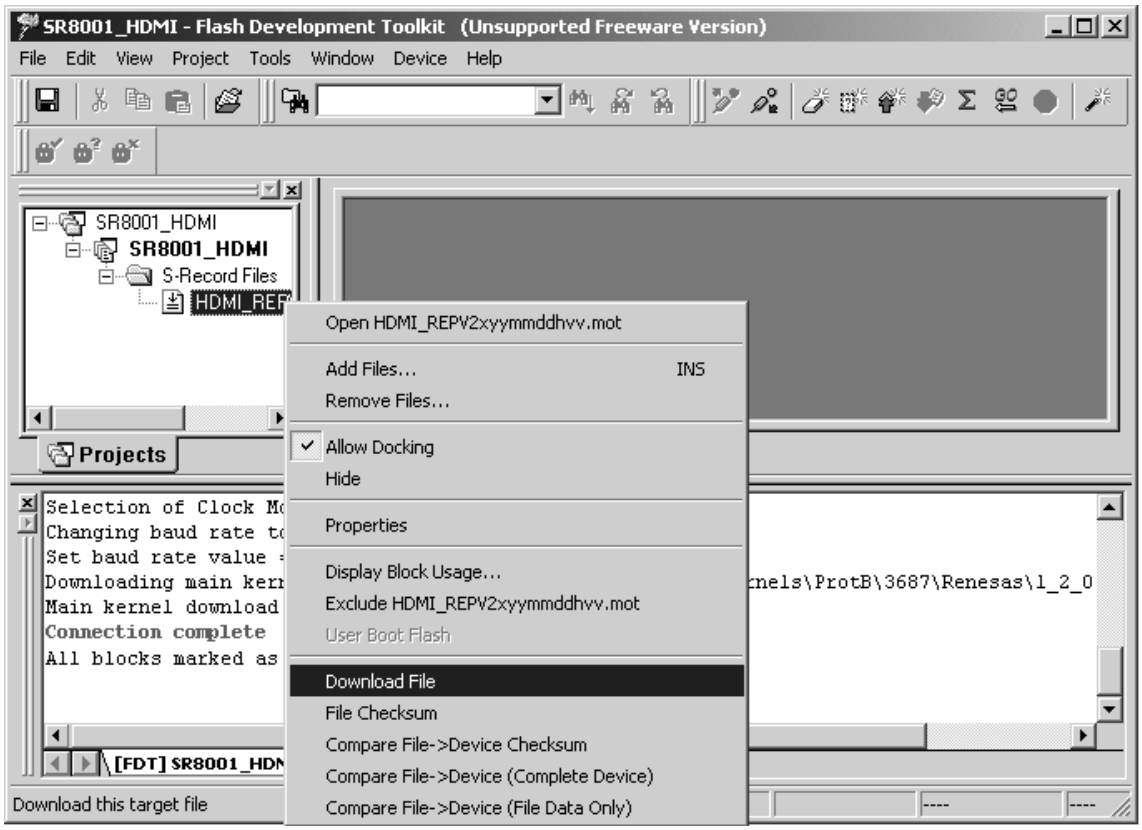

17. Software is written into the HDMI CPU.
The writing of software takes about 45 seconds.

17. ソフトウェアがHDMIマイコンに書き込まれます。
書き込みにかかる時間は約45秒です。

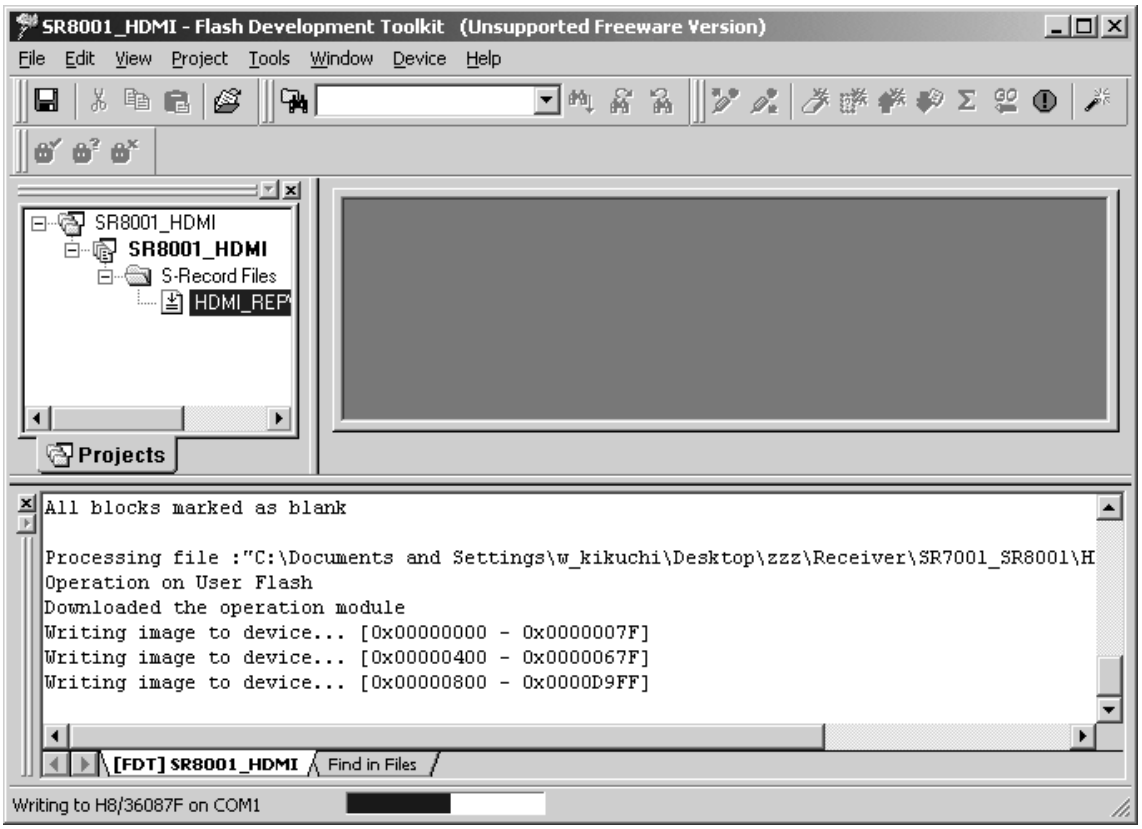

18. Click the **Device** in the menu bar and select the **Disconnect**.

18. **Device**をクリックし、メニューから**Disconnect**をクリックします。

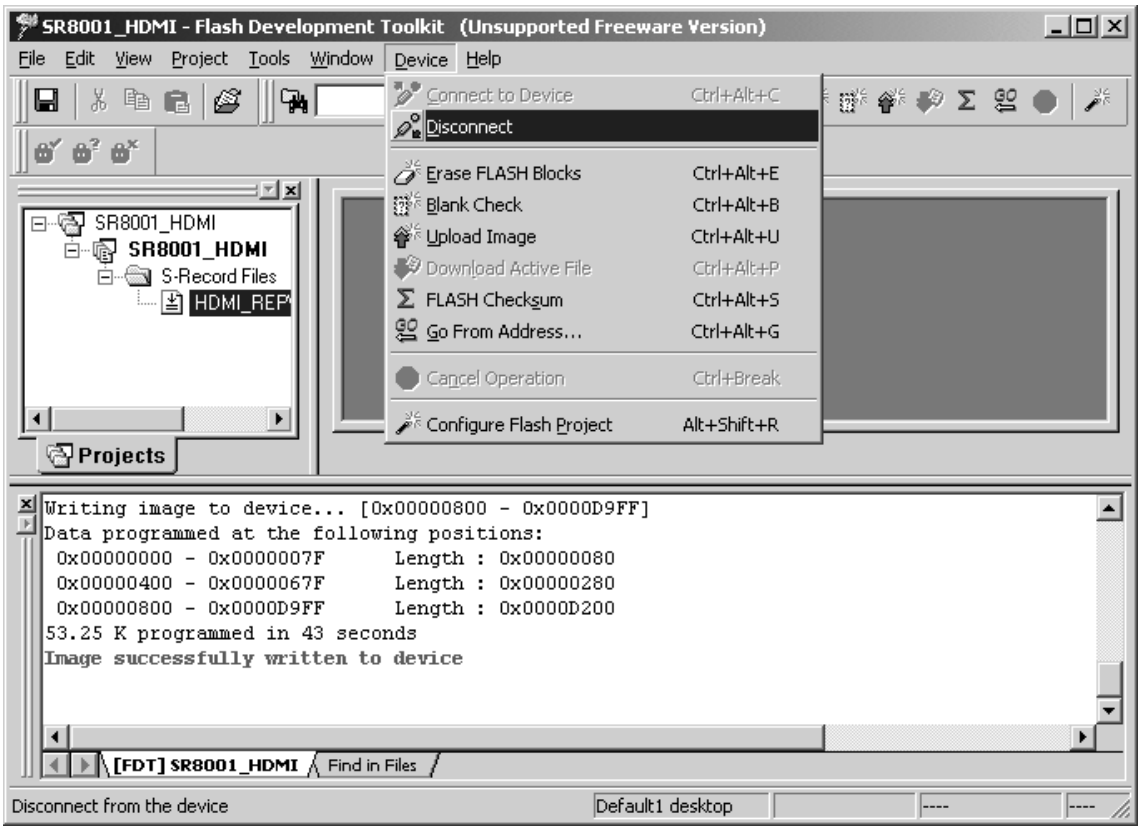

19. Click the **File** and select the **Exit** in menu.

19. **File**をクリックし、メニューから**Exit**をクリックします。

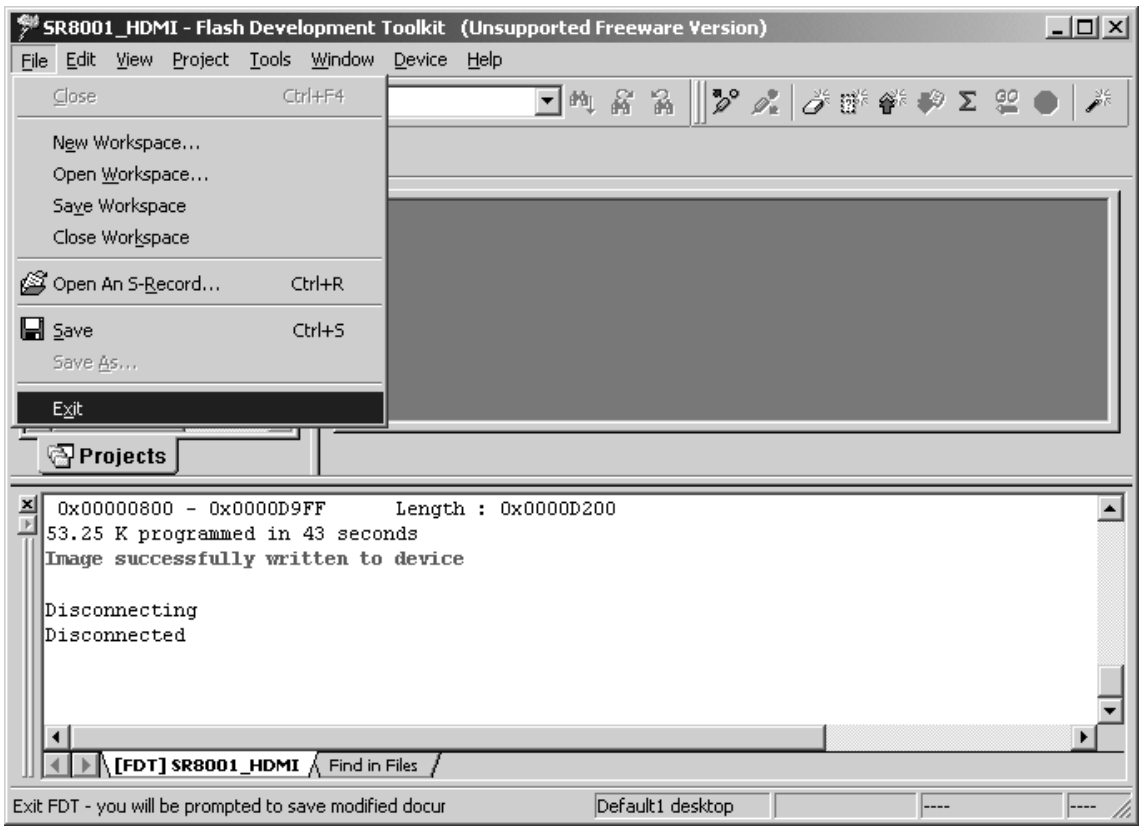

20. Press the **POWER ON/STANDBY** button for turn off the unit.
21. Disconnect the mains cord and RS-232C cable from the unit.

20. **POWER ON/STANDBY**ボタンを押し、本機の電源を切ります。
21. 本機から電源コードとRS-232Cケーブルを外します。

Personal notes:

7. WIRING DIAGRAM

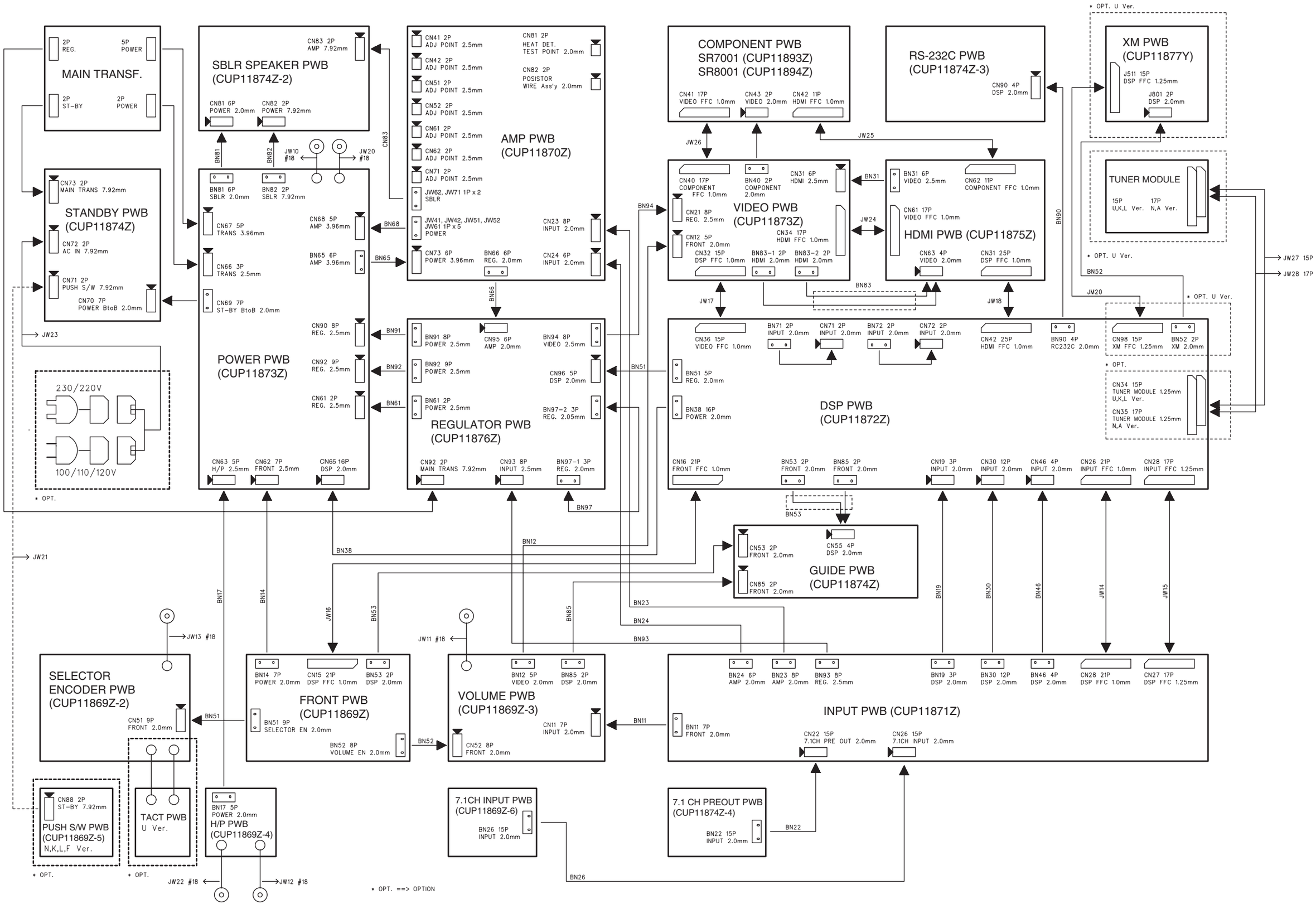

8. BLOCK DIAGRAM

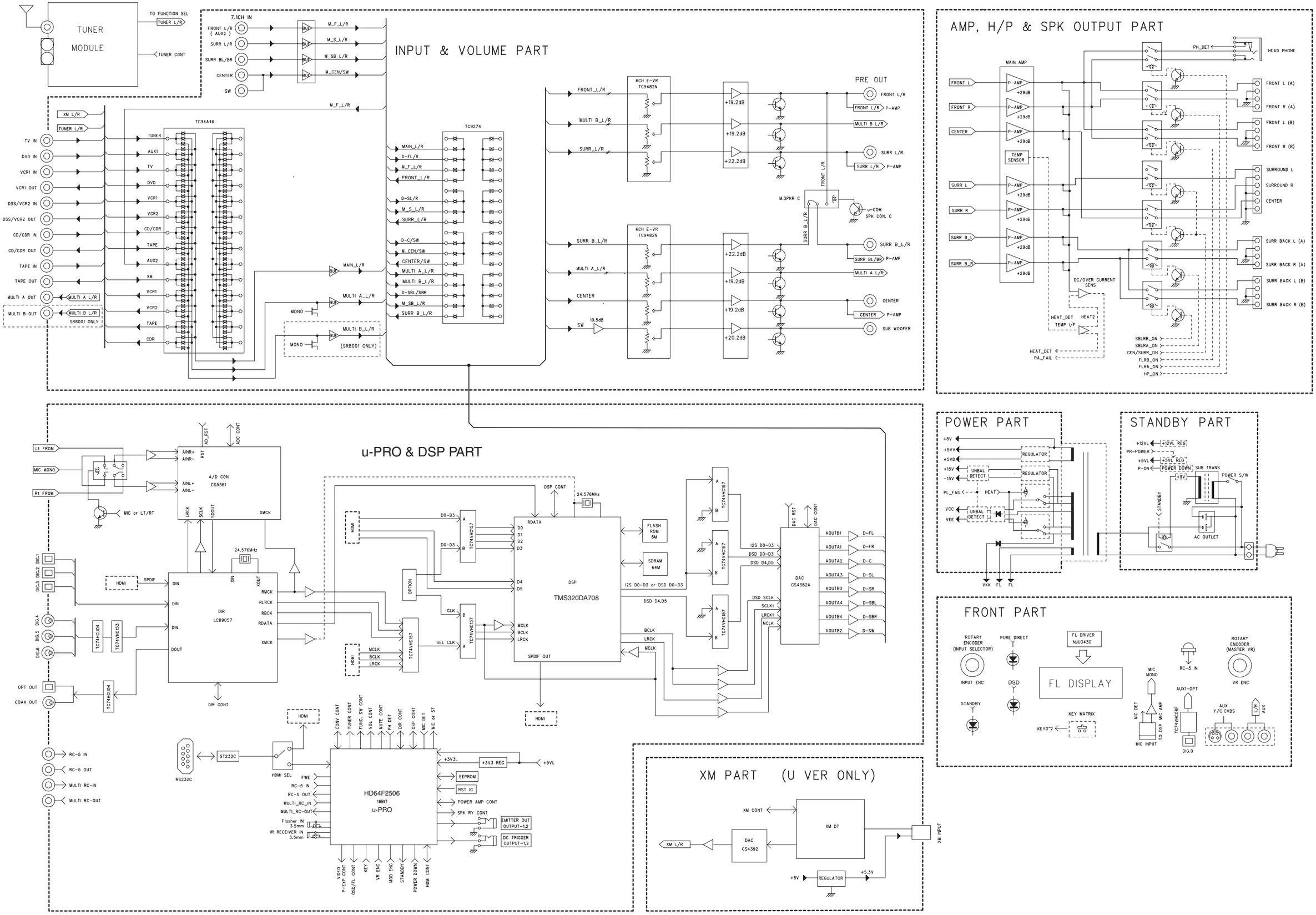

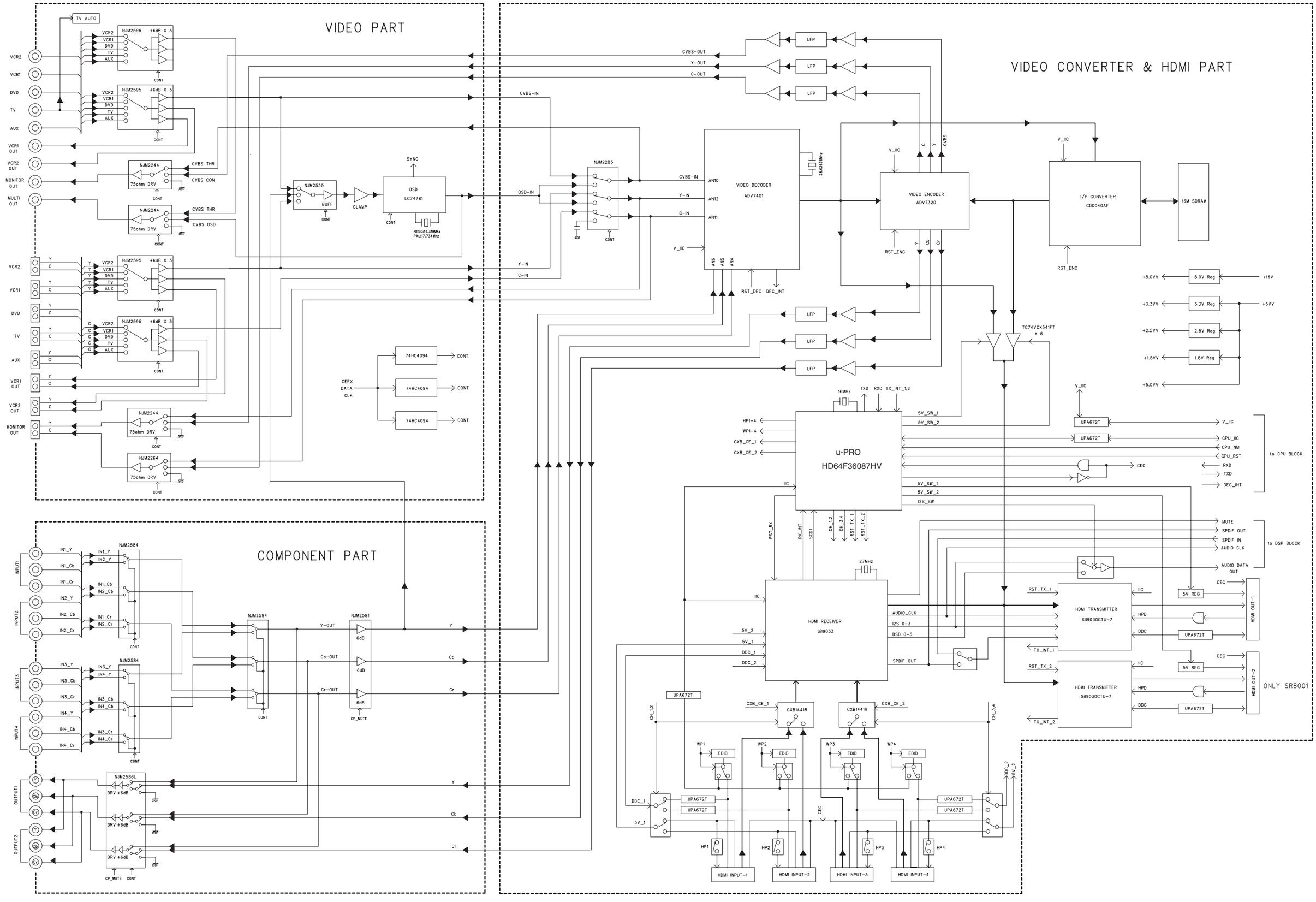
VIDEO PART
VIDEO CONVERTER & HDMI PART
COMPONENT PART
TV AUTO
VCR2
VCR1
DVD
TV
AUX
VCR1 OUT
VCR2 OUT
MONITOR OUT
MULTI OUT
NJM2595 +6dB X 3
NJM2244
75ohm DRV
CVBS THR
CVBS CON
CVBS OSD
NJM2535
BUFF
CLAMP
SYNC
OSD LC74781
NTSC:14.318Mhz
PAL:17.734Mhz
CONT
CEEX
DATA
CLK
74HC4094
NJM2264
CVBS-OUT
Y-OUT
C-OUT
CVBS-IN
OSD-IN
Y-IN
C-IN
NJM2285
VIDEO DECODER
ADV7401
AN10
AN12
AN11
AN6
AN5
AN4
V_IIC
RST_DEC
DEC_INT
28.63636MHz
LFP
VIDEO ENCODER
ADV7320
RST_ENC
I/P CONVERTER
CD0040AF
16M SDRAM
+8.0VV
8.0V Reg
+15V
+3.3VV
3.3V Reg
+5VV
+2.5VV
2.5V Reg
+1.8VV
1.8V Reg
+5.0VV
TC74VCX541FT
X 6
16MHz
TXD
RXD
TX_INT_1,2
u-PRO
HD64F36087HV
HP1-4
WP1-4
CXB_CE_1
CXB_CE_2
5V_SW_1
5V_SW_2
I2S_SW
UPA672T
CPU_IIC
CPU_NMI
CPU_RST
CEC
DEC_INT
to CPU BLOCK
MUTE
SPDIF OUT
SPDIF IN
AUDIO CLK
AUDIO DATA OUT
to DSP BLOCK
27MHz
HDMI RECEIVER
SII9033
AUDIO_CLK
I2S 0-3
DSD 0-5
SPDIF OUT
HDMI TRANSMITTER
SII9030CTU-7
RST_TX_1
RST_TX_2
TX_INT_1
TX_INT_2
5V REG
HDMI OUT-1
HDMI OUT-2
ONLY SR8001
CXB1441R
EDID
WP1
WP2
WP3
WP4
HP1
HP2
HP3
HP4
HDMI INPUT-1
HDMI INPUT-2
HDMI INPUT-3
HDMI INPUT-4
NJM2584
NJM2581
NJM2586L
DRV +6dB
CP_MUTE
INPUT1
INPUT2
INPUT3
INPUT4
OUTPUT1
OUTPUT2

9. SCHEMATIC DIAGRAM

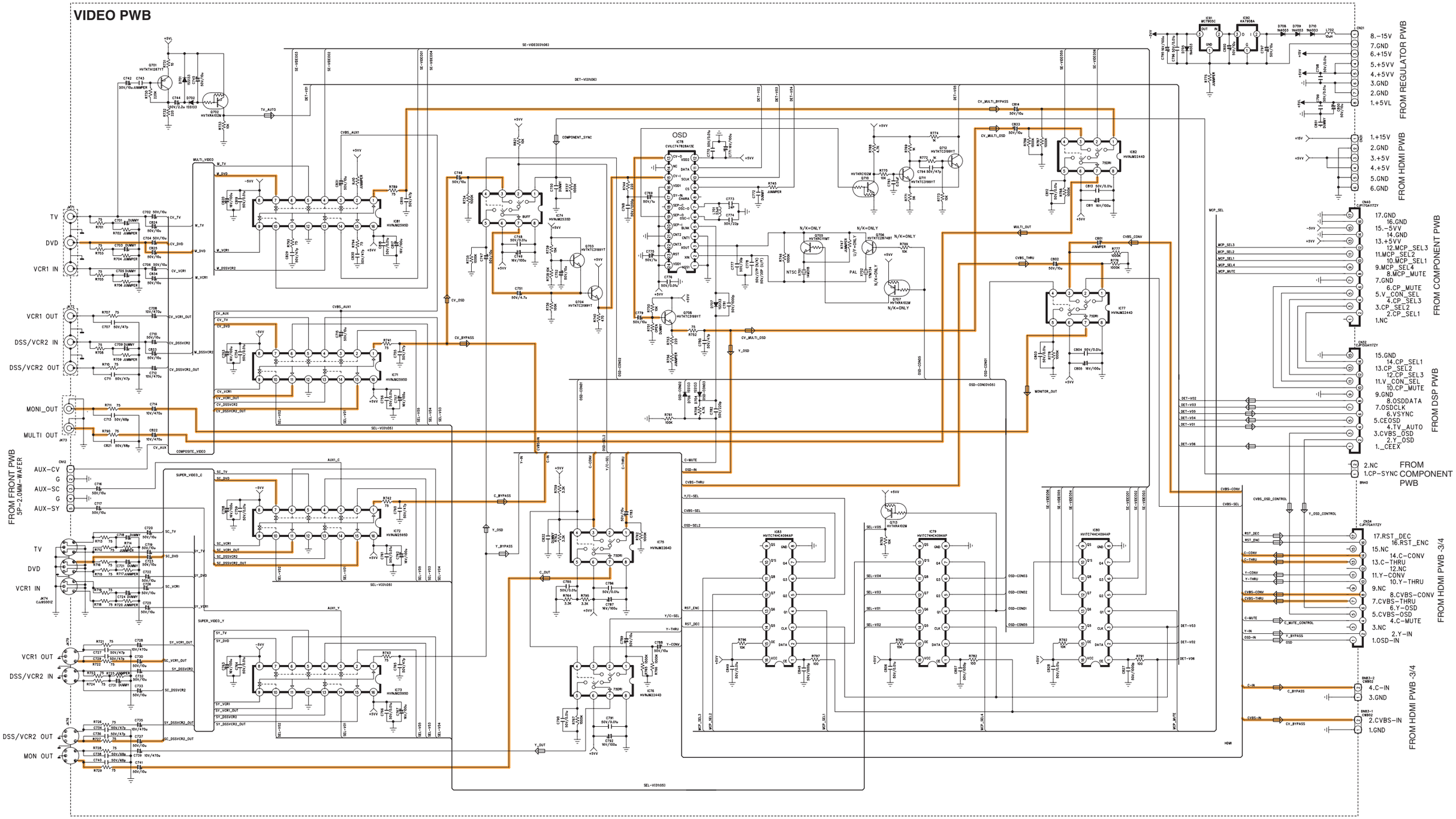

VERSION OPTION TABLE					
		N (EUR)	U (USA)	K (CHINA)	F (JAPAN)
C777	LOAD CAP	30p	30p	30p	30p
C778	LOAD CAP	27p	30p	27p	30p
Q705	KRC111M	○	×	○	×
Q706	KRC111M	○	×	○	×
Q707	KRA102M	○	×	○	×
R747	JUMPER	×	○	×	○
X702	17.7344MHz	○	×	○	×

COMPONENT PWB

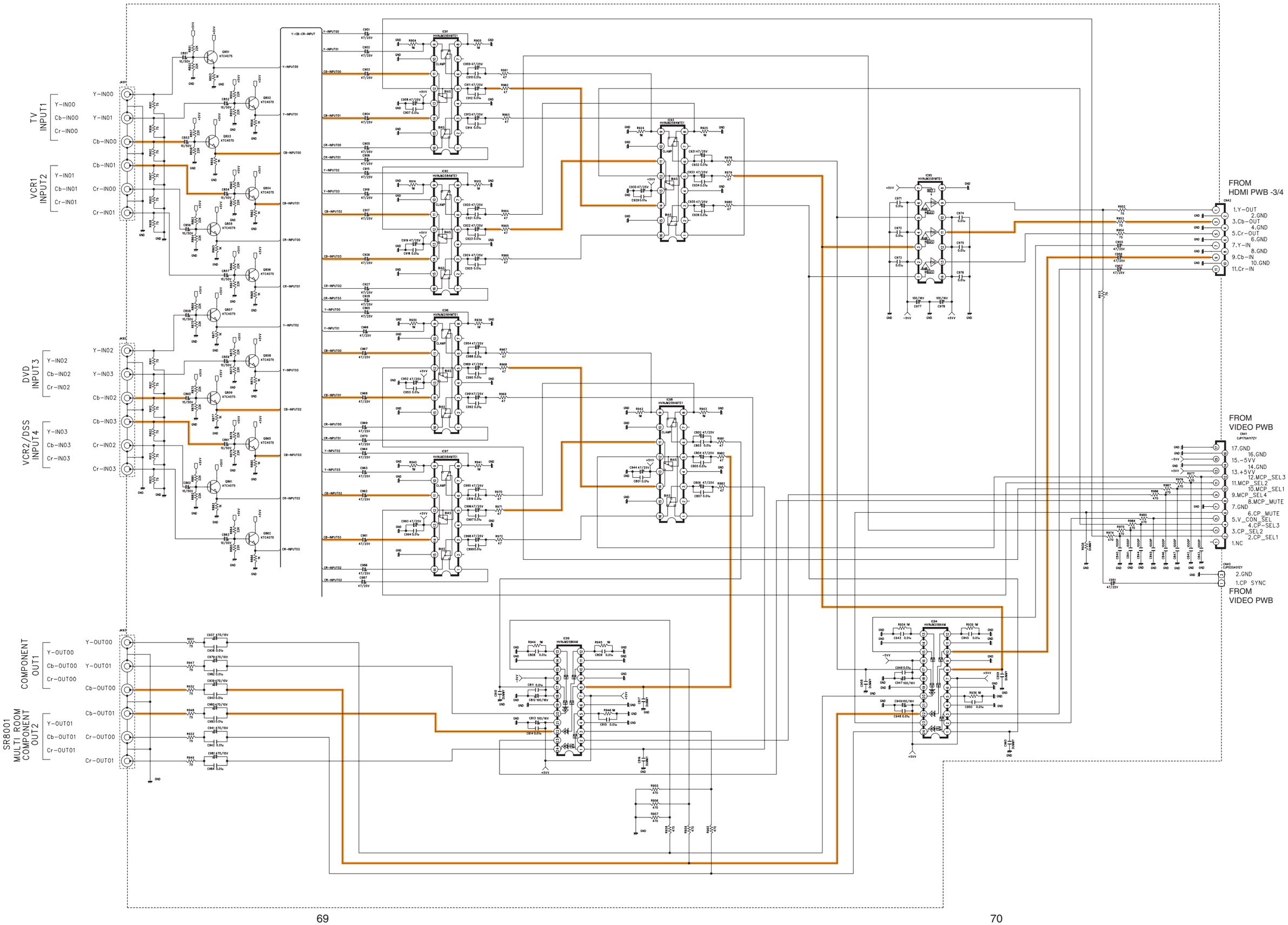

HDMI PWB -1/4

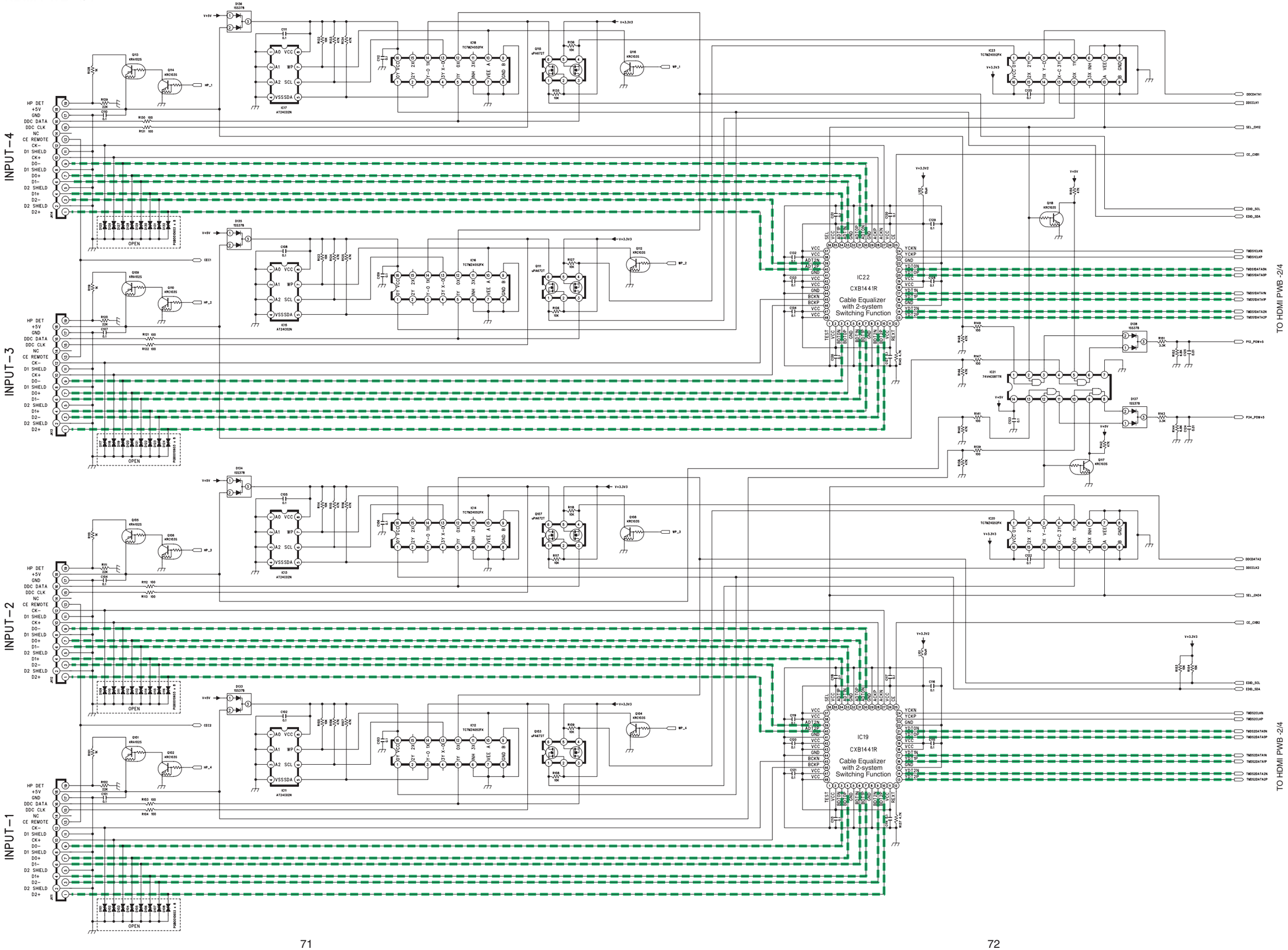
INPUT-4
INPUT-3
INPUT-2
INPUT-1
HP DET
+5V
GND
DDC DATA
DDC CLK
NC
CE REMOTE
CK-
D1 SHIELD
CK+
D0-
D1 SHIELD
D0+
D1-
D2 SHIELD
D1+
D2-
D2 SHIELD
D2+
OPEN
IC17
AT24C02N
IC16
AT24C02N
IC15
AT24C02N
IC13
AT24C02N
IC11
AT24C02N
IC18
TC7WZ4052FK
IC16
TC7WZ4052FK
IC14
TC7WZ4052FK
IC12
TC7WZ4052FK
IC23
TC7WZ4052FK
IC20
TC7WZ4052FK
IC22
CXB1441R
Cable Equalizer
with 2-system
Switching Function
IC19
CXB1441R
Cable Equalizer
with 2-system
Switching Function
IC21
74VHC08TTR
DDCDATA1
DDCCLK1
SEL_CH12
CE_CXB1
EDID_SCL
EDID_SDA
TMDS1CLKN
TMDS1CLKP
TMDS1DATA0N
TMDS1DATA0P
TMDS1DATA1N
TMDS1DATA1P
TMDS1DATA2N
TMDS1DATA2P
P12_POW+5
P34_POW+5
DDCDATA2
DDCCLK2
SEL_CH34
CE_CXB2
EDID_SCL
EDID_SDA
TMDS2CLKN
TMDS2CLKP
TMDS2DATA0N
TMDS2DATA0P
TMDS2DATA1N
TMDS2DATA1P
TMDS2DATA2N
TMDS2DATA2P
TO HDMI PWB -2/4
TO HDMI PWB -2/4

HDMI PWB -2/4

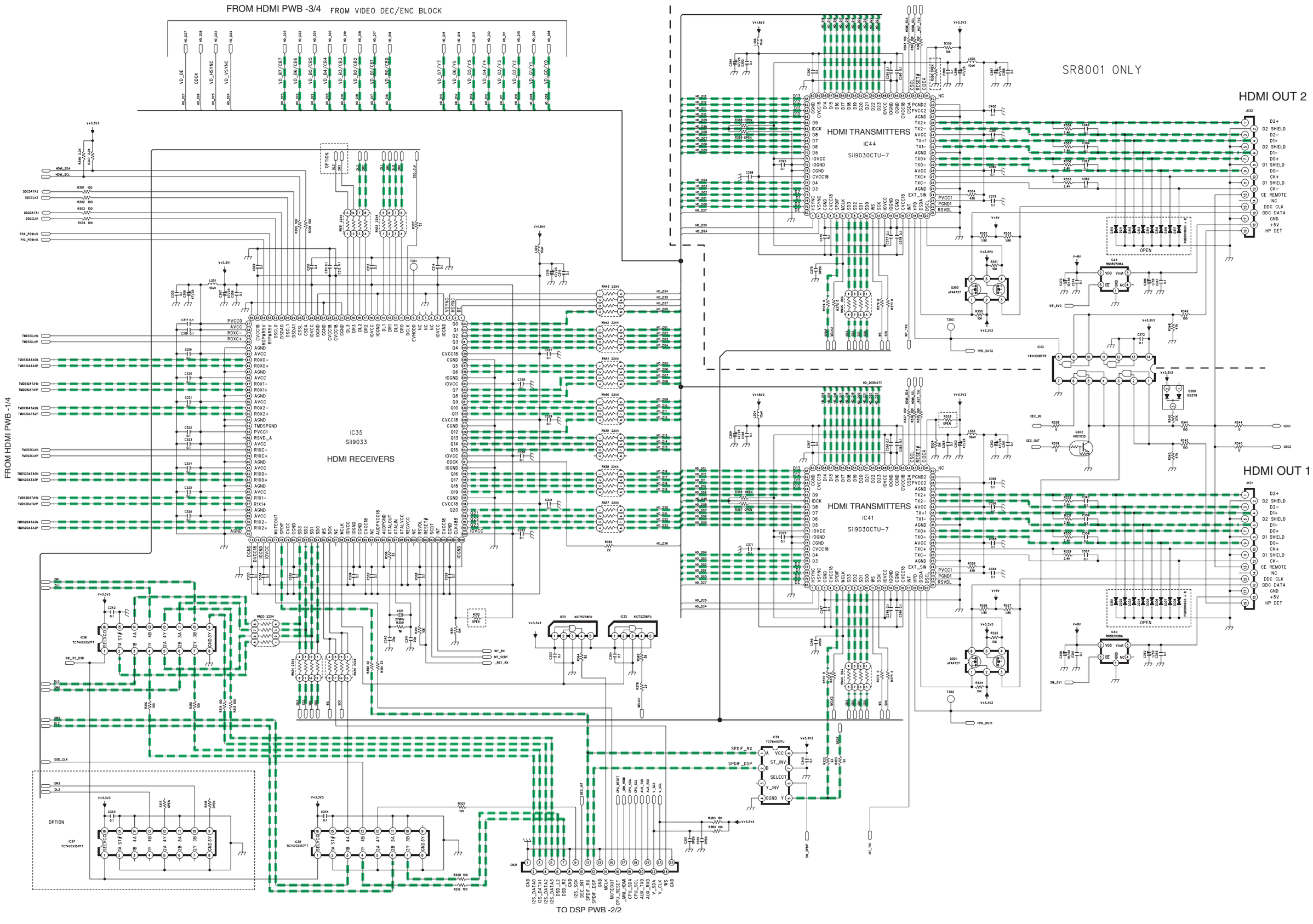
FROM HDMI PWB -3/4
FROM VIDEO DEC/ENC BLOCK
FROM HDMI PWB -1/4
IC35
Si9033
HDMI RECEIVERS
HDMI TRANSMITTERS
IC44
Si9030CTU-7
SR8001 ONLY
HDMI OUT 2
HDMI TRANSMITTERS
IC41
Si9030CTU-7
HDMI OUT 1
OPTION
TO DSP PWB -2/2

HDMI PWB -3/4

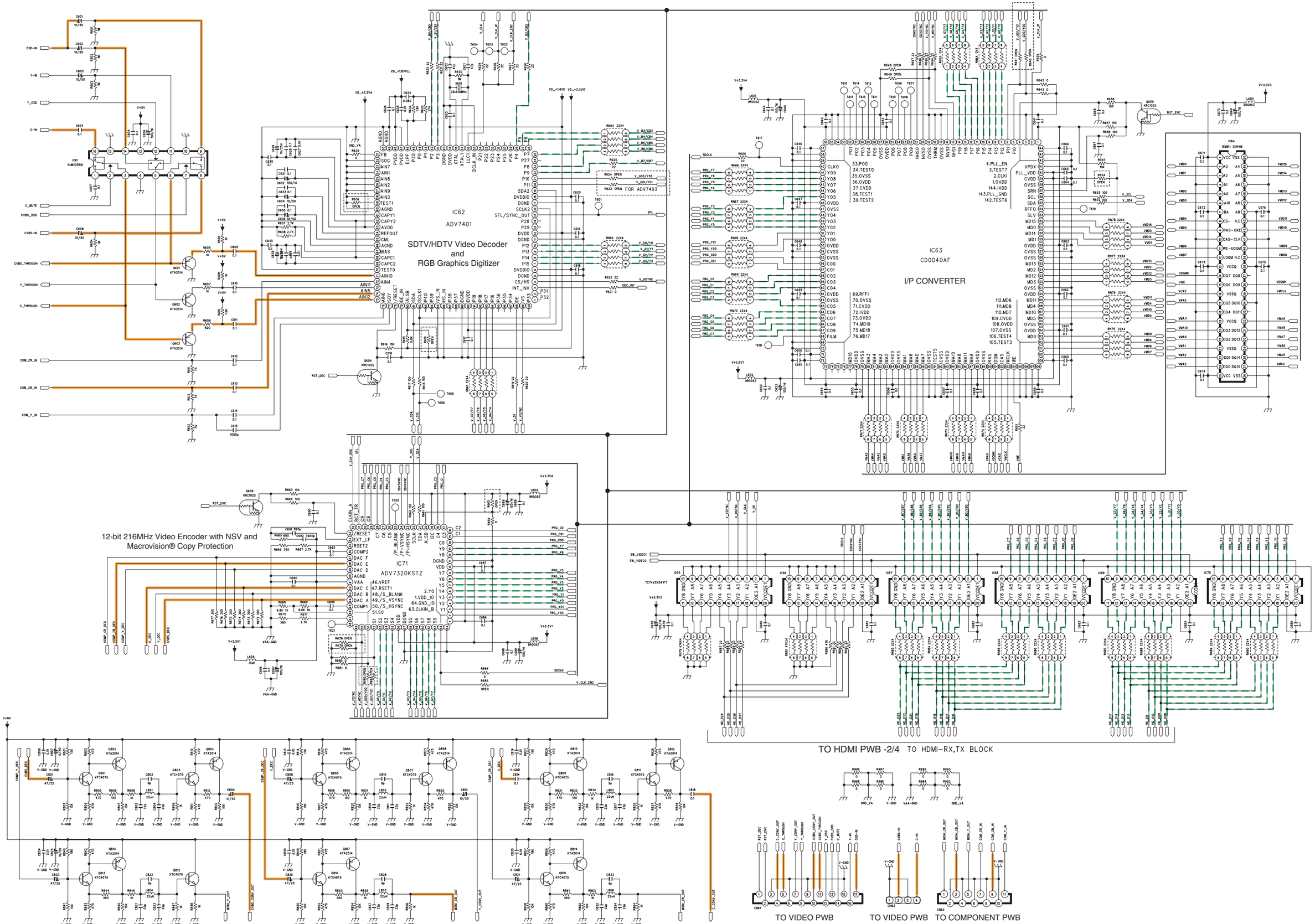
IC62
ADV7401
SDTV/HDTV Video Decoder
and
RGB Graphics Digitizer
IC63
CD0040AF
I/P CONVERTER
IC64
16MB1 SDRAM
IC71
ADV7320KSTZ
12-bit 216MHz Video Encoder with NSV and
Macrovision® Copy Protection
TO HDMI PWB -2/4
TO HDMI-RX,TX BLOCK
TO VIDEO PWB
TO VIDEO PWB
TO COMPONENT PWB

HDMI PWB -4/4

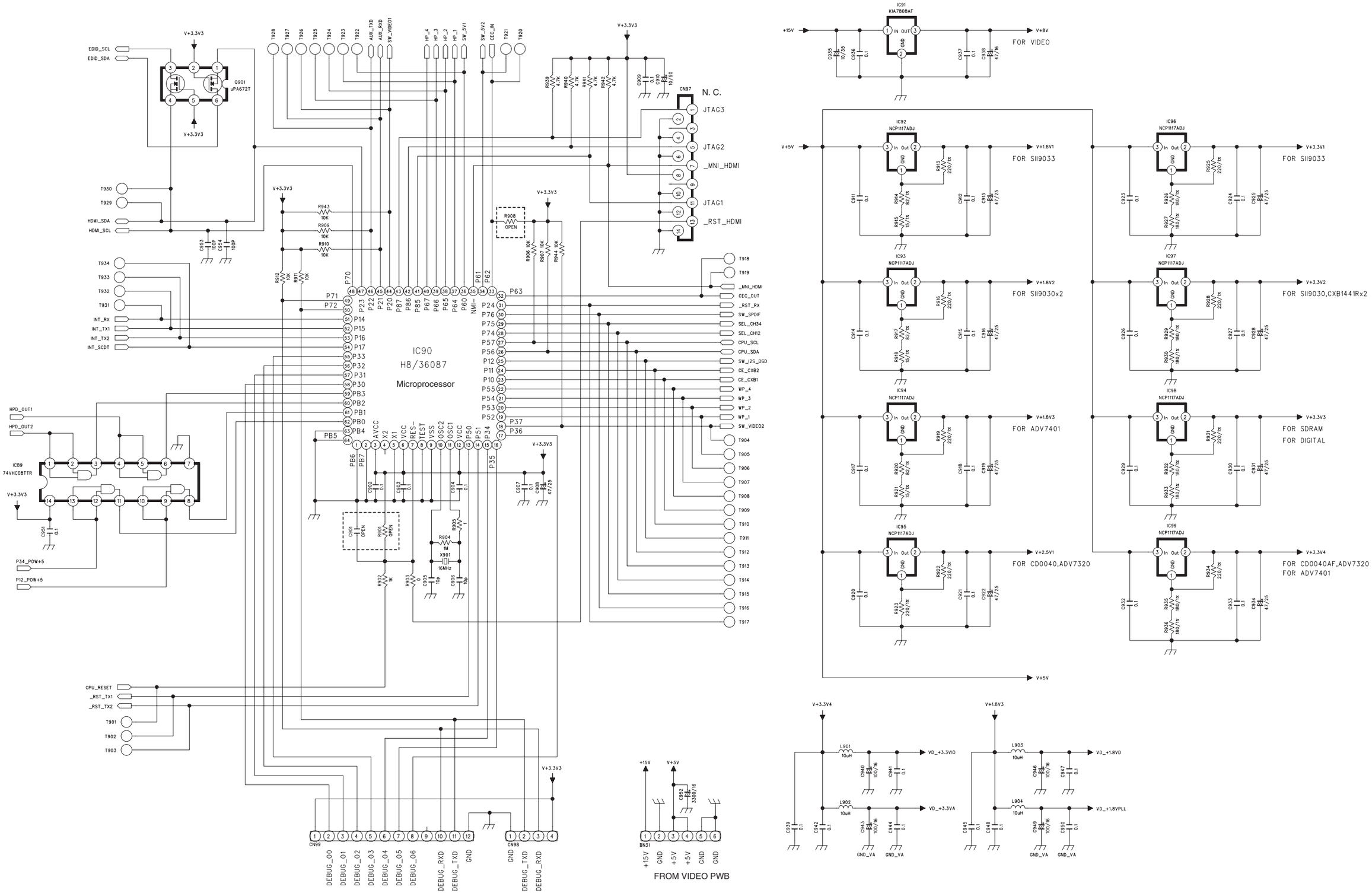
IC90
H8/36087
Microprocessor
IC89
74VHC08TTR
Q901
uPA672T
CN97
N. C.
JTAG3
JTAG2
_MNI_HDMI
JTAG1
_RST_HDMI
IC91
KIA7808AF
FOR VIDEO
IC92
NCP1117ADJ
FOR SII9033
IC93
NCP1117ADJ
FOR SII9030x2
IC94
NCP1117ADJ
FOR ADV7401
IC95
NCP1117ADJ
FOR CD0040,ADV7320
IC96
NCP1117ADJ
FOR SII9033
IC97
NCP1117ADJ
FOR SII9030,CXB1441Rx2
IC98
NCP1117ADJ
FOR SDRAM
FOR DIGITAL
IC99
NCP1117ADJ
FOR CD0040AF,ADV7320
FOR ADV7401
CN99
CN98
BN31
FROM VIDEO PWB

INPUT PWB

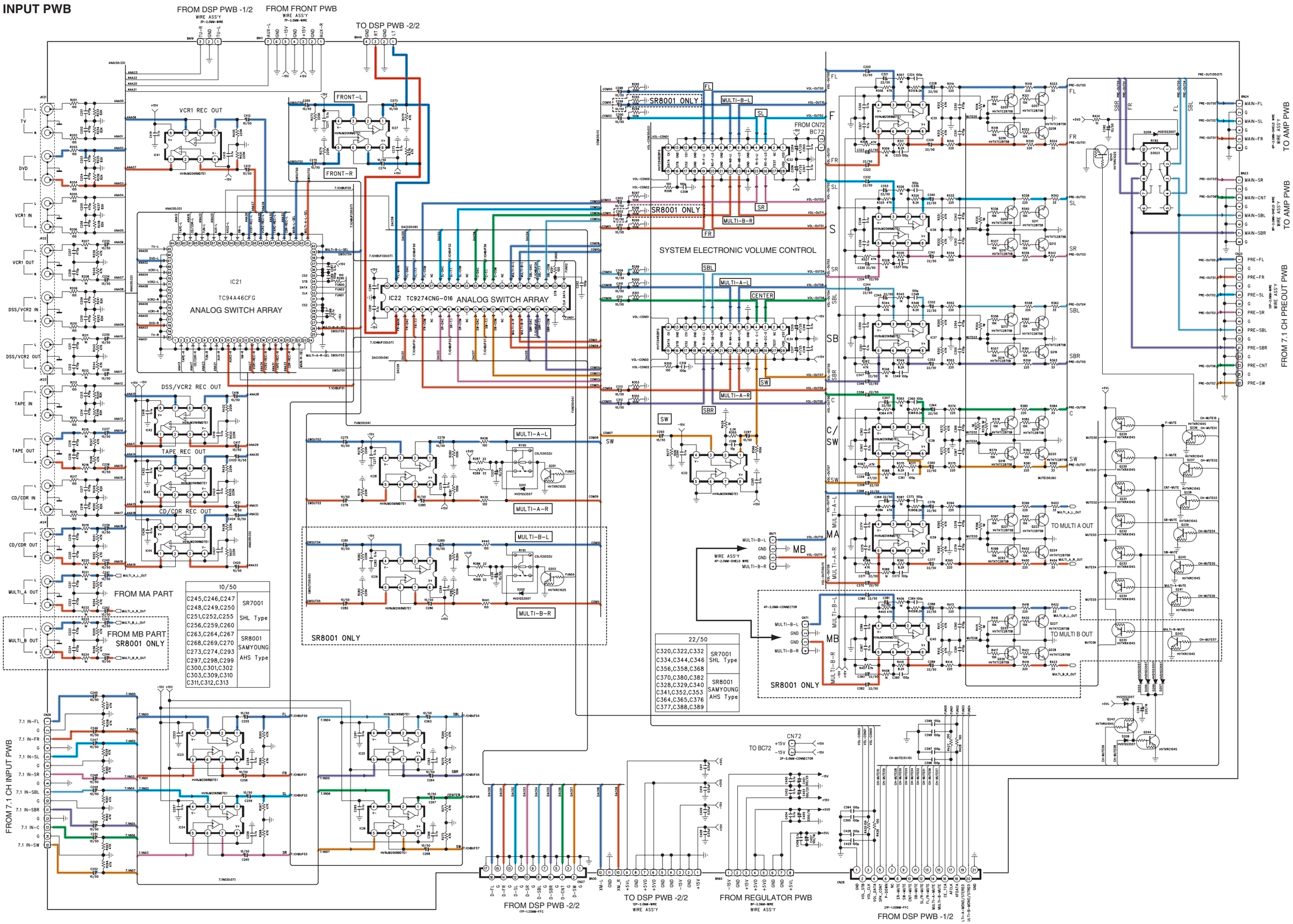
FROM DSP PWB -1/2
WIRE ASS'Y
FROM FRONT PWB
WIRE ASS'Y
TO DSP PWB -2/2
TV
DVD
VCR1 IN
VCR1 OUT
DSS/VCR2 IN
DSS/VCR2 OUT
TAPE IN
TAPE OUT
CD/CDR IN
CD/CDR OUT
MULTI_A OUT
MULTI_B OUT
VCR1 REC OUT
DSS/VCR2 REC OUT
TAPE REC OUT
CD/CDR REC OUT
FRONT-L
FRONT-R
IC21
TC94A46CFG
ANALOG SWITCH ARRAY
IC22 TC9274CNG-016 ANALOG SWITCH ARRAY
SR8001 ONLY
MULTI-B-L
MULTI-B-R
MULTI-A-L
MULTI-A-R
SYSTEM ELECTRONIC VOLUME CONTROL
FROM MA PART
FROM MB PART
SR8001 ONLY
10/50
C245,C246,C247
C248,C249,C250
C251,C252,C255
C256,C259,C260
C263,C264,C267
C268,C269,C270
C273,C274,C293
C297,C298,C299
C300,C301,C302
C303,C309,C310
C311,C312,C313
SR7001
SHL Type
SR8001
SAMYOUNG
AHS Type
22/50
C320,C322,C332
C334,C344,C346
C356,C358,C368
C370,C380,C382
C328,C329,C340
C341,C352,C353
C364,C365,C376
C377,C388,C389
SR7001
SHL Type
SR8001
SAMYOUNG
AHS Type
TO MULTI A OUT
TO MULTI B OUT
TO AMP PWB
FROM 7.1 CH PREOUT PWB
FROM 7.1 CH INPUT PWB
FROM DSP PWB -2/2
TO DSP PWB -2/2
FROM REGULATOR PWB
FROM DSP PWB -1/2
CN72
TO BC72

DSP PWB 1/2

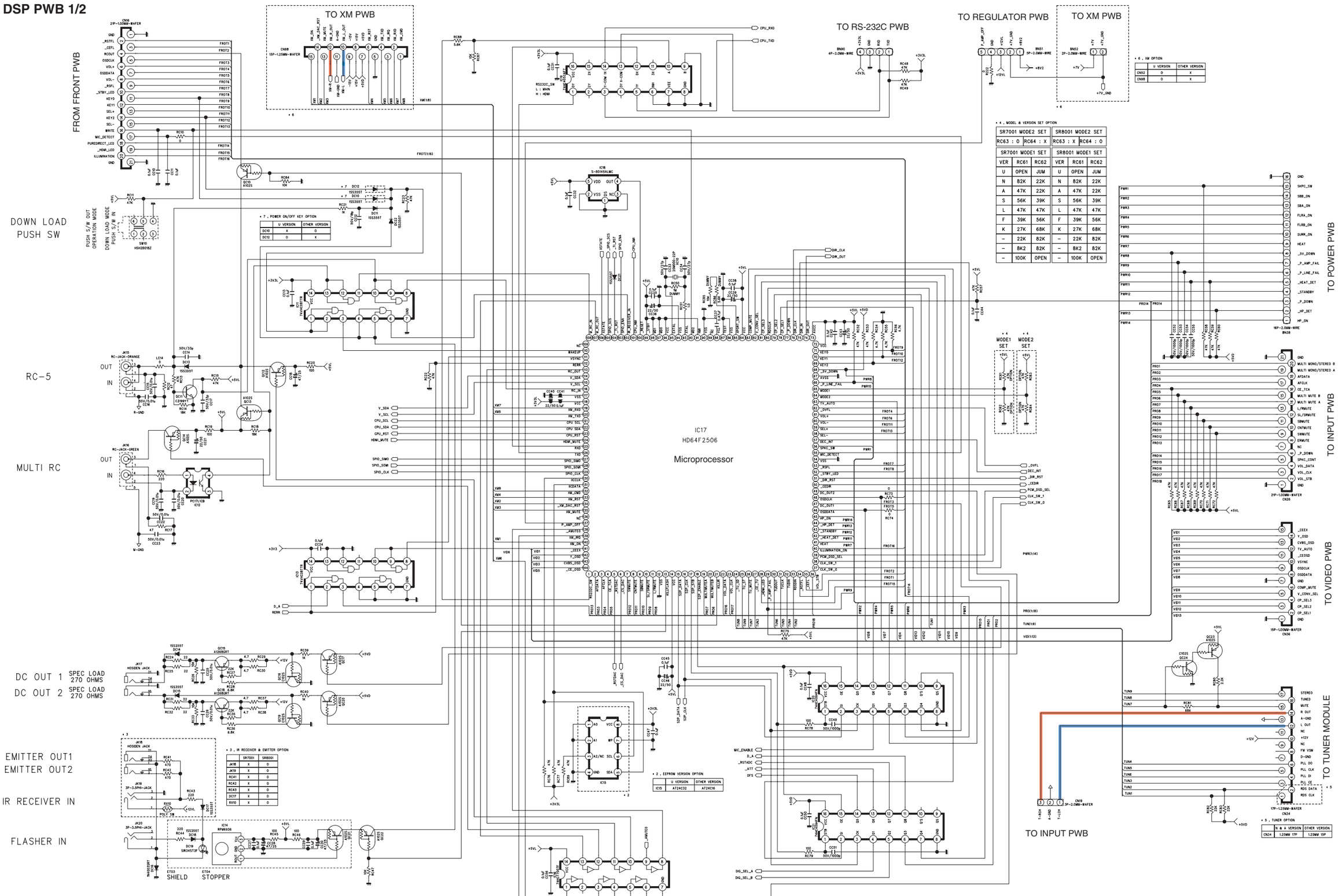

MODEL	SR7001	SR8001
VERSION	RO11	RO12
U	RO13	
N	RO14	
A	RO15	
L	RO16	
F	RO17	
K	RO18	

DSP PWB 2/2

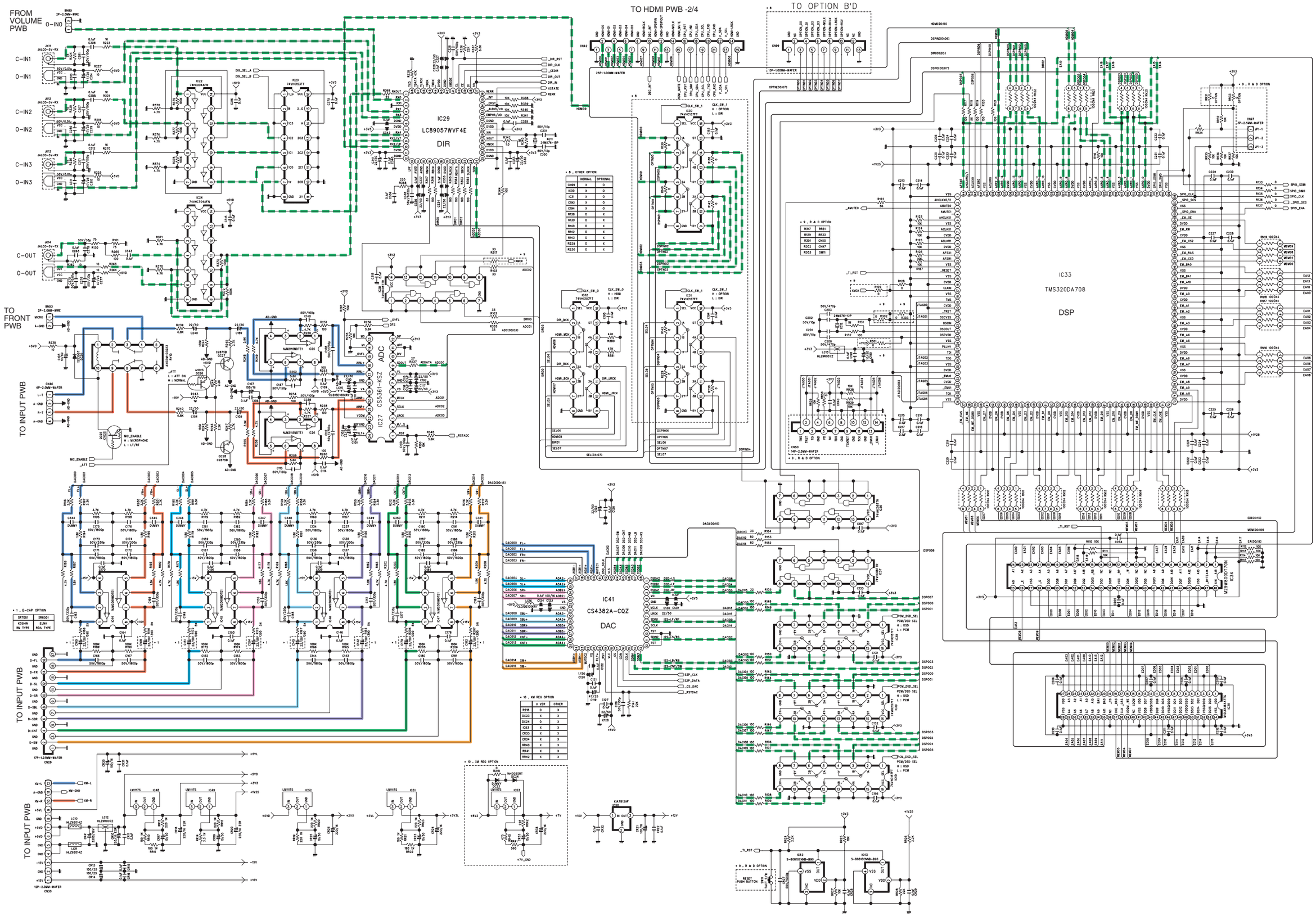
FROM VOLUME PWB
TO HDMI PWB -2/4
TO OPTION B'D
TO FRONT PWB
TO INPUT PWB
IC29
LC89057WVF4E
DIR
IC27
CS5361-KSZ
ADC
IC33
TMS320DA708
DSP
IC41
CS4382A-CQZ
DAC

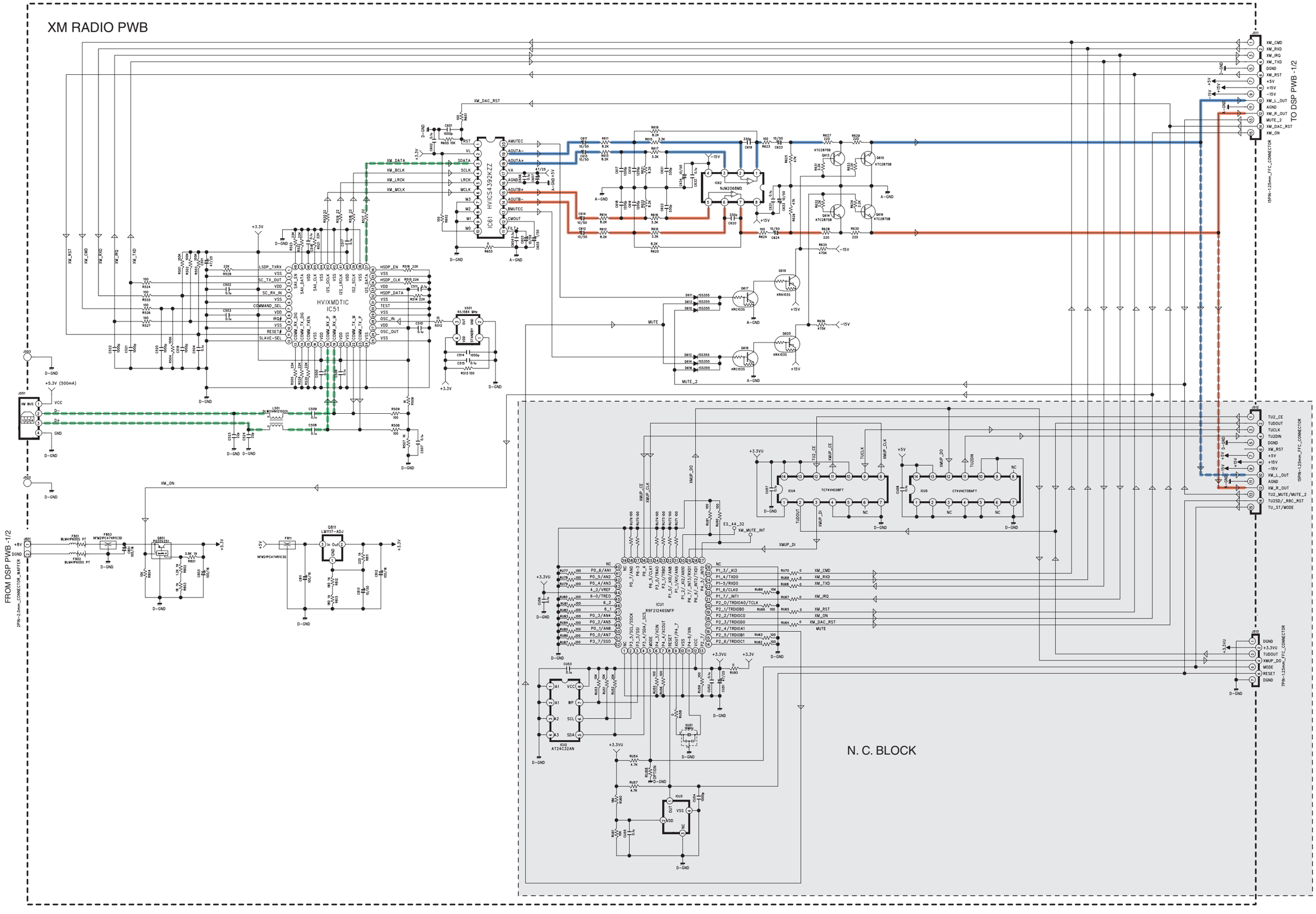
XM RADIO PWB
TO DSP PWB -1/2
FROM DSP PWB-1/2
N. C. BLOCK
HVICS4392KZZ
IC61
HVIXMDTIC
IC51
NJM2068MD
IC62
R5F21246SNFP
ICU1
AT24C32AN
ICU2
TC74VHC08FT
ICU4
C74VHCT08AFT
ICU5
LM1117-ADJ
Q811
XM_CMD
XM_RXD
XM_IRQ
XM_TXD
DGND
XM_RST
+5V
+15V
-15V
XM_L_OUT
AGND
XM_R_OUT
MUTE_2
XM_DAC_RST
XM_ON
TU2_CE
TUDOUT
TUCLK
TU2DIN
TU2_MUTE/MUTE_2
TU2SD/_R8C_RST
TU_ST/MODE
XMUP_DO
XMUP_CLK
XMUP_CE
XMUP_DI
XM_MUTE_INT
MUTE
XM_DATA
XM_BCLK
XM_LRCK
XM_MCLK
+3.3V
+3.3VU
+5.3V (500mA)
D-GND
A-GND

AMP PWB

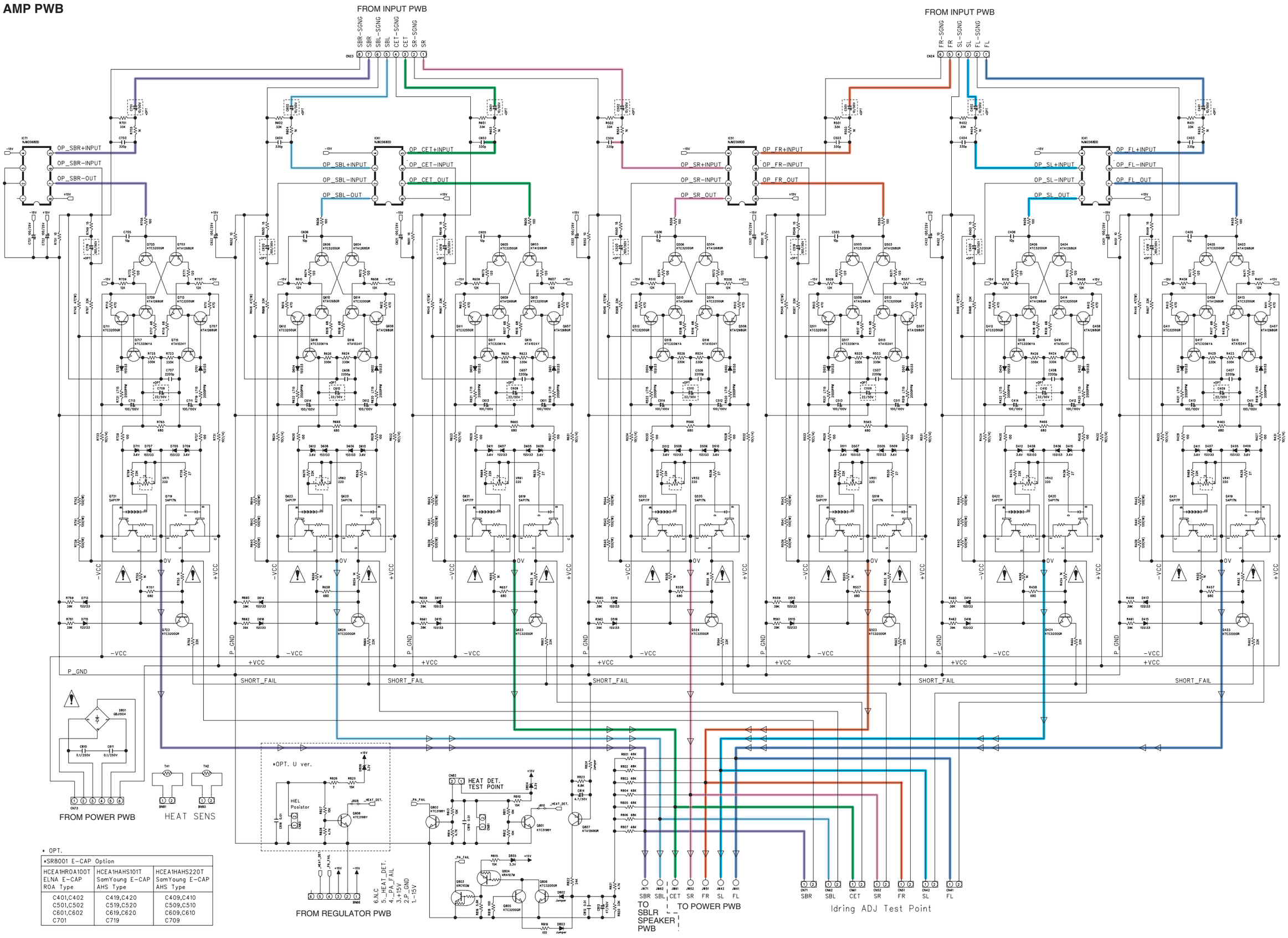

* OPT.

*SR8001 E-CAP Option		
HCEA1HR0A100T ELNA E-CAP ROA Type	HCEA1HAHS101T SamYoung E-CAP AHS Type	HCEA1HAHS220T SamYoung E-CAP AHS Type
C401,C402 C501,C502 C601,C602 C701	C419,C420 C519,C520 C619,C620 C719	C409,C410 C509,C510 C609,C610 C709

POWER PWB

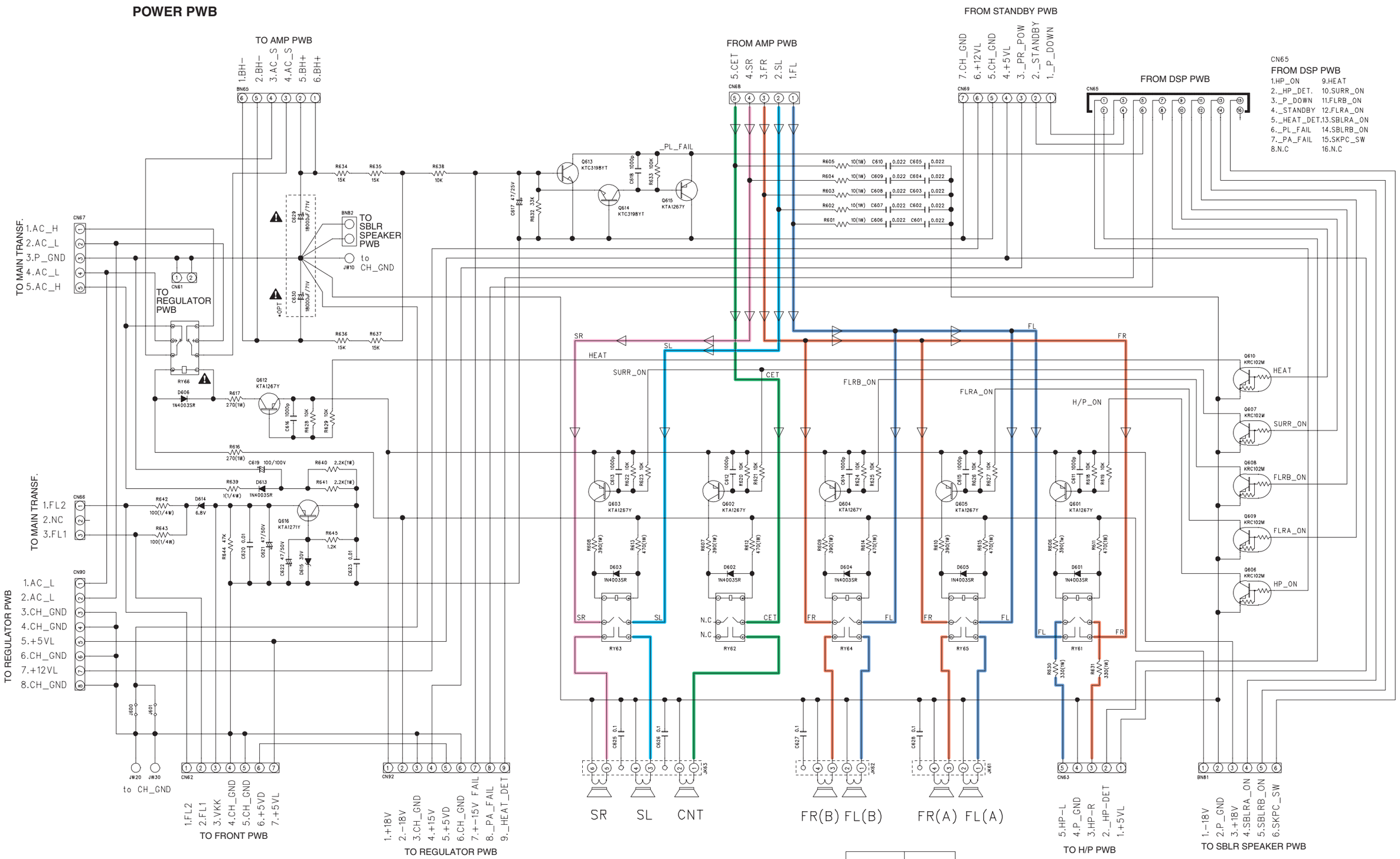

* OPTION	C629, C630
SR7001	LH6 TYPE 71V 18000uF
SR8001	LHO TYPE 71V 18000uF

SPK TERMINAL	COLOR
FR(A)	RED
FL(A)	WHITE
FL(B)	RED
FR(B)	WHITE
CENTER	GREEN
SR	GRAY
SL	BROWN

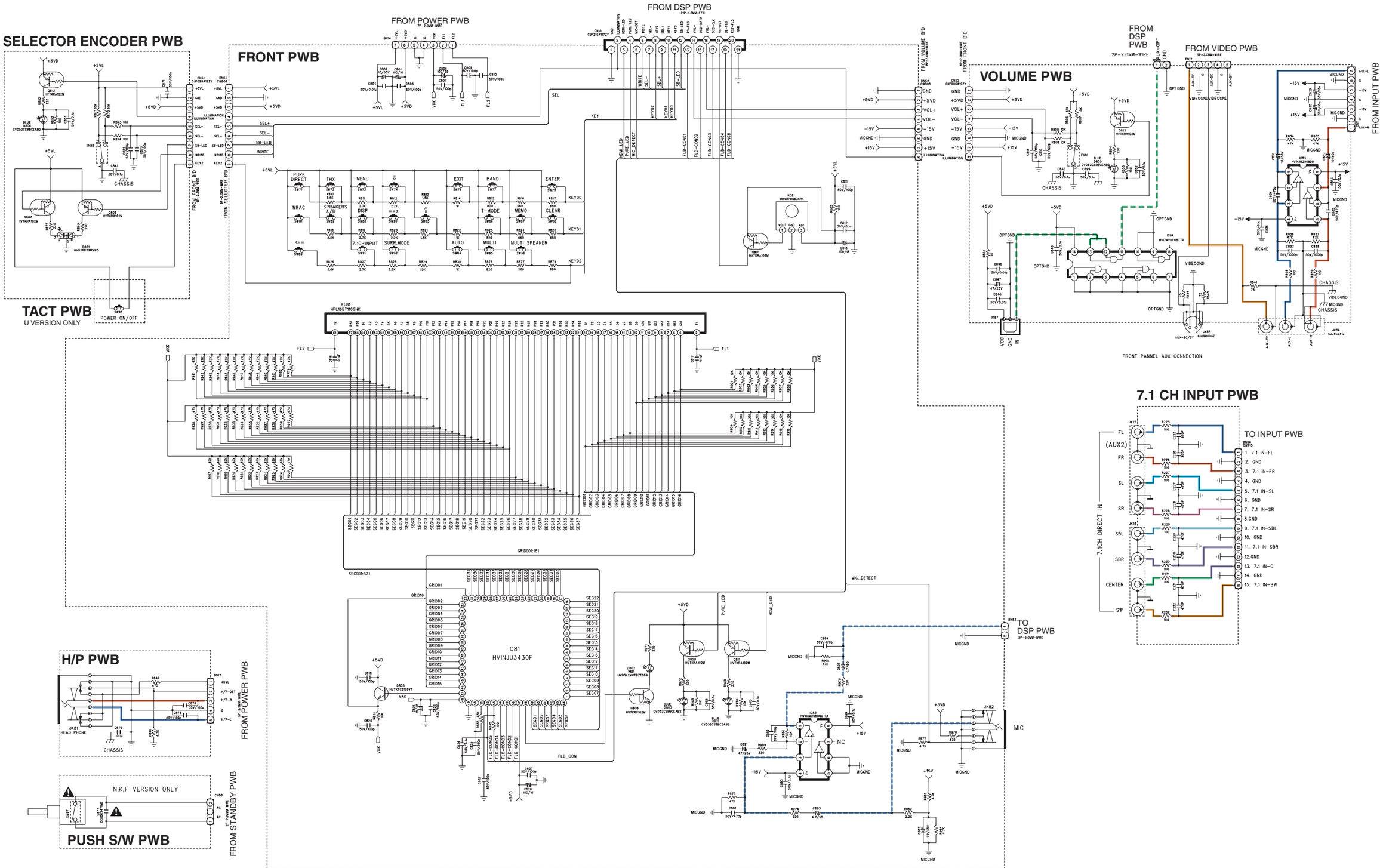
SELECTOR ENCODER PWB
FRONT PWB
FROM POWER PWB
FROM DSP PWB
VOLUME PWB
FROM VIDEO PWB
FROM INPUT PWB
TACT PWB
U VERSION ONLY
POWER ON/OFF
7.1 CH INPUT PWB
TO INPUT PWB
TO DSP PWB
IC81
HVINJU3430F
H/P PWB
FROM POWER PWB
N,K,F VERSION ONLY
PUSH S/W PWB
FROM STANDBY PWB
MIC

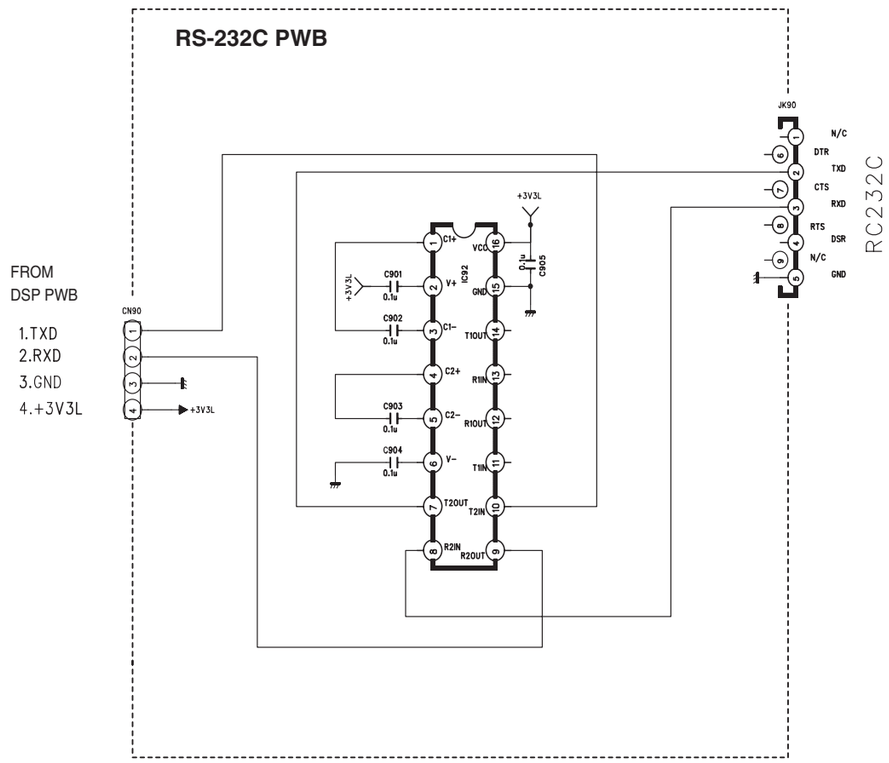
RS-232C PWB
FROM
DSP PWB
1.TXD
2.RXD
3.GND
4.+3V3L
CN90
JK90
RC232C
N/C
DTR
TXD
CTS
RXD
RTS
DSR
N/C
GND
+3V3L
IC92
C1+
C1-
C2+
C2-
V+
V-
VCC
GND
T1OUT
R1IN
R1OUT
T1IN
T2OUT
T2IN
R2IN
R2OUT
C901 0.1u
C902 0.1u
C903 0.1u
C904 0.1u
C905 0.1u

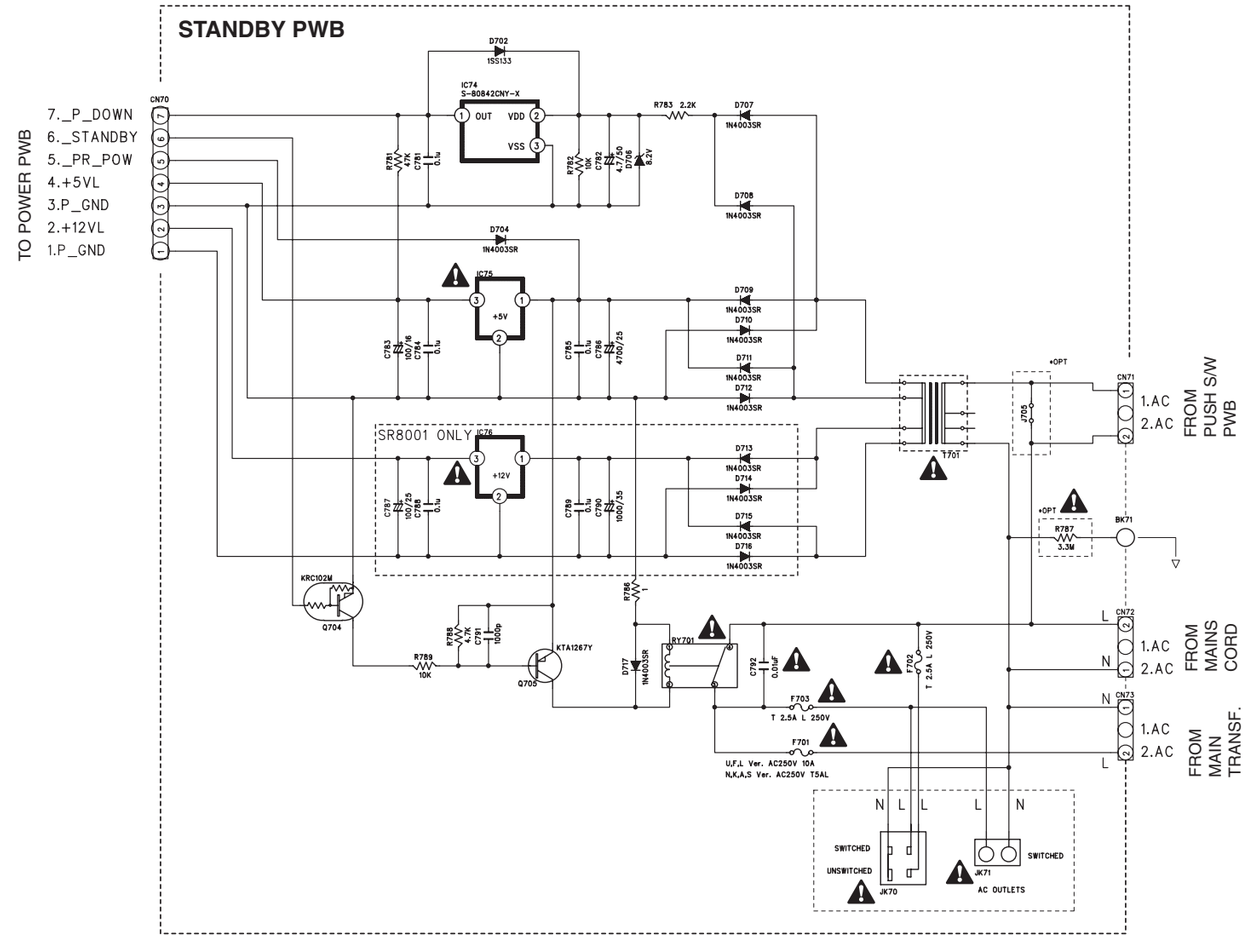
STANDBY PWB
TO POWER PWB
7._P_DOWN
6._STANDBY
5._PR_POW
4.+5VL
3.P_GND
2.+12VL
1.P_GND
CN70
IC74
S-80842CNY-X
OUT
VDD
VSS
IC75
+5V
IC76
+12V
SR8001 ONLY
T70T
RY701
KRC102M
Q704
KTA1267Y
Q705
F703
T 2.5A L 250V
F701
U,F,L Ver. AC250V 10A
N,K,A,S Ver. AC250V T5AL
SWITCHED
UNSWITCHED
JK70
JK71
AC OUTLETS
CN71
CN72
CN73
BK71
1.AC
2.AC
FROM PUSH S/W PWB
FROM MAINS CORD
FROM MAIN TRANSF.

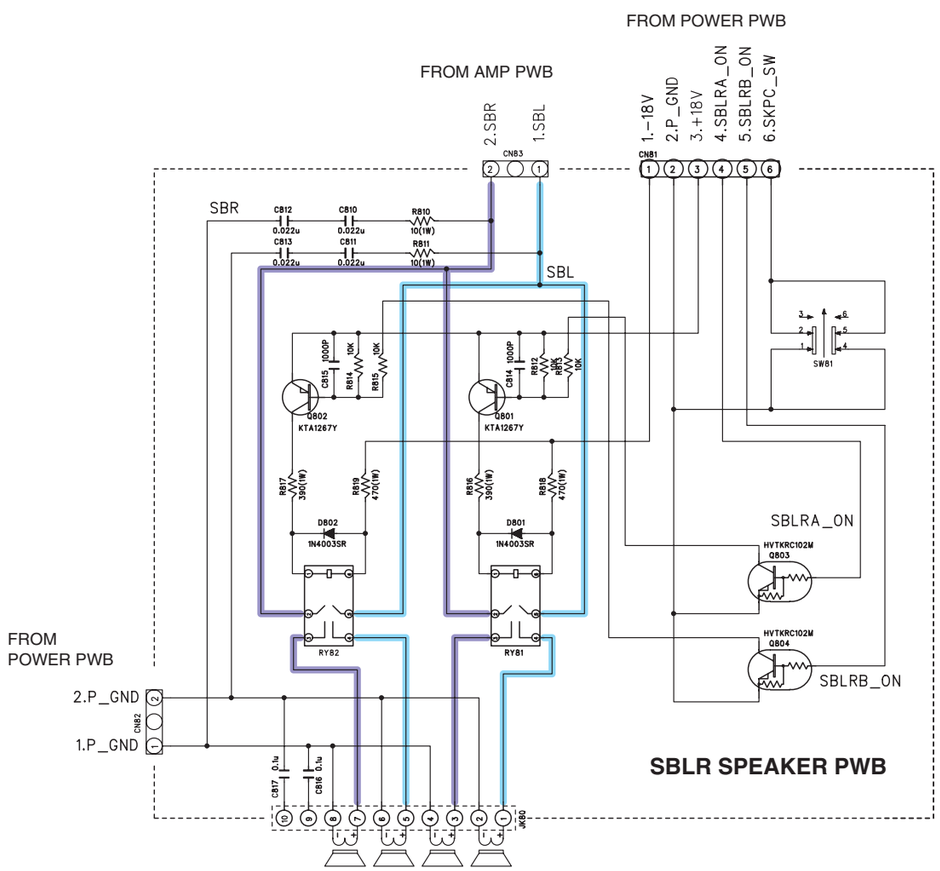
FROM POWER PWB
FROM AMP PWB
2.SBR
1.SBL
CN83
1.-18V
2.P_GND
3.+18V
4.SBLRA_ON
5.SBLRB_ON
6.SKPC_SW
CN81
SBR
SBL
SW81
Q802
KTA1267Y
Q801
KTA1267Y
D802
1N4003SR
D801
1N4003SR
RY82
RY81
SBLRA_ON
SBLRB_ON
HVTKRC102M
Q803
Q804
FROM
POWER PWB
2.P_GND
1.P_GND
CN82
SBLR SPEAKER PWB

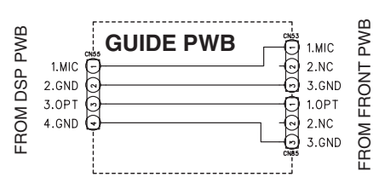
GUIDE PWB
FROM DSP PWB
1.MIC
2.GND
3.OPT
4.GND
CN85
CN83
1.MIC
2.NC
3.GND
1.OPT
2.NC
3.GND
FROM FRONT PWB

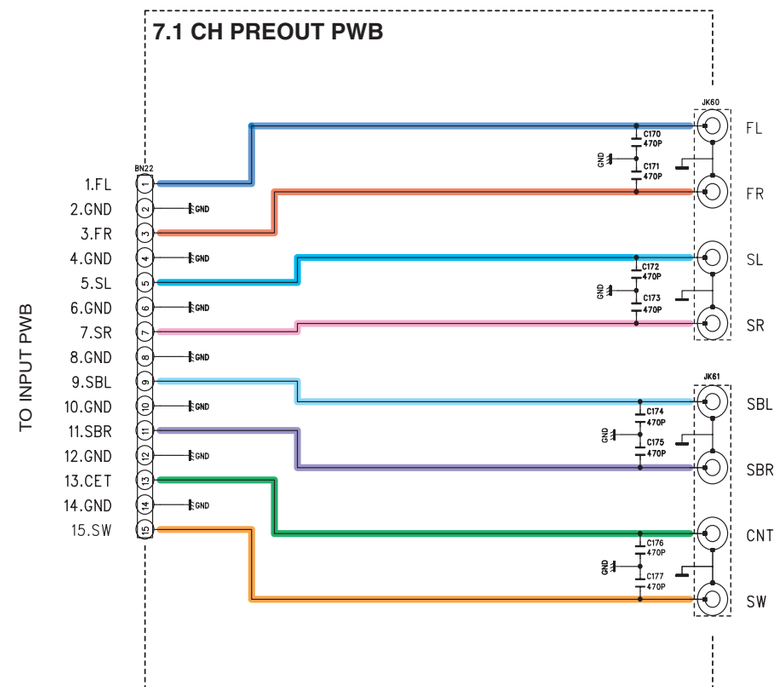
7.1 CH PREOUT PWB
TO INPUT PWB
1.FL
2.GND
3.FR
4.GND
5.SL
6.GND
7.SR
8.GND
9.SBL
10.GND
11.SBR
12.GND
13.CET
14.GND
15.SW
CN22
JK60
JK61
FL
FR
SL
SR
SBL
SBR
CNT
SW

REGULATOR PWB

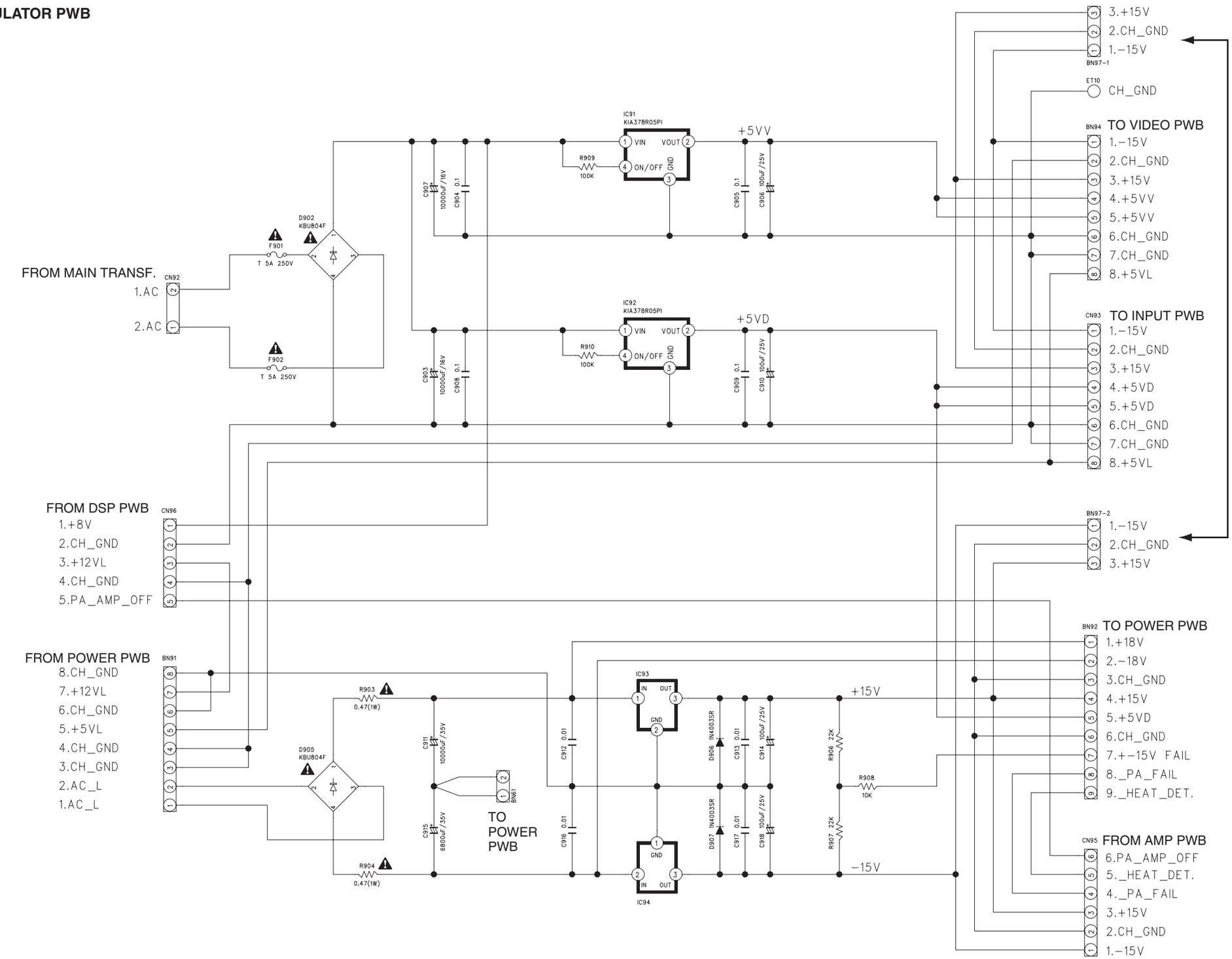

10. PARTS LOCATION

COMPONENT PWB A (SR8001 only)

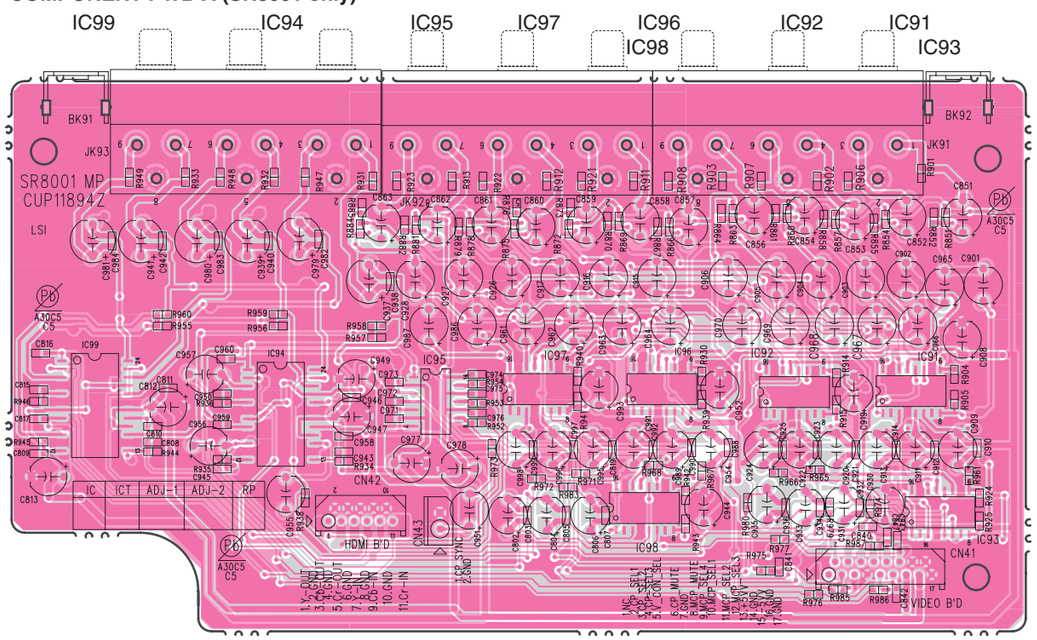

COMPONENT PWB B (SR8001 only)

Q851 Q852 Q853 Q854 Q855 Q856 Q857 Q858 Q859 Q860 Q861 Q862

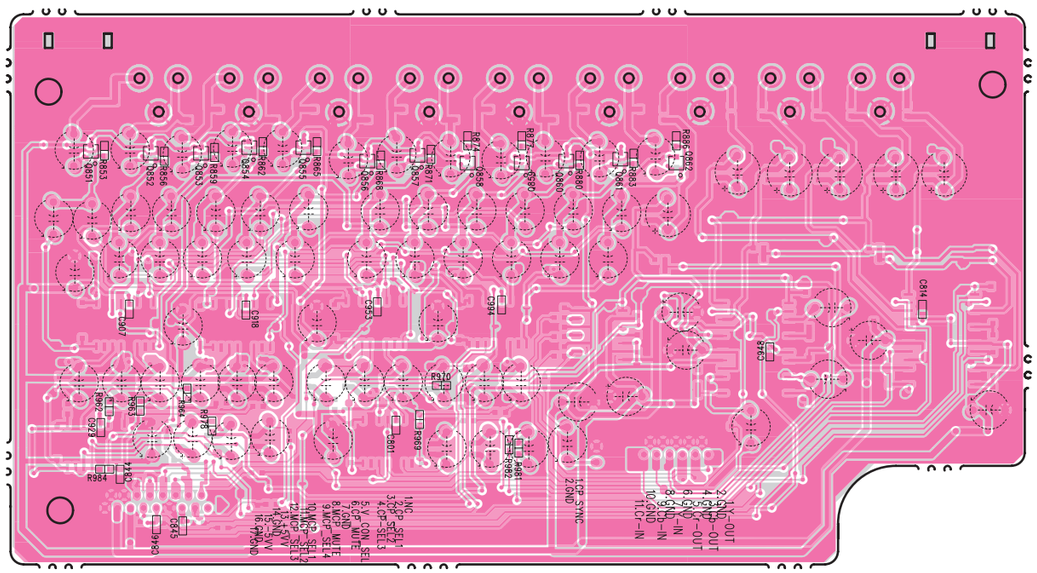

鉛フリー半田

半田付けには、鉛フリー半田 (Sn-Ag-Cu) を使用してください。

Lead-free Solder

When soldering, use the Lead-free Solder (Sn-Ag-Cu).

VIDEO PWB A

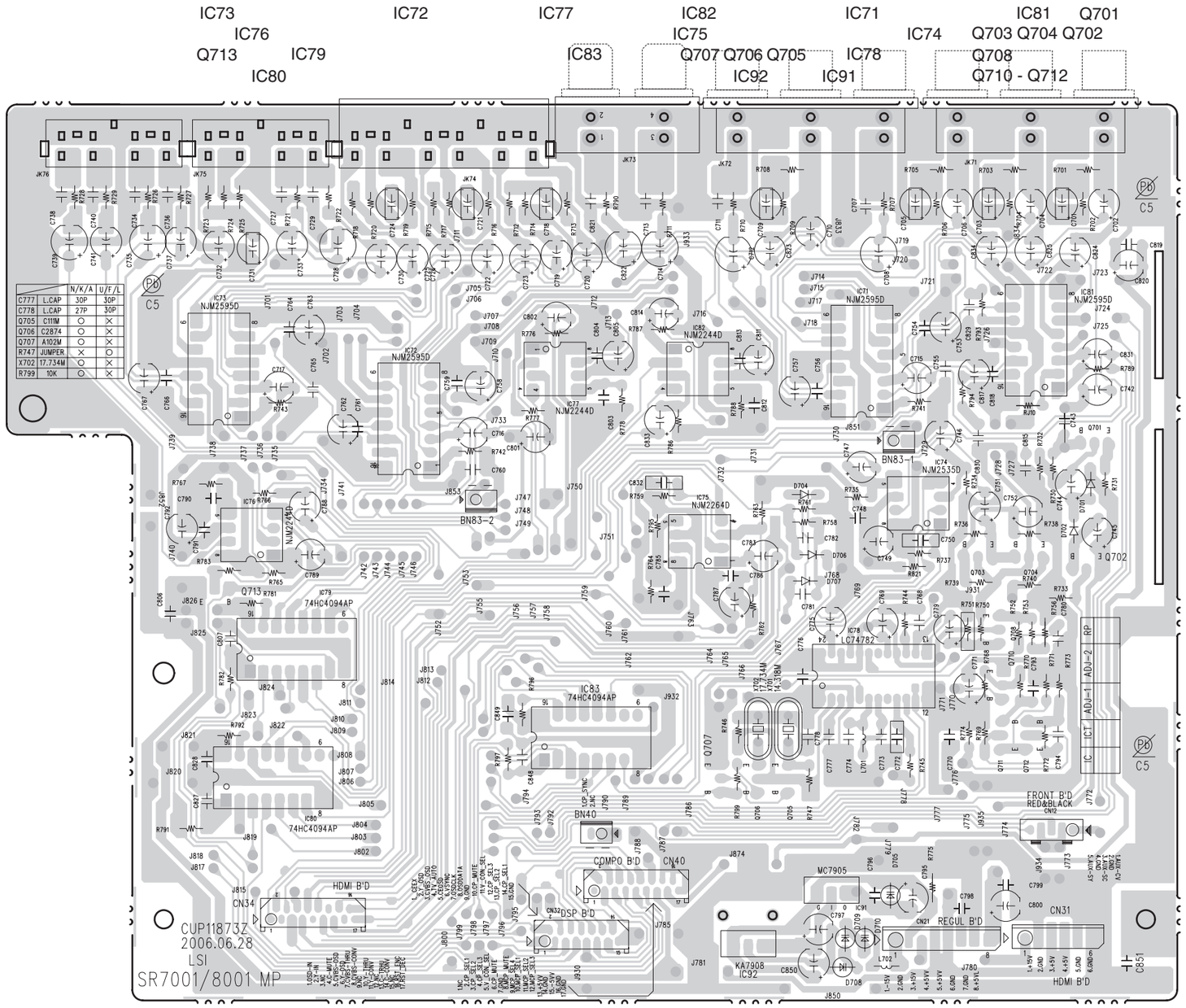

	N/K/A	U/F/L
C777 L.CAP	30P	30P
C778 L.CAP	27P	30P
Q705 C111M	○	×
Q706 C2874	○	×
Q707 A102M	○	×
R747 JUMPER	×	○
X702 17.734M	○	×
R799 10K	○	×

鉛フリー半田
半田付けには、鉛フリー半田 (Sn-Ag-Cu) を使用してください。

Lead-free Solder
When soldering, use the Lead-free Solder (Sn-Ag-Cu).

VIDEO PWB B

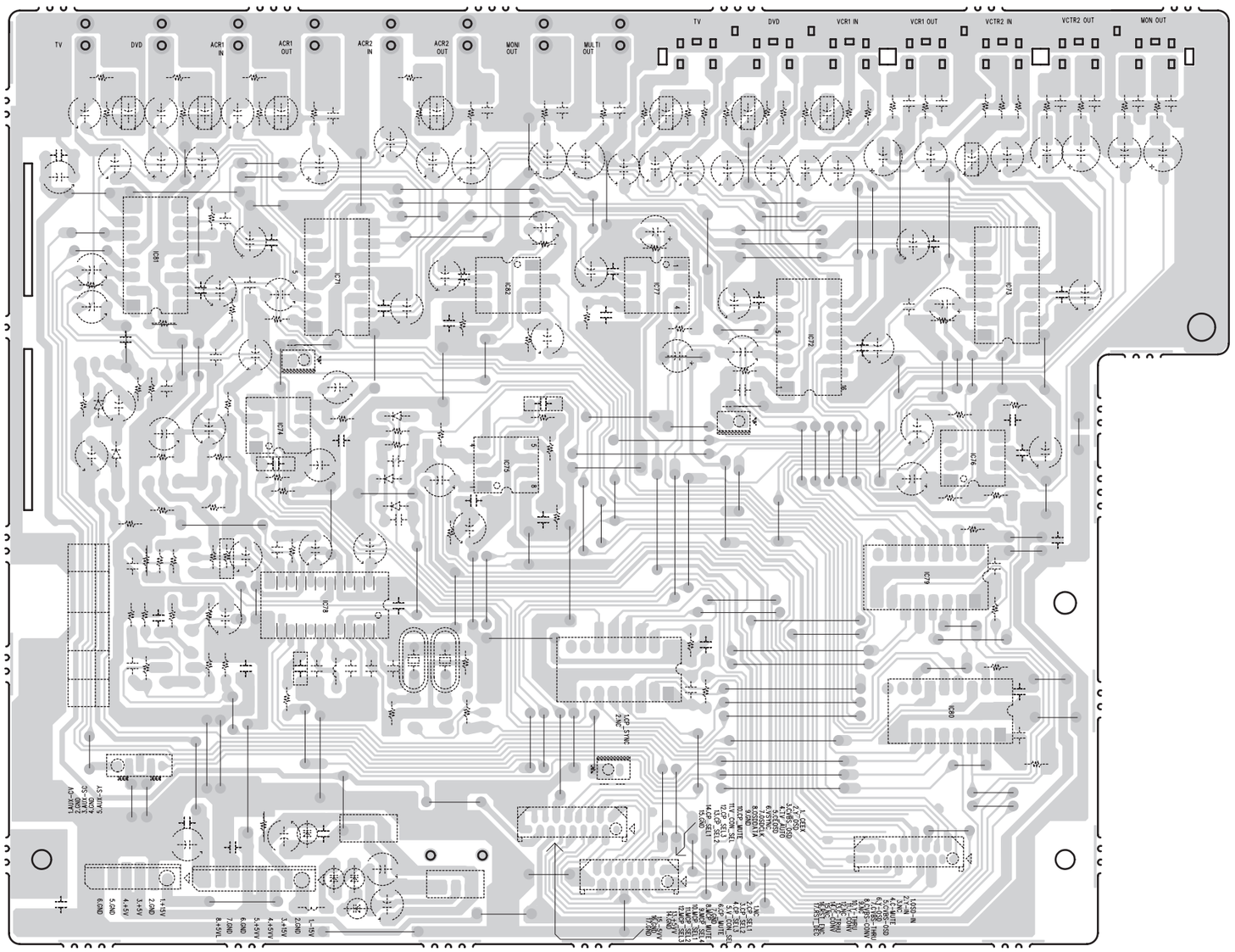

鉛フリー半田

半田付けには、鉛フリー半田 (Sn-Ag-Cu) を使用してください。

Lead-free Solder

When soldering, use the Lead-free Solder (Sn-Ag-Cu).

HDMI PWB A

IC11 IC13 IC15 IC17 IC40

Q101 Q102 IC12 Q105 Q106 IC14 Q109 Q110 IC16 Q113 Q114 IC18 Q301 IC43

Q104 Q111 Q108 Q107 Q112 Q103 Q116 Q115 Q303

IC19 IC20 Q117 Q118 IC21 IC22 IC23 IC41 IC44

IC97 IC93 IC35 IC36 IC37 IC38 IC67 IC68 IC66 IC70 IC69 IC65

IC96 IC98 IC32 IC31 IC39 IC63 Q605 Q606 IC71 IC95

IC92 IC99 Q901 IC42 Q302 IC64 Q805 Q806 Q801 IC62 Q604

IC94 IC90 Q816 - Q819 Q809 Q810 Q808 Q802

IC89 IC91 Q815 Q813 Q814 Q811 Q812 Q807 Q803 Q804 IC61 Q603 - Q601

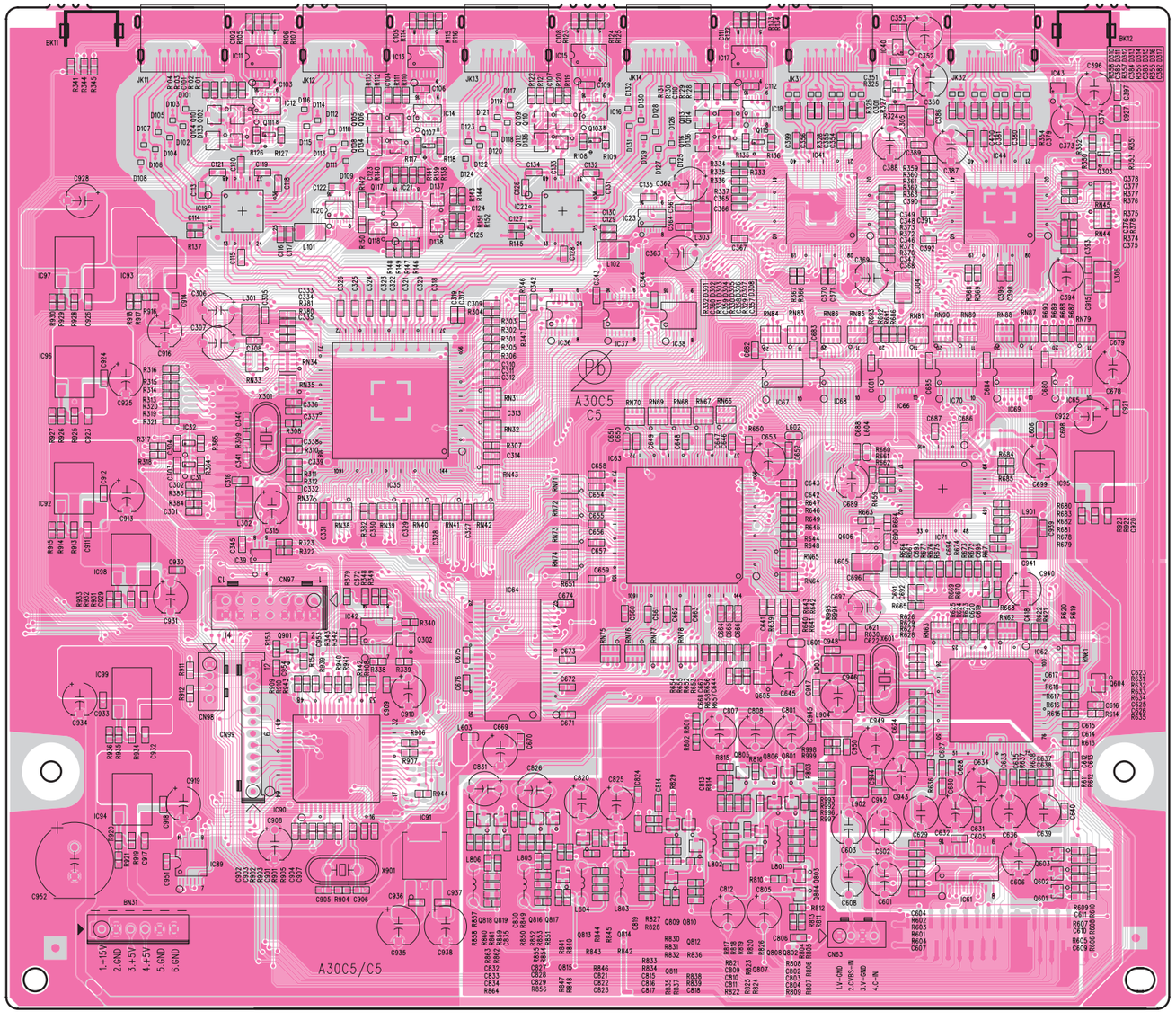

鉛フリー半田

半田付けには、鉛フリー半田 (Sn-Ag-Cu) を使用してください。

Lead-free Solder

When soldering, use the Lead-free Solder (Sn-Ag-Cu).

HDMI PWB B

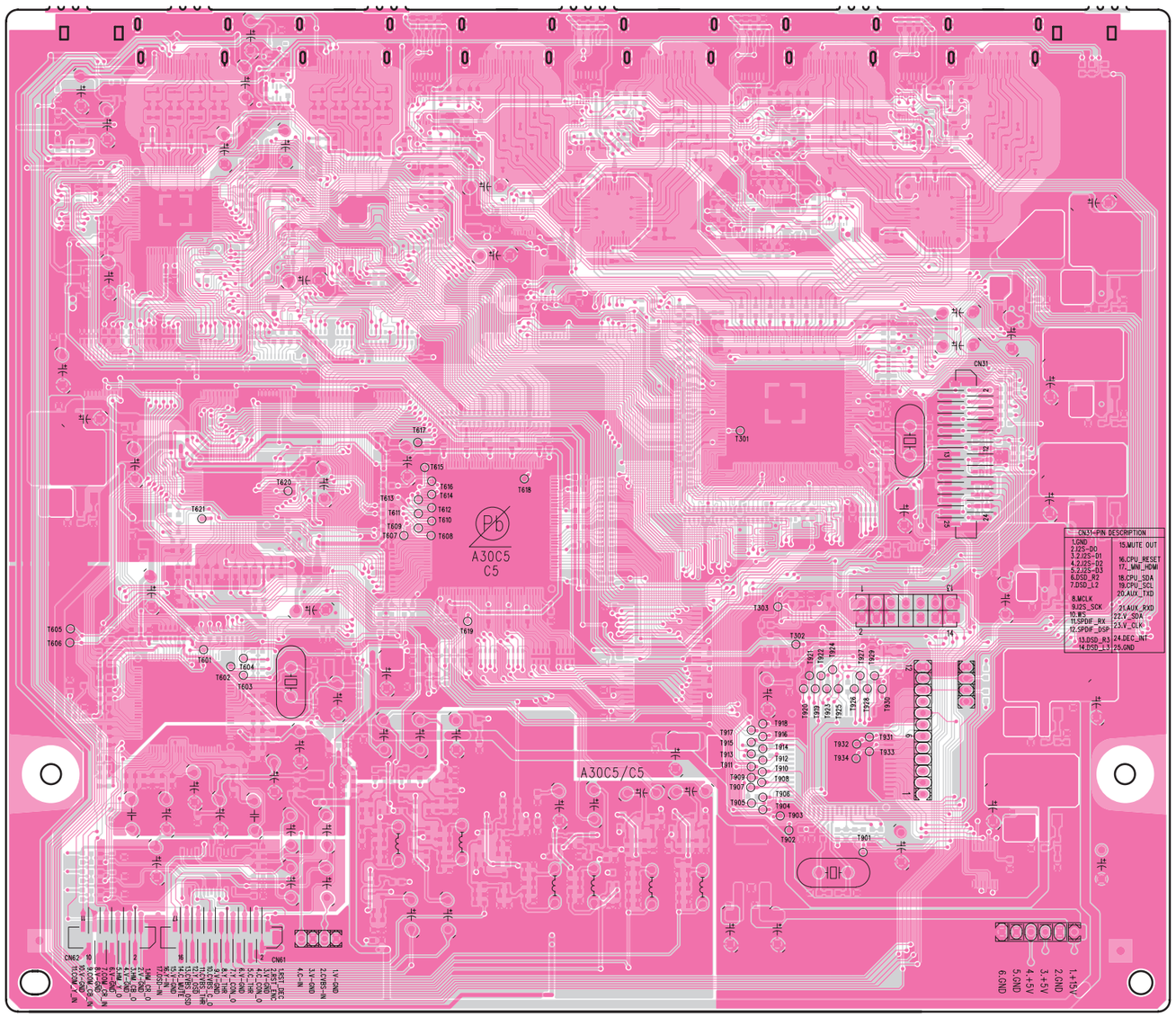

鉛フリー半田

半田付けには、鉛フリー半田 (Sn-Ag-Cu) を使用してください。

Lead-free Solder

When soldering, use the Lead-free Solder (Sn-Ag-Cu).

MX RADIO PWB A

Q811 IC51 ICU3 ICU1
Q801 IC61 Q619
IC62 Q613 - Q616

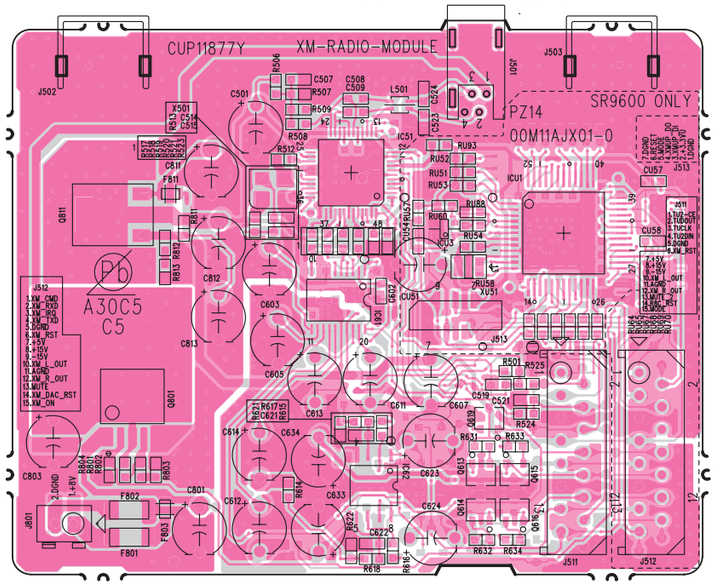

MX RADIO PWB B

ICU4 ICU2
ICU5 Q617
Q620 Q618

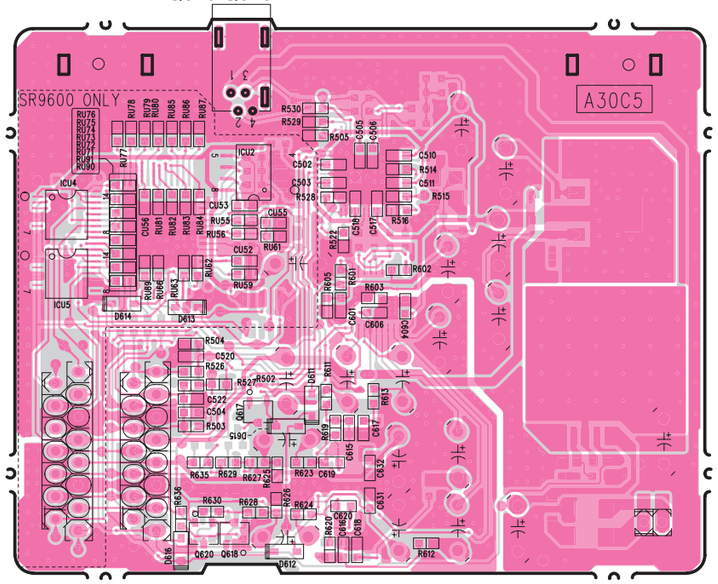

鉛フリー半田
半田付けには、鉛フリー半田 (Sn-Ag-Cu) を使用してください。

Lead-free Solder
When soldering, use the Lead-free Solder (Sn-Ag-Cu).

DSP PWB A

QC23 QC24 QC26 QC28 IC26
IC22 IC23 QC27 IC44
IC24 IC28 IC25 IC45
IC29 QC25 IC40 IC41
IC30 IC36 IC37 IC39 IC38 IC46
QC11 QC12 IC32 IC31 IC47
IC12 QC13 QC14 IC33 IC42
QC16 QC15 QC17 IC35 IC43
QC19 QC18 QC20 IC21
IC14 QC21 QC22 IC52 IC49 IC16 IC18 IC20
IC19 IC50 IC53 IC51 IC48 IC11 IC17 QC10
IC15 IC13

DIG IN
DIG IN
DIG IN
DIG OUT
RC-5 IN/OUT
MR-C IN/OUT
DC TRIG
IR FLASH
IR RCVR
IR EMITTER

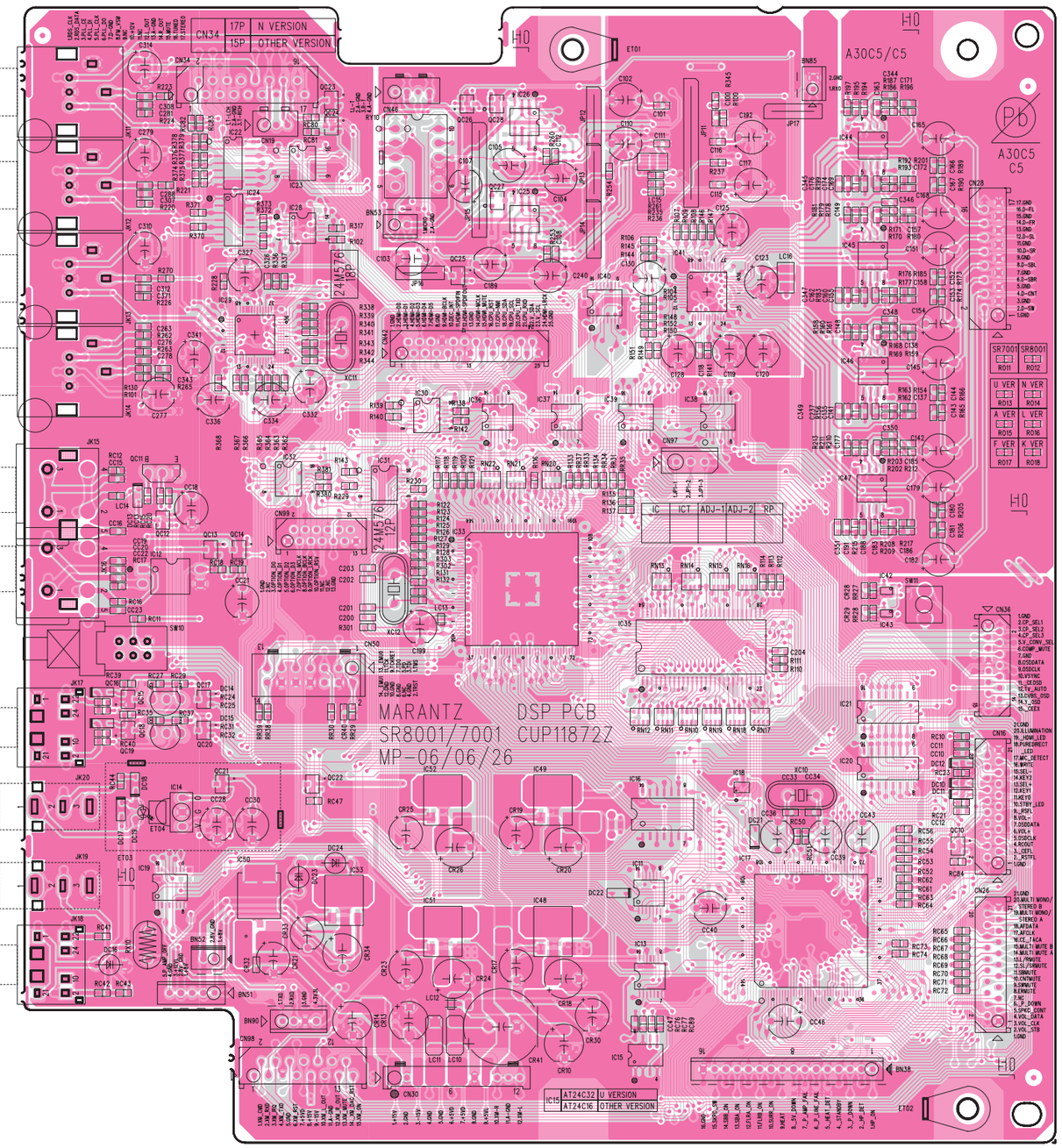

DSP PWB B

IC27
IC34

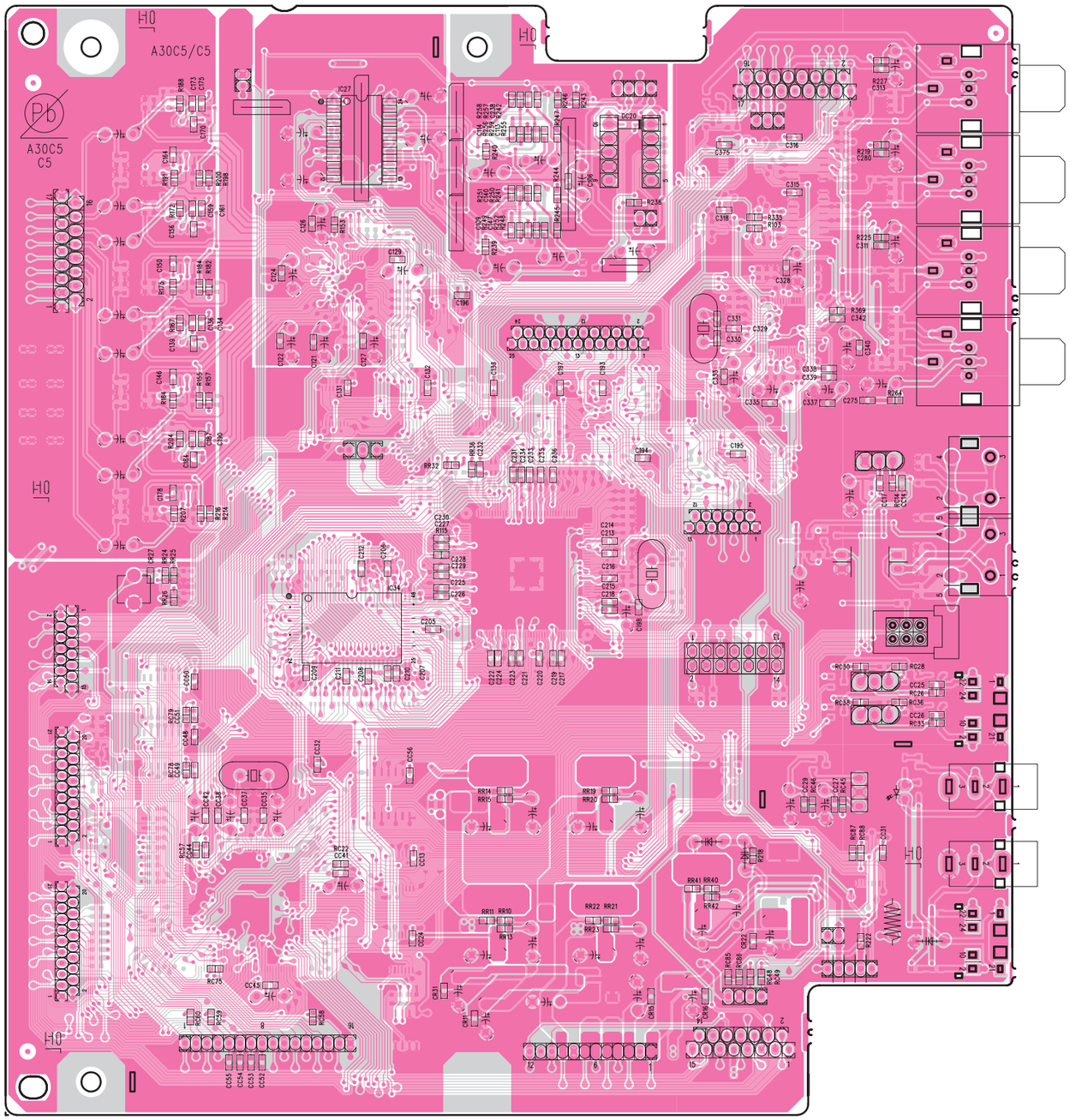

鉛フリー半田
半田付けには、鉛フリー半田 (Sn-Ag-Cu) を使用してください。

Lead-free Solder
When soldering, use the Lead-free Solder (Sn-Ag-Cu).

鉛フリー半田
半田付けには、鉛フリー半田 (Sn-Ag-Cu) を使用してください。

Lead-free Solder
When soldering, use the Lead-free Solder (Sn-Ag-Cu).

INPUT PWB A

IC27 IC33 IC35 Q205 - Q208
IC41 IC36 Q209 - Q212
IC21 IC22 IC37 Q213 - Q216
IC42 IC28 IC38 Q217 - Q220
IC43 Q201 IC34 IC39 Q211 - Q224
IC44 IC29 Q203 IC32 IC40 Q225 - Q228
IC23 - IC26 Q229 - Q244 Q245

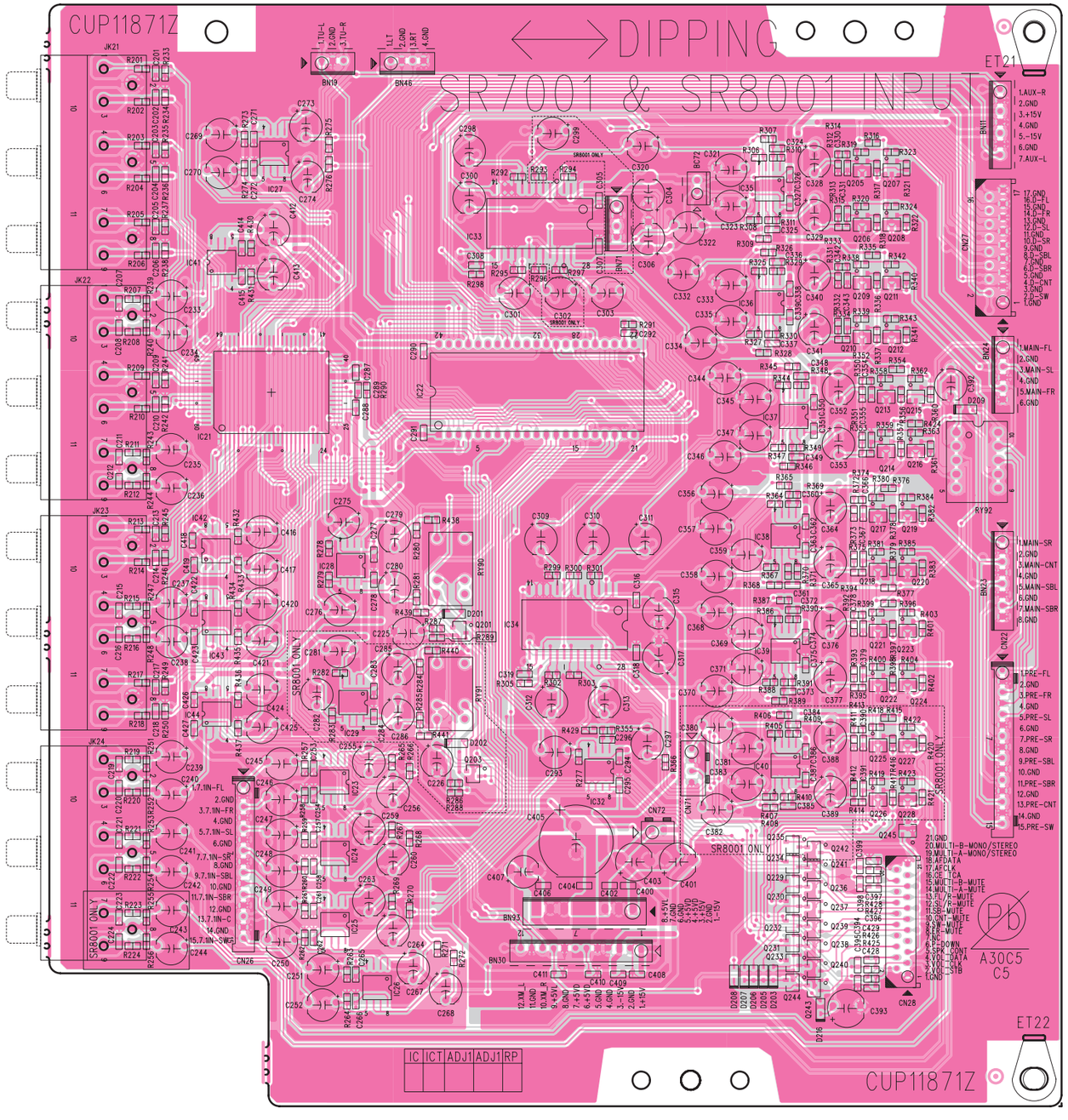

INPUT PWB B

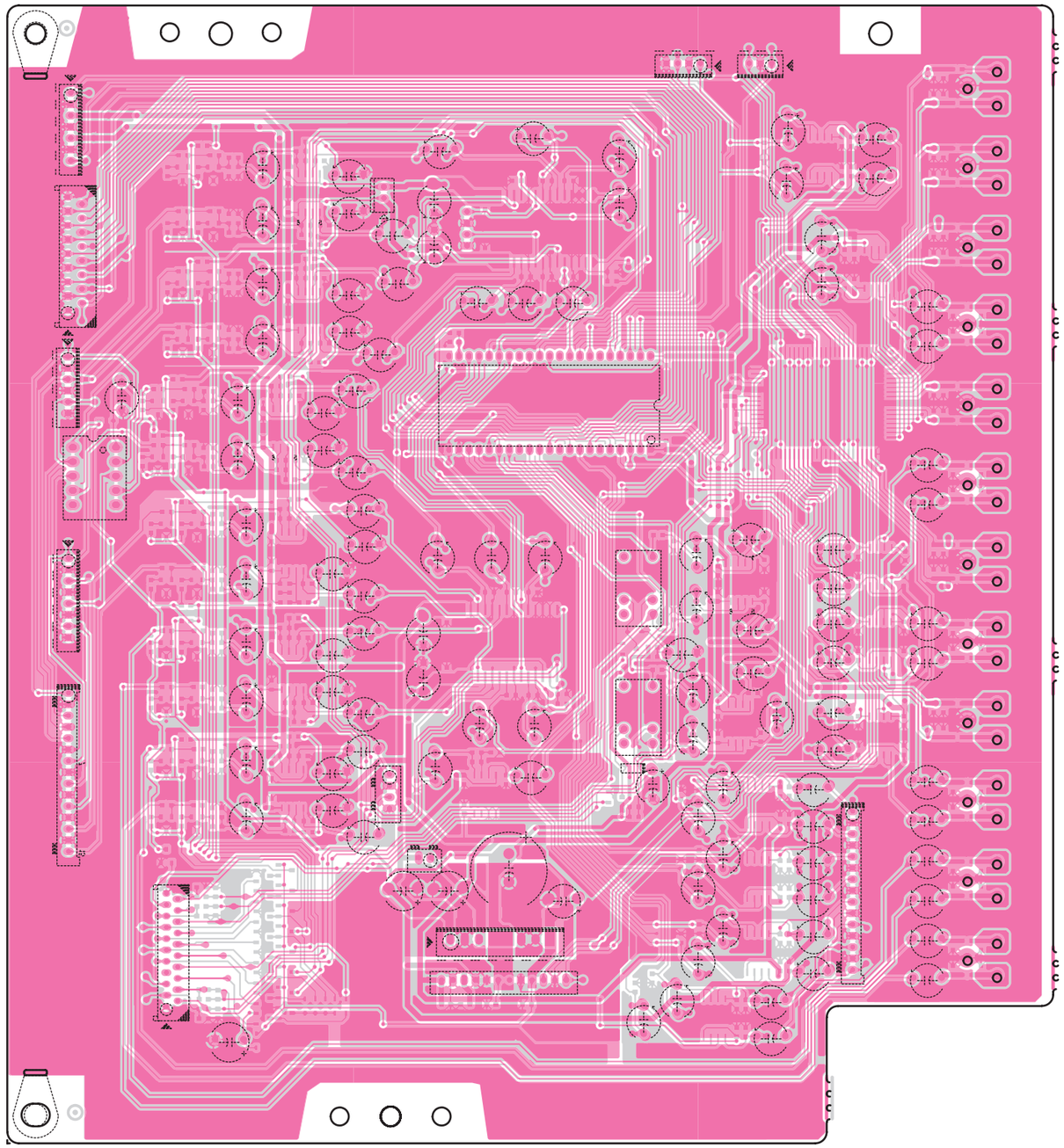

鉛フリー半田
半田付けには、鉛フリー半田 (Sn-Ag-Cu) を使用してください。

Lead-free Solder
When soldering, use the Lead-free Solder (Sn-Ag-Cu).

AMP PWB

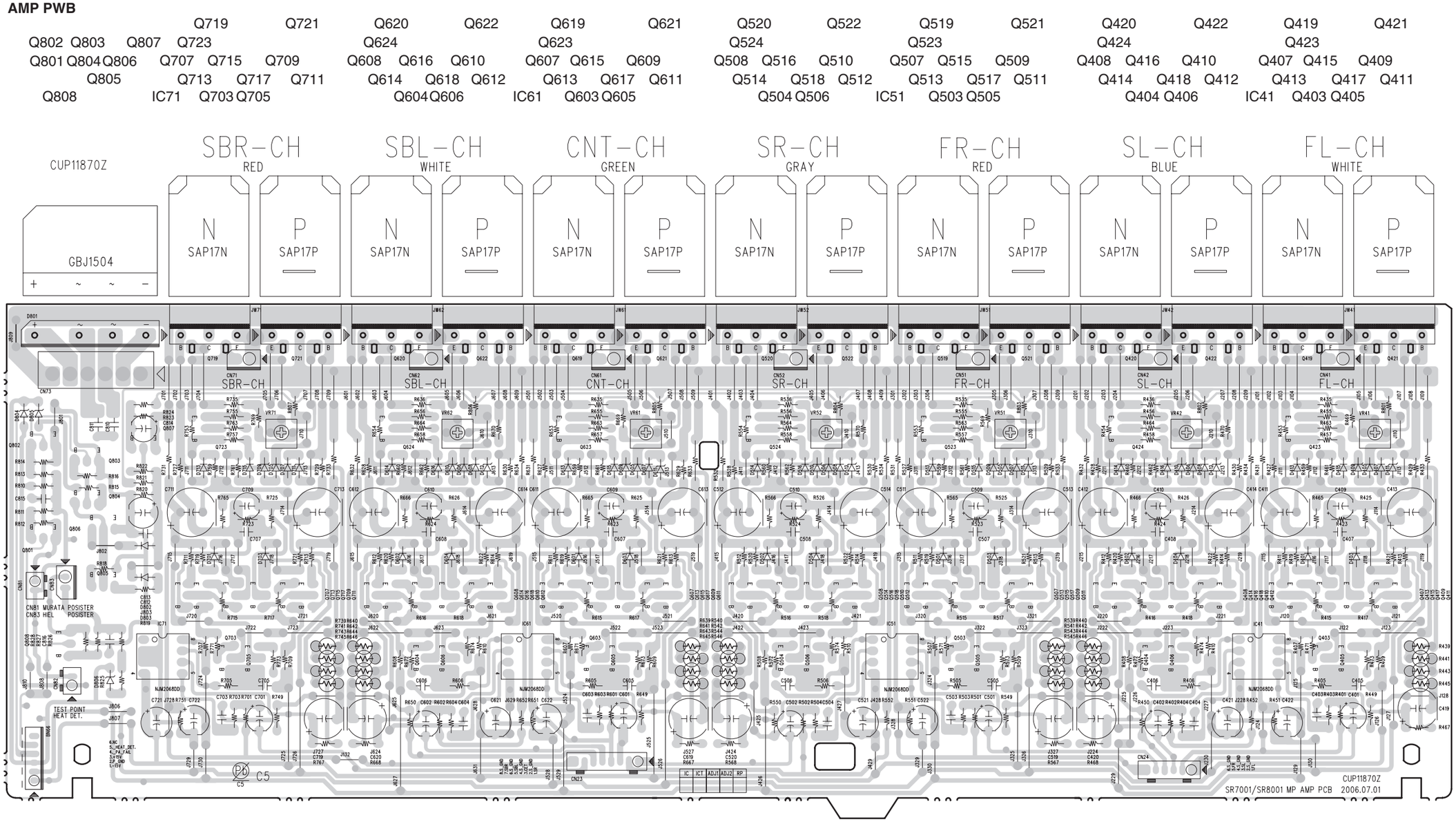

鉛フリー半田

半田付けには、鉛フリー半田 (Sn-Ag-Cu) を使用してください。

Lead-free Solder

When soldering, use the Lead-free Solder (Sn-Ag-Cu).

AMP PWB

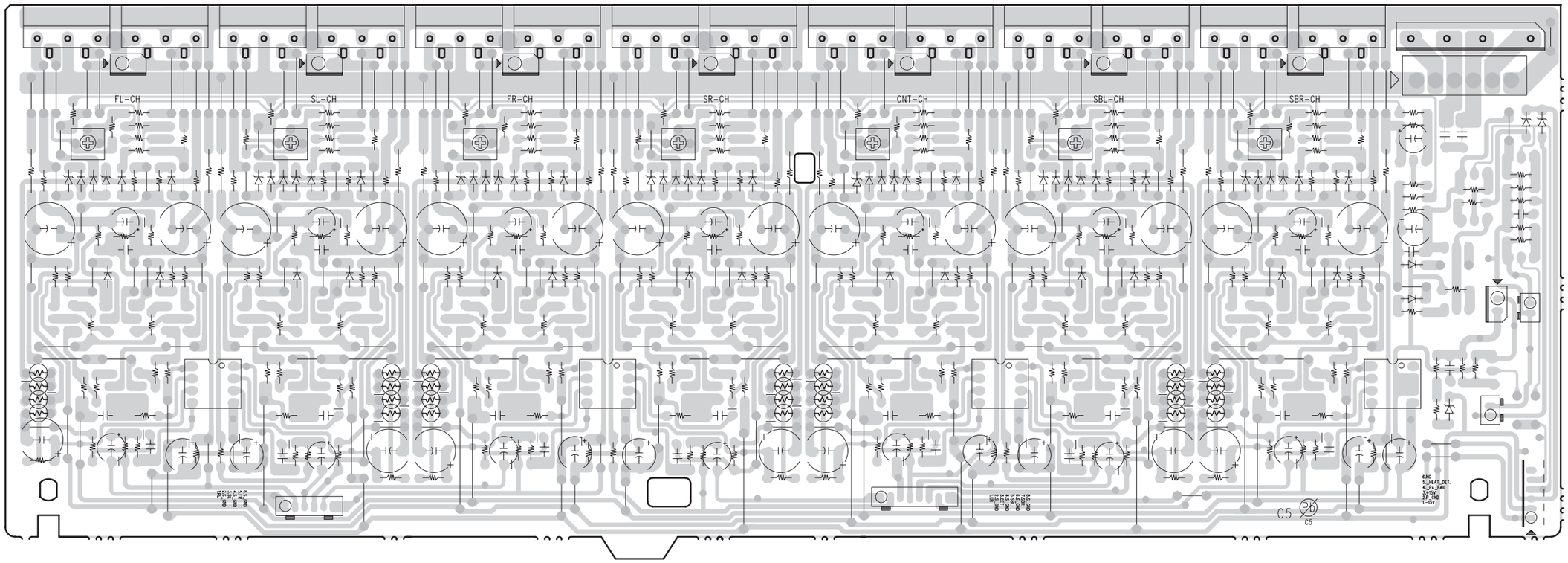

鉛フリー半田
半田付けには、鉛フリー半田 (Sn-Ag-Cu) を使用してください。

Lead-free Solder
When soldering, use the Lead-free Solder (Sn-Ag-Cu).

POWER PWB A

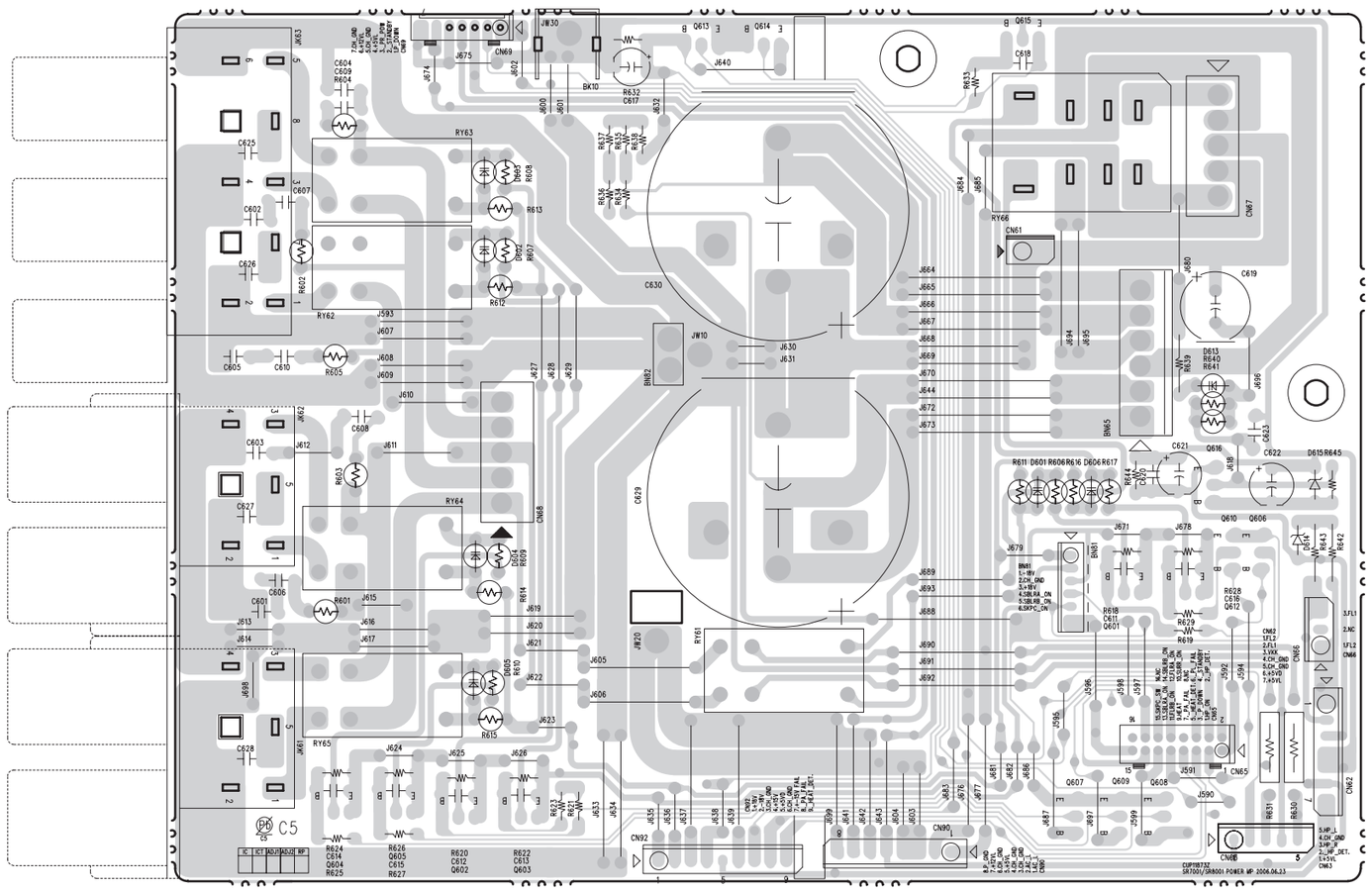

鉛フリー半田
半田付けには、鉛フリー半田 (Sn-Ag-Cu) を使用してください。

Lead-free Solder
When soldering, use the Lead-free Solder (Sn-Ag-Cu).

POWER PWB B

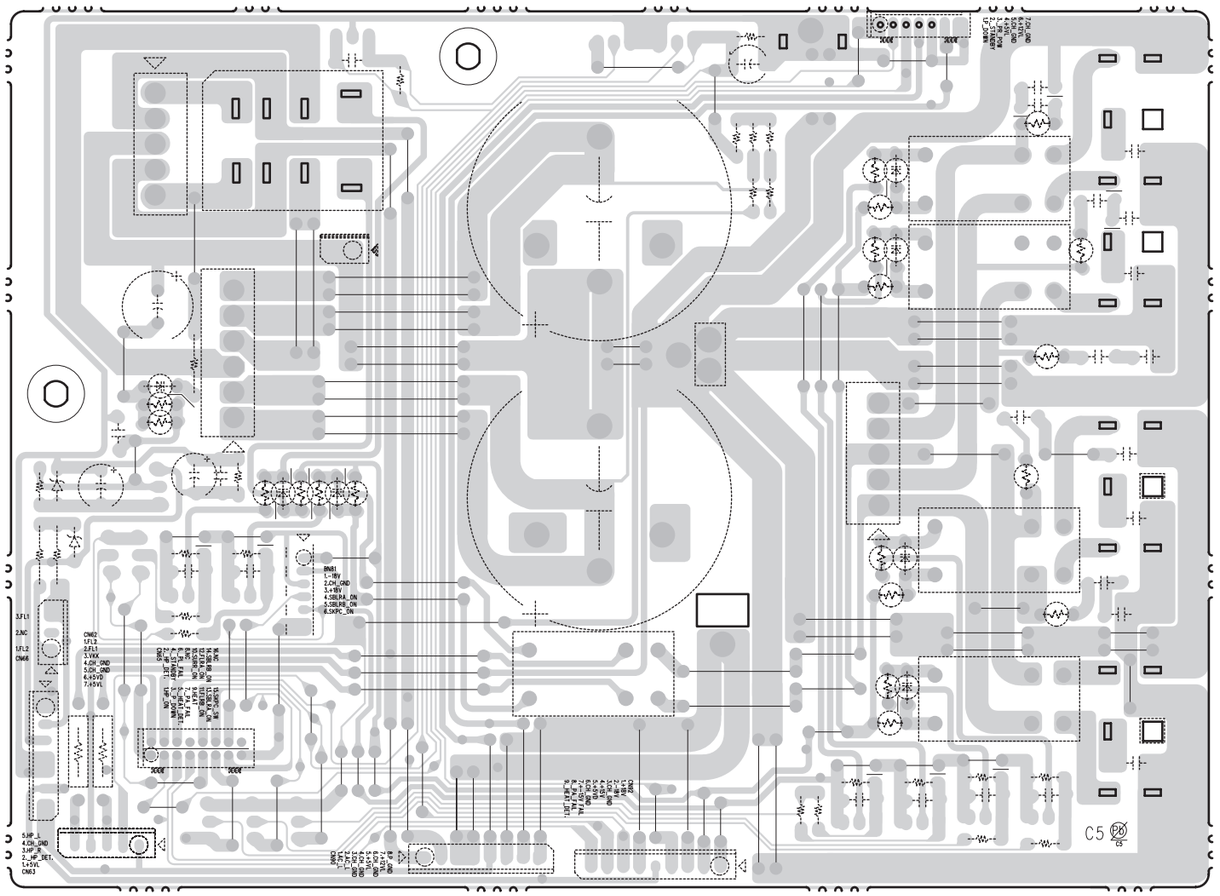

REG PWB A

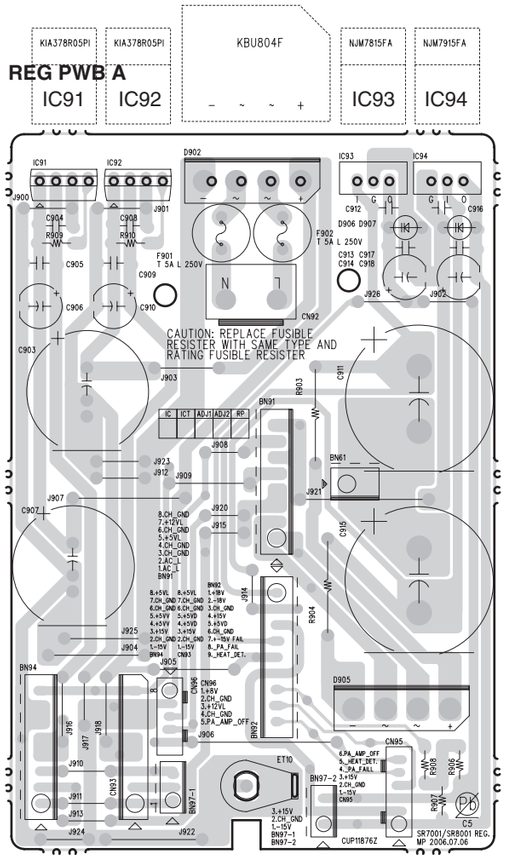

REG PWB B

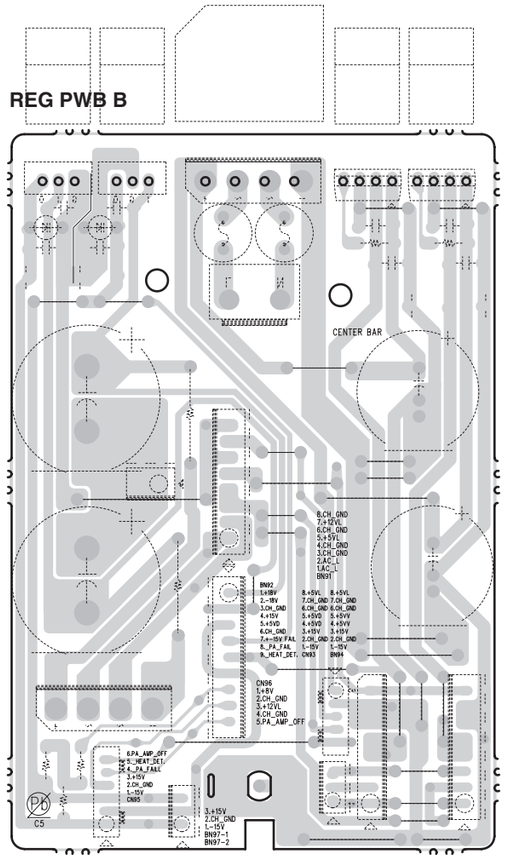

鉛フリー半田

半田付けには、鉛フリー半田 (Sn-Ag-Cu) を使用してください。

Lead-free Solder

When soldering, use the Lead-free Solder (Sn-Ag-Cu).

Q807 Q806 Q812

SELECTOR PWB A

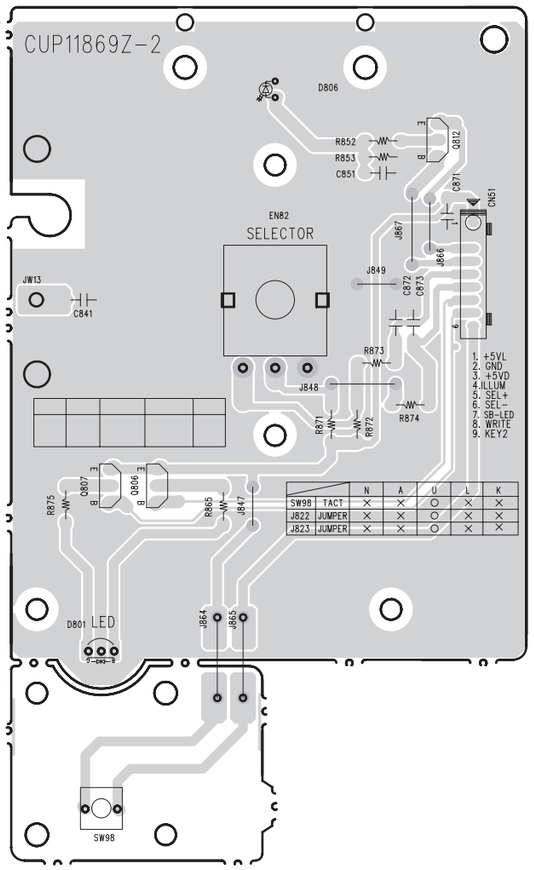

SELECTOR PWB B

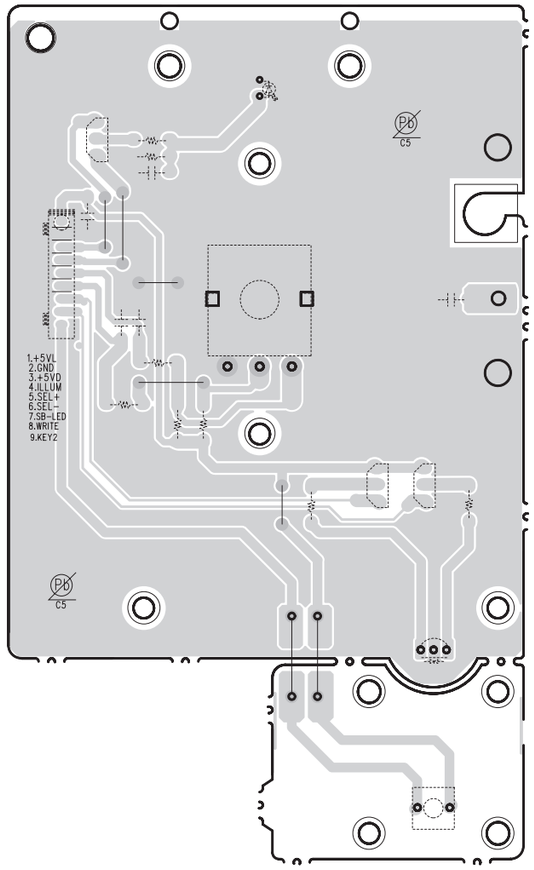

TACT PWB A

TACT PWB B

鉛フリー半田

半田付けには、鉛フリー半田 (Sn-Ag-Cu) を使用してください。

Lead-free Solder

When soldering, use the Lead-free Solder (Sn-Ag-Cu).

GUIDE PWB A

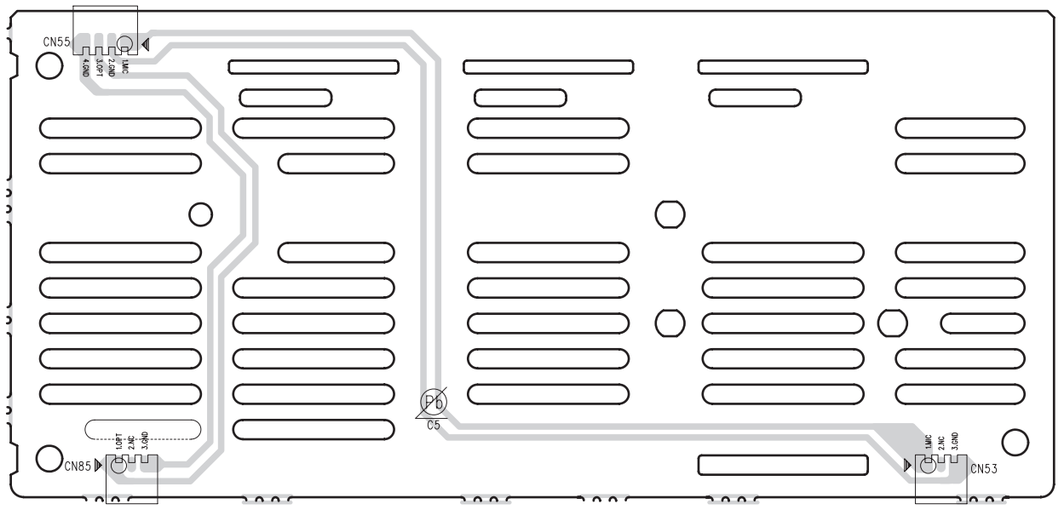

FRONT PWB A

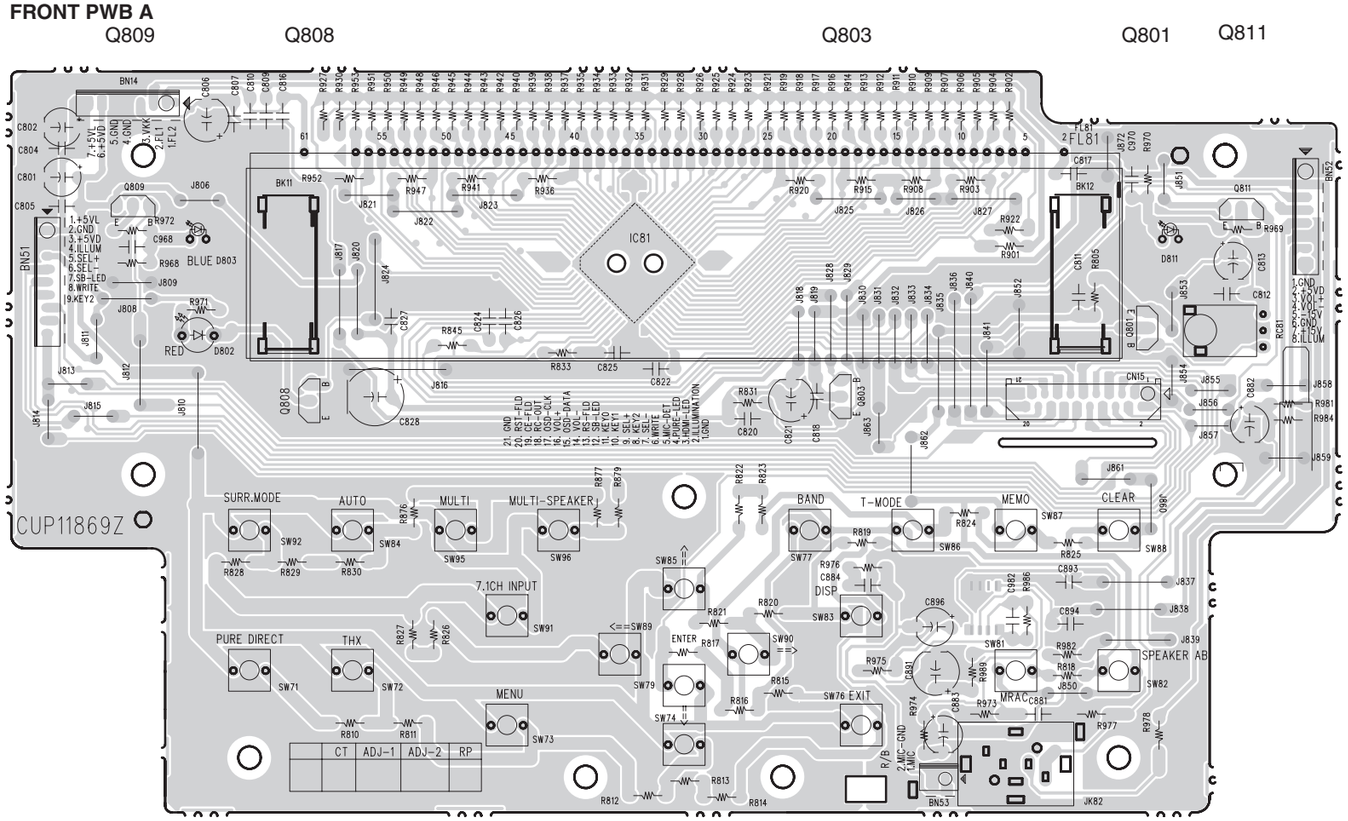

FRONT PWB B

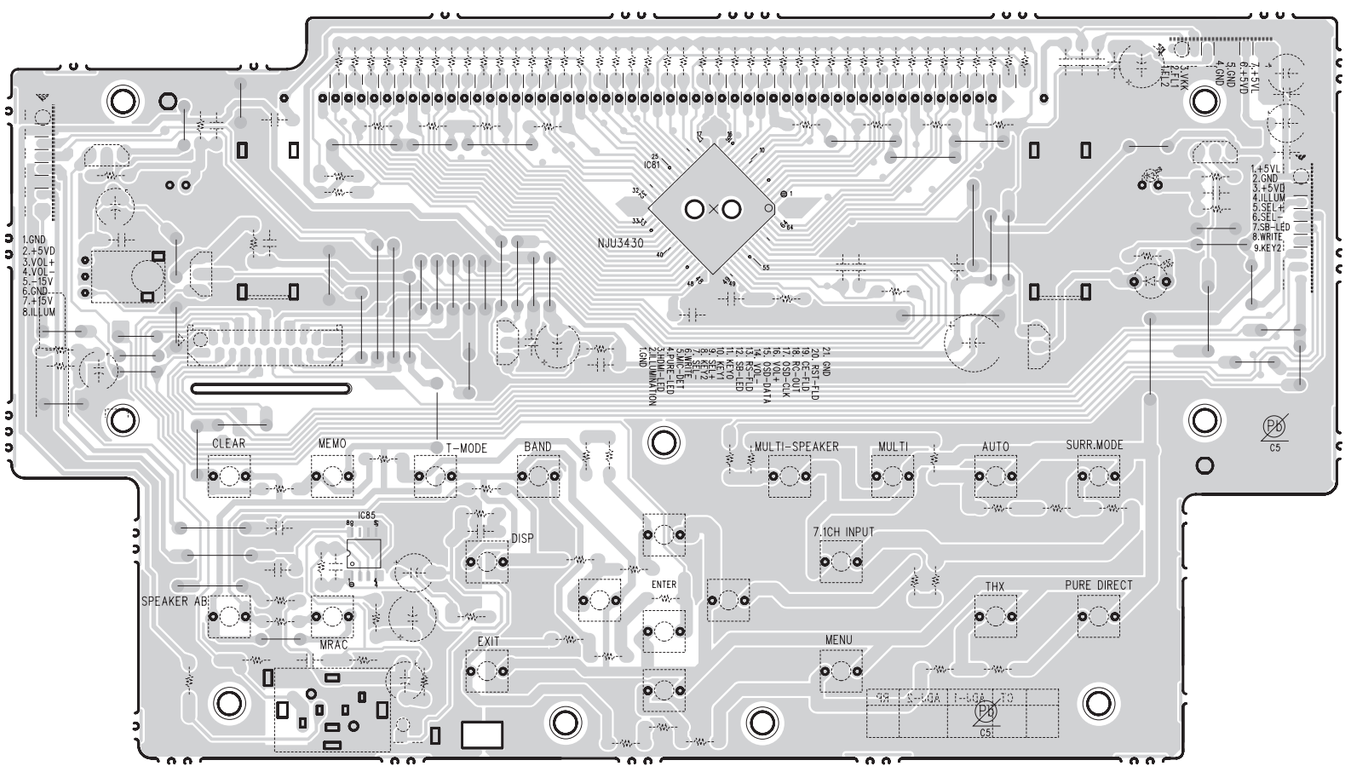

鉛フリー半田
半田付けには、鉛フリー半田 (Sn-Ag-Cu) を使用してください。

Lead-free Solder
When soldering, use the Lead-free Solder (Sn-Ag-Cu).

VOLUME PWB A

Q813 IC83

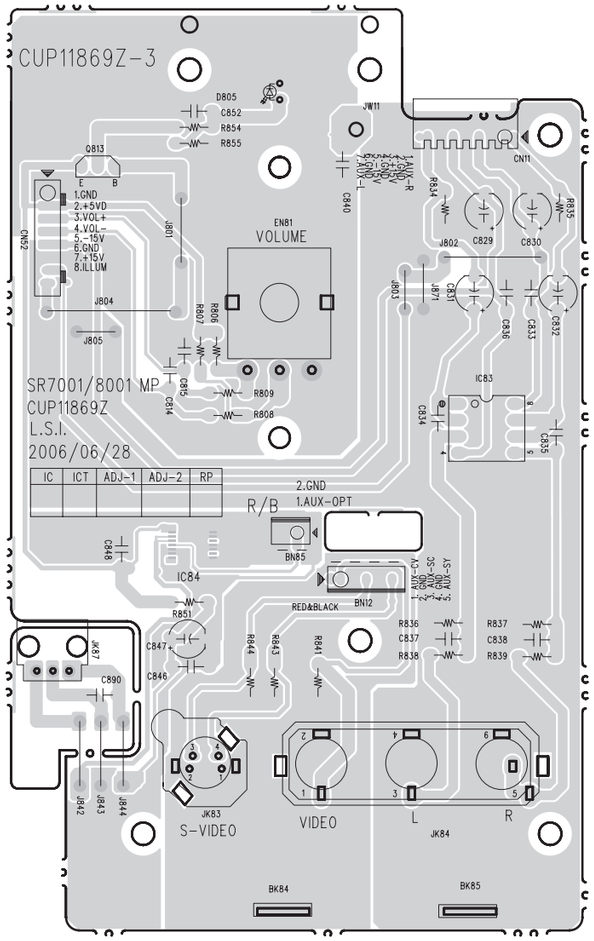

VOLUME PWB B

IC84

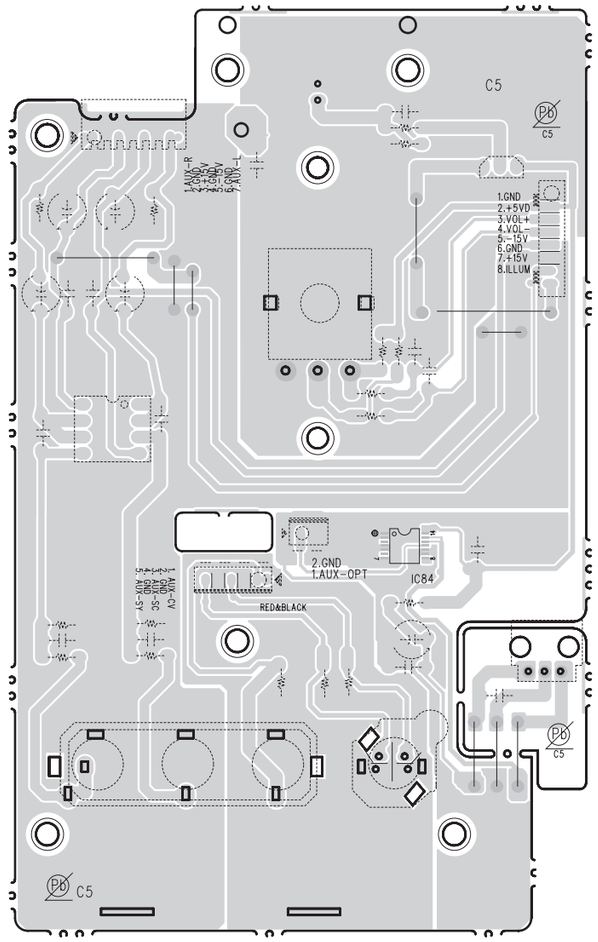

7.1CH INPUT PWB A

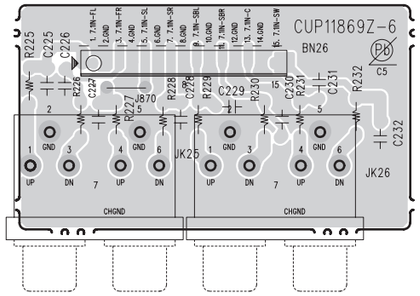

H/P PWB A

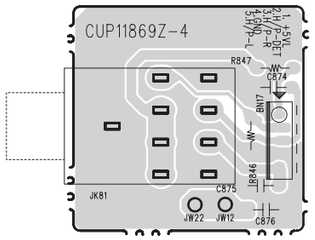

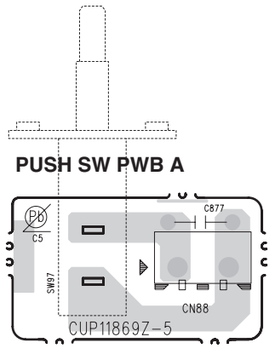

鉛フリー半田

半田付けには、鉛フリー半田 (Sn-Ag-Cu) を使用してください。

Lead-free Solder

When soldering, use the Lead-free Solder (Sn-Ag-Cu).

STAND BY PWB A

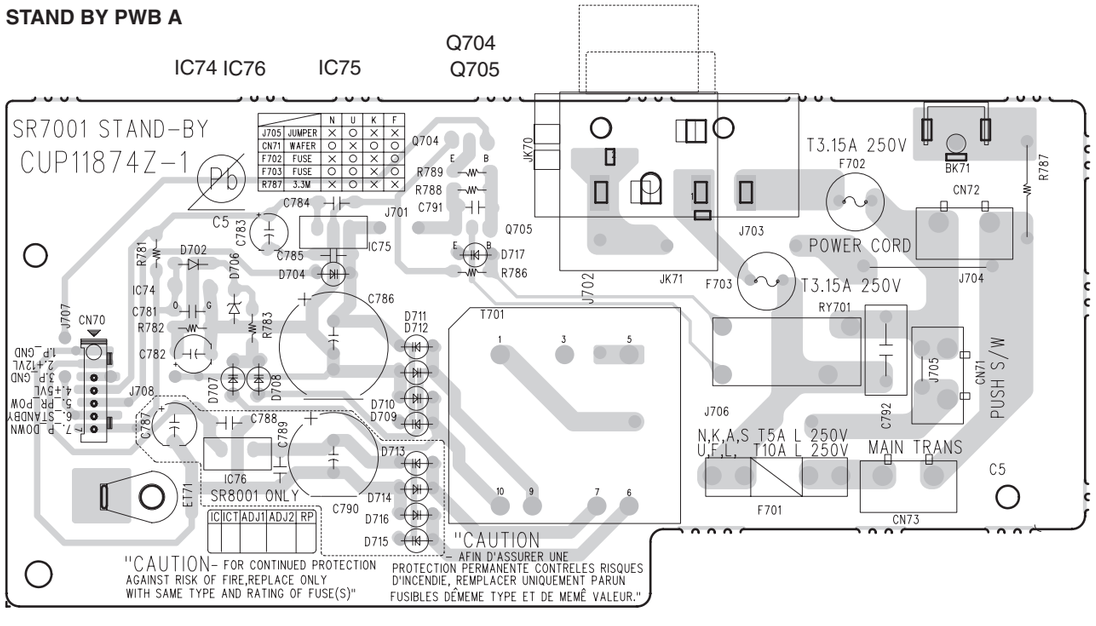

STAND BY PWB B

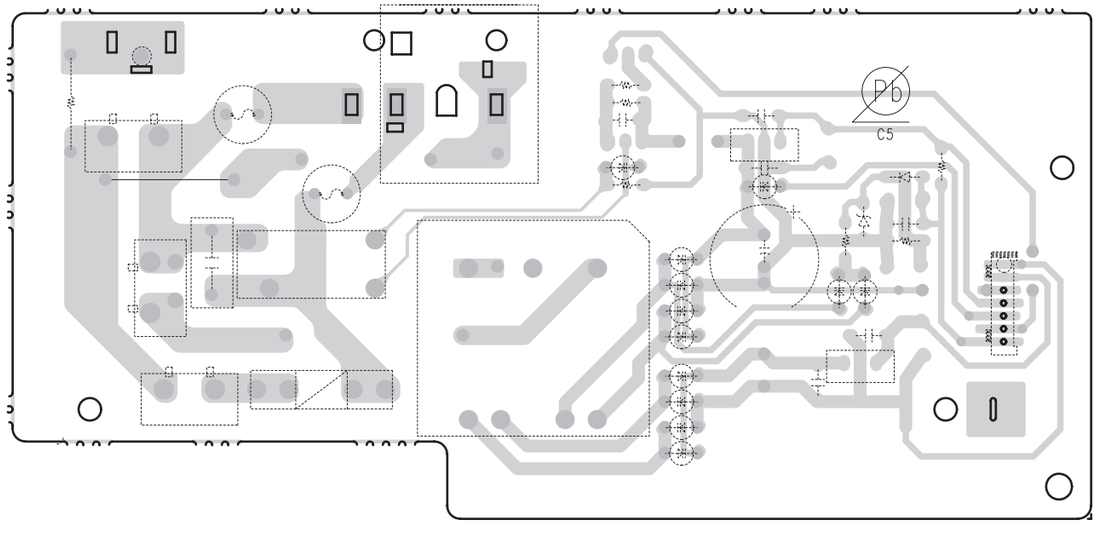

SBLR SPEAKER PWB A

Q803 Q804
Q801 Q802

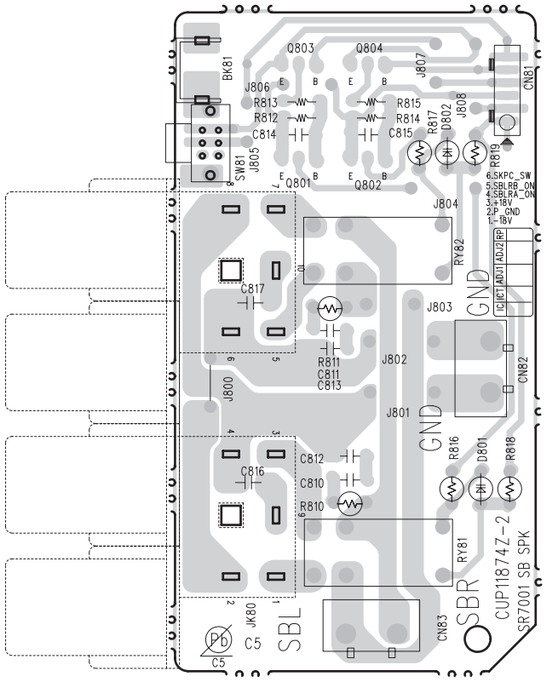

RS-232C PWB A

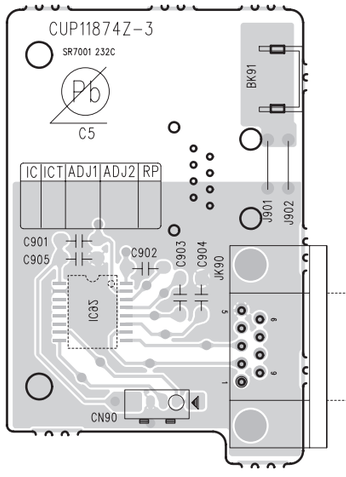

RS-232C PWB B

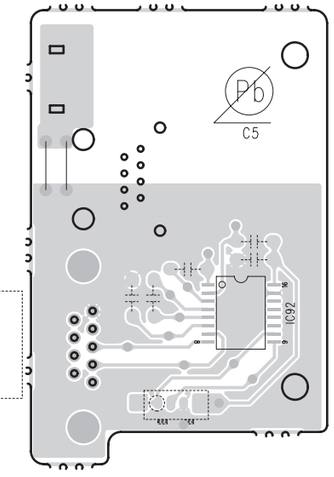

7.1 CH PREOUT PWB A

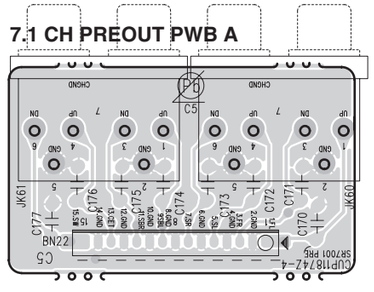

鉛フリー半田
半田付けには、鉛フリー半田 (Sn-Ag-Cu) を使用してください。

Lead-free Solder
When soldering, use the Lead-free Solder (Sn-Ag-Cu).

11. EXPLODED VIEW AND PARTS LIST

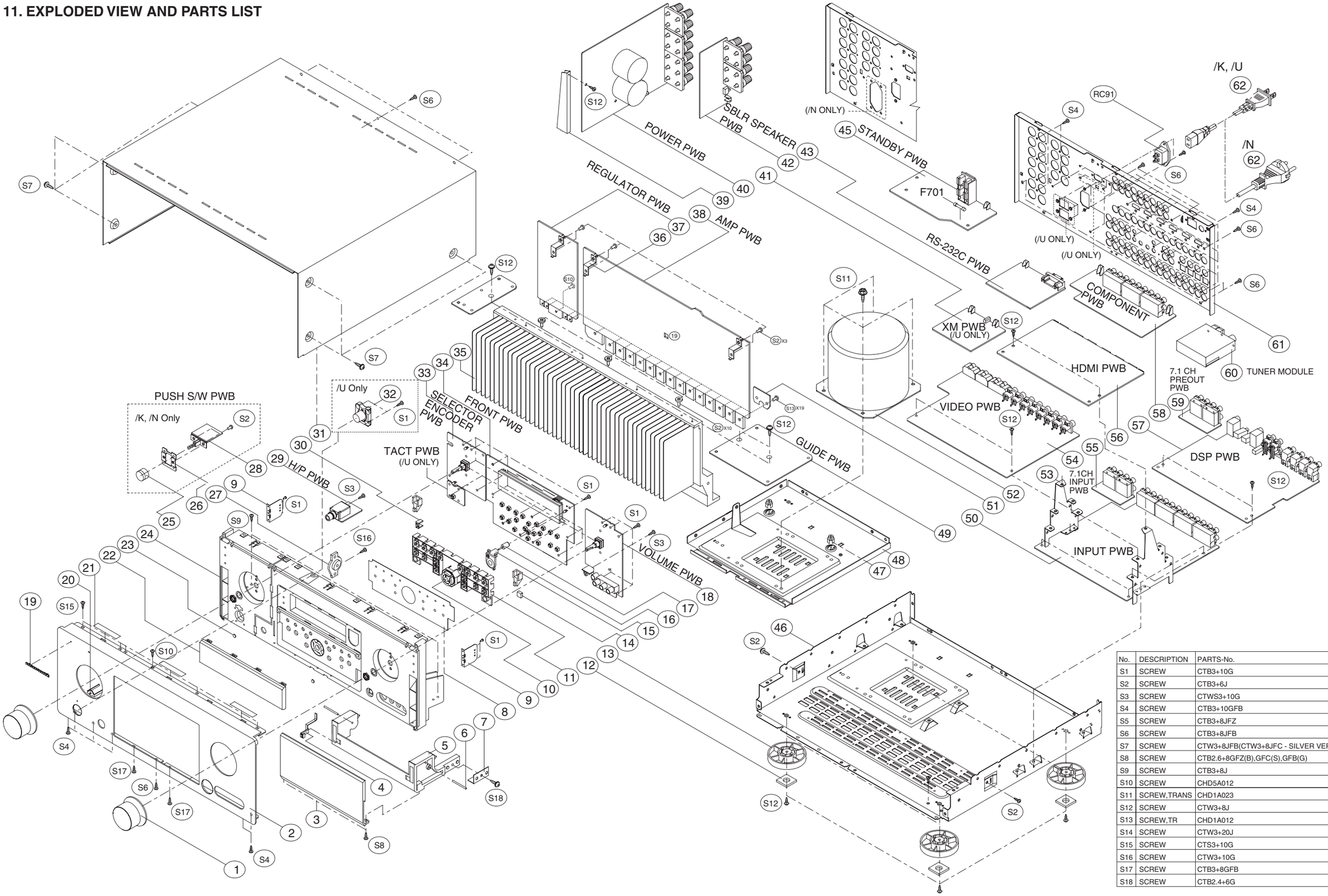

No.	DESCRIPTION	PARTS-No.
S1	SCREW	CTB3+10G
S2	SCREW	CTB3+6J
S3	SCREW	CTWS3+10G
S4	SCREW	CTB3+10GFB
S5	SCREW	CTB3+8JFZ
S6	SCREW	CTB3+8JFB
S7	SCREW	CTW3+8JFB(CTW3+8JFC - SILVER VER.)
S8	SCREW	CTB2.6+8GFZ(B),GFC(S),GFB(G)
S9	SCREW	CTB3+8J
S10	SCREW	CHD5A012
S11	SCREW,TRANS	CHD1A023
S12	SCREW	CTW3+8J
S13	SCREW,TR	CHD1A012
S14	SCREW	CTW3+20J
S15	SCREW	CTS3+10G
S16	SCREW	CTW3+10G
S17	SCREW	CTB3+8GFB
S18	SCREW	CTB2.4+6G

P.W.B. NAME	POS. NO.	VERS. COLOR	PART NO. (FOR EUR)	PART NO. (MZ)	PART NAME	DESCRIPTION	
	1	/N1B	00M28AW154010	00M28AW154010	KNOB	MASTER KNOB (BLACK)	HGK1A090YA
	1	/N1G	00M28AW154020	00M28AW154020	KNOB	MASTER KNOB (GOLD)	HGK1A090ZA
	1	/N1S	00M28AW154030	00M28AW154030	KNOB	MASTER KNOB (SILVER)	HGK1A090XA
	1	/U1B	nsp	00M28AW154010	KNOB	MASTER KNOB (BLACK)	HGK1A090YA
	2	/N1B	00M06CW248010	00M06CW248010	PANEL	FRONT AL PANEL (BLACK)	CKM1A159QC23
	2	/N1G	00M06CW248110	00M06CW248110	PANEL	FRONT AL PANEL (GOLD)	CKM1A159QC24
	2	/N1S	00M06CW248210	00M06CW248210	PANEL	FRONT AL PANEL (SILVER)	CKM1A159QC40
	2	/U1B	nsp	00M06CW248020	PANEL	FRONT AL PANEL (BLACK)	CKM1A159PC23
	3	/N1B	00M05CW162010	00M05CW162010	DOOR	DOOR FRONT (AL) BLACK	CKM1A160ZC23
	3	/N1G	00M05CW162110	00M05CW162110	DOOR	DOOR FRONT (AL) GOLD	CKM1A160YC24
	3	/N1S	00M05CW162210	00M05CW162210	DOOR	DOOR FRONT (AL) SILVER	CKM1A160YC40
	3	/U1B	nsp	00M05CW162010	DOOR	DOOR FRONT (AL) BLACK	CKM1A160ZC23
	4		nsp	nsp	CONTACTOR	EARTH PLATE	CMC1A251
	5	/N1B	00M05CW271050	00M05CW271050	HOLDER	DOOR HOLDER BLACK	CKG2A046R4K92
	5	/N1G	00M05CW271110	00M05CW271110	HOLDER	DOOR HOLDER GOLD	CKG2A046RFD4
	5	/N1S	00M05CW271210	00M05CW271210	HOLDER	DOOR HOLDER SILVER	CKG2A046R6G13
	5	/U1B	nsp	00M05CW271050	HOLDER	DOOR HOLDER BLACK	CKG2A046R4K92
	6		00M10BW112010	00M10BW112010	SHAFT	SHAFT BASE	CDF1A018
	7		00M10BW104010	00M10BW104010	RETAINER	BRACKET BASE	CMD1A542
	8	/N1B	00M05CW063010	00M05CW063010	ESCUTCHEON	FRONT COVER BLACK	CGX1A358V
	8	/N1G	00M05CW063110	00M05CW063110	ESCUTCHEON	FRONT COVER GOLD	CGX1A358T
	8	/N1S	00M05CW063210	00M05CW063210	ESCUTCHEON	FRONT COVER SILVER	CGX1A358U
	8	/U1B	nsp	00M05CW063010	ESCUTCHEON	FRONT COVER BLACK	CGX1A358V
	9		nsp	nsp	BRACKET	SIDE BRACKET	CMD2A443
	10	/N1B	00M10BW270010	00M10BW270010	BUTTON	CURSOR BUTTON BLACK	CBT1A957ZK92
	10	/N1G	00M10BW270110	00M10BW270110	BUTTON	CURSOR BUTTON GLOD	CBT1A957RFZD4
	10	/N1S	00M10BW270210	00M10BW270210	BUTTON	CURSOR BUTTON SILVER	CBT1A957R6ZG13
	10	/U1B	nsp	00M10BW270010	BUTTON	CURSOR BUTTON BLACK	CBT1A957ZK92
	11	/N1B	00M10BW270020	00M10BW270020	BUTTON	FUNCTION BUTTON BLACK	CBT1A958K92
	11	/N1G	00M10BW270120	00M10BW270120	BUTTON	FUNCTION BUTTON GOLD	CBT1A958RFD4
	11	/N1S	00M10BW270220	00M10BW270220	BUTTON	FUNCTION BUTTON SILVER	CBT1A958R6G13
	11	/U1B	nsp	00M10BW270020	BUTTON	FUNCTION BUTTON BLACK	CBT1A958K92
	12		00M11BW056010	00M11BW056010	BUFFER	RUBBER CUSHION	KHG1A050
	13	/N1B	00M243W057010	00M243W057010	LEG	LEG GOLD/BLACK	CKL2A042H11
	13	/N1G	00M243W057010	00M243W057010	LEG	LEG GOLD/BLACK	CKL2A042H11
	13	/N1S	00M243W057210	00M243W057210	LEG	LEG FOR SILVER	CKL2A042H46
	13	/U1B	nsp	00M243W057010	LEG	LEG GOLD/BLACK	CKL2A042H11
	14		00M10BW305010	00M10BW305010	MAGNET	MAGNET BASE	CJC1A008
	15		00M05CW355050	00M05CW355050	LENS	INDICATOR VOL/SELECTOR	CGL1A249
	16		nsp	nsp	HOLDER	HOLDER INDICATOR VOL/SEL	CKG1A048R4K92
	17		00M03CW355010	00M03CW355010	LENS	HDMI INDICATOR	CGL1A245
	18	/N1B	nsp	nsp	PWB ASSY	VOLUME PWB ASSY	COP11869H
	18	/N1G	nsp	nsp	PWB ASSY	VOLUME PWB ASSY	COP11869H
	18	/N1S	nsp	nsp	PWB ASSY	VOLUME PWB ASSY	COP11869J
	18	/U1B	nsp	nsp	PWB ASSY	VOLUME PWB ASSY	COP11869I
	19	/N1B	00M24AW251010	00M24AW251010	BADGE	NEW MZ BADGE	CGB1A117
	19	/N1G	00M24AW251010	00M24AW251010	BADGE	NEW MZ BADGE	CGB1A117
	19	/N1S	00M24AW251020	00M24AW251020	BADGE	NEW MZ BADGE SILVER	CGB1A117G
	19	/U1B	nsp	00M24AW251010	BADGE	NEW MZ BADGE	CGB1A117
	20		00M10BW355010	00M10BW355010	LENS	INDICATOR POWER	CGL1A231
	21		nsp	nsp	TAPE	TAPE HEMELON	KHS1A032
	22		00M05CW158010	00M05CW158010	WINDOW	WINDOW FIP	CGU1A359Y
	23		00M446T056010	00M446T056010	BUFFER	CUSHION DOOR	CHG1A296Y
	24	/N1B	00M05CW105020	00M05CW105020	CHASSIS	FRONT MOLD CHASSIS (BLACK)	CGW2A390R4K92
	24	/N1G	00M05CW105120	00M05CW105120	CHASSIS	FRONT MOLD CHASSIS (GOLD)	CGW2A390RFD4
	24	/N1S	00M05CW105220	00M05CW105220	CHASSIS	FRONT MOLD CHASSIS (SILVER)	CGW2A390R6G13
	24	/U1B	nsp	00M05CW105020	CHASSIS	FRONT MOLD CHASSIS (BLACK)	CGW2A390R4K92
	25	/N1B	00M27AW270040	00M27AW270040	BUTTON	POWER SW BUTTON (BLACK)	CBC1A146K92
	25	/N1G	00M27AW270140	00M27AW270140	BUTTON	POWER SW BUTTON (GOLD)	CBC1A146RFD4
	25	/N1S	00M27AW270240	00M27AW270240	BUTTON	POWER SW BUTTON (SILVER)	CBC1A146R6G13
	26	/N1B	nsp	nsp	BRACKET	POWER SW BRACKET	CMD1A493
	26	/N1G	nsp	nsp	BRACKET	POWER SW BRACKET	CMD1A493
	26	/N1S	nsp	nsp	BRACKET	POWER SW BRACKET	CMD1A493
	27		00M391H130030	00M391H130030	DAMPER	DUMPER ASSY	KDG1A006Z
	28		nsp	nsp	PWB ASSY	PUSH S/W PWB ASSY	COP11869Z
	29		nsp	nsp	PWB ASSY	H/P PWB ASSY	CUP11869Z
	30		00M10BW355020	00M10BW355020	LENS	INDICATOR THX	CGL1A232

NOTE : "nsp" PART IS LISTED FOR REFERENCE ONLY, MARANTZ WILL NOT SUPPLY THESE PARTS.

P.W.B. NAME	POS. NO.	VERS. COLOR	PART NO. (FOR EUR)	PART NO. (MZ)	PART NAME	DESCRIPTION	
	32	/U1B	nsp	00M27AW270030	BUTTON	POWER SW BUTTON TACT (BLACK)	CBT1A877K92
	33	/N1B	nsp	nsp	PWB ASSY	SELECTOR ENCODER PWB ASSY	COP11869H
	33	/N1G	nsp	nsp	PWB ASSY	SELECTOR ENCODER PWB ASSY	COP11869H
	33	/N1S	nsp	nsp	PWB ASSY	SELECTOR ENCODER PWB ASSY	COP11869J
	33	/U1B	nsp	nsp	PWB ASSY	SELECTOR ENCODER PWB ASSY	COP11869I
	34	/N1B	nsp	nsp	PWB ASSY	FRONT PWB ASSY	COP11869H
	34	/N1G	nsp	nsp	PWB ASSY	FRONT PWB ASSY	COP11869H
	34	/N1S	nsp	nsp	PWB ASSY	FRONT PWB ASSY	COP11869J
	34	/U1B	nsp	nsp	PWB ASSY	FRONT PWB ASSY	COP11869I
	35		nsp	nsp	HEATSINK	HEATSINK	CMY1A263ZA
	36		nsp	nsp	BRACKET	BRACKET FOR POWER AMP PWB	CMD1A490
	37		nsp	nsp	PWB ASSY	REGULATOR PWB ASSY	COP11876B
	38		nsp	nsp	PWB ASSY	AMP PWB ASSY	COP11870H
	39		nsp	nsp	BRACKET	BRACKET PWB AG-D9320	CMD1A398
	40	/N1B	nsp	nsp	PWB ASSY	POWER PWB ASSY	COP11873H
	40	/N1G	nsp	nsp	PWB ASSY	POWER PWB ASSY	COP11873H
	40	/N1S	nsp	nsp	PWB ASSY	POWER PWB ASSY	COP11873H
	40	/U1B	nsp	nsp	PWB ASSY	POWER PWB ASSY	COP11873I
	41	/U1B	nsp	nsp	PWB ASSY	XM PWB ASSY	COP11877C
	42	/N1B	nsp	nsp	PWB ASSY	SBLR SPEAKER PWB ASSY	COP11874H
	42	/N1G	nsp	nsp	PWB ASSY	SBLR SPEAKER PWB ASSY	COP11874H
	42	/N1S	nsp	nsp	PWB ASSY	SBLR SPEAKER PWB ASSY	COP11874H
	42	/U1B	nsp	nsp	PWB ASSY	SBLR SPEAKER PWB ASSY	COP11874I
	43	/N1B	nsp	nsp	PWB ASSY	RS-232 PWB ASSY	COP11874H
	43	/N1G	nsp	nsp	PWB ASSY	RS-232 PWB ASSY	COP11874H
	43	/N1S	nsp	nsp	PWB ASSY	RS-232 PWB ASSY	COP11874H
	43	/U1B	nsp	nsp	PWB ASSY	RS-232 PWB ASSY	COP11874I
	45	/N1B	nsp	nsp	PWB ASSY	STANDBY PWB ASSY	COP11874H
	45	/N1G	nsp	nsp	PWB ASSY	STANDBY PWB ASSY	COP11874H
	45	/N1S	nsp	nsp	PWB ASSY	STANDBY PWB ASSY	COP11874H
	45	/U1B	nsp	nsp	PWB ASSY	STANDBY PWB ASSY	COP11874I
	46		nsp	nsp	CHASSIS	CHASSIS BOTTOM	CUA1A264CC
	47		nsp	nsp	HOLDER	HOLDER PWB	CHE170
	48		nsp	nsp	BRACKET	BRACKET MAIN TRANSF.	CMD1A581
	49		nsp	nsp	PWB ASSY	GUIDE PWB ASSY	
	50		nsp	nsp	PWB ASSY	INPUT PWB ASSY	COP11871H
	51		00M10BW109010	00M10BW109010	SHIELD	BRACKET SHIELD	CMC1A252Z
	⚠ 52	/N1B	90M-TS002960R	90M-TS002960R	TRANSF.	! TROIDAL POWER TRANSF. N	CLT5Z016ZE
	⚠ 52	/N1G	90M-TS002960R	90M-TS002960R	TRANSF.	! TROIDAL POWER TRANSF. N	CLT5Z016ZE
	⚠ 52	/N1S	90M-TS002960R	90M-TS002960R	TRANSF.	! TROIDAL POWER TRANSF. N	CLT5Z016ZE
	⚠ 52	/U1B	nsp	90M-TS002970R	TRANSF.	! TROIDAL POWER TRANSF. U	CLT5Z016ZU
	53		nsp	nsp	BRACKET	BRACKET MULTI PWB	CMD1A582
	54	/N1B	nsp	nsp	PWB ASSY	VIDEO PWB ASSY	COP11873H
	54	/N1G	nsp	nsp	PWB ASSY	VIDEO PWB ASSY	COP11873H
	54	/N1S	nsp	nsp	PWB ASSY	VIDEO PWB ASSY	COP11873H
	54	/U1B	nsp	nsp	PWB ASSY	VIDEO PWB ASSY	COP11873I
	55	/N1B	nsp	nsp	PWB ASSY	7.1CH PREOUT PWB ASSY	COP11874H
	55	/N1G	nsp	nsp	PWB ASSY	7.1CH PREOUT PWB ASSY	COP11874H
	55	/N1S	nsp	nsp	PWB ASSY	7.1CH PREOUT PWB ASSY	COP11874H
	55	/U1B	nsp	nsp	PWB ASSY	7.1CH PREOUT PWB ASSY	COP11874I
	56		nsp	nsp	PWB ASSY	HDMI PWB ASSY	COP11875H
	57	/N1B	nsp	nsp	PWB ASSY	DSP PWB ASSY	COP11872H
	57	/N1G	nsp	nsp	PWB ASSY	DSP PWB ASSY	COP11872H
	57	/N1S	nsp	nsp	PWB ASSY	DSP PWB ASSY	COP11872H
	57	/U1B	nsp	nsp	PWB ASSY	DSP PWB ASSY	COP11872I
	58		nsp	nsp	PWB ASSY	COMPONENT PWB ASSY	COP11894C
	59	/N1B	nsp	nsp	PWB ASSY	7.1CH INPUT PWB ASSY	COP11869H
	59	/N1G	nsp	nsp	PWB ASSY	7.1CH INPUT PWB ASSY	COP11869H
	59	/N1S	nsp	nsp	PWB ASSY	7.1CH INPUT PWB ASSY	COP11869J
	59	/U1B	nsp	nsp	PWB ASSY	7.1CH INPUT PWB ASSY	COP11869I
	60	/N1B	90M-AV000400R	90M-AV000400R	TUNER	TUNER MODULE (EUR)	CNVMB114MA18L
	60	/N1G	90M-AV000400R	90M-AV000400R	TUNER	TUNER MODULE (EUR)	CNVMB114MA18L
	60	/N1S	90M-AV000400R	90M-AV000400R	TUNER	TUNER MODULE (EUR)	CNVMB114MA18L
	60	/U1B	nsp	90M-AV000410R	TUNER	TUNER MODULE (USA)	CNVMB014MA08L
	61	/N1B	nsp	nsp	PANEL	REAR PANEL SR8001 N	CKF6A306Z
	61	/N1G	nsp	nsp	PANEL	REAR PANEL SR8001 N	CKF6A306Z
	61	/N1S	nsp	nsp	PANEL	REAR PANEL SR8001 N	CKF6A306Z

NOTE : "nsp" PART IS LISTED FOR REFERENCE ONLY, MARANTZ WILL NOT SUPPLY THESE PARTS.

P.W.B. NAME	POS. NO.	VERS. COLOR	PART NO. (FOR EUR)	PART NO. (MZ)	PART NAME	DESCRIPTION	
	61	/U1B	nsp	nsp	PANEL	REAR PANEL SR8001 U	CKF7A306Z
	JW14		90M-YU002390R	90M-YU002390R	FPC	21P 100MM FPC	CWC1B4A21A100B
	JW15		90M-YU002410R	90M-YU002410R	FPC	17P 100MM FPC	CWC1C4A17B100B
	JW16		90M-YU002400R	90M-YU002400R	FPC	21P 300MM FPC	CWC1B4A21A300A
	JW17		90M-YU002430R	90M-YU002430R	FPC	15P 100MM FPC	CWC3B4A15A100A
	JW18		90M-YU002450R	90M-YU002450R	FPC	25P 170MM FPC	CWC3B4A25A170B
	JW20	/U1B	nsp	90M-YU002460R	FPC	15P 150MM FPC	CWC3C4A15B150B
	JW21	/N1B	nsp	nsp	CORD	WIRE ASSY	CWB4F232500UU
	JW21	/N1G	nsp	nsp	CORD	WIRE ASSY	CWB4F232500UU
	JW21	/N1S	nsp	nsp	CORD	WIRE ASSY	CWB4F232500UU
	JW23		nsp	nsp	CORD	WIRE ASSY	CWZSR7001BN92A
	JW24		90M-YU002380R	90M-YU002380R	FPC	17P 80MM FPC	CWC1B4A17A080A
	JW25		90M-YU002420R	90M-YU002420R	FPC	11P 130MM FPC	CWC3B4A11A130A
	JW26		90M-YU002440R	90M-YU002440R	FPC	17P 170MM FPC	CWC3B4A17A170B
	JW27	/U1B	nsp	90M-YU001880R	FPC	15P 200MM FPC	CWC1C4A15B200B
	JW28	/N1B	90M-YU001890R	90M-YU001890R	FPC	17P 200MM FPC	CWC1C4A17B200B
	JW28	/N1G	90M-YU001890R	90M-YU001890R	FPC	17P 200MM FPC	CWC1C4A17B200B
	JW28	/N1S	90M-YU001890R	90M-YU001890R	FPC	17P 200MM FPC	CWC1C4A17B200B
	⚠ RC91		90M-YJ002690R	90M-YJ002690R	TERMINAL	! R-301(187-2P) 10A/250V	HJJ8A001Z
			90M-FC500120R	90M-FC500120R	FERRITE CORE	FERRITE CORE	CLZ9Z070Z
			90M-FC500130R	90M-FC500130R	FERRITE CORE	FERRITE CORE	CLZ9Z071Z
			90M-FC500040R	90M-FC500040R	FERRITE CORE	FERRITE CORE(21.2X6.4X12.7) K5C T	CLZ9Z028Z
			90M-FC500030R	90M-FC500030R	FERRITE CORE	FERRITE RING 29X7.7X19	CLZ9W003Z
			nsp	nsp	CORD	WIRE ASSY	CWZSR7001BN92
PACKING							
		/N1B	00M06CW851310	00M06CW851310	USER GUIDE	USER GUIDE SR8001 N	CQX1A1093Z
		/N1G	00M06CW851310	00M06CW851310	USER GUIDE	USER GUIDE SR8001 N	CQX1A1093Z
		/N1S	00M06CW851310	00M06CW851310	USER GUIDE	USER GUIDE SR8001 N	CQX1A1093Z
		/U1B	nsp	00M06CW851250	USER GUIDE	USER GUIDE SR8001 U	CQX1A1094Z
			00MZK06CW0010	00MZK06CW0010	UNIT KIT	REMOTE CONTROLLER RC8001SR	CARTSR8001
	⚠ 62	/N1B	90M-ZC000320R	90M-ZC000320R	MAINS CORD	! MAINS CORD 2WIRE 10A/250V	CJA2B054Z
	⚠ 62	/N1G	90M-ZC000320R	90M-ZC000320R	MAINS CORD	! MAINS CORD 2WIRE 10A/250V	CJA2B054Z
	⚠ 62	/N1S	90M-ZC000320R	90M-ZC000320R	MAINS CORD	! MAINS CORD 2WIRE 10A/250V	CJA2B054Z
	⚠ 62	/U1B	nsp	90M-ZC000310R	MAINS CORD	! MAINS CORD UL 032508/12	CJA2A070Z
			00M05CW009010	00M05CW009010	MICROPHONE	MIC AUDYSSEY	CMICROSR8001
NOT STANDARD SPARE PART							
			nsp	00M06CW801010	PACKING CASE	PACKING CASE SR8001	CPG1A807W
		/N1B	nsp	00M06CW805010	MASS CARTON	SR8001 MASTER PKG	CPG1A808Y
		/N1G	nsp	00M06CW805010	MASS CARTON	SR8001 MASTER PKG	CPG1A808Y
		/N1S	nsp	00M06CW805010	MASS CARTON	SR8001 MASTER PKG	CPG1A808Y
			nsp	00M05CW809010	CUSHION	PAD SNOW L	CPS1A744
			nsp	00M05CW809020	CUSHION	PAD SNOW R	CPS1A745
	31	/N1B	nsp	00M05CW257010	LID	TOP COVER (BLACK)	CKC1A170K117
	31	/N1G	nsp	00M05CW257110	LID	TOP COVER (GOLD)	CKC1A170K118
	31	/N1S	nsp	00M05CW257210	LID	TOP COVER (SILVER)	CKC1A170G14
	31	/U1B	nsp	00M05CW257010	LID	TOP COVER (BLACK)	CKC1A170K117
			nsp	00M10BW067010	CAP	COVER FOR FRONT JACK	CGR1A344
			nsp	90M-ZA000240R	ANTENNA	AM LOOP ANT	CSA1A020Z
			nsp	90M-ZA000210R	ANTENNA	ANT FM WIRE (PIGTAIL)	CSA1A007

NOTE : "nsp" PART IS LISTED FOR REFERENCE ONLY, MARANTZ WILL NOT SUPPLY THESE PARTS.

Personal notes:

12. MICROPROCESSOR AND IC DATA

IC11 : HD64F2505

pin No	Port Name Mode7	I/O	use	STBY	Name	Port Setting		Note
						Act.	init	
1	PE5	I/O	O	I	RS232C_SW			RS232C Switch (Main CPU or HDMI CPU)
2	PE6	I/O	O	I	AFDATA	-	L	Analog Switch Data (TC94A46FG/TC9274N)
3	PE7	I/O	O	I	AFCLK	-	L	Analog Switch Clock (TC94A46FG/ TC9274N)
4	PD0	I/O	O	I	CE_TCA	H	L	Analog Switch (TC94A46FG/TC9274N)
5	PD1	I/O	O	I	_RSTDAC	L	L	Reset for DAC (CS4382)
6	PD2	I/O	O	I	_CS_DAC	L	H	DAC CHIP SELECTION (CS4382)
7	PD3	I/O	O	I	SWMUTE	H	H	SUB W SPK MUTE
8	PD4	I/O	O	I	CNTMUTE	H	H	CENTER SPK MUTE
9	PD5	I/O	O	I	SBMUTE	H	H	SRR B SPK MUTE
10	PD6	I/O	O	I	SL/SRMUTE	H	H	SL/SR SPK MUTE
11	PD7	I/O	O	I	L/RMUTE	H	H	FRONT L/R SPK MUTE
12	Vss	I	-	I	VSS	-	-	GND
13	PC0	I/O	O	I	KILLFLASH	H	L	Kill Flasher OUT
14	P1Vcc	I	YES	I	VCC	-	-	+5V'
15	PC1	I/O	O	I	S2P_DATA	-	L	4094 Data (74HC4094 x2pcs/CS4382)
16	PC2	I/O	O	I	S2P_CLK	-	L	4094 Clock (74HC4094 x2pcs/CS4382)
17	PC3	I/O	O	I	S2P_STB	-	H	4094 Strobe (74HC4094 x2pcs)
18	PC4	I/O	O	I	S2P__ENABLE	-	L	4094 Output Enable (Disable 4094 before strobe.) (74HC4094 x2pcs)
19	PC5	I/O	O	I	MULTIMUTEA	H	H	MULTI ROOM A MUTE
20	PC6	I/O	O	I	MULTIMUTEB	H	H	MULTI ROOM B MUTE
21	PC7	I/O	O	O	KILLIR	H	L	Kill to IR Input Signal
22	PB0	I/O	O	I	VOL_DATA	-	L	Ele Volume IC Data (TC9482)
23	PB1	I/O	O	I	VOL_CLK	-	L	Ele Volume IC Clock (TC9482)
24	PB2	I/O	I	I	_TU_SD	L	H	Tuner Tuned (Tuner Pack)
25	PB3	I/O	I	I	TU_ST	H		Tuner Stereo/_MONO (Tuner Pack)
26	PB4	I/O	O	I	TU_MUTE	H	H	Tuner MUTE (Tuner Pack)
27	PB5	I/O	O	I	_CE_TU	L	L	Tuner PLL CE (Tuner Pack)
28	PB6	I/O	O	I	_HDMI_LED	L	H	HDMI LED On
29	PB7	I/O	I	I	_P_AMP_FAIL	L	-	Power Amp Dectect (Open Collector)
30	PA0	I/O	O	I	TUDOUT	-	L	Tuner PLL Data Out (Tuner Pack)
31	PA1	I/O	O	I	TUCLK	-	L	Tuner PLL Clock (Tuner Pack)
32	PA2	I/O	I	I	TUDIN	-	L	Tuner PLL Data In (Tuner Pack)
33	PA3	I/O	I	I	RDS_DIN	-	L	Tuner RDS Data In (Tuner Pack)
34	PA4	I/O	O	I	_RSTFL	L	L	Front FL Driver Reset (NJU3430)
35	PA5	I/O	O	I	_CEFL	L	L	Front FL Driver Chip Select (NJU3430)
36	PA6	I/O	O	I	VOL_STB	H	L	Ele Volume IC Strobe (TC9482)
37	PA7	I/O	O	I	CLK_SW_0	-	L	_DIR/HDMI Audio Clock Select, L:DIR, H: HDMI (74VHC157)
38	PH7	I/O	O	I	CLK_SW_1	-	L	_DIR/Option Audio Clock Select, L:DIR, H: Opt (74VHC157)
39	PH6	I/O	O	I	_PCM_DSD_SEL	-	L	PCM/DSD DAC Audio input Select, L:PCM, H:DSD (74VHC157)
40	PH5	I/O	O	I	ILLUMINATION_ON_OFF	L	H	FRONT ILLUMINATION ON/OFF
41	PH4	I/O	O	I	HEAT	H	L	Power Amp±B AC_L Select
42	PH3	I/O	I	I	_HEAT_DET	H	-	Power Amp Heatsink Temp Detect
43	PH2	I/O	O	I	_STANDBY	L	L	Standby Power
44	PH1	I/O	I	I	_HP_DET	L	H	HP Jack Detect
45	PH0	I/O	O	I	HP_ON	H	L	HEAD PHONE ON
46	PJ7	I/O	SO	O	OSDDATA	-	L	Front FL, Video (OSD), 4094 Data (NJM3430/LC74781/74HC4094 x3pcs)
47	PJ6	I/O	O	I	DC_OUT1	L	H	DC Triger 1
48	PJ5	I/O	SC	I	OSDCLK	-	L	Front FL, Video (OSD), 4094 Clock (NJM3430/LC74781/74HC4094 x3pcs)
49	PJ4	I/O	O	I	DC_OUT2	L	H	DC Triger 2

IC11 : HD64F2505

pin No	Port Name Mode7	I/O	use	STBY	Name	Port Setting		Note
						Act.	init	
50	PJ3	I/O	O	I	_CEDIR	L	L	DIR Chip Enable (LC89057W)
51	PJ2	I/O	O	I	_DIR_RST	L	L	DIR Reset (LC89057W)
52	PJ1	I/O	O	O	_STBY_LED	L	H	Standby LED On
53	PJ0	I/O	O	I	_RSFL	L	L	Front FL Driver Register Selection (NJU3430)
54	Vss	I	-	I	VSS	-	-	GND
55	P97/AN15/ DA1	I,I,O	I	I	MIC_DETECT	L	H	MIC Jack Detection for MRAC
56	P96/AN14/ DA0	I,I,O	I	I	SPKC_SW	L	-	Speaker C Switch (Slide SW)
57	P95/AN13	I,I	I	I	DEC_INT	-	-	VIDEO DEC Interrupt (ADV7401)
58	P94/AN12	I,I	I	I	SEL-	L	H	Front Select Knob Encoder -
59	P93/AN11	I,I	I	I	SEL+	L	H	Front Select Knob Encoder +
60	P92/AN10	I,I	I	I	VOL-	L	H	Front Vol. Knob Encoder -
61	P91/AN9	I,I	I	I	VOL+	L	H	Front Vol. Knob Encoder +
62	P90/AN8	I,I	I	I	_OVFL	-	-	ADC Overflow for Peak Indicator (CS5361)
63	P47/AN7	I,I	I	I	TV_AUTO	-	-	TV Video Detect
64	P46/AN6	I,I	AD	AD	MODE2	-	-	CPU mode 2
65	P45/AN5	I,I	AD	AD	MODE1	-	-	CPU mode 1
66	P44/AN4	I,I	AD	AD	P_LINE_FAIL	-	-	Emergency Protection
67	AVss	I	-	I	AVSS	-	-	GND
68	P43/AN3	I,I	AD	AD	_5V_DOWN	-	-	Detect 5V
69	P42/AN2	I,I	AD	AD	KEY2	-	-	Front Button Key 2
70	P41/AN1	I,I	AD	AD	KEY1	-	-	Front Button Key 1
71	P40/AN0	I,I	AD	AD	KEY0	-	-	Front Button Key 0
72	Vref	I	YES	I	VCC	-	-	+5V'
73	AVcc	I	YES	I	AVCC	-	-	+5V'
74	P50/TxD2	I/O,O	O	I	DIR_OUT	-	-	Serial Data for DIR (LC89057W)
75	P51/RxD2	I/O,I	I	I	DIR_IN	-	-	Serial Data from DIR (LC89057W)
76	P52/SCK2	I/O,O	O	I	DIR_CLK	-	-	Serial Clock Out for DIR (LC89057W)
77	PF0/~IRQ2	I/O,I	INT	I	_P_DOWN	L	-	Power Down Detect
78	PF1/BUZZ	I/O,O	O	I	CP_SEL1			Component Video Input Select 1 (NJM2584) 1/3
79	PF2	I/O	O	I	CP_SEL2			Component Video Input Select 2 (NJM2584) 2/3
80	PF3/ ~ADTRG/ ~IRQ3	I/O,I,I	INT	I	RDS_CLK	-	-	Tuner RDS Clock (Tuner Pack)
81	PF4	I/O	O	I	CP_SEL3			Component Video Input Select 3 (NJM2584) 3/3
82	PF5	I/O	O	I	V_CONV_SEL			Component Video Monitor Select (NJM2586)
83	PF6	I/O	O	I	COMP_MUTE			Component Video Monitor Mute (NJM2586)
84	P1Vcc	I	YES	I	VCC	-	-	+5V'
85	PF7/	I/O,O	O	I	XPORT_SW			Switch of RS232C or X_PORT
86	Vss	I	-	I	VSS	-	-	GND
87	TEST	I	NO	I	TEST	-	-	GND
88	VCL	I	-	I	VCL	-	-	GND (0.47uF)
89	OSC2	I	NO	I	NC	-	-	OPEN
90	OSC1	I	NO	I	VSS	-	-	GND
91	NMI	I	NO	I	NMI	H	H	Fix : H
92	MD2	I	YES	I	MD2	H	H	Operation : H, Boot : L
93	XTAL	I	YES	I	XTAL	-	-	X'tal (20MHz)
94	Vss	I	NO	I	VSS	-	-	GND
95	EXTAL	I	YES	I	EXTAL	-	-	X'tal (20MHz)
96	Vcc	I	YES	I	VCC	-	-	+5V'
97	MD0	I	YES	I	MD0	H	H	Fix H
98	MD1	I	YES	I	MD1	H	H	Fix H
99	~STBY	I	NO	I	_STBY	L	H	Fix H

IC11 : HD64F2505

pin No	Port Name Mode7	I/O	use	STBY	Name	Port Setting		Note
						Act.	init	
100	~RES	I	YES	I	_RES	L	H	RESET
101	P20/TIOCA3	I/O,O	O	I	CPU_NMI			HDMI CPU WRITE MODE (H8/36087)
102	P21/TIOCB3	I/O,I/O	T_IN	I	IR_RECEIVER_IN	-	-	RFC
103	P22/TIOCC3	I/O,I/O	I	I	SPIO_ENA	L	H	Communication Enable from TI DSP (DA708)
104	P23/TIOCD3	I/O,I/O	O	I	_TI_RST	L	H	Reset for TI DSP (DA708)
105	P24/TIOCA4	I/O,I/O	O	I	_SPIO_SCS	L	H	Chip Select for TI DSP (DA708)
106	P25/TIOCB4	I/O,I/O	I	I	XSTATE	L	H	DIR CKST (LC89057W)
107	P26/TIOCA5	I/O,I/O	T_OUT	I	M_RC_OUT	-	L	RC BUS MULT OUT
108	P27/TIOCB5	I/O,I/O	T_IN	O	M_RC_IN	L	H	Multi RC5 In Detect Signal
109	P17/TIOCB2/ TCLKD	I/O,I/O,I/O	O	I	N.C	-	L	OPEN
110	P16/TIOCA2/ ~IRQ1	I/O,I/O,I	INT	INT	WAKEUP	↑	-	Standby Mode Release
111	P15/TIOCB1/ TCLKC	I/O,I/O,I/O	T_IN	I	VSYNC	↑	-	V-sync Det. & Change OSD (LC74781)
112	P14/TIOCA1/ ~IRQ0	I/O,I/O,I	INT	I	RERR	H	-	DIR Error (LC89057W)
113	P13/ TIOCD0/ TCLKB	I/O,I/O,I/O	T_OUT	O	RC_OUT	-	L	RC BUS OUT
114	P12/ TIOCC0/ TCLKA	I/O,I/O,I/O	O	I/O	V_SDA	-	H	I2C Data for VIDEO DEC/ENC (ADV7401/ ADV7320/CD0040AF)
115	P11/TIOCB0	I/O,I/O	O	O	V_SCL	-	H	I2C Clock for VIDEO DEC/ENC (ADV7401/ ADV7320/CD0040AF)
116	P10/TIOCA0	I/O,I/O	T_IN	I	RC_IN	↑↓	-	IR In for RC-5
117	Vss	I	YES	I	VSS	-	-	GND
118	P2Vcc	I	YES	I	VCC	-	-	+3.3V'
119	P37/TxD4	I/O,O	SO	O	XM_RXD	-	H	UART for XM Module
120	P36/RxD4	I/O,I	SI	I	XM_TXD	-	H	UART for XM Module
121	P35/SCK1/ SCK4/SCL0/ ~IRQ5	I/O,I/O,I/O,I/O,I	SC	I	CPU SCL	-	H	HDMI CPU I/F (H8/36087)
122	P34/RxD1/ SDA0	I/O,I,I/O	SIO	I	CPU SDA	-	H	HDMI CPU I/F (H8/36087)
123	P33/TxD1/ SCL1	I/O,O,I/O	O	I	CPU_RST	L	H	HDMI CPU Reset (H8/36087)
124	P32/SCK0/ SDA1/~IRQ4	I/O,I/O,I/O,I	INT	I	HDMI_MUTE	-	L	HDMI MUTE (Sil9033)
125	P31/RxD0	I/O,I	SI	I	RXD	-	H	UART for RS232C
126	P30/TxD0	I/O,O	SC	I	TXD	-	H	UART for RS232C
127	P77/TxD3	I/O,O	SO	I	SPIO_SIMO	-	H	Serilal Data Out for TI DSP (DA708)
128	P76/RxD3	I/O,I	SI	I	SPIO_SOMI	-	L	Serial Data In from TI DSP (DA708)
129	P75/TMO3/ SCK3	I/O,I/O,I/O	SC	I	SPIO_CLK	-	L	Serial Clock Out for TI DSP (DA708)
130	P74/TMO2/ ~MRES	I/O,O	O	O	IICCLK	-	L	I2C Clock for E2PROM (AT24C128)
131	P73/TMO1	I/O,O	I/O	I/O	IICDATA	-	L	I2C Data for E2PROM (AT24C128)
132	P72/TMO0	I/O,O	O	I	XM_CMD	H	L	DTIC mode select (XM Module)
133	P71/TMRI23/ TMCI23	I/O,O,O	O	I	XM_RST	L	L	Reset for XM DTIC (XM Module)
134	P70/TMRI01/ TMCI01	I/O,O,O	O	I	_XM_DAC_RST	L	L	DAC Reset for XM_Module (CS4392)
135	PG4	I/O	O	I	XM_MUTE	H	H	Mute On for XM Module
136	PG3	I/O	O	I	N.C	-	L	OPEN
137	PG2	I/O	O	O	N.C	-	L	OPEN
138	PG1/~IRQ7	I/O,I	INT	I	_AMUTE0	L	H	MUTE Contorol from TI DSP (DA708)
139	PG0/~IRQ6	I/O,I	INT	I	XM_IRQ	L	H	XM error detect (XM Module)
140	PE0	I/O	O		XM_ON	H	L	Control Power to XM/DT Bus (XM Module)
141	PE1	I/O	O	I	_CEEX	L	H	Serial to Parallel Expander for Video Strobe (74HC4094 x3pcs)
142	PE2	I/O	O	I	Y_OSD	H	L	Y/C_OSD_IC_BYPASS (NJM2595)
143	PE3	I/O	O	I	CVBS_OSD	H	L	CVBS_OSD_IC_BYPASS (NJM2595)
144	PE4	I/O	O	I	_CEOSD	L	H	Video Circuit (LC74781)

IC90 : HD64F36087HV

pin No	Port Name Mode7	I/O	use	STBY	Name	Port Setting		Note
						Act.	init	
1	PB6/AN6	I	I	I	SW6	-	-	to GND (or Temporary Pull up)
2	PB7/AN7	I	I	I	SW7	-	-	to GND (or Temporary Pull up)
3	Avcc	I	-	-				
4	X2	O	-	-				
5	X1	I	-	-				
6	Vcc	I	Vcc	-				
7	_RESET	I	_RES	-	_RST_HDMI			also use for JTAG
8	TEST	I	TEST	-				
9	Vss	I	Vss	-				
10	OSC2	O	OSC2	-	16MHz			
11	OSC1	I	OSC1	-	16MHz			
12	Vcc	I						
13	P50/_WKP0	I/O	O	I	_RST_TX1	L	H	HDMI Tx device1 Reset
14	P51/_WKP1	I/O	O	I	_RST_TX2	L	H	HDMI Tx device2 Reset
15	P34	I/O	O	I	DEBUG_O4	-	L	to Virtual Connector Land
16	P35	I/O	O	I	DEBUG_O5	-	L	to Virtual Connector Land
17	P36	I/O	O	I	DEBUG_O6	-	L	to Virtual Connector Land
18	P37	I/O	O	I	SW_VIDEO2	L	H	Select I/P Converter
19	P52/_WKP2	I/O	O	I	WP_4	L	L	Write Protect E2PROM4
20	P53/_WKP3	I/O	O	I	WP_3	L	L	Write Protect E2PROM3
21	P54/_WKP4	I/O	O	I	WP_2	L	L	Write Protect E2PROM2
22	P55/_WKP5	I/O	O	I	WP_1	L	L	Write Protect E2PROM1
23	P10/TMOW	I/O	O	I	CE_CXB2	H	L	CXB1441R 2 Chip Enable
24	P11/PWM	I/O	O	I	CE_CXB1	H	L	CXB1441R 1 Chip Enable
25	P12	I/O	O	I	SW_I2S_DSD			Switch I2S(L) or DSD(H)
26	P56/SDA	I/O	SDA	I	CPU_SDA			Commnunication to Main CPU
27	P57/SCL	I/O	SCL	I	CPU_SCL			Commnunication to Main CPU
28	P74/TMRIV	I/O	O	I	SEL_CH34	-	L	Select Input Ch. 3(L) or 4(H)
29	P75/TMCIV	I/O	O	I	SEL_CH12	-	L	Select Input Ch. 1(L) or 2(H)
30	P76/TMOV	I/O	O	I	SW_SPDIF			Sel. SPDIF Inp Rx(L) or DSP(H)
31	P24	I/O	O	I	_RST_RX	L	H	HDMI Rx device Reset
32	P63/FTIOD0	I/O	FTIOD	I	CEC_OUT	L	H	CEC Output
33	P62/FTIOC0	I/O	FTIOC	I	CEC_IN	L	-	CEC input
34	P61/FTIOB0	I/O	O	I	SW_5V2			+5V output to SINK2
35	_MNI	I	MNI		_MNI_HDMI			also use for JTAG
36	P60/FTIOA0	I/O	O	I	SW_5V1			+5V output to SINK1
37	P64/FTIOA1	I/O	O	I	HP_4			HPD switch for Input 4
38	P65/FTIOB1	I/O	O	I	HP_3			HPD switch for Input 3
39	P66/FTIOC1	I/O	O	I	HP_2			HPD switch for Input 2
40	P67/FTIOD1	I/O	O	I	HP_1			HPD switch for Input 1
41	P85	I/O			JTAG			use for JTAG (Pull up)
42	P86	I/O			JTAG			use for JTAG
43	P87	I/O			JTAG			use for JTAG
44	P20/SCK3	I/O	O	I	SW_VIDEO1	L	H	Select Video Decoder
45	P21/RXD	I/O	RXD	I	AUX_RxD			RS232C RxD for Host I/F
46	P22/TXD	I/O	TXD	I	AUX_TxD			RS232C TxD for Host I/F
47	P23	I/O	I/O	I	HDMI_SDA			I2C Line for HDMI Control
48	P70/SCK3_2	I/O	O	I	HDMI_SCL			I2C Line for HDMI Control

IC90 : HD64F36087HV

pin No	Port Name Mode7	I/O	use	STBY	Name	Port Setting		Note
						Act.	init	
49	P71/RXD_2	I/O	RXD	I	DEBUG_RxD			RS232C RxD for Debug
50	P72/TXD_2	I/O	TXD	I	DEBUG_TxD			RS232C TxD for Debug
51	P14/_IRQ0	I/O	INT	I	INT_RX	L	-	HDMI Rx device Int.
52	P15/_IRQ1	I/O	INT	I	INT_TX1	L	-	HDMI Tx device1 Int.
	/TMIB1							
53	P16/_IRQ2	I/O	INT	I	INT_TX2	L	-	HDMI Tx device2 Int.
54	P17/_IRQ3	I/O	INT	I	INT_SCDT	L	-	SCDT Int.
	/TRGV							
55	P33	I/O	O	I	DEBUG_O3	-	L	to Virtual Connector Land
56	P32	I/O	O	I	DEBUG_O2	-	L	to Virtual Connector Land
57	P31	I/O	O	I	DEBUG_O1	-	L	to Virtual Connector Land
58	P30	I/O	O	I	DEBUG_O0	-	L	to Virtual Connector Land
59	PB3/AN3	I	I	I	I_HPD_O1			HDP Input for Out1
60	PB2/AN2	I	I	I	I_HPD_O2			HDP Input for Out2
61	PB1/AN1	I	I	I	I_5V_CH34			5V Input for CH3,4
62	PB0/AN0	I	I	I	I_5V_CH12			5V Input for CH1,2
63	PB4/AN4	I	I	I	SW4			to GND (or Temporary Pull up)
64	PB5/AN5	I	I	I	SW5			to GND (or Temporary Pull up)

IC12 : TC7MZ4052FK
IC14 : TC7MZ4052FK
IC16 : TC7MZ4052FK
IC18 : TC7MZ4052FK
IC19 : TC74HC4052AFT
IC20 : TC7MZ4052FK
IC23 : TC7MZ4052FK

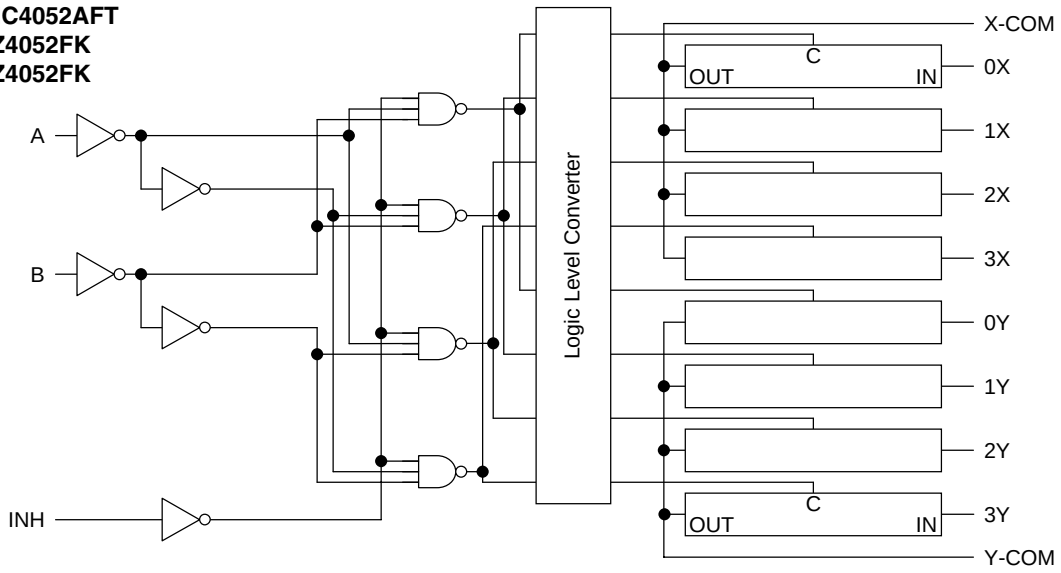

Control Inputs				"ON" Channel		
Inhibit	C*	B	A	MZ4051FK	MZ4052FK	MZ4053FK
L	L	L	L	0	0X, 0Y	0X, 0Y, 0Z
L	L	L	H	1	1X, 1Y	1X, 0Y, 0Z
L	L	H	L	2	2X, 2Y	0X, 1Y, 0Z
L	L	H	H	3	3X, 3Y	1X, 1Y, 0Z
L	H	L	L	4	—	0X, 0Y, 1Z
L	H	L	H	5	—	1X, 0Y, 1Z
L	H	H	L	6	—	0X, 1Y, 1Z
L	H	H	H	7	—	1X, 1Y, 1Z
H	X	X	X	None	None	None

X: Don't care, *: Except MZ4052FK

IC19 : CXB1441R
IC22 : CXB1441R

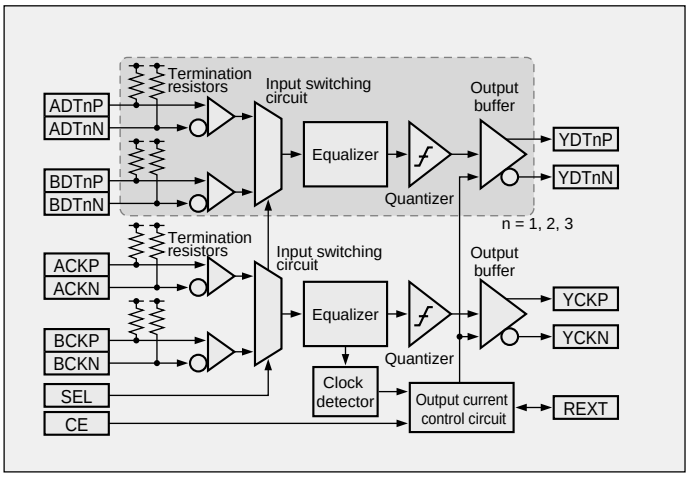

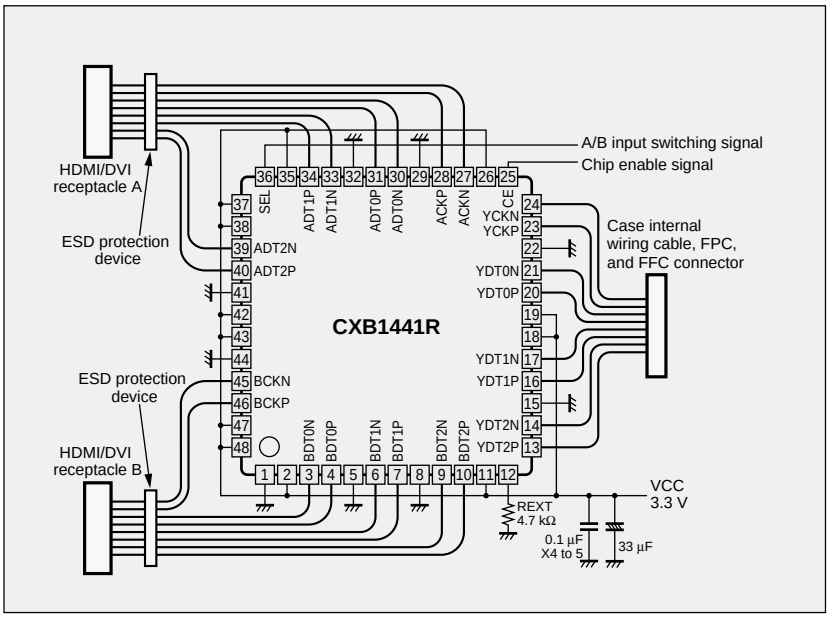

IC20 : TC74HC4094AFN
IC21 : TC74HC4094AFN
IC79 : TC74HC4094AFN
IC80 : TC74HC4094AFN
IC83 : TC74HC4094AFN

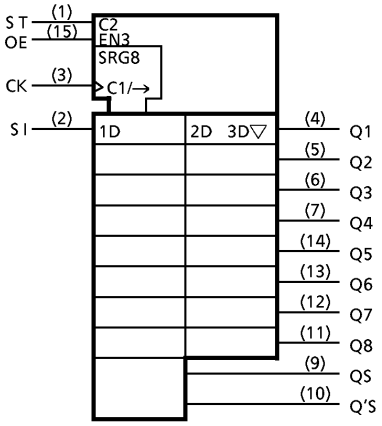

CK	OE	ST	SI	PARA. OUT		SERI. OUT	
				Q1	Qn	Qs	Q's
↑	H	H	L	L	Qn - 1	Q7	NC
↑	H	H	H	H	Qn - 1	Q7	NC
↑	H	L	*	NC	NC	Q7	NC
↑	L	*	*	Z	Z	Q7	NC
↓	H	*	*	NC	NC	NC	Qs
↓	L	*	*	Z	Z	NC	Qs

X : DON'T CARE
NC : NO CHANGE
Z : HIGH IMPEDANCE

IC20 : TC74HC4094AFN
IC21 : TC74HC4094AFN
IC79 : TC74HC4094AFN
IC80 : TC74HC4094AFN
IC83 : TC74HC4094AFN

IC20

Port Name	Use	STBY	Name	V	PortSetup		Note
				Device	Act.	Int	
Q1	O	I	MIC_ENABLE	3.3-5.0V	H	L	MIC Enable for MRAC (Relay)
Q2	O	I	SPKC_CONT	5.0V	H	L	Speaker C Relay Control (Relay)
Q3	O	I	_PUREDIRECT_LED	5.0V	L	H	PURE DIRECT LED On
Q4	O	I	SBA_ON	3.3-5.0V	H	L	Surr-Back SPK A SELECT
Q5	O	I	SBB_ON	3.3-5.0V	H	L	Surr-Back SPK B SELECT
Q6	O	I	FLRA_ON	3.3-5.0V	H	L	SPK A SELECT
Q7	O	I	FLRB_ON	3.3-5.0V	H	L	SPK B SELECT
Q8	O	I	SURR_ON	3.3-5.0V	H	L	SURR/CNT SPK ON

IC21

Port Name	Use	STBY	Name	V	PortSetup		Note
				Device	Act.	Int	
Q1	O	I	DIG_SEL_A	3.3V(-5.0V)	-	L	DIGITAL INPUT SEL-A FOR DIR (74HC151 or 74VHC153)
Q2	O	I	DIG_SEL_B	3.3V(-5.0V)	-	L	DIGITAL INPUT SEL-B FOR DIR (74HC151 or 74VHC153)
Q3	O	I	Multi_A Mono/Stereo	3.3-5.0V	H	L	Multi Room Out A Mono/Stereo SELECT Mono :H Stereo : L
Q4	O	I	Multi_B Mono/Stereo	3.3-5.0V	H	L	Multi Room Out B Mono/Stereo SELECT Mono :H Stereo : L
Q5	O	I	DFS	3.3V	H	L	ADC Mode Selection 0 (CS5361)
Q6	O	I	_ATT	5.0V	L	H	Analog Audio (Lt/Rt) Input ATT
Q7	O	I	_RSTADC	3.3V	L	H	ADC Reset (CS5361)
Q8	O	I	D_A	3.3-5.0V	-	L	DIR or _ADC sel (Error Unsel) (74VHC08 to ERMUTE)

IC80

Port Name	Use	STBY	Name	V	PortSetup		Note
				Device	Act.	Int	
Q1	O	I	MCP_MUTE	5.0V	H	-	Multi Component MUTE
Q2	O	I	SE_VIDEO03	5.0V	H	-	CVBS Input Select 3 (VCR/DVD/TV/AUX) (NJM2595)
Q3	O	I	SE_VIDEO02	5.0V	H	-	CVBS Input Select 2 (VCR/DVD/TV/AUX) (NJM2595)
Q4	O	I	SE_VIDEO01	5.0V	H	-	CVBS Input Select 1 (VCR/DVD/TV/AUX) (NJM2595)
Q5	O	I	OSD_CON05	5.0V	H	-	
Q6	O	I	SE_VIDEO06	5.0V	H	-	CVBS Multi Monitor Select (Through/OSD) (NJM2244)
Q7	O	I	SE_VIDEO05	5.0V	H	-	CVBS Multi Monitor Select (Through/OSD) (NJM2244)
Q8	O	I	SE_VIDEO04	5.0V	H	-	CVBS Input Select 4 (VCR/DVD/TV/AUX) (NJM2595)

IC79

Port Name	Use	STBY	Name	V	PortSetup		Note
				Device	Act.	Int	
Q1	O	I	OSD_CON01	5.0V	H	-	CVBS & Y/C Monitor Select (Through/Converted) (NJM2244)
Q2	O	I	OSD_CON02	5.0V	H	-	OSD Sync Input Select (MJM2535/NJM2285)
Q3	O	I	OSD_CON03	5.0V	H	-	VIDEO DEC Input Select (MJM2285)
Q4	O	I	MCP_SEL4	5.0V	H	-	Multi Component SEL4
Q5	O	I	SEL_V02	5.0V	H	-	CVBS & Y/C Input Select 2 (VCR/DVD/TV/AUX) (NJM2595)
Q6	O	I	SEL_V01	5.0V	H	-	CVBS & Y/C Input Select 1 (VCR/DVD/TV/AUX) (NJM2595)
Q7	O	I	SEL_V03	5.0V	H	-	CVBS & Y/C Input Select 3 (VCR/DVD/TV/AUX) (NJM2595)
Q8	O	I	SEL_V04	5.0V	H	-	CVBS & Y/C Input Select 4 (VCR/DVD/TV/AUX) (NJM2595)

IC83

Port Name	Use	STBY	Name	V	PortSetup		Note
				Device	Act.	Int	
Q1	O	I	MCP_SEL1	5.0V	H	-	Multi Component SEL1
Q2	O	I	Y/C_SEL	5.0V	H	-	Y/C Monitor Select (Through/Converted) (NJM2244)
Q3	O	I	CVBS_SEL	5.0V	H	-	CVBS Monitor Select (Through/Converted) (NJM2244)
Q4	O	I	OSD_SEL	5.0V	H	-	SYNC SCAN Select
Q5	O	I	RST_DEC	5.0V	H	H	VIDEO DEC Reset
Q6	O	I	RST_ENC	5.0V	H	H	VIDEO ENC Reset
Q7	O	I	MCP_SEL2	5.0V	H	-	Multi Component SEL2
Q8	O	I	MCP_SEL3	5.0V	H	-	Multi Component SEL3

IC21 : TC94A46CFG

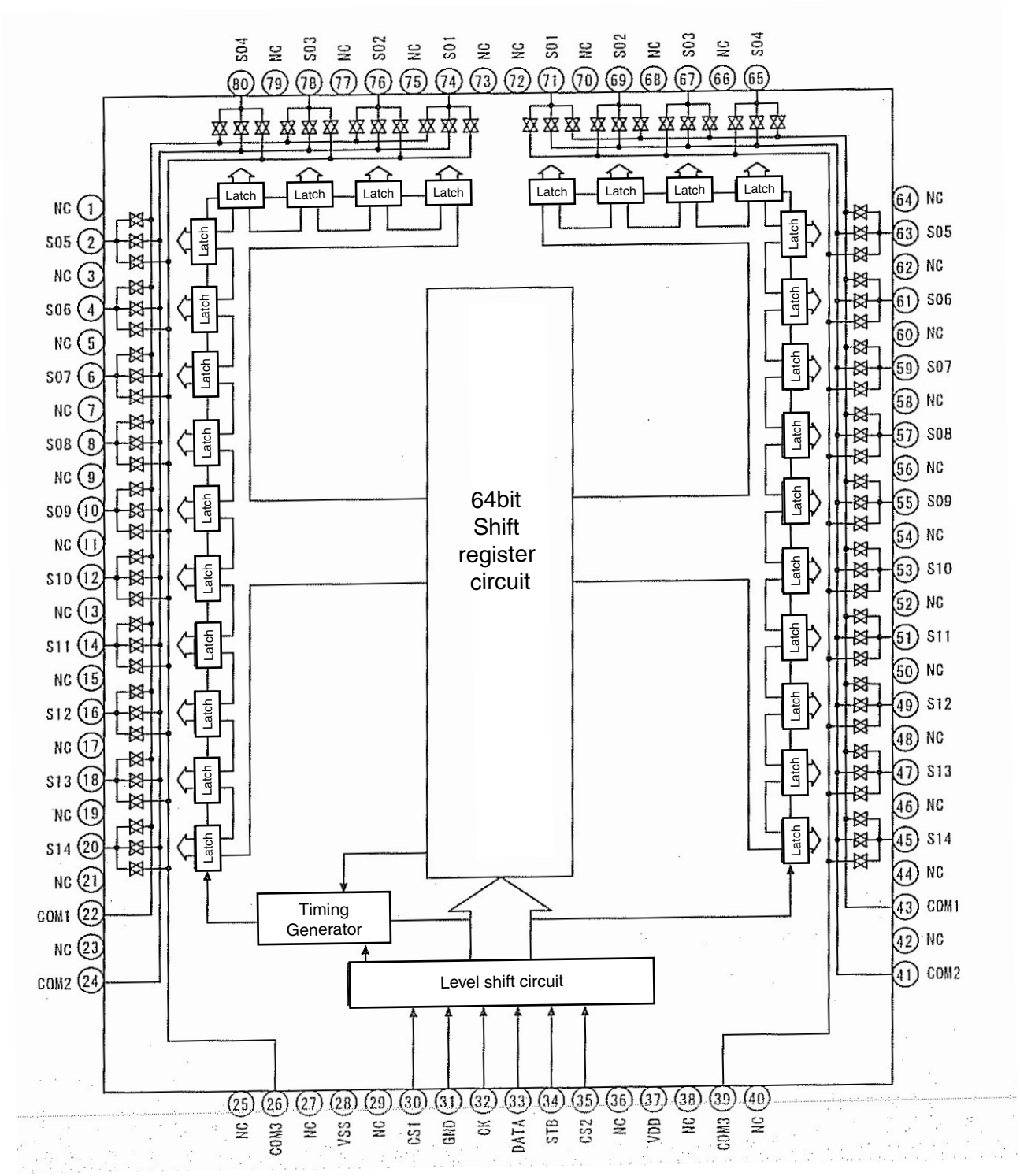

IC22 : TC9274CNG

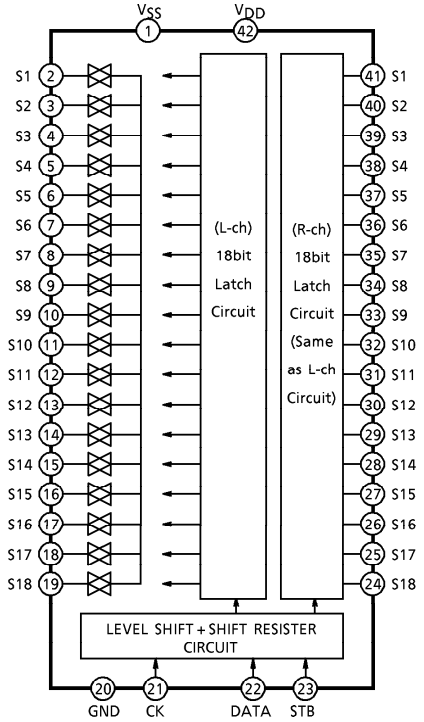

IC27 : CS5361-KS

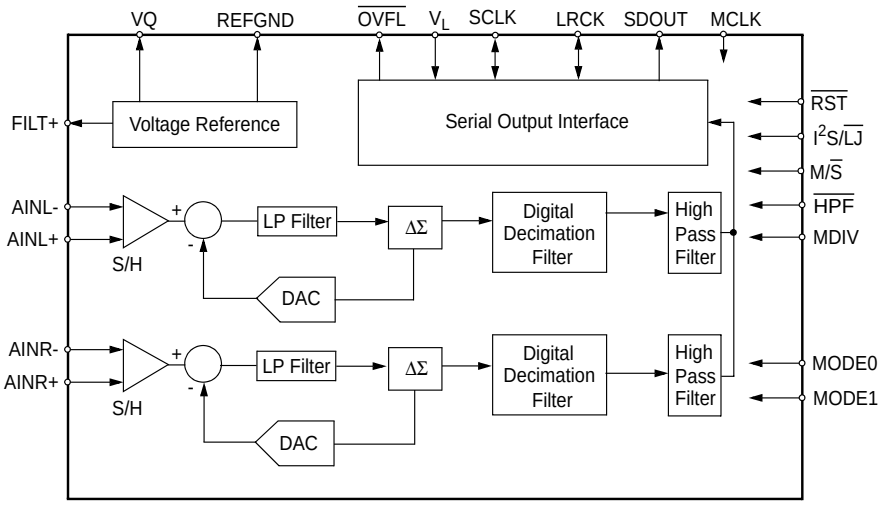

IC27 : CS5361-KS

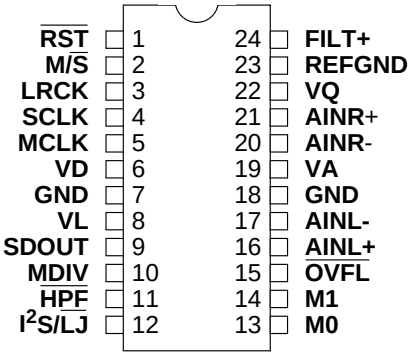

Pin Name	#	Pin Description
RST	1	**Reset** (*Input*) - The device enters a low power mode when low.
M/S	2	**Master/Slave Mode** *(Input)* - Selects operation as either clock master or slave.
LRCK	3	**Left Right Clock** (*Input*/*Output*) - Determines which channel, Left or Right, is currently active on the serial audio data line.
SCLK	4	**Serial Clock** (*Input*/*Output*) - Serial clock for the serial audio interface.
MCLK	5	**Master Clock** (*Input*) - Clock source for the delta-sigma modulator and digital filters.
VD	6	**Digital Power** (*Input*) **-** Positive power supply for the digital section.
GND	7,18	**Ground** (*Input*) - Ground reference. Must be connected to analog ground.
VL	8	**Logic Power** (*Input*) **-** Positive power for the digital input/output.
SDOUT	9	**Serial Audio Data Output** (*Output*) - Output for two's complement serial audio data.
MDIV	10	**MCLK Divider** *(Input*) **-** Enables a master clock divide by two function.
HPF	11	**High-pass Filter Enable** *(Input*) **-** Enables the Digital High-Pass Filter.
I^2S/LJ	12	**Serial Audio Interface Format Select** (*Input*) -Selects either the left-justified or I^2S format for the SAI.
M0 **M1**	13, 14	**Mode Selection** (*Input*) - Determines the operational mode of the device.
OVFL	15	**Overflow** *(Output, open drain)* **-** Detects an overflow condition on both left and right channels.
AINL+ **AINL-**	16, 17	**Differential Left Channel Analog Input** (*Input*) - Signals are presented differentially to the delta-sigma modulators via the AINL+/- pins.
VA	19	**Analog Power** (*Input*) **-** Positive power supply for the analog section.
AINR- **AINR+**	20, 21	**Differential Right Channel Analog Input** (*Input*) -Signals are presented differentially to the delta-sigma modulators via the AINR+/- pins.
VQ	22	**Quiescent Voltage** *(Output)* **-** Filter connection for the internal quiescent reference voltage.
REF_GND	23	**Reference Ground** (*Input*) - Ground reference for the internal sampling circuits.
FILT+	24	**Positive Voltage Reference** (*Output*) **-** Positive reference voltage for the internal sampling circuits.

IC29 : LC89057WVF4E

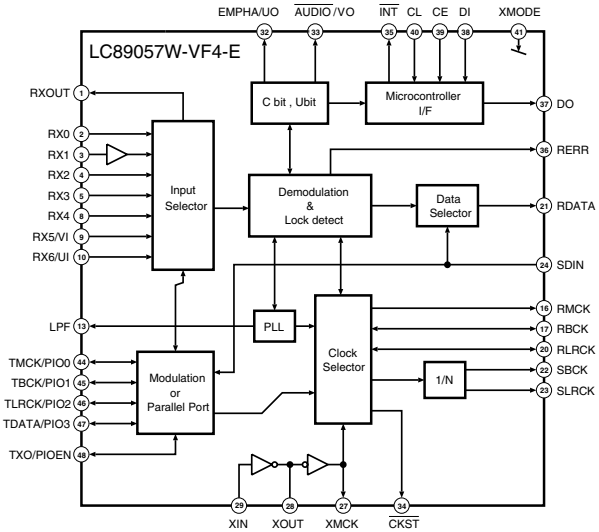

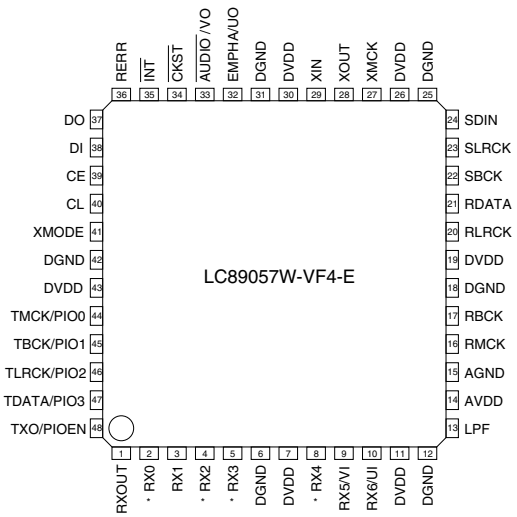

LC89057W

No.	Port name	I/O	Description
1	RXOUT	O	Data Output
2	RX0	I	Digital data Input (TTL)
3	RX1	I	Digital data Input (Coaxial)
4	RX2	I	Digital data Input (TTL)
5	RX3	I	Digital data Input (TTL)
6	DGND		Digital GND
7	DVDD		Digital VDD
8	RX4	I	Digital data Input (TTL)
9	RX5/VI	I	Digital data Input (TTL)
10	RX6/UI	I	Digital data Input (TTL)
11	DVDD		Digital GND for PLL
12	DGND		Digital VDD for PLL
13	LPF	O	Loop filter for PLL
14	AVDD		Analog VDD for PLL
15	AGND		Analog GND for PLL
16	RMCK	O	System clock Output for R (256fs, 512fs, XIN, VCO)
17	RBCK	O/I	Bit clock Output for R (64fs)
18	DGND		Digital GND
19	DVDD		Digital VDD
20	RLRCK	O/I	LR clock Input/Output for R
21	RDATA	O	Serial Audio data Input
22	SBCK	O	Bit clock Output for S (32fs, 64fs, 128fs)
23	SLRCK	O	LR clock Output for S (fs/2, fs, 2fs)
24	SDIN	I	Serial Audio data Input
25	DGND		Digital GND
26	DVDD		Digital VDD
27	XMCK	O	Oscillation amplifier
28	XOUT	O	XOUT
29	XIN	I	XIN or External clock Input (24.576MHz or 12.288MHz)
30	DVDD		Digital VDD
31	DGND		Digital GND
32	EMPHA/UO	I/O	Emphasis Information / U data Output / Set for chip address
33	AUDIO/VO	I/O	Detected non-PCM / V flag Output / Set for chip address
34	CKST	I/O	Clock timing Output / Switch to master or slave for demodulation
35	INT	I/O	Interrupt Output / Switch to Modulation or general-purpose I/O
36	RERR	O	Error Output (PLL lock, data error)
37	DO	O	IF, Read out data Output
38	DI	I	IF, Write data Input
39	CE	I	IF, Chip enable Input
40	CL	I	IF, Clock Input
41	XMODE	I	System reset Input
42	DGND		Digital GND
43	DVDD		Digital VDD
44	TMCK/PIO0	I/O	256fs system-clock Input for modulation / General-purpose I/O input/output
45	TBCK/PIO1	I/O	64fs bit-clock Input for modulation / General-purpose I/O input/output
46	TLRCK/PIO2	I/O	Fs clock Input for modulation / General-purpose I/O input/output
47	TDATA/PIO3	I/O	Serial audio data for modulation / General-purpose I/O input/output
48	TXO/PIOEN	O/I	Modulation data Output / General-purpose I/O enable input

IC32 : TC74VHC157FT

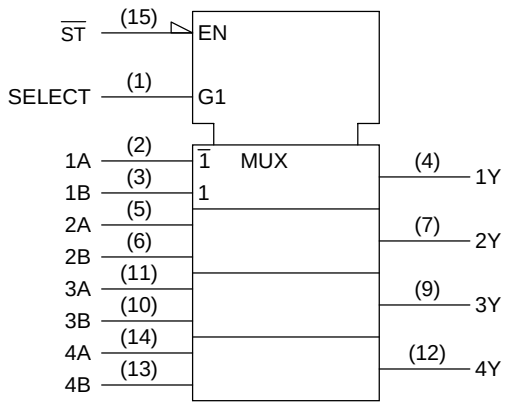

Inputs				Outputs
$\overline{ST}$	SELECT	A	B	Y
H	X	X	X	L
L	L	L	X	L
L	L	H	X	H
L	H	X	L	L
L	H	X	H	H

X: Don't care

IC33 : TMS320DA708

1 Second Generation Aureus™ DSP

1.1 Features

- **DA708: 32-/64-Bit 250-MHz Floating-Point DSP**
- **Upgrades to C67x+ CPU From DA6xx Family:**
  - **2X CPU Registers [64 General-Purpose]**
  - **New Audio-Specific Instructions**
  - **Compatible With the DA6xx C67x CPU**
- **Enhanced Memory System**
  - **256K-Byte Unified Program/Data RAM**
  - **768K-Byte Unified Program/Data ROM**
  - **Single-Cycle Data Access From CPU**
  - **Large Program Cache (32K-Byte) Supports RAM, ROM, and External Memory**
- **External Memory Interface (EMIF) Supports:**
  - **100-MHz SDRAM (16-Bit)**
  - **Async Flash/SRAM (8- or 16-Bit)**
- **Enhanced I/O System**
  - **High-Performance Crossbar Switch**
  - **Dedicated McASP DMA Bus**
  - **Deterministic I/O Performance**
- **dMAX Dual Data Movement Accelerator:**
  - **Memory-to-Memory Transfers**
  - **Memory-to-Peripheral Transfers**
  - **Packing/Unpacking Delay Data**
  - **Circular Addressing**
  - **Non-Sequential Addressing for Reverb**
- **Three Multichannel Audio Serial Ports**
  - **Five Clock Zones and 16 Serial Data Pins**
  - **Supports TDM, I2S, and Similar Formats**
  - **DIT Only (McASP2)**
- **Two SPI Ports With 3-, 4-, and 5-Pin Options**
- **Two Inter-Integrated Circuit (I2C) Ports**
- **Real-Time Interrupt Counter/Watchdog**
- **Oscillator- and Software-Controlled PLL**
- **Commercial or Extended Temperature**
- **144-Pin, 0.5-mm, PowerPAD™ Thin Quad Flatpack (TQFP) [RFP Suffix]**
- **Security Features Available**

- **Applications**
  - **A/V and DVD Receiver**
  - **Multizone A/V Receiver**
  - **HDD Jukebox**
  - **Navigation Systems**
  - **High-Speed Encode With Simultaneous Multichannel Decode**
- **Software Support**
  - **Dolby® Digital, Dolby® Digital EX, Dolby® Pro Logic® IIx, Dolby® Headphone, Dolby® Virtual Surround**
  - **DTS® 5.1, DTS-ES™ 6.1, DTS Neo:6™, DTS 96/24™, DTS-ES 96/24™**
  - **MPEG-2 AAC LC Decode**
  - **THX® Select, THX® Ultra 2**
  - **MP3 Encode, MP3 Decode**
  - **WMA9 Encode, WMA9 Decode, WMA9 Pro Decode**
  - **HDCD® Decode**
  - **ATRAC3plus® Encode, ATRAC3plus® Decode**
  - **Audyssey MultEQ XT®, MultEQ®, PrevEQ®**
  - **SRS® Circle Surround™ II (CS II)**
  - **Waves' MaxxBass® Technology**
  - **TI Effects Library**
  - **TI DSD-to-PCM Decode**
  - **TI Filter Library**
  - **TI Performance Audio Framework (PA/F)**
  - **TI DSP/BIOS™**
  - **Chip Support Library and DSP Library**

Table 2-2. Terminal Functions

SIGNAL NAME	PIN NO.	TYPE(1)	PULL(2)	GPIO(3)	DESCRIPTION
External Memory Interface (EMIF) Address and Control					
EM_A[0]	91	O	-	N	EMIF Address Bus
EM_A[1]	89	O	-	N	
EM_A[2]	88	O	-	N	
EM_A[3]	86	O	-	N	
EM_A[4]	84	O	-	N	
EM_A[5]	83	O	-	N	
EM_A[6]	80	O	-	N	
EM_A[7]	79	O	-	N	
EM_A[8]	76	O	-	N	
EM_A[9]	75	O	-	N	
EM_A[10]	93	O	-	N	
EM_A[11]	74	O	-	N	
EM_BA[0]	96	O	-	N	SDRAM Bank Address and Asynchronous Memory Low-Order Address
EM_BA[1]	94	O	-	N	
$\overline{\text{EM\_CS[0]}}$	97	O	-	N	SDRAM Chip Select
$\overline{\text{EM\_CS[2]}}$	100	O	-	N	Asynchronous Memory Chip Select
$\overline{\text{EM\_CAS}}$	37	O	-	N	SDRAM Column Address Strobe
$\overline{\text{EM\_RAS}}$	98	O	-	N	SDRAM Row Address Strobe
$\overline{\text{EM\_WE}}$	38	O	-	N	SDRAM Write Enable
EM_CKE	71	O	-	N	SDRAM Clock Enable
EM_CLK	70	O	-	N	SDRAM Clock
EM_$\overline{\text{WE}}$_DQM[0]	39	O	-	N	Write Enable or Byte Enable for EM_D[7:0]
EM_$\overline{\text{WE}}$_DQM[1]	67	O	-	N	Write Enable or Byte Enable for EM_D[15:8]
$\overline{\text{EM\_OE}}$	104	O	-	N	SDRAM Output Enable
EM_R$\overline{\text{W}}$	102	O	-	N	Asynchronous Memory Read/not Write

(1) TYPE column refers to pin direction in functional mode. If a pin has more than one function with different directions, the functions are separated with a slash (/).
(2) PULL column:
IPD = Internal Pulldown resistor
IPU = Internal Pullup resistor
(3) If the GPIO column is 'Y', then in GPIO mode, the pin is configurable as an IO unless otherwise marked.

Table 2-2. Terminal Functions (continued)

SIGNAL NAME	PIN NO.	TYPE(1)	PULL(2)	GPIO(3)	DESCRIPTION
External Memory Interface (EMIF) Data Bus					
EM_D[0]	52	IO	-	N	EMIF Data Bus [Lower 16 Bits]
EM_D[1]	51	IO	-	N	
EM_D[2]	49	IO	-	N	
EM_D[3]	48	IO	-	N	
EM_D[4]	46	IO	-	N	
EM_D[5]	45	IO	-	N	
EM_D[6]	43	IO	-	N	
EM_D[7]	41	IO	-	N	
EM_D[8]	66	IO	-	N	
EM_D[9]	64	IO	-	N	
EM_D[10]	63	IO	-	N	
EM_D[11]	61	IO	-	N	
EM_D[12]	59	IO	-	N	
EM_D[13]	58	IO	-	N	
EM_D[14]	56	IO	-	N	
EM_D[15]	55	IO	-	N	

Table 2-2. Terminal Functions (continued)

SIGNAL NAME	PIN NO.	TYPE (1)	PULL (2)	GPIO (3)	DESCRIPTION
McASP0, McASP1, McASP2, and SPI1 Serial Ports					
AHCLKR0/AHCLKR1	143	IO	-	Y	McASP0 and McASP1 Receive Master Clock
ACLKR0	139	IO	-	Y	McASP0 Receive Bit Clock
AFSR0	141	IO	-	Y	McASP0 Receive Frame Sync (L/R Clock)
AHCLKX0/AHCLKX2	2	IO	-	Y	McASP0 and McASP2 Transmit Master Clock
ACLKX0	142	IO	-	Y	McASP0 Transmit Bit Clock
AFSX0	144	IO	-	Y	McASP0 Transmit Frame Sync (L/R Clock)
AMUTE0	3	O	-	Y	McASP0 MUTE Output
AXR0[0]	113	IO	-	Y	McASP0 Serial Data 0
AXR0[1]	115	IO	-	Y	McASP0 Serial Data 1
AXR0[2]	116	IO	-	Y	McASP0 Serial Data 2
AXR0[3]	117	IO	-	Y	McASP0 Serial Data 3
AXR0[4]	119	IO	-	Y	McASP0 Serial Data 4
AXR0[5]/$\overline{\text{SPI1\_SCS}}$	120	IO	-	Y	McASP0 Serial Data 5 ***or*** SPI1 Slave Chip Select
AXR0[6]/$\overline{\text{SPI1\_ENA}}$	121	IO	-	Y	McASP0 Serial Data 6 ***or*** SPI1 Enable (Ready)
AXR0[7]/SPI1_CLK	122	IO	-	Y	McASP0 Serial Data 7 ***or*** SPI1 Serial Clock
AXR0[8]/AXR1[5]/ SPI1_SOMI	126	IO	-	Y	McASP0 Serial Data 8 ***or*** McASP1 Serial Data 5 ***or*** SPI1 Data Pin Slave Out Master In
AXR0[9]/AXR1[4]/ SPI1_SIMO	127	IO	-	Y	McASP0 Serial Data 9 ***or*** McASP1 Serial Data 4 ***or*** SPI1 Data Pin Slave In Master Out
AXR0[10]/AXR1[3]	130	IO	-	Y	McASP0 Serial Data 10 ***or*** McASP1 Serial Data 3
AXR0[11]/AXR1[2]	131	IO	-	Y	McASP0 Serial Data 11 ***or*** McASP1 Serial Data 2
AXR0[12]/AXR1[1]	134	IO	-	Y	McASP0 Serial Data 12 ***or*** McASP1 Serial Data 1
AXR0[13]/AXR1[0]	135	IO	-	Y	McASP0 Serial Data 13 ***or*** McASP1 Serial Data 0
AXR0[14]/AXR2[1]	137	IO	-	Y	McASP0 Serial Data 14 ***or*** McASP2 Serial Data 1
AXR0[15]/AXR2[0]	138	IO	-	Y	McASP0 Serial Data 15 ***or*** McASP2 Serial Data 0
ACLKR1	9	IO	-	Y	McASP1 Receive Bit Clock
AFSR1	12	IO	-	Y	McASP1 Receive Frame Sync (L/R Clock)
AHCLKX1	5	IO	-	Y	McASP1 Transmit Master Clock
ACLKX1	7	IO	-	Y	McASP1 Transmit Bit Clock
AFSX1	11	IO	-	Y	McASP1 Transmit Frame Sync (L/R Clock)
AMUTE1	4	O	-	Y	McASP1 MUTE Output
SPI0, I2C0, and I2C1 Serial Port Pins					
SPI0_SOMI/I2C0_SDA	111	IO	-	Y	SPI0 Data Pin Slave Out Master In ***or*** I2C0 Serial Data
SPI0_SIMO	110	IO	-	Y	SPI0 Data Pin Slave In Master Out
SPI0_CLK/I2C0_SCL	108	IO	-	Y	SPI0 Serial Clock ***or*** I2C0 Serial Clock
$\overline{\text{SPI0\_SCS}}$/I2C1_SCL	107	IO	-	Y	SPI0 Slave Chip Select ***or*** I2C1 Serial Clock
$\overline{\text{SPI0\_ENA}}$/I2C1_SDA	105	IO	-	Y	SPI0 Enable (Ready) ***or*** I2C1 Serial Data

Table 2-2. Terminal Functions (continued)

SIGNAL NAME	PIN NO.	TYPE(1)	PULL(2)	GPIO(3)	DESCRIPTION
Clocks					
OSCIN	23	I	-	N	1.2-V Oscillator Input
OSCOUT	24	O	-	N	1.2-V Oscillator Output
$OSCV_{DD}$	25	PWR	-	N	Oscillator 1.2-V V_{DD} tap point (for filter only)
$OSCV_{SS}$	22	PWR	-	N	Oscillator V_{SS} tap point (for filter only)
CLKIN	17	I	-	N	Alternate clock input (3.3-V LVCMOS Input)
PLLHV	27	PWR	-	N	PLL 3.3-V Supply Input (requires external filter)
Device Reset					
$\overline{RESET}$	14	I	-	N	Device reset pin
Emulation/JTAG Port					
TCK	35	I	IPU	N	Test Clock
TMS	19	I	IPU	N	Test Mode Select
TDI	28	I	IPU	N	Test Data In
TDO	29	OZ	IPU	N	Test Data Out
$\overline{TRST}$	21	I	IPD	N	Test Reset
$\overline{EMU[0]}$	32	IO	IPU	N	Emulation Pin 0
$\overline{EMU[1]}$	34	IO	IPU	N	Emulation Pin 1
Power Pins					
Core Supply (CV_{DD})	8, 16, 20, 33, 44, 53, 57, 65, 77, 85, 90, 101, 123, 128, 132				
IO Supply (DV_{DD})	10, 31, 42, 50, 60, 68, 73, 81, 92, 103, 112, 125, 136				
Ground (V_{SS})	1, 6, 13, 15, 18, 26, 30, 36, 40, 47, 54, 62, 69, 72, 78, 82, 87, 95, 99, 106, 109, 114, 118, 124, 129, 133, 140				

2.15 Device Block Diagram

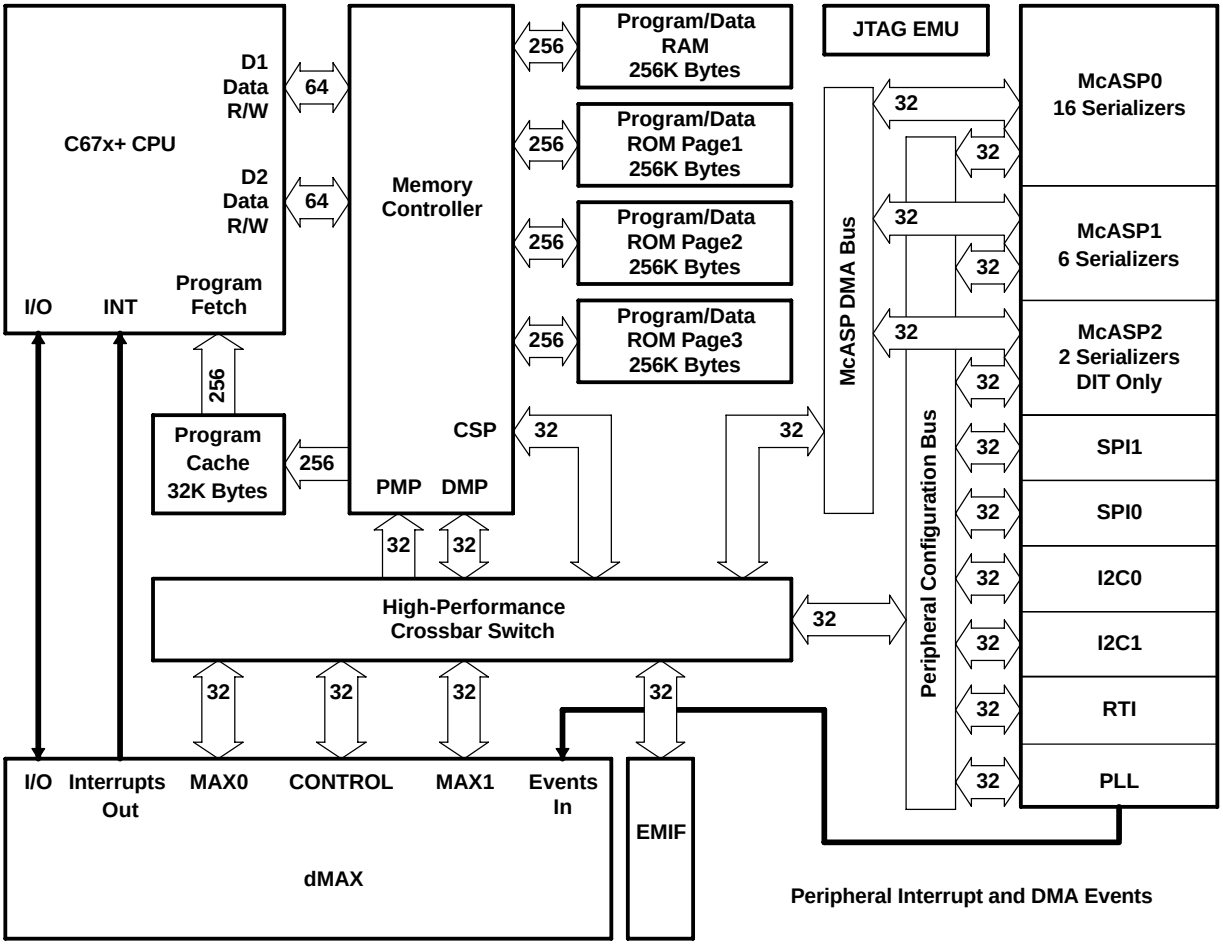

Figure 2-3. DA708 DSP Block Diagram

IC33 : TC9482BFG
IC34 : TC9482BFG

PIN CONNECTIONS

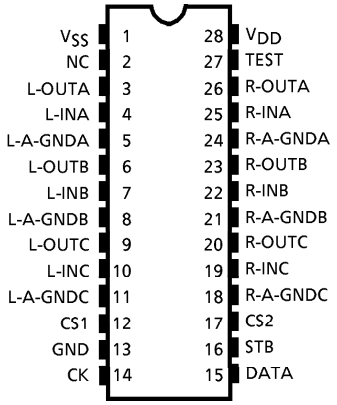

BLOCK DIAGRAM

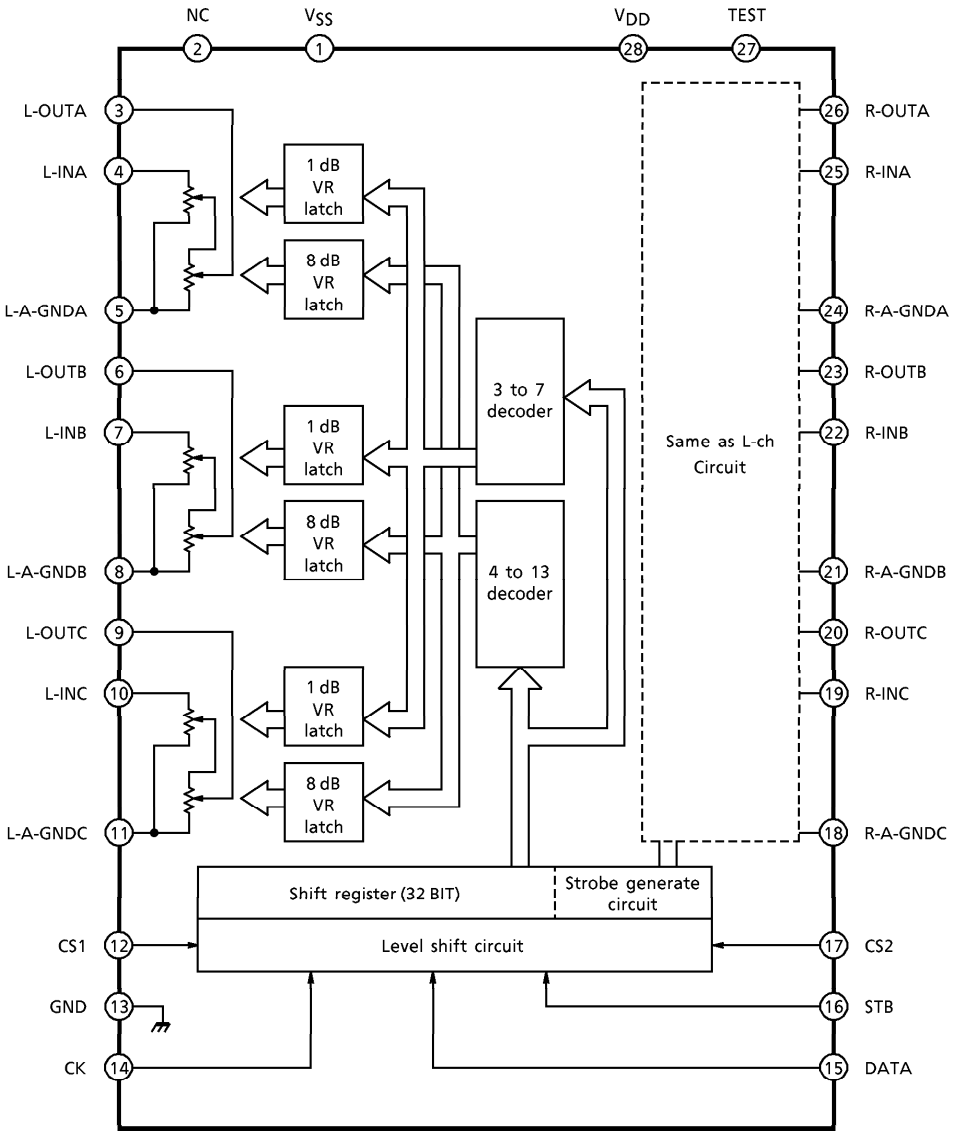

IC33 : TC9482BFG

PIN DESCRIPTION

PIN No.	SYMBOL	PIN NAME	FUNCTION	REMARK
1	V_{SS}	Negative power supply pin	● Power Supply Pins	—
28	V_{DD}	Positive power supply pin		
3	L-OUTA	Volume output pin	● Volume circuit 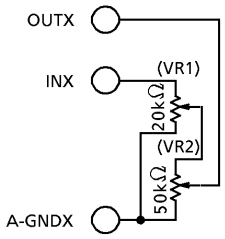	—
26	R-OUTA			
6	L-OUTB			
22	R-OUTB			
9	L-OUTC			
19	R-OUTC			
4	L-INA	Volume input pin		
25	R-INA			
7	L-INB			
22	R-INB			
10	L-INC			
19	R-INC			
5	L-A-GNDA	Analog GND pin		
24	R-A-GNDA			
8	L-A-GNDB			
21	R-A-GNDB			
11	L-A-GNDC			
18	R-A-GNDC			
12	CS1	Chip select input pin	Up to 4 chips on the same bus can be used by switching over chip select code.	—
17	CS2			
14	CK	Clock input pin	Inputs clock for serial data transfer.	Low threshold value input pin
15	DATA	Data input pin	Inputs control data for setting volume.	
16	STB	Strobe input pin	Inputs strobe for writing data.	
13	GND	Digital GND pin	Digital ground pin	—
27	TEST	Test Pin	Normally connect to V_{DD} pin.	—
2	NC	No connection	—	—

IC34 : M29W800DT70N

Figure 2. Logic Diagram

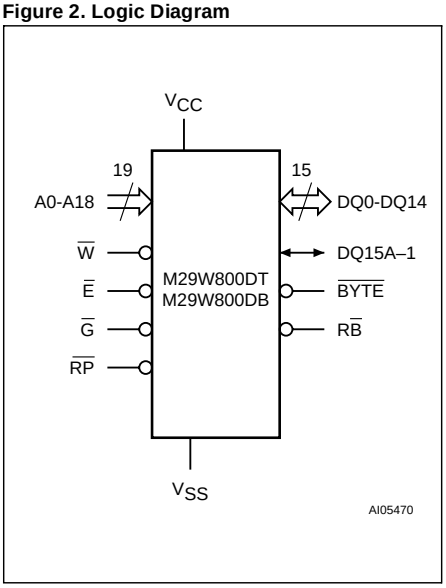

Table 1. Signal Names

A0-A18	Address Inputs
DQ0-DQ7	Data Inputs/Outputs
DQ8-DQ14	Data Inputs/Outputs
DQ15A–1	Data Input/Output or Address Input
$\overline{E}$	Chip Enable
$\overline{G}$	Output Enable
$\overline{W}$	Write Enable
$\overline{RP}$	Reset/Block Temporary Unprotect
$\overline{RB}$	Ready/Busy Output (not available on SO44 package)
$\overline{BYTE}$	Byte/Word Organization Select
V_{CC}	Supply Voltage
V_{SS}	Ground
NC	Not Connected Internally

IC35 : M12L64164A7T

FUNCTIONAL BLOCK DIAGRAM

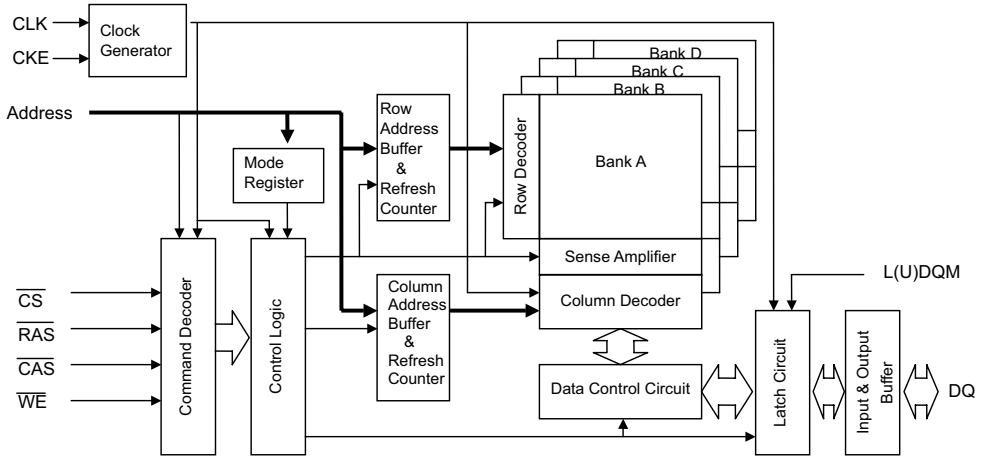

PIN FUNCTION DESCRIPTION

PIN	NAME	INPUT FUNCTION
CLK	System Clock	Active on the positive going edge to sample all inputs
$\overline{CS}$	Chip Select	Disables or enables device operation by masking or enabling all inputs except CLK , CKE and L(U)DQM
CKE	Clock Enable	Masks system clock to freeze operation from the next clock cycle. CKE should be enabled at least one cycle prior new command. Disable input buffers for power down in standby.
A0 ~ A11	Address	Row / column address are multiplexed on the same pins. Row address : RA0~RA11, column address : CA0~CA7
A12 , A13	Bank Select Address	Selects bank to be activated during row address latch time. Selects bank for read / write during column address latch time.
$\overline{RAS}$	Row Address Strobe	Latches row addresses on the positive going edge of the CLK with $\overline{RAS}$ low. Enables row access & precharge.
$\overline{CAS}$	Column Address Strobe	Latches column address on the positive going edge of the CLK with $\overline{CAS}$ low. Enables column access.
$\overline{WE}$	Write Enable	Enables write operation and row precharge. Latches data in starting from $\overline{CAS}$, $\overline{WE}$ active.
L(U)DQM	Data Input / Output Mask	Makes data output Hi-Z, t_{SHZ} after the clock and masks the output. Blocks data input when L(U)DQM active.
DQ0 ~ DQ15	Data Input / Output	Data inputs / outputs are multiplexed on the same pins.
VDD / VSS	Power Supply / Ground	Power and ground for the input buffers and the core logic.
VDDQ / VSSQ	Data Output Power / Ground	Isolated power supply and ground for the output buffers to provide improved noise immunity.
NC	No Connection	This pin is recommended to be left No Connection on the device.

Sil 9033 Features

HDMI Receiver

Industry-Standard Compliance

- HDMI 1.2
- DVI 1.0
- EIA/CEA-861C
- HDCP 1.1

Digital Video Output

- Dual integrated cores
- Supports DTV (480i/576i/480p/576p/720p/1080i/1080p) and PC (VGA/XGA/SXGA/WSXGA.UXGA) resolutions
- Flexible digital video interface
  - 24-bit RGB/YCbCr 4:4:4
  - 16/20/24-bit YCbCr 4:2:2
  - 8/10/12-bit YCbCr 4:2:2 (ITU-R BT.656)
  - 12-bit digital media interface
- Integrated RGB ⟷ YCbCr color space conversion
- 4:2:2 ⟷ 4:4:4 converter

Digital Audio Output

- Industry-standard S/PDIF and I²S output
- Supports high-end audio including SACD and DVD-Audio
  - 2-ch. 32-192kHz or
  - 8-ch. 32-192kHz
- Programmable I²S output supports numerous low-cost audio DACs
- Supports IEC60958 2-channel PCM
- Capable of carrying IEC61937 compressed audio (Dolby Digital, DTS,etc.)

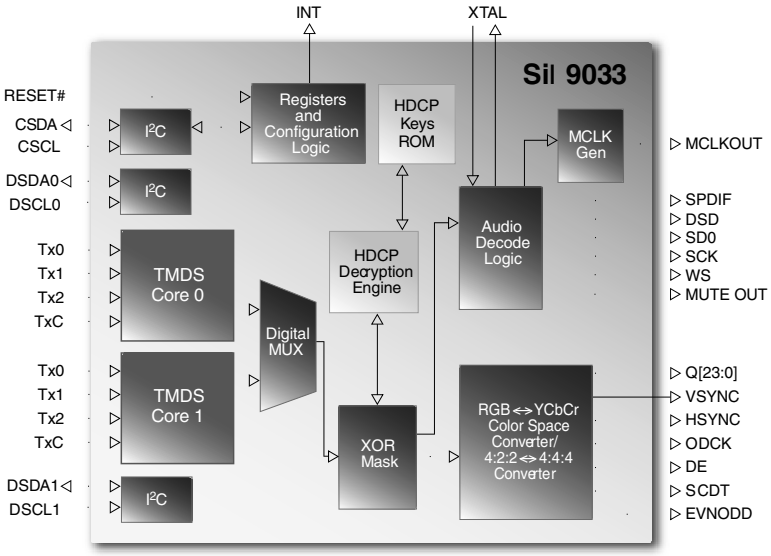

Content Protection

- Integrated HDCP cipher engine
- Built-in HDCP BIST
- Pre-programmed HDCP keys
  - Simplify manufacturing process
  - Most secure solution available
  - Lower system, manufacturing costs
- New built-in HDCP self-test
- Supports HDCP repeater capability
- Decrypts both video and audio

System Operation

- Register-programmable via slave I²C interface
- Auto video mode simplifies design
- Auto audio mode allows more robust system
- Flexible interrupt registers with interrupt pin

Power Management

- 1.8V core provides low-power operation
- Flexible power-down modes

Silicon Image's Sil 9033 Starter Kit (CP9033HDMI)

Contents include:

Hardware

- Sil 9033 Receiver Daughter Board
- HDMI to HDMI cable

Software

- HDMIGear Receiver Software Tool

Documentation

- User's Guide
- Schematics
- Bill of Materials (BOM)

IC36 : TC74VCX157FT
IC38 : TC74VCX157FT

Pin Assignment (top view)

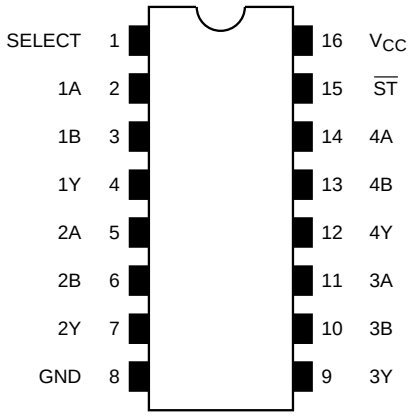

IEC Logic Symbol

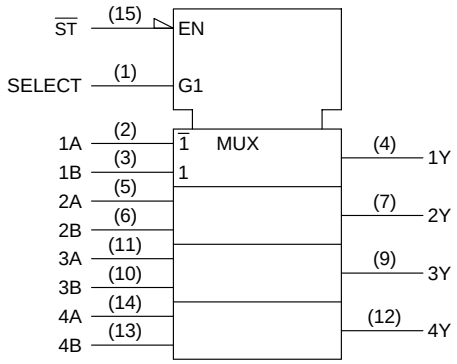

Truth Table

Inputs				Outputs
$\overline{ST}$	SELECT	A	B	Y
H	X	X	X	L
L	L	L	X	L
L	L	H	X	H
L	H	X	L	L
L	H	X	H	H

X: Don't care

IC38 : TC74VHC157FT

TRUTH TABLE

INPUTS				OUTPUT
$\overline{ST}$	SELECT	A	B	
H	X	X	X	L
L	L	L	X	L
L	L	H	X	H
L	H	X	L	L
L	H	X	H	H

X : Don't Care

IEC LOGIC SYMBOL

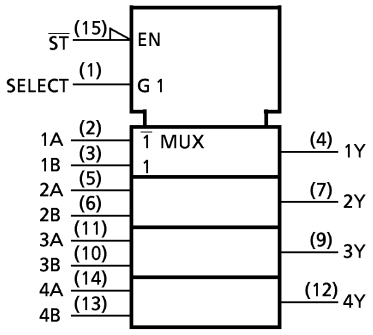

PIN ASSIGNMENT

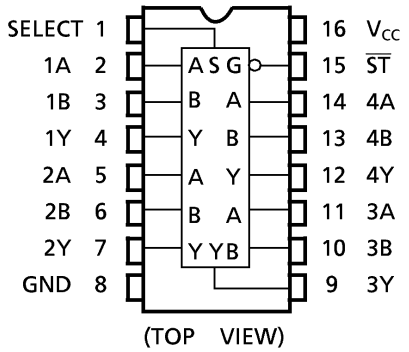

(TOP VIEW)

IC39 : TC7WH157FU

LOGIC DIAGRAM

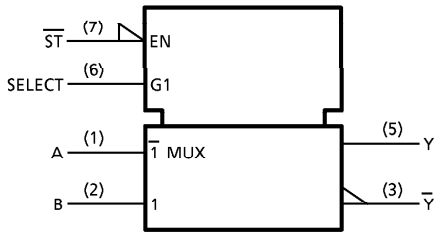

TRUTH TABLE

INPUTS				OUTPUTS	
$\overline{ST}$	SELECT	A	B	Y	$\overline{Y}$
H	×	×	×	L	H
L	L	L	×	L	H
L	L	H	×	H	L
L	H	×	L	L	H
L	H	×	H	H	L

× : Don't care

IC41 : SiL 9030CTU-7

SiI 9030 Features

PanelLink Cinema Transmitter

Industry-Standard Compliance

- HDMI 1.0
- DVI 1.0
- EIA/CEA-861B
- HDCP 1.1

Digital Video Output

- Integrated PanelLink® core
- Supports DTV (480i/576i/480p/576p/720p/1080i/1080p) and PC (VGA/XGA/SXGA/WSXGA) resolutions
- Flexible video interface supports DVD and HD MPEG decoders
  - 12/24-bit RGB YCbCr 4:4:4
  - 16/20/24-bit YCbCr 4:2:2
  - 8/10/12-bit YCbCr 4:2:2 (ITU-R BT.601 & BT.656)
- Integrated YCbCr ↔ RGB color space conversion
- 4:2:2↔ 4:4:4 up-converter
- Programmable Data Enable (DE) generator

Digital Audio Output

- DVD-Audio support thru 4×I²S inputs
- Supports 2-channel 192kHz or 8-channel 96kHz
- Supports IEC60958 2-channel PCM or IEC61937 compressed audio (Dolby Digital, DTS, etc.)
- Industry-standard S/PDIF input

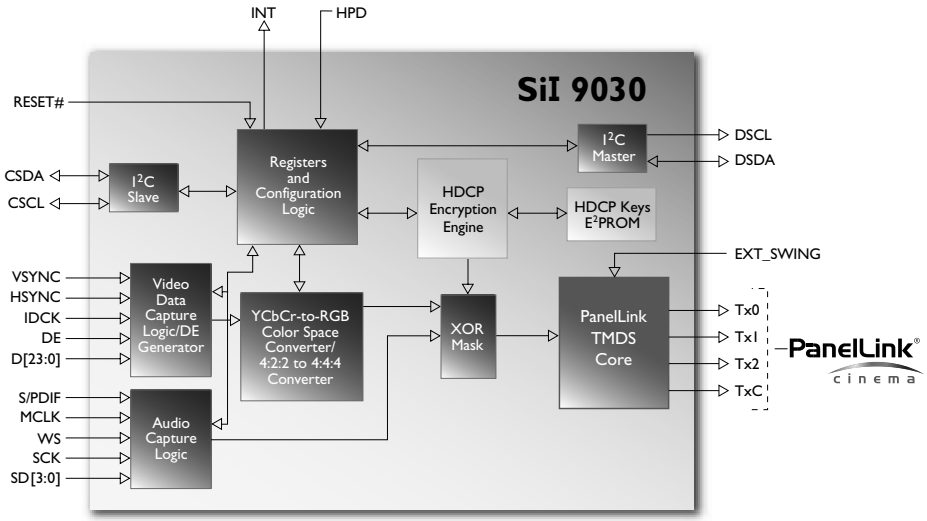

Content Protection

- Integrated HDCP cipher engine
- Pre-programmed HDCP keys
  - Simplify manufacturing process
  - Most secure solution available
  - Lower system, manufacturing costs
- Encrypts both video and audio

System Operation

- Register-programmable via slave I²C interface
- Master I²C simplifies system design
- Flexible interrupt registers with interrupt pin
- Monitor detection supported through hot plug and receiver detection

Power Management

- 1.8V core provides low-power operation
- Flexible power-down modes

Silicon Image's SiI 9030 Starter Kit (CP9030HDMI)

Contents include:

Hardware

- SiI 9030 Transmitter Stand Alone Board
- HDMI to HDMI cable

Software

- HDMIGear Software Tool

Documentation

- User's Guide
- Schematics
- Bill of Materials (BOM)

114 dB, 192 kHz 8-Channel D/A Converter

Features

- 24-bit Conversion
- Up to 192 kHz Sample Rates
- 114 dB Dynamic Range
- -100 dB THD+N
- Supports PCM and DSD Data Formats
- Selectable Digital Filters
- Volume Control with Soft Ramp
  - 1 dB Step Size
  - Zero Crossing Click-free Transitions
- Dedicated DSD inputs
- Low Clock Jitter Sensitivity
- Simultaneous Support for Two Synchronous Sample Rates for DVD Audio
- µC or Stand-alone Operation

Description

The CS4382 is a complete 8-channel digital-to-analog system including digital interpolation, fifth-order delta-sigma digital-to-analog conversion, digital de-emphasis, volume control and analog filtering. The advantages of this architecture include: ideal differential linearity, no distortion mechanisms due to resistor matching errors, no linearity drift over time and temperature and a high tolerance to clock jitter.

The CS4382 accepts PCM data at sample rates from 4 kHz to 192 kHz, DSD audio data, and operates over a wide power supply range. These features are ideal for multi-channel audio systems including DVD players, SACD players, A/V receivers, digital TV's, mixing consoles, effects processors, and automotive audio systems.

ORDERING INFORMATION

CS4382-KQZ, Lead Free -10 to 70 °C 48-pin LQFP
CDB4382 Evaluation Board

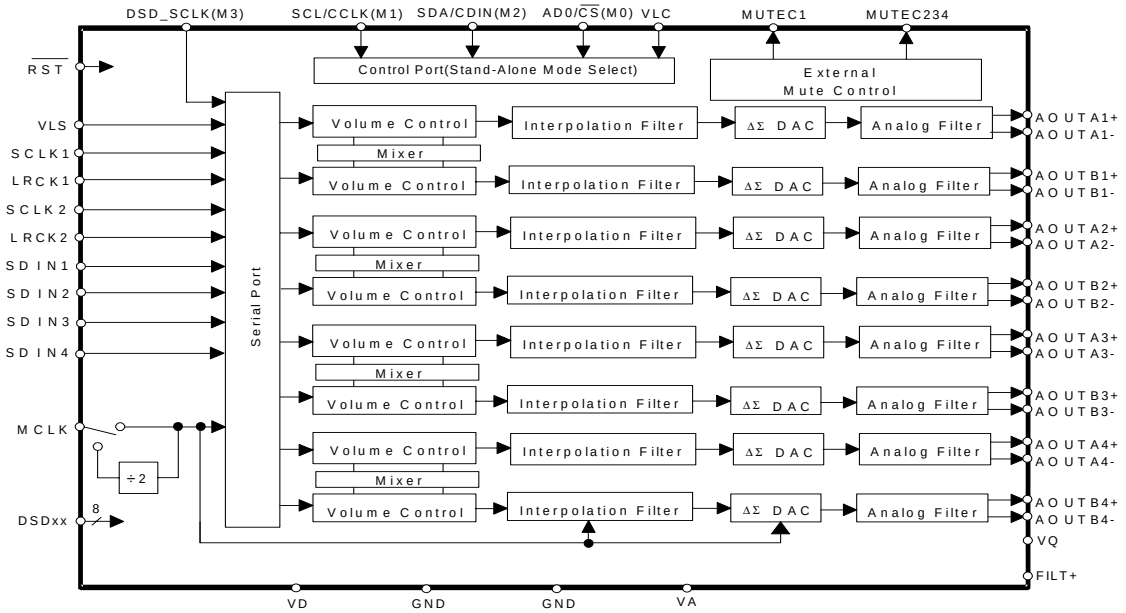

IC41 : CS4382A-CQ

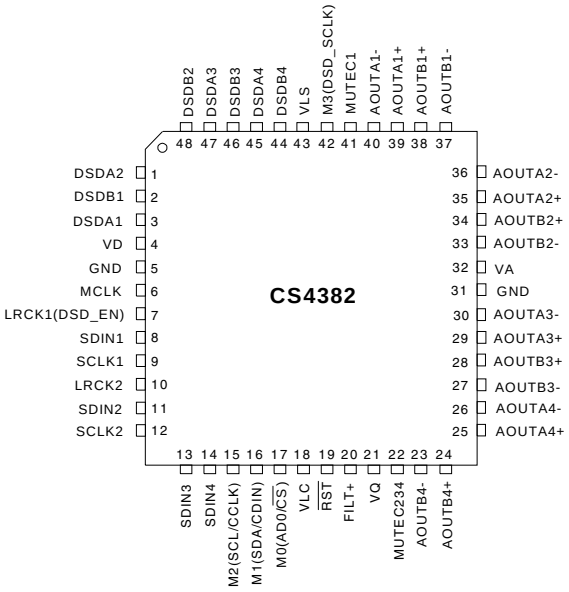

Pin Name	#	Pin Description
VD	4	**Digital Power** (*Input*) **-** Positive power supply for the digital section. Refer to the Recommended Operating Conditions for appropriate voltages.
GND	5 31	**Ground** (*Input*) - Ground reference. Should be connected to analog ground.
MCLK	6	**Master Clock** (*Input*) - Clock source for the delta-sigma modulator and digital filters. Table 5 illustrates several standard audio sample rates and the required master clock frequency.
LRCK1 **LRCK2**	7 10	**Left Right Clock** (*Input*) - Determines which channel, Left or Right, is currently active on the serial audio data line. The frequency of the left/right clock must be at the audio sample rate, Fs.
SDIN1 **SDIN2** **SDIN3** **SDIN4**	8 11 13 14	**Serial Audio Data Input** (*Input*) - Input for two's complement serial audio data.
SCLK1 **SCLK2**	9 12	**Serial Clock** (*Input*) - Serial clock for the serial audio interface.
VLC	18	**Control Port Power** (*Input*) **-** Determines the required signal level for the control port. Refer to the Recommended Operating Conditions for appropriate voltages.
$\overline{\text{RST}}$	19	**Reset** (*Input*) - The device enters a low power mode and all internal registers are reset to their default settings when low.
FILT+	20	**Positive Voltage Reference** (*Output*) **-** Positive reference voltage for the internal sampling circuits. Requires the capacitive decoupling to analog ground, as shown in the Typical Connection Diagram.
VQ	21	**Quiescent Voltage** (*Output*) - Filter connection for internal quiescent voltage. VQ must be capacitively coupled to analog ground, as shown in the Typical Connection Diagram. The nominal voltage level is specified in the Analog Characteristics and Specifications section. VQ presents an appreciable source impedance and any current drawn from this pin will alter device performance. However, VQ can be used to bias the analog circuitry assuming there is no AC signal component and the DC current is less than the maximum specified in the Analog Characteristics and Specifications section.

IC41 : CS4382A-CQ

Pin Name	#	Pin Description
MUTEC1 **MUTEC234**	41 22	**Mute Control** (*Output*) - The Mute Control pins go high during power-up initialization, reset, muting, power-down or if the master clock to left/right clock frequency ratio is incorrect. These pins are intended to be used as a control for external mute circuits to prevent the clicks and pops that can occur in any single supply system. The use of external mute circuits are not mandatory but may be desired for designs requiring the absolute minimum in extraneous clicks and pops.
AOUTA1 +,- **AOUTB1 +,-** **AOUTA2 +,-** **AOUTB2 +,-** **AOUTA3 +,-** **AOUTB3 +,-** **AOUTA4 +,-** **AOUTB4 +,-**	39, 40 38, 37 35, 36 34, 33 29, 30 28, 27 25, 26 24, 23	**Differential Analog Output** (*Output*) - The full scale differential analog output level is specified in the Analog Characteristics specification table.
VA	32	**Analog Power** (*Input*) **-** Positive power supply for the analog section. Refer to the Recommended Operating Conditions for appropriate voltages.
VLS	43	**Serial Audio Interface Power** (*Input*) **-** Determines the required signal level for the serial audio interface. Refer to the Recommended Operating Conditions for appropriate voltages.
Control Port Definitions		
SCL/CCLK	15	**Serial Control Port Clock** (*Input*) - Serial clock for the serial control port. Requires an external pull-up resistor to the logic interface voltage in I^2C mode as shown in the Typical Connection Diagram.
SDA/CDIN	16	**Serial Control Data** (*Input/Output*) - SDA is a data I/O line in I^2C mode and requires an external pull-up resistor to the logic interface voltage, as shown in the Typical Connection Diagram. CDIN is the input data line for the control port interface in SPI mode.
AD0/$\overline{CS}$	17	**Address Bit 0 (I^2C) / Control Port Chip Select (SPI)** (*Input*) - AD0 is a chip address pin in I^2C mode; $\overline{CS}$ is the chip select signal for SPI format.
Stand-Alone Definitions		
M0 **M1** **M2** **M3**	17 16 15 42	**Mode Selection** (*Input*) - Determines the operational mode of the device as detailed in Tables 6 and 7.
DSD Definitions		
DSD_SCLK	42	**DSD Serial Clock** (*Input*) - Serial clock for the Direct Stream Digital audio interface.
DSD_EN	7	**DSD-Enable** *(Input)* - When held at logic ‘1’ the device will enter DSD mode (Stand-Alone mode only).
DSDA1 **DSDB1** **DSDA2** **DSDB2** **DSDA3** **DSDB3** **DSDA4** **DSDB4**	3 2 1 48 47 46 45 44	**Direct Stream Digital Input** (*Input*) - Input for Direct Stream Digital serial audio data.

IC61 : NJM2285MTE1

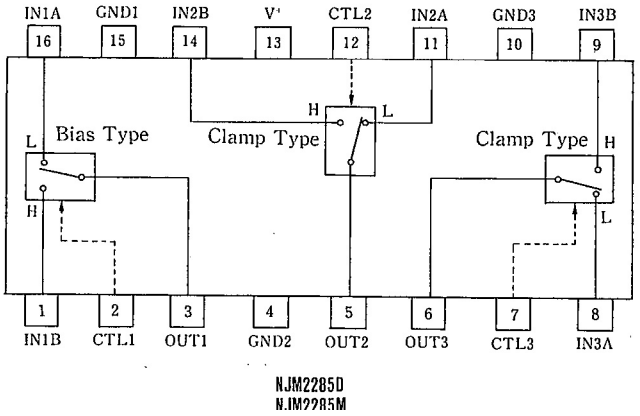

IC61 : CS4392KZZ

1. PIN DESCRIPTION - PCM DATA MODE

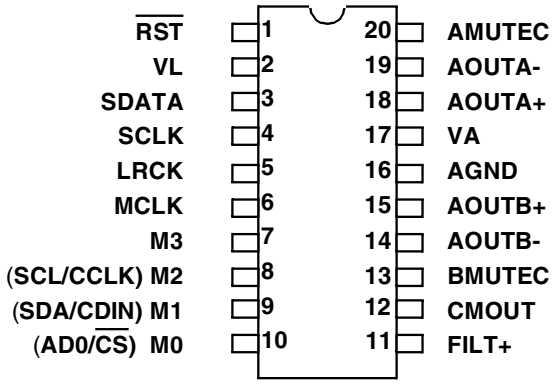

RST	1	**Reset** (*Input*) - Powers down device and resets all internal registers to their default settings.
VL	2	**Logic Power** (*Input*) **-** Positive power for the digital input/output.
SDATA	3	**Serial Audio Data** (*Input*) - Input for two's complement serial audio data.
SCLK	4	**Serial Clock** (*Input/Output*) - Serial clock for the serial audio interface.
LRCK	5	**Left Right Clock** (*Input/Output*) - Determines which channel, Left or Right, is currently active on the serial audio data line.
MCLK	6	**Master Clock** (*Input*) - Clock source for the delta-sigma modulator and digital filters.
FILT+	11	**Positive Voltage Reference** (*Output*) **-** Positive reference voltage for the internal sampling circuits.
CMOUT	12	**Common Mode Voltage** (*Output*) - Filter connection for internal quiescent voltage.
AMUTEC **BMUTEC**	20 13	**Mute Control** (*Output*) - The Mute Control pin goes high during power-up initialization, reset, muting, power-down or if the master clock to left/right clock frequency ratio is incorrect.
AOUTB- **AOUTB+** **AOUTA+** **AOUTA**	14 15 18 19	**Differential Analog Output** (*Outputs*) - The full scale differential analog output level is specified in the Analog Characteristics specification table.
AGND	16	**Ground** (*Input*)
VA	17	**Analog Power** (*Input*) **-** Positive power for the analog section.
Control Port Mode Definitions		
M3	7	**Mode Selection** (*Input*) - This pins should be tied to GND level during control port mode.
SCL/CCLK	8	**Serial Control Port Clock** (*Input*) - Serial clock for the serial control port.
SDA/CDIN	9	**Serial Control Data** (*Input/Output*) - SDA is a data I/O line in I^2C mode. CDIN is the input data line for the control port interface in SPI mode.
AD0/CS	10	**Address Bit 0 (I^2C) / Control Port Chip Select (SPI)** (*Input/Output*) - AD0 is a chip address pin in I^2C mode; CS is the chip select signal for SPI format.
Stand-Alone Mode Definitions		
M3 **M2** **M1** **M0**	7 8 9 10	**Mode Selection** (*Input*) - Determines the operational mode of the device.

IC61 : CS4392KZZ

1.1 PIN DESCRIPTION - DSD mode

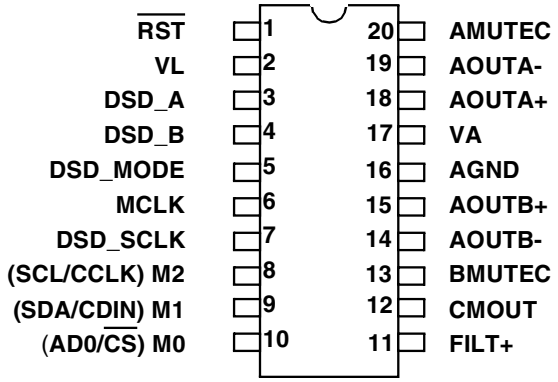

DSD_A **DSD_B**	3 4	**DSD Data** (*Input*) - Input for Direct Stream Digital serial audio data.
DSD_Mode	5	**DSD Mode** *(Input)* - In stand alone mode, this pin must be set to a logic '1' for operation of DSD Mode.
DSD_SCLK	7	**DSD Serial Clock** (*Input*/*Output*) - Serial clock for the Direct Stream Digital audio interface.

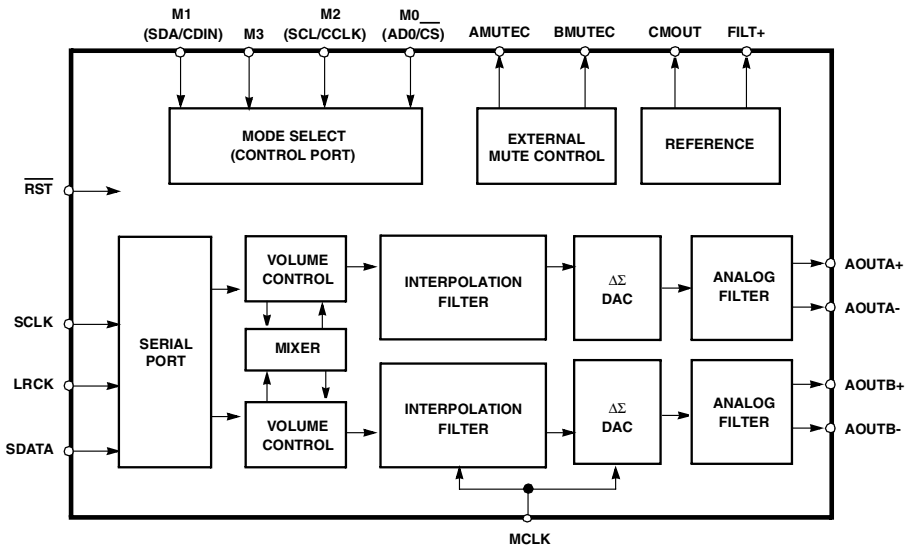

IC62 : ADV7401BS80

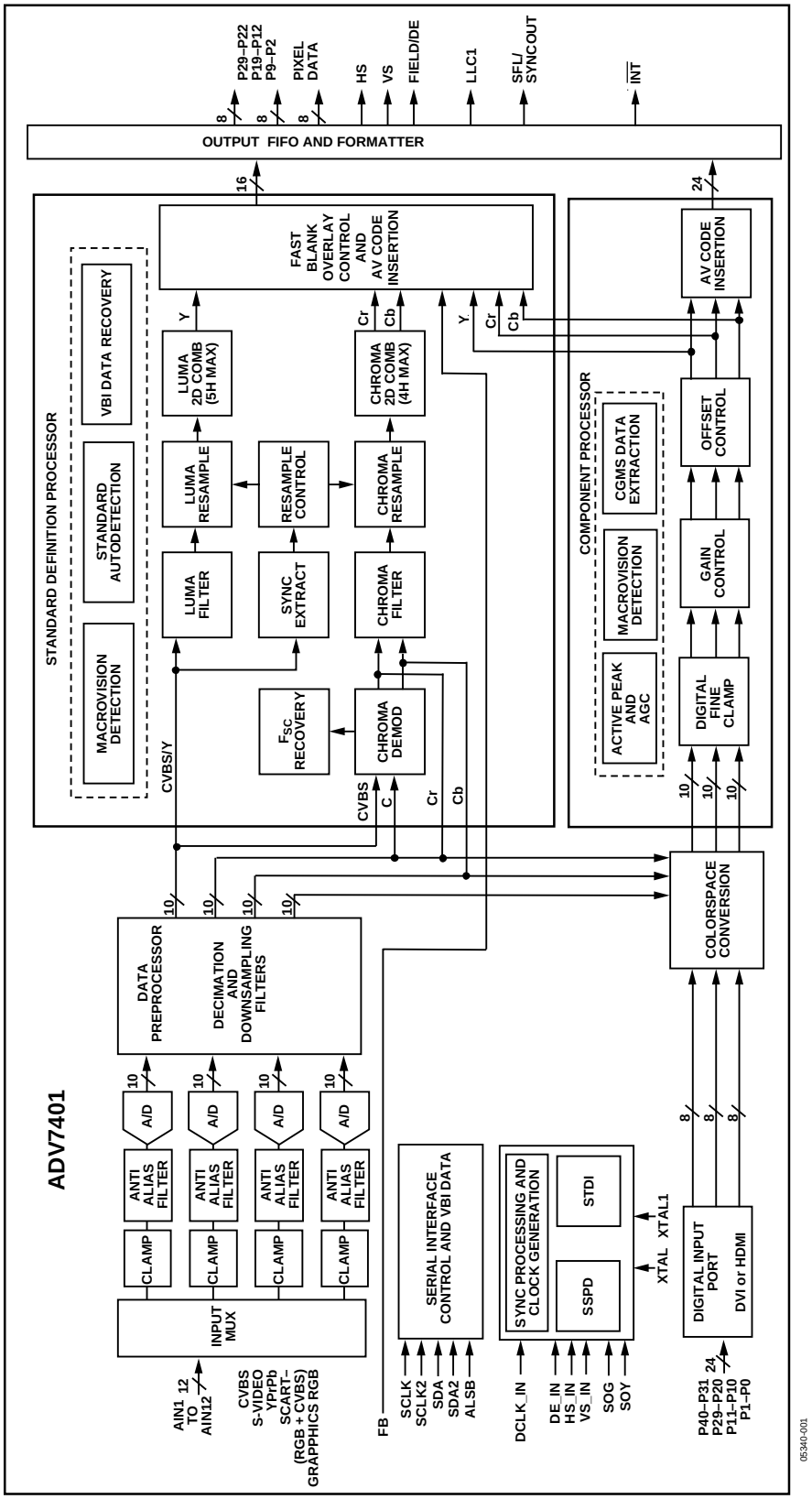

IC62 : ADV7401BS80

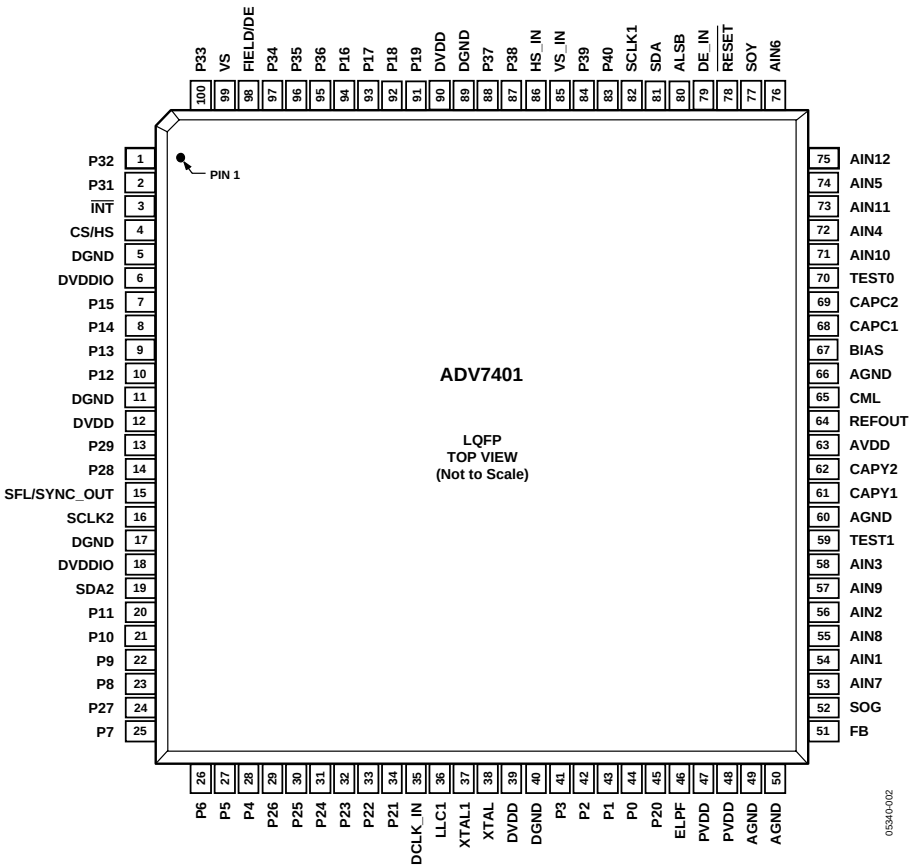

Figure 2.ADV7401 Pin Configuration

Table 7. Pin Function Descriptions

Pin No.	Mnemonic	Type	Function
5, 11, 17, 40, 89	DGND	G	Digital Ground.
49, 50, 60, 66	AGND	G	Analog Ground.
6, 18	DVDDIO	P	Digital I/O Supply Voltage (3.3 V).
12, 39, 90	DVDD	P	Digital Core Supply Voltage (1.8 V).
63	AVDD	P	Analog Supply Voltage (3.3 V).
47, 48	PVDD	P	PLL Supply Voltage (1.8 V).
51	FB	I	Fast Switch Overlay Input. This pin switches between CVBS and RGB analog signals.
54, 56, 58, 72, 74, 76, 53, 55, 57, 71, 73, 75	AIN1 to AIN12	I	Analog Video Input Channels.
42, 41, 28, 27, 26, 25, 23, 22, 10, 9, 8, 7, 94, 93, 92, 91	P2 to P9, P12 to P19	O	Video Pixel Output Port.
33, 32, 31, 30, 29, 24, 14, 13	P22 to P29	I/O	Video Input/Output Port
44, 43, 21, 20, 45, 34, 2, 1, 100, 97, 96, 95, 88, 87, 84, 83	P0 to P1, P10 to P11, P20 to P21, P31 to P40	I	Video Pixel Input Port.
3	$\overline{\text{INT}}$	O	Interrupt. This pin can be active low or active high. When SDP/CP status bits change this pin triggers. The set of events which triggers an interrupt are under user control.

IC62 : ADV7401BS80

Pin No.	Mnemonic	Type	Function
4	HS/CS	O	HS is a Horizontal Synchronization Output Signal (SDP and CP modes). CS is a Digital Composite Synchronization Signal (and can be selected while in CP mode).
99	VS	O	Vertical Synchronization Output Signal (SDP and CP modes).
98	FIELD/DE	O	Field Synchronization Output Signal (all interlaced video modes). This pin also can be enabled as a Data Enable signal (DE) in CP mode to allow direct connection to a HDMI/DVI Tx IC.
81, 19	SDA1, SDA2	I/O	I^2C Port Serial Data Input/Output Pins. SDA1 is the data line for the Control port and SDA2 is the data line for the VBI readback port.
82, 16	SCLK1, SCLK2	I	I^2C port serial clock input (max clock rate of 400 kHz). SCLK1 is the clock line for the Control port and SCLK2 is the clock line for the VBI data readback port.
80	ALSB	I	This pin selects the I^2C address for the ADV7401 Control and VBI readback ports. ALSB set to a logic 0 sets the address for a write to control port of 0x40 and the readback address for the VBI port of 0x21. ALSB set to a logic high sets the address for a write to control port of 0x42 and the readback address for the VBI port of 0x23.
78	$\overline{\text{RESET}}$	I	System reset input, active low. A minimum low reset pulse width of 5 ms is required to reset the ADV7401 circuitry.
36	LLC1	O	LLC1 is a line locked output clock for the pixel data (range is 12.825 MHz to 140 MHz for ADV7401KSTZ-140; 12.825 MHz to 110 MHz for ADV7401BSTZ-110; 12.825 MHz to 80 MHz for ADV7401BSTZ-80).
38	XTAL	I	Input pin for 28.6363 MHz crystal, or can be overdriven by an external 3.3 V 28.6363 MHz clock oscillator source to clock the ADV7401.
37	XTAL1	O	This pin should be connected to the 28.6363 MHz crystal or left as a no connect if an external 3.3 V 28.6363 MHz clock oscillator source is used to clock the ADV7401. In crystal mode the crystal must be a fundamental crystal.
46	ELPF	O	The recommend external loop filter must be connected to this ELPF pin.
70	TEST0		This pin should be left unconnected or alternatively tied to AGND.
59	TEST1	O	This pin should be left unconnected.
15	SFL/SYNC_OUT	O	Subcarrier Frequency Lock (SFL). This pin contains a serial output stream which can be used to lock the subcarrier frequency when this decoder is connected to any Analog Devices digital video encoder. SYNC_OUT is the sliced sync output signal only available in CP mode.
64	REFOUT	O	Internal Voltage Reference Output.
65	CML	O	Common-Mode Level Pin (CML)for the internal ADCs.
61, 62	CAPY1 to CAPY2	I	ADC Capacitor Network.
68, 69	CAPC1 to CAPC2	I	ADC Capacitor Network.
67	BIAS	O	External Bias Setting Pin. Connect the recommended resistor (1.35kΩ) between pin and ground.
86	HS_IN/CS_IN	I	Can be configured in CP mode to be either a digital HS input signal or a digital CS input signal used to extract timing in a 5-wire or 4-wire RGB mode.
85	VS_IN	I	VS input signal. Used in CP mode for 5-wire timing mode.
79	DE_IN	I	Data Enable Input Signal. Used in 24-bit digital input port mode (for example, processing 24-bit RGB data from a DVI Rx IC).
35	DCLK_IN	I	Clock Input Signal. Used in 24-bit digital input mode (for example, processing 24-bit RGB data from a DVI Rx IC) and also in digital CVBS input mode.
52	SOG	I	Sync on Green Input. Used in embedded sync mode.
77	SOY	I	Sync on Luma Input. Used in embedded sync mode.

IC63 : CD0040AF

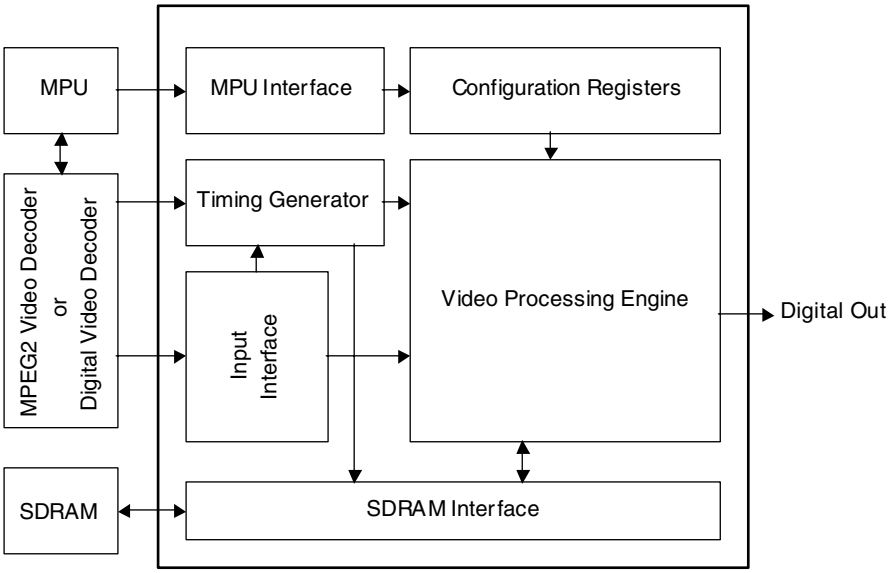

Fig. 2-1: System Block Diagram

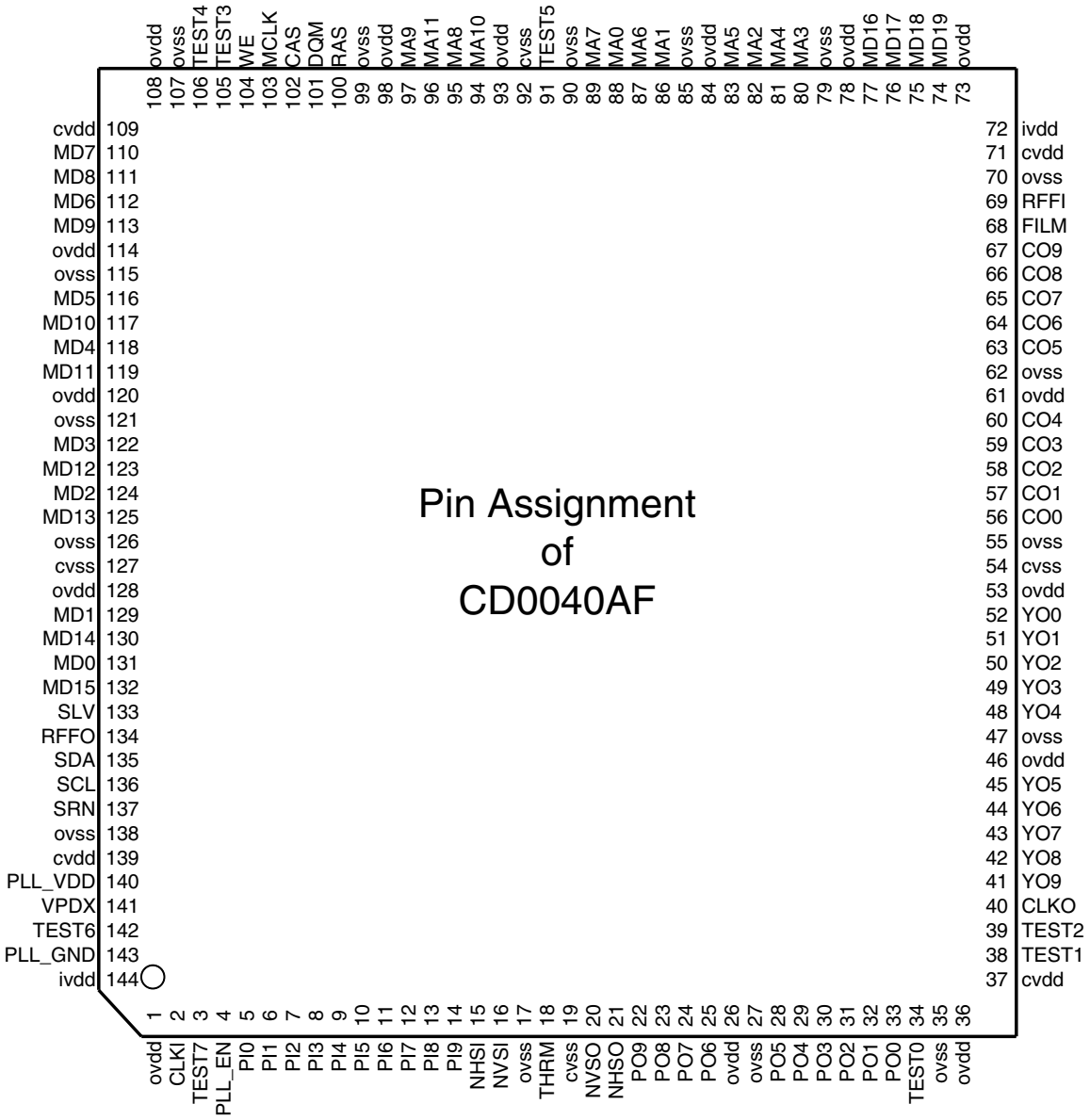

IC63 : CD0040AF

No.	Name	I/O[1]	Attribute	Functional Description
1	OVDD	P	-	Positive supply voltage(+3.3V) for Pad Ring
2	CLKI	In	CMOS	System Clock Input (27MHz)
3	TEST7	In	CMOS	Test purpose only(must be connected to Ground)
4	PLL_EN	In	CMOS	PLL enable
5	PI0	In	CMOS	ITU-R BT.656/601 Input (LSB)
6	PI1	In	CMOS	ITU-R BT.656/601 Input
7	PI2	In	CMOS	ITU-R BT.656/601 Input
8	PI3	In	CMOS	ITU-R BT.656/601 Input
9	PI4	In	CMOS	ITU-R BT.656/601 Input
10	PI5	In	CMOS	ITU-R BT.656/601 Input
11	PI6	In	CMOS	ITU-R BT.656/601 Input
12	PI7	In	CMOS	ITU-R BT.656/601 Input
13	PI8	In	CMOS	ITU-R BT.656/601 Input
14	PI9	In	CMOS	ITU-R BT.656/601 Input (MSB)
15	NHSI	In	Schmitt	Active low horizontal sync input
16	NVSI	In	Schmitt	Active low vertical sync input
17	OVSS	P	-	Digital ground for Pad Ring
18	THMD	In	Schmitt	Through mode setting terminal. Usually, this must be connected to ground.
19	CVSS	P	-	Digital ground for Core
20	NVSO	Out	2mA	Active low vertical sync output (Interlace or Progressive) Refer “11.2Video Output”
21	NHSO	Out	2mA	Active low horizontal sync output(Interlace or Progressive) Refer “11.2Video Output”
22	PO9	Inout	CMOS / 2mA	ITU-R BT.656/601 output (MSB) / clamp signal output / ITU-R BT. 601 Cb Cr input(MSB)
23	PO8	Inout	CMOS / 2mA	ITU-R BT.656/601 output / Video active signal output / ITU-R BT. 601 CbCr input. Refer “11.1Video Input””11.2Video Output””11.3Through Mode”
24	PO7	Inout	CMOS / 2mA	ITU-R BT.656/601 output / Video blanking signal output / ITU-R BT. 601 CbCr input Refer “11.1Video Input””11.2Video Output”
25	PO6	Inout	CMOS / 2mA	ITU-R BT.656/601 output / ITU-R BT.601 CbCr input Refer “11.1Video Input””11.2Video Output”11.3Through Mode”
26	OVDD	P	-	Positive supply voltage (+3.3V) for Pad Ring
27	OVSS	P	-	Digital ground for Pad Ring
28	PO5	Inout	CMOS / 2mA	ITU-R BT.656/601 output / ITU-R BT.601 CbCr input Refer “11.1Video Input””11.2Video Output””11.3Through Mode”
29	PO4	Inout	CMOS / 2mA	ITU-R BT.656/601 output / ITU-R BT.601 CbCr input Refer “11.1Video Input””11.2Video Output””11.3Through Mode”
30	PO3	Inout	CMOS / 2mA	ITU-R BT.656/601 output / ITU-R BT.601 CbCr input Refer “11.1Video Input””11.2Video Output””11.3Through Mode”
31	PO2	Inout	CMOS / 2mA	ITU-R BT.656/601 output / ITU-R BT.601 CbCr input Refer “11.1Video Input””11.2Video Output””11.3Through Mode”
32	PO1	Inout	CMOS / 2mA	ITU-R BT.656/601 output / ITU-R BT.601 CbCr input *2 Refer “11.1Video Input””11.2Video Output””11.3Through Mode”
33	PO0	Inout	CMOS / 2mA	ITU-R BT.656/601 output (LSB) / ITU-R BT.601 CbCr input *2 Refer “11.1Video Input””11.2Video Output””11.3Through Mode”
34	TEST0	In	CMOS	Test purpose only (must be connected to ground)
35	OVSS	P	-	Digital ground for Pad Ring
36	OVDD	P	-	Positive supply voltage (+3.3V) for Pad Ring
37	CVDD	P	-	Digital positive supply voltage (+2.5V) for core
38	TEST1	In	CMOS	Test purpose only (must be connected to ground)
39	TEST2	In	CMOS	Test purpose only (must be connected to ground)
40	CLKO	Out	2mA	Clock output(27MHz)
41	YO9	Out	4mA	ANSI/SMPTE 293M Y output(MSB)
42	YO8	Out	4mA	ANSI/SMPTE 293M Y output
43	YO7	Out	4mA	ANSI/SMPTE 293M Y output
44	YO6	Out	4mA	ANSI/SMPTE 293M Y output
45	YO5	Out	4mA	ANSI/SMPTE 293M Y output
46	OVDD	P	-	Positive supply voltage (+3.3V) for Pad Ring
47	OVSS	P	-	Digital ground for Pad Ring
48	YO4	Out	4mA	ANSI/SMPTE 293M Y output
49	YO3	Out	4mA	ANSI/SMPTE 293M Y output
50	YO2	Out	4mA	ANSI/SMPTE 293M Y output
51	YO1	Out	4mA	ANSI/SMPTE 293M Y output
52	YO0	Out	4mA	ANSI/SMPTE 293M Y output (LSB)
53	OVDD	P	-	Positive supply voltage (+3.3V) for Pad Ring
54	CVSS	P	-	Digital ground for core
55	OVSS	P	-	Digital ground for Pad Ring
56	CO0	Out	4mA	ANSI/SMPTE 293M Cb/Cr output
57	CO1	Out	4mA	ANSI/SMPTE 293M Cb/Cr output
58	CO2	Out	4mA	ANSI/SMPTE 293M Cb/Cr output
59	CO3	Out	4mA	ANSI/SMPTE 293M Cb/Cr output
60	CO4	Out	4mA	ANSI/SMPTE 293M Cb/Cr output
61	OVDD	P	-	Positive supply voltage (+3.3V) for Pad Ring
62	OVSS	P	-	Digital ground for Pad Ring
63	CO5	Out	4mA	ANSI/SMPTE 293M Cb/Cr output
64	CO6	Out	4mA	ANSI/SMPTE 293M Cb/Cr output
65	CO7	Out	4mA	ANSI/SMPTE 293M Cb/Cr output
66	CO8	Out	4mA	ANSI/SMPTE 293M Cb/Cr output
67	CO9	Out	4mA	ANSI/SMPTE 293M Cb/Cr output (MSB)
68	FILM	Out	2mA	Film sequence detection flag output. Refer ”11.4.1.9Film detection Flag Output”
69	RFFI	In	CMOS	MPEG flag (Repeat First Field) input port. Refer”11.4.1.6Film I/P Conversion””11.4.1.8Film Sequence Flag Control Mode”

No.	Name	I/O[1]	Attribute	Functional Description
70	OVSS	P	-	Digital ground for Pad Ring
71	CVDD	P	-	Digital positive supply voltage (+2.5V) for core
72	IVDD	P	-	Positive supply voltage (+3.3V) for Pad Ring
73	OVDD	P	-	Positive supply voltage (+3.3V) for Pad Ring
74	MD19	Inout	CMOS, pull-up / 4mA	Data input/output port for SDRAM
75	MD18	Inout	CMOS, pull-up / 4mA	Data input/output port for SDRAM
76	MD17	Inout	CMOS, pull-up / 4mA	Data input/output port for SDRAM
77	MD16	Inout	CMOS, pull-up / 4mA	Data input/output port for SDRAM
78	OVDD	P	-	Positive supply voltage (+3.3V) for Pad Ring
79	OVSS	P	-	Digital ground for Pad Ring
80	MA3	Out	4mA	Address output port for SDRAM
81	MA4	Out	4mA	Address output port for SDRAM
82	MA2	Out	4mA	Address output port for SDRAM
83	MA5	Out	4mA	Address output port for SDRAM
84	OVDD	P	-	Positive supply voltage (+3.3V) for Pad Ring
85	OVSS	P	-	Digital ground for Pad Ring
86	MA1	Out	4mA	Address output port for SDRAM
87	MA6	Out	4mA	Address output port for SDRAM
88	MA0	Out	4mA	Address output port for SDRAM (LSB)
89	MA7	Out	4mA	Address output port for SDRAM
90	OVSS	P	-	Digital ground for Pad Ring
91	IVSS	P	-	Digital ground for Pad Ring
92	CVSS	P	-	Digital ground for Pad Ring for Core
93	OVDD	P	-	Positive supply voltage (+3.3V) for Pad Ring
94	MA10	Out	4mA	Address output port for SDRAM
95	MA8	Out	4mA	Address output port for SDRAM
96	MA11	Out	4mA	Address output port for SDRAM (MSB)
97	MA9	Out	4mA	Address output port for SDRAM
98	OVDD	P	-	Positive supply voltage (+3.3V) for Pad Ring
99	OVSS	P	-	Digital ground for Pad Ring
100	RAS	Out	4mA	Row Address Strobe command output port for SDRAM
101	DQM	Out	4mA	DQM output port for SDRAM. In addition, please connect the CKE terminal of SDRAM to the power supply of SDRAM
102	CAS	Out	4mA	Column Address Strobe command output port for SDRAM
103	MCLK	Out	4mA	Clock output port for SDRAM (54MHz)
104	WE	Out	4mA	Write Enable output port for SDRAM
105	TEST3	In	CMOS	Test purpose only (must be connected to ground)
106	TEST4	In	CMOS	Test purpose only (must be connected to ground)
107	OVSS	P	-	Digital ground for Pad Ring
108	OVDD	P	-	Positive supply voltage (+3.3V) for Pad Ring
109	CVDD	P	-	Digital positive supply voltage (+2.5V) for core
110	MD7	Inout	CMOS, pull-up / 4mA	Data input/output port for SDRAM
111	MD8	Inout	CMOS, pull-up / 4mA	Data input/output port for SDRAM
112	MD6	Inout	CMOS, pull-up / 4mA	Data input/output port for SDRAM
113	MD9	Inout	CMOS, pull-up / 4mA	Data input/output port for SDRAM
114	OVDD	P	-	Positive supply voltage (+3.3V) for Pad Ring
115	OVSS	P	-	Digital ground for Pad Ring
116	MD5	Inout	CMOS, pull-up / 4mA	Data input/output port for SDRAM
117	MD10	Inout	CMOS, pull-up / 4mA	Data input/output port for SDRAM
118	MD4	Inout	CMOS, pull-up / 4mA	Data input/output port for SDRAM
119	MD11	Inout	CMOS, pull-up / 4mA	Data input/output port for SDRAM
120	OVDD	P	-	Positive supply voltage (+3.3V) for Pad Ring
121	OVSS	P	-	Digital ground for Pad Ring
122	MD3	Inout	CMOS, pull-up / 4mA	Data input/output port for SDRAM
123	MD12	Inout	CMOS, pull-up / 4mA	Data input/output port for SDRAM
124	MD2	Inout	CMOS, pull-up / 4mA	Data input/output port for SDRAM
125	MD13	Inout	CMOS, pull-up / 4mA	Data input/output port for SDRAM
126	OVSS	P	-	Digital ground for Pad Ring
127	CVSS	P	-	Digital ground for core
128	OVDD	P	-	Positive supply voltage (+3.3V) for Pad Ring
129	MD1	Inout	CMOS, pull-up / 4mA	Data input/output port for SDRAM
130	MD14	Inout	CMOS, pull-up / 4mA	Data input/output port for SDRAM
131	MD0	Inout	CMOS, pull-up / 4mA	Data input/output port for SDRAM
132	MD15	Inout	CMOS, pull-up / 4mA	Data input/output port for SDRAM
133	SLV	In	CMOS	Slave address selection input for I2C. Slave address is set up to 0x72 when SLV is “0”, 0x70 when “1”.
134	RFFO	Out	2mA	MPEG flag (Repeat First Field) output port. If not used, leave open.
135	SDA	Inout	Schmitt, 3.3V / 4mA	Data input/output of MPU interface
136	SCL	In	Schmitt, 3.3V	Clock input of MPU interface
137	SRN	In	Schmitt	System reset input(negative)
138	OVSS	P	-	Digital ground for Pad Ring
139	CVDD	P	-	Digital positive supply voltage (+2.5V) for core
140	PLL_VDD	P	-	Digital positive supply voltage (+2.5V) for PLL
141	VPDX	In	CMOS	Must be connected to ground
142	TEST6	In	CMOS	Test purpose only (must be connected to ground)
143	PLL_GND	P	-	Ground for PLL
144	IVDD	P	-	Positive supply voltage (+3.3V) for Pad Ring

Note: *1 P10 and P11 should be connected to GND at the time of 8bit input.
*2 PO0 and PO1 should connected to GND at the time of 8bit input.
*3 Although the same bidirectional buffer as PO is used in order to unite PO and timing at the time of PO input, it is always fixed as an input.
*4 The initial-setting value or the initial state in a reset period and after reset release.

IC64 : HY57V161610ET-7

1Mx16 Synchronous DRAM

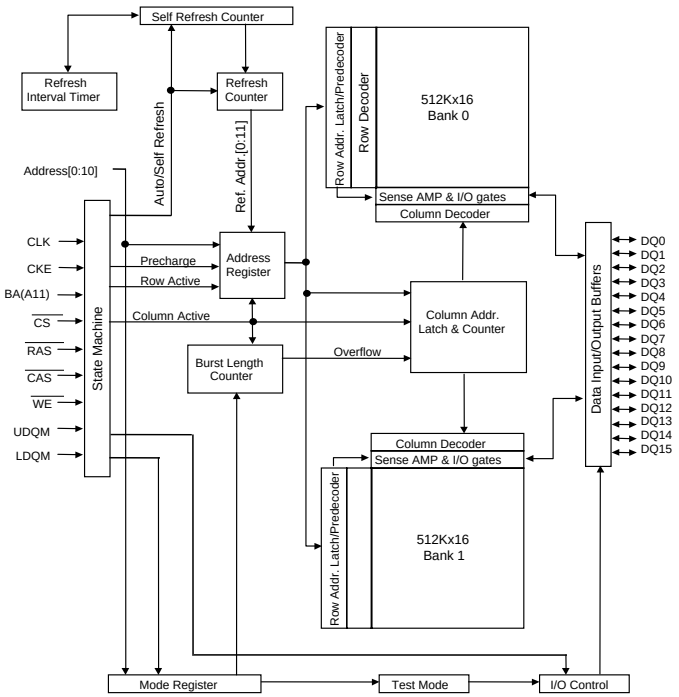

PIN CONFIGURATION

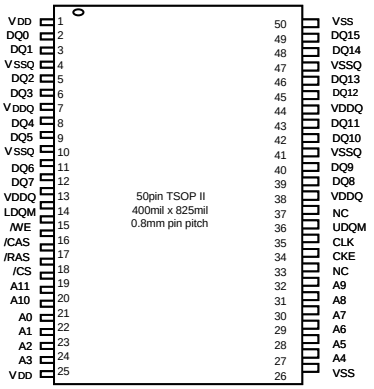

PIN DESCRIPTION

PIN	PIN NAME	DESCRIPTION
CLK	Clock	The system clock input. All other inputs are referenced to the SDRAM on the rising edge of CLK.
CKE	Clock Enable	Controls internal clock signal and when deactivated, the SDRAM will be one of the states among power down, suspend or self refresh.
$\overline{CS}$	Chip Select	Command input enable or mask except CLK, CKE and DQM
BA	Bank Address	Select either one of banks during both $\overline{RAS}$ and $\overline{CAS}$ activity.
A0 ~ A10	Address	Row Address : RA0 ~ RA10, Column Address : CA0 ~ CA7 Auto-precharge flag : A10
$\overline{RAS}$, $\overline{CAS}$, $\overline{WE}$	Row Address Strobe, Column Address Strobe, Write Enable	$\overline{RAS}$, $\overline{CAS}$ and $\overline{WE}$ define the operation. Refer function truth table for details
LDQM, UDQM	Data Input/Output Mask	DQM control output buffer in read mode and mask input data in write mode
DQ0 ~ DQ15	Data Input/Output	Multiplexed data input / output pin
VDD/VSS	Power Supply/Ground	Power supply for internal circuit and input buffer
VDDQ/VSSQ	Data Output Power/Ground	Power supply for DQ
NC	No Connection	No connection

IC65 : TC74VCX541FT
IC66 : TC74VCX541FT
IC67 : TC74VCX541FT
IC68 : TC74VCX541FT
IC69 : TC74VCX541FT
IC70 : TC74VCX541FT

Pin Assignment (top view)

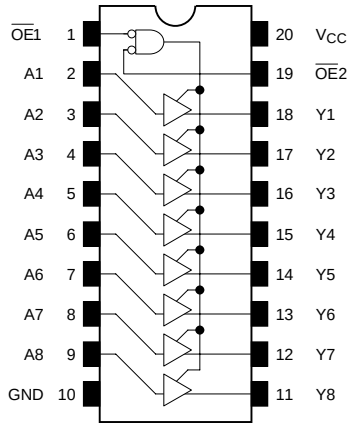

IEC Logic Symbol

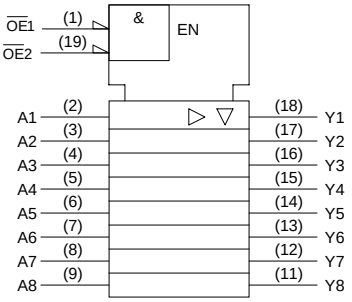

Truth Table

Inputs			Outputs
$\overline{OE1}$	$\overline{OE2}$	An	
H	X	X	Z
X	H	X	Z
L	L	H	H
L	L	L	L

X: Don’t care

Z: High impedance

IC71 : NJM2595MTE1
IC72 : NJM2595MTE1
IC73 : NJM2595MTE1
IC81 : NJM2595MTE1

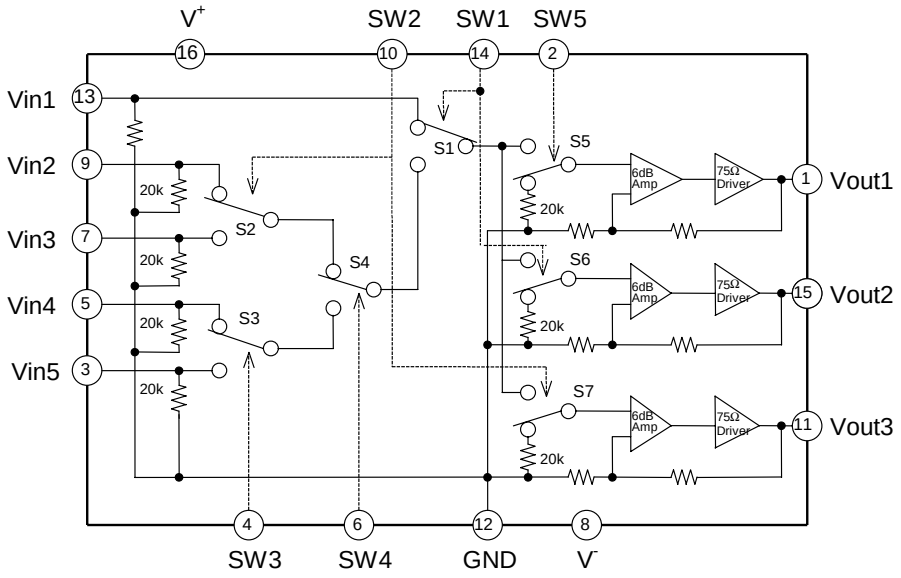

■ **Control Signal vs. Output Signal (L=V_{CL},H=V_{CH}, X=L or H)**

SW1	SW2	SW3	SW4	SW5	Vout1	Vout2	Vout3
L	H	X	X	H	Vin1	MUTE	Vin1
	L			H	Vin1	MUTE	MUTE
	H			L	MUTE	MUTE	Vin1
H	L	X	L	H	Vin2	Vin2	MUTE
				L	MUTE	Vin2	MUTE
H	H	X	L	H	Vin3	Vin3	Vin3
				L	MUTE	Vin3	Vin3
H	H	L	H	H	Vin4	Vin4	Vin4
	H			L	MUTE	Vin4	Vin4
	L			H	Vin4	Vin4	MUTE
	L			L	MUTE	Vin4	MUTE
H	H	H	H	H	Vin5	Vin5	Vin5
	H			L	MUTE	Vin5	Vin5
	L			H	Vin5	Vin5	MUTE
	L			L	MUTE	Vin5	MUTE
L	L	X	X	L	MUTE	MUTE	MUTE

IC74 : NJM2535D

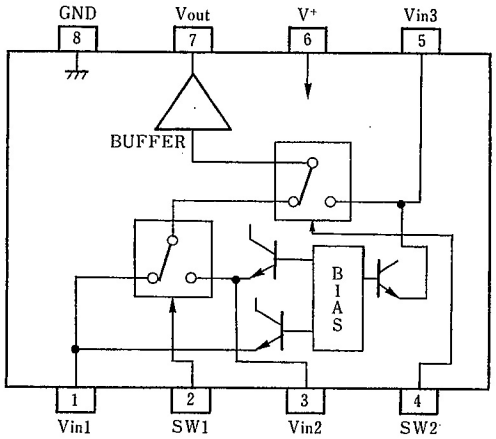

PIN FUNCTION
1 : Vin1
2 : SW1
3 : Vin2
4 : SW2
5 : Vin3
6 : V+
7 : V_{OUT}
8 : GND

SW1	SW2	OUTPUT SIGNAL
L	L	$V_{IN}1$
H	L	$V_{IN}2$
L/H	H	$V_{IN}3$

IC75 : NJM2264D

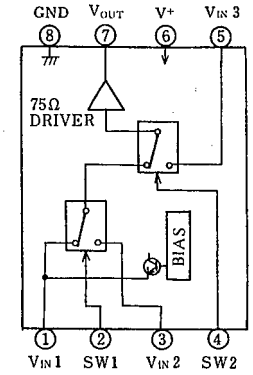

SW 1	SW 2	OUTPUT SIGNAL
L	L	V_{IN} 1
H	L	V_{IN} 2
L/H	H	V_{IN} 3

IC76 : NJM2244D
IC77 : NJM2244D
IC82 : NJM2244D

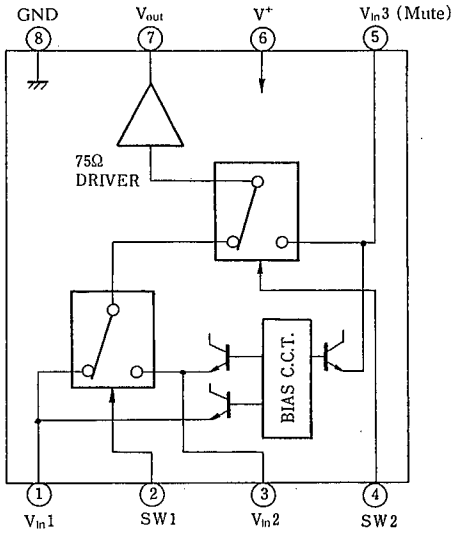

SW 1	SW 2	OUTPUT SIGNAL
L	L	V_{IN} 1
H	L	V_{IN} 2
L/H	H	V_{IN} 3

note): Input clamp voltage is about 2/5 of supply voltage.

IC78 : LC747828A13

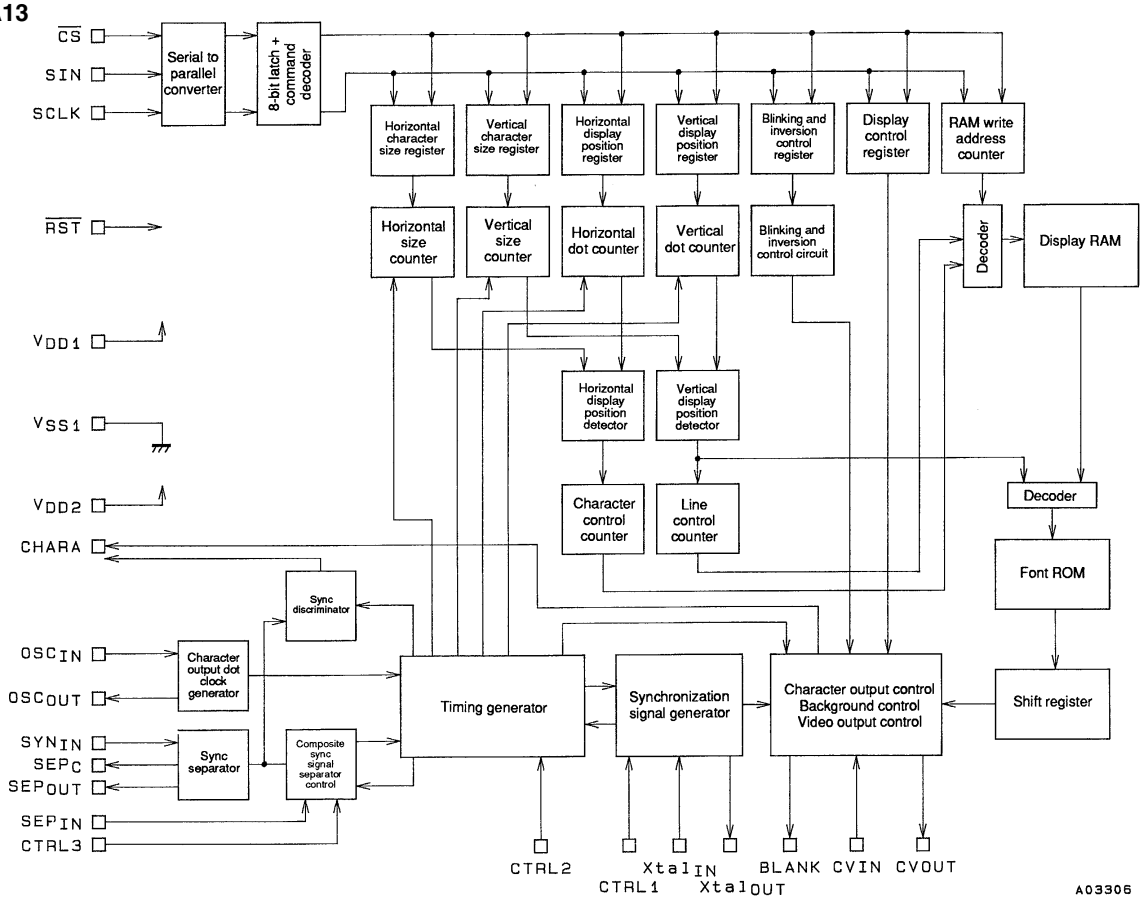

Pin No.	Symbol	Function	Description
1	$V_{SS}1$	Ground	Ground connection (digital system ground)
2	$Xtal_{IN}$	Crystal oscillator connection	Used to connect the crystal oscillator and capacitor used to generate the internal synchronization signal, or to input an external clock (2fsc or 4fsc).
3	$Xtal_{OUT}$		
4	CTRL1	Crystal oscillator input switching	Switches between external clock input mode and crystal oscillator mode. Low = crystal oscillator mode, high = external clock mode
5	BLANK	Blanking output	Outputs the blank signal (the OR of the character and border signals). (Outputs a composite sync signal when MOD0 is high.) Outputs the crystal oscillator clock during reset (when the $\overline{RST}$ pin is low), but can be set up to not output this signal by microprocessor command.
6	OSC_{IN}	LC oscillator connection	Connections for the coil and capacitor that form the oscillator that generates the character output dot clock.
7	OSC_{OUT}		
8	CHARA	Character output	Outputs the character signal. (Functions as the external synchronization signal discrimination signal output pin when MOD0 is high, and outputs the state of the judgment as to whether the external synchronization signal is present or not. Outputs a high level when the synchronization signal is present.) Outputs the dot clock (LC oscillator) during reset, but can be set up to not output this signal by microprocessor command.
9	CS	Enable input	Serial data input enable input. Serial data input is enabled when low. A pull-up resistor is built in (hysteresis input).
10	SCLK	Clock input	Serial data input clock input. A pull-up resistor is built in (hysteresis input).
11	SIN	Data input	Serial data input. A pull-up resistor is built in (hysteresis input).
12	$V_{DD}2$	Power supply	Composite video signal level adjustment power supply pin (analog system power supply).
13	CV_{OUT}	Video signal output	Composite video signal output
14	NC		Must be either connected to ground or left open.
15	CV_{IN}	Video signal input	Composite video signal input
16	$V_{DD}1$	Power supply	Power supply (+5 V: digital system power supply)
17	SYN_{IN}	Sync separator circuit input	Video signal input for the built-in sync separator circuit (Used for either horizontal synchronization signal or composite sync signal input when the built-in sync separator circuit is not used.)
18	SEP_C	Sync separator circuit bias voltage	Built-in sync separator circuit bias voltage monitor pin
19	SEP_{OUT}	Composite sync signal output	Built-in sync separator circuit composite sync signal output. (When MOD1 is high, outputs a high level during internal synchronization and a low level during external synchronization.) (Outputs the SYN_{IN} input signal when the internal sync separator circuit is not used.)
20	SEP_{IN}	Vertical synchronization signal input	Inputs a vertical synchronization signal created by integrating the SEP_{OUT} pin output signal. An integrator must be attached at the SEP_{OUT} pin. This pin must be tied to $V_{DD}1$ if unused.
21	CTRL2	NTSC/PAL-M switching input	The setting indicated by this pin takes priority in switching between the NTSC, PAL, PAL-M and PAL-N formats. A low level selects NTSC after a reset. The microprocessor command NTSC, PAL, PAL-M, or PAL-N setting is valid. High = PAL-M format.
22	CTRL3	SEP_{IN} input control	Controls whether or not the $\overline{VSYNC}$ signal is input to the SEP_{IN} input. Low = $\overline{VSYNC}$ input, high = $\overline{VSYNC}$ not input.
23	$\overline{RST}$	Reset input	System reset input. A pull-up resistor is built in (hysteresis input).
24	$V_{DD}1$	Power supply (+5 V)	Power supply (+5 V: digital system power supply)

IC81 : NJU3430F

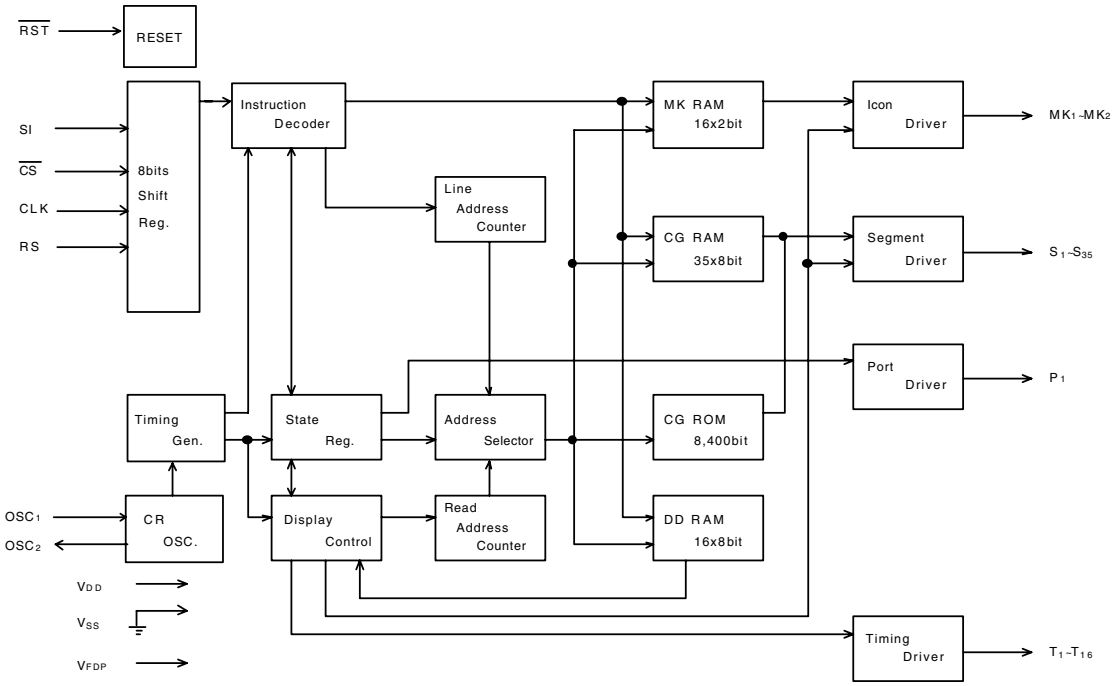

No.	SYMBOL	I/O	F U N C T I O N
57	VDD	-	Power Source : VDD=+3.0 to 5.5V
49	VSS	-	GND : VSS=0V
48	VFDP	-	VFD Driving Power Sourse VDD-20V to VDD-45V
50	OSC1	I	CR Oscillation Terminal External R and C connect to these terminals. (Target fOSC=360kHz)
51	OSC2	O	
54	CLK	I	Serial Clock Input Terminal The serial data input synchronizing the rise edge of this terminal.
53	$\overline{CS}$	I	Chip Select Terminal When the CS terminal is "H" the serial data input is not available.
55	SI	I	Serial Data Input Terminal The data input is MSB first.
56	RS	I	Register Selection Signal Input Terminal RS="0" : Instruction Register RS="1" : Data Register
52	$\overline{RST}$	I	Reset Terminal RST="L" : Reset -Each Address : (00)H -Each RAM Data : Unfixed -Display Digits : 16-digit -Contrast Control : 8/16 Dury -All Display Off -All Outputs are "L"
61 to 64, 1 to 31	S1 to S35	O	Segment Output Terminals (Internal Pull-down Resistance)
32 to 47	T1 to T16	O	Timing Output Terminals (Internal Pull-down Resistance)
60 59	MK1 MK2	O	Icon Output Terminals (Internal Pull-down Resistance)
58	P1	O	Output Port Terminal This terminal is suitable for LED.

IC91 : NJM2584M
IC92 : NJM2584M
IC93 : NJM2584M
IC96 : NJM2584M (SR8001 only)
IC97 : NJM2584M (SR8001 only)
IC98 : NJM2584M (SR8001 only)

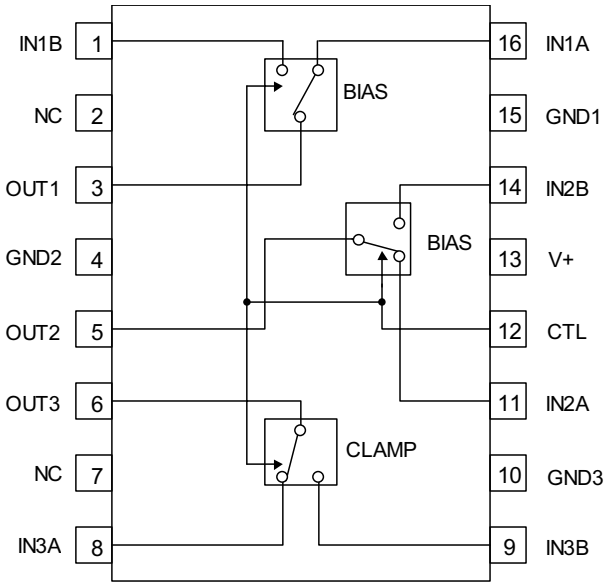

PIN	MODE	NOTES
Control	H	B channel output
	L	A channel output
	OPEN	A channel output

IC94 : NJM2586AM
IC99 : NJM2586AM (SR8001 only)

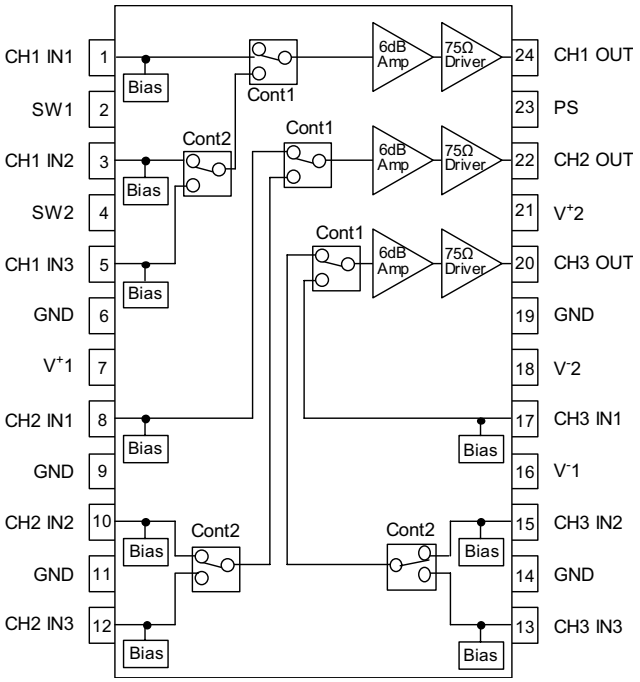

PARAMETER	STATUS	NOTE
PS	H	Power Save: OFF
	L	Power Save: ON
	OPEN	Power Save: ON

PARAMETER	STATUS		NOTE
	SW1	SW2	
SW1, SW2I	L, OPEN	X	IN1 (X=don't care)
	H	L, OPEN	IN2
	H	H	IN3

IC92 : ST3232ECWR

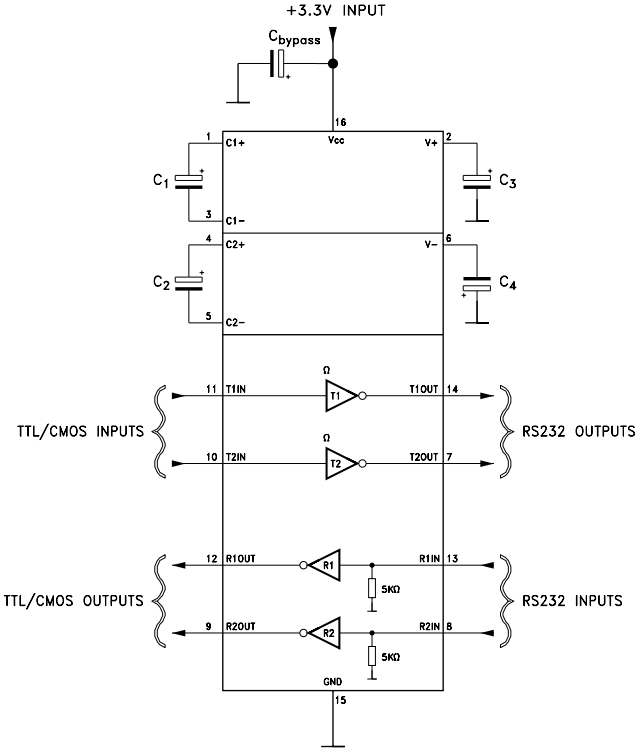

PIN DESCRIPTION

PIN N°	SYMBOL	NAME AND FUNCTION
1	C_1+	Positive Terminal for the first Charge Pump Capacitor
2	V+	Doubled Voltage Terminal
3	C_1-	Negative Terminal for the first Charge Pump Capacitor
4	C_2+	Positive Terminal for the second Charge Pump Capacitor
5	C_2-	Negative Terminal for the second Charge Pump Capacitor
6	V-	Inverted Voltage Terminal
7	$T2_{OUT}$	Second Transmitter Output Voltage
8	$R2_{IN}$	Second Receiver Input Voltage
9	$R2_{OUT}$	Second Receiver Output Voltage
10	$T2_{IN}$	Second Transmitter Input Voltage
11	$T1_{IN}$	First Transmitter Input Voltage
12	$R1_{OUT}$	First Receiver Output Voltage
13	$R1_{IN}$	First Receiver Input Voltage
14	$T1_{OUT}$	First Transmitter Output Voltage
15	GND	Ground
16	V_{CC}	Supply Voltage

13. ELECTRICAL PARTS LIST

PARTS INFORMATION

RESISTORS

1) 00MGD05 × × × 140, Carbon film fixed resistor, ±5% 1/4W
2) 00MGD05 × × × 160, Carbon film fixed resistor, ±5% 1/6W

① ——— Resistance value

Examples ;

① Resistance value

0.1Ω 001	10Ω 100	1kΩ 102	100kΩ 104
0.5Ω 005	18Ω 180	2.7kΩ 272	680kΩ 684
1Ω 010	100Ω 101	10kΩ 103	1MΩ 105
6.8Ω 068	390Ω 391	22kΩ 223	4.7MΩ 475

Note : Please distinguish 1/4W from 1/6W by the shape of parts used actually.

CAPACITORS

CERAMIC CAP.

3) 00MDD1 × × × × 370, Ceramic capacitor
Disc type
Temp.coeff.P350 ～ N1000, 50V

② Tolerance
③ Capacity value

Examples ;

② Tolerance (Capacity deviation)

±0.25pF.....0
±0.5pF.....1
±5%.....5

✻ Tolerance of COMMON PARTS handled here are as follows :

0.5pF ～ 5pF .... ±0.25pF
6pF ～ 10pF .... ±0.5pF
12pF ～ 560pF .... ±5%

③ Capacity value

0.5pF 005	3pF 030	100pF 101
1pF 010	10pF 100	220pF 221
1.5pF 015	47pF 470	560pF 561

CERAMIC CAP.

4) 00MDK16 × × × 300, High dielectric constant ceramic capacitor
Disc type
Temp.chara. 2B4, 50V

④ Capacity value

Examples ;

④ Capacity value

100pF 101	1000pF 102	10000pF 103
470pF 471	2200pF 222	

ELECTROLY CAP. (⧺)

5) 00MEA × × × × × × 10, Electrolytic capacitor
One-way lead type, Tolerance ±20%

⑤ Capacity value
⑥ Working voltage

Examples ;

⑤ Capacity value

0.1μF 104	4.7μF 475	100μF ... 107
0.33μF 334	10μF 106	330μF ... 337
1μF 105	22μF 226	1100μF ... 118
		2200μF ... 228

⑥ Working voltage

6.3V 006	25V 025
10V 010	35V 035
16V 016	50V 050

FILM CAP. (⧺)

6) 00MDF15 × × × 350 → Plastic film capacitor
00MDF15 × × × 310 One-way type, Mylar ±5% 50V
00MDF16 × × × 310 → Plastic film capacitor
One-way type, Mylar ±10% 50V

⑦ Capacity value

Examples ;

⑦ Capacity value

0.001μF (1000pF) 102	0.1μF 104
0.0018μF 182	0.56μF 564
0.01μF 103	1μF 105
0.015μF 153	

NOTE ON SAFETY FOR FUSIBLE RESISTOR :

The suppliers and their type numbers of fusible resistors are as follows;

1. KOA Corporation

Part No. (MJI)	Type No. (KOA)	Description
00MNH05 × × × 140	→ RF25S × × × × ΩJ	(±5% 1/4W)
00MNH05 × × × 120	→ RF50S × × × × ΩJ	(±5% 1/2W)
00MNH85 × × × 110	→ RF73B2A × × × × ΩJ	(±5% 1/10W)
00MNH95 × × × 140	→ RF73B2E × × × × ΩJ	(±5% 1/4W)

✻ Resistance value — Resistance value (0.1 – 10kΩ)

2. Matsushita Electronic Components Co., Ltd

Part No. (MJI)	Type No. (MEC)	Description
00MNF05 × × × 140	→ ERD-2FCJ × × ×	(±5% 1/4W)
00MRF05 × × × 140		
00MNF02 × × × 140	→ ERD-2FCG × × ×	(±2% 1/4W)
00MRF02 × × × 140		

✻ Resistance value — ✻ Resistance value

Examples ;

＊ Resistance value

0.1Ω 001	10Ω 100	1kΩ 102	100kΩ 104
0.5Ω 005	18Ω 180	2.7kΩ 272	680kΩ 684
1Ω 010	100Ω 101	10kΩ 103	1MΩ 105
6.8Ω 068	390Ω 391	22kΩ 223	4.7MΩ 475

ABBREVIATION AND MARKS

ANT.	: ANTENNA	BATT.	: BATTERY
CAP.	: CAPACITOR	CER.	: CERAMIC
CONN.	: CONNECTING	DIG.	: DIGITAL
HP	: HEADPHONE	MIC.	: MICROPHONE
μ-PRO	: MICROPROCESSOR	REC.	: RECORDING
RES.	: RESISTOR	SPK	: SPEAKER
SW	: SWITCH	TRANSF.	: TRANSFORMER
TRIM.	: TRIMMING	TRS.	: TRAMSISTOR
VAR.	: VARIABLE	X'TAL	: CRYSTAL

NOTE ON FUSE :

Regarding to all parts of parts code **00MFS20xxx2xx,** replace only with Wickmann-Werke GmbH, Type 372 non glass type fuse.

NOTE ON SAFETY :

Symbol ⚠ Fire or electrical shock hazard. Only original parts should be used to replaced any part marked with symbol ⚠. Any other component substitution (other than original type), may increase risk of fire or electrical shock hazard.

安全上の注意：

⚠がついている部品は、安全上重要な部品です。必ず指定されている部品番号の部品を使用して下さい。

P.W.B. NAME	POS. NO.	VERS. COLOR	PART NO. (FOR EUR)	PART NO. (MZ)	PART NAME	DESCRIPTION	
					7.1CH INPUT PWB (CUP11869Z-6)		
7.1IN	BN26		nsp	nsp	CORD	WIRE ASSY	CWB1B915080EN
7.1IN	C225		nsp	nsp	CER. CAP.	470PF 50V KB	CCKT1H471KB
7.1IN	C226		nsp	nsp	CER. CAP.	470PF 50V KB	CCKT1H471KB
7.1IN	C227		nsp	nsp	CER. CAP.	470PF 50V KB	CCKT1H471KB
7.1IN	C228		nsp	nsp	CER. CAP.	470PF 50V KB	CCKT1H471KB
7.1IN	C229		nsp	nsp	CER. CAP.	470PF 50V KB	CCKT1H471KB
7.1IN	C230		nsp	nsp	CER. CAP.	470PF 50V KB	CCKT1H471KB
7.1IN	C231		nsp	nsp	CER. CAP.	470PF 50V KB	CCKT1H471KB
7.1IN	C232		nsp	nsp	CER. CAP.	470PF 50V KB	CCKT1H471KB
7.1IN	JK25		90M-YT004350R	90M-YT004350R	TERMINAL	4P WH/BL/RD/GY RCA-401DAG-16	CJJ4P055Z
7.1IN	JK26		90M-YT004340R	90M-YT004340R	TERMINAL	4P BRW/GN/TAN/PU RCA-401DAG-28	CJJ4P054Z
7.1IN	R225		nsp	nsp	RES.	100 OHM 1/5W J	CRD20TJ101T
7.1IN	R226		nsp	nsp	RES.	100 OHM 1/5W J	CRD20TJ101T
7.1IN	R227		nsp	nsp	RES.	100 OHM 1/5W J	CRD20TJ101T
7.1IN	R228		nsp	nsp	RES.	100 OHM 1/5W J	CRD20TJ101T
7.1IN	R229		nsp	nsp	RES.	100 OHM 1/5W J	CRD20TJ101T
7.1IN	R230		nsp	nsp	RES.	100 OHM 1/5W J	CRD20TJ101T
7.1IN	R231		nsp	nsp	RES.	100 OHM 1/5W J	CRD20TJ101T
7.1IN	R232		nsp	nsp	RES.	100 OHM 1/5W J	CRD20TJ101T
					7.1 CH PREOUT PWB (CUP11874Z-4)		
7.1PRE	BN22		nsp	nsp	CORD	WIRE ASSY	CWB1B915250EN
7.1PRE	C170		nsp	nsp	CER. CAP.	470PF 50V KB	CCKT1H471KB
7.1PRE	C171		nsp	nsp	CER. CAP.	470PF 50V KB	CCKT1H471KB
7.1PRE	C172		nsp	nsp	CER. CAP.	470PF 50V KB	CCKT1H471KB
7.1PRE	C173		nsp	nsp	CER. CAP.	470PF 50V KB	CCKT1H471KB
7.1PRE	C174		nsp	nsp	CER. CAP.	470PF 50V KB	CCKT1H471KB
7.1PRE	C175		nsp	nsp	CER. CAP.	470PF 50V KB	CCKT1H471KB
7.1PRE	C176		nsp	nsp	CER. CAP.	470PF 50V KB	CCKT1H471KB
7.1PRE	C177		nsp	nsp	CER. CAP.	470PF 50V KB	CCKT1H471KB
7.1PRE	JK60		90M-YT004350R	90M-YT004350R	TERMINAL	4P WH/BL/RD/GY RCA-401DAG-16	CJJ4P055Z
7.1PRE	JK61		90M-YT004340R	90M-YT004340R	TERMINAL	4P BRW/GN/TAN/PU RCA-401DAG-28	CJJ4P054Z
					AMP PWB (CUP11870Z)		
AMP	BN66		nsp	nsp	CORD	WIRE ASSY	CWB1D906050EN
AMP	BN68		nsp	nsp	CORD	WIRE ASSY	CWZSR7001BN68
AMP	C401		nsp	90M-OA000140R	ELECT CAP.	10UF 50V	HCEA1HROA100T
AMP	C402		nsp	90M-OA000140R	ELECT CAP.	10UF 50V	HCEA1HROA100T
AMP	C403		nsp	nsp	CER. CAP.	330PF 50V KB	CCKT1H331KB
AMP	C404		nsp	nsp	CER. CAP.	330PF 50V KB	CCKT1H331KB
AMP	C405		nsp	nsp	CER. CAP.	10PF 50V DC	CCCT1H100DC
AMP	C406		nsp	nsp	CER. CAP.	10PF 50V DC	CCCT1H100DC
AMP	C407		90M-OF100350R	90M-OF100350R	FILM CAP.	2200PF 50V J	HCQI1H222JZT
AMP	C408		90M-OF100350R	90M-OF100350R	FILM CAP.	2200PF 50V J	HCQI1H222JZT
AMP	C409		nsp	90M-OA000130R	ELECT CAP.	22UF 50V	HCEA1HAHS220T
AMP	C410		nsp	90M-OA000130R	ELECT CAP.	22UF 50V	HCEA1HAHS220T
AMP	C411		nsp	00MOA10710020	ELECT CAP.	100UF 100V	CCEA2AH101E
AMP	C412		nsp	00MOA10710020	ELECT CAP.	100UF 100V	CCEA2AH101E
AMP	C413		nsp	00MOA10710020	ELECT CAP.	100UF 100V	CCEA2AH101E
AMP	C414		nsp	00MOA10710020	ELECT CAP.	100UF 100V	CCEA2AH101E
AMP	C419		nsp	90M-OA000120R	ELECT CAP.	100UF 50V	HCEA1HAHS101T
AMP	C420		nsp	90M-OA000120R	ELECT CAP.	100UF 50V	HCEA1HAHS101T
AMP	C421		nsp	00MOA10702520	ELECT CAP.	100UF 25V	CCEA1EH101T
AMP	C422		nsp	00MOA10702520	ELECT CAP.	100UF 25V	CCEA1EH101T
AMP	C501		nsp	90M-OA000140R	ELECT CAP.	10UF 50V	HCEA1HROA100T
AMP	C502		nsp	90M-OA000140R	ELECT CAP.	10UF 50V	HCEA1HROA100T
AMP	C503		nsp	nsp	CER. CAP.	330PF 50V KB	CCKT1H331KB
AMP	C504		nsp	nsp	CER. CAP.	330PF 50V KB	CCKT1H331KB
AMP	C505		nsp	nsp	CER. CAP.	10PF 50V DC	CCCT1H100DC
AMP	C506		nsp	nsp	CER. CAP.	10PF 50V DC	CCCT1H100DC
AMP	C507		90M-OF100350R	90M-OF100350R	FILM CAP.	2200PF 50V J	HCQI1H222JZT
AMP	C508		90M-OF100350R	90M-OF100350R	FILM CAP.	2200PF 50V J	HCQI1H222JZT
AMP	C509		nsp	90M-OA000130R	ELECT CAP.	22UF 50V	HCEA1HAHS220T
AMP	C510		nsp	90M-OA000130R	ELECT CAP.	22UF 50V	HCEA1HAHS220T
AMP	C511		nsp	00MOA10710020	ELECT CAP.	100UF 100V	CCEA2AH101E
AMP	C512		nsp	00MOA10710020	ELECT CAP.	100UF 100V	CCEA2AH101E
AMP	C513		nsp	00MOA10710020	ELECT CAP.	100UF 100V	CCEA2AH101E
AMP	C514		nsp	00MOA10710020	ELECT CAP.	100UF 100V	CCEA2AH101E

NOTE : "nsp" PART IS LISTED FOR REFERENCE ONLY, MARANTZ WILL NOT SUPPLY THESE PARTS.

P.W.B. NAME	POS. NO.	VERS. COLOR	PART NO. (FOR EUR)	PART NO. (MZ)	PART NAME	DESCRIPTION	
AMP	C519		nsp	90M-OA000120R	ELECT CAP.	100UF 50V	HCEA1HAHS101T
AMP	C520		nsp	90M-OA000120R	ELECT CAP.	100UF 50V	HCEA1HAHS101T
AMP	C521		nsp	00MOA10702520	ELECT CAP.	100UF 25V	CCEA1EH101T
AMP	C522		nsp	00MOA10702520	ELECT CAP.	100UF 25V	CCEA1EH101T
AMP	C601		nsp	90M-OA000140R	ELECT CAP.	10UF 50V	HCEA1HROA100T
AMP	C602		nsp	90M-OA000140R	ELECT CAP.	10UF 50V	HCEA1HROA100T
AMP	C603		nsp	nsp	CER. CAP.	330PF 50V KB	CCKT1H331KB
AMP	C604		nsp	nsp	CER. CAP.	330PF 50V KB	CCKT1H331KB
AMP	C605		nsp	nsp	CER. CAP.	10PF 50V DC	CCCT1H100DC
AMP	C606		nsp	nsp	CER. CAP.	10PF 50V DC	CCCT1H100DC
AMP	C607		90M-OF100350R	90M-OF100350R	FILM CAP.	2200PF 50V J	HCQI1H222JZT
AMP	C608		90M-OF100350R	90M-OF100350R	FILM CAP.	2200PF 50V J	HCQI1H222JZT
AMP	C609		nsp	90M-OA000130R	ELECT CAP.	22UF 50V	HCEA1HAHS220T
AMP	C610		nsp	90M-OA000130R	ELECT CAP.	22UF 50V	HCEA1HAHS220T
AMP	C611		nsp	00MOA10710020	ELECT CAP.	100UF 100V	CCEA2AH101E
AMP	C612		nsp	00MOA10710020	ELECT CAP.	100UF 100V	CCEA2AH101E
AMP	C613		nsp	00MOA10710020	ELECT CAP.	100UF 100V	CCEA2AH101E
AMP	C614		nsp	00MOA10710020	ELECT CAP.	100UF 100V	CCEA2AH101E
AMP	C619		nsp	90M-OA000120R	ELECT CAP.	100UF 50V	HCEA1HAHS101T
AMP	C620		nsp	90M-OA000120R	ELECT CAP.	100UF 50V	HCEA1HAHS101T
AMP	C621		nsp	00MOA10702520	ELECT CAP.	100UF 25V	CCEA1EH101T
AMP	C622		nsp	00MOA10702520	ELECT CAP.	100UF 25V	CCEA1EH101T
AMP	C701		nsp	90M-OA000140R	ELECT CAP.	10UF 50V	HCEA1HROA100T
AMP	C703		nsp	nsp	CER. CAP.	330PF 50V KB	CCKT1H331KB
AMP	C705		nsp	nsp	CER. CAP.	10PF 50V DC	CCCT1H100DC
AMP	C707		90M-OF100350R	90M-OF100350R	FILM CAP.	2200PF 50V J	HCQI1H222JZT
AMP	C709		nsp	90M-OA000130R	ELECT CAP.	22UF 50V	HCEA1HAHS220T
AMP	C711		nsp	00MOA10710020	ELECT CAP.	100UF 100V	CCEA2AH101E
AMP	C713		nsp	00MOA10710020	ELECT CAP.	100UF 100V	CCEA2AH101E
AMP	C719		nsp	90M-OA000120R	ELECT CAP.	100UF 50V	HCEA1HAHS101T
AMP	C721		nsp	00MOA10702520	ELECT CAP.	100UF 25V	CCEA1EH101T
AMP	C722		nsp	00MOA10702520	ELECT CAP.	100UF 25V	CCEA1EH101T
AMP	C810		90M-OF100490R	90M-OF100490R	FILM CAP.	0.1UF 250V	KCME2E104JP04T
AMP	C811		90M-OF100490R	90M-OF100490R	FILM CAP.	0.1UF 250V	KCME2E104JP04T
AMP	C812		nsp	nsp	CER. CAP.	0.01UF 50V Z	CCFT1H103ZF
AMP	C813		nsp	00MOA47605020	ELECT CAP.	47UF 50V	CCEA1HH470T
AMP	C814		nsp	00MOA47505020	ELECT CAP.	4.7UF 50V	CCEA1HH4R7T
AMP	C815		nsp	nsp	CER. CAP.	0.01UF 50V Z	CCFT1H103ZF
AMP	C816		nsp	nsp	CER. CAP.	0.01UF 50V Z	CCFT1H103ZF
AMP	CN23		nsp	nsp	CONN.	STRAIGHT 8PIN	CJP08GA19ZY
AMP	CN24		nsp	nsp	CONN.	6P STRAIGHT	CJP06GA19ZY
AMP	CN41		nsp	nsp	CONN.	STRAIGHT, 2PIN	CJP02GA01ZY
AMP	CN42		nsp	nsp	CONN.	STRAIGHT, 2PIN	CJP02GA01ZY
AMP	CN51		nsp	nsp	CONN.	STRAIGHT, 2PIN	CJP02GA01ZY
AMP	CN52		nsp	nsp	CONN.	STRAIGHT, 2PIN	CJP02GA01ZY
AMP	CN61		nsp	nsp	CONN.	STRAIGHT, 2PIN	CJP02GA01ZY
AMP	CN62		nsp	nsp	CONN.	STRAIGHT, 2PIN	CJP02GA01ZY
AMP	CN71		nsp	nsp	CONN.	STRAIGHT, 2PIN	CJP02GA01ZY
AMP	CN73		nsp	nsp	CONN.	A3963WV2-6P	CJP06GA148ZW
AMP	CN81		nsp	nsp	CONN.	2PIN CJP02GA19ZY	CJP02GA19ZY
AMP	CN82		nsp	nsp	CONN.	2PIN CJP02GA19ZY	CJP02GA19ZY
AMP	CN83		nsp	nsp	CONN.	STRAIGHT, 2PIN	CJP02GA01ZY
AMP	CN83		nsp	nsp	CORD	WIRE ASSY	CWZSR7001CN83
AMP	D401		nsp	00MHD20015210	DIODE	1SS133T-77	CVD1SS133MT
AMP	D402		nsp	00MHD20015210	DIODE	1SS133T-77	CVD1SS133MT
AMP	D403		nsp	00MHD20015210	DIODE	1SS133T-77	CVD1SS133MT
AMP	D404		nsp	00MHD20015210	DIODE	1SS133T-77	CVD1SS133MT
AMP	D405		nsp	00MHD20015210	DIODE	1SS133T-77	CVD1SS133MT
AMP	D406		nsp	00MHD20015210	DIODE	1SS133T-77	CVD1SS133MT
AMP	D407		nsp	00MHD20015210	DIODE	1SS133T-77	CVD1SS133MT
AMP	D408		nsp	00MHD20015210	DIODE	1SS133T-77	CVD1SS133MT
AMP	D409		90M-HD302380R	90M-HD302380R	ZENER DIODE	ZJ3.6BT	CVDZJ3.6BT
AMP	D410		90M-HD302380R	90M-HD302380R	ZENER DIODE	ZJ3.6BT	CVDZJ3.6BT
AMP	D411		90M-HD302380R	90M-HD302380R	ZENER DIODE	ZJ3.6BT	CVDZJ3.6BT
AMP	D412		90M-HD302380R	90M-HD302380R	ZENER DIODE	ZJ3.6BT	CVDZJ3.6BT
AMP	D413		nsp	00MHD20015210	DIODE	1SS133T-77	CVD1SS133MT
AMP	D414		nsp	00MHD20015210	DIODE	1SS133T-77	CVD1SS133MT

NOTE : "nsp" PART IS LISTED FOR REFERENCE ONLY, MARANTZ WILL NOT SUPPLY THESE PARTS.

P.W.B. NAME	POS. NO.	VERS. COLOR	PART NO. (FOR EUR)	PART NO. (MZ)	PART NAME	DESCRIPTION	
AMP	D415		nsp	00MHD20015210	DIODE	1SS133T-77	CVD1SS133MT
AMP	D416		nsp	00MHD20015210	DIODE	1SS133T-77	CVD1SS133MT
AMP	D501		nsp	00MHD20015210	DIODE	1SS133T-77	CVD1SS133MT
AMP	D502		nsp	00MHD20015210	DIODE	1SS133T-77	CVD1SS133MT
AMP	D503		nsp	00MHD20015210	DIODE	1SS133T-77	CVD1SS133MT
AMP	D504		nsp	00MHD20015210	DIODE	1SS133T-77	CVD1SS133MT
AMP	D505		nsp	00MHD20015210	DIODE	1SS133T-77	CVD1SS133MT
AMP	D506		nsp	00MHD20015210	DIODE	1SS133T-77	CVD1SS133MT
AMP	D507		nsp	00MHD20015210	DIODE	1SS133T-77	CVD1SS133MT
AMP	D508		nsp	00MHD20015210	DIODE	1SS133T-77	CVD1SS133MT
AMP	D509		90M-HD302380R	90M-HD302380R	ZENER DIODE	ZJ3.6BT	CVDZJ3.6BT
AMP	D510		90M-HD302380R	90M-HD302380R	ZENER DIODE	ZJ3.6BT	CVDZJ3.6BT
AMP	D511		90M-HD302380R	90M-HD302380R	ZENER DIODE	ZJ3.6BT	CVDZJ3.6BT
AMP	D512		90M-HD302380R	90M-HD302380R	ZENER DIODE	ZJ3.6BT	CVDZJ3.6BT
AMP	D513		nsp	00MHD20015210	DIODE	1SS133T-77	CVD1SS133MT
AMP	D514		nsp	00MHD20015210	DIODE	1SS133T-77	CVD1SS133MT
AMP	D515		nsp	00MHD20015210	DIODE	1SS133T-77	CVD1SS133MT
AMP	D516		nsp	00MHD20015210	DIODE	1SS133T-77	CVD1SS133MT
AMP	D601		nsp	00MHD20015210	DIODE	1SS133T-77	CVD1SS133MT
AMP	D602		nsp	00MHD20015210	DIODE	1SS133T-77	CVD1SS133MT
AMP	D603		nsp	00MHD20015210	DIODE	1SS133T-77	CVD1SS133MT
AMP	D604		nsp	00MHD20015210	DIODE	1SS133T-77	CVD1SS133MT
AMP	D605		nsp	00MHD20015210	DIODE	1SS133T-77	CVD1SS133MT
AMP	D606		nsp	00MHD20015210	DIODE	1SS133T-77	CVD1SS133MT
AMP	D607		nsp	00MHD20015210	DIODE	1SS133T-77	CVD1SS133MT
AMP	D608		nsp	00MHD20015210	DIODE	1SS133T-77	CVD1SS133MT
AMP	D609		90M-HD302380R	90M-HD302380R	ZENER DIODE	ZJ3.6BT	CVDZJ3.6BT
AMP	D610		90M-HD302380R	90M-HD302380R	ZENER DIODE	ZJ3.6BT	CVDZJ3.6BT
AMP	D611		90M-HD302380R	90M-HD302380R	ZENER DIODE	ZJ3.6BT	CVDZJ3.6BT
AMP	D612		90M-HD302380R	90M-HD302380R	ZENER DIODE	ZJ3.6BT	CVDZJ3.6BT
AMP	D613		nsp	00MHD20015210	DIODE	1SS133T-77	CVD1SS133MT
AMP	D614		nsp	00MHD20015210	DIODE	1SS133T-77	CVD1SS133MT
AMP	D615		nsp	00MHD20015210	DIODE	1SS133T-77	CVD1SS133MT
AMP	D616		nsp	00MHD20015210	DIODE	1SS133T-77	CVD1SS133MT
AMP	D701		nsp	00MHD20015210	DIODE	1SS133T-77	CVD1SS133MT
AMP	D703		nsp	00MHD20015210	DIODE	1SS133T-77	CVD1SS133MT
AMP	D705		nsp	00MHD20015210	DIODE	1SS133T-77	CVD1SS133MT
AMP	D707		nsp	00MHD20015210	DIODE	1SS133T-77	CVD1SS133MT
AMP	D709		90M-HD302380R	90M-HD302380R	ZENER DIODE	ZJ3.6BT	CVDZJ3.6BT
AMP	D711		90M-HD302380R	90M-HD302380R	ZENER DIODE	ZJ3.6BT	CVDZJ3.6BT
AMP	D713		nsp	00MHD20015210	DIODE	1SS133T-77	CVD1SS133MT
AMP	D715		nsp	00MHD20015210	DIODE	1SS133T-77	CVD1SS133MT
AMP	⚠ D801		90M-HE200250R	90M-HE200250R	DIODE	! GBJ1504	HVDGBJ1504
AMP	D802		nsp	nsp	CORD	SN95/PB5, 0.6	C3A206
AMP	D803		nsp	nsp	CORD	SN95/PB5, 0.6	C3A206
AMP	D804		90M-HD302390R	90M-HD302390R	ZENER DIODE	ZJ3.3BT	CVDZJ3.3BT
AMP	D805		90M-HD302390R	90M-HD302390R	ZENER DIODE	ZJ3.3BT	CVDZJ3.3BT
AMP	D806		90M-HD302390R	90M-HD302390R	ZENER DIODE	ZJ3.3BT	CVDZJ3.3BT
AMP	IC41		00MHC10053090	00MHC10053090	IC	NJM2068DD	HVINJM2068DD
AMP	IC51		00MHC10053090	00MHC10053090	IC	NJM2068DD	HVINJM2068DD
AMP	IC61		00MHC10053090	00MHC10053090	IC	NJM2068DD	HVINJM2068DD
AMP	IC71		00MHC10053090	00MHC10053090	IC	NJM2068DD	HVINJM2068DD
AMP	J101		nsp	nsp	CORD	SN95/PB5, 0.6	C3A206
AMP	J102		nsp	nsp	CORD	SN95/PB5, 0.6	C3A206
AMP	J103		nsp	nsp	CORD	SN95/PB5, 0.6	C3A206
AMP	J104		nsp	nsp	CORD	SN95/PB5, 0.6	C3A206
AMP	J105		nsp	nsp	CORD	SN95/PB5, 0.6	C3A206
AMP	J106		nsp	nsp	CORD	SN95/PB5, 0.6	C3A206
AMP	J107		nsp	nsp	CORD	SN95/PB5, 0.6	C3A206
AMP	J108		nsp	nsp	CORD	SN95/PB5, 0.6	C3A206
AMP	J109		nsp	nsp	CORD	SN95/PB5, 0.6	C3A206
AMP	J110		nsp	nsp	CORD	SN95/PB5, 0.6	C3A206
AMP	J111		nsp	nsp	CORD	SN95/PB5, 0.6	C3A206
AMP	J112		nsp	nsp	CORD	SN95/PB5, 0.6	C3A206
AMP	J113		nsp	nsp	CORD	SN95/PB5, 0.6	C3A206
AMP	J114		nsp	nsp	CORD	SN95/PB5, 0.6	C3A206
AMP	J115		nsp	nsp	CORD	SN95/PB5, 0.6	C3A206

NOTE : "nsp" PART IS LISTED FOR REFERENCE ONLY, MARANTZ WILL NOT SUPPLY THESE PARTS.

P.W.B. NAME	POS. NO.	VERS. COLOR	PART NO. (FOR EUR)	PART NO. (MZ)	PART NAME	DESCRIPTION	
AMP	J116		nsp	nsp	CORD	SN95/PB5, 0.6	C3A206
AMP	J117		nsp	nsp	CORD	SN95/PB5, 0.6	C3A206
AMP	J118		nsp	nsp	CORD	SN95/PB5, 0.6	C3A206
AMP	J119		nsp	nsp	CORD	SN95/PB5, 0.6	C3A206
AMP	J120		nsp	nsp	CORD	SN95/PB5, 0.6	C3A206
AMP	J121		nsp	nsp	CORD	SN95/PB5, 0.6	C3A206
AMP	J122		nsp	nsp	CORD	SN95/PB5, 0.6	C3A206
AMP	J123		nsp	nsp	CORD	SN95/PB5, 0.6	C3A206
AMP	J124		nsp	nsp	CORD	SN95/PB5, 0.6	C3A206
AMP	J125		nsp	nsp	CORD	SN95/PB5, 0.6	C3A206
AMP	J126		nsp	nsp	CORD	SN95/PB5, 0.6	C3A206
AMP	J127		nsp	nsp	CORD	SN95/PB5, 0.6	C3A206
AMP	J128		nsp	nsp	CORD	SN95/PB5, 0.6	C3A206
AMP	J129		nsp	nsp	CORD	SN95/PB5, 0.6	C3A206
AMP	J130		nsp	nsp	CORD	SN95/PB5, 0.6	C3A206
AMP	J132		nsp	nsp	CORD	SN95/PB5, 0.6	C3A206
AMP	J201		nsp	nsp	CORD	SN95/PB5, 0.6	C3A206
AMP	J202		nsp	nsp	CORD	SN95/PB5, 0.6	C3A206
AMP	J203		nsp	nsp	CORD	SN95/PB5, 0.6	C3A206
AMP	J204		nsp	nsp	CORD	SN95/PB5, 0.6	C3A206
AMP	J205		nsp	nsp	CORD	SN95/PB5, 0.6	C3A206
AMP	J206		nsp	nsp	CORD	SN95/PB5, 0.6	C3A206
AMP	J207		nsp	nsp	CORD	SN95/PB5, 0.6	C3A206
AMP	J208		nsp	nsp	CORD	SN95/PB5, 0.6	C3A206
AMP	J209		nsp	nsp	CORD	SN95/PB5, 0.6	C3A206
AMP	J210		nsp	nsp	CORD	SN95/PB5, 0.6	C3A206
AMP	J211		nsp	nsp	CORD	SN95/PB5, 0.6	C3A206
AMP	J212		nsp	nsp	CORD	SN95/PB5, 0.6	C3A206
AMP	J213		nsp	nsp	CORD	SN95/PB5, 0.6	C3A206
AMP	J214		nsp	nsp	CORD	SN95/PB5, 0.6	C3A206
AMP	J215		nsp	nsp	CORD	SN95/PB5, 0.6	C3A206
AMP	J216		nsp	nsp	CORD	SN95/PB5, 0.6	C3A206
AMP	J217		nsp	nsp	CORD	SN95/PB5, 0.6	C3A206
AMP	J218		nsp	nsp	CORD	SN95/PB5, 0.6	C3A206
AMP	J219		nsp	nsp	CORD	SN95/PB5, 0.6	C3A206
AMP	J220		nsp	nsp	CORD	SN95/PB5, 0.6	C3A206
AMP	J221		nsp	nsp	CORD	SN95/PB5, 0.6	C3A206
AMP	J222		nsp	nsp	CORD	SN95/PB5, 0.6	C3A206
AMP	J223		nsp	nsp	CORD	SN95/PB5, 0.6	C3A206
AMP	J224		nsp	nsp	CORD	SN95/PB5, 0.6	C3A206
AMP	J225		nsp	nsp	CORD	SN95/PB5, 0.6	C3A206
AMP	J226		nsp	nsp	CORD	SN95/PB5, 0.6	C3A206
AMP	J227		nsp	nsp	CORD	SN95/PB5, 0.6	C3A206
AMP	J228		nsp	nsp	CORD	SN95/PB5, 0.6	C3A206
AMP	J229		nsp	nsp	CORD	SN95/PB5, 0.6	C3A206
AMP	J230		nsp	nsp	CORD	SN95/PB5, 0.6	C3A206
AMP	J301		nsp	nsp	CORD	SN95/PB5, 0.6	C3A206
AMP	J302		nsp	nsp	CORD	SN95/PB5, 0.6	C3A206
AMP	J303		nsp	nsp	CORD	SN95/PB5, 0.6	C3A206
AMP	J304		nsp	nsp	CORD	SN95/PB5, 0.6	C3A206
AMP	J305		nsp	nsp	CORD	SN95/PB5, 0.6	C3A206
AMP	J306		nsp	nsp	CORD	SN95/PB5, 0.6	C3A206
AMP	J307		nsp	nsp	CORD	SN95/PB5, 0.6	C3A206
AMP	J308		nsp	nsp	CORD	SN95/PB5, 0.6	C3A206
AMP	J309		nsp	nsp	CORD	SN95/PB5, 0.6	C3A206
AMP	J310		nsp	nsp	CORD	SN95/PB5, 0.6	C3A206
AMP	J311		nsp	nsp	CORD	SN95/PB5, 0.6	C3A206
AMP	J312		nsp	nsp	CORD	SN95/PB5, 0.6	C3A206
AMP	J313		nsp	nsp	CORD	SN95/PB5, 0.6	C3A206
AMP	J314		nsp	nsp	CORD	SN95/PB5, 0.6	C3A206
AMP	J315		nsp	nsp	CORD	SN95/PB5, 0.6	C3A206
AMP	J316		nsp	nsp	CORD	SN95/PB5, 0.6	C3A206
AMP	J317		nsp	nsp	CORD	SN95/PB5, 0.6	C3A206
AMP	J318		nsp	nsp	CORD	SN95/PB5, 0.6	C3A206
AMP	J319		nsp	nsp	CORD	SN95/PB5, 0.6	C3A206
AMP	J320		nsp	nsp	CORD	SN95/PB5, 0.6	C3A206
AMP	J321		nsp	nsp	CORD	SN95/PB5, 0.6	C3A206

NOTE : "nsp" PART IS LISTED FOR REFERENCE ONLY, MARANTZ WILL NOT SUPPLY THESE PARTS.

P.W.B. NAME	POS. NO.	VERS. COLOR	PART NO. (FOR EUR)	PART NO. (MZ)	PART NAME	DESCRIPTION	
AMP	J322		nsp	nsp	CORD	SN95/PB5, 0.6	C3A206
AMP	J323		nsp	nsp	CORD	SN95/PB5, 0.6	C3A206
AMP	J324		nsp	nsp	CORD	SN95/PB5, 0.6	C3A206
AMP	J325		nsp	nsp	CORD	SN95/PB5, 0.6	C3A206
AMP	J326		nsp	nsp	CORD	SN95/PB5, 0.6	C3A206
AMP	J327		nsp	nsp	CORD	SN95/PB5, 0.6	C3A206
AMP	J328		nsp	nsp	CORD	SN95/PB5, 0.6	C3A206
AMP	J329		nsp	nsp	CORD	SN95/PB5, 0.6	C3A206
AMP	J330		nsp	nsp	CORD	SN95/PB5, 0.6	C3A206
AMP	J401		nsp	nsp	CORD	SN95/PB5, 0.6	C3A206
AMP	J402		nsp	nsp	CORD	SN95/PB5, 0.6	C3A206
AMP	J403		nsp	nsp	CORD	SN95/PB5, 0.6	C3A206
AMP	J404		nsp	nsp	CORD	SN95/PB5, 0.6	C3A206
AMP	J405		nsp	nsp	CORD	SN95/PB5, 0.6	C3A206
AMP	J406		nsp	nsp	CORD	SN95/PB5, 0.6	C3A206
AMP	J407		nsp	nsp	CORD	SN95/PB5, 0.6	C3A206
AMP	J408		nsp	nsp	CORD	SN95/PB5, 0.6	C3A206
AMP	J409		nsp	nsp	CORD	SN95/PB5, 0.6	C3A206
AMP	J410		nsp	nsp	CORD	SN95/PB5, 0.6	C3A206
AMP	J411		nsp	nsp	CORD	SN95/PB5, 0.6	C3A206
AMP	J412		nsp	nsp	CORD	SN95/PB5, 0.6	C3A206
AMP	J413		nsp	nsp	CORD	SN95/PB5, 0.6	C3A206
AMP	J414		nsp	nsp	CORD	SN95/PB5, 0.6	C3A206
AMP	J415		nsp	nsp	CORD	SN95/PB5, 0.6	C3A206
AMP	J416		nsp	nsp	CORD	SN95/PB5, 0.6	C3A206
AMP	J417		nsp	nsp	CORD	SN95/PB5, 0.6	C3A206
AMP	J418		nsp	nsp	CORD	SN95/PB5, 0.6	C3A206
AMP	J419		nsp	nsp	CORD	SN95/PB5, 0.6	C3A206
AMP	J420		nsp	nsp	CORD	SN95/PB5, 0.6	C3A206
AMP	J421		nsp	nsp	CORD	SN95/PB5, 0.6	C3A206
AMP	J422		nsp	nsp	CORD	SN95/PB5, 0.6	C3A206
AMP	J423		nsp	nsp	CORD	SN95/PB5, 0.6	C3A206
AMP	J424		nsp	nsp	CORD	SN95/PB5, 0.6	C3A206
AMP	J425		nsp	nsp	CORD	SN95/PB5, 0.6	C3A206
AMP	J426		nsp	nsp	CORD	SN95/PB5, 0.6	C3A206
AMP	J427		nsp	nsp	CORD	SN95/PB5, 0.6	C3A206
AMP	J428		nsp	nsp	CORD	SN95/PB5, 0.6	C3A206
AMP	J429		nsp	nsp	CORD	SN95/PB5, 0.6	C3A206
AMP	J501		nsp	nsp	CORD	SN95/PB5, 0.6	C3A206
AMP	J502		nsp	nsp	CORD	SN95/PB5, 0.6	C3A206
AMP	J503		nsp	nsp	CORD	SN95/PB5, 0.6	C3A206
AMP	J504		nsp	nsp	CORD	SN95/PB5, 0.6	C3A206
AMP	J505		nsp	nsp	CORD	SN95/PB5, 0.6	C3A206
AMP	J506		nsp	nsp	CORD	SN95/PB5, 0.6	C3A206
AMP	J507		nsp	nsp	CORD	SN95/PB5, 0.6	C3A206
AMP	J508		nsp	nsp	CORD	SN95/PB5, 0.6	C3A206
AMP	J509		nsp	nsp	CORD	SN95/PB5, 0.6	C3A206
AMP	J510		nsp	nsp	CORD	SN95/PB5, 0.6	C3A206
AMP	J511		nsp	nsp	CORD	SN95/PB5, 0.6	C3A206
AMP	J512		nsp	nsp	CORD	SN95/PB5, 0.6	C3A206
AMP	J513		nsp	nsp	CORD	SN95/PB5, 0.6	C3A206
AMP	J514		nsp	nsp	CORD	SN95/PB5, 0.6	C3A206
AMP	J515		nsp	nsp	CORD	SN95/PB5, 0.6	C3A206
AMP	J516		nsp	nsp	CORD	SN95/PB5, 0.6	C3A206
AMP	J517		nsp	nsp	CORD	SN95/PB5, 0.6	C3A206
AMP	J518		nsp	nsp	CORD	SN95/PB5, 0.6	C3A206
AMP	J519		nsp	nsp	CORD	SN95/PB5, 0.6	C3A206
AMP	J520		nsp	nsp	CORD	SN95/PB5, 0.6	C3A206
AMP	J521		nsp	nsp	CORD	SN95/PB5, 0.6	C3A206
AMP	J522		nsp	nsp	CORD	SN95/PB5, 0.6	C3A206
AMP	J523		nsp	nsp	CORD	SN95/PB5, 0.6	C3A206
AMP	J524		nsp	nsp	CORD	SN95/PB5, 0.6	C3A206
AMP	J525		nsp	nsp	CORD	SN95/PB5, 0.6	C3A206
AMP	J526		nsp	nsp	CORD	SN95/PB5, 0.6	C3A206
AMP	J527		nsp	nsp	CORD	SN95/PB5, 0.6	C3A206
AMP	J528		nsp	nsp	CORD	SN95/PB5, 0.6	C3A206
AMP	J529		nsp	nsp	CORD	SN95/PB5, 0.6	C3A206

NOTE : "nsp" PART IS LISTED FOR REFERENCE ONLY, MARANTZ WILL NOT SUPPLY THESE PARTS.

P.W.B. NAME	POS. NO.	VERS. COLOR	PART NO. (FOR EUR)	PART NO. (MZ)	PART NAME	DESCRIPTION	
AMP	J601		nsp	nsp	CORD	SN95/PB5, 0.6	C3A206
AMP	J602		nsp	nsp	CORD	SN95/PB5, 0.6	C3A206
AMP	J603		nsp	nsp	CORD	SN95/PB5, 0.6	C3A206
AMP	J604		nsp	nsp	CORD	SN95/PB5, 0.6	C3A206
AMP	J605		nsp	nsp	CORD	SN95/PB5, 0.6	C3A206
AMP	J606		nsp	nsp	CORD	SN95/PB5, 0.6	C3A206
AMP	J607		nsp	nsp	CORD	SN95/PB5, 0.6	C3A206
AMP	J608		nsp	nsp	CORD	SN95/PB5, 0.6	C3A206
AMP	J609		nsp	nsp	CORD	SN95/PB5, 0.6	C3A206
AMP	J610		nsp	nsp	CORD	SN95/PB5, 0.6	C3A206
AMP	J611		nsp	nsp	CORD	SN95/PB5, 0.6	C3A206
AMP	J612		nsp	nsp	CORD	SN95/PB5, 0.6	C3A206
AMP	J613		nsp	nsp	CORD	SN95/PB5, 0.6	C3A206
AMP	J614		nsp	nsp	CORD	SN95/PB5, 0.6	C3A206
AMP	J615		nsp	nsp	CORD	SN95/PB5, 0.6	C3A206
AMP	J616		nsp	nsp	CORD	SN95/PB5, 0.6	C3A206
AMP	J617		nsp	nsp	CORD	SN95/PB5, 0.6	C3A206
AMP	J618		nsp	nsp	CORD	SN95/PB5, 0.6	C3A206
AMP	J619		nsp	nsp	CORD	SN95/PB5, 0.6	C3A206
AMP	J620		nsp	nsp	CORD	SN95/PB5, 0.6	C3A206
AMP	J621		nsp	nsp	CORD	SN95/PB5, 0.6	C3A206
AMP	J622		nsp	nsp	CORD	SN95/PB5, 0.6	C3A206
AMP	J623		nsp	nsp	CORD	SN95/PB5, 0.6	C3A206
AMP	J624		nsp	nsp	CORD	SN95/PB5, 0.6	C3A206
AMP	J625		nsp	nsp	CORD	SN95/PB5, 0.6	C3A206
AMP	J627		nsp	nsp	CORD	SN95/PB5, 0.6	C3A206
AMP	J628		nsp	nsp	CORD	SN95/PB5, 0.6	C3A206
AMP	J629		nsp	nsp	CORD	SN95/PB5, 0.6	C3A206
AMP	J631		nsp	nsp	CORD	SN95/PB5, 0.6	C3A206
AMP	J701		nsp	nsp	CORD	SN95/PB5, 0.6	C3A206
AMP	J702		nsp	nsp	CORD	SN95/PB5, 0.6	C3A206
AMP	J703		nsp	nsp	CORD	SN95/PB5, 0.6	C3A206
AMP	J704		nsp	nsp	CORD	SN95/PB5, 0.6	C3A206
AMP	J705		nsp	nsp	CORD	SN95/PB5, 0.6	C3A206
AMP	J706		nsp	nsp	CORD	SN95/PB5, 0.6	C3A206
AMP	J707		nsp	nsp	CORD	SN95/PB5, 0.6	C3A206
AMP	J708		nsp	nsp	CORD	SN95/PB5, 0.6	C3A206
AMP	J709		nsp	nsp	CORD	SN95/PB5, 0.6	C3A206
AMP	J710		nsp	nsp	CORD	SN95/PB5, 0.6	C3A206
AMP	J711		nsp	nsp	CORD	SN95/PB5, 0.6	C3A206
AMP	J712		nsp	nsp	CORD	SN95/PB5, 0.6	C3A206
AMP	J713		nsp	nsp	CORD	SN95/PB5, 0.6	C3A206
AMP	J714		nsp	nsp	CORD	SN95/PB5, 0.6	C3A206
AMP	J715		nsp	nsp	CORD	SN95/PB5, 0.6	C3A206
AMP	J716		nsp	nsp	CORD	SN95/PB5, 0.6	C3A206
AMP	J717		nsp	nsp	CORD	SN95/PB5, 0.6	C3A206
AMP	J718		nsp	nsp	CORD	SN95/PB5, 0.6	C3A206
AMP	J719		nsp	nsp	CORD	SN95/PB5, 0.6	C3A206
AMP	J720		nsp	nsp	CORD	SN95/PB5, 0.6	C3A206
AMP	J721		nsp	nsp	CORD	SN95/PB5, 0.6	C3A206
AMP	J722		nsp	nsp	CORD	SN95/PB5, 0.6	C3A206
AMP	J723		nsp	nsp	CORD	SN95/PB5, 0.6	C3A206
AMP	J724		nsp	nsp	CORD	SN95/PB5, 0.6	C3A206
AMP	J725		nsp	nsp	CORD	SN95/PB5, 0.6	C3A206
AMP	J726		nsp	nsp	CORD	SN95/PB5, 0.6	C3A206
AMP	J727		nsp	nsp	CORD	SN95/PB5, 0.6	C3A206
AMP	J728		nsp	nsp	CORD	SN95/PB5, 0.6	C3A206
AMP	J729		nsp	nsp	CORD	SN95/PB5, 0.6	C3A206
AMP	J730		nsp	nsp	CORD	SN95/PB5, 0.6	C3A206
AMP	J801		nsp	nsp	CORD	SN95/PB5, 0.6	C3A206
AMP	J802		nsp	nsp	CORD	SN95/PB5, 0.6	C3A206
AMP	J803		nsp	nsp	CORD	SN95/PB5, 0.6	C3A206
AMP	J806		nsp	nsp	CORD	SN95/PB5, 0.6	C3A206
AMP	J807		nsp	nsp	CORD	SN95/PB5, 0.6	C3A206
AMP	J808		nsp	nsp	CORD	SN95/PB5, 0.6	C3A206
AMP	J809		nsp	nsp	CORD	SN95/PB5, 0.6	C3A206
AMP	J810		nsp	nsp	CORD	SN95/PB5, 0.6	C3A206

NOTE : "nsp" PART IS LISTED FOR REFERENCE ONLY, MARANTZ WILL NOT SUPPLY THESE PARTS.

P.W.B. NAME	POS. NO.	VERS. COLOR	PART NO. (FOR EUR)	PART NO. (MZ)	PART NAME	DESCRIPTION	
AMP	Q403		00MHT600121A0	00MHT600121A0	TRS.	KTA1268GR	HVTKTA1268GRT
AMP	Q404		00MHT600121A0	00MHT600121A0	TRS.	KTA1268GR	HVTKTA1268GRT
AMP	Q405		00MHT800931A0	00MHT800931A0	TRS.	KTC3200GR	HVTKTC3200GRT
AMP	Q406		00MHT800931A0	00MHT800931A0	TRS.	KTC3200GR	HVTKTC3200GRT
AMP	Q407		00MHT600121A0	00MHT600121A0	TRS.	KTA1268GR	HVTKTA1268GRT
AMP	Q408		00MHT600121A0	00MHT600121A0	TRS.	KTA1268GR	HVTKTA1268GRT
AMP	Q409		00MHT600121A0	00MHT600121A0	TRS.	KTA1268GR	HVTKTA1268GRT
AMP	Q410		00MHT600121A0	00MHT600121A0	TRS.	KTA1268GR	HVTKTA1268GRT
AMP	Q411		00MHT800931A0	00MHT800931A0	TRS.	KTC3200GR	HVTKTC3200GRT
AMP	Q412		00MHT800931A0	00MHT800931A0	TRS.	KTC3200GR	HVTKTC3200GRT
AMP	Q413		00MHT800931A0	00MHT800931A0	TRS.	KTC3200GR	HVTKTC3200GRT
AMP	Q414		00MHT800931A0	00MHT800931A0	TRS.	KTC3200GR	HVTKTC3200GRT
AMP	Q415		90M-HT600030R	90M-HT600030R	TRS.	KTA1024Y	HVTKTA1024YT
AMP	Q416		90M-HT600030R	90M-HT600030R	TRS.	KTA1024Y	HVTKTA1024YT
AMP	Q417		00MHT800941B0	00MHT800941B0	TRS.	KTC3206Y	HVTKTC3206YAT
AMP	Q418		00MHT800941B0	00MHT800941B0	TRS.	KTC3206Y	HVTKTC3206YAT
AMP	⚠ Q419		00MHC20002080	00MHC20002080	IC	! SAP17NLFNO.552	HVISAP17N
AMP	⚠ Q420		00MHC20002080	00MHC20002080	IC	! SAP17NLFNO.552	HVISAP17N
AMP	⚠ Q421		00MHC20001080	00MHC20001080	IC	! SAP17PLFNO.552	HVISAP17P
AMP	⚠ Q422		00MHC20001080	00MHC20001080	IC	! SAP17PLFNO.552	HVISAP17P
AMP	Q423		00MHT800931A0	00MHT800931A0	TRS.	KTC3200GR	HVTKTC3200GRT
AMP	Q424		00MHT800931A0	00MHT800931A0	TRS.	KTC3200GR	HVTKTC3200GRT
AMP	Q503		00MHT600121A0	00MHT600121A0	TRS.	KTA1268GR	HVTKTA1268GRT
AMP	Q504		00MHT600121A0	00MHT600121A0	TRS.	KTA1268GR	HVTKTA1268GRT
AMP	Q505		00MHT800931A0	00MHT800931A0	TRS.	KTC3200GR	HVTKTC3200GRT
AMP	Q506		00MHT800931A0	00MHT800931A0	TRS.	KTC3200GR	HVTKTC3200GRT
AMP	Q507		00MHT600121A0	00MHT600121A0	TRS.	KTA1268GR	HVTKTA1268GRT
AMP	Q508		00MHT600121A0	00MHT600121A0	TRS.	KTA1268GR	HVTKTA1268GRT
AMP	Q509		00MHT600121A0	00MHT600121A0	TRS.	KTA1268GR	HVTKTA1268GRT
AMP	Q510		00MHT600121A0	00MHT600121A0	TRS.	KTA1268GR	HVTKTA1268GRT
AMP	Q511		00MHT800931A0	00MHT800931A0	TRS.	KTC3200GR	HVTKTC3200GRT
AMP	Q512		00MHT800931A0	00MHT800931A0	TRS.	KTC3200GR	HVTKTC3200GRT
AMP	Q513		00MHT800931A0	00MHT800931A0	TRS.	KTC3200GR	HVTKTC3200GRT
AMP	Q514		00MHT800931A0	00MHT800931A0	TRS.	KTC3200GR	HVTKTC3200GRT
AMP	Q515		90M-HT600030R	90M-HT600030R	TRS.	KTA1024Y	HVTKTA1024YT
AMP	Q516		90M-HT600030R	90M-HT600030R	TRS.	KTA1024Y	HVTKTA1024YT
AMP	Q517		00MHT800941B0	00MHT800941B0	TRS.	KTC3206Y	HVTKTC3206YAT
AMP	Q518		00MHT800941B0	00MHT800941B0	TRS.	KTC3206Y	HVTKTC3206YAT
AMP	⚠ Q519		00MHC20002080	00MHC20002080	IC	! SAP17NLFNO.552	HVISAP17N
AMP	⚠ Q520		00MHC20002080	00MHC20002080	IC	! SAP17NLFNO.552	HVISAP17N
AMP	⚠ Q521		00MHC20001080	00MHC20001080	IC	! SAP17PLFNO.552	HVISAP17P
AMP	⚠ Q522		00MHC20001080	00MHC20001080	IC	! SAP17PLFNO.552	HVISAP17P
AMP	Q523		00MHT800931A0	00MHT800931A0	TRS.	KTC3200GR	HVTKTC3200GRT
AMP	Q524		00MHT800931A0	00MHT800931A0	TRS.	KTC3200GR	HVTKTC3200GRT
AMP	Q603		00MHT600121A0	00MHT600121A0	TRS.	KTA1268GR	HVTKTA1268GRT
AMP	Q604		00MHT600121A0	00MHT600121A0	TRS.	KTA1268GR	HVTKTA1268GRT
AMP	Q605		00MHT800931A0	00MHT800931A0	TRS.	KTC3200GR	HVTKTC3200GRT
AMP	Q606		00MHT800931A0	00MHT800931A0	TRS.	KTC3200GR	HVTKTC3200GRT
AMP	Q607		00MHT600121A0	00MHT600121A0	TRS.	KTA1268GR	HVTKTA1268GRT
AMP	Q608		00MHT600121A0	00MHT600121A0	TRS.	KTA1268GR	HVTKTA1268GRT
AMP	Q609		00MHT600121A0	00MHT600121A0	TRS.	KTA1268GR	HVTKTA1268GRT
AMP	Q610		00MHT600121A0	00MHT600121A0	TRS.	KTA1268GR	HVTKTA1268GRT
AMP	Q611		00MHT800931A0	00MHT800931A0	TRS.	KTC3200GR	HVTKTC3200GRT
AMP	Q612		00MHT800931A0	00MHT800931A0	TRS.	KTC3200GR	HVTKTC3200GRT
AMP	Q613		00MHT800931A0	00MHT800931A0	TRS.	KTC3200GR	HVTKTC3200GRT
AMP	Q614		00MHT800931A0	00MHT800931A0	TRS.	KTC3200GR	HVTKTC3200GRT
AMP	Q615		90M-HT600030R	90M-HT600030R	TRS.	KTA1024Y	HVTKTA1024YT
AMP	Q616		90M-HT600030R	90M-HT600030R	TRS.	KTA1024Y	HVTKTA1024YT
AMP	Q617		00MHT800941B0	00MHT800941B0	TRS.	KTC3206Y	HVTKTC3206YAT
AMP	Q618		00MHT800941B0	00MHT800941B0	TRS.	KTC3206Y	HVTKTC3206YAT
AMP	⚠ Q619		00MHC20002080	00MHC20002080	IC	! SAP17NLFNO.552	HVISAP17N
AMP	⚠ Q620		00MHC20002080	00MHC20002080	IC	! SAP17NLFNO.552	HVISAP17N
AMP	⚠ Q621		00MHC20001080	00MHC20001080	IC	! SAP17PLFNO.552	HVISAP17P
AMP	⚠ Q622		00MHC20001080	00MHC20001080	IC	! SAP17PLFNO.552	HVISAP17P
AMP	Q623		00MHT800931A0	00MHT800931A0	TRS.	KTC3200GR	HVTKTC3200GRT
AMP	Q624		00MHT800931A0	00MHT800931A0	TRS.	KTC3200GR	HVTKTC3200GRT
AMP	Q703		00MHT600121A0	00MHT600121A0	TRS.	KTA1268GR	HVTKTA1268GRT

NOTE : "nsp" PART IS LISTED FOR REFERENCE ONLY, MARANTZ WILL NOT SUPPLY THESE PARTS.

P.W.B. NAME	POS. NO.	VERS. COLOR	PART NO. (FOR EUR)	PART NO. (MZ)	PART NAME	DESCRIPTION	
AMP	Q705		00MHT800931A0	00MHT800931A0	TRS.	KTC3200GR	HVTKTC3200GRT
AMP	Q707		00MHT600121A0	00MHT600121A0	TRS.	KTA1268GR	HVTKTA1268GRT
AMP	Q709		00MHT600121A0	00MHT600121A0	TRS.	KTA1268GR	HVTKTA1268GRT
AMP	Q711		00MHT800931A0	00MHT800931A0	TRS.	KTC3200GR	HVTKTC3200GRT
AMP	Q713		00MHT800931A0	00MHT800931A0	TRS.	KTC3200GR	HVTKTC3200GRT
AMP	Q715		90M-HT600030R	90M-HT600030R	TRS.	KTA1024Y	HVTKTA1024YT
AMP	Q717		00MHT800941B0	00MHT800941B0	TRS.	KTC3206Y	HVTKTC3206YAT
AMP	⚠ Q719		00MHC20002080	00MHC20002080	IC	! SAP17NLFNO.552	HVISAP17N
AMP	⚠ Q721		00MHC20001080	00MHC20001080	IC	! SAP17PLFNO.552	HVISAP17P
AMP	Q723		00MHT800931A0	00MHT800931A0	TRS.	KTC3200GR	HVTKTC3200GRT
AMP	Q801		90M-HT800050R	90M-HT800050R	TRS.	KTC3198Y	HVTKTC3198YT
AMP	Q802		90M-HT800050R	90M-HT800050R	TRS.	KTC3198Y	HVTKTC3198YT
AMP	Q803		00MBA20001000	00MBA20001000	TRS.	KRC102M	HVTKRC102MT
AMP	Q804		90M-BA001450R	90M-BA001450R	TRS.	KRA107M	HVTKRA107MT
AMP	Q805		00MHT800931A0	00MHT800931A0	TRS.	KTC3200GR	HVTKTC3200GRT
AMP	Q806		00MHT800931A0	00MHT800931A0	TRS.	KTC3200GR	HVTKTC3200GRT
AMP	Q807		00MHT600121A0	00MHT600121A0	TRS.	KTA1268GR	HVTKTA1268GRT
AMP	Q808		90M-HT800050R	90M-HT800050R	TRS.	KTC3198Y	HVTKTC3198YT
AMP	R401		nsp	nsp	RES.	33K OHM 1/5W J	CRD20TJ333T
AMP	R402		nsp	nsp	RES.	33K OHM 1/5W J	CRD20TJ333T
AMP	R403		nsp	nsp	RES.	1K OHM 1/5W J	CRD20TJ102T
AMP	R404		nsp	nsp	RES.	1K OHM 1/5W J	CRD20TJ102T
AMP	R405		nsp	nsp	RES.	100 OHM 1/5W J	CRD20TJ101T
AMP	R406		nsp	nsp	RES.	100 OHM 1/5W J	CRD20TJ101T
AMP	R407		nsp	nsp	RES.	12K OHM 1/5W J	CRD20TJ123T
AMP	R408		nsp	nsp	RES.	12K OHM 1/5W J	CRD20TJ123T
AMP	R409		nsp	nsp	RES.	12K OHM 1/5W J	CRD20TJ123T
AMP	R410		nsp	nsp	RES.	12K OHM 1/5W J	CRD20TJ123T
AMP	R411		nsp	nsp	RES.	470 OHM 1/5W J	CRD20TJ471T
AMP	R412		nsp	nsp	RES.	470 OHM 1/5W J	CRD20TJ471T
AMP	R413		nsp	nsp	RES.	470 OHM 1/5W J	CRD20TJ471T
AMP	R414		nsp	nsp	RES.	470 OHM 1/5W J	CRD20TJ471T
AMP	R415		nsp	nsp	RES.	68 OHM 1/5W J	CRD20TJ680T
AMP	R416		nsp	nsp	RES.	68 OHM 1/5W J	CRD20TJ680T
AMP	R417		nsp	nsp	RES.	68 OHM 1/5W J	CRD20TJ680T
AMP	R418		nsp	nsp	RES.	68 OHM 1/5W J	CRD20TJ680T
AMP	R419		90M-NB000010R	90M-NB000010R	RES.	LT20001/6S J	HRT16C1512000JT
AMP	R420		90M-NB000010R	90M-NB000010R	RES.	LT20001/6S J	HRT16C1512000JT
AMP	R421		90M-NB000010R	90M-NB000010R	RES.	LT20001/6S J	HRT16C1512000JT
AMP	R422		90M-NB000010R	90M-NB000010R	RES.	LT20001/6S J	HRT16C1512000JT
AMP	R423		nsp	nsp	RES.	330K OHM 1/6W J	CRD20TJ334T
AMP	R424		nsp	nsp	RES.	330K OHM 1/6W J	CRD20TJ334T
AMP	R425		nsp	nsp	RES.	330K OHM 1/6W J	CRD20TJ334T
AMP	R426		nsp	nsp	RES.	330K OHM 1/6W J	CRD20TJ334T
AMP	R427		nsp	nsp	RES.	100 OHM 1/5W J	CRD20TJ101T
AMP	R428		nsp	nsp	RES.	100 OHM 1/5W J	CRD20TJ101T
AMP	R429		nsp	nsp	RES.	100 OHM 1/5W J	CRD20TJ101T
AMP	R430		nsp	nsp	RES.	100 OHM 1/5W J	CRD20TJ101T
AMP	R431		nsp	nsp	RES.	10 OHM 1/4W J	CRD25TJ100T
AMP	R432		nsp	nsp	RES.	10 OHM 1/4W J	CRD25TJ100T
AMP	R433		nsp	nsp	RES.	10 OHM 1/4W J	CRD25TJ100T
AMP	R434		nsp	nsp	RES.	10 OHM 1/4W J	CRD25TJ100T
AMP	R435		nsp	nsp	RES.	27 OHM 1/6W J	CRD20TJ270T
AMP	R436		nsp	nsp	RES.	27 OHM 1/6W J	CRD20TJ270T
AMP	R439		nsp	nsp	RES.	120 OHM 1W J	KRG1SANJ121RT
AMP	R440		nsp	nsp	RES.	120 OHM 1W J	KRG1SANJ121RT
AMP	R441		nsp	nsp	RES.	120 OHM 1W J	KRG1SANJ121RT
AMP	R442		nsp	nsp	RES.	120 OHM 1W J	KRG1SANJ121RT
AMP	R443		nsp	nsp	RES.	120 OHM 1W J	KRG1SANJ121RT
AMP	R444		nsp	nsp	RES.	120 OHM 1W J	KRG1SANJ121RT
AMP	R445		nsp	nsp	RES.	47 OHM 1W J	KRG1SANJ470RT
AMP	R446		nsp	nsp	RES.	47 OHM 1W J	KRG1SANJ470RT
AMP	R449		nsp	nsp	RES.	15 OHM 1/6W J	CRD20TJ150T
AMP	R450		nsp	nsp	RES.	15 OHM 1/6W J	CRD20TJ150T
AMP	R451		nsp	nsp	RES.	10 OHM 1/5W J	CRD20TJ100T
AMP	R452		nsp	nsp	RES.	10 OHM 1/5W J	CRD20TJ100T
AMP	R453		nsp	nsp	RES.	1K OHM 1/5W J	CRD20TJ102T

NOTE : "nsp" PART IS LISTED FOR REFERENCE ONLY, MARANTZ WILL NOT SUPPLY THESE PARTS.

P.W.B. NAME	POS. NO.	VERS. COLOR	PART NO. (FOR EUR)	PART NO. (MZ)	PART NAME	DESCRIPTION	
AMP	R454		nsp	nsp	RES.	1K OHM 1/5W J	CRD20TJ102T
AMP	R455		nsp	nsp	RES.	1K OHM 1/5W J	CRD20TJ102T
AMP	R456		nsp	nsp	RES.	1K OHM 1/5W J	CRD20TJ102T
AMP	R457		nsp	nsp	RES.	680 OHM 1/5W J	CRD20TJ681T
AMP	R458		nsp	nsp	RES.	680 OHM 1/5W J	CRD20TJ681T
AMP	R459		nsp	nsp	RES.	39K OHM 1/5W J	CRD20TJ393T
AMP	R460		nsp	nsp	RES.	39K OHM 1/5W J	CRD20TJ393T
AMP	R461		nsp	nsp	RES.	39K OHM 1/5W J	CRD20TJ393T
AMP	R462		nsp	nsp	RES.	39K OHM 1/5W J	CRD20TJ393T
AMP	R463		nsp	nsp	RES.	22K OHM 1/5W J	CRD20TJ223T
AMP	R464		nsp	nsp	RES.	22K OHM 1/5W J	CRD20TJ223T
AMP	R465		nsp	nsp	RES.	680 OHM 1/5W J	CRD20TJ681T
AMP	R466		nsp	nsp	RES.	680 OHM 1/5W J	CRD20TJ681T
AMP	R467		nsp	nsp	RES.	33K OHM 1/5W J	CRD20TJ333T
AMP	R468		nsp	nsp	RES.	33K OHM 1/5W J	CRD20TJ333T
AMP	R469		nsp	nsp	RES.	22K OHM 1/5W J	CRD20TJ223T
AMP	R470		nsp	nsp	RES.	22K OHM 1/5W J	CRD20TJ223T
AMP	R471		nsp	nsp	RES.	120 OHM 1/5W J	CRD20TJ121T
AMP	R472		nsp	nsp	RES.	120 OHM 1/5W J	CRD20TJ121T
AMP	R473		nsp	nsp	RES.	120 OHM 1/5W J	CRD20TJ121T
AMP	R474		nsp	nsp	RES.	120 OHM 1/5W J	CRD20TJ121T
AMP	R501		nsp	nsp	RES.	33K OHM 1/5W J	CRD20TJ333T
AMP	R502		nsp	nsp	RES.	33K OHM 1/5W J	CRD20TJ333T
AMP	R503		nsp	nsp	RES.	1K OHM 1/5W J	CRD20TJ102T
AMP	R504		nsp	nsp	RES.	1K OHM 1/5W J	CRD20TJ102T
AMP	R505		nsp	nsp	RES.	100 OHM 1/5W J	CRD20TJ101T
AMP	R506		nsp	nsp	RES.	100 OHM 1/5W J	CRD20TJ101T
AMP	R507		nsp	nsp	RES.	12K OHM 1/5W J	CRD20TJ123T
AMP	R508		nsp	nsp	RES.	12K OHM 1/5W J	CRD20TJ123T
AMP	R509		nsp	nsp	RES.	12K OHM 1/5W J	CRD20TJ123T
AMP	R510		nsp	nsp	RES.	12K OHM 1/5W J	CRD20TJ123T
AMP	R511		nsp	nsp	RES.	470 OHM 1/5W J	CRD20TJ471T
AMP	R512		nsp	nsp	RES.	470 OHM 1/5W J	CRD20TJ471T
AMP	R513		nsp	nsp	RES.	470 OHM 1/5W J	CRD20TJ471T
AMP	R514		nsp	nsp	RES.	470 OHM 1/5W J	CRD20TJ471T
AMP	R515		nsp	nsp	RES.	68 OHM 1/5W J	CRD20TJ680T
AMP	R516		nsp	nsp	RES.	68 OHM 1/5W J	CRD20TJ680T
AMP	R517		nsp	nsp	RES.	68 OHM 1/5W J	CRD20TJ680T
AMP	R518		nsp	nsp	RES.	68 OHM 1/5W J	CRD20TJ680T
AMP	R519		90M-NB000010R	90M-NB000010R	RES.	LT20001/6S J	HRT16C1512000JT
AMP	R520		90M-NB000010R	90M-NB000010R	RES.	LT20001/6S J	HRT16C1512000JT
AMP	R521		90M-NB000010R	90M-NB000010R	RES.	LT20001/6S J	HRT16C1512000JT
AMP	R522		90M-NB000010R	90M-NB000010R	RES.	LT20001/6S J	HRT16C1512000JT
AMP	R523		nsp	nsp	RES.	330K OHM 1/6W J	CRD20TJ334T
AMP	R524		nsp	nsp	RES.	330K OHM 1/6W J	CRD20TJ334T
AMP	R525		nsp	nsp	RES.	330K OHM 1/6W J	CRD20TJ334T
AMP	R526		nsp	nsp	RES.	330K OHM 1/6W J	CRD20TJ334T
AMP	R527		nsp	nsp	RES.	100 OHM 1/5W J	CRD20TJ101T
AMP	R528		nsp	nsp	RES.	100 OHM 1/5W J	CRD20TJ101T
AMP	R529		nsp	nsp	RES.	100 OHM 1/5W J	CRD20TJ101T
AMP	R530		nsp	nsp	RES.	100 OHM 1/5W J	CRD20TJ101T
AMP	R531		nsp	nsp	RES.	10 OHM 1/4W J	CRD25TJ100T
AMP	R532		nsp	nsp	RES.	10 OHM 1/4W J	CRD25TJ100T
AMP	R533		nsp	nsp	RES.	10 OHM 1/4W J	CRD25TJ100T
AMP	R534		nsp	nsp	RES.	10 OHM 1/4W J	CRD25TJ100T
AMP	R535		nsp	nsp	RES.	27 OHM 1/6W J	CRD20TJ270T
AMP	R536		nsp	nsp	RES.	27 OHM 1/6W J	CRD20TJ270T
AMP	R539		nsp	nsp	RES.	120 OHM 1W J	KRG1SANJ121RT
AMP	R540		nsp	nsp	RES.	120 OHM 1W J	KRG1SANJ121RT
AMP	R541		nsp	nsp	RES.	120 OHM 1W J	KRG1SANJ121RT
AMP	R542		nsp	nsp	RES.	120 OHM 1W J	KRG1SANJ121RT
AMP	R543		nsp	nsp	RES.	120 OHM 1W J	KRG1SANJ121RT
AMP	R544		nsp	nsp	RES.	120 OHM 1W J	KRG1SANJ121RT
AMP	R545		nsp	nsp	RES.	47 OHM 1W J	KRG1SANJ470RT
AMP	R546		nsp	nsp	RES.	47 OHM 1W J	KRG1SANJ470RT
AMP	R549		nsp	nsp	RES.	15 OHM 1/6W J	CRD20TJ150T
AMP	R550		nsp	nsp	RES.	15 OHM 1/6W J	CRD20TJ150T

NOTE : "nsp" PART IS LISTED FOR REFERENCE ONLY, MARANTZ WILL NOT SUPPLY THESE PARTS.

P.W.B. NAME	POS. NO.	VERS. COLOR	PART NO. (FOR EUR)	PART NO. (MZ)	PART NAME	DESCRIPTION	
AMP	R551		nsp	nsp	RES.	10 OHM 1/5W J	CRD20TJ100T
AMP	R552		nsp	nsp	RES.	10 OHM 1/5W J	CRD20TJ100T
AMP	R553		nsp	nsp	RES.	1K OHM 1/5W J	CRD20TJ102T
AMP	R554		nsp	nsp	RES.	1K OHM 1/5W J	CRD20TJ102T
AMP	R555		nsp	nsp	RES.	1K OHM 1/5W J	CRD20TJ102T
AMP	R556		nsp	nsp	RES.	1K OHM 1/5W J	CRD20TJ102T
AMP	R557		nsp	nsp	RES.	680 OHM 1/5W J	CRD20TJ681T
AMP	R558		nsp	nsp	RES.	680 OHM 1/5W J	CRD20TJ681T
AMP	R559		nsp	nsp	RES.	39K OHM 1/5W J	CRD20TJ393T
AMP	R560		nsp	nsp	RES.	39K OHM 1/5W J	CRD20TJ393T
AMP	R561		nsp	nsp	RES.	39K OHM 1/5W J	CRD20TJ393T
AMP	R562		nsp	nsp	RES.	39K OHM 1/5W J	CRD20TJ393T
AMP	R563		nsp	nsp	RES.	22K OHM 1/5W J	CRD20TJ223T
AMP	R564		nsp	nsp	RES.	22K OHM 1/5W J	CRD20TJ223T
AMP	R565		nsp	nsp	RES.	680 OHM 1/5W J	CRD20TJ681T
AMP	R566		nsp	nsp	RES.	680 OHM 1/5W J	CRD20TJ681T
AMP	R567		nsp	nsp	RES.	33K OHM 1/5W J	CRD20TJ333T
AMP	R568		nsp	nsp	RES.	33K OHM 1/5W J	CRD20TJ333T
AMP	R569		nsp	nsp	RES.	22K OHM 1/5W J	CRD20TJ223T
AMP	R570		nsp	nsp	RES.	22K OHM 1/5W J	CRD20TJ223T
AMP	R571		nsp	nsp	RES.	120 OHM 1/5W J	CRD20TJ121T
AMP	R572		nsp	nsp	RES.	120 OHM 1/5W J	CRD20TJ121T
AMP	R573		nsp	nsp	RES.	120 OHM 1/5W J	CRD20TJ121T
AMP	R574		nsp	nsp	RES.	120 OHM 1/5W J	CRD20TJ121T
AMP	R601		nsp	nsp	RES.	33K OHM 1/5W J	CRD20TJ333T
AMP	R602		nsp	nsp	RES.	33K OHM 1/5W J	CRD20TJ333T
AMP	R603		nsp	nsp	RES.	1K OHM 1/5W J	CRD20TJ102T
AMP	R604		nsp	nsp	RES.	1K OHM 1/5W J	CRD20TJ102T
AMP	R605		nsp	nsp	RES.	100 OHM 1/5W J	CRD20TJ101T
AMP	R606		nsp	nsp	RES.	100 OHM 1/5W J	CRD20TJ101T
AMP	R607		nsp	nsp	RES.	12K OHM 1/5W J	CRD20TJ123T
AMP	R608		nsp	nsp	RES.	12K OHM 1/5W J	CRD20TJ123T
AMP	R609		nsp	nsp	RES.	12K OHM 1/5W J	CRD20TJ123T
AMP	R610		nsp	nsp	RES.	12K OHM 1/5W J	CRD20TJ123T
AMP	R611		nsp	nsp	RES.	470 OHM 1/5W J	CRD20TJ471T
AMP	R612		nsp	nsp	RES.	470 OHM 1/5W J	CRD20TJ471T
AMP	R613		nsp	nsp	RES.	470 OHM 1/5W J	CRD20TJ471T
AMP	R614		nsp	nsp	RES.	470 OHM 1/5W J	CRD20TJ471T
AMP	R615		nsp	nsp	RES.	68 OHM 1/5W J	CRD20TJ680T
AMP	R616		nsp	nsp	RES.	68 OHM 1/5W J	CRD20TJ680T
AMP	R617		nsp	nsp	RES.	68 OHM 1/5W J	CRD20TJ680T
AMP	R618		nsp	nsp	RES.	68 OHM 1/5W J	CRD20TJ680T
AMP	R619		90M-NB000010R	90M-NB000010R	RES.	LT20001/6S J	HRT16C1512000JT
AMP	R620		90M-NB000010R	90M-NB000010R	RES.	LT20001/6S J	HRT16C1512000JT
AMP	R621		90M-NB000010R	90M-NB000010R	RES.	LT20001/6S J	HRT16C1512000JT
AMP	R622		90M-NB000010R	90M-NB000010R	RES.	LT20001/6S J	HRT16C1512000JT
AMP	R623		nsp	nsp	RES.	330K OHM 1/6W J	CRD20TJ334T
AMP	R624		nsp	nsp	RES.	330K OHM 1/6W J	CRD20TJ334T
AMP	R625		nsp	nsp	RES.	330K OHM 1/6W J	CRD20TJ334T
AMP	R626		nsp	nsp	RES.	330K OHM 1/6W J	CRD20TJ334T
AMP	R627		nsp	nsp	RES.	100 OHM 1/5W J	CRD20TJ101T
AMP	R628		nsp	nsp	RES.	100 OHM 1/5W J	CRD20TJ101T
AMP	R629		nsp	nsp	RES.	100 OHM 1/5W J	CRD20TJ101T
AMP	R630		nsp	nsp	RES.	100 OHM 1/5W J	CRD20TJ101T
AMP	R631		nsp	nsp	RES.	10 OHM 1/4W J	CRD25TJ100T
AMP	R632		nsp	nsp	RES.	10 OHM 1/4W J	CRD25TJ100T
AMP	R633		nsp	nsp	RES.	10 OHM 1/4W J	CRD25TJ100T
AMP	R634		nsp	nsp	RES.	10 OHM 1/4W J	CRD25TJ100T
AMP	R635		nsp	nsp	RES.	27 OHM 1/6W J	CRD20TJ270T
AMP	R636		nsp	nsp	RES.	27 OHM 1/6W J	CRD20TJ270T
AMP	R639		nsp	nsp	RES.	120 OHM 1W J	KRG1SANJ121RT
AMP	R640		nsp	nsp	RES.	120 OHM 1W J	KRG1SANJ121RT
AMP	R641		nsp	nsp	RES.	120 OHM 1W J	KRG1SANJ121RT
AMP	R642		nsp	nsp	RES.	120 OHM 1W J	KRG1SANJ121RT
AMP	R643		nsp	nsp	RES.	120 OHM 1W J	KRG1SANJ121RT
AMP	R644		nsp	nsp	RES.	120 OHM 1W J	KRG1SANJ121RT
AMP	R645		nsp	nsp	RES.	47 OHM 1W J	KRG1SANJ470RT

NOTE : "nsp" PART IS LISTED FOR REFERENCE ONLY, MARANTZ WILL NOT SUPPLY THESE PARTS.

P.W.B. NAME	POS. NO.	VERS. COLOR	PART NO. (FOR EUR)	PART NO. (MZ)	PART NAME	DESCRIPTION	
AMP	R646		nsp	nsp	RES.	47 OHM 1W J	KRG1SANJ470RT
AMP	R649		nsp	nsp	RES.	15 OHM 1/6W J	CRD20TJ150T
AMP	R650		nsp	nsp	RES.	15 OHM 1/6W J	CRD20TJ150T
AMP	R651		nsp	nsp	RES.	10 OHM 1/5W J	CRD20TJ100T
AMP	R652		nsp	nsp	RES.	10 OHM 1/5W J	CRD20TJ100T
AMP	R653		nsp	nsp	RES.	1K OHM 1/5W J	CRD20TJ102T
AMP	R654		nsp	nsp	RES.	1K OHM 1/5W J	CRD20TJ102T
AMP	R655		nsp	nsp	RES.	1K OHM 1/5W J	CRD20TJ102T
AMP	R656		nsp	nsp	RES.	1K OHM 1/5W J	CRD20TJ102T
AMP	R657		nsp	nsp	RES.	680 OHM 1/5W J	CRD20TJ681T
AMP	R658		nsp	nsp	RES.	680 OHM 1/5W J	CRD20TJ681T
AMP	R659		nsp	nsp	RES.	39K OHM 1/5W J	CRD20TJ393T
AMP	R660		nsp	nsp	RES.	39K OHM 1/5W J	CRD20TJ393T
AMP	R661		nsp	nsp	RES.	39K OHM 1/5W J	CRD20TJ393T
AMP	R662		nsp	nsp	RES.	39K OHM 1/5W J	CRD20TJ393T
AMP	R663		nsp	nsp	RES.	22K OHM 1/5W J	CRD20TJ223T
AMP	R664		nsp	nsp	RES.	22K OHM 1/5W J	CRD20TJ223T
AMP	R665		nsp	nsp	RES.	680 OHM 1/5W J	CRD20TJ681T
AMP	R666		nsp	nsp	RES.	680 OHM 1/5W J	CRD20TJ681T
AMP	R667		nsp	nsp	RES.	33K OHM 1/5W J	CRD20TJ333T
AMP	R668		nsp	nsp	RES.	33K OHM 1/5W J	CRD20TJ333T
AMP	R669		nsp	nsp	RES.	22K OHM 1/5W J	CRD20TJ223T
AMP	R670		nsp	nsp	RES.	22K OHM 1/5W J	CRD20TJ223T
AMP	R671		nsp	nsp	RES.	120 OHM 1/5W J	CRD20TJ121T
AMP	R672		nsp	nsp	RES.	120 OHM 1/5W J	CRD20TJ121T
AMP	R673		nsp	nsp	RES.	120 OHM 1/5W J	CRD20TJ121T
AMP	R674		nsp	nsp	RES.	120 OHM 1/5W J	CRD20TJ121T
AMP	R701		nsp	nsp	RES.	33K OHM 1/5W J	CRD20TJ333T
AMP	R703		nsp	nsp	RES.	1K OHM 1/5W J	CRD20TJ102T
AMP	R705		nsp	nsp	RES.	100 OHM 1/5W J	CRD20TJ101T
AMP	R707		nsp	nsp	RES.	12K OHM 1/5W J	CRD20TJ123T
AMP	R709		nsp	nsp	RES.	12K OHM 1/5W J	CRD20TJ123T
AMP	R711		nsp	nsp	RES.	470 OHM 1/5W J	CRD20TJ471T
AMP	R713		nsp	nsp	RES.	470 OHM 1/5W J	CRD20TJ471T
AMP	R715		nsp	nsp	RES.	68 OHM 1/5W J	CRD20TJ680T
AMP	R717		nsp	nsp	RES.	68 OHM 1/5W J	CRD20TJ680T
AMP	R719		90M-NB000010R	90M-NB000010R	RES.	LT20001/6S J	HRT16C1512000JT
AMP	R721		90M-NB000010R	90M-NB000010R	RES.	LT20001/6S J	HRT16C1512000JT
AMP	R723		nsp	nsp	RES.	330K OHM 1/6W J	CRD20TJ334T
AMP	R725		nsp	nsp	RES.	330K OHM 1/6W J	CRD20TJ334T
AMP	R727		nsp	nsp	RES.	100 OHM 1/5W J	CRD20TJ101T
AMP	R729		nsp	nsp	RES.	100 OHM 1/5W J	CRD20TJ101T
AMP	R731		nsp	nsp	RES.	10 OHM 1/4W J	CRD25TJ100T
AMP	R733		nsp	nsp	RES.	10 OHM 1/4W J	CRD25TJ100T
AMP	R735		nsp	nsp	RES.	27 OHM 1/6W J	CRD20TJ270T
AMP	R739		nsp	nsp	RES.	120 OHM 1W J	KRG1SANJ121RT
AMP	R741		nsp	nsp	RES.	120 OHM 1W J	KRG1SANJ121RT
AMP	R743		nsp	nsp	RES.	120 OHM 1W J	KRG1SANJ121RT
AMP	R745		nsp	nsp	RES.	47 OHM 1W J	KRG1SANJ470RT
AMP	R749		nsp	nsp	RES.	15 OHM 1/6W J	CRD20TJ150T
AMP	R751		nsp	nsp	RES.	10 OHM 1/5W J	CRD20TJ100T
AMP	R753		nsp	nsp	RES.	1K OHM 1/5W J	CRD20TJ102T
AMP	R755		nsp	nsp	RES.	1K OHM 1/5W J	CRD20TJ102T
AMP	R757		nsp	nsp	RES.	680 OHM 1/5W J	CRD20TJ681T
AMP	R759		nsp	nsp	RES.	39K OHM 1/5W J	CRD20TJ393T
AMP	R761		nsp	nsp	RES.	39K OHM 1/5W J	CRD20TJ393T
AMP	R763		nsp	nsp	RES.	22K OHM 1/5W J	CRD20TJ223T
AMP	R765		nsp	nsp	RES.	680 OHM 1/5W J	CRD20TJ681T
AMP	R767		nsp	nsp	RES.	33K OHM 1/5W J	CRD20TJ333T
AMP	R769		nsp	nsp	RES.	22K OHM 1/5W J	CRD20TJ223T
AMP	R771		nsp	nsp	RES.	120 OHM 1/5W J	CRD20TJ121T
AMP	R773		nsp	nsp	RES.	120 OHM 1/5W J	CRD20TJ121T
AMP	R801		nsp	nsp	RES.	68K OHM 1/5W J	CRD20TJ683T
AMP	R802		nsp	nsp	RES.	68K OHM 1/5W J	CRD20TJ683T
AMP	R803		nsp	nsp	RES.	68K OHM 1/5W J	CRD20TJ683T
AMP	R804		nsp	nsp	RES.	68K OHM 1/5W J	CRD20TJ683T
AMP	R805		nsp	nsp	RES.	68K OHM 1/5W J	CRD20TJ683T

NOTE : "nsp" PART IS LISTED FOR REFERENCE ONLY, MARANTZ WILL NOT SUPPLY THESE PARTS.

P.W.B. NAME	POS. NO.	VERS. COLOR	PART NO. (FOR EUR)	PART NO. (MZ)	PART NAME	DESCRIPTION	
AMP	R806		nsp	nsp	RES.	68K OHM 1/5W J	CRD20TJ683T
AMP	R807		nsp	nsp	RES.	68K OHM 1/5W J	CRD20TJ683T
AMP	R810		nsp	nsp	RES.	15K OHM 1/5W J	CRD20TJ153T
AMP	R811		nsp	nsp	RES.	10K OHM 1/5W J	CRD20TJ103T
AMP	R812		nsp	nsp	RES.	10K OHM 1/5W J	CRD20TJ103T
AMP	R813		nsp	nsp	RES.	10K OHM 1/5W J	CRD20TJ103T
AMP	R814		nsp	nsp	RES.	4.7K OHM 1/5W J	CRD20TJ472T
AMP	R815		nsp	nsp	RES.	15K OHM 1/5W J	CRD20TJ153T
AMP	R816		nsp	nsp	RES.	5.6K OHM 1/5W J	CRD20TJ562T
AMP	R818		nsp	nsp	RES.	100 OHM 1/5W J	CRD20TJ101T
AMP	R819		nsp	nsp	RES.	100 OHM 1/5W J	CRD20TJ101T
AMP	R820		nsp	nsp	RES.	33K OHM 1/5W J	CRD20TJ333T
AMP	R821		nsp	nsp	RES.	4.7K OHM 1/5W J	CRD20TJ472T
AMP	R822		nsp	nsp	RES.	24K OHM 1/5W J	CRD20TJ243T
AMP	R823		nsp	nsp	RES.	6.8K OHM 1/5W J	CRD20TJ682T
AMP	R824		nsp	nsp	CORD	SN95/PB5, 0.6	C3A206
AMP	R825		nsp	nsp	RES.	3.3K OHM 1/5W J	CRD20TJ332T
AMP	R826		nsp	nsp	RES.	51K OHM 1/5W J	CRD20TJ513T
AMP	R827		nsp	nsp	RES.	15K OHM 1/5W J	CRD20TJ153T
AMP	R828		nsp	nsp	RES.	7.5K OHM 1/5W J	CRD20TJ752T
AMP	VR41		90M-RA001090R	90M-RA001090R	TRIM. RES.	220 OHM	CVN1RE221B01T
AMP	VR42		90M-RA001090R	90M-RA001090R	TRIM. RES.	220 OHM	CVN1RE221B01T
AMP	VR51		90M-RA001090R	90M-RA001090R	TRIM. RES.	220 OHM	CVN1RE221B01T
AMP	VR52		90M-RA001090R	90M-RA001090R	TRIM. RES.	220 OHM	CVN1RE221B01T
AMP	VR61		90M-RA001090R	90M-RA001090R	TRIM. RES.	220 OHM	CVN1RE221B01T
AMP	VR62		90M-RA001090R	90M-RA001090R	TRIM. RES.	220 OHM	CVN1RE221B01T
AMP	VR71		90M-RA001090R	90M-RA001090R	TRIM. RES.	220 OHM	CVN1RE221B01T
					COMPONENT PWB (CUP11894Z)		
COMP	BK91		nsp	nsp	BRACKET	BRACKET FOR PWB	CMD1A569
COMP	BK92		nsp	nsp	BRACKET	BRACKET FOR PWB	CMD1A569
COMP	C801		nsp	00MDK96103300	CER. CAP.	0.01UF 50V KC	CCUS1H103KC
COMP	C802		nsp	00MOA47602520	ELECT CAP.	47UF 25V	CCEA1EH470T
COMP	C803		nsp	00MDK96103300	CER. CAP.	0.01UF 50V KC	CCUS1H103KC
COMP	C804		nsp	00MOA47602520	ELECT CAP.	47UF 25V	CCEA1EH470T
COMP	C805		nsp	00MDK96103300	CER. CAP.	0.01UF 50V KC	CCUS1H103KC
COMP	C806		nsp	00MOA47602520	ELECT CAP.	47UF 25V	CCEA1EH470T
COMP	C807		nsp	00MDK96103300	CER. CAP.	0.01UF 50V KC	CCUS1H103KC
COMP	C808		nsp	00MDK96103300	CER. CAP.	0.01UF 50V KC	CCUS1H103KC
COMP	C809		nsp	00MDK96103300	CER. CAP.	0.01UF 50V KC	CCUS1H103KC
COMP	C811		nsp	00MDK96103300	CER. CAP.	0.01UF 50V KC	CCUS1H103KC
COMP	C812		nsp	00MOA10701620	ELECT CAP.	100UF 16V	CCEA1CH101T
COMP	C813		nsp	00MOA10701620	ELECT CAP.	100UF 16V	CCEA1CH101T
COMP	C814		nsp	00MDK96103300	CER. CAP.	0.01UF 50V KC	CCUS1H103KC
COMP	C815		nsp	00MDK96103300	CER. CAP.	0.01UF 50V KC	CCUS1H103KC
COMP	C819		nsp	00MDK96103300	CER. CAP.	0.01UF 50V KC	CCUS1H103KC
COMP	C840		nsp	00MDK96102300	CER. CAP.	1000PF 50V KC	CCUS1H102KC
COMP	C841		nsp	00MDK96102300	CER. CAP.	1000PF 50V KC	CCUS1H102KC
COMP	C842		nsp	00MDK96102300	CER. CAP.	1000PF 50V KC	CCUS1H102KC
COMP	C843		nsp	00MDK96102300	CER. CAP.	1000PF 50V KC	CCUS1H102KC
COMP	C844		nsp	00MDK96102300	CER. CAP.	1000PF 50V KC	CCUS1H102KC
COMP	C845		nsp	00MDK96102300	CER. CAP.	1000PF 50V KC	CCUS1H102KC
COMP	C846		nsp	00MDK96102300	CER. CAP.	1000PF 50V KC	CCUS1H102KC
COMP	C847		nsp	00MDK96102300	CER. CAP.	1000PF 50V KC	CCUS1H102KC
COMP	C851		nsp	00MOA10605020	ELECT CAP.	10UF 50V	CCEA1HH100T
COMP	C852		nsp	00MOA10605020	ELECT CAP.	10UF 50V	CCEA1HH100T
COMP	C853		nsp	00MOA10605020	ELECT CAP.	10UF 50V	CCEA1HH100T
COMP	C854		nsp	00MOA10605020	ELECT CAP.	10UF 50V	CCEA1HH100T
COMP	C856		nsp	00MOA10605020	ELECT CAP.	10UF 50V	CCEA1HH100T
COMP	C857		nsp	00MOA10605020	ELECT CAP.	10UF 50V	CCEA1HH100T
COMP	C858		nsp	00MOA10605020	ELECT CAP.	10UF 50V	CCEA1HH100T
COMP	C859		nsp	00MOA10605020	ELECT CAP.	10UF 50V	CCEA1HH100T
COMP	C860		nsp	00MOA10605020	ELECT CAP.	10UF 50V	CCEA1HH100T
COMP	C861		nsp	00MOA10605020	ELECT CAP.	10UF 50V	CCEA1HH100T
COMP	C862		nsp	00MOA10605020	ELECT CAP.	10UF 50V	CCEA1HH100T
COMP	C863		nsp	00MOA10605020	ELECT CAP.	10UF 50V	CCEA1HH100T
COMP	C901		nsp	00MOA47602520	ELECT CAP.	47UF 25V	CCEA1EH470T
COMP	C902		nsp	00MOA47602520	ELECT CAP.	47UF 25V	CCEA1EH470T

NOTE : "nsp" PART IS LISTED FOR REFERENCE ONLY, MARANTZ WILL NOT SUPPLY THESE PARTS.

P.W.B. NAME	POS. NO.	VERS. COLOR	PART NO. (FOR EUR)	PART NO. (MZ)	PART NAME	DESCRIPTION	
COMP	C903		nsp	00MOA47602520	ELECT CAP.	47UF 25V	CCEA1EH470T
COMP	C904		nsp	00MOA47602520	ELECT CAP.	47UF 25V	CCEA1EH470T
COMP	C905		nsp	00MOA47602520	ELECT CAP.	47UF 25V	CCEA1EH470T
COMP	C906		nsp	00MOA47602520	ELECT CAP.	47UF 25V	CCEA1EH470T
COMP	C907		nsp	00MDK96103300	CER. CAP.	0.01UF 50V KC	CCUS1H103KC
COMP	C908		nsp	00MOA47602520	ELECT CAP.	47UF 25V	CCEA1EH470T
COMP	C909		nsp	00MOA47602520	ELECT CAP.	47UF 25V	CCEA1EH470T
COMP	C910		nsp	00MDK96103300	CER. CAP.	0.01UF 50V KC	CCUS1H103KC
COMP	C911		nsp	00MOA47602520	ELECT CAP.	47UF 25V	CCEA1EH470T
COMP	C912		nsp	00MDK96103300	CER. CAP.	0.01UF 50V KC	CCUS1H103KC
COMP	C913		nsp	00MOA47602520	ELECT CAP.	47UF 25V	CCEA1EH470T
COMP	C914		nsp	00MDK96103300	CER. CAP.	0.01UF 50V KC	CCUS1H103KC
COMP	C915		nsp	00MOA47602520	ELECT CAP.	47UF 25V	CCEA1EH470T
COMP	C916		nsp	00MOA47602520	ELECT CAP.	47UF 25V	CCEA1EH470T
COMP	C917		nsp	00MOA47602520	ELECT CAP.	47UF 25V	CCEA1EH470T
COMP	C918		nsp	00MDK96103300	CER. CAP.	0.01UF 50V KC	CCUS1H103KC
COMP	C919		nsp	00MOA47602520	ELECT CAP.	47UF 25V	CCEA1EH470T
COMP	C920		nsp	00MOA47602520	ELECT CAP.	47UF 25V	CCEA1EH470T
COMP	C921		nsp	00MDK96103300	CER. CAP.	0.01UF 50V KC	CCUS1H103KC
COMP	C922		nsp	00MOA47602520	ELECT CAP.	47UF 25V	CCEA1EH470T
COMP	C923		nsp	00MDK96103300	CER. CAP.	0.01UF 50V KC	CCUS1H103KC
COMP	C924		nsp	00MOA47602520	ELECT CAP.	47UF 25V	CCEA1EH470T
COMP	C925		nsp	00MDK96103300	CER. CAP.	0.01UF 50V KC	CCUS1H103KC
COMP	C926		nsp	00MOA47602520	ELECT CAP.	47UF 25V	CCEA1EH470T
COMP	C927		nsp	00MOA47602520	ELECT CAP.	47UF 25V	CCEA1EH470T
COMP	C928		nsp	00MOA47602520	ELECT CAP.	47UF 25V	CCEA1EH470T
COMP	C929		nsp	00MDK96103300	CER. CAP.	0.01UF 50V KC	CCUS1H103KC
COMP	C930		nsp	00MOA47602520	ELECT CAP.	47UF 25V	CCEA1EH470T
COMP	C931		nsp	00MOA47602520	ELECT CAP.	47UF 25V	CCEA1EH470T
COMP	C932		nsp	00MDK96103300	CER. CAP.	0.01UF 50V KC	CCUS1H103KC
COMP	C933		nsp	00MOA47602520	ELECT CAP.	47UF 25V	CCEA1EH470T
COMP	C934		nsp	00MDK96103300	CER. CAP.	0.01UF 50V KC	CCUS1H103KC
COMP	C935		nsp	00MOA47602520	ELECT CAP.	47UF 25V	CCEA1EH470T
COMP	C936		nsp	00MDK96103300	CER. CAP.	0.01UF 50V KC	CCUS1H103KC
COMP	C937		nsp	00MOA47701020	ELECT CAP.	470UF 10V	CCEA1AH471T
COMP	C938		nsp	00MDK96103300	CER. CAP.	0.01UF 50V KC	CCUS1H103KC
COMP	C939		nsp	00MOA47701020	ELECT CAP.	470UF 10V	CCEA1AH471T
COMP	C940		nsp	00MDK96103300	CER. CAP.	0.01UF 50V KC	CCUS1H103KC
COMP	C941		nsp	00MOA47701020	ELECT CAP.	470UF 10V	CCEA1AH471T
COMP	C942		nsp	00MDK96103300	CER. CAP.	0.01UF 50V KC	CCUS1H103KC
COMP	C943		nsp	00MDK96103300	CER. CAP.	0.01UF 50V KC	CCUS1H103KC
COMP	C944		nsp	00MOA47602520	ELECT CAP.	47UF 25V	CCEA1EH470T
COMP	C945		nsp	00MDK96103300	CER. CAP.	0.01UF 50V KC	CCUS1H103KC
COMP	C946		nsp	00MDK96103300	CER. CAP.	0.01UF 50V KC	CCUS1H103KC
COMP	C947		nsp	00MOA10701620	ELECT CAP.	100UF 16V	CCEA1CH101T
COMP	C948		nsp	00MDK96103300	CER. CAP.	0.01UF 50V KC	CCUS1H103KC
COMP	C949		nsp	00MOA10701620	ELECT CAP.	100UF 16V	CCEA1CH101T
COMP	C950		nsp	00MDK96103300	CER. CAP.	0.01UF 50V KC	CCUS1H103KC
COMP	C951		nsp	00MOA47602520	ELECT CAP.	47UF 25V	CCEA1EH470T
COMP	C952		nsp	00MOA47602520	ELECT CAP.	47UF 25V	CCEA1EH470T
COMP	C953		nsp	00MDK96103300	CER. CAP.	0.01UF 50V KC	CCUS1H103KC
COMP	C954		nsp	00MOA47602520	ELECT CAP.	47UF 25V	CCEA1EH470T
COMP	C955		nsp	00MOA47602520	ELECT CAP.	47UF 25V	CCEA1EH470T
COMP	C956		nsp	00MOA47602520	ELECT CAP.	47UF 25V	CCEA1EH470T
COMP	C957		nsp	00MOA47602520	ELECT CAP.	47UF 25V	CCEA1EH470T
COMP	C961		nsp	00MOA47602520	ELECT CAP.	47UF 25V	CCEA1EH470T
COMP	C962		nsp	00MOA47602520	ELECT CAP.	47UF 25V	CCEA1EH470T
COMP	C963		nsp	00MOA47602520	ELECT CAP.	47UF 25V	CCEA1EH470T
COMP	C964		nsp	00MOA47602520	ELECT CAP.	47UF 25V	CCEA1EH470T
COMP	C965		nsp	00MOA47602520	ELECT CAP.	47UF 25V	CCEA1EH470T
COMP	C966		nsp	00MOA47602520	ELECT CAP.	47UF 25V	CCEA1EH470T
COMP	C967		nsp	00MOA47602520	ELECT CAP.	47UF 25V	CCEA1EH470T
COMP	C968		nsp	00MOA47602520	ELECT CAP.	47UF 25V	CCEA1EH470T
COMP	C969		nsp	00MOA47602520	ELECT CAP.	47UF 25V	CCEA1EH470T
COMP	C970		nsp	00MOA47602520	ELECT CAP.	47UF 25V	CCEA1EH470T
COMP	C971		nsp	00MDK96103300	CER. CAP.	0.01UF 50V KC	CCUS1H103KC
COMP	C972		nsp	00MDK96103300	CER. CAP.	0.01UF 50V KC	CCUS1H103KC

NOTE : "nsp" PART IS LISTED FOR REFERENCE ONLY, MARANTZ WILL NOT SUPPLY THESE PARTS.

P.W.B. NAME	POS. NO.	VERS. COLOR	PART NO. (FOR EUR)	PART NO. (MZ)	PART NAME	DESCRIPTION	
COMP	C973		nsp	00MDK96103300	CER. CAP.	0.01UF 50V KC	CCUS1H103KC
COMP	C974		nsp	00MDK96103300	CER. CAP.	0.01UF 50V KC	CCUS1H103KC
COMP	C975		nsp	00MDK96103300	CER. CAP.	0.01UF 50V KC	CCUS1H103KC
COMP	C976		nsp	00MDK96103300	CER. CAP.	0.01UF 50V KC	CCUS1H103KC
COMP	C977		nsp	00MOA10701620	ELECT CAP.	100UF 16V	CCEA1CH101T
COMP	C978		nsp	00MOA10701620	ELECT CAP.	100UF 16V	CCEA1CH101T
COMP	C979		nsp	00MOA47701020	ELECT CAP.	470UF 10V	CCEA1AH471T
COMP	C980		nsp	00MOA47701020	ELECT CAP.	470UF 10V	CCEA1AH471T
COMP	C981		nsp	00MOA47701020	ELECT CAP.	470UF 10V	CCEA1AH471T
COMP	C982		nsp	00MDK96103300	CER. CAP.	0.01UF 50V KC	CCUS1H103KC
COMP	C983		nsp	00MDK96103300	CER. CAP.	0.01UF 50V KC	CCUS1H103KC
COMP	C984		nsp	00MDK96103300	CER. CAP.	0.01UF 50V KC	CCUS1H103KC
COMP	C986		nsp	00MOA47602520	ELECT CAP.	47UF 25V	CCEA1EH470T
COMP	C987		nsp	00MOA47602520	ELECT CAP.	47UF 25V	CCEA1EH470T
COMP	C988		nsp	00MDK96103300	CER. CAP.	0.01UF 50V KC	CCUS1H103KC
COMP	C989		nsp	00MOA47602520	ELECT CAP.	47UF 25V	CCEA1EH470T
COMP	C990		nsp	00MDK96103300	CER. CAP.	0.01UF 50V KC	CCUS1H103KC
COMP	C991		nsp	00MOA47602520	ELECT CAP.	47UF 25V	CCEA1EH470T
COMP	C992		nsp	00MDK96103300	CER. CAP.	0.01UF 50V KC	CCUS1H103KC
COMP	C993		nsp	00MOA47602520	ELECT CAP.	47UF 25V	CCEA1EH470T
COMP	C994		nsp	00MDK96103300	CER. CAP.	0.01UF 50V KC	CCUS1H103KC
COMP	C995		nsp	00MOA47602520	ELECT CAP.	47UF 25V	CCEA1EH470T
COMP	C996		nsp	00MOA47602520	ELECT CAP.	47UF 25V	CCEA1EH470T
COMP	C997		nsp	00MDK96103300	CER. CAP.	0.01UF 50V KC	CCUS1H103KC
COMP	C998		nsp	00MOA47602520	ELECT CAP.	47UF 25V	CCEA1EH470T
COMP	C999		nsp	00MDK96103300	CER. CAP.	0.01UF 50V KC	CCUS1H103KC
COMP	CN41		nsp	nsp	CONN.	17P WAFER CARD CABLE	CJP17GA117ZY
COMP	CN42		nsp	nsp	CONN.	CARDCABLE	CJP11GA117ZY
COMP	CN43		nsp	nsp	CONN.	STRAIGHT, 2PIN	CJP02GA01ZY
COMP	IC91		90M-HC109830R	90M-HC109830R	IC	NJM2584M	HVINJM2584MTE1
COMP	IC92		90M-HC109830R	90M-HC109830R	IC	NJM2584M	HVINJM2584MTE1
COMP	IC93		90M-HC109830R	90M-HC109830R	IC	NJM2584M	HVINJM2584MTE1
COMP	IC94		00MHC10236090	00MHC10236090	IC	NJM2586AM	HVINJM2586AMTE1
COMP	IC95		00MHC10239090	00MHC10239090	IC	NJM2581M	HVINJM2581MTE1
COMP	IC96		90M-HC109830R	90M-HC109830R	IC	NJM2584M	HVINJM2584MTE1
COMP	IC97		90M-HC109830R	90M-HC109830R	IC	NJM2584M	HVINJM2584MTE1
COMP	IC98		90M-HC109830R	90M-HC109830R	IC	NJM2584M	HVINJM2584MTE1
COMP	IC99		00MHC10236090	00MHC10236090	IC	NJM2586AM	HVINJM2586AMTE1
COMP	JK91		90M-YT004360R	90M-YT004360R	TERMINAL	JACK BOARD GOLD PLATE	CJJ4R046Z
COMP	JK92		90M-YT004360R	90M-YT004360R	TERMINAL	JACK BOARD GOLD PLATE	CJJ4R046Z
COMP	JK93		90M-YT004360R	90M-YT004360R	TERMINAL	JACK BOARD GOLD PLATE	CJJ4R046Z
COMP	Q851		90M-HT800110R	90M-HT800110R	TRS.	KTC4075GR	HVTKTC4075GR
COMP	Q852		90M-HT800110R	90M-HT800110R	TRS.	KTC4075GR	HVTKTC4075GR
COMP	Q853		90M-HT800110R	90M-HT800110R	TRS.	KTC4075GR	HVTKTC4075GR
COMP	Q854		90M-HT800110R	90M-HT800110R	TRS.	KTC4075GR	HVTKTC4075GR
COMP	Q855		90M-HT800110R	90M-HT800110R	TRS.	KTC4075GR	HVTKTC4075GR
COMP	Q856		90M-HT800110R	90M-HT800110R	TRS.	KTC4075GR	HVTKTC4075GR
COMP	Q857		90M-HT800110R	90M-HT800110R	TRS.	KTC4075GR	HVTKTC4075GR
COMP	Q858		90M-HT800110R	90M-HT800110R	TRS.	KTC4075GR	HVTKTC4075GR
COMP	Q859		90M-HT800110R	90M-HT800110R	TRS.	KTC4075GR	HVTKTC4075GR
COMP	Q860		90M-HT800110R	90M-HT800110R	TRS.	KTC4075GR	HVTKTC4075GR
COMP	Q861		90M-HT800110R	90M-HT800110R	TRS.	KTC4075GR	HVTKTC4075GR
COMP	Q862		90M-HT800110R	90M-HT800110R	TRS.	KTC4075GR	HVTKTC4075GR
COMP	R851		nsp	00MNN05223610	CHIP RES.	22K OHM 1/10W J	CRJ10DJ223T
COMP	R852		nsp	00MNN05223610	CHIP RES.	22K OHM 1/10W J	CRJ10DJ223T
COMP	R853		nsp	00MNN05102610	CHIP RES.	1K OHM 1/10W J	CRJ10DJ102T
COMP	R854		nsp	00MNN05223610	CHIP RES.	22K OHM 1/10W J	CRJ10DJ223T
COMP	R855		nsp	00MNN05223610	CHIP RES.	22K OHM 1/10W J	CRJ10DJ223T
COMP	R856		nsp	00MNN05102610	CHIP RES.	1K OHM 1/10W J	CRJ10DJ102T
COMP	R857		nsp	00MNN05223610	CHIP RES.	22K OHM 1/10W J	CRJ10DJ223T
COMP	R858		nsp	00MNN05223610	CHIP RES.	22K OHM 1/10W J	CRJ10DJ223T
COMP	R859		nsp	00MNN05102610	CHIP RES.	1K OHM 1/10W J	CRJ10DJ102T
COMP	R860		nsp	00MNN05223610	CHIP RES.	22K OHM 1/10W J	CRJ10DJ223T
COMP	R861		nsp	00MNN05223610	CHIP RES.	22K OHM 1/10W J	CRJ10DJ223T
COMP	R862		nsp	00MNN05102610	CHIP RES.	1K OHM 1/10W J	CRJ10DJ102T
COMP	R863		nsp	00MNN05223610	CHIP RES.	22K OHM 1/10W J	CRJ10DJ223T
COMP	R864		nsp	00MNN05223610	CHIP RES.	22K OHM 1/10W J	CRJ10DJ223T

NOTE : "nsp" PART IS LISTED FOR REFERENCE ONLY, MARANTZ WILL NOT SUPPLY THESE PARTS.

P.W.B. NAME	POS. NO.	VERS. COLOR	PART NO. (FOR EUR)	PART NO. (MZ)	PART NAME	DESCRIPTION	
COMP	R865		nsp	00MNN05102610	CHIP RES.	1K OHM 1/10W J	CRJ10DJ102T
COMP	R866		nsp	00MNN05223610	CHIP RES.	22K OHM 1/10W J	CRJ10DJ223T
COMP	R867		nsp	00MNN05223610	CHIP RES.	22K OHM 1/10W J	CRJ10DJ223T
COMP	R868		nsp	00MNN05102610	CHIP RES.	1K OHM 1/10W J	CRJ10DJ102T
COMP	R869		nsp	00MNN05223610	CHIP RES.	22K OHM 1/10W J	CRJ10DJ223T
COMP	R870		nsp	00MNN05223610	CHIP RES.	22K OHM 1/10W J	CRJ10DJ223T
COMP	R871		nsp	00MNN05102610	CHIP RES.	1K OHM 1/10W J	CRJ10DJ102T
COMP	R872		nsp	00MNN05223610	CHIP RES.	22K OHM 1/10W J	CRJ10DJ223T
COMP	R873		nsp	00MNN05223610	CHIP RES.	22K OHM 1/10W J	CRJ10DJ223T
COMP	R874		nsp	00MNN05102610	CHIP RES.	1K OHM 1/10W J	CRJ10DJ102T
COMP	R875		nsp	00MNN05223610	CHIP RES.	22K OHM 1/10W J	CRJ10DJ223T
COMP	R876		nsp	00MNN05223610	CHIP RES.	22K OHM 1/10W J	CRJ10DJ223T
COMP	R877		nsp	00MNN05102610	CHIP RES.	1K OHM 1/10W J	CRJ10DJ102T
COMP	R878		nsp	00MNN05223610	CHIP RES.	22K OHM 1/10W J	CRJ10DJ223T
COMP	R879		nsp	00MNN05223610	CHIP RES.	22K OHM 1/10W J	CRJ10DJ223T
COMP	R880		nsp	00MNN05102610	CHIP RES.	1K OHM 1/10W J	CRJ10DJ102T
COMP	R881		nsp	00MNN05223610	CHIP RES.	22K OHM 1/10W J	CRJ10DJ223T
COMP	R882		nsp	00MNN05223610	CHIP RES.	22K OHM 1/10W J	CRJ10DJ223T
COMP	R883		nsp	00MNN05102610	CHIP RES.	1K OHM 1/10W J	CRJ10DJ102T
COMP	R884		nsp	00MNN05223610	CHIP RES.	22K OHM 1/10W J	CRJ10DJ223T
COMP	R885		nsp	00MNN05223610	CHIP RES.	22K OHM 1/10W J	CRJ10DJ223T
COMP	R886		nsp	00MNN05102610	CHIP RES.	1K OHM 1/10W J	CRJ10DJ102T
COMP	R901		nsp	00MNN05750610	CHIP RES.	75 OHM 1/10W J	CRJ10DJ750T
COMP	R902		nsp	00MNN05750610	CHIP RES.	75 OHM 1/10W J	CRJ10DJ750T
COMP	R903		nsp	00MNN05750610	CHIP RES.	75 OHM 1/10W J	CRJ10DJ750T
COMP	R904		nsp	00MNN05105610	CHIP RES.	1M OHM 1/10W J	CRJ10DJ105T
COMP	R905		nsp	00MNN05105610	CHIP RES.	1M OHM 1/10W J	CRJ10DJ105T
COMP	R906		nsp	00MNN05750610	CHIP RES.	75 OHM 1/10W J	CRJ10DJ750T
COMP	R907		nsp	00MNN05750610	CHIP RES.	75 OHM 1/10W J	CRJ10DJ750T
COMP	R908		nsp	00MNN05750610	CHIP RES.	75 OHM 1/10W J	CRJ10DJ750T
COMP	R911		nsp	00MNN05750610	CHIP RES.	75 OHM 1/10W J	CRJ10DJ750T
COMP	R912		nsp	00MNN05750610	CHIP RES.	75 OHM 1/10W J	CRJ10DJ750T
COMP	R913		nsp	00MNN05750610	CHIP RES.	75 OHM 1/10W J	CRJ10DJ750T
COMP	R914		nsp	00MNN05105610	CHIP RES.	1M OHM 1/10W J	CRJ10DJ105T
COMP	R915		nsp	00MNN05105610	CHIP RES.	1M OHM 1/10W J	CRJ10DJ105T
COMP	R921		nsp	00MNN05750610	CHIP RES.	75 OHM 1/10W J	CRJ10DJ750T
COMP	R922		nsp	00MNN05750610	CHIP RES.	75 OHM 1/10W J	CRJ10DJ750T
COMP	R923		nsp	00MNN05750610	CHIP RES.	75 OHM 1/10W J	CRJ10DJ750T
COMP	R924		nsp	00MNN05105610	CHIP RES.	1M OHM 1/10W J	CRJ10DJ105T
COMP	R925		nsp	00MNN05105610	CHIP RES.	1M OHM 1/10W J	CRJ10DJ105T
COMP	R930		nsp	00MNN05105610	CHIP RES.	1M OHM 1/10W J	CRJ10DJ105T
COMP	R931		nsp	00MNN05750610	CHIP RES.	75 OHM 1/10W J	CRJ10DJ750T
COMP	R932		nsp	00MNN05750610	CHIP RES.	75 OHM 1/10W J	CRJ10DJ750T
COMP	R933		nsp	00MNN05750610	CHIP RES.	75 OHM 1/10W J	CRJ10DJ750T
COMP	R934		nsp	00MNN05105610	CHIP RES.	1M OHM 1/10W J	CRJ10DJ105T
COMP	R935		nsp	00MNN05105610	CHIP RES.	1M OHM 1/10W J	CRJ10DJ105T
COMP	R936		nsp	00MNN05105610	CHIP RES.	1M OHM 1/10W J	CRJ10DJ105T
COMP	R939		nsp	00MNN05105610	CHIP RES.	1M OHM 1/10W J	CRJ10DJ105T
COMP	R940		nsp	00MNN05105610	CHIP RES.	1M OHM 1/10W J	CRJ10DJ105T
COMP	R941		nsp	00MNN05105610	CHIP RES.	1M OHM 1/10W J	CRJ10DJ105T
COMP	R942		nsp	00MNN05105610	CHIP RES.	1M OHM 1/10W J	CRJ10DJ105T
COMP	R943		nsp	00MNN05105610	CHIP RES.	1M OHM 1/10W J	CRJ10DJ105T
COMP	R944		nsp	00MNN05105610	CHIP RES.	1M OHM 1/10W J	CRJ10DJ105T
COMP	R945		nsp	00MNN05105610	CHIP RES.	1M OHM 1/10W J	CRJ10DJ105T
COMP	R946		nsp	00MNN05105610	CHIP RES.	1M OHM 1/10W J	CRJ10DJ105T
COMP	R947		nsp	00MNN05750610	CHIP RES.	75 OHM 1/10W J	CRJ10DJ750T
COMP	R948		nsp	00MNN05750610	CHIP RES.	75 OHM 1/10W J	CRJ10DJ750T
COMP	R949		nsp	00MNN05750610	CHIP RES.	75 OHM 1/10W J	CRJ10DJ750T
COMP	R952		nsp	00MNN05750610	CHIP RES.	75 OHM 1/10W J	CRJ10DJ750T
COMP	R953		nsp	00MNN05750610	CHIP RES.	75 OHM 1/10W J	CRJ10DJ750T
COMP	R954		nsp	00MNN05750610	CHIP RES.	75 OHM 1/10W J	CRJ10DJ750T
COMP	R955		nsp	00MNN05471610	CHIP RES.	470 OHM 1/10W J	CRJ10DJ471T
COMP	R956		nsp	00MNN05471610	CHIP RES.	470 OHM 1/10W J	CRJ10DJ471T
COMP	R957		nsp	00MNN05471610	CHIP RES.	470 OHM 1/10W J	CRJ10DJ471T
COMP	R958		nsp	00MNN05471610	CHIP RES.	470 OHM 1/10W J	CRJ10DJ471T
COMP	R959		nsp	00MNN05471610	CHIP RES.	470 OHM 1/10W J	CRJ10DJ471T
COMP	R960		nsp	00MNN05471610	CHIP RES.	470 OHM 1/10W J	CRJ10DJ471T

NOTE : "nsp" PART IS LISTED FOR REFERENCE ONLY, MARANTZ WILL NOT SUPPLY THESE PARTS.

P.W.B. NAME	POS. NO.	VERS. COLOR	PART NO. (FOR EUR)	PART NO. (MZ)	PART NAME	DESCRIPTION	
COMP	R961		nsp	00MNN05470610	CHIP RES.	47 OHM 1/10W J	CRJ10DJ470T
COMP	R962		nsp	00MNN05470610	CHIP RES.	47 OHM 1/10W J	CRJ10DJ470T
COMP	R963		nsp	00MNN05470610	CHIP RES.	47 OHM 1/10W J	CRJ10DJ470T
COMP	R964		nsp	00MNN05470610	CHIP RES.	47 OHM 1/10W J	CRJ10DJ470T
COMP	R965		nsp	00MNN05470610	CHIP RES.	47 OHM 1/10W J	CRJ10DJ470T
COMP	R966		nsp	00MNN05470610	CHIP RES.	47 OHM 1/10W J	CRJ10DJ470T
COMP	R967		nsp	00MNN05470610	CHIP RES.	47 OHM 1/10W J	CRJ10DJ470T
COMP	R968		nsp	00MNN05470610	CHIP RES.	47 OHM 1/10W J	CRJ10DJ470T
COMP	R969		nsp	00MNN05470610	CHIP RES.	47 OHM 1/10W J	CRJ10DJ470T
COMP	R970		nsp	00MNN05470610	CHIP RES.	47 OHM 1/10W J	CRJ10DJ470T
COMP	R971		nsp	00MNN05470610	CHIP RES.	47 OHM 1/10W J	CRJ10DJ470T
COMP	R972		nsp	00MNN05470610	CHIP RES.	47 OHM 1/10W J	CRJ10DJ470T
COMP	R973		nsp	00MNN05750610	CHIP RES.	75 OHM 1/10W J	CRJ10DJ750T
COMP	R974		nsp	00MNN05471610	CHIP RES.	470 OHM 1/10W J	CRJ10DJ471T
COMP	R975		nsp	00MNN05471610	CHIP RES.	470 OHM 1/10W J	CRJ10DJ471T
COMP	R976		nsp	00MNN05471610	CHIP RES.	470 OHM 1/10W J	CRJ10DJ471T
COMP	R977		nsp	00MNN05471610	CHIP RES.	470 OHM 1/10W J	CRJ10DJ471T
COMP	R978		nsp	00MNN05470610	CHIP RES.	47 OHM 1/10W J	CRJ10DJ470T
COMP	R979		nsp	00MNN05470610	CHIP RES.	47 OHM 1/10W J	CRJ10DJ470T
COMP	R980		nsp	00MNN05470610	CHIP RES.	47 OHM 1/10W J	CRJ10DJ470T
COMP	R981		nsp	00MNN05470610	CHIP RES.	47 OHM 1/10W J	CRJ10DJ470T
COMP	R982		nsp	00MNN05470610	CHIP RES.	47 OHM 1/10W J	CRJ10DJ470T
COMP	R983		nsp	00MNN05470610	CHIP RES.	47 OHM 1/10W J	CRJ10DJ470T
COMP	R984		nsp	00MNN05471610	CHIP RES.	470 OHM 1/10W J	CRJ10DJ471T
COMP	R985		nsp	00MNN05471610	CHIP RES.	470 OHM 1/10W J	CRJ10DJ471T
COMP	R986		nsp	00MNN05471610	CHIP RES.	470 OHM 1/10W J	CRJ10DJ471T
COMP	R987		nsp	00MNN05471610	CHIP RES.	470 OHM 1/10W J	CRJ10DJ471T
					DSP PWB (CUP11872Z)		
DSP	BN38		nsp	nsp	CORD	WIRE ASSY	CWZSR7001BN38
DSP	BN51		nsp	nsp	CORD	WIRE ASSY	CWB1C905500EN
DSP	BN52	/U1B	nsp	nsp	CORD	WIRE ASSY	CWB1C902200EN
DSP	BN90		nsp	nsp	CORD	WIRE ASSY	CWB1B904200EN
DSP	C100		nsp	00MDD95101300	CER. CAP.	100PF 50V JA	CCUS1H101JA
DSP	C101		nsp	00MDK96104300	CER. CAP.	0.1UF 25V ZF	CCUS1E104ZF
DSP	C102		nsp	00MOA22605020	ELECT CAP.	22UF 50V	CCEA1HH220T
DSP	C103		nsp	00MOA10605020	ELECT CAP.	10UF 50V	CCEA1HH100T
DSP	C104		nsp	00MOA22605020	ELECT CAP.	22UF 50V	CCEA1HH220T
DSP	C105		nsp	00MOA22605020	ELECT CAP.	22UF 50V	CCEA1HH220T
DSP	C106		nsp	00MDK96104300	CER. CAP.	0.1UF 25V ZF	CCUS1E104ZF
DSP	C107		nsp	00MOA10701620	ELECT CAP.	100UF 16V	CCEA1CH101T
DSP	C108		nsp	00MDK96272300	CER. CAP.	2700PF 50V KC	CCUS1H272KC
DSP	C109		nsp	00MDK96104300	CER. CAP.	0.1UF 25V ZF	CCUS1E104ZF
DSP	C110		nsp	00MOA22605020	ELECT CAP.	22UF 50V	CCEA1HH220T
DSP	C111		nsp	00MDK96104300	CER. CAP.	0.1UF 25V ZF	CCUS1E104ZF
DSP	C112		nsp	00MDK96272300	CER. CAP.	2700PF 50V KC	CCUS1H272KC
DSP	C113		nsp	00MDD95151300	CER. CAP.	150PF 50V JA	CCUS1H151JA
DSP	C114		nsp	00MDK96104300	CER. CAP.	0.1UF 25V ZF	CCUS1E104ZF
DSP	C115		nsp	00MDK96104300	CER. CAP.	0.1UF 25V ZF	CCUS1E104ZF
DSP	C116		nsp	00MDK96104300	CER. CAP.	0.1UF 25V ZF	CCUS1E104ZF
DSP	C117		nsp	00MOA22605020	ELECT CAP.	22UF 50V	CCEA1HH220T
DSP	C118		nsp	00MDD95101300	CER. CAP.	100PF 50V JA	CCUS1H101JA
DSP	C119		nsp	00MOA47602520	ELECT CAP.	47UF 25V	CCEA1EH470T
DSP	C120		nsp	00MOA10505020	ELECT CAP.	1UF 50V	CCEA1HH1R0T
DSP	C121		nsp	00MDK96104300	CER. CAP.	0.1UF 25V ZF	CCUS1E104ZF
DSP	C122		nsp	00MDK96104300	CER. CAP.	0.1UF 25V ZF	CCUS1E104ZF
DSP	C123		nsp	00MOA10701620	ELECT CAP.	100UF 16V	CCEA1CH101T
DSP	C124		nsp	00MDK96104300	CER. CAP.	0.1UF 25V ZF	CCUS1E104ZF
DSP	C125		nsp	00MOA22605020	ELECT CAP.	22UF 50V	CCEA1HH220T
DSP	C126		nsp	00MDK96104300	CER. CAP.	0.1UF 25V ZF	CCUS1E104ZF
DSP	C127		nsp	00MDK96104300	CER. CAP.	0.1UF 25V ZF	CCUS1E104ZF
DSP	C128		nsp	00MOA22605020	ELECT CAP.	22UF 50V	CCEA1HH220T
DSP	C129		nsp	00MDK96104300	CER. CAP.	0.1UF 25V ZF	CCUS1E104ZF
DSP	C130		nsp	00MOA22605020	ELECT CAP.	22UF 50V	CCEA1HH220T
DSP	C131		nsp	00MDK96104300	CER. CAP.	0.1UF 25V ZF	CCUS1E104ZF
DSP	C132		nsp	00MDK96104300	CER. CAP.	0.1UF 25V ZF	CCUS1E104ZF
DSP	C133		nsp	00MDK96104300	CER. CAP.	0.1UF 25V ZF	CCUS1E104ZF
DSP	C134		nsp	00MDK96182300	CER. CAP.	1800PF/50V/1608/X7R	CCUS1H182KC

NOTE : "nsp" PART IS LISTED FOR REFERENCE ONLY, MARANTZ WILL NOT SUPPLY THESE PARTS.

P.W.B. NAME	POS. NO.	VERS. COLOR	PART NO. (FOR EUR)	PART NO. (MZ)	PART NAME	DESCRIPTION	
DSP	C135		nsp	00MDD95331300	CER. CAP.	330PF 50V JA	CCUS1H331JA
DSP	C136		nsp	00MDD95331300	CER. CAP.	330PF 50V JA	CCUS1H331JA
DSP	C137		nsp	00MDK96182300	CER. CAP.	1800PF/50V/1608/X7R	CCUS1H182KC
DSP	C138		nsp	00MDK96182300	CER. CAP.	1800PF/50V/1608/X7R	CCUS1H182KC
DSP	C139		nsp	00MDK96104300	CER. CAP.	0.1UF 25V ZF	CCUS1E104ZF
DSP	C140		nsp	00MDD95101300	CER. CAP.	100PF 50V JA	CCUS1H101JA
DSP	C141		nsp	00MDD95331300	CER. CAP.	330PF 50V JA	CCUS1H331JA
DSP	C142		nsp	90M-OA000230R	ELECT CAP.	22UF 25V	HCEA1EROA220T
DSP	C143		nsp	00MDK96182300	CER. CAP.	1800PF/50V/1608/X7R	CCUS1H182KC
DSP	C144		nsp	00MDK96182300	CER. CAP.	1800PF/50V/1608/X7R	CCUS1H182KC
DSP	C145		nsp	90M-OA000230R	ELECT CAP.	22UF 25V	HCEA1EROA220T
DSP	C146		nsp	00MDK96104300	CER. CAP.	0.1UF 25V ZF	CCUS1E104ZF
DSP	C147		nsp	00MDD95151300	CER. CAP.	150PF 50V JA	CCUS1H151JA
DSP	C148		nsp	00MDD95331300	CER. CAP.	330PF 50V JA	CCUS1H331JA
DSP	C149		nsp	00MDD95331300	CER. CAP.	330PF 50V JA	CCUS1H331JA
DSP	C150		nsp	00MDK96104300	CER. CAP.	0.1UF 25V ZF	CCUS1E104ZF
DSP	C151		nsp	90M-OA000230R	ELECT CAP.	22UF 25V	HCEA1EROA220T
DSP	C152		nsp	00MDK96182300	CER. CAP.	1800PF/50V/1608/X7R	CCUS1H182KC
DSP	C153		nsp	00MDK96182300	CER. CAP.	1800PF/50V/1608/X7R	CCUS1H182KC
DSP	C154		nsp	90M-OA000230R	ELECT CAP.	22UF 25V	HCEA1EROA220T
DSP	C155		nsp	00MDD95331300	CER. CAP.	330PF 50V JA	CCUS1H331JA
DSP	C156		nsp	00MDK96104300	CER. CAP.	0.1UF 25V ZF	CCUS1E104ZF
DSP	C157		nsp	00MDK96182300	CER. CAP.	1800PF/50V/1608/X7R	CCUS1H182KC
DSP	C158		nsp	00MDK96182300	CER. CAP.	1800PF/50V/1608/X7R	CCUS1H182KC
DSP	C159		nsp	00MDD95331300	CER. CAP.	330PF 50V JA	CCUS1H331JA
DSP	C160		nsp	00MDD95331300	CER. CAP.	330PF 50V JA	CCUS1H331JA
DSP	C161		nsp	00MDK96182300	CER. CAP.	1800PF/50V/1608/X7R	CCUS1H182KC
DSP	C162		nsp	00MDK96182300	CER. CAP.	1800PF/50V/1608/X7R	CCUS1H182KC
DSP	C163		nsp	00MDD95331300	CER. CAP.	330PF 50V JA	CCUS1H331JA
DSP	C164		nsp	00MDK96104300	CER. CAP.	0.1UF 25V ZF	CCUS1E104ZF
DSP	C165		nsp	90M-OA000230R	ELECT CAP.	22UF 25V	HCEA1EROA220T
DSP	C166		nsp	00MDK96182300	CER. CAP.	1800PF/50V/1608/X7R	CCUS1H182KC
DSP	C167		nsp	00MDK96182300	CER. CAP.	1800PF/50V/1608/X7R	CCUS1H182KC
DSP	C168		nsp	90M-OA000230R	ELECT CAP.	22UF 25V	HCEA1EROA220T
DSP	C169		nsp	00MDD95331300	CER. CAP.	330PF 50V JA	CCUS1H331JA
DSP	C170		nsp	00MDK96104300	CER. CAP.	0.1UF 25V ZF	CCUS1E104ZF
DSP	C171		nsp	00MDK96182300	CER. CAP.	1800PF/50V/1608/X7R	CCUS1H182KC
DSP	C172		nsp	00MDK96182300	CER. CAP.	1800PF/50V/1608/X7R	CCUS1H182KC
DSP	C173		nsp	00MDD95331300	CER. CAP.	330PF 50V JA	CCUS1H331JA
DSP	C174		nsp	00MDD95331300	CER. CAP.	330PF 50V JA	CCUS1H331JA
DSP	C175		nsp	00MDK96182300	CER. CAP.	1800PF/50V/1608/X7R	CCUS1H182KC
DSP	C176		nsp	00MDK96182300	CER. CAP.	1800PF/50V/1608/X7R	CCUS1H182KC
DSP	C177		nsp	00MDD95331300	CER. CAP.	330PF 50V JA	CCUS1H331JA
DSP	C178		nsp	00MDK96104300	CER. CAP.	0.1UF 25V ZF	CCUS1E104ZF
DSP	C179		nsp	90M-OA000230R	ELECT CAP.	22UF 25V	HCEA1EROA220T
DSP	C180		nsp	00MDK96182300	CER. CAP.	1800PF/50V/1608/X7R	CCUS1H182KC
DSP	C181		nsp	00MDK96182300	CER. CAP.	1800PF/50V/1608/X7R	CCUS1H182KC
DSP	C182		nsp	90M-OA000230R	ELECT CAP.	22UF 25V	HCEA1EROA220T
DSP	C183		nsp	00MDD95331300	CER. CAP.	330PF 50V JA	CCUS1H331JA
DSP	C184		nsp	00MDK96104300	CER. CAP.	0.1UF 25V ZF	CCUS1E104ZF
DSP	C185		nsp	00MDK96182300	CER. CAP.	1800PF/50V/1608/X7R	CCUS1H182KC
DSP	C186		nsp	00MDK96182300	CER. CAP.	1800PF/50V/1608/X7R	CCUS1H182KC
DSP	C187		nsp	00MDD95331300	CER. CAP.	330PF 50V JA	CCUS1H331JA
DSP	C188		nsp	00MDD95331300	CER. CAP.	330PF 50V JA	CCUS1H331JA
DSP	C189		nsp	00MOA22605020	ELECT CAP.	22UF 50V	CCEA1HH220T
DSP	C190		nsp	00MDK96182300	CER. CAP.	1800PF/50V/1608/X7R	CCUS1H182KC
DSP	C191		nsp	00MDK96182300	CER. CAP.	1800PF/50V/1608/X7R	CCUS1H182KC
DSP	C192		nsp	00MOA22605020	ELECT CAP.	22UF 50V	CCEA1HH220T
DSP	C195		nsp	00MDK96104300	CER. CAP.	0.1UF 25V ZF	CCUS1E104ZF
DSP	C196		nsp	00MDK96104300	CER. CAP.	0.1UF 25V ZF	CCUS1E104ZF
DSP	C197		nsp	00MDK96104300	CER. CAP.	0.1UF 25V ZF	CCUS1E104ZF
DSP	C198		nsp	00MDK96104300	CER. CAP.	0.1UF 25V ZF	CCUS1E104ZF
DSP	C199		nsp	00MOA10605020	ELECT CAP.	10UF 50V	CCEA1HH100T
DSP	C200		nsp	00MDD95471300	CER. CAP.	470PF 50V JA	CCUS1H471JA
DSP	C201		nsp	00MDD91100300	CER. CAP.	10PF 50V JA	CCUS1H100JA
DSP	C202		nsp	00MDD91100300	CER. CAP.	10PF 50V JA	CCUS1H100JA
DSP	C203		nsp	00MDD95471300	CER. CAP.	470PF 50V JA	CCUS1H471JA

NOTE : "nsp" PART IS LISTED FOR REFERENCE ONLY, MARANTZ WILL NOT SUPPLY THESE PARTS.

P.W.B. NAME	POS. NO.	VERS. COLOR	PART NO. (FOR EUR)	PART NO. (MZ)	PART NAME	DESCRIPTION	
DSP	C204		nsp	00MDK96104300	CER. CAP.	0.1UF 25V ZF	CCUS1E104ZF
DSP	C205		nsp	00MDK96104300	CER. CAP.	0.1UF 25V ZF	CCUS1E104ZF
DSP	C206		nsp	00MDK96104300	CER. CAP.	0.1UF 25V ZF	CCUS1E104ZF
DSP	C207		nsp	00MDK96104300	CER. CAP.	0.1UF 25V ZF	CCUS1E104ZF
DSP	C208		nsp	00MDK96104300	CER. CAP.	0.1UF 25V ZF	CCUS1E104ZF
DSP	C209		nsp	00MDK96104300	CER. CAP.	0.1UF 25V ZF	CCUS1E104ZF
DSP	C210		nsp	00MDK96104300	CER. CAP.	0.1UF 25V ZF	CCUS1E104ZF
DSP	C211		nsp	00MDK96104300	CER. CAP.	0.1UF 25V ZF	CCUS1E104ZF
DSP	C212		nsp	00MDK96104300	CER. CAP.	0.1UF 25V ZF	CCUS1E104ZF
DSP	C213		nsp	00MDK96104300	CER. CAP.	0.1UF 25V ZF	CCUS1E104ZF
DSP	C214		nsp	00MDK96104300	CER. CAP.	0.1UF 25V ZF	CCUS1E104ZF
DSP	C215		nsp	00MDK96104300	CER. CAP.	0.1UF 25V ZF	CCUS1E104ZF
DSP	C216		nsp	00MDK96104300	CER. CAP.	0.1UF 25V ZF	CCUS1E104ZF
DSP	C217		nsp	00MDK96104300	CER. CAP.	0.1UF 25V ZF	CCUS1E104ZF
DSP	C218		nsp	00MDK96104300	CER. CAP.	0.1UF 25V ZF	CCUS1E104ZF
DSP	C219		nsp	00MDK96104300	CER. CAP.	0.1UF 25V ZF	CCUS1E104ZF
DSP	C220		nsp	00MDK96104300	CER. CAP.	0.1UF 25V ZF	CCUS1E104ZF
DSP	C221		nsp	00MDK96104300	CER. CAP.	0.1UF 25V ZF	CCUS1E104ZF
DSP	C222		nsp	00MDK96104300	CER. CAP.	0.1UF 25V ZF	CCUS1E104ZF
DSP	C223		nsp	00MDK96104300	CER. CAP.	0.1UF 25V ZF	CCUS1E104ZF
DSP	C224		nsp	00MDK96104300	CER. CAP.	0.1UF 25V ZF	CCUS1E104ZF
DSP	C225		nsp	00MDK96104300	CER. CAP.	0.1UF 25V ZF	CCUS1E104ZF
DSP	C226		nsp	00MDK96104300	CER. CAP.	0.1UF 25V ZF	CCUS1E104ZF
DSP	C227		nsp	00MDK96104300	CER. CAP.	0.1UF 25V ZF	CCUS1E104ZF
DSP	C228		nsp	00MDK96104300	CER. CAP.	0.1UF 25V ZF	CCUS1E104ZF
DSP	C229		nsp	00MDK96104300	CER. CAP.	0.1UF 25V ZF	CCUS1E104ZF
DSP	C230		nsp	00MDK96104300	CER. CAP.	0.1UF 25V ZF	CCUS1E104ZF
DSP	C231		nsp	00MDK96104300	CER. CAP.	0.1UF 25V ZF	CCUS1E104ZF
DSP	C232		nsp	00MDK96104300	CER. CAP.	0.1UF 25V ZF	CCUS1E104ZF
DSP	C233		nsp	00MDK96104300	CER. CAP.	0.1UF 25V ZF	CCUS1E104ZF
DSP	C234		nsp	00MDK96104300	CER. CAP.	0.1UF 25V ZF	CCUS1E104ZF
DSP	C235		nsp	00MDK96104300	CER. CAP.	0.1UF 25V ZF	CCUS1E104ZF
DSP	C236		nsp	00MDK96104300	CER. CAP.	0.1UF 25V ZF	CCUS1E104ZF
DSP	C237		nsp	00MDK96182300	CER. CAP.	1800PF/50V/1608/X7R	CCUS1H182KC
DSP	C238		nsp	00MDD95101300	CER. CAP.	100PF 50V JA	CCUS1H101JA
DSP	C240		nsp	00MOA22605020	ELECT CAP.	22UF 50V	CCEA1HH220T
DSP	C263		nsp	00MDK96104300	CER. CAP.	0.1UF 25V ZF	CCUS1E104ZF
DSP	C275		nsp	00MDK96103300	CER. CAP.	0.01UF 50V KC	CCUS1H103KC
DSP	C276		nsp	00MDD95330300	CER. CAP.	33PF 50V JA	CCUS1H330JA
DSP	C277		nsp	00MOA47602520	ELECT CAP.	47UF 25V	CCEA1EH470T
DSP	C278		nsp	00MDD95330300	CER. CAP.	33PF 50V JA	CCUS1H330JA
DSP	C279		nsp	00MOA47602520	ELECT CAP.	47UF 25V	CCEA1EH470T
DSP	C280		nsp	00MDK96103300	CER. CAP.	0.01UF 50V KC	CCUS1H103KC
DSP	C281		nsp	00MDD95101300	CER. CAP.	100PF 50V JA	CCUS1H101JA
DSP	C288		nsp	00MDK96104300	CER. CAP.	0.1UF 25V ZF	CCUS1E104ZF
DSP	C307		nsp	00MDD95101300	CER. CAP.	100PF 50V JA	CCUS1H101JA
DSP	C308		nsp	00MDK96104300	CER. CAP.	0.1UF 25V ZF	CCUS1E104ZF
DSP	C310		nsp	00MOA47602520	ELECT CAP.	47UF 25V	CCEA1EH470T
DSP	C311		nsp	00MDK96103300	CER. CAP.	0.01UF 50V KC	CCUS1H103KC
DSP	C312		nsp	00MDK96104300	CER. CAP.	0.1UF 25V ZF	CCUS1E104ZF
DSP	C313		nsp	00MDK96103300	CER. CAP.	0.01UF 50V KC	CCUS1H103KC
DSP	C314		nsp	00MOA47602520	ELECT CAP.	47UF 25V	CCEA1EH470T
DSP	C315		nsp	00MDK96104300	CER. CAP.	0.1UF 25V ZF	CCUS1E104ZF
DSP	C316		nsp	00MDK96104300	CER. CAP.	0.1UF 25V ZF	CCUS1E104ZF
DSP	C318		nsp	00MDK96104300	CER. CAP.	0.1UF 25V ZF	CCUS1E104ZF
DSP	C326		nsp	00MDD95101300	CER. CAP.	100PF 50V JA	CCUS1H101JA
DSP	C327		nsp	00MOA22605020	ELECT CAP.	22UF 50V	CCEA1HH220T
DSP	C328		nsp	00MDK96104300	CER. CAP.	0.1UF 25V ZF	CCUS1E104ZF
DSP	C329		nsp	00MDK96104300	CER. CAP.	0.1UF 25V ZF	CCUS1E104ZF
DSP	C330		nsp	00MDD95120300	CER. CAP.	12PF 50V JA	CCUS1H120JA
DSP	C331		nsp	00MDD9515030R	CER. CAP.	15PF 50V JA	CCUS1H150JA
DSP	C332		nsp	00MOA22605020	ELECT CAP.	22UF 50V	CCEA1HH220T
DSP	C333		nsp	00MDK96104300	CER. CAP.	0.1UF 25V ZF	CCUS1E104ZF
DSP	C334		nsp	00MOA22605020	ELECT CAP.	22UF 50V	CCEA1HH220T
DSP	C335		nsp	00MDK96104300	CER. CAP.	0.1UF 25V ZF	CCUS1E104ZF
DSP	C336		nsp	00MOA22605020	ELECT CAP.	22UF 50V	CCEA1HH220T
DSP	C337		nsp	00MDK96104300	CER. CAP.	0.1UF 25V ZF	CCUS1E104ZF

NOTE : "nsp" PART IS LISTED FOR REFERENCE ONLY, MARANTZ WILL NOT SUPPLY THESE PARTS.

P.W.B. NAME	POS. NO.	VERS. COLOR	PART NO. (FOR EUR)	PART NO. (MZ)	PART NAME	DESCRIPTION	
DSP	C338		nsp	00MDK98223300	CER. CAP.	0.022UF 50V KC	CCUS1H223KC
DSP	C339		nsp	00MDK96104300	CER. CAP.	0.1UF 25V ZF	CCUS1E104ZF
DSP	C340		nsp	00MDK96104300	CER. CAP.	0.1UF 25V ZF	CCUS1E104ZF
DSP	C341		nsp	00MOA22605020	ELECT CAP.	22UF 50V	CCEA1HH220T
DSP	C342		nsp	00MDK96104300	CER. CAP.	0.1UF 25V ZF	CCUS1E104ZF
DSP	C343		nsp	00MDK96104300	CER. CAP.	0.1UF 25V ZF	CCUS1E104ZF
DSP	C371		nsp	00MDD95101300	CER. CAP.	100PF 50V JA	CCUS1H101JA
DSP	C375		nsp	00MDK96104300	CER. CAP.	0.1UF 25V ZF	CCUS1E104ZF
DSP	C376		nsp	nsp	CER. CAP.	0.1UF 50V Z	HCBS1H104ZFT
DSP	C377		nsp	nsp	CER. CAP.	0.1UF 50V Z	HCBS1H104ZFT
DSP	C378		nsp	00MOA47701620	ELECT CAP.	470UF 16V ZF	CCEA1CH471T
DSP	CC10		nsp	00MDK96104300	CER. CAP.	0.1UF 25V ZF	CCUS1E104ZF
DSP	CC11		nsp	00MDK96104300	CER. CAP.	0.1UF 25V ZF	CCUS1E104ZF
DSP	CC12		nsp	00MDD95180300	CER. CAP.	18PF 50V JA	CCUS1H180JA
DSP	CC13		nsp	00MDK96104300	CER. CAP.	0.1UF 25V ZF	CCUS1E104ZF
DSP	CC14		nsp	00MDD95330300	CER. CAP.	33PF 50V JA	CCUS1H330JA
DSP	CC15		nsp	00MDK96103300	CER. CAP.	0.01UF 50V KC	CCUS1H103KC
DSP	CC16		nsp	00MDK96103300	CER. CAP.	0.01UF 50V KC	CCUS1H103KC
DSP	CC17		nsp	00MDD95330300	CER. CAP.	33PF 50V JA	CCUS1H330JA
DSP	CC18		nsp	00MOA47602520	ELECT CAP.	47UF 25V	CCEA1EH470T
DSP	CC19		nsp	00MDK96103300	CER. CAP.	0.01UF 50V KC	CCUS1H103KC
DSP	CC20		nsp	00MDK96103300	CER. CAP.	0.01UF 50V KC	CCUS1H103KC
DSP	CC21		nsp	00MOA22605020	ELECT CAP.	22UF 50V	CCEA1HH220T
DSP	CC22		nsp	00MDK96103300	CER. CAP.	0.01UF 50V KC	CCUS1H103KC
DSP	CC23		nsp	00MDK96103300	CER. CAP.	0.01UF 50V KC	CCUS1H103KC
DSP	CC24		nsp	00MDK96104300	CER. CAP.	0.1UF 25V ZF	CCUS1E104ZF
DSP	CC25		nsp	00MDK96103300	CER. CAP.	0.01UF 50V KC	CCUS1H103KC
DSP	CC26		nsp	00MDK96103300	CER. CAP.	0.01UF 50V KC	CCUS1H103KC
DSP	CC27		nsp	00MDK96104300	CER. CAP.	0.1UF 25V ZF	CCUS1E104ZF
DSP	CC28		nsp	00MOA47602520	ELECT CAP.	47UF 25V	CCEA1EH470T
DSP	CC29		nsp	00MDK96104300	CER. CAP.	0.1UF 25V ZF	CCUS1E104ZF
DSP	CC30		nsp	00MOA47602520	ELECT CAP.	47UF 25V	CCEA1EH470T
DSP	CC31		nsp	00MDK96104300	CER. CAP.	0.1UF 25V ZF	CCUS1E104ZF
DSP	CC32		nsp	00MDK96104300	CER. CAP.	0.1UF 25V ZF	CCUS1E104ZF
DSP	CC33		nsp	00MDD95270300	CER. CAP.	27PF 50V JA	CCUS1H270JA
DSP	CC34		nsp	00MDD95270300	CER. CAP.	27PF 50V JA	CCUS1H270JA
DSP	CC35		nsp	00MDK96104300	CER. CAP.	0.1UF 25V ZF	CCUS1E104ZF
DSP	CC36		nsp	00MOA22605020	ELECT CAP.	22UF 50V	CCEA1HH220T
DSP	CC37		nsp	00MDK98474200	CER. CAP.	0.47UF 16V ZF	CCUS1C474ZF
DSP	CC38		nsp	00MDK96104300	CER. CAP.	0.1UF 25V ZF	CCUS1E104ZF
DSP	CC39		nsp	00MOA22605020	ELECT CAP.	22UF 50V	CCEA1HH220T
DSP	CC40		nsp	00MOA22605020	ELECT CAP.	22UF 50V	CCEA1HH220T
DSP	CC41		nsp	00MDK96104300	CER. CAP.	0.1UF 25V ZF	CCUS1E104ZF
DSP	CC42		nsp	00MDK96104300	CER. CAP.	0.1UF 25V ZF	CCUS1E104ZF
DSP	CC43		nsp	00MOA22605020	ELECT CAP.	22UF 50V	CCEA1HH220T
DSP	CC44		nsp	00MDK96104300	CER. CAP.	0.1UF 25V ZF	CCUS1E104ZF
DSP	CC45		nsp	00MDK96104300	CER. CAP.	0.1UF 25V ZF	CCUS1E104ZF
DSP	CC46		nsp	00MOA22605020	ELECT CAP.	22UF 50V	CCEA1HH220T
DSP	CC47		nsp	00MDK96104300	CER. CAP.	0.1UF 25V ZF	CCUS1E104ZF
DSP	CC48		nsp	00MDK96104300	CER. CAP.	0.1UF 25V ZF	CCUS1E104ZF
DSP	CC49		nsp	00MDK96102300	CER. CAP.	1000PF 50V KC	CCUS1H102KC
DSP	CC50		nsp	00MDK96104300	CER. CAP.	0.1UF 25V ZF	CCUS1E104ZF
DSP	CC51		nsp	00MDK96102300	CER. CAP.	1000PF 50V KC	CCUS1H102KC
DSP	CC52		nsp	00MDK96102300	CER. CAP.	1000PF 50V KC	CCUS1H102KC
DSP	CC53		nsp	00MDK96102300	CER. CAP.	1000PF 50V KC	CCUS1H102KC
DSP	CC54		nsp	00MDK96102300	CER. CAP.	1000PF 50V KC	CCUS1H102KC
DSP	CC55		nsp	00MDK96102300	CER. CAP.	1000PF 50V KC	CCUS1H102KC
DSP	CC56		nsp	00MDK96104300	CER. CAP.	0.1UF 25V ZF	CCUS1E104ZF
DSP	CN16		nsp	nsp	CONN.	21P FPC WAFER	CJP21GA117ZY
DSP	CN19		nsp	nsp	CONN.	STRAIGHT, 3PIN	CJP03GA19ZY
DSP	CN26		nsp	nsp	CONN.	21P FPC WAFER	CJP21GA117ZY
DSP	CN28		nsp	nsp	CONN.	17P WAFER CARD CABLE	CJP17GA115ZY
DSP	CN30		nsp	nsp	CONN.	STRAIGHT 6PIN	CJP12GA19ZY
DSP	CN34	/N1B	nsp	nsp	CONN.	17P WAFER CARD CABLE	CJP17GA115ZY
DSP	CN34	/N1G	nsp	nsp	CONN.	17P WAFER CARD CABLE	CJP17GA115ZY
DSP	CN34	/N1S	nsp	nsp	CONN.	17P WAFER CARD CABLE	CJP17GA115ZY
DSP	CN34	/U1B	nsp	nsp	CONN.	15P CARD CABLE	CJP15GA115ZY

NOTE : "nsp" PART IS LISTED FOR REFERENCE ONLY, MARANTZ WILL NOT SUPPLY THESE PARTS.

P.W.B. NAME	POS. NO.	VERS. COLOR	PART NO. (FOR EUR)	PART NO. (MZ)	PART NAME	DESCRIPTION	
DSP	CN36		nsp	nsp	CONN.	15P CARD CABLE	CJP15GA117ZY
DSP	CN42		nsp	nsp	CONN.	25P CARD CABLE	CJP25GA117ZY
DSP	CN46		nsp	nsp	CONN.	00906-0027 4P STRAIGHT	CJP04GA19ZY
DSP	CN55		nsp	nsp	CORD	WIRE ASSY	CWZSR7001CN55
DSP	CN98	/U1B	nsp	nsp	CONN.	15P CARD CABLE	CJP15GA115ZY
DSP	CR10		nsp	90M-OA000540R	ELECT CAP.	220UF 16V ESR	CCEA1CKXL221T
DSP	CR11		nsp	00MDK96104300	CER. CAP.	0.1UF 25V ZF	CCUS1E104ZF
DSP	CR13		nsp	00MOA10702520	ELECT CAP.	100UF 25V	CCEA1EH101T
DSP	CR14		nsp	00MOA10702520	ELECT CAP.	100UF 25V	CCEA1EH101T
DSP	CR15		nsp	00MDK96104300	CER. CAP.	0.1UF 25V ZF	CCUS1E104ZF
DSP	CR16		nsp	00MDK96104300	CER. CAP.	0.1UF 25V ZF	CCUS1E104ZF
DSP	CR17		nsp	00MOA10605020	ELECT CAP.	10UF 50V	CCEA1HH100T
DSP	CR18		nsp	90M-OA000540R	ELECT CAP.	220UF 16V ESR	CCEA1CKXL221T
DSP	CR19		nsp	00MOA10605020	ELECT CAP.	10UF 50V	CCEA1HH100T
DSP	CR20		nsp	90M-OA000540R	ELECT CAP.	220UF 16V ESR	CCEA1CKXL221T
DSP	CR21		nsp	00MOA10701620	ELECT CAP.	100UF 16V	CCEA1CH101T
DSP	CR22		nsp	00MDK96104300	CER. CAP.	0.1UF 25V ZF	CCUS1E104ZF
DSP	CR23		nsp	00MOA10605020	ELECT CAP.	10UF 50V	CCEA1HH100T
DSP	CR24		nsp	00MOA22701620	ELECT CAP.	220UF 16V	CCEA1CH221T
DSP	CR25		nsp	00MOA10605020	ELECT CAP.	10UF 50V	CCEA1HH100T
DSP	CR26		nsp	00MOA22701620	ELECT CAP.	220UF 16V	CCEA1CH221T
DSP	CR27		nsp	00MDK96102300	CER. CAP.	1000PF 50V KC	CCUS1H102KC
DSP	CR28		nsp	00MDK96104300	CER. CAP.	0.1UF 25V ZF	CCUS1E104ZF
DSP	CR29		nsp	00MDK96104300	CER. CAP.	0.1UF 25V ZF	CCUS1E104ZF
DSP	CR30		nsp	00MOA10701620	ELECT CAP.	100UF 16V	CCEA1CH101T
DSP	CR31		nsp	00MDK96104300	CER. CAP.	0.1UF 25V ZF	CCUS1E104ZF
DSP	CR32		nsp	00MDK96104300	CER. CAP.	0.1UF 25V ZF	CCUS1E104ZF
DSP	CR40		nsp	00MDK96104300	CER. CAP.	0.1UF 25V ZF	CCUS1E104ZF
DSP	CR41		90M-EA000930R	90M-EA000930R	ELECT CAP.	3300UF 16V	CCEA1CH332E
DSP	DC10	/N1B	00MHZ21303210	00MHZ21303210	DIODE	1SS355	CVD1SS355T
DSP	DC10	/N1G	00MHZ21303210	00MHZ21303210	DIODE	1SS355	CVD1SS355T
DSP	DC10	/N1S	00MHZ21303210	00MHZ21303210	DIODE	1SS355	CVD1SS355T
DSP	DC11		00MHZ21303210	00MHZ21303210	DIODE	1SS355	CVD1SS355T
DSP	DC12	/U1B	nsp	00MHZ21303210	DIODE	1SS355	CVD1SS355T
DSP	DC13		00MHZ21303210	00MHZ21303210	DIODE	1SS355	CVD1SS355T
DSP	DC14		00MHZ21303210	00MHZ21303210	DIODE	1SS355	CVD1SS355T
DSP	DC15		00MHZ21303210	00MHZ21303210	DIODE	1SS355	CVD1SS355T
DSP	DC16		nsp	90M-HD201750R	DIODE	1N4003	CVD1N4003SRT
DSP	DC17		00MHZ21303210	00MHZ21303210	DIODE	1SS355	CVD1SS355T
DSP	DC18		00MHZ21303210	00MHZ21303210	DIODE	1SS355	CVD1SS355T
DSP	DC19		90M-HI200020R	90M-HI200020R	L.E.D.	SIR-34ST3F	BVDSIR34ST3F
DSP	DC20		00MHZ21303210	00MHZ21303210	DIODE	1SS355	CVD1SS355T
DSP	DC21		00MHZ21303210	00MHZ21303210	DIODE	1SS355	CVD1SS355T
DSP	DC22		00MHZ21303210	00MHZ21303210	DIODE	1SS355	CVD1SS355T
DSP	DC24	/U1B	nsp	90M-HD201750R	DIODE	1N4003	CVD1N4003SRT
DSP	ET01		nsp	nsp	TERMINAL	EARTH PLATE	CNE75
DSP	ET02		nsp	nsp	TERMINAL	EARTH PLATE	CNE75
DSP	ET03		nsp	nsp	BRACKET	BRACKET SHIELD	CMD1A512
DSP	ET04		nsp	nsp	BUFFER	STOPPER IR SENSOR	CHG1A262
DSP	IC11		90M-HC108910R	90M-HC108910R	IC	74VHC08	HVI74VHC08TTR
DSP	IC12		90M-HW100710R	90M-HW100710R	PHOTO UNIT	PC-17L1CB	HVIPC17L1CB
DSP	IC13		90M-HC108910R	90M-HC108910R	IC	74VHC08	HVI74VHC08TTR
DSP	IC14		90M-HW100690R	90M-HW100690R	PHOTO UNIT	RPM674CBR-S	BRVRPM6936
DSP	IC15	/N1B	90M-HC109610R	90M-HC109610R	IC	EEPROM	HVIC16AN10SU2.7
DSP	IC15	/N1G	90M-HC109610R	90M-HC109610R	IC	EEPROM	HVIC16AN10SU2.7
DSP	IC15	/N1S	90M-HC109610R	90M-HC109610R	IC	EEPROM	HVIC16AN10SU2.7
DSP	IC15	/U1B	nsp	90M-HC109840R	IC	C32AN10SU2.7	CVIC32AN10SU2.7
DSP	IC16		90M-HC108430R	90M-HC108430R	IC	TC74HC7007AFEL	HVITC74HCT7007F
DSP	IC17		90M-HS05CW30R	90M-HS05CW30R	U-PRO	HD64F2506 SR8001	CVIHD64F2506
DSP	IC18		00MHC10099540	00MHC10099540	IC	S-80145ALMC	HVIS-80145ALMC
DSP	IC19		00MHC705205Y0	00MHC705205Y0	IC	TC74HC4052AFT	CVITC74HC4052AFT
DSP	IC20		90M-HC400060R	90M-HC400060R	IC	TC74HC4094AFN	HVITC74HC4094FN
DSP	IC21		90M-HC400060R	90M-HC400060R	IC	TC74HC4094AFN	HVITC74HC4094FN
DSP	IC22		00MHC700400Z0	00MHC700400Z0	IC	TC74HCU04AFN	HVITC74HCU04AFN
DSP	IC23		00MHC011905K0	00MHC011905K0	IC	TC74VHC153FT	CVITC74VHC153FT
DSP	IC24		90M-HC700630R	90M-HC700630R	IC	TC74VHCT04AFN	CVITC74VHCT04AFN
DSP	IC25		00MHC10172090	00MHC10172090	IC	NJM2115MD OP AMP	HVINJM2115MDTE1

NOTE : "nsp" PART IS LISTED FOR REFERENCE ONLY, MARANTZ WILL NOT SUPPLY THESE PARTS.

P.W.B. NAME	POS. NO.	VERS. COLOR	PART NO. (FOR EUR)	PART NO. (MZ)	PART NAME	DESCRIPTION	
DSP	IC26		00MHC10172090	00MHC10172090	IC	NJM2115MD OP AMP	HVINJM2115MDTE1
DSP	IC27		00MHC10015880	00MHC10015880	IC	CS5361-KS A/D CONVERTER	HVICS5361-KS
DSP	IC28		90M-HC108910R	90M-HC108910R	IC	74VHC08	HVI74VHC08TTR
DSP	IC29		00MHC10418030	00MHC10418030	IC	LC89057W-VF4-E	HVILC89057WVF4E
DSP	IC32		90M-HC109290R	90M-HC109290R	IC	TC74VHC157FT	HVITC74VHC157FT
DSP	IC33		90M-HC109910R	90M-HC109910R	IC	TMS320DA708	CVITMS320DA708
DSP	IC34		90M-HS05CW10R	90M-HS05CW10R	U-PRO	M29W800DT70N SR8001	HVIM29W800DT70N
DSP	IC35		90M-HC109920R	90M-HC109920R	IC	M12L64164A7T	HVIM12L64164A7T
DSP	IC36		90M-HC108910R	90M-HC108910R	IC	74VHC08	HVI74VHC08TTR
DSP	IC37		90M-HC108910R	90M-HC108910R	IC	74VHC08	HVI74VHC08TTR
DSP	IC38		90M-HC109290R	90M-HC109290R	IC	TC74VHC157FT	HVITC74VHC157FT
DSP	IC39		90M-HC109290R	90M-HC109290R	IC	TC74VHC157FT	HVITC74VHC157FT
DSP	IC40		90M-HC109290R	90M-HC109290R	IC	TC74VHC157FT	HVITC74VHC157FT
DSP	IC41		90M-HC109790R	90M-HC109790R	IC	CS4382A-CQ	CVICS4382A-CQ
DSP	IC42		00MHC10114530	00MHC10114530	IC	S-80810CNNB	CVIS-80810CNNB
DSP	IC43		00MHC10114530	00MHC10114530	IC	S-80810CNNB	CVIS-80810CNNB
DSP	IC44		00MHC10102090	00MHC10102090	IC	NJM2068MD-TE1	HVINJM2068MDTE1
DSP	IC45		00MHC10102090	00MHC10102090	IC	NJM2068MD-TE1	HVINJM2068MDTE1
DSP	IC46		00MHC10102090	00MHC10102090	IC	NJM2068MD-TE1	HVINJM2068MDTE1
DSP	IC47		00MHC10102090	00MHC10102090	IC	NJM2068MD-TE1	HVINJM2068MDTE1
DSP	IC48		90M-HC300940R	90M-HC300940R	IC	LM1117-ADJ	HVILM1117S-ADJ
DSP	IC49		90M-HC300940R	90M-HC300940R	IC	LM1117-ADJ	HVILM1117S-ADJ
DSP	IC50		90M-HC900090R	90M-HC900090R	IC	KAI7812AF-RTF	HVIKIA7812AF
DSP	IC51		90M-HC300940R	90M-HC300940R	IC	LM1117-ADJ	HVILM1117S-ADJ
DSP	IC52		90M-HC300940R	90M-HC300940R	IC	LM1117-ADJ	HVILM1117S-ADJ
DSP	JK11		90M-YT004390R	90M-YT004390R	TERMINAL	RCA+OPT.(RX) GOLD YKC22-0774N	HJS9U004Z
DSP	JK12		90M-YT004390R	90M-YT004390R	TERMINAL	RCA+OPT.(RX) GOLD YKC22-0774N	HJS9U004Z
DSP	JK13		90M-YT004390R	90M-YT004390R	TERMINAL	RCA+OPT.(RX) GOLD YKC22-0774N	HJS9U004Z
DSP	JK14		90M-YT004380R	90M-YT004380R	TERMINAL	RCA+OPT. GOLD YKC22-0748N	HJS9U003Z
DSP	JK15		90M-YT003120R	90M-YT003120R	TERMINAL	CINCH 2P (GOLD) REMOTE	CJJ4N036Z
DSP	JK16		90M-YT003650R	90M-YT003650R	TERMINAL	CINCH 2P GREEN SILVER	CJJ4N071Z
DSP	JK17		90M-YJ002760R	90M-YJ002760R	CONN.	2P MINI JACK	HJJ1D002Z
DSP	JK18		90M-YJ002760R	90M-YJ002760R	CONN.	2P MINI JACK	HJJ1D002Z
DSP	JK19		90M-YT004860R	90M-YT004860R	TERMINAL	3.5MM JACK STEREO	CJJ2D008Z
DSP	JK20		90M-YT004860R	90M-YT004860R	TERMINAL	3.5MM JACK STEREO	CJJ2D008Z
DSP	JP11		nsp	nsp	CORD	SN95/PB5, 0.6	C3A206
DSP	JP12		nsp	nsp	CORD	SN95/PB5, 0.6	C3A206
DSP	JP13		nsp	nsp	CORD	SN95/PB5, 0.6	C3A206
DSP	JP14		nsp	nsp	CORD	SN95/PB5, 0.6	C3A206
DSP	JP15		nsp	nsp	CORD	SN95/PB5, 0.6	C3A206
DSP	JP16		nsp	nsp	CORD	SN95/PB5, 0.6	C3A206
DSP	JW29		nsp	nsp	CORD	WIRE ASSY	CWZSR7001JW29
DSP	JW30		nsp	nsp	CORD	WIRE ASSY	CWZSR7001JW30
DSP	LC10		90M-FC900340R	90M-FC900340R	FERRITE CORE	HU-1H4516-600JT	HLZ9Z014Z
DSP	LC11		90M-FC900340R	90M-FC900340R	FERRITE CORE	HU-1H4516-600JT	HLZ9Z014Z
DSP	LC12		90M-FC900460R	90M-FC900460R	EMI FILTER	CHIP BEAD (EMC FILTER)	CLZ9R007Z
DSP	LC13		90M-FC900460R	90M-FC900460R	EMI FILTER	CHIP BEAD (EMC FILTER)	CLZ9R007Z
DSP	LC14		nsp	00MNN05000610	CHIP RES.	0 OHM 1/10W J	CRJ10DJ0R0T
DSP	LC15		90M-LU000220R	90M-LU000220R	COIL	10UH	HLQ10E100KRZ
DSP	LC16		90M-LU000270R	90M-LU000270R	CHIP INDUCT	INDUCTOR CHIP	CLQ10E100KRY
DSP	QC10		90M-HX600010R	90M-HX600010R	CHIP TRS.	KRA102S	HVTKRA102S
DSP	QC11		00MHT30001000	00MHT30001000	TRS.	KTC3199Y	HVTKTC3199YT
DSP	QC12		90M-HX600010R	90M-HX600010R	CHIP TRS.	KRA102S	HVTKRA102S
DSP	QC13		90M-HX600010R	90M-HX600010R	CHIP TRS.	KRA102S	HVTKRA102S
DSP	QC14		90M-HX600010R	90M-HX600010R	CHIP TRS.	KRA102S	HVTKRA102S
DSP	QC15		00MHT600121A0	00MHT600121A0	TRS.	KTA1268GR	HVTKTA1268GRT
DSP	QC16		90M-HX800010R	90M-HX800010R	CHIP TRS.	KRC102S	HVTKRC102S
DSP	QC17		90M-HX600010R	90M-HX600010R	CHIP TRS.	KRA102S	HVTKRA102S
DSP	QC18		00MHT600121A0	00MHT600121A0	TRS.	KTA1268GR	HVTKTA1268GRT
DSP	QC19		90M-HX800010R	90M-HX800010R	CHIP TRS.	KRC102S	HVTKRC102S
DSP	QC20		90M-HX600010R	90M-HX600010R	CHIP TRS.	KRA102S	HVTKRA102S
DSP	QC21		90M-HX600010R	90M-HX600010R	CHIP TRS.	KRA102S	HVTKRA102S
DSP	QC22		90M-HX600010R	90M-HX600010R	CHIP TRS.	KRA102S	HVTKRA102S
DSP	QC23		90M-HX600010R	90M-HX600010R	CHIP TRS.	KRA102S	HVTKRA102S
DSP	QC24		90M-HX800010R	90M-HX800010R	CHIP TRS.	KRC102S	HVTKRC102S
DSP	QC25		90M-HX800010R	90M-HX800010R	CHIP TRS.	KRC102S	HVTKRC102S
DSP	QC26		90M-HX600010R	90M-HX600010R	CHIP TRS.	KRA102S	HVTKRA102S

NOTE : "nsp" PART IS LISTED FOR REFERENCE ONLY, MARANTZ WILL NOT SUPPLY THESE PARTS.

P.W.B. NAME	POS. NO.	VERS. COLOR	PART NO. (FOR EUR)	PART NO. (MZ)	PART NAME	DESCRIPTION	
DSP	QC27		90M-HT300970R	90M-HT300970R	TRS.	KTC2875B	HVTKTC2875B
DSP	QC28		90M-HT300970R	90M-HT300970R	TRS.	KTC2875B	HVTKTC2875B
DSP	R100		nsp	00MNN05103610	CHIP RES.	10K OHM 1/10W J	CRJ10DJ103T
DSP	R101		nsp	00MNN05750610	CHIP RES.	75 OHM 1/10W J	CRJ10DJ750T
DSP	R102		nsp	00MNN05330610	CHIP RES.	33 OHM 1/10W J	CRJ10DJ330T
DSP	R103		nsp	00MNN05330610	CHIP RES.	33 OHM 1/10W J	CRJ10DJ330T
DSP	R104		nsp	00MNN05330610	CHIP RES.	33 OHM 1/10W J	CRJ10DJ330T
DSP	R105		nsp	00MNN05330610	CHIP RES.	33 OHM 1/10W J	CRJ10DJ330T
DSP	R106		nsp	00MNN05101610	CHIP RES.	100 OHM 1/10W J	CRJ10DJ101T
DSP	R107		nsp	00MNN05101610	CHIP RES.	100 OHM 1/10W J	CRJ10DJ101T
DSP	R108		nsp	00MNN05101610	CHIP RES.	100 OHM 1/10W J	CRJ10DJ101T
DSP	R109		nsp	00MNN05101610	CHIP RES.	100 OHM 1/10W J	CRJ10DJ101T
DSP	R110		nsp	00MNN05103610	CHIP RES.	10K OHM 1/10W J	CRJ10DJ103T
DSP	R111		nsp	00MNN05103610	CHIP RES.	10K OHM 1/10W J	CRJ10DJ103T
DSP	R112		nsp	00MNN05103610	CHIP RES.	10K OHM 1/10W J	CRJ10DJ103T
DSP	R113		nsp	00MNN05103610	CHIP RES.	10K OHM 1/10W J	CRJ10DJ103T
DSP	R114		nsp	00MNN05103610	CHIP RES.	10K OHM 1/10W J	CRJ10DJ103T
DSP	R115		nsp	00MNN05103610	CHIP RES.	10K OHM 1/10W J	CRJ10DJ103T
DSP	R116		nsp	00MNN05103610	CHIP RES.	10K OHM 1/10W J	CRJ10DJ103T
DSP	R117		nsp	00MNN05101610	CHIP RES.	100 OHM 1/10W J	CRJ10DJ101T
DSP	R118		nsp	00MNN05560610	CHIP RES.	56 OHM 1/10W J	CRJ10DJ560T
DSP	R119		nsp	00MNN05101610	CHIP RES.	100 OHM 1/10W J	CRJ10DJ101T
DSP	R120		nsp	00MNN05101610	CHIP RES.	100 OHM 1/10W J	CRJ10DJ101T
DSP	R121		nsp	00MNN05101610	CHIP RES.	100 OHM 1/10W J	CRJ10DJ101T
DSP	R122		nsp	00MNN05560610	CHIP RES.	56 OHM 1/10W J	CRJ10DJ560T
DSP	R123		nsp	00MNN05103610	CHIP RES.	10K OHM 1/10W J	CRJ10DJ103T
DSP	R124		nsp	00MNN05103610	CHIP RES.	10K OHM 1/10W J	CRJ10DJ103T
DSP	R125		nsp	00MNN05103610	CHIP RES.	10K OHM 1/10W J	CRJ10DJ103T
DSP	R126		nsp	00MNN05103610	CHIP RES.	10K OHM 1/10W J	CRJ10DJ103T
DSP	R127		nsp	00MNN05103610	CHIP RES.	10K OHM 1/10W J	CRJ10DJ103T
DSP	R128		nsp	00MNN05000610	CHIP RES.	0 OHM 1/10W J	CRJ10DJ0R0T
DSP	R130		nsp	00MNN05750610	CHIP RES.	75 OHM 1/10W J	CRJ10DJ750T
DSP	R131		nsp	00MNN05105610	CHIP RES.	1M OHM 1/10W J	CRJ10DJ105T
DSP	R132		nsp	00MNN05101610	CHIP RES.	100 OHM 1/10W J	CRJ10DJ101T
DSP	R133		nsp	00MNN05000610	CHIP RES.	0 OHM 1/10W J	CRJ10DJ0R0T
DSP	R134		nsp	00MNN05000610	CHIP RES.	0 OHM 1/10W J	CRJ10DJ0R0T
DSP	R135		nsp	00MNN05000610	CHIP RES.	0 OHM 1/10W J	CRJ10DJ0R0T
DSP	R136		nsp	00MNN05000610	CHIP RES.	0 OHM 1/10W J	CRJ10DJ0R0T
DSP	R137		nsp	00MNN05000610	CHIP RES.	0 OHM 1/10W J	CRJ10DJ0R0T
DSP	R138		nsp	00MNN05000610	CHIP RES.	0 OHM 1/10W J	CRJ10DJ0R0T
DSP	R139		nsp	00MNN05000610	CHIP RES.	0 OHM 1/10W J	CRJ10DJ0R0T
DSP	R140		nsp	00MNN05000610	CHIP RES.	0 OHM 1/10W J	CRJ10DJ0R0T
DSP	R141		nsp	00MNN05223610	CHIP RES.	22K OHM 1/10W J	CRJ10DJ223T
DSP	R142		nsp	00MNN05000610	CHIP RES.	0 OHM 1/10W J	CRJ10DJ0R0T
DSP	R143		nsp	00MNN05000610	CHIP RES.	0 OHM 1/10W J	CRJ10DJ0R0T
DSP	R146		nsp	00MNN05101610	CHIP RES.	100 OHM 1/10W J	CRJ10DJ101T
DSP	R147		nsp	00MNN05101610	CHIP RES.	100 OHM 1/10W J	CRJ10DJ101T
DSP	R148		nsp	00MNN05101610	CHIP RES.	100 OHM 1/10W J	CRJ10DJ101T
DSP	R149		nsp	00MNN05101610	CHIP RES.	100 OHM 1/10W J	CRJ10DJ101T
DSP	R150		nsp	00MNN05101610	CHIP RES.	100 OHM 1/10W J	CRJ10DJ101T
DSP	R151		nsp	00MNN05101610	CHIP RES.	100 OHM 1/10W J	CRJ10DJ101T
DSP	R152		nsp	00MNN05820610	CHIP RES.	82 OHM 1/10W J	CRJ10DJ820T
DSP	R153		nsp	00MNN05820610	CHIP RES.	82 OHM 1/10W J	CRJ10DJ820T
DSP	R154		nsp	00MNN05332610	CHIP RES.	3.3K OHM 1/10W J	CRJ10DJ332T
DSP	R155		nsp	00MNN05332610	CHIP RES.	3.3K OHM 1/10W J	CRJ10DJ332T
DSP	R156		nsp	00MNN05182610	CHIP RES.	1.8K OHM 1/10W J	CRJ10DJ182T
DSP	R157		nsp	00MNN05472610	CHIP RES.	4.7K OHM 1/10W J	CRJ10DJ472T
DSP	R158		nsp	00MNN05332610	CHIP RES.	3.3K OHM 1/10W J	CRJ10DJ332T
DSP	R159		nsp	00MNN05332610	CHIP RES.	3.3K OHM 1/10W J	CRJ10DJ332T
DSP	R160		nsp	00MNN05472610	CHIP RES.	4.7K OHM 1/10W J	CRJ10DJ472T
DSP	R161		nsp	00MNN05182610	CHIP RES.	1.8K OHM 1/10W J	CRJ10DJ182T
DSP	R162		nsp	00MNN05182610	CHIP RES.	1.8K OHM 1/10W J	CRJ10DJ182T
DSP	R163		nsp	00MNN05472610	CHIP RES.	4.7K OHM 1/10W J	CRJ10DJ472T
DSP	R164		nsp	00MNN05391610	CHIP RES.	390 OHM 1/10W J	CRJ10DJ391T
DSP	R165		nsp	00MNN05104610	CHIP RES.	100K OHM 1/10W J	CRJ10DJ104T
DSP	R166		nsp	00MNN05104610	CHIP RES.	100K OHM 1/10W J	CRJ10DJ104T
DSP	R167		nsp	00MNN05391610	CHIP RES.	390 OHM 1/10W J	CRJ10DJ391T

NOTE : "nsp" PART IS LISTED FOR REFERENCE ONLY, MARANTZ WILL NOT SUPPLY THESE PARTS.

P.W.B. NAME	POS. NO.	VERS. COLOR	PART NO. (FOR EUR)	PART NO. (MZ)	PART NAME	DESCRIPTION	
DSP	R168		nsp	00MNN05182610	CHIP RES.	1.8K OHM 1/10W J	CRJ10DJ182T
DSP	R169		nsp	00MNN05472610	CHIP RES.	4.7K OHM 1/10W J	CRJ10DJ472T
DSP	R170		nsp	00MNN05472610	CHIP RES.	4.7K OHM 1/10W J	CRJ10DJ472T
DSP	R171		nsp	00MNN05182610	CHIP RES.	1.8K OHM 1/10W J	CRJ10DJ182T
DSP	R172		nsp	00MNN05391610	CHIP RES.	390 OHM 1/10W J	CRJ10DJ391T
DSP	R173		nsp	00MNN05104610	CHIP RES.	100K OHM 1/10W J	CRJ10DJ104T
DSP	R174		nsp	00MNN05104610	CHIP RES.	100K OHM 1/10W J	CRJ10DJ104T
DSP	R175		nsp	00MNN05391610	CHIP RES.	390 OHM 1/10W J	CRJ10DJ391T
DSP	R176		nsp	00MNN05472610	CHIP RES.	4.7K OHM 1/10W J	CRJ10DJ472T
DSP	R177		nsp	00MNN05182610	CHIP RES.	1.8K OHM 1/10W J	CRJ10DJ182T
DSP	R178		nsp	00MNN05182610	CHIP RES.	1.8K OHM 1/10W J	CRJ10DJ182T
DSP	R179		nsp	00MNN05472610	CHIP RES.	4.7K OHM 1/10W J	CRJ10DJ472T
DSP	R180		nsp	00MNN05332610	CHIP RES.	3.3K OHM 1/10W J	CRJ10DJ332T
DSP	R181		nsp	00MNN05332610	CHIP RES.	3.3K OHM 1/10W J	CRJ10DJ332T
DSP	R182		nsp	00MNN05472610	CHIP RES.	4.7K OHM 1/10W J	CRJ10DJ472T
DSP	R183		nsp	00MNN05182610	CHIP RES.	1.8K OHM 1/10W J	CRJ10DJ182T
DSP	R184		nsp	00MNN05332610	CHIP RES.	3.3K OHM 1/10W J	CRJ10DJ332T
DSP	R185		nsp	00MNN05332610	CHIP RES.	3.3K OHM 1/10W J	CRJ10DJ332T
DSP	R186		nsp	00MNN05472610	CHIP RES.	4.7K OHM 1/10W J	CRJ10DJ472T
DSP	R187		nsp	00MNN05182610	CHIP RES.	1.8K OHM 1/10W J	CRJ10DJ182T
DSP	R188		nsp	00MNN05391610	CHIP RES.	390 OHM 1/10W J	CRJ10DJ391T
DSP	R189		nsp	00MNN05104610	CHIP RES.	100K OHM 1/10W J	CRJ10DJ104T
DSP	R190		nsp	00MNN05104610	CHIP RES.	100K OHM 1/10W J	CRJ10DJ104T
DSP	R191		nsp	00MNN05391610	CHIP RES.	390 OHM 1/10W J	CRJ10DJ391T
DSP	R192		nsp	00MNN05472610	CHIP RES.	4.7K OHM 1/10W J	CRJ10DJ472T
DSP	R193		nsp	00MNN05182610	CHIP RES.	1.8K OHM 1/10W J	CRJ10DJ182T
DSP	R194		nsp	00MNN05182610	CHIP RES.	1.8K OHM 1/10W J	CRJ10DJ182T
DSP	R195		nsp	00MNN05472610	CHIP RES.	4.7K OHM 1/10W J	CRJ10DJ472T
DSP	R196		nsp	00MNN05332610	CHIP RES.	3.3K OHM 1/10W J	CRJ10DJ332T
DSP	R197		nsp	00MNN05332610	CHIP RES.	3.3K OHM 1/10W J	CRJ10DJ332T
DSP	R198		nsp	00MNN05472610	CHIP RES.	4.7K OHM 1/10W J	CRJ10DJ472T
DSP	R199		nsp	00MNN05182610	CHIP RES.	1.8K OHM 1/10W J	CRJ10DJ182T
DSP	R200		nsp	00MNN05332610	CHIP RES.	3.3K OHM 1/10W J	CRJ10DJ332T
DSP	R201		nsp	00MNN05332610	CHIP RES.	3.3K OHM 1/10W J	CRJ10DJ332T
DSP	R202		nsp	00MNN05472610	CHIP RES.	4.7K OHM 1/10W J	CRJ10DJ472T
DSP	R203		nsp	00MNN05182610	CHIP RES.	1.8K OHM 1/10W J	CRJ10DJ182T
DSP	R204		nsp	00MNN05391610	CHIP RES.	390 OHM 1/10W J	CRJ10DJ391T
DSP	R205		nsp	00MNN05104610	CHIP RES.	100K OHM 1/10W J	CRJ10DJ104T
DSP	R206		nsp	00MNN05104610	CHIP RES.	100K OHM 1/10W J	CRJ10DJ104T
DSP	R207		nsp	00MNN05391610	CHIP RES.	390 OHM 1/10W J	CRJ10DJ391T
DSP	R208		nsp	00MNN05472610	CHIP RES.	4.7K OHM 1/10W J	CRJ10DJ472T
DSP	R209		nsp	00MNN05182610	CHIP RES.	1.8K OHM 1/10W J	CRJ10DJ182T
DSP	R210		nsp	00MNN05182610	CHIP RES.	1.8K OHM 1/10W J	CRJ10DJ182T
DSP	R211		nsp	00MNN05472610	CHIP RES.	4.7K OHM 1/10W J	CRJ10DJ472T
DSP	R212		nsp	00MNN05332610	CHIP RES.	3.3K OHM 1/10W J	CRJ10DJ332T
DSP	R213		nsp	00MNN05332610	CHIP RES.	3.3K OHM 1/10W J	CRJ10DJ332T
DSP	R214		nsp	00MNN05472610	CHIP RES.	4.7K OHM 1/10W J	CRJ10DJ472T
DSP	R215		nsp	00MNN05182610	CHIP RES.	1.8K OHM 1/10W J	CRJ10DJ182T
DSP	R216		nsp	00MNN05332610	CHIP RES.	3.3K OHM 1/10W J	CRJ10DJ332T
DSP	R217		nsp	00MNN05332610	CHIP RES.	3.3K OHM 1/10W J	CRJ10DJ332T
DSP	R218	/U1B	nsp	00MNN05000610	CHIP RES.	0 OHM 1/10W J	CRJ10DJ0R0T
DSP	R219		nsp	00MNN05100610	CHIP RES.	10 OHM 1/10W J	CRJ10DJ100T
DSP	R220		nsp	00MNN05750610	CHIP RES.	75 OHM 1/10W J	CRJ10DJ750T
DSP	R221		nsp	00MNN05102610	CHIP RES.	1K OHM 1/10W J	CRJ10DJ102T
DSP	R222		nsp	00MNN05000610	CHIP RES.	0 OHM 1/10W J	CRJ10DJ0R0T
DSP	R223		nsp	00MNN05102610	CHIP RES.	1K OHM 1/10W J	CRJ10DJ102T
DSP	R224		nsp	00MNN05750610	CHIP RES.	75 OHM 1/10W J	CRJ10DJ750T
DSP	R225		nsp	00MNN05100610	CHIP RES.	10 OHM 1/10W J	CRJ10DJ100T
DSP	R226		nsp	00MNN05750610	CHIP RES.	75 OHM 1/10W J	CRJ10DJ750T
DSP	R227		nsp	00MNN05100610	CHIP RES.	10 OHM 1/10W J	CRJ10DJ100T
DSP	R228		nsp	00MNN05473610	CHIP RES.	47K OHM 1/10W J	CRJ10DJ473T
DSP	R229		nsp	00MNN05000610	CHIP RES.	0 OHM 1/10W J	CRJ10DJ0R0T
DSP	R230		nsp	00MNN05000610	CHIP RES.	0 OHM 1/10W J	CRJ10DJ0R0T
DSP	R235		nsp	00MNN05103610	CHIP RES.	10K OHM 1/10W J	CRJ10DJ103T
DSP	R236		nsp	00MNN05562610	CHIP RES.	5.6K OHM 1/10W J	CRJ10DJ562T
DSP	R237		nsp	00MNN05270610	CHIP RES.	27 OHM 1/10W J	CRJ10DJ270T
DSP	R238		nsp	00MNN05100610	CHIP RES.	10 OHM 1/10W J	CRJ10DJ100T

NOTE : "nsp" PART IS LISTED FOR REFERENCE ONLY, MARANTZ WILL NOT SUPPLY THESE PARTS.

P.W.B. NAME	POS. NO.	VERS. COLOR	PART NO. (FOR EUR)	PART NO. (MZ)	PART NAME	DESCRIPTION	
DSP	R239		nsp	00MNN05682610	CHIP RES.	6.8K OHM 1/10W J	CRJ10DJ682T
DSP	R240		nsp	00MNN05682610	CHIP RES.	6.8K OHM 1/10W J	CRJ10DJ682T
DSP	R241		nsp	00MNN05104610	CHIP RES.	100K OHM 1/10W J	CRJ10DJ104T
DSP	R242		nsp	00MNN05104610	CHIP RES.	100K OHM 1/10W J	CRJ10DJ104T
DSP	R243		nsp	00MNN05105610	CHIP RES.	1M OHM 1/10W J	CRJ10DJ105T
DSP	R244		nsp	00MNN05222610	CHIP RES.	2.2K OHM 1/10W J	CRJ10DJ222T
DSP	R245		nsp	00MNN05272610	CHIP RES.	2.7K OHM 1/10W J	CRJ10DJ272T
DSP	R246		nsp	00MNN05222610	CHIP RES.	2.2K OHM 1/10W J	CRJ10DJ222T
DSP	R247		nsp	00MNN05272610	CHIP RES.	2.7K OHM 1/10W J	CRJ10DJ272T
DSP	R248		nsp	00MNN05392610	CHIP RES.	3.9K OHM 1/10W J	CRJ10DJ392T
DSP	R249		nsp	00MNN05472610	CHIP RES.	4.7K OHM 1/10W J	CRJ10DJ472T
DSP	R250		nsp	00MNN05472610	CHIP RES.	4.7K OHM 1/10W J	CRJ10DJ472T
DSP	R251		nsp	00MNN05101610	CHIP RES.	100 OHM 1/10W J	CRJ10DJ101T
DSP	R252		nsp	00MNN05562610	CHIP RES.	5.6K OHM 1/10W J	CRJ10DJ562T
DSP	R253		nsp	00MNN05101610	CHIP RES.	100 OHM 1/10W J	CRJ10DJ101T
DSP	R254		nsp	00MNN05101610	CHIP RES.	100 OHM 1/10W J	CRJ10DJ101T
DSP	R255		nsp	00MNN05392610	CHIP RES.	3.9K OHM 1/10W J	CRJ10DJ392T
DSP	R256		nsp	00MNN05472610	CHIP RES.	4.7K OHM 1/10W J	CRJ10DJ472T
DSP	R257		nsp	00MNN05472610	CHIP RES.	4.7K OHM 1/10W J	CRJ10DJ472T
DSP	R258		nsp	00MNN05101610	CHIP RES.	100 OHM 1/10W J	CRJ10DJ101T
DSP	R259		nsp	00MNN05562610	CHIP RES.	5.6K OHM 1/10W J	CRJ10DJ562T
DSP	R260		nsp	00MNN05101610	CHIP RES.	100 OHM 1/10W J	CRJ10DJ101T
DSP	R261		nsp	00MNN05563610	CHIP RES.	56K OHM 1/10W J	CRJ10DJ563T
DSP	R262		nsp	00MNN05100610	CHIP RES.	10 OHM 1/10W J	CRJ10DJ100T
DSP	R263		nsp	00MNN05100610	CHIP RES.	10 OHM 1/10W J	CRJ10DJ100T
DSP	R264		nsp	00MNN05100610	CHIP RES.	10 OHM 1/10W J	CRJ10DJ100T
DSP	R265		nsp	00MNN05101610	CHIP RES.	100 OHM 1/10W J	CRJ10DJ101T
DSP	R270		nsp	00MNN05102610	CHIP RES.	1K OHM 1/10W J	CRJ10DJ102T
DSP	R335		nsp	00MNN05330610	CHIP RES.	33 OHM 1/10W J	CRJ10DJ330T
DSP	R336		nsp	00MNN05223610	CHIP RES.	22K OHM 1/10W J	CRJ10DJ223T
DSP	R337		nsp	00MNN05332610	CHIP RES.	3.3K OHM 1/10W J	CRJ10DJ332T
DSP	R338		nsp	00MNN05103610	CHIP RES.	10K OHM 1/10W J	CRJ10DJ103T
DSP	R339		nsp	00MNN05103610	CHIP RES.	10K OHM 1/10W J	CRJ10DJ103T
DSP	R340		nsp	00MNN05103610	CHIP RES.	10K OHM 1/10W J	CRJ10DJ103T
DSP	R341		nsp	00MNN05103610	CHIP RES.	10K OHM 1/10W J	CRJ10DJ103T
DSP	R342		nsp	00MNN05010610	CHIP RES.	1 OHM 1/10W J	CRJ10DJ1R0T
DSP	R343		nsp	00MNN05105610	CHIP RES.	1M OHM 1/10W J	CRJ10DJ105T
DSP	R344		nsp	00MNN05101610	CHIP RES.	100 OHM 1/10W J	CRJ10DJ101T
DSP	R345		nsp	00MNN05562610	CHIP RES.	5.6K OHM 1/10W J	CRJ10DJ562T
DSP	R362		nsp	00MNN05101610	CHIP RES.	100 OHM 1/10W J	CRJ10DJ101T
DSP	R363		nsp	00MNN05101610	CHIP RES.	100 OHM 1/10W J	CRJ10DJ101T
DSP	R364		nsp	00MNN05101610	CHIP RES.	100 OHM 1/10W J	CRJ10DJ101T
DSP	R365		nsp	00MNN05101610	CHIP RES.	100 OHM 1/10W J	CRJ10DJ101T
DSP	R366		nsp	00MNN05101610	CHIP RES.	100 OHM 1/10W J	CRJ10DJ101T
DSP	R367		nsp	00MNN05330610	CHIP RES.	33 OHM 1/10W J	CRJ10DJ330T
DSP	R368		nsp	00MNN05221610	CHIP RES.	220 OHM 1/10W J	CRJ10DJ221T
DSP	R369		nsp	00MNN05330610	CHIP RES.	33 OHM 1/10W J	CRJ10DJ330T
DSP	R370		nsp	00MNN05472610	CHIP RES.	4.7K OHM 1/10W J	CRJ10DJ472T
DSP	R371		nsp	00MNN05472610	CHIP RES.	4.7K OHM 1/10W J	CRJ10DJ472T
DSP	R372		nsp	00MNN05104610	CHIP RES.	100K OHM 1/10W J	CRJ10DJ104T
DSP	R373		nsp	00MNN05104610	CHIP RES.	100K OHM 1/10W J	CRJ10DJ104T
DSP	R374		nsp	00MNN05472610	CHIP RES.	4.7K OHM 1/10W J	CRJ10DJ472T
DSP	R375		nsp	00MNN05104610	CHIP RES.	100K OHM 1/10W J	CRJ10DJ104T
DSP	R376		nsp	00MNN05472610	CHIP RES.	4.7K OHM 1/10W J	CRJ10DJ472T
DSP	R377		nsp	00MNN05104610	CHIP RES.	100K OHM 1/10W J	CRJ10DJ104T
DSP	R378		nsp	00MNN05472610	CHIP RES.	4.7K OHM 1/10W J	CRJ10DJ472T
DSP	R379		nsp	00MNN05104610	CHIP RES.	100K OHM 1/10W J	CRJ10DJ104T
DSP	R380		nsp	00MNN05473610	CHIP RES.	47K OHM 1/10W J	CRJ10DJ473T
DSP	R381		nsp	00MNN05473610	CHIP RES.	47K OHM 1/10W J	CRJ10DJ473T
DSP	RC10		nsp	00MNN05000610	CHIP RES.	0 OHM 1/10W J	CRJ10DJ0R0T
DSP	RC11		nsp	00MNN05473610	CHIP RES.	47K OHM 1/10W J	CRJ10DJ473T
DSP	RC12		nsp	00MNN05470610	CHIP RES.	47 OHM 1/10W J	CRJ10DJ470T
DSP	RC13		nsp	00MNN05473610	CHIP RES.	47K OHM 1/10W J	CRJ10DJ473T
DSP	RC14		nsp	00MNN05183610	CHIP RES.	18K OHM 1/10W J	CRJ10DJ183T
DSP	RC15		nsp	00MNN05473610	CHIP RES.	47K OHM 1/10W J	CRJ10DJ473T
DSP	RC16		nsp	00MNN05221610	CHIP RES.	220 OHM 1/10W J	CRJ10DJ221T
DSP	RC17		nsp	00MNN05470610	CHIP RES.	47 OHM 1/10W J	CRJ10DJ470T

NOTE : "nsp" PART IS LISTED FOR REFERENCE ONLY, MARANTZ WILL NOT SUPPLY THESE PARTS.

P.W.B. NAME	POS. NO.	VERS. COLOR	PART NO. (FOR EUR)	PART NO. (MZ)	PART NAME	DESCRIPTION	
DSP	RC18		nsp	00MNN05183610	CHIP RES.	18K OHM 1/10W J	CRJ10DJ183T
DSP	RC19		nsp	00MNN05101610	CHIP RES.	100 OHM 1/10W J	CRJ10DJ101T
DSP	RC20		nsp	00MNN05101610	CHIP RES.	100 OHM 1/10W J	CRJ10DJ101T
DSP	RC21		nsp	00MNN05102610	CHIP RES.	1K OHM 1/10W J	CRJ10DJ102T
DSP	RC22		nsp	00MNN05473610	CHIP RES.	47K OHM 1/10W J	CRJ10DJ473T
DSP	RC23		nsp	00MNN05473610	CHIP RES.	47K OHM 1/10W J	CRJ10DJ473T
DSP	RC24		nsp	00MNN05220610	CHIP RES.	22 OHM 1/10W J	CRJ10DJ220T
DSP	RC25		nsp	00MNN05220610	CHIP RES.	22 OHM 1/10W J	CRJ10DJ220T
DSP	RC26		nsp	00MNN05103610	CHIP RES.	10K OHM 1/10W J	CRJ10DJ103T
DSP	RC27		nsp	00MNN05223610	CHIP RES.	22K OHM 1/10W J	CRJ10DJ223T
DSP	RC28		nsp	00MNN05682610	CHIP RES.	6.8K OHM 1/10W J	CRJ10DJ682T
DSP	RC29		nsp	00MNN05047610	CHIP RES.	4.7 OHM 1/10W J	CRJ10DJ4R7T
DSP	RC30		nsp	00MNN05047610	CHIP RES.	4.7 OHM 1/10W J	CRJ10DJ4R7T
DSP	RC31		nsp	00MNN05220610	CHIP RES.	22 OHM 1/10W J	CRJ10DJ220T
DSP	RC32		nsp	00MNN05220610	CHIP RES.	22 OHM 1/10W J	CRJ10DJ220T
DSP	RC33		nsp	00MNN05103610	CHIP RES.	10K OHM 1/10W J	CRJ10DJ103T
DSP	RC35		nsp	00MNN05223610	CHIP RES.	22K OHM 1/10W J	CRJ10DJ223T
DSP	RC36		nsp	00MNN05682610	CHIP RES.	6.8K OHM 1/10W J	CRJ10DJ682T
DSP	RC37		nsp	00MNN05047610	CHIP RES.	4.7 OHM 1/10W J	CRJ10DJ4R7T
DSP	RC38		nsp	00MNN05047610	CHIP RES.	4.7 OHM 1/10W J	CRJ10DJ4R7T
DSP	RC39		nsp	00MNN05102610	CHIP RES.	1K OHM 1/10W J	CRJ10DJ102T
DSP	RC40		nsp	00MNN05102610	CHIP RES.	1K OHM 1/10W J	CRJ10DJ102T
DSP	RC41		nsp	00MNN05471610	CHIP RES.	470 OHM 1/10W J	CRJ10DJ471T
DSP	RC42		nsp	00MNN05471610	CHIP RES.	470 OHM 1/10W J	CRJ10DJ471T
DSP	RC43		nsp	00MNN05221610	CHIP RES.	220 OHM 1/10W J	CRJ10DJ221T
DSP	RC44		nsp	00MNN05221610	CHIP RES.	220 OHM 1/10W J	CRJ10DJ221T
DSP	RC45		nsp	00MNN05101610	CHIP RES.	100 OHM 1/10W J	CRJ10DJ101T
DSP	RC46		nsp	00MNN05101610	CHIP RES.	100 OHM 1/10W J	CRJ10DJ101T
DSP	RC47		nsp	00MNN05103610	CHIP RES.	10K OHM 1/10W J	CRJ10DJ103T
DSP	RC48		nsp	00MNN05473610	CHIP RES.	47K OHM 1/10W J	CRJ10DJ473T
DSP	RC49		nsp	00MNN05473610	CHIP RES.	47K OHM 1/10W J	CRJ10DJ473T
DSP	RC51		nsp	00MNN05010610	CHIP RES.	1 OHM 1/10W J	CRJ10DJ1R0T
DSP	RC52		nsp	00MNN05473610	CHIP RES.	47K OHM 1/10W J	CRJ10DJ473T
DSP	RC53		nsp	00MNN05473610	CHIP RES.	47K OHM 1/10W J	CRJ10DJ473T
DSP	RC54		nsp	00MNN05472610	CHIP RES.	4.7K OHM 1/10W J	CRJ10DJ472T
DSP	RC55		nsp	00MNN05472610	CHIP RES.	4.7K OHM 1/10W J	CRJ10DJ472T
DSP	RC56		nsp	00MNN05472610	CHIP RES.	4.7K OHM 1/10W J	CRJ10DJ472T
DSP	RC57		nsp	00MNN05473610	CHIP RES.	47K OHM 1/10W J	CRJ10DJ473T
DSP	RC58		nsp	00MNN05473610	CHIP RES.	47K OHM 1/10W J	CRJ10DJ473T
DSP	RC59		nsp	00MNN05473610	CHIP RES.	47K OHM 1/10W J	CRJ10DJ473T
DSP	RC60		nsp	00MNN05473610	CHIP RES.	47K OHM 1/10W J	CRJ10DJ473T
DSP	RC61	/N1B	nsp	00MNN05832610	CHIP RES.	82K OHM 1/10W J	CRJ10DJ823T
DSP	RC61	/N1G	nsp	00MNN05832610	CHIP RES.	82K OHM 1/10W J	CRJ10DJ823T
DSP	RC61	/N1S	nsp	00MNN05832610	CHIP RES.	82K OHM 1/10W J	CRJ10DJ823T
DSP	RC62	/N1B	nsp	00MNN05223610	CHIP RES.	22K OHM 1/10W J	CRJ10DJ223T
DSP	RC62	/N1G	nsp	00MNN05223610	CHIP RES.	22K OHM 1/10W J	CRJ10DJ223T
DSP	RC62	/N1S	nsp	00MNN05223610	CHIP RES.	22K OHM 1/10W J	CRJ10DJ223T
DSP	RC62	/U1B	nsp	00MNN05000610	CHIP RES.	0 OHM 1/10W J	CRJ10DJ0R0T
DSP	RC64		nsp	00MNN05473610	CHIP RES.	47K OHM 1/10W J	CRJ10DJ473T
DSP	RC65		nsp	00MNN05473610	CHIP RES.	47K OHM 1/10W J	CRJ10DJ473T
DSP	RC66		nsp	00MNN05473610	CHIP RES.	47K OHM 1/10W J	CRJ10DJ473T
DSP	RC67		nsp	00MNN05473610	CHIP RES.	47K OHM 1/10W J	CRJ10DJ473T
DSP	RC68		nsp	00MNN05473610	CHIP RES.	47K OHM 1/10W J	CRJ10DJ473T
DSP	RC69		nsp	00MNN05473610	CHIP RES.	47K OHM 1/10W J	CRJ10DJ473T
DSP	RC70		nsp	00MNN05473610	CHIP RES.	47K OHM 1/10W J	CRJ10DJ473T
DSP	RC71		nsp	00MNN05473610	CHIP RES.	47K OHM 1/10W J	CRJ10DJ473T
DSP	RC72		nsp	00MNN05473610	CHIP RES.	47K OHM 1/10W J	CRJ10DJ473T
DSP	RC73		nsp	00MNN05000610	CHIP RES.	0 OHM 1/10W J	CRJ10DJ0R0T
DSP	RC74		nsp	00MNN05000610	CHIP RES.	0 OHM 1/10W J	CRJ10DJ0R0T
DSP	RC75		nsp	00MNN05473610	CHIP RES.	47K OHM 1/10W J	CRJ10DJ473T
DSP	RC76		nsp	00MNN05473610	CHIP RES.	47K OHM 1/10W J	CRJ10DJ473T
DSP	RC77		nsp	00MNN05473610	CHIP RES.	47K OHM 1/10W J	CRJ10DJ473T
DSP	RC78		nsp	00MNN05101610	CHIP RES.	100 OHM 1/10W J	CRJ10DJ101T
DSP	RC79		nsp	00MNN05101610	CHIP RES.	100 OHM 1/10W J	CRJ10DJ101T
DSP	RC80		nsp	00MNN05222610	CHIP RES.	2.2K OHM 1/10W J	CRJ10DJ222T
DSP	RC81		nsp	00MNN05683610	CHIP RES.	68K OHM 1/10W J	CRJ10DJ683T
DSP	RC82		nsp	00MNN05223610	CHIP RES.	22K OHM 1/10W J	CRJ10DJ223T

NOTE : "nsp" PART IS LISTED FOR REFERENCE ONLY, MARANTZ WILL NOT SUPPLY THESE PARTS.

P.W.B. NAME	POS. NO.	VERS. COLOR	PART NO. (FOR EUR)	PART NO. (MZ)	PART NAME	DESCRIPTION	
DSP	RC83		nsp	00MNN05223610	CHIP RES.	22K OHM 1/10W J	CRJ10DJ223T
DSP	RC84		nsp	00MNN05103610	CHIP RES.	10K OHM 1/10W J	CRJ10DJ103T
DSP	RC87		nsp	00MNN05103610	CHIP RES.	10K OHM 1/10W J	CRJ10DJ103T
DSP	RC88		nsp	00MNN05562610	CHIP RES.	5.6K OHM 1/10W J	CRJ10DJ562T
DSP	RC89		nsp	00MNN05473610	CHIP RES.	47K OHM 1/10W J	CRJ10DJ473T
DSP	RN10		90M-BW000390R	90M-BW000390R	RES. COMPO.	ARC 241 100R	CRJ104DJ101T
DSP	RN11		90M-BW000390R	90M-BW000390R	RES. COMPO.	ARC 241 100R	CRJ104DJ101T
DSP	RN12		90M-BW000390R	90M-BW000390R	RES. COMPO.	ARC 241 100R	CRJ104DJ101T
DSP	RN13		90M-BW000390R	90M-BW000390R	RES. COMPO.	ARC 241 100R	CRJ104DJ101T
DSP	RN14		90M-BW000390R	90M-BW000390R	RES. COMPO.	ARC 241 100R	CRJ104DJ101T
DSP	RN15		90M-BW000390R	90M-BW000390R	RES. COMPO.	ARC 241 100R	CRJ104DJ101T
DSP	RN16		90M-BW000390R	90M-BW000390R	RES. COMPO.	ARC 241 100R	CRJ104DJ101T
DSP	RN17		90M-BW000390R	90M-BW000390R	RES. COMPO.	ARC 241 100R	CRJ104DJ101T
DSP	RN18		90M-BW000390R	90M-BW000390R	RES. COMPO.	ARC 241 100R	CRJ104DJ101T
DSP	RN19		90M-BW000390R	90M-BW000390R	RES. COMPO.	ARC 241 100R	CRJ104DJ101T
DSP	RN20		90M-BW000390R	90M-BW000390R	RES. COMPO.	ARC 241 100R	CRJ104DJ101T
DSP	RN21		90M-BW000390R	90M-BW000390R	RES. COMPO.	ARC 241 100R	CRJ104DJ101T
DSP	RN22		90M-BW000390R	90M-BW000390R	RES. COMPO.	ARC 241 100R	CRJ104DJ101T
DSP	RO12		nsp	00MNN05000610	CHIP RES.	0 OHM 1/10W J	CRJ10DJ0R0T
DSP	RO13	/U1B	nsp	00MNN05000610	CHIP RES.	0 OHM 1/10W J	CRJ10DJ0R0T
DSP	RO14	/N1B	nsp	00MNN05000610	CHIP RES.	0 OHM 1/10W J	CRJ10DJ0R0T
DSP	RO14	/N1G	nsp	00MNN05000610	CHIP RES.	0 OHM 1/10W J	CRJ10DJ0R0T
DSP	RO14	/N1S	nsp	00MNN05000610	CHIP RES.	0 OHM 1/10W J	CRJ10DJ0R0T
DSP	RR10		00MNM11800020	00MNM11800020	CHIP RES.	180 OHM 1%	CRJ10DF1800T
DSP	RR11		00MNM11800020	00MNM11800020	CHIP RES.	180 OHM 1%	CRJ10DF1800T
DSP	RR13		00MNM12200020	00MNM12200020	CHIP RES.	220 OHM 1%	CRJ10DF2200T
DSP	RR14		00MNM1033G020	00MNM1033G020	CHIP RES.	3.3 OHM 1%	CRJ10DF3R30T
DSP	RR15		00MNM12200020	00MNM12200020	CHIP RES.	220 OHM 1%	CRJ10DF2200T
DSP	RR19		00MNM12200020	00MNM12200020	CHIP RES.	220 OHM 1%	CRJ10DF2200T
DSP	RR20		00MNM12200020	00MNM12200020	CHIP RES.	220 OHM 1%	CRJ10DF2200T
DSP	RR21		00MNM11800020	00MNM11800020	CHIP RES.	180 OHM 1%	CRJ10DF1800T
DSP	RR22		00MNM11800020	00MNM11800020	CHIP RES.	180 OHM 1%	CRJ10DF1800T
DSP	RR23		00MNM12200020	00MNM12200020	CHIP RES.	220 OHM 1%	CRJ10DF2200T
DSP	RR24		nsp	00MNN05222610	CHIP RES.	2.2K OHM 1/10W J	CRJ10DJ222T
DSP	RR25		nsp	00MNN05183610	CHIP RES.	18K OHM 1/10W J	CRJ10DJ183T
DSP	RR26		nsp	00MNN05222610	CHIP RES.	2.2K OHM 1/10W J	CRJ10DJ222T
DSP	RR27		nsp	00MNN05103610	CHIP RES.	10K OHM 1/10W J	CRJ10DJ103T
DSP	RR28		nsp	00MNN05223610	CHIP RES.	22K OHM 1/10W J	CRJ10DJ223T
DSP	RR29		nsp	00MNN05103610	CHIP RES.	10K OHM 1/10W J	CRJ10DJ103T
DSP	RR30		nsp	00MNN05000610	CHIP RES.	0 OHM 1/10W J	CRJ10DJ0R0T
DSP	RR32		nsp	00MNN05103610	CHIP RES.	10K OHM 1/10W J	CRJ10DJ103T
DSP	RR34		nsp	00MNN05000610	CHIP RES.	0 OHM 1/10W J	CRJ10DJ0R0T
DSP	RR35		nsp	00MNN05103610	CHIP RES.	10K OHM 1/10W J	CRJ10DJ103T
DSP	RR36		nsp	00MNN05103610	CHIP RES.	10K OHM 1/10W J	CRJ10DJ103T
DSP	RR37		nsp	00MNN05103610	CHIP RES.	10K OHM 1/10W J	CRJ10DJ103T
DSP	RR38		nsp	00MNN05103610	CHIP RES.	10K OHM 1/10W J	CRJ10DJ103T
DSP	RR39		nsp	00MNN05103610	CHIP RES.	10K OHM 1/10W J	CRJ10DJ103T
DSP	RX10		90M-HP000100R	90M-HP000100R	VARISTOR	POSISTOR	CRTRXEF005
DSP	RY10		90M-LY000380R	90M-LY000380R	RELAY	D3023	HSL4C008ZE
DSP	SW10		90M-SP001290R	90M-SP001290R	SW	SPUJ19XSM011	HSH2B018Z
DSP	XC10		90M-JX001190R	90M-JX001190R	X'TAL	20MHZ	HOX20000E220TF
DSP	XC11		90M-JX001340R	90M-JX001340R	X'TAL	24.576MHZ	COX24576E180TF
DSP	XC12		90M-JX001350R	90M-JX001350R	X'TAL	24.576MHZ 10PPM	COX24576E120TF
					FRONT PWB (CUP11869Z)		
FRONT	BN14		nsp	nsp	CORD	WIRE ASSY	CWB1B907450BN
FRONT	BN51		nsp	nsp	CORD	WIRE ASSY	CWB1B909050EN
FRONT	BN52		nsp	nsp	CORD	WIRE ASSY	CWB1B908050EN
FRONT	BN53		nsp	nsp	CORD	WIRE ASSY	CWZSR7001BN53
FRONT	C801		nsp	00MOA10701620	ELECT CAP.	100UF 16V	CCEA1CH101T
FRONT	C802		nsp	00MOA10605020	ELECT CAP.	10UF 50V	CCEA1HH100T
FRONT	C804		nsp	nsp	CER. CAP.	0.01UF 50V Z	HCBS1H103ZFT
FRONT	C805		nsp	nsp	CER. CAP.	100PF 50V K	HCBS1H101KBT
FRONT	C806		nsp	00MOA10703520	ELECT CAP.	100UF 35V	CCEA1VH101T
FRONT	C807		nsp	nsp	CER. CAP.	100PF 50V K	HCBS1H101KBT
FRONT	C809		nsp	nsp	CER. CAP.	100PF 50V K	HCBS1H101KBT
FRONT	C810		nsp	nsp	CER. CAP.	100PF 50V K	HCBS1H101KBT
FRONT	C811		nsp	nsp	CER. CAP.	100PF 50V K	HCBS1H101KBT

NOTE : "nsp" PART IS LISTED FOR REFERENCE ONLY, MARANTZ WILL NOT SUPPLY THESE PARTS.

P.W.B. NAME	POS. NO.	VERS. COLOR	PART NO. (FOR EUR)	PART NO. (MZ)	PART NAME	DESCRIPTION	
FRONT	C812		nsp	nsp	CER. CAP.	0.1UF 50V Z	HCBS1H104ZFT
FRONT	C813		nsp	00MOA10701620	ELECT CAP.	100UF 16V	CCEA1CH101T
FRONT	C816		nsp	nsp	CER. CAP.	0.1UF 50V Z	HCBS1H104ZFT
FRONT	C817		nsp	nsp	CER. CAP.	0.1UF 50V Z	HCBS1H104ZFT
FRONT	C818		nsp	nsp	CER. CAP.	100PF 50V K	HCBS1H101KBT
FRONT	C820		nsp	nsp	CER. CAP.	100PF 50V K	HCBS1H101KBT
FRONT	C821		nsp	90M-EJ000040R	ELECT CAP.	10UF 50V KS	CCEA1HKS100T
FRONT	C822		nsp	nsp	CER. CAP.	100PF 50V K	HCBS1H101KBT
FRONT	C824		nsp	nsp	CER. CAP.	0.1UF 50V Z	HCBS1H104ZFT
FRONT	C825		nsp	nsp	CER. CAP.	390PF 50V KB	HCBS1H391KBT
FRONT	C826		nsp	nsp	CER. CAP.	100PF 50V K	HCBS1H101KBT
FRONT	C827		nsp	nsp	CER. CAP.	100PF 50V K	HCBS1H101KBT
FRONT	C828		nsp	00MEJ10601610	ELECT CAP.	100UF 16V KS	CCEA1CKS101T
FRONT	C881		nsp	nsp	CER. CAP.	470PF 50V	HCBS1H471KBT
FRONT	C882		nsp	00MOA22605020	ELECT CAP.	22UF 50V	CCEA1HH220T
FRONT	C883		nsp	90M-EJ000050R	ELECT CAP.	4.7UF 50V	CCEA1HKS4R7T
FRONT	C884		nsp	nsp	CER. CAP.	470PF 50V	HCBS1H471KBT
FRONT	C891		nsp	90M-EJ000120R	ELECT CAP.	47UF 25V	CCEA1EKS470T
FRONT	C893		nsp	nsp	CER. CAP.	0.1UF 50V Z	HCBS1H104ZFT
FRONT	C894		nsp	nsp	CER. CAP.	0.1UF 50V Z	HCBS1H104ZFT
FRONT	C895		nsp	nsp	CER. CAP.	0.1UF 50V Z	HCBS1H104ZFT
FRONT	C896		nsp	90M-EJ000050R	ELECT CAP.	4.7UF 50V	CCEA1HKS4R7T
FRONT	C968		nsp	nsp	CER. CAP.	0.1UF 50V Z	HCBS1H104ZFT
FRONT	C970		nsp	nsp	CER. CAP.	0.1UF 50V Z	HCBS1H104ZFT
FRONT	C982		nsp	nsp	CER. CAP.	100PF 50V K	HCBS1H101KBT
FRONT	CN15		nsp	nsp	CONN.	21P FPC WAFER	CJP21GA117ZY
FRONT	D802		90M-HI101040R	90M-HI101040R	L.E.D.	SLR342VCTB7T089	HVD342VCTB7T089
FRONT	D803		90M-HI101190R	90M-HI101190R	L.E.D.	BLUE LED TOL-52CSBBCEAB2	CVD52CSBBCEAB2
FRONT	D811		90M-HI101190R	90M-HI101190R	L.E.D.	BLUE LED TOL-52CSBBCEAB2	CVD52CSBBCEAB2
FRONT	FL81		90M-HQ300620R	90M-HQ300620R	DISPLAY	16-BT-110GNK	HFL16BT110GNK
FRONT	IC81		00MHC10220090	00MHC10220090	IC	NJU3430F VFD DRIVER	HVINJU3430F
FRONT	IC85		00MHC10102090	00MHC10102090	IC	NJM2068MD-TE1	HVINJM2068MDTE1
FRONT	J802		nsp	nsp	CORD	SN95/PB5, 0.6	C3A206
FRONT	J806		nsp	nsp	CORD	SN95/PB5, 0.6	C3A206
FRONT	J808		nsp	nsp	CORD	SN95/PB5, 0.6	C3A206
FRONT	J809		nsp	nsp	CORD	SN95/PB5, 0.6	C3A206
FRONT	J810		nsp	nsp	CORD	SN95/PB5, 0.6	C3A206
FRONT	J811		nsp	nsp	CORD	SN95/PB5, 0.6	C3A206
FRONT	J812		nsp	nsp	CORD	SN95/PB5, 0.6	C3A206
FRONT	J813		nsp	nsp	CORD	SN95/PB5, 0.6	C3A206
FRONT	J814		nsp	nsp	CORD	SN95/PB5, 0.6	C3A206
FRONT	J815		nsp	nsp	CORD	SN95/PB5, 0.6	C3A206
FRONT	J816		nsp	nsp	CORD	SN95/PB5, 0.6	C3A206
FRONT	J817		nsp	nsp	CORD	SN95/PB5, 0.6	C3A206
FRONT	J818		nsp	nsp	CORD	SN95/PB5, 0.6	C3A206
FRONT	J819		nsp	nsp	CORD	SN95/PB5, 0.6	C3A206
FRONT	J820		nsp	nsp	CORD	SN95/PB5, 0.6	C3A206
FRONT	J821		nsp	nsp	CORD	SN95/PB5, 0.6	C3A206
FRONT	J822		nsp	nsp	CORD	SN95/PB5, 0.6	C3A206
FRONT	J823		nsp	nsp	CORD	SN95/PB5, 0.6	C3A206
FRONT	J824		nsp	nsp	CORD	SN95/PB5, 0.6	C3A206
FRONT	J825		nsp	nsp	CORD	SN95/PB5, 0.6	C3A206
FRONT	J826		nsp	nsp	CORD	SN95/PB5, 0.6	C3A206
FRONT	J827		nsp	nsp	CORD	SN95/PB5, 0.6	C3A206
FRONT	J828		nsp	nsp	CORD	SN95/PB5, 0.6	C3A206
FRONT	J829		nsp	nsp	CORD	SN95/PB5, 0.6	C3A206
FRONT	J830		nsp	nsp	CORD	SN95/PB5, 0.6	C3A206
FRONT	J831		nsp	nsp	CORD	SN95/PB5, 0.6	C3A206
FRONT	J832		nsp	nsp	CORD	SN95/PB5, 0.6	C3A206
FRONT	J833		nsp	nsp	CORD	SN95/PB5, 0.6	C3A206
FRONT	J834		nsp	nsp	CORD	SN95/PB5, 0.6	C3A206
FRONT	J835		nsp	nsp	CORD	SN95/PB5, 0.6	C3A206
FRONT	J836		nsp	nsp	CORD	SN95/PB5, 0.6	C3A206
FRONT	J837		nsp	nsp	CORD	SN95/PB5, 0.6	C3A206
FRONT	J838		nsp	nsp	CORD	SN95/PB5, 0.6	C3A206
FRONT	J839		nsp	nsp	CORD	SN95/PB5, 0.6	C3A206
FRONT	J840		nsp	nsp	CORD	SN95/PB5, 0.6	C3A206

NOTE : "nsp" PART IS LISTED FOR REFERENCE ONLY, MARANTZ WILL NOT SUPPLY THESE PARTS.

P.W.B. NAME	POS. NO.	VERS. COLOR	PART NO. (FOR EUR)	PART NO. (MZ)	PART NAME	DESCRIPTION	
FRONT	J841		nsp	nsp	CORD	SN95/PB5, 0.6	C3A206
FRONT	J850		nsp	nsp	CORD	SN95/PB5, 0.6	C3A206
FRONT	J851		nsp	nsp	CORD	SN95/PB5, 0.6	C3A206
FRONT	J852		nsp	nsp	CORD	SN95/PB5, 0.6	C3A206
FRONT	J853		nsp	nsp	CORD	SN95/PB5, 0.6	C3A206
FRONT	J854		nsp	nsp	CORD	SN95/PB5, 0.6	C3A206
FRONT	J855		nsp	nsp	CORD	SN95/PB5, 0.6	C3A206
FRONT	J856		nsp	nsp	CORD	SN95/PB5, 0.6	C3A206
FRONT	J857		nsp	nsp	CORD	SN95/PB5, 0.6	C3A206
FRONT	J858		nsp	nsp	CORD	SN95/PB5, 0.6	C3A206
FRONT	J859		nsp	nsp	CORD	SN95/PB5, 0.6	C3A206
FRONT	J860		nsp	nsp	CORD	SN95/PB5, 0.6	C3A206
FRONT	J861		nsp	nsp	CORD	SN95/PB5, 0.6	C3A206
FRONT	J862		nsp	nsp	CORD	SN95/PB5, 0.6	C3A206
FRONT	J863		nsp	nsp	CORD	SN95/PB5, 0.6	C3A206
FRONT	J870		nsp	nsp	CORD	SN95/PB5, 0.6	C3A206
FRONT	J872		nsp	nsp	CORD	SN95/PB5, 0.6	C3A206
FRONT	JK82		90M-YT004320R	90M-YT004320R	TERMINAL	HEADPHONE JACK	HJJ2D003Z
FRONT	JW11		nsp	nsp	CORD	WIRE ASSY	CWE8102160RV
FRONT	Q801		00MBA10001000	00MBA10001000	TRS.	KRA102M	HVTKRA102MT
FRONT	Q803		00MHT30001000	00MHT30001000	TRS.	KTC3199Y	HVTKTC3199YT
FRONT	Q808		00MBA20001000	00MBA20001000	TRS.	KRC102M	HVTKRC102MT
FRONT	Q809		00MBA10001000	00MBA10001000	TRS.	KRA102M	HVTKRA102MT
FRONT	Q811		00MBA10001000	00MBA10001000	TRS.	KRA102M	HVTKRA102MT
FRONT	R805		nsp	nsp	RES.	100 OHM 1/5W J	CRD20TJ101T
FRONT	R810		nsp	nsp	RES.	5.6K OHM 1/5W J	CRD20TJ562T
FRONT	R811		nsp	nsp	RES.	2.7K OHM 1/5W J	CRD20TJ272T
FRONT	R812		nsp	nsp	RES.	2.2K OHM 1/5W J	CRD20TJ222T
FRONT	R813		nsp	nsp	RES.	1.5K OHM 1/5W J	CRD20TJ152T
FRONT	R814		nsp	nsp	RES.	1K OHM 1/5W J	CRD20TJ102T
FRONT	R815		nsp	nsp	RES.	820 OHM 1/5W J	CRD20TJ821T
FRONT	R816		nsp	nsp	RES.	560 OHM 1/5W J	CRD20TJ561T
FRONT	R817		nsp	nsp	RES.	680 OHM 1/5W J	CRD20TJ681T
FRONT	R818		nsp	nsp	RES.	5.6K OHM 1/5W J	CRD20TJ562T
FRONT	R819		nsp	nsp	RES.	2.7K OHM 1/5W J	CRD20TJ272T
FRONT	R820		nsp	nsp	RES.	2.2K OHM 1/5W J	CRD20TJ222T
FRONT	R821		nsp	nsp	RES.	1.5K OHM 1/5W J	CRD20TJ152T
FRONT	R822		nsp	nsp	RES.	1K OHM 1/5W J	CRD20TJ102T
FRONT	R823		nsp	nsp	RES.	820 OHM 1/5W J	CRD20TJ821T
FRONT	R824		nsp	nsp	RES.	560 OHM 1/5W J	CRD20TJ561T
FRONT	R825		nsp	nsp	RES.	680 OHM 1/5W J	CRD20TJ681T
FRONT	R826		nsp	nsp	RES.	5.6K OHM 1/5W J	CRD20TJ562T
FRONT	R827		nsp	nsp	RES.	2.7K OHM 1/5W J	CRD20TJ272T
FRONT	R828		nsp	nsp	RES.	2.2K OHM 1/5W J	CRD20TJ222T
FRONT	R829		nsp	nsp	RES.	1.5K OHM 1/5W J	CRD20TJ152T
FRONT	R830		nsp	nsp	RES.	1K OHM 1/5W J	CRD20TJ102T
FRONT	R831		nsp	nsp	RES.	10K OHM 1/5W J	CRD20TJ103T
FRONT	R833		nsp	nsp	RES.	68K OHM 1/5W J	CRD20TJ683T
FRONT	R845		nsp	nsp	RES.	100 OHM 1/5W J	CRD20TJ101T
FRONT	R876		nsp	nsp	RES.	820 OHM 1/5W J	CRD20TJ821T
FRONT	R877		nsp	nsp	RES.	560 OHM 1/5W J	CRD20TJ561T
FRONT	R879		nsp	nsp	RES.	680 OHM 1/5W J	CRD20TJ681T
FRONT	R901		nsp	nsp	RES.	10K OHM 1/5W J	CRD20TJ103T
FRONT	R902		nsp	nsp	RES.	10K OHM 1/5W J	CRD20TJ103T
FRONT	R903		nsp	nsp	RES.	10K OHM 1/5W J	CRD20TJ103T
FRONT	R904		nsp	nsp	RES.	10K OHM 1/5W J	CRD20TJ103T
FRONT	R905		nsp	nsp	RES.	10K OHM 1/5W J	CRD20TJ103T
FRONT	R906		nsp	nsp	RES.	10K OHM 1/5W J	CRD20TJ103T
FRONT	R907		nsp	nsp	RES.	10K OHM 1/5W J	CRD20TJ103T
FRONT	R908		nsp	nsp	RES.	10K OHM 1/5W J	CRD20TJ103T
FRONT	R909		nsp	nsp	RES.	10K OHM 1/5W J	CRD20TJ103T
FRONT	R910		nsp	nsp	RES.	10K OHM 1/5W J	CRD20TJ103T
FRONT	R911		nsp	nsp	RES.	10K OHM 1/5W J	CRD20TJ103T
FRONT	R912		nsp	nsp	RES.	10K OHM 1/5W J	CRD20TJ103T
FRONT	R913		nsp	nsp	RES.	10K OHM 1/5W J	CRD20TJ103T
FRONT	R914		nsp	nsp	RES.	10K OHM 1/5W J	CRD20TJ103T
FRONT	R915		nsp	nsp	RES.	10K OHM 1/5W J	CRD20TJ103T

NOTE : "nsp" PART IS LISTED FOR REFERENCE ONLY, MARANTZ WILL NOT SUPPLY THESE PARTS.

P.W.B. NAME	POS. NO.	VERS. COLOR	PART NO. (FOR EUR)	PART NO. (MZ)	PART NAME	DESCRIPTION	
FRONT	R916		nsp	nsp	RES.	10K OHM 1/5W J	CRD20TJ103T
FRONT	R917		nsp	nsp	RES.	47K OHM 1/5W J	CRD20TJ473T
FRONT	R918		nsp	nsp	RES.	47K OHM 1/5W J	CRD20TJ473T
FRONT	R919		nsp	nsp	RES.	47K OHM 1/5W J	CRD20TJ473T
FRONT	R920		nsp	nsp	RES.	47K OHM 1/5W J	CRD20TJ473T
FRONT	R921		nsp	nsp	RES.	47K OHM 1/5W J	CRD20TJ473T
FRONT	R922		nsp	nsp	RES.	47K OHM 1/5W J	CRD20TJ473T
FRONT	R923		nsp	nsp	RES.	47K OHM 1/5W J	CRD20TJ473T
FRONT	R924		nsp	nsp	RES.	47K OHM 1/5W J	CRD20TJ473T
FRONT	R925		nsp	nsp	RES.	47K OHM 1/5W J	CRD20TJ473T
FRONT	R926		nsp	nsp	RES.	47K OHM 1/5W J	CRD20TJ473T
FRONT	R927		nsp	nsp	RES.	47K OHM 1/5W J	CRD20TJ473T
FRONT	R928		nsp	nsp	RES.	47K OHM 1/5W J	CRD20TJ473T
FRONT	R929		nsp	nsp	RES.	47K OHM 1/5W J	CRD20TJ473T
FRONT	R930		nsp	nsp	RES.	47K OHM 1/5W J	CRD20TJ473T
FRONT	R931		nsp	nsp	RES.	47K OHM 1/5W J	CRD20TJ473T
FRONT	R932		nsp	nsp	RES.	47K OHM 1/5W J	CRD20TJ473T
FRONT	R933		nsp	nsp	RES.	47K OHM 1/5W J	CRD20TJ473T
FRONT	R934		nsp	nsp	RES.	47K OHM 1/5W J	CRD20TJ473T
FRONT	R935		nsp	nsp	RES.	47K OHM 1/5W J	CRD20TJ473T
FRONT	R936		nsp	nsp	RES.	47K OHM 1/5W J	CRD20TJ473T
FRONT	R937		nsp	nsp	RES.	47K OHM 1/5W J	CRD20TJ473T
FRONT	R938		nsp	nsp	RES.	47K OHM 1/5W J	CRD20TJ473T
FRONT	R939		nsp	nsp	RES.	47K OHM 1/5W J	CRD20TJ473T
FRONT	R940		nsp	nsp	RES.	47K OHM 1/5W J	CRD20TJ473T
FRONT	R941		nsp	nsp	RES.	47K OHM 1/5W J	CRD20TJ473T
FRONT	R942		nsp	nsp	RES.	47K OHM 1/5W J	CRD20TJ473T
FRONT	R943		nsp	nsp	RES.	47K OHM 1/5W J	CRD20TJ473T
FRONT	R944		nsp	nsp	RES.	47K OHM 1/5W J	CRD20TJ473T
FRONT	R945		nsp	nsp	RES.	47K OHM 1/5W J	CRD20TJ473T
FRONT	R946		nsp	nsp	RES.	47K OHM 1/5W J	CRD20TJ473T
FRONT	R947		nsp	nsp	RES.	47K OHM 1/5W J	CRD20TJ473T
FRONT	R948		nsp	nsp	RES.	47K OHM 1/5W J	CRD20TJ473T
FRONT	R949		nsp	nsp	RES.	47K OHM 1/5W J	CRD20TJ473T
FRONT	R950		nsp	nsp	RES.	47K OHM 1/5W J	CRD20TJ473T
FRONT	R951		nsp	nsp	RES.	47K OHM 1/5W J	CRD20TJ473T
FRONT	R952		nsp	nsp	RES.	47K OHM 1/5W J	CRD20TJ473T
FRONT	R953		nsp	nsp	RES.	47K OHM 1/5W J	CRD20TJ473T
FRONT	R968		nsp	nsp	RES.	10K OHM 1/5W J	CRD20TJ103T
FRONT	R969		nsp	nsp	RES.	220 OHM 1/5W J	CRD20TJ221T
FRONT	R970		nsp	nsp	RES.	10K OHM 1/5W J	CRD20TJ103T
FRONT	R971		nsp	nsp	RES.	270 OHM 1/5W J	CRD20TJ271T
FRONT	R972		nsp	nsp	RES.	220 OHM 1/5W J	CRD20TJ221T
FRONT	R973		nsp	nsp	RES.	47K OHM 1/5W J	CRD20TJ473T
FRONT	R974		nsp	nsp	RES.	220 OHM 1/5W J	CRD20TJ221T
FRONT	R975		nsp	nsp	RES.	220 OHM 1/5W J	CRD20TJ221T
FRONT	R976		nsp	nsp	RES.	47K OHM 1/5W J	CRD20TJ473T
FRONT	R977		nsp	nsp	RES.	4.7K OHM 1/5W J	CRD20TJ472T
FRONT	R978		nsp	nsp	RES.	470 OHM 1/5W J	CRD20TJ471T
FRONT	R981		nsp	nsp	RES.	4.7K OHM 1/5W J	CRD20TJ472T
FRONT	R982		nsp	nsp	RES.	2.2K OHM 1/5W J	CRD20TJ222T
FRONT	R984		nsp	nsp	RES.	4.7K OHM 1/5W J	CRD20TJ472T
FRONT	R986		nsp	nsp	RES.	12K OHM 1/5W J	CRD20TJ123T
FRONT	R989		nsp	nsp	RES.	330 OHM 1/5W J	CRD20TJ331T
FRONT	RC81		90M-HW100650R	90M-HW100650R	PHOTO UNIT	RPM6936-H4	HRVRPM6936H4
FRONT	SW71		90M-SP001210R	90M-SP001210R	SW	SKHV10910G TACT	CST1A012ZT
FRONT	SW72		90M-SP001210R	90M-SP001210R	SW	SKHV10910G TACT	CST1A012ZT
FRONT	SW73		90M-SP001210R	90M-SP001210R	SW	SKHV10910G TACT	CST1A012ZT
FRONT	SW74		90M-SP001210R	90M-SP001210R	SW	SKHV10910G TACT	CST1A012ZT
FRONT	SW76		90M-SP001210R	90M-SP001210R	SW	SKHV10910G TACT	CST1A012ZT
FRONT	SW77		90M-SP001210R	90M-SP001210R	SW	SKHV10910G TACT	CST1A012ZT
FRONT	SW79		90M-SP001210R	90M-SP001210R	SW	SKHV10910G TACT	CST1A012ZT
FRONT	SW81		90M-SP001210R	90M-SP001210R	SW	SKHV10910G TACT	CST1A012ZT
FRONT	SW82		90M-SP001210R	90M-SP001210R	SW	SKHV10910G TACT	CST1A012ZT
FRONT	SW83		90M-SP001210R	90M-SP001210R	SW	SKHV10910G TACT	CST1A012ZT
FRONT	SW84		90M-SP001210R	90M-SP001210R	SW	SKHV10910G TACT	CST1A012ZT
FRONT	SW85		90M-SP001210R	90M-SP001210R	SW	SKHV10910G TACT	CST1A012ZT

NOTE : "nsp" PART IS LISTED FOR REFERENCE ONLY, MARANTZ WILL NOT SUPPLY THESE PARTS.

P.W.B. NAME	POS. NO.	VERS. COLOR	PART NO. (FOR EUR)	PART NO. (MZ)	PART NAME	DESCRIPTION	
FRONT	SW86		90M-SP001210R	90M-SP001210R	SW	SKHV10910G TACT	CST1A012ZT
FRONT	SW87		90M-SP001210R	90M-SP001210R	SW	SKHV10910G TACT	CST1A012ZT
FRONT	SW88		90M-SP001210R	90M-SP001210R	SW	SKHV10910G TACT	CST1A012ZT
FRONT	SW89		90M-SP001210R	90M-SP001210R	SW	SKHV10910G TACT	CST1A012ZT
FRONT	SW90		90M-SP001210R	90M-SP001210R	SW	SKHV10910G TACT	CST1A012ZT
FRONT	SW91		90M-SP001210R	90M-SP001210R	SW	SKHV10910G TACT	CST1A012ZT
FRONT	SW92		90M-SP001210R	90M-SP001210R	SW	SKHV10910G TACT	CST1A012ZT
FRONT	SW95		90M-SP001210R	90M-SP001210R	SW	SKHV10910G TACT	CST1A012ZT
FRONT	SW96		90M-SP001210R	90M-SP001210R	SW	SKHV10910G TACT	CST1A012ZT
					GUIDE PWB		
GUIDE	CN53		nsp	nsp	CONN.	3PIN ANGLE	CJP03GB46ZY
GUIDE	CN55		nsp	nsp	CONN.	4P ANGLE	CJP04GB46ZY
GUIDE	CN85		nsp	nsp	CONN.	3PIN ANGLE	CJP03GB46ZY
					H/P PWB (CUP11869Z-4)		
H/P	BN17		nsp	nsp	CORD	WIRE ASSY	CWB1B905540BN
H/P	C874		nsp	nsp	CER. CAP.	100PF 50V K	HCBS1H101KBT
H/P	C875		nsp	nsp	CER. CAP.	100PF 50V K	HCBS1H101KBT
H/P	C876		nsp	nsp	CER. CAP.	0.1UF 50V Z	HCBS1H104ZFT
H/P	JK81	/N1B	90M-YT003160R	90M-YT003160R	TERMINAL	HTJ-064-05NG HEADPHONE JACK	CJJ2E020Z
H/P	JK81	/N1G	90M-YT003160R	90M-YT003160R	TERMINAL	HTJ-064-05NG HEADPHONE JACK	CJJ2E020Z
H/P	JK81	/N1S	90M-YT004500R	90M-YT004500R	TERMINAL	JACK HEADPHONE(SILVER)	CJJ2E026Z
H/P	JK81	/U1B	nsp	90M-YT003160R	TERMINAL	HTJ-064-05NG HEADPHONE JACK	CJJ2E020Z
H/P	JW12		nsp	nsp	CORD	WIRE ASSY	CWE8102050RV
H/P	JW22		nsp	nsp	CORD	WIRE ASSY	CWE8102050RV
H/P	R846		nsp	nsp	RES.	4.7K OHM 1/5W J	CRD20TJ472T
H/P	R847		nsp	nsp	RES.	470 OHM 1/5W J	CRD20TJ471T
					HDMI PWB (CUP11875Z)		
HDMI	BK11		nsp	nsp	BRACKET	BRACKET FOR PWB	CMD1A569
HDMI	BK12		nsp	nsp	BRACKET	BRACKET FOR PWB	CMD1A569
HDMI	BN31		nsp	nsp	CORD	WIRE ASSY	CWB1D906060BM
HDMI	C101		nsp	00MDK96104300	CER. CAP.	0.1UF 25V ZF	HCUS1E104ZF
HDMI	C102		nsp	00MDK96104300	CER. CAP.	0.1UF 25V ZF	HCUS1E104ZF
HDMI	C103		nsp	00MDK96104300	CER. CAP.	0.1UF 25V ZF	HCUS1E104ZF
HDMI	C104		nsp	00MDK96104300	CER. CAP.	0.1UF 25V ZF	HCUS1E104ZF
HDMI	C105		nsp	00MDK96104300	CER. CAP.	0.1UF 25V ZF	HCUS1E104ZF
HDMI	C106		nsp	00MDK96104300	CER. CAP.	0.1UF 25V ZF	HCUS1E104ZF
HDMI	C107		nsp	00MDK96104300	CER. CAP.	0.1UF 25V ZF	HCUS1E104ZF
HDMI	C108		nsp	00MDK96104300	CER. CAP.	0.1UF 25V ZF	HCUS1E104ZF
HDMI	C109		nsp	00MDK96104300	CER. CAP.	0.1UF 25V ZF	HCUS1E104ZF
HDMI	C110		nsp	00MDK96104300	CER. CAP.	0.1UF 25V ZF	HCUS1E104ZF
HDMI	C111		nsp	00MDK96104300	CER. CAP.	0.1UF 25V ZF	HCUS1E104ZF
HDMI	C112		nsp	00MDK96104300	CER. CAP.	0.1UF 25V ZF	HCUS1E104ZF
HDMI	C113		nsp	00MDK96104300	CER. CAP.	0.1UF 25V ZF	HCUS1E104ZF
HDMI	C114		nsp	00MDK96104300	CER. CAP.	0.1UF 25V ZF	HCUS1E104ZF
HDMI	C115		nsp	00MDK96104300	CER. CAP.	0.1UF 25V ZF	HCUS1E104ZF
HDMI	C116		nsp	00MDK96104300	CER. CAP.	0.1UF 25V ZF	HCUS1E104ZF
HDMI	C117		nsp	00MDK96104300	CER. CAP.	0.1UF 25V ZF	HCUS1E104ZF
HDMI	C118		nsp	00MDK96104300	CER. CAP.	0.1UF 25V ZF	HCUS1E104ZF
HDMI	C119		nsp	00MDK96104300	CER. CAP.	0.1UF 25V ZF	HCUS1E104ZF
HDMI	C120		nsp	00MDK96104300	CER. CAP.	0.1UF 25V ZF	HCUS1E104ZF
HDMI	C121		nsp	00MDK96104300	CER. CAP.	0.1UF 25V ZF	HCUS1E104ZF
HDMI	C122		nsp	00MDK96104300	CER. CAP.	0.1UF 25V ZF	HCUS1E104ZF
HDMI	C123		nsp	00MDK96104300	CER. CAP.	0.1UF 25V ZF	HCUS1E104ZF
HDMI	C124		nsp	00MDK96103300	CER. CAP.	0.01UF 50V KC	HCUS1H103KC
HDMI	C125		nsp	00MDK96103300	CER. CAP.	0.01UF 50V KC	HCUS1H103KC
HDMI	C126		nsp	00MDK96104300	CER. CAP.	0.1UF 25V ZF	HCUS1E104ZF
HDMI	C127		nsp	00MDK96104300	CER. CAP.	0.1UF 25V ZF	HCUS1E104ZF
HDMI	C128		nsp	00MDK96104300	CER. CAP.	0.1UF 25V ZF	HCUS1E104ZF
HDMI	C129		nsp	00MDK96104300	CER. CAP.	0.1UF 25V ZF	HCUS1E104ZF
HDMI	C130		nsp	00MDK96104300	CER. CAP.	0.1UF 25V ZF	HCUS1E104ZF
HDMI	C131		nsp	00MDK96104300	CER. CAP.	0.1UF 25V ZF	HCUS1E104ZF
HDMI	C132		nsp	00MDK96104300	CER. CAP.	0.1UF 25V ZF	HCUS1E104ZF
HDMI	C133		nsp	00MDK96104300	CER. CAP.	0.1UF 25V ZF	HCUS1E104ZF
HDMI	C134		nsp	00MDK96104300	CER. CAP.	0.1UF 25V ZF	HCUS1E104ZF
HDMI	C135		nsp	00MDK96104300	CER. CAP.	0.1UF 25V ZF	HCUS1E104ZF
HDMI	C303		nsp	00MDK96104300	CER. CAP.	0.1UF 50V K	CCUS1H104KC
HDMI	C304		nsp	00MDK96104300	CER. CAP.	0.1UF 50V K	CCUS1H104KC

NOTE : "nsp" PART IS LISTED FOR REFERENCE ONLY, MARANTZ WILL NOT SUPPLY THESE PARTS.

P.W.B. NAME	POS. NO.	VERS. COLOR	PART NO. (FOR EUR)	PART NO. (MZ)	PART NAME	DESCRIPTION	
HDMI	C305		nsp	00MDK96104300	CER. CAP.	0.1UF 25V ZF	HCUS1E104ZF
HDMI	C306		nsp	00MOA47602520	ELECT CAP.	47UF 25V	CCEA1EH470T
HDMI	C307		nsp	00MOA47602520	ELECT CAP.	47UF 25V	CCEA1EH470T
HDMI	C308		nsp	00MDK96104300	CER. CAP.	0.1UF 25V ZF	HCUS1E104ZF
HDMI	C309		nsp	00MDK96104300	CER. CAP.	0.1UF 25V ZF	HCUS1E104ZF
HDMI	C310		nsp	00MDK96104300	CER. CAP.	0.1UF 25V ZF	HCUS1E104ZF
HDMI	C311		nsp	00MDK96104300	CER. CAP.	0.1UF 25V ZF	HCUS1E104ZF
HDMI	C312		nsp	00MDK96104300	CER. CAP.	0.1UF 25V ZF	HCUS1E104ZF
HDMI	C313		nsp	00MDK96104300	CER. CAP.	0.1UF 25V ZF	HCUS1E104ZF
HDMI	C314		nsp	00MDK96104300	CER. CAP.	0.1UF 25V ZF	HCUS1E104ZF
HDMI	C315		nsp	00MOA47602520	ELECT CAP.	47UF 25V	CCEA1EH470T
HDMI	C316		nsp	00MDK96104300	CER. CAP.	0.1UF 25V ZF	HCUS1E104ZF
HDMI	C317		nsp	00MDK96104300	CER. CAP.	0.1UF 25V ZF	HCUS1E104ZF
HDMI	C318		nsp	00MDK96104300	CER. CAP.	0.1UF 25V ZF	HCUS1E104ZF
HDMI	C319		nsp	00MDK96104300	CER. CAP.	0.1UF 25V ZF	HCUS1E104ZF
HDMI	C320		nsp	00MDK96104300	CER. CAP.	0.1UF 25V ZF	HCUS1E104ZF
HDMI	C321		nsp	00MDK96104300	CER. CAP.	0.1UF 25V ZF	HCUS1E104ZF
HDMI	C322		nsp	00MDK96104300	CER. CAP.	0.1UF 25V ZF	HCUS1E104ZF
HDMI	C323		nsp	00MDK96104300	CER. CAP.	0.1UF 25V ZF	HCUS1E104ZF
HDMI	C324		nsp	00MDK96104300	CER. CAP.	0.1UF 25V ZF	HCUS1E104ZF
HDMI	C325		nsp	00MDK96104300	CER. CAP.	0.1UF 25V ZF	HCUS1E104ZF
HDMI	C326		nsp	00MDK96104300	CER. CAP.	0.1UF 25V ZF	HCUS1E104ZF
HDMI	C327		nsp	00MDK96104300	CER. CAP.	0.1UF 25V ZF	HCUS1E104ZF
HDMI	C328		nsp	00MDK96104300	CER. CAP.	0.1UF 25V ZF	HCUS1E104ZF
HDMI	C329		nsp	00MDK96104300	CER. CAP.	0.1UF 25V ZF	HCUS1E104ZF
HDMI	C330		nsp	00MDK96104300	CER. CAP.	0.1UF 25V ZF	HCUS1E104ZF
HDMI	C331		nsp	00MDK96104300	CER. CAP.	0.1UF 25V ZF	HCUS1E104ZF
HDMI	C332		nsp	00MDK96104300	CER. CAP.	0.1UF 25V ZF	HCUS1E104ZF
HDMI	C333		nsp	00MDK96104300	CER. CAP.	0.1UF 25V ZF	HCUS1E104ZF
HDMI	C334		nsp	00MDK96104300	CER. CAP.	0.1UF 25V ZF	HCUS1E104ZF
HDMI	C335		nsp	00MDK96104300	CER. CAP.	0.1UF 25V ZF	HCUS1E104ZF
HDMI	C336		nsp	00MDK96104300	CER. CAP.	0.1UF 25V ZF	HCUS1E104ZF
HDMI	C337		nsp	00MDK96104300	CER. CAP.	0.1UF 25V ZF	HCUS1E104ZF
HDMI	C338		nsp	00MDK96104300	CER. CAP.	0.1UF 25V ZF	HCUS1E104ZF
HDMI	C339		nsp	00MDK96104300	CER. CAP.	0.1UF 25V ZF	HCUS1E104ZF
HDMI	C340		nsp	00MDD95200300	CER. CAP.	20PF 50V J	CCUS1H200JA
HDMI	C341		nsp	00MDD95200300	CER. CAP.	20PF 50V J	CCUS1H200JA
HDMI	C342		nsp	00MDK96104300	CER. CAP.	0.1UF 25V ZF	HCUS1E104ZF
HDMI	C344		nsp	00MDK96104300	CER. CAP.	0.1UF 25V ZF	HCUS1E104ZF
HDMI	C345		nsp	00MDK96104300	CER. CAP.	0.1UF 25V ZF	HCUS1E104ZF
HDMI	C347		nsp	00MDK96104300	CER. CAP.	0.1UF 25V ZF	HCUS1E104ZF
HDMI	C348		nsp	00MDK96104300	CER. CAP.	0.1UF 25V ZF	HCUS1E104ZF
HDMI	C349		nsp	00MDK96104300	CER. CAP.	0.1UF 25V ZF	HCUS1E104ZF
HDMI	C350		nsp	00MOA10605020	ELECT CAP.	10UF 50V	CCEA1HH100T
HDMI	C351		nsp	00MDK96104300	CER. CAP.	0.1UF 25V ZF	HCUS1E104ZF
HDMI	C352		nsp	00MOA10505020	ELECT CAP.	1UF 50V	CCEA1HH1R0T
HDMI	C353		nsp	00MDK96104300	CER. CAP.	0.1UF 25V ZF	HCUS1E104ZF
HDMI	C354		nsp	00MDK96104300	CER. CAP.	0.1UF 25V ZF	HCUS1E104ZF
HDMI	C355		nsp	00MDK96104300	CER. CAP.	0.1UF 25V ZF	HCUS1E104ZF
HDMI	C356		nsp	00MDK96104300	CER. CAP.	0.1UF 25V ZF	HCUS1E104ZF
HDMI	C357		nsp	00MDK96104300	CER. CAP.	0.1UF 25V ZF	HCUS1E104ZF
HDMI	C358		nsp	00MDK96104300	CER. CAP.	0.1UF 25V ZF	HCUS1E104ZF
HDMI	C359		nsp	00MDK96104300	CER. CAP.	0.1UF 25V ZF	HCUS1E104ZF
HDMI	C360		nsp	00MDK96104300	CER. CAP.	0.1UF 25V ZF	HCUS1E104ZF
HDMI	C361		nsp	00MDK96104300	CER. CAP.	0.1UF 25V ZF	HCUS1E104ZF
HDMI	C362		nsp	00MOA47602520	ELECT CAP.	47UF 25V	CCEA1EH470T
HDMI	C363		nsp	00MOA47602520	ELECT CAP.	47UF 25V	CCEA1EH470T
HDMI	C364		nsp	00MDK96104300	CER. CAP.	0.1UF 25V ZF	HCUS1E104ZF
HDMI	C365		nsp	00MDK96104300	CER. CAP.	0.1UF 25V ZF	HCUS1E104ZF
HDMI	C366		nsp	00MDK96104300	CER. CAP.	0.1UF 25V ZF	HCUS1E104ZF
HDMI	C367		nsp	00MDK96104300	CER. CAP.	0.1UF 25V ZF	HCUS1E104ZF
HDMI	C368		nsp	00MDK96104300	CER. CAP.	0.1UF 25V ZF	HCUS1E104ZF
HDMI	C369		nsp	00MOA47602520	ELECT CAP.	47UF 25V	CCEA1EH470T
HDMI	C370		nsp	00MDK96104300	CER. CAP.	0.1UF 25V ZF	HCUS1E104ZF
HDMI	C371		nsp	00MDK96104300	CER. CAP.	0.1UF 25V ZF	HCUS1E104ZF
HDMI	C372		nsp	00MDK96104300	CER. CAP.	0.1UF 25V ZF	HCUS1E104ZF
HDMI	C373		nsp	00MOA10605020	ELECT CAP.	10UF 50V	CCEA1HH100T

NOTE : "nsp" PART IS LISTED FOR REFERENCE ONLY, MARANTZ WILL NOT SUPPLY THESE PARTS.

P.W.B. NAME	POS. NO.	VERS. COLOR	PART NO. (FOR EUR)	PART NO. (MZ)	PART NAME	DESCRIPTION	
HDMI	C374		nsp	00MDK96104300	CER. CAP.	0.1UF 25V ZF	HCUS1E104ZF
HDMI	C375		nsp	00MDK96104300	CER. CAP.	0.1UF 25V ZF	HCUS1E104ZF
HDMI	C377		nsp	00MDK96104300	CER. CAP.	0.1UF 25V ZF	HCUS1E104ZF
HDMI	C378		nsp	00MDK96104300	CER. CAP.	0.1UF 25V ZF	HCUS1E104ZF
HDMI	C379		nsp	00MDK96104300	CER. CAP.	0.1UF 25V ZF	HCUS1E104ZF
HDMI	C380		nsp	00MDK96104300	CER. CAP.	0.1UF 25V ZF	HCUS1E104ZF
HDMI	C381		nsp	00MDK96104300	CER. CAP.	0.1UF 25V ZF	HCUS1E104ZF
HDMI	C382		nsp	00MDK96104300	CER. CAP.	0.1UF 25V ZF	HCUS1E104ZF
HDMI	C383		nsp	00MDK96104300	CER. CAP.	0.1UF 25V ZF	HCUS1E104ZF
HDMI	C384		nsp	00MDK96104300	CER. CAP.	0.1UF 25V ZF	HCUS1E104ZF
HDMI	C385		nsp	00MDK96104300	CER. CAP.	0.1UF 25V ZF	HCUS1E104ZF
HDMI	C386		nsp	00MDK96104300	CER. CAP.	0.1UF 25V ZF	HCUS1E104ZF
HDMI	C387		nsp	00MOA47602520	ELECT CAP.	47UF 25V	CCEA1EH470T
HDMI	C388		nsp	00MOA47602520	ELECT CAP.	47UF 25V	CCEA1EH470T
HDMI	C389		nsp	00MDK96104300	CER. CAP.	0.1UF 25V ZF	HCUS1E104ZF
HDMI	C390		nsp	00MDK96104300	CER. CAP.	0.1UF 25V ZF	HCUS1E104ZF
HDMI	C391		nsp	00MDK96104300	CER. CAP.	0.1UF 25V ZF	HCUS1E104ZF
HDMI	C392		nsp	00MDK96104300	CER. CAP.	0.1UF 25V ZF	HCUS1E104ZF
HDMI	C393		nsp	00MDK96104300	CER. CAP.	0.1UF 25V ZF	HCUS1E104ZF
HDMI	C394		nsp	00MOA47602520	ELECT CAP.	47UF 25V	CCEA1EH470T
HDMI	C395		nsp	00MDK96104300	CER. CAP.	0.1UF 25V ZF	HCUS1E104ZF
HDMI	C396		nsp	00MOA10505020	ELECT CAP.	1UF 50V	CCEA1HH1R0T
HDMI	C397		nsp	00MDK96104300	CER. CAP.	0.1UF 25V ZF	HCUS1E104ZF
HDMI	C398		nsp	00MDK96104300	CER. CAP.	0.1UF 25V ZF	HCUS1E104ZF
HDMI	C399		nsp	00MDK96104300	CER. CAP.	0.1UF 25V ZF	HCUS1E104ZF
HDMI	C400		nsp	00MDK96104300	CER. CAP.	0.1UF 25V ZF	HCUS1E104ZF
HDMI	C601		nsp	00MOA10605020	ELECT CAP.	10UF 50V	CCEA1HH100T
HDMI	C602		nsp	00MOA10605020	ELECT CAP.	10UF 50V	CCEA1HH100T
HDMI	C603		nsp	00MOA10605020	ELECT CAP.	10UF 50V	CCEA1HH100T
HDMI	C604		nsp	00MDK96104300	CER. CAP.	0.1UF 25V ZF	HCUS1E104ZF
HDMI	C605		nsp	00MDK96104300	CER. CAP.	0.1UF 25V ZF	HCUS1E104ZF
HDMI	C606		nsp	00MOA10701620	ELECT CAP.	100UF 16V	CCEA1CH101T
HDMI	C607		nsp	00MDK96104300	CER. CAP.	0.1UF 25V ZF	HCUS1E104ZF
HDMI	C608		nsp	00MOA10605020	ELECT CAP.	10UF 50V	CCEA1HH100T
HDMI	C609		nsp	00MDK96104300	CER. CAP.	0.1UF 25V ZF	HCUS1E104ZF
HDMI	C610		nsp	00MDK96104300	CER. CAP.	0.1UF 25V ZF	HCUS1E104ZF
HDMI	C611		nsp	00MDK96104300	CER. CAP.	0.1UF 25V ZF	HCUS1E104ZF
HDMI	C612		nsp	00MDK96104300	CER. CAP.	0.1UF 25V ZF	HCUS1E104ZF
HDMI	C613		nsp	00MDK96104300	CER. CAP.	0.1UF 25V ZF	HCUS1E104ZF
HDMI	C614		nsp	00MDK96104300	CER. CAP.	0.1UF 25V ZF	HCUS1E104ZF
HDMI	C615		nsp	00MDK96102300	CER. CAP.	1000PF 50V KC	HCUS1H102KC
HDMI	C616		nsp	00MDK96104300	CER. CAP.	0.1UF 25V ZF	HCUS1E104ZF
HDMI	C617		nsp	00MDK96104300	CER. CAP.	0.1UF 25V ZF	HCUS1E104ZF
HDMI	C618		nsp	00MDK96104300	CER. CAP.	0.1UF 25V ZF	HCUS1E104ZF
HDMI	C619		nsp	00MDK96104300	CER. CAP.	0.1UF 25V ZF	HCUS1E104ZF
HDMI	C620		nsp	00MDK96104300	CER. CAP.	0.1UF 25V ZF	HCUS1E104ZF
HDMI	C621		nsp	00MDD95470300	CER. CAP.	47PF 50V JA	CCUS1H470JA
HDMI	C622		nsp	00MDD95470300	CER. CAP.	47PF 50V JA	CCUS1H470JA
HDMI	C623		nsp	00MDK96104300	CER. CAP.	0.1UF 25V ZF	HCUS1E104ZF
HDMI	C624		nsp	90M-DK900100R	CER. CAP.	0.082UF 50V K	CCUS1H823KC
HDMI	C625		nsp	00MDK96103300	CER. CAP.	0.01UF 50V KC	HCUS1H103KC
HDMI	C626		nsp	00MDK96104300	CER. CAP.	0.1UF 25V ZF	HCUS1E104ZF
HDMI	C627		nsp	00MDK96103300	CER. CAP.	0.01UF 50V KC	HCUS1H103KC
HDMI	C628		nsp	00MDK96104300	CER. CAP.	0.1UF 25V ZF	HCUS1E104ZF
HDMI	C629		90M-EQ000040R	90M-EQ000040R	ELECT CAP.	10UF 25V NON-POLAR	CCEA1EN100T
HDMI	C630		nsp	00MDK96104300	CER. CAP.	0.1UF 25V ZF	HCUS1E104ZF
HDMI	C631		nsp	00MDK96104300	CER. CAP.	0.1UF 25V ZF	HCUS1E104ZF
HDMI	C632		nsp	00MOA10701620	ELECT CAP.	100UF 16V	CCEA1CH101T
HDMI	C633		nsp	00MDK96104300	CER. CAP.	0.1UF 25V ZF	HCUS1E104ZF
HDMI	C634		nsp	00MOA10605020	ELECT CAP.	10UF 50V	CCEA1HH100T
HDMI	C635		nsp	00MDK96104300	CER. CAP.	0.1UF 25V ZF	HCUS1E104ZF
HDMI	C636		nsp	00MOA10605020	ELECT CAP.	10UF 50V	CCEA1HH100T
HDMI	C637		nsp	00MDK96103300	CER. CAP.	0.01UF 50V KC	HCUS1H103KC
HDMI	C638		nsp	00MDK96104300	CER. CAP.	0.1UF 25V ZF	HCUS1E104ZF
HDMI	C639		90M-EQ000040R	90M-EQ000040R	ELECT CAP.	10UF 25V NON-POLAR	CCEA1EN100T
HDMI	C640		nsp	00MDK96104300	CER. CAP.	0.1UF 25V ZF	HCUS1E104ZF
HDMI	C641		nsp	00MDK96104300	CER. CAP.	0.1UF 25V ZF	HCUS1E104ZF

NOTE : "nsp" PART IS LISTED FOR REFERENCE ONLY, MARANTZ WILL NOT SUPPLY THESE PARTS.

P.W.B. NAME	POS. NO.	VERS. COLOR	PART NO. (FOR EUR)	PART NO. (MZ)	PART NAME	DESCRIPTION	
HDMI	C642		nsp	00MDK96104300	CER. CAP.	0.1UF 25V ZF	HCUS1E104ZF
HDMI	C643		nsp	00MDK96104300	CER. CAP.	0.1UF 25V ZF	HCUS1E104ZF
HDMI	C644		nsp	00MDK96104300	CER. CAP.	0.1UF 25V ZF	HCUS1E104ZF
HDMI	C645		nsp	00MOA10701620	ELECT CAP.	100UF 16V	CCEA1CH101T
HDMI	C646		nsp	00MDK96104300	CER. CAP.	0.1UF 25V ZF	HCUS1E104ZF
HDMI	C647		nsp	00MDK96104300	CER. CAP.	0.1UF 25V ZF	HCUS1E104ZF
HDMI	C648		nsp	00MDK96104300	CER. CAP.	0.1UF 25V ZF	HCUS1E104ZF
HDMI	C649		nsp	00MDK96104300	CER. CAP.	0.1UF 25V ZF	HCUS1E104ZF
HDMI	C650		nsp	00MDK96104300	CER. CAP.	0.1UF 25V ZF	HCUS1E104ZF
HDMI	C651		nsp	00MDK96104300	CER. CAP.	0.1UF 25V ZF	HCUS1E104ZF
HDMI	C652		nsp	00MDK96104300	CER. CAP.	0.1UF 25V ZF	HCUS1E104ZF
HDMI	C653		nsp	00MOA10701620	ELECT CAP.	100UF 16V	CCEA1CH101T
HDMI	C654		nsp	00MDK96104300	CER. CAP.	0.1UF 25V ZF	HCUS1E104ZF
HDMI	C655		nsp	00MDK96104300	CER. CAP.	0.1UF 25V ZF	HCUS1E104ZF
HDMI	C656		nsp	00MDK96104300	CER. CAP.	0.1UF 25V ZF	HCUS1E104ZF
HDMI	C657		nsp	00MDK96104300	CER. CAP.	0.1UF 25V ZF	HCUS1E104ZF
HDMI	C658		nsp	00MDK96104300	CER. CAP.	0.1UF 25V ZF	HCUS1E104ZF
HDMI	C659		nsp	00MDK96104300	CER. CAP.	0.1UF 25V ZF	HCUS1E104ZF
HDMI	C660		nsp	00MDK96104300	CER. CAP.	0.1UF 25V ZF	HCUS1E104ZF
HDMI	C661		nsp	00MDK96104300	CER. CAP.	0.1UF 25V ZF	HCUS1E104ZF
HDMI	C662		nsp	00MDK96104300	CER. CAP.	0.1UF 25V ZF	HCUS1E104ZF
HDMI	C663		nsp	00MDK96104300	CER. CAP.	0.1UF 25V ZF	HCUS1E104ZF
HDMI	C664		nsp	00MDK96104300	CER. CAP.	0.1UF 25V ZF	HCUS1E104ZF
HDMI	C665		nsp	00MDK96104300	CER. CAP.	0.1UF 25V ZF	HCUS1E104ZF
HDMI	C666		nsp	00MDK96104300	CER. CAP.	0.1UF 25V ZF	HCUS1E104ZF
HDMI	C667		nsp	00MDK96104300	CER. CAP.	0.1UF 25V ZF	HCUS1E104ZF
HDMI	C668		nsp	00MDK96104300	CER. CAP.	0.1UF 25V ZF	HCUS1E104ZF
HDMI	C669		nsp	00MOA10701620	ELECT CAP.	100UF 16V	CCEA1CH101T
HDMI	C670		nsp	00MDK96104300	CER. CAP.	0.1UF 25V ZF	HCUS1E104ZF
HDMI	C671		nsp	00MDK96104300	CER. CAP.	0.1UF 25V ZF	HCUS1E104ZF
HDMI	C672		nsp	00MDK96104300	CER. CAP.	0.1UF 25V ZF	HCUS1E104ZF
HDMI	C673		nsp	00MDK96104300	CER. CAP.	0.1UF 25V ZF	HCUS1E104ZF
HDMI	C674		nsp	00MDK96104300	CER. CAP.	0.1UF 25V ZF	HCUS1E104ZF
HDMI	C675		nsp	00MDK96104300	CER. CAP.	0.1UF 25V ZF	HCUS1E104ZF
HDMI	C676		nsp	00MDK96104300	CER. CAP.	0.1UF 25V ZF	HCUS1E104ZF
HDMI	C678		nsp	00MOA10701620	ELECT CAP.	100UF 16V	CCEA1CH101T
HDMI	C679		nsp	00MDK96104300	CER. CAP.	0.1UF 25V ZF	HCUS1E104ZF
HDMI	C680		nsp	00MDK96104300	CER. CAP.	0.1UF 25V ZF	HCUS1E104ZF
HDMI	C681		nsp	00MDK96104300	CER. CAP.	0.1UF 25V ZF	HCUS1E104ZF
HDMI	C682		nsp	00MDK96104300	CER. CAP.	0.1UF 25V ZF	HCUS1E104ZF
HDMI	C683		nsp	00MDK96104300	CER. CAP.	0.1UF 25V ZF	HCUS1E104ZF
HDMI	C684		nsp	00MDK96104300	CER. CAP.	0.1UF 25V ZF	HCUS1E104ZF
HDMI	C685		nsp	00MDK96104300	CER. CAP.	0.1UF 25V ZF	HCUS1E104ZF
HDMI	C686		nsp	00MDK96104300	CER. CAP.	0.1UF 25V ZF	HCUS1E104ZF
HDMI	C687		nsp	00MDK96104300	CER. CAP.	0.1UF 25V ZF	HCUS1E104ZF
HDMI	C688		nsp	00MDK96104300	CER. CAP.	0.1UF 25V ZF	HCUS1E104ZF
HDMI	C689		nsp	00MOA10701620	ELECT CAP.	100UF 16V	CCEA1CH101T
HDMI	C690		nsp	00MDK96104300	CER. CAP.	0.1UF 25V ZF	HCUS1E104ZF
HDMI	C691		nsp	00MDK96821300	CER. CAP.	820PF 50V J	HCUS1H821JA
HDMI	C692		nsp	00MDK96392300	CER. CAP.	3900PF 50V K	HCUS1H392KB
HDMI	C693		nsp	00MDK96104300	CER. CAP.	0.1UF 25V ZF	HCUS1E104ZF
HDMI	C694		nsp	00MDK96104300	CER. CAP.	0.1UF 25V ZF	HCUS1E104ZF
HDMI	C695		nsp	00MDK96104300	CER. CAP.	0.1UF 25V ZF	HCUS1E104ZF
HDMI	C696		nsp	00MDK96104300	CER. CAP.	0.1UF 25V ZF	HCUS1E104ZF
HDMI	C697		nsp	00MOA10701620	ELECT CAP.	100UF 16V	CCEA1CH101T
HDMI	C698		nsp	00MDK96104300	CER. CAP.	0.1UF 25V ZF	HCUS1E104ZF
HDMI	C699		nsp	00MOA10701620	ELECT CAP.	100UF 16V	CCEA1CH101T
HDMI	C801		nsp	00MOA47602520	ELECT CAP.	47UF 25V	CCEA1EH470T
HDMI	C802		nsp	00MDD95220300	CER. CAP.	22PF 50V JA	HCUS1H220JA
HDMI	C803		nsp	00MDD91090300	CER. CAP.	9PF 50V JA	CCUS1H9R0JA
HDMI	C804		nsp	00MDD95220300	CER. CAP.	22PF 50V JA	HCUS1H220JA
HDMI	C805		nsp	00MOA10605020	ELECT CAP.	10UF 50V	CCEA1HH100T
HDMI	C806		nsp	00MDK96103300	CER. CAP.	0.01UF 50V KC	HCUS1H103KC
HDMI	C807		nsp	00MOA10605020	ELECT CAP.	10UF 50V	CCEA1HH100T
HDMI	C808		nsp	00MOA47602520	ELECT CAP.	47UF 25V	CCEA1EH470T
HDMI	C809		nsp	00MDD95220300	CER. CAP.	22PF 50V JA	HCUS1H220JA
HDMI	C810		nsp	00MDD91090300	CER. CAP.	9PF 50V JA	CCUS1H9R0JA

NOTE : "nsp" PART IS LISTED FOR REFERENCE ONLY, MARANTZ WILL NOT SUPPLY THESE PARTS.

P.W.B. NAME	POS. NO.	VERS. COLOR	PART NO. (FOR EUR)	PART NO. (MZ)	PART NAME	DESCRIPTION	
HDMI	C811		nsp	00MDD95220300	CER. CAP.	22PF 50V JA	HCUS1H220JA
HDMI	C812		nsp	00MOA10605020	ELECT CAP.	10UF 50V	CCEA1HH100T
HDMI	C813		nsp	00MDK96103300	CER. CAP.	0.01UF 50V KC	HCUS1H103KC
HDMI	C814		nsp	00MDK96104300	CER. CAP.	0.1UF 25V ZF	HCUS1E104ZF
HDMI	C815		nsp	00MDD95220300	CER. CAP.	22PF 50V JA	HCUS1H220JA
HDMI	C816		nsp	00MDD91090300	CER. CAP.	9PF 50V JA	CCUS1H9R0JA
HDMI	C817		nsp	00MDD95220300	CER. CAP.	22PF 50V JA	HCUS1H220JA
HDMI	C818		nsp	00MDK96104300	CER. CAP.	0.1UF 25V ZF	HCUS1E104ZF
HDMI	C819		nsp	00MDK96103300	CER. CAP.	0.01UF 50V KC	HCUS1H103KC
HDMI	C820		nsp	00MOA47602520	ELECT CAP.	47UF 25V	CCEA1EH470T
HDMI	C821		nsp	00MDD95220300	CER. CAP.	22PF 50V JA	HCUS1H220JA
HDMI	C822		nsp	00MDD91090300	CER. CAP.	9PF 50V JA	CCUS1H9R0JA
HDMI	C823		nsp	00MDD95220300	CER. CAP.	22PF 50V JA	HCUS1H220JA
HDMI	C824		nsp	00MDK96103300	CER. CAP.	0.01UF 50V KC	HCUS1H103KC
HDMI	C825		nsp	00MOA10605020	ELECT CAP.	10UF 50V	CCEA1HH100T
HDMI	C826		nsp	00MOA47602520	ELECT CAP.	47UF 25V	CCEA1EH470T
HDMI	C827		nsp	00MDD95220300	CER. CAP.	22PF 50V JA	HCUS1H220JA
HDMI	C828		nsp	00MDD91090300	CER. CAP.	9PF 50V JA	CCUS1H9R0JA
HDMI	C829		nsp	00MDD95220300	CER. CAP.	22PF 50V JA	HCUS1H220JA
HDMI	C830		nsp	00MDK96103300	CER. CAP.	0.01UF 50V KC	HCUS1H103KC
HDMI	C831		nsp	00MOA47602520	ELECT CAP.	47UF 25V	CCEA1EH470T
HDMI	C832		nsp	00MDD95220300	CER. CAP.	22PF 50V JA	HCUS1H220JA
HDMI	C833		nsp	00MDD91090300	CER. CAP.	9PF 50V JA	CCUS1H9R0JA
HDMI	C834		nsp	00MDD95220300	CER. CAP.	22PF 50V JA	HCUS1H220JA
HDMI	C835		nsp	00MDK96103300	CER. CAP.	0.01UF 50V KC	HCUS1H103KC
HDMI	C902		nsp	00MDK96104300	CER. CAP.	0.1UF 25V ZF	HCUS1E104ZF
HDMI	C903		nsp	00MDK96104300	CER. CAP.	0.1UF 25V ZF	HCUS1E104ZF
HDMI	C904		nsp	00MDK96104300	CER. CAP.	0.1UF 25V ZF	HCUS1E104ZF
HDMI	C905		nsp	00MDD91100300	CER. CAP.	10PF 50V JA	CCUS1H100JA
HDMI	C906		nsp	00MDD91100300	CER. CAP.	10PF 50V JA	CCUS1H100JA
HDMI	C907		nsp	00MDK96104300	CER. CAP.	0.1UF 25V ZF	HCUS1E104ZF
HDMI	C908		nsp	00MOA47602520	ELECT CAP.	47UF 25V	CCEA1EH470T
HDMI	C909		nsp	00MDK96104300	CER. CAP.	0.1UF 25V ZF	HCUS1E104ZF
HDMI	C910		nsp	00MOA10605020	ELECT CAP.	10UF 50V	CCEA1HH100T
HDMI	C911		nsp	00MDK96104300	CER. CAP.	0.1UF 25V ZF	HCUS1E104ZF
HDMI	C912		nsp	00MDK96104300	CER. CAP.	0.1UF 25V ZF	HCUS1E104ZF
HDMI	C913		nsp	00MOA47602520	ELECT CAP.	47UF 25V	CCEA1EH470T
HDMI	C914		nsp	00MDK96104300	CER. CAP.	0.1UF 25V ZF	HCUS1E104ZF
HDMI	C915		nsp	00MDK96104300	CER. CAP.	0.1UF 25V ZF	HCUS1E104ZF
HDMI	C916		nsp	00MOA47602520	ELECT CAP.	47UF 25V	CCEA1EH470T
HDMI	C917		nsp	00MDK96104300	CER. CAP.	0.1UF 25V ZF	HCUS1E104ZF
HDMI	C918		nsp	00MDK96104300	CER. CAP.	0.1UF 25V ZF	HCUS1E104ZF
HDMI	C919		nsp	00MOA47602520	ELECT CAP.	47UF 25V	CCEA1EH470T
HDMI	C920		nsp	00MDK96104300	CER. CAP.	0.1UF 25V ZF	HCUS1E104ZF
HDMI	C921		nsp	00MDK96104300	CER. CAP.	0.1UF 25V ZF	HCUS1E104ZF
HDMI	C922		nsp	00MOA47602520	ELECT CAP.	47UF 25V	CCEA1EH470T
HDMI	C923		nsp	00MDK96104300	CER. CAP.	0.1UF 25V ZF	HCUS1E104ZF
HDMI	C924		nsp	00MDK96104300	CER. CAP.	0.1UF 25V ZF	HCUS1E104ZF
HDMI	C925		nsp	00MOA47602520	ELECT CAP.	47UF 25V	CCEA1EH470T
HDMI	C926		nsp	00MDK96104300	CER. CAP.	0.1UF 25V ZF	HCUS1E104ZF
HDMI	C927		nsp	00MDK96104300	CER. CAP.	0.1UF 25V ZF	HCUS1E104ZF
HDMI	C928		nsp	00MOA47602520	ELECT CAP.	47UF 25V	CCEA1EH470T
HDMI	C929		nsp	00MDK96104300	CER. CAP.	0.1UF 25V ZF	HCUS1E104ZF
HDMI	C930		nsp	00MDK96104300	CER. CAP.	0.1UF 25V ZF	HCUS1E104ZF
HDMI	C931		nsp	00MOA47602520	ELECT CAP.	47UF 25V	CCEA1EH470T
HDMI	C932		nsp	00MDK96104300	CER. CAP.	0.1UF 25V ZF	HCUS1E104ZF
HDMI	C933		nsp	00MDK96104300	CER. CAP.	0.1UF 25V ZF	HCUS1E104ZF
HDMI	C934		nsp	00MOA47602520	ELECT CAP.	47UF 25V	CCEA1EH470T
HDMI	C935		nsp	00MEJ10605010	ELECT CAP.	10UF 35V	CCEA1VKS100T
HDMI	C936		nsp	00MDK96104300	CER. CAP.	0.1UF 25V ZF	HCUS1E104ZF
HDMI	C937		nsp	00MDK96104300	CER. CAP.	0.1UF 25V ZF	HCUS1E104ZF
HDMI	C938		nsp	00MEJ47601640	ELECT CAP.	47 UF 16V KS	CCEA1CKS470T
HDMI	C939		nsp	00MDK96104300	CER. CAP.	0.1UF 25V ZF	HCUS1E104ZF
HDMI	C940		nsp	00MOA10701620	ELECT CAP.	100UF 16V	CCEA1CH101T
HDMI	C941		nsp	00MDK96104300	CER. CAP.	0.1UF 25V ZF	HCUS1E104ZF
HDMI	C942		nsp	00MDK96104300	CER. CAP.	0.1UF 25V ZF	HCUS1E104ZF
HDMI	C943		nsp	00MOA10701620	ELECT CAP.	100UF 16V	CCEA1CH101T

NOTE : "nsp" PART IS LISTED FOR REFERENCE ONLY, MARANTZ WILL NOT SUPPLY THESE PARTS.

P.W.B. NAME	POS. NO.	VERS. COLOR	PART NO. (FOR EUR)	PART NO. (MZ)	PART NAME	DESCRIPTION	
HDMI	C944		nsp	00MDK96104300	CER. CAP.	0.1UF 25V ZF	HCUS1E104ZF
HDMI	C945		nsp	00MDK96104300	CER. CAP.	0.1UF 25V ZF	HCUS1E104ZF
HDMI	C946		nsp	00MOA10701620	ELECT CAP.	100UF 16V	CCEA1CH101T
HDMI	C947		nsp	00MDK96104300	CER. CAP.	0.1UF 25V ZF	HCUS1E104ZF
HDMI	C948		nsp	00MDK96104300	CER. CAP.	0.1UF 25V ZF	HCUS1E104ZF
HDMI	C949		nsp	00MOA10701620	ELECT CAP.	100UF 16V	CCEA1CH101T
HDMI	C950		nsp	00MDK96104300	CER. CAP.	0.1UF 25V ZF	HCUS1E104ZF
HDMI	C951		nsp	00MDK96104300	CER. CAP.	0.1UF 25V ZF	CCUS1E104ZF
HDMI	C952		90M-EA000930R	90M-EA000930R	ELECT CAP.	3300UF 16V	CCEA1CH332E
HDMI	C953		nsp	00MDD95101300	CER. CAP.	100PF 50V JA	CCUS1H101JA
HDMI	C954		nsp	00MDD95101300	CER. CAP.	100PF 50V JA	CCUS1H101JA
HDMI	CN31		nsp	nsp	CONN.	25P FPC WAFER	CJP25GA193ZY
HDMI	CN61		nsp	nsp	CONN.	17P FPC WAFER	CJP17GA193ZY
HDMI	CN62		nsp	nsp	CONN.	11P FPC WAFER	CJP11GA193ZY
HDMI	CN63		nsp	nsp	CONN.	00906-0027 4P STRAIGHT	CJP04GA19ZY
HDMI	D133		00MHZ20039050	00MHZ20039050	DIODE	1SS378	CVD1SS378
HDMI	D134		00MHZ20039050	00MHZ20039050	DIODE	1SS378	CVD1SS378
HDMI	D135		00MHZ20039050	00MHZ20039050	DIODE	1SS378	CVD1SS378
HDMI	D136		00MHZ20039050	00MHZ20039050	DIODE	1SS378	CVD1SS378
HDMI	D137		00MHZ20039050	00MHZ20039050	DIODE	1SS378	CVD1SS378
HDMI	D138		00MHZ20039050	00MHZ20039050	DIODE	1SS378	CVD1SS378
HDMI	IC11		90M-HC109780R	90M-HC109780R	IC	AT24C02NSU EEPROM(2K)	CVIAT24C02NSU18
HDMI	IC12		90M-HC400080R	90M-HC400080R	IC	TC7MZ4052FK 4CH MUX	CVITC7MZ4052FK
HDMI	IC13		90M-HC109780R	90M-HC109780R	IC	AT24C02NSU EEPROM(2K)	CVIAT24C02NSU18
HDMI	IC14		90M-HC400080R	90M-HC400080R	IC	TC7MZ4052FK 4CH MUX	CVITC7MZ4052FK
HDMI	IC15		90M-HC109780R	90M-HC109780R	IC	AT24C02NSU EEPROM(2K)	CVIAT24C02NSU18
HDMI	IC16		90M-HC400080R	90M-HC400080R	IC	TC7MZ4052FK 4CH MUX	CVITC7MZ4052FK
HDMI	IC17		90M-HC109780R	90M-HC109780R	IC	AT24C02NSU EEPROM(2K)	CVIAT24C02NSU18
HDMI	IC18		90M-HC400080R	90M-HC400080R	IC	TC7MZ4052FK 4CH MUX	CVITC7MZ4052FK
HDMI	IC19		90M-HC109870R	90M-HC109870R	IC	CXB1441R	CVICXB1441R
HDMI	IC20		90M-HC400080R	90M-HC400080R	IC	TC7MZ4052FK 4CH MUX	CVITC7MZ4052FK
HDMI	IC21		90M-HC108910R	90M-HC108910R	IC	74VHC08	HVI74VHC08TTR
HDMI	IC22		90M-HC109870R	90M-HC109870R	IC	CXB1441R	CVICXB1441R
HDMI	IC23		90M-HC400080R	90M-HC400080R	IC	TC7MZ4052FK 4CH MUX	CVITC7MZ4052FK
HDMI	IC31		90M-HC700660R	90M-HC700660R	IC	KIC7SZ08FU	HVIKIC7SZ08FU
HDMI	IC32		90M-HC700660R	90M-HC700660R	IC	KIC7SZ08FU	HVIKIC7SZ08FU
HDMI	IC35		00D2623654006	00D2623654006	IC	SII9033CTU	CVI00D2623654006
HDMI	IC36		90M-HC700640R	90M-HC700640R	IC	TC74VCX157FT	CVITC74VCX157FT
HDMI	IC38		90M-HC700640R	90M-HC700640R	IC	TC74VCX157FT	CVITC74VCX157FT
HDMI	IC39		00MHC009105K0	00MHC009105K0	IC	TC7WH157FU	HVITC7WH157FU
HDMI	IC40		90M-HC300830R	90M-HC300830R	IC	RN5RZ50BA	HVIRN5RZ50BA
HDMI	IC41		00MHC10498990	00MHC10498990	IC	SII9030CTU-7 HDMI TX	CVI00MHC10498990
HDMI	IC42		90M-HC108910R	90M-HC108910R	IC	74VHC08	HVI74VHC08TTR
HDMI	IC43		90M-HC300830R	90M-HC300830R	IC	RN5RZ50BA	HVIRN5RZ50BA
HDMI	IC44		00MHC10498990	00MHC10498990	IC	SII9030CTU-7 HDMI TX	CVI00MHC10498990
HDMI	IC61		90M-HC108830R	90M-HC108830R	IC	NJM2285M	HVINJM2285MTE1
HDMI	IC62		00D2623603002	00D2623603002	IC	ADV7401BS80	CVI00D2623603002
HDMI	IC63		00MHC10019660	00MHC10019660	IC	CD0040AF	HVICD0040AF
HDMI	IC64		90M-HC108970R	90M-HC108970R	IC	HY57V161610ET-7	HVI57V161610ET7
HDMI	IC65		90M-HC700650R	90M-HC700650R	IC	TC74VCX541FT	CVITC74VCX541FT
HDMI	IC66		90M-HC700650R	90M-HC700650R	IC	TC74VCX541FT	CVITC74VCX541FT
HDMI	IC67		90M-HC700650R	90M-HC700650R	IC	TC74VCX541FT	CVITC74VCX541FT
HDMI	IC68		90M-HC700650R	90M-HC700650R	IC	TC74VCX541FT	CVITC74VCX541FT
HDMI	IC69		90M-HC700650R	90M-HC700650R	IC	TC74VCX541FT	CVITC74VCX541FT
HDMI	IC70		90M-HC700650R	90M-HC700650R	IC	TC74VCX541FT	CVITC74VCX541FT
HDMI	IC71		00D2623478004	00D2623478004	IC	ADV7320KSTZ	CVI00D2623478004
HDMI	IC89		90M-HC108910R	90M-HC108910R	IC	74VHC08	HVI74VHC08TTR
HDMI	IC90		90M-HS05CW20R	90M-HS05CW20R	U-PRO	HD64F36087HV SR8001	CVIHD64F36087HV
HDMI	IC91		00D2631213905	00D2631213905	IC	KIA7808AF	CVIKIA7808AF
HDMI	IC92		90M-HC300940R	90M-HC300940R	IC	LM1117-ADJ	HVILM1117S-ADJ
HDMI	IC93		90M-HC300940R	90M-HC300940R	IC	LM1117-ADJ	HVILM1117S-ADJ
HDMI	IC94		90M-HC300940R	90M-HC300940R	IC	LM1117-ADJ	HVILM1117S-ADJ
HDMI	IC95		90M-HC300940R	90M-HC300940R	IC	LM1117-ADJ	HVILM1117S-ADJ
HDMI	IC96		90M-HC300940R	90M-HC300940R	IC	LM1117-ADJ	HVILM1117S-ADJ
HDMI	IC97		90M-HC300940R	90M-HC300940R	IC	LM1117-ADJ	HVILM1117S-ADJ
HDMI	IC98		90M-HC300940R	90M-HC300940R	IC	LM1117-ADJ	HVILM1117S-ADJ
HDMI	IC99		90M-HC300940R	90M-HC300940R	IC	LM1117-ADJ	HVILM1117S-ADJ

NOTE : "nsp" PART IS LISTED FOR REFERENCE ONLY, MARANTZ WILL NOT SUPPLY THESE PARTS.

P.W.B. NAME	POS. NO.	VERS. COLOR	PART NO. (FOR EUR)	PART NO. (MZ)	PART NAME	DESCRIPTION	
HDMI	JK11		90M-YT005010R	90M-YT005010R	TERMINAL	HDMI YKF45-7009	HJJ9H003Z
HDMI	JK12		90M-YT005010R	90M-YT005010R	TERMINAL	HDMI YKF45-7009	HJJ9H003Z
HDMI	JK13		90M-YT005010R	90M-YT005010R	TERMINAL	HDMI YKF45-7009	HJJ9H003Z
HDMI	JK14		90M-YT005010R	90M-YT005010R	TERMINAL	HDMI YKF45-7009	HJJ9H003Z
HDMI	JK31		90M-YT005010R	90M-YT005010R	TERMINAL	HDMI YKF45-7009	HJJ9H003Z
HDMI	JK32		90M-YT005010R	90M-YT005010R	TERMINAL	HDMI YKF45-7009	HJJ9H003Z
HDMI	L101		90M-LU000260R	90M-LU000260R	CHIP INDUCT	10UH	CLQ10E100MRZ
HDMI	L102		90M-LU000260R	90M-LU000260R	CHIP INDUCT	10UH	CLQ10E100MRZ
HDMI	L301		90M-LU000260R	90M-LU000260R	CHIP INDUCT	10UH	CLQ10E100MRZ
HDMI	L302		90M-LU000260R	90M-LU000260R	CHIP INDUCT	10UH	CLQ10E100MRZ
HDMI	L303		90M-LU000260R	90M-LU000260R	CHIP INDUCT	10UH	CLQ10E100MRZ
HDMI	L304		90M-LU000260R	90M-LU000260R	CHIP INDUCT	10UH	CLQ10E100MRZ
HDMI	L305		90M-LU000260R	90M-LU000260R	CHIP INDUCT	10UH	CLQ10E100MRZ
HDMI	L306		90M-LU000260R	90M-LU000260R	CHIP INDUCT	10UH	CLQ10E100MRZ
HDMI	L601		90M-FC900400R	90M-FC900400R	FERRITE CORE	BEAD CHIP 60(1608 SIZE)	HLZ9R005Z
HDMI	L602		90M-FC900400R	90M-FC900400R	FERRITE CORE	BEAD CHIP 60(1608 SIZE)	HLZ9R005Z
HDMI	L603		90M-FC900400R	90M-FC900400R	FERRITE CORE	BEAD CHIP 60(1608 SIZE)	HLZ9R005Z
HDMI	L604		90M-FC900400R	90M-FC900400R	FERRITE CORE	BEAD CHIP 60(1608 SIZE)	HLZ9R005Z
HDMI	L605		90M-LU000260R	90M-LU000260R	CHIP INDUCT	10UH	CLQ10E100MRZ
HDMI	L606		90M-FC900400R	90M-FC900400R	FERRITE CORE	BEAD CHIP 60(1608 SIZE)	HLZ9R005Z
HDMI	L801		nsp	nsp	COIL	22UH,K	HLQ02C220KT
HDMI	L802		nsp	nsp	COIL	22UH,K	HLQ02C220KT
HDMI	L803		nsp	nsp	COIL	22UH,K	HLQ02C220KT
HDMI	L804		nsp	nsp	COIL	22UH,K	HLQ02C220KT
HDMI	L805		nsp	nsp	COIL	22UH,K	HLQ02C220KT
HDMI	L806		nsp	nsp	COIL	22UH,K	HLQ02C220KT
HDMI	L901		90M-LU000260R	90M-LU000260R	CHIP INDUCT	10UH	CLQ10E100MRZ
HDMI	L902		90M-LU000260R	90M-LU000260R	CHIP INDUCT	10UH	CLQ10E100MRZ
HDMI	L903		90M-LU000260R	90M-LU000260R	CHIP INDUCT	10UH	CLQ10E100MRZ
HDMI	L904		90M-LU000260R	90M-LU000260R	CHIP INDUCT	10UH	CLQ10E100MRZ
HDMI	Q101		90M-HX600010R	90M-HX600010R	CHIP TRS.	KRA102S	HVTKRA102S
HDMI	Q102		90M-BA001620R	90M-BA001620R	CHIP TRS.	KRC103S	CVTKRC103S
HDMI	Q103		90M-HY200050R	90M-HY200050R	F.E.T.	UPA672T	CVTUPA672T
HDMI	Q104		90M-BA001620R	90M-BA001620R	CHIP TRS.	KRC103S	CVTKRC103S
HDMI	Q105		90M-HX600010R	90M-HX600010R	CHIP TRS.	KRA102S	HVTKRA102S
HDMI	Q106		90M-BA001620R	90M-BA001620R	CHIP TRS.	KRC103S	CVTKRC103S
HDMI	Q107		90M-HY200050R	90M-HY200050R	F.E.T.	UPA672T	CVTUPA672T
HDMI	Q108		90M-BA001620R	90M-BA001620R	CHIP TRS.	KRC103S	CVTKRC103S
HDMI	Q109		90M-HX600010R	90M-HX600010R	CHIP TRS.	KRA102S	HVTKRA102S
HDMI	Q110		90M-BA001620R	90M-BA001620R	CHIP TRS.	KRC103S	CVTKRC103S
HDMI	Q111		90M-HY200050R	90M-HY200050R	F.E.T.	UPA672T	CVTUPA672T
HDMI	Q112		90M-BA001620R	90M-BA001620R	CHIP TRS.	KRC103S	CVTKRC103S
HDMI	Q113		90M-HX600010R	90M-HX600010R	CHIP TRS.	KRA102S	HVTKRA102S
HDMI	Q114		90M-BA001620R	90M-BA001620R	CHIP TRS.	KRC103S	CVTKRC103S
HDMI	Q115		90M-HY200050R	90M-HY200050R	F.E.T.	UPA672T	CVTUPA672T
HDMI	Q116		90M-BA001620R	90M-BA001620R	CHIP TRS.	KRC103S	CVTKRC103S
HDMI	Q117		90M-BA001620R	90M-BA001620R	CHIP TRS.	KRC103S	CVTKRC103S
HDMI	Q118		90M-BA001620R	90M-BA001620R	CHIP TRS.	KRC103S	CVTKRC103S
HDMI	Q301		90M-HY200050R	90M-HY200050R	F.E.T.	UPA672T	CVTUPA672T
HDMI	Q302		90M-BA001620R	90M-BA001620R	CHIP TRS.	KRC103S	CVTKRC103S
HDMI	Q303		90M-HY200050R	90M-HY200050R	F.E.T.	UPA672T	CVTUPA672T
HDMI	Q601		90M-HT600050R	90M-HT600050R	TRS.	KTA2014GR	HVTKTA2014GR
HDMI	Q602		90M-HT600050R	90M-HT600050R	TRS.	KTA2014GR	HVTKTA2014GR
HDMI	Q603		90M-HT600050R	90M-HT600050R	TRS.	KTA2014GR	HVTKTA2014GR
HDMI	Q604		90M-HX800010R	90M-HX800010R	CHIP TRS.	KRC102S	HVTKRC102S
HDMI	Q605		90M-HX800010R	90M-HX800010R	CHIP TRS.	KRC102S	HVTKRC102S
HDMI	Q606		90M-HX800010R	90M-HX800010R	CHIP TRS.	KRC102S	HVTKRC102S
HDMI	Q801		90M-HT800110R	90M-HT800110R	TRS.	KTC4075GR	HVTKTC4075GR
HDMI	Q802		90M-HT600050R	90M-HT600050R	TRS.	KTA2014GR	HVTKTA2014GR
HDMI	Q803		90M-HT800110R	90M-HT800110R	TRS.	KTC4075GR	HVTKTC4075GR
HDMI	Q804		90M-HT600050R	90M-HT600050R	TRS.	KTA2014GR	HVTKTA2014GR
HDMI	Q805		90M-HT800110R	90M-HT800110R	TRS.	KTC4075GR	HVTKTC4075GR
HDMI	Q806		90M-HT600050R	90M-HT600050R	TRS.	KTA2014GR	HVTKTA2014GR
HDMI	Q807		90M-HT800110R	90M-HT800110R	TRS.	KTC4075GR	HVTKTC4075GR
HDMI	Q808		90M-HT600050R	90M-HT600050R	TRS.	KTA2014GR	HVTKTA2014GR
HDMI	Q809		90M-HT800110R	90M-HT800110R	TRS.	KTC4075GR	HVTKTC4075GR
HDMI	Q810		90M-HT600050R	90M-HT600050R	TRS.	KTA2014GR	HVTKTA2014GR

NOTE : "nsp" PART IS LISTED FOR REFERENCE ONLY, MARANTZ WILL NOT SUPPLY THESE PARTS.

P.W.B. NAME	POS. NO.	VERS. COLOR	PART NO. (FOR EUR)	PART NO. (MZ)	PART NAME	DESCRIPTION	
HDMI	Q811		90M-HT800110R	90M-HT800110R	TRS.	KTC4075GR	HVTKTC4075GR
HDMI	Q812		90M-HT600050R	90M-HT600050R	TRS.	KTA2014GR	HVTKTA2014GR
HDMI	Q813		90M-HT800110R	90M-HT800110R	TRS.	KTC4075GR	HVTKTC4075GR
HDMI	Q814		90M-HT600050R	90M-HT600050R	TRS.	KTA2014GR	HVTKTA2014GR
HDMI	Q815		90M-HT800110R	90M-HT800110R	TRS.	KTC4075GR	HVTKTC4075GR
HDMI	Q816		90M-HT800110R	90M-HT800110R	TRS.	KTC4075GR	HVTKTC4075GR
HDMI	Q817		90M-HT600050R	90M-HT600050R	TRS.	KTA2014GR	HVTKTA2014GR
HDMI	Q818		90M-HT800110R	90M-HT800110R	TRS.	KTC4075GR	HVTKTC4075GR
HDMI	Q819		90M-HT600050R	90M-HT600050R	TRS.	KTA2014GR	HVTKTA2014GR
HDMI	Q901		90M-HY200050R	90M-HY200050R	F.E.T.	UPA672T	CVTUPA672T
HDMI	R101		nsp	00MNN05102610	CHIP RES.	1K OHM 1/10W J	CRJ10DJ102T
HDMI	R102		nsp	00MNN05223610	CHIP RES.	22K OHM 1/10W J	CRJ10DJ223T
HDMI	R103		nsp	00MNN05101610	CHIP RES.	100 OHM 1/10W J	CRJ10DJ101T
HDMI	R104		nsp	00MNN05101610	CHIP RES.	100 OHM 1/10W J	CRJ10DJ101T
HDMI	R105		nsp	00MNN05103610	CHIP RES.	10K OHM 1/10W J	CRJ10DJ103T
HDMI	R106		nsp	00MNN05473610	CHIP RES.	47K OHM 1/10W J	CRJ10DJ473T
HDMI	R107		nsp	00MNN05473610	CHIP RES.	47K OHM 1/10W J	CRJ10DJ473T
HDMI	R108		nsp	00MNN05103610	CHIP RES.	10K OHM 1/10W J	CRJ10DJ103T
HDMI	R109		nsp	00MNN05103610	CHIP RES.	10K OHM 1/10W J	CRJ10DJ103T
HDMI	R110		nsp	00MNN05102610	CHIP RES.	1K OHM 1/10W J	CRJ10DJ102T
HDMI	R111		nsp	00MNN05223610	CHIP RES.	22K OHM 1/10W J	CRJ10DJ223T
HDMI	R112		nsp	00MNN05101610	CHIP RES.	100 OHM 1/10W J	CRJ10DJ101T
HDMI	R113		nsp	00MNN05101610	CHIP RES.	100 OHM 1/10W J	CRJ10DJ101T
HDMI	R114		nsp	00MNN05103610	CHIP RES.	10K OHM 1/10W J	CRJ10DJ103T
HDMI	R115		nsp	00MNN05473610	CHIP RES.	47K OHM 1/10W J	CRJ10DJ473T
HDMI	R116		nsp	00MNN05473610	CHIP RES.	47K OHM 1/10W J	CRJ10DJ473T
HDMI	R117		nsp	00MNN05103610	CHIP RES.	10K OHM 1/10W J	CRJ10DJ103T
HDMI	R118		nsp	00MNN05103610	CHIP RES.	10K OHM 1/10W J	CRJ10DJ103T
HDMI	R119		nsp	00MNN05102610	CHIP RES.	1K OHM 1/10W J	CRJ10DJ102T
HDMI	R120		nsp	00MNN05223610	CHIP RES.	22K OHM 1/10W J	CRJ10DJ223T
HDMI	R121		nsp	00MNN05101610	CHIP RES.	100 OHM 1/10W J	CRJ10DJ101T
HDMI	R122		nsp	00MNN05101610	CHIP RES.	100 OHM 1/10W J	CRJ10DJ101T
HDMI	R123		nsp	00MNN05103610	CHIP RES.	10K OHM 1/10W J	CRJ10DJ103T
HDMI	R124		nsp	00MNN05473610	CHIP RES.	47K OHM 1/10W J	CRJ10DJ473T
HDMI	R125		nsp	00MNN05473610	CHIP RES.	47K OHM 1/10W J	CRJ10DJ473T
HDMI	R126		nsp	00MNN05103610	CHIP RES.	10K OHM 1/10W J	CRJ10DJ103T
HDMI	R127		nsp	00MNN05103610	CHIP RES.	10K OHM 1/10W J	CRJ10DJ103T
HDMI	R128		nsp	00MNN05102610	CHIP RES.	1K OHM 1/10W J	CRJ10DJ102T
HDMI	R129		nsp	00MNN05223610	CHIP RES.	22K OHM 1/10W J	CRJ10DJ223T
HDMI	R130		nsp	00MNN05101610	CHIP RES.	100 OHM 1/10W J	CRJ10DJ101T
HDMI	R131		nsp	00MNN05101610	CHIP RES.	100 OHM 1/10W J	CRJ10DJ101T
HDMI	R132		nsp	00MNN05103610	CHIP RES.	10K OHM 1/10W J	CRJ10DJ103T
HDMI	R133		nsp	00MNN05473610	CHIP RES.	47K OHM 1/10W J	CRJ10DJ473T
HDMI	R134		nsp	00MNN05473610	CHIP RES.	47K OHM 1/10W J	CRJ10DJ473T
HDMI	R135		nsp	00MNN05103610	CHIP RES.	10K OHM 1/10W J	CRJ10DJ103T
HDMI	R136		nsp	00MNN05103610	CHIP RES.	10K OHM 1/10W J	CRJ10DJ103T
HDMI	R137		nsp	00MNN05472610	CHIP RES.	4.7K OHM 1/10W J	CRJ10DJ472T
HDMI	R138		nsp	00MNN05473610	CHIP RES.	47K OHM 1/10W J	CRJ10DJ473T
HDMI	R139		nsp	00MNN05101610	CHIP RES.	100 OHM 1/10W J	CRJ10DJ101T
HDMI	R140		nsp	00MNN05473610	CHIP RES.	47K OHM 1/10W J	CRJ10DJ473T
HDMI	R141		nsp	00MNN05101610	CHIP RES.	100 OHM 1/10W J	CRJ10DJ101T
HDMI	R142		nsp	00MNN05473610	CHIP RES.	47K OHM 1/10W J	CRJ10DJ473T
HDMI	R143		nsp	00MNN05332610	CHIP RES.	3.3K OHM 1/10W J	CRJ10DJ332T
HDMI	R144		nsp	00MNN05682610	CHIP RES.	6.8K OHM 1/10W J	CRJ10DJ682T
HDMI	R145		nsp	00MNN05472610	CHIP RES.	4.7K OHM 1/10W J	CRJ10DJ472T
HDMI	R146		nsp	00MNN05473610	CHIP RES.	47K OHM 1/10W J	CRJ10DJ473T
HDMI	R147		nsp	00MNN05101610	CHIP RES.	100 OHM 1/10W J	CRJ10DJ101T
HDMI	R148		nsp	00MNN05473610	CHIP RES.	47K OHM 1/10W J	CRJ10DJ473T
HDMI	R149		nsp	00MNN05101610	CHIP RES.	100 OHM 1/10W J	CRJ10DJ101T
HDMI	R150		nsp	00MNN05473610	CHIP RES.	47K OHM 1/10W J	CRJ10DJ473T
HDMI	R151		nsp	00MNN05332610	CHIP RES.	3.3K OHM 1/10W J	CRJ10DJ332T
HDMI	R152		nsp	00MNN05682610	CHIP RES.	6.8K OHM 1/10W J	CRJ10DJ682T
HDMI	R153		nsp	00MNN05103610	CHIP RES.	10K OHM 1/10W J	CRJ10DJ103T
HDMI	R154		nsp	00MNN05103610	CHIP RES.	10K OHM 1/10W J	CRJ10DJ103T
HDMI	R301		nsp	00MNN05101610	CHIP RES.	100 OHM 1/10W J	CRJ10DJ101T
HDMI	R302		nsp	00MNN05101610	CHIP RES.	100 OHM 1/10W J	CRJ10DJ101T
HDMI	R303		nsp	00MNN05101610	CHIP RES.	100 OHM 1/10W J	CRJ10DJ101T

NOTE : "nsp" PART IS LISTED FOR REFERENCE ONLY, MARANTZ WILL NOT SUPPLY THESE PARTS.

P.W.B. NAME	POS. NO.	VERS. COLOR	PART NO. (FOR EUR)	PART NO. (MZ)	PART NAME	DESCRIPTION	
HDMI	R304		nsp	00MNN05101610	CHIP RES.	100 OHM 1/10W J	CRJ10DJ101T
HDMI	R305		nsp	00MNN05101610	CHIP RES.	100 OHM 1/10W J	CRJ10DJ101T
HDMI	R306		nsp	00MNN05101610	CHIP RES.	100 OHM 1/10W J	CRJ10DJ101T
HDMI	R307		nsp	00MNN05220610	CHIP RES.	22 OHM 1/10W J	CRJ10DJ220T
HDMI	R308		nsp	00MNN05330610	CHIP RES.	33 OHM 1/10W J	CRJ10DJ330T
HDMI	R309		nsp	00MNN05105610	CHIP RES.	1M OHM 1/10W J	CRJ10DJ105T
HDMI	R310		nsp	00MNN05103610	CHIP RES.	10K OHM 1/10W J	CRJ10DJ103T
HDMI	R311		nsp	00MNN05103610	CHIP RES.	10K OHM 1/10W J	CRJ10DJ103T
HDMI	R313		nsp	00MNN05101610	CHIP RES.	100 OHM 1/10W J	CRJ10DJ101T
HDMI	R314		nsp	00MNN05101610	CHIP RES.	100 OHM 1/10W J	CRJ10DJ101T
HDMI	R315		nsp	00MNN05101610	CHIP RES.	100 OHM 1/10W J	CRJ10DJ101T
HDMI	R316		nsp	00MNN05101610	CHIP RES.	100 OHM 1/10W J	CRJ10DJ101T
HDMI	R319		nsp	00MNN05101610	CHIP RES.	100 OHM 1/10W J	CRJ10DJ101T
HDMI	R320		nsp	00MNN05101610	CHIP RES.	100 OHM 1/10W J	CRJ10DJ101T
HDMI	R321		nsp	00MNN05101610	CHIP RES.	100 OHM 1/10W J	CRJ10DJ101T
HDMI	R322		nsp	00MNN05220610	CHIP RES.	22 OHM 1/10W J	CRJ10DJ220T
HDMI	R323		nsp	00MNN05220610	CHIP RES.	22 OHM 1/10W J	CRJ10DJ220T
HDMI	R324		nsp	00MNN05103610	CHIP RES.	10K OHM 1/10W J	CRJ10DJ103T
HDMI	R325		nsp	00MNN05103610	CHIP RES.	10K OHM 1/10W J	CRJ10DJ103T
HDMI	R326		nsp	00MNN05182610	CHIP RES.	1.8K OHM 1/10W J	CRJ10DJ182T
HDMI	R327		nsp	00MNN05182610	CHIP RES.	1.8K OHM 1/10W J	CRJ10DJ182T
HDMI	R328		nsp	00MNN05431610	CHIP RES.	430 OHM 1/10W J	CRJ10DJ431T
HDMI	R329		nsp	00MNN05242610	CHIP RES.	2.4K OHM	CRJ10DJ242T
HDMI	R330		nsp	00MNN05242610	CHIP RES.	2.4K OHM	CRJ10DJ242T
HDMI	R331		nsp	00MNN05242610	CHIP RES.	2.4K OHM	CRJ10DJ242T
HDMI	R332		nsp	00MNN05242610	CHIP RES.	2.4K OHM	CRJ10DJ242T
HDMI	R334		nsp	00MNN05103610	CHIP RES.	10K OHM 1/10W J	CRJ10DJ103T
HDMI	R335		nsp	00MNN05101610	CHIP RES.	100 OHM 1/10W J	CRJ10DJ101T
HDMI	R336		nsp	00MNN05101610	CHIP RES.	100 OHM 1/10W J	CRJ10DJ101T
HDMI	R337		nsp	00MNN05101610	CHIP RES.	100 OHM 1/10W J	CRJ10DJ101T
HDMI	R338		nsp	00MNN05000610	CHIP RES.	0 OHM 1/10W J	CRJ10DJ0R0T
HDMI	R339		nsp	00MNN05000610	CHIP RES.	0 OHM 1/10W J	CRJ10DJ0R0T
HDMI	R340		nsp	00MNN05273610	CHIP RES.	27K OHM 1/10W J	CRJ10DJ273T
HDMI	R341		nsp	00MNN05101610	CHIP RES.	100 OHM 1/10W J	CRJ10DJ101T
HDMI	R342		nsp	00MNN05101610	CHIP RES.	100 OHM 1/10W J	CRJ10DJ101T
HDMI	R343		nsp	00MNN05473610	CHIP RES.	47K OHM 1/10W J	CRJ10DJ473T
HDMI	R344		nsp	00MNN05000610	CHIP RES.	0 OHM 1/10W J	CRJ10DJ0R0T
HDMI	R345		nsp	00MNN05000610	CHIP RES.	0 OHM 1/10W J	CRJ10DJ0R0T
HDMI	R346		nsp	00MNN05222610	CHIP RES.	2.2K OHM 1/10W J	CRJ10DJ222T
HDMI	R347		nsp	00MNN05222610	CHIP RES.	2.2K OHM 1/10W J	CRJ10DJ222T
HDMI	R348		nsp	00MNN05473610	CHIP RES.	47K OHM 1/10W J	CRJ10DJ473T
HDMI	R349		nsp	00MNN05101610	CHIP RES.	100 OHM 1/10W J	CRJ10DJ101T
HDMI	R350		nsp	00MNN05103610	CHIP RES.	10K OHM 1/10W J	CRJ10DJ103T
HDMI	R351		nsp	00MNN05103610	CHIP RES.	10K OHM 1/10W J	CRJ10DJ103T
HDMI	R352		nsp	00MNN05182610	CHIP RES.	1.8K OHM 1/10W J	CRJ10DJ182T
HDMI	R353		nsp	00MNN05182610	CHIP RES.	1.8K OHM 1/10W J	CRJ10DJ182T
HDMI	R354		nsp	00MNN05431610	CHIP RES.	430 OHM 1/10W J	CRJ10DJ431T
HDMI	R355		nsp	00MNN05242610	CHIP RES.	2.4K OHM	CRJ10DJ242T
HDMI	R356		nsp	00MNN05242610	CHIP RES.	2.4K OHM	CRJ10DJ242T
HDMI	R357		nsp	00MNN05242610	CHIP RES.	2.4K OHM	CRJ10DJ242T
HDMI	R358		nsp	00MNN05242610	CHIP RES.	2.4K OHM	CRJ10DJ242T
HDMI	R359		nsp	00MNN05103610	CHIP RES.	10K OHM 1/10W J	CRJ10DJ103T
HDMI	R361		nsp	00MNN05101610	CHIP RES.	100 OHM 1/10W J	CRJ10DJ101T
HDMI	R362		nsp	00MNN05101610	CHIP RES.	100 OHM 1/10W J	CRJ10DJ101T
HDMI	R363		nsp	00MNN05101610	CHIP RES.	100 OHM 1/10W J	CRJ10DJ101T
HDMI	R364		nsp	00MNN05820610	CHIP RES.	82 OHM 1/10W J	CRJ10DJ820T
HDMI	R365		nsp	00MNN05390610	CHIP RES.	39 OHM 1/10W J	CRJ10DJ390T
HDMI	R370		nsp	00MNN05000610	CHIP RES.	0 OHM 1/10W J	CRJ10DJ0R0T
HDMI	R371		nsp	00MNN05000610	CHIP RES.	0 OHM 1/10W J	CRJ10DJ0R0T
HDMI	R372		nsp	00MNN05000610	CHIP RES.	0 OHM 1/10W J	CRJ10DJ0R0T
HDMI	R373		nsp	00MNN05000610	CHIP RES.	0 OHM 1/10W J	CRJ10DJ0R0T
HDMI	R374		nsp	00MNN05000610	CHIP RES.	0 OHM 1/10W J	CRJ10DJ0R0T
HDMI	R375		nsp	00MNN05000610	CHIP RES.	0 OHM 1/10W J	CRJ10DJ0R0T
HDMI	R376		nsp	00MNN05000610	CHIP RES.	0 OHM 1/10W J	CRJ10DJ0R0T
HDMI	R377		nsp	00MNN05000610	CHIP RES.	0 OHM 1/10W J	CRJ10DJ0R0T
HDMI	R378		nsp	00MNN05220610	CHIP RES.	22 OHM 1/10W J	CRJ10DJ220T
HDMI	R379		nsp	00MNN05101610	CHIP RES.	100 OHM 1/10W J	CRJ10DJ101T

NOTE : "nsp" PART IS LISTED FOR REFERENCE ONLY, MARANTZ WILL NOT SUPPLY THESE PARTS.

P.W.B. NAME	POS. NO.	VERS. COLOR	PART NO. (FOR EUR)	PART NO. (MZ)	PART NAME	DESCRIPTION	
HDMI	R380		nsp	00MNN05220610	CHIP RES.	22 OHM 1/10W J	CRJ10DJ220T
HDMI	R381		nsp	00MNN05220610	CHIP RES.	22 OHM 1/10W J	CRJ10DJ220T
HDMI	R382		nsp	00MNN05220610	CHIP RES.	22 OHM 1/10W J	CRJ10DJ220T
HDMI	R383		nsp	00MNN05103610	CHIP RES.	10K OHM 1/10W J	CRJ10DJ103T
HDMI	R384		nsp	00MNN05103610	CHIP RES.	10K OHM 1/10W J	CRJ10DJ103T
HDMI	R601		nsp	00MNN05105610	CHIP RES.	1M OHM 1/10W J	CRJ10DJ105T
HDMI	R602		nsp	00MNN05105610	CHIP RES.	1M OHM 1/10W J	CRJ10DJ105T
HDMI	R603		nsp	00MNN05105610	CHIP RES.	1M OHM 1/10W J	CRJ10DJ105T
HDMI	R604		nsp	00MNN05105610	CHIP RES.	1M OHM 1/10W J	CRJ10DJ105T
HDMI	R605		nsp	00MNN05102610	CHIP RES.	1K OHM 1/10W J	CRJ10DJ102T
HDMI	R606		nsp	00MNN05102610	CHIP RES.	1K OHM 1/10W J	CRJ10DJ102T
HDMI	R607		nsp	00MNN05102610	CHIP RES.	1K OHM 1/10W J	CRJ10DJ102T
HDMI	R608		nsp	00MNN05102610	CHIP RES.	1K OHM 1/10W J	CRJ10DJ102T
HDMI	R609		nsp	00MNN05821610	CHIP RES.	820 OHM 1/10W J	CRJ10DJ821T
HDMI	R610		nsp	00MNN05152610	CHIP RES.	1.5K OHM 1/10W J	CRJ10DJ152T
HDMI	R611		nsp	00MNN05750610	CHIP RES.	75 OHM 1/10W J	CRJ10DJ750T
HDMI	R612		nsp	00MNN05750610	CHIP RES.	75 OHM 1/10W J	CRJ10DJ750T
HDMI	R613		nsp	00MNN05750610	CHIP RES.	75 OHM 1/10W J	CRJ10DJ750T
HDMI	R614		nsp	00MNN05103610	CHIP RES.	10K OHM 1/10W J	CRJ10DJ103T
HDMI	R615		nsp	00MNN05562610	CHIP RES.	5.6K OHM 1/10W J	CRJ10DJ562T
HDMI	R617		nsp	00MNN05101610	CHIP RES.	100 OHM 1/10W J	CRJ10DJ101T
HDMI	R618		nsp	00MNN05101610	CHIP RES.	100 OHM 1/10W J	CRJ10DJ101T
HDMI	R619		nsp	00MNN05220610	CHIP RES.	22 OHM 1/10W J	CRJ10DJ220T
HDMI	R620		nsp	00MNN05220610	CHIP RES.	22 OHM 1/10W J	CRJ10DJ220T
HDMI	R621		nsp	00MNN05000610	CHIP RES.	0 OHM 1/10W J	CRJ10DJ0R0T
HDMI	R622		nsp	00MNN05220610	CHIP RES.	22 OHM 1/10W J	CRJ10DJ220T
HDMI	R625		nsp	00MNN05220610	CHIP RES.	22 OHM 1/10W J	CRJ10DJ220T
HDMI	R626		nsp	00MNN05220610	CHIP RES.	22 OHM 1/10W J	CRJ10DJ220T
HDMI	R627		nsp	00MNN05220610	CHIP RES.	22 OHM 1/10W J	CRJ10DJ220T
HDMI	R628		nsp	00MNN05220610	CHIP RES.	22 OHM 1/10W J	CRJ10DJ220T
HDMI	R629		nsp	00MNN05220610	CHIP RES.	22 OHM 1/10W J	CRJ10DJ220T
HDMI	R630		nsp	00MNN05105610	CHIP RES.	1M OHM 1/10W J	CRJ10DJ105T
HDMI	R631		nsp	00MNN05220610	CHIP RES.	22 OHM 1/10W J	CRJ10DJ220T
HDMI	R632		nsp	00MNN05220610	CHIP RES.	22 OHM 1/10W J	CRJ10DJ220T
HDMI	R633		nsp	00MNN05273610	CHIP RES.	27K OHM 1/10W J	CRJ10DJ273T
HDMI	R634		nsp	00MNN05182610	CHIP RES.	1.8K OHM 1/10W J	CRJ10DJ182T
HDMI	R635		nsp	00MNN05000610	CHIP RES.	0 OHM 1/10W J	CRJ10DJ0R0T
HDMI	R637		nsp	00MNN05272610	CHIP RES.	2.7K OHM 1/10W J	CRJ10DJ272T
HDMI	R638		nsp	00MNN05272610	CHIP RES.	2.7K OHM 1/10W J	CRJ10DJ272T
HDMI	R639		nsp	00MNN05000610	CHIP RES.	0 OHM 1/10W J	CRJ10DJ0R0T
HDMI	R642		nsp	00MNN05000610	CHIP RES.	0 OHM 1/10W J	CRJ10DJ0R0T
HDMI	R643		nsp	00MNN05000610	CHIP RES.	0 OHM 1/10W J	CRJ10DJ0R0T
HDMI	R644		nsp	00MNN05220610	CHIP RES.	22 OHM 1/10W J	CRJ10DJ220T
HDMI	R645		nsp	00MNN05220610	CHIP RES.	22 OHM 1/10W J	CRJ10DJ220T
HDMI	R646		nsp	00MNN05220610	CHIP RES.	22 OHM 1/10W J	CRJ10DJ220T
HDMI	R647		nsp	00MNN05220610	CHIP RES.	22 OHM 1/10W J	CRJ10DJ220T
HDMI	R650		nsp	00MNN05220610	CHIP RES.	22 OHM 1/10W J	CRJ10DJ220T
HDMI	R651		nsp	00MNN05220610	CHIP RES.	22 OHM 1/10W J	CRJ10DJ220T
HDMI	R652		nsp	00MNN05101610	CHIP RES.	100 OHM 1/10W J	CRJ10DJ101T
HDMI	R653		nsp	00MNN05101610	CHIP RES.	100 OHM 1/10W J	CRJ10DJ101T
HDMI	R655		nsp	00MNN05103610	CHIP RES.	10K OHM 1/10W J	CRJ10DJ103T
HDMI	R656		nsp	00MNN05101610	CHIP RES.	100 OHM 1/10W J	CRJ10DJ101T
HDMI	R657		nsp	00MNN05103610	CHIP RES.	10K OHM 1/10W J	CRJ10DJ103T
HDMI	R658		nsp	00MNN05101610	CHIP RES.	100 OHM 1/10W J	CRJ10DJ101T
HDMI	R659		nsp	00MNN05000610	CHIP RES.	0 OHM 1/10W J	CRJ10DJ0R0T
HDMI	R661		nsp	00MNN05101610	CHIP RES.	100 OHM 1/10W J	CRJ10DJ101T
HDMI	R662		nsp	00MNN05101610	CHIP RES.	100 OHM 1/10W J	CRJ10DJ101T
HDMI	R663		nsp	00MNN05103610	CHIP RES.	10K OHM 1/10W J	CRJ10DJ103T
HDMI	R664		nsp	00MNN05101610	CHIP RES.	100 OHM 1/10W J	CRJ10DJ101T
HDMI	R665		nsp	00MNN05681610	CHIP RES.	680 OHM 1/10W J	CRJ10DJ681T
HDMI	R666		nsp	00MNN05391610	CHIP RES.	390 OHM 1/10W J	CRJ10DJ391T
HDMI	R667		nsp	00MNN05272610	CHIP RES.	2.7K OHM 1/10W J	CRJ10DJ272T
HDMI	R668		nsp	90M-NN000850R	CHIP RES.	6.8K OHM 1608 1%	CRJ10DF6801T
HDMI	R669		nsp	90M-NN000850R	CHIP RES.	6.8K OHM 1608 1%	CRJ10DF6801T
HDMI	R670		nsp	00MNN05391610	CHIP RES.	390 OHM 1/10W J	CRJ10DJ391T
HDMI	R671		nsp	00MNN05272610	CHIP RES.	2.7K OHM 1/10W J	CRJ10DJ272T
HDMI	R672		nsp	90M-NN000860R	CHIP RES.	300 OHM 1/10W J	CRJ10DJ301T

NOTE : "nsp" PART IS LISTED FOR REFERENCE ONLY, MARANTZ WILL NOT SUPPLY THESE PARTS.

P.W.B. NAME	POS. NO.	VERS. COLOR	PART NO. (FOR EUR)	PART NO. (MZ)	PART NAME	DESCRIPTION	
HDMI	R673		nsp	90M-NN000860R	CHIP RES.	300 OHM 1/10W J	CRJ10DJ301T
HDMI	R674		nsp	90M-NN000860R	CHIP RES.	300 OHM 1/10W J	CRJ10DJ301T
HDMI	R675		nsp	90M-NN000860R	CHIP RES.	300 OHM 1/10W J	CRJ10DJ301T
HDMI	R676		nsp	90M-NN000860R	CHIP RES.	300 OHM 1/10W J	CRJ10DJ301T
HDMI	R677		nsp	90M-NN000860R	CHIP RES.	300 OHM 1/10W J	CRJ10DJ301T
HDMI	R680		nsp	00MNN05000610	CHIP RES.	0 OHM 1/10W J	CRJ10DJ0R0T
HDMI	R681		nsp	00MNN05000610	CHIP RES.	0 OHM 1/10W J	CRJ10DJ0R0T
HDMI	R684		nsp	00MNN05000610	CHIP RES.	0 OHM 1/10W J	CRJ10DJ0R0T
HDMI	R686		nsp	00MNN05473610	CHIP RES.	47K OHM 1/10W J	CRJ10DJ473T
HDMI	R687		nsp	00MNN05220610	CHIP RES.	22 OHM 1/10W J	CRJ10DJ220T
HDMI	R688		nsp	00MNN05220610	CHIP RES.	22 OHM 1/10W J	CRJ10DJ220T
HDMI	R689		nsp	00MNN05220610	CHIP RES.	22 OHM 1/10W J	CRJ10DJ220T
HDMI	R690		nsp	00MNN05220610	CHIP RES.	22 OHM 1/10W J	CRJ10DJ220T
HDMI	R691		nsp	00MNN05220610	CHIP RES.	22 OHM 1/10W J	CRJ10DJ220T
HDMI	R692		nsp	00MNN05220610	CHIP RES.	22 OHM 1/10W J	CRJ10DJ220T
HDMI	R693		nsp	00MNN05220610	CHIP RES.	22 OHM 1/10W J	CRJ10DJ220T
HDMI	R801		nsp	00MNN05153610	CHIP RES.	15K OHM 1/10W J	CRJ10DJ153T
HDMI	R802		nsp	00MNN05103610	CHIP RES.	10K OHM 1/10W J	CRJ10DJ103T
HDMI	R803		nsp	00MNN05471610	CHIP RES.	470 OHM 1/10W J	CRJ10DJ471T
HDMI	R804		nsp	00MNN05471610	CHIP RES.	470 OHM 1/10W J	CRJ10DJ471T
HDMI	R805		nsp	00MNN05471610	CHIP RES.	470 OHM 1/10W J	CRJ10DJ471T
HDMI	R806		nsp	00MNN05151610	CHIP RES.	150 OHM 1/10W J	CRJ10DJ151T
HDMI	R807		nsp	00MNN05103610	CHIP RES.	10K OHM 1/10W J	CRJ10DJ103T
HDMI	R808		nsp	00MNN05102610	CHIP RES.	1K OHM 1/10W J	CRJ10DJ102T
HDMI	R809		nsp	00MNN05102610	CHIP RES.	1K OHM 1/10W J	CRJ10DJ102T
HDMI	R810		nsp	00MNN05471610	CHIP RES.	470 OHM 1/10W J	CRJ10DJ471T
HDMI	R811		nsp	00MNN05471610	CHIP RES.	470 OHM 1/10W J	CRJ10DJ471T
HDMI	R812		nsp	00MNN05471610	CHIP RES.	470 OHM 1/10W J	CRJ10DJ471T
HDMI	R813		nsp	00MNN05103610	CHIP RES.	10K OHM 1/10W J	CRJ10DJ103T
HDMI	R814		nsp	00MNN05153610	CHIP RES.	15K OHM 1/10W J	CRJ10DJ153T
HDMI	R815		nsp	00MNN05103610	CHIP RES.	10K OHM 1/10W J	CRJ10DJ103T
HDMI	R816		nsp	00MNN05471610	CHIP RES.	470 OHM 1/10W J	CRJ10DJ471T
HDMI	R817		nsp	00MNN05471610	CHIP RES.	470 OHM 1/10W J	CRJ10DJ471T
HDMI	R818		nsp	00MNN05471610	CHIP RES.	470 OHM 1/10W J	CRJ10DJ471T
HDMI	R819		nsp	00MNN05151610	CHIP RES.	150 OHM 1/10W J	CRJ10DJ151T
HDMI	R820		nsp	00MNN05103610	CHIP RES.	10K OHM 1/10W J	CRJ10DJ103T
HDMI	R821		nsp	00MNN05102610	CHIP RES.	1K OHM 1/10W J	CRJ10DJ102T
HDMI	R822		nsp	00MNN05102610	CHIP RES.	1K OHM 1/10W J	CRJ10DJ102T
HDMI	R823		nsp	00MNN05471610	CHIP RES.	470 OHM 1/10W J	CRJ10DJ471T
HDMI	R824		nsp	00MNN05471610	CHIP RES.	470 OHM 1/10W J	CRJ10DJ471T
HDMI	R825		nsp	00MNN05471610	CHIP RES.	470 OHM 1/10W J	CRJ10DJ471T
HDMI	R826		nsp	00MNN05103610	CHIP RES.	10K OHM 1/10W J	CRJ10DJ103T
HDMI	R827		nsp	00MNN05153610	CHIP RES.	15K OHM 1/10W J	CRJ10DJ153T
HDMI	R828		nsp	00MNN05103610	CHIP RES.	10K OHM 1/10W J	CRJ10DJ103T
HDMI	R829		nsp	00MNN05471610	CHIP RES.	470 OHM 1/10W J	CRJ10DJ471T
HDMI	R830		nsp	00MNN05471610	CHIP RES.	470 OHM 1/10W J	CRJ10DJ471T
HDMI	R831		nsp	00MNN05471610	CHIP RES.	470 OHM 1/10W J	CRJ10DJ471T
HDMI	R832		nsp	00MNN05151610	CHIP RES.	150 OHM 1/10W J	CRJ10DJ151T
HDMI	R833		nsp	00MNN05103610	CHIP RES.	10K OHM 1/10W J	CRJ10DJ103T
HDMI	R834		nsp	00MNN05102610	CHIP RES.	1K OHM 1/10W J	CRJ10DJ102T
HDMI	R835		nsp	00MNN05102610	CHIP RES.	1K OHM 1/10W J	CRJ10DJ102T
HDMI	R836		nsp	00MNN05471610	CHIP RES.	470 OHM 1/10W J	CRJ10DJ471T
HDMI	R837		nsp	00MNN05471610	CHIP RES.	470 OHM 1/10W J	CRJ10DJ471T
HDMI	R838		nsp	00MNN05471610	CHIP RES.	470 OHM 1/10W J	CRJ10DJ471T
HDMI	R839		nsp	00MNN05103610	CHIP RES.	10K OHM 1/10W J	CRJ10DJ103T
HDMI	R840		nsp	00MNN05183610	CHIP RES.	18K OHM 1/10W J	CRJ10DJ183T
HDMI	R841		nsp	00MNN05103610	CHIP RES.	10K OHM 1/10W J	CRJ10DJ103T
HDMI	R842		nsp	00MNN05471610	CHIP RES.	470 OHM 1/10W J	CRJ10DJ471T
HDMI	R843		nsp	00MNN05471610	CHIP RES.	470 OHM 1/10W J	CRJ10DJ471T
HDMI	R844		nsp	00MNN05561610	CHIP RES.	560 OHM 1/10W J	CRJ10DJ561T
HDMI	R845		nsp	00MNN05103610	CHIP RES.	10K OHM 1/10W J	CRJ10DJ103T
HDMI	R846		nsp	00MNN05102610	CHIP RES.	1K OHM 1/10W J	CRJ10DJ102T
HDMI	R847		nsp	00MNN05102610	CHIP RES.	1K OHM 1/10W J	CRJ10DJ102T
HDMI	R848		nsp	00MNN05102610	CHIP RES.	1K OHM 1/10W J	CRJ10DJ102T
HDMI	R849		nsp	00MNN05183610	CHIP RES.	18K OHM 1/10W J	CRJ10DJ183T
HDMI	R850		nsp	00MNN05103610	CHIP RES.	10K OHM 1/10W J	CRJ10DJ103T
HDMI	R851		nsp	00MNN05471610	CHIP RES.	470 OHM 1/10W J	CRJ10DJ471T

NOTE : "nsp" PART IS LISTED FOR REFERENCE ONLY, MARANTZ WILL NOT SUPPLY THESE PARTS.

P.W.B. NAME	POS. NO.	VERS. COLOR	PART NO. (FOR EUR)	PART NO. (MZ)	PART NAME	DESCRIPTION	
HDMI	R852		nsp	00MNN05471610	CHIP RES.	470 OHM 1/10W J	CRJ10DJ471T
HDMI	R853		nsp	00MNN05561610	CHIP RES.	560 OHM 1/10W J	CRJ10DJ561T
HDMI	R854		nsp	00MNN05103610	CHIP RES.	10K OHM 1/10W J	CRJ10DJ103T
HDMI	R855		nsp	00MNN05102610	CHIP RES.	1K OHM 1/10W J	CRJ10DJ102T
HDMI	R856		nsp	00MNN05102610	CHIP RES.	1K OHM 1/10W J	CRJ10DJ102T
HDMI	R857		nsp	00MNN05183610	CHIP RES.	18K OHM 1/10W J	CRJ10DJ183T
HDMI	R858		nsp	00MNN05103610	CHIP RES.	10K OHM 1/10W J	CRJ10DJ103T
HDMI	R859		nsp	00MNN05471610	CHIP RES.	470 OHM 1/10W J	CRJ10DJ471T
HDMI	R860		nsp	00MNN05471610	CHIP RES.	470 OHM 1/10W J	CRJ10DJ471T
HDMI	R861		nsp	00MNN05561610	CHIP RES.	560 OHM 1/10W J	CRJ10DJ561T
HDMI	R862		nsp	00MNN05103610	CHIP RES.	10K OHM 1/10W J	CRJ10DJ103T
HDMI	R863		nsp	00MNN05102610	CHIP RES.	1K OHM 1/10W J	CRJ10DJ102T
HDMI	R864		nsp	00MNN05102610	CHIP RES.	1K OHM 1/10W J	CRJ10DJ102T
HDMI	R902		nsp	00MNN05102610	CHIP RES.	1K OHM 1/10W J	CRJ10DJ102T
HDMI	R903		nsp	00MNN05000610	CHIP RES.	0 OHM 1/10W J	CRJ10DJ0R0T
HDMI	R904		nsp	00MNN05105610	CHIP RES.	1M OHM 1/10W J	CRJ10DJ105T
HDMI	R905		nsp	00MNN05010610	CHIP RES.	1 OHM 1/10W J	CRJ10DJ1R0T
HDMI	R906		nsp	00MNN05103610	CHIP RES.	10K OHM 1/10W J	CRJ10DJ103T
HDMI	R907		nsp	00MNN05103610	CHIP RES.	10K OHM 1/10W J	CRJ10DJ103T
HDMI	R909		nsp	00MNN05103610	CHIP RES.	10K OHM 1/10W J	CRJ10DJ103T
HDMI	R910		nsp	00MNN05103610	CHIP RES.	10K OHM 1/10W J	CRJ10DJ103T
HDMI	R911		nsp	00MNN05103610	CHIP RES.	10K OHM 1/10W J	CRJ10DJ103T
HDMI	R912		nsp	00MNN05103610	CHIP RES.	10K OHM 1/10W J	CRJ10DJ103T
HDMI	R913		00MNM12200020	00MNM12200020	CHIP RES.	220 OHM 1%	CRJ10DF2200T
HDMI	R914		nsp	90M-NN000810R	CHIP RES.	82 OHM 1%	CRJ10DF82R0T
HDMI	R915		nsp	90M-NN000820R	CHIP RES.	15 OHM 1%	CRJ10DF15R0T
HDMI	R916		00MNM12200020	00MNM12200020	CHIP RES.	220 OHM 1%	CRJ10DF2200T
HDMI	R917		nsp	90M-NN000810R	CHIP RES.	82 OHM 1%	CRJ10DF82R0T
HDMI	R918		nsp	90M-NN000820R	CHIP RES.	15 OHM 1%	CRJ10DF15R0T
HDMI	R919		00MNM12200020	00MNM12200020	CHIP RES.	220 OHM 1%	CRJ10DF2200T
HDMI	R920		nsp	90M-NN000810R	CHIP RES.	82 OHM 1%	CRJ10DF82R0T
HDMI	R921		nsp	90M-NN000820R	CHIP RES.	15 OHM 1%	CRJ10DF15R0T
HDMI	R922		00MNM12200020	00MNM12200020	CHIP RES.	220 OHM 1%	CRJ10DF2200T
HDMI	R923		00MNM12200020	00MNM12200020	CHIP RES.	220 OHM 1%	CRJ10DF2200T
HDMI	R925		00MNM12200020	00MNM12200020	CHIP RES.	220 OHM 1%	CRJ10DF2200T
HDMI	R926		00MNM11800020	00MNM11800020	CHIP RES.	180 OHM 1%	CRJ10DF1800T
HDMI	R927		00MNM11800020	00MNM11800020	CHIP RES.	180 OHM 1%	CRJ10DF1800T
HDMI	R928		00MNM12200020	00MNM12200020	CHIP RES.	220 OHM 1%	CRJ10DF2200T
HDMI	R929		00MNM11800020	00MNM11800020	CHIP RES.	180 OHM 1%	CRJ10DF1800T
HDMI	R930		00MNM11800020	00MNM11800020	CHIP RES.	180 OHM 1%	CRJ10DF1800T
HDMI	R931		00MNM12200020	00MNM12200020	CHIP RES.	220 OHM 1%	CRJ10DF2200T
HDMI	R932		00MNM11800020	00MNM11800020	CHIP RES.	180 OHM 1%	CRJ10DF1800T
HDMI	R933		00MNM11800020	00MNM11800020	CHIP RES.	180 OHM 1%	CRJ10DF1800T
HDMI	R934		00MNM12200020	00MNM12200020	CHIP RES.	220 OHM 1%	CRJ10DF2200T
HDMI	R935		00MNM11800020	00MNM11800020	CHIP RES.	180 OHM 1%	CRJ10DF1800T
HDMI	R936		00MNM11800020	00MNM11800020	CHIP RES.	180 OHM 1%	CRJ10DF1800T
HDMI	R939		nsp	00MNN05472610	CHIP RES.	4.7K OHM 1/10W J	CRJ10DJ472T
HDMI	R940		nsp	00MNN05472610	CHIP RES.	4.7K OHM 1/10W J	CRJ10DJ472T
HDMI	R941		nsp	00MNN05472610	CHIP RES.	4.7K OHM 1/10W J	CRJ10DJ472T
HDMI	R942		nsp	00MNN05472610	CHIP RES.	4.7K OHM 1/10W J	CRJ10DJ472T
HDMI	R943		nsp	00MNN05103610	CHIP RES.	10K OHM 1/10W J	CRJ10DJ103T
HDMI	R944		nsp	00MNN05103610	CHIP RES.	10K OHM 1/10W J	CRJ10DJ103T
HDMI	R992		nsp	00MNN05000610	CHIP RES.	0 OHM 1/10W J	CRJ10DJ0R0T
HDMI	R993		nsp	00MNN05000610	CHIP RES.	0 OHM 1/10W J	CRJ10DJ0R0T
HDMI	R994		nsp	00MNN05000610	CHIP RES.	0 OHM 1/10W J	CRJ10DJ0R0T
HDMI	R995		nsp	00MNN05000610	CHIP RES.	0 OHM 1/10W J	CRJ10DJ0R0T
HDMI	R996		nsp	00MNN05000610	CHIP RES.	0 OHM 1/10W J	CRJ10DJ0R0T
HDMI	R997		nsp	00MNN05000610	CHIP RES.	0 OHM 1/10W J	CRJ10DJ0R0T
HDMI	R998		nsp	00MNN05000610	CHIP RES.	0 OHM 1/10W J	CRJ10DJ0R0T
HDMI	R999		nsp	00MNN05000610	CHIP RES.	0 OHM 1/10W J	CRJ10DJ0R0T
HDMI	RN31		90M-BW000400R	90M-BW000400R	RES. COMPO.	22 OHM X4 2012	CRJ104DJ220T
HDMI	RN32		90M-BW000400R	90M-BW000400R	RES. COMPO.	22 OHM X4 2012	CRJ104DJ220T
HDMI	RN33		90M-BW000400R	90M-BW000400R	RES. COMPO.	22 OHM X4 2012	CRJ104DJ220T
HDMI	RN34		90M-BW000400R	90M-BW000400R	RES. COMPO.	22 OHM X4 2012	CRJ104DJ220T
HDMI	RN35		90M-BW000400R	90M-BW000400R	RES. COMPO.	22 OHM X4 2012	CRJ104DJ220T
HDMI	RN37		90M-BW000400R	90M-BW000400R	RES. COMPO.	22 OHM X4 2012	CRJ104DJ220T
HDMI	RN38		90M-BW000400R	90M-BW000400R	RES. COMPO.	22 OHM X4 2012	CRJ104DJ220T

NOTE : "nsp" PART IS LISTED FOR REFERENCE ONLY, MARANTZ WILL NOT SUPPLY THESE PARTS.

P.W.B. NAME	POS. NO.	VERS. COLOR	PART NO. (FOR EUR)	PART NO. (MZ)	PART NAME	DESCRIPTION	
HDMI	RN39		90M-BW000400R	90M-BW000400R	RES. COMPO.	22 OHM X4 2012	CRJ104DJ220T
HDMI	RN40		90M-BW000400R	90M-BW000400R	RES. COMPO.	22 OHM X4 2012	CRJ104DJ220T
HDMI	RN41		90M-BW000400R	90M-BW000400R	RES. COMPO.	22 OHM X4 2012	CRJ104DJ220T
HDMI	RN42		90M-BW000400R	90M-BW000400R	RES. COMPO.	22 OHM X4 2012	CRJ104DJ220T
HDMI	RN43		90M-BW000400R	90M-BW000400R	RES. COMPO.	22 OHM X4 2012	CRJ104DJ220T
HDMI	RN44		90M-BW000470R	90M-BW000470R	RES. COMPO.	RES ARRAY 0 OHM 1608X4	CRJ104DJ0R0T
HDMI	RN45		90M-BW000470R	90M-BW000470R	RES. COMPO.	RES ARRAY 0 OHM 1608X4	CRJ104DJ0R0T
HDMI	RN61		90M-BW000400R	90M-BW000400R	RES. COMPO.	22 OHM X4 2012	CRJ104DJ220T
HDMI	RN62		90M-BW000400R	90M-BW000400R	RES. COMPO.	22 OHM X4 2012	CRJ104DJ220T
HDMI	RN63		90M-BW000400R	90M-BW000400R	RES. COMPO.	22 OHM X4 2012	CRJ104DJ220T
HDMI	RN64		90M-BW000470R	90M-BW000470R	RES. COMPO.	RES ARRAY 0 OHM 1608X4	CRJ104DJ0R0T
HDMI	RN65		90M-BW000470R	90M-BW000470R	RES. COMPO.	RES ARRAY 0 OHM 1608X4	CRJ104DJ0R0T
HDMI	RN66		90M-BW000400R	90M-BW000400R	RES. COMPO.	22 OHM X4 2012	CRJ104DJ220T
HDMI	RN67		90M-BW000400R	90M-BW000400R	RES. COMPO.	22 OHM X4 2012	CRJ104DJ220T
HDMI	RN68		90M-BW000400R	90M-BW000400R	RES. COMPO.	22 OHM X4 2012	CRJ104DJ220T
HDMI	RN69		90M-BW000400R	90M-BW000400R	RES. COMPO.	22 OHM X4 2012	CRJ104DJ220T
HDMI	RN70		90M-BW000400R	90M-BW000400R	RES. COMPO.	22 OHM X4 2012	CRJ104DJ220T
HDMI	RN71		90M-BW000400R	90M-BW000400R	RES. COMPO.	22 OHM X4 2012	CRJ104DJ220T
HDMI	RN72		90M-BW000400R	90M-BW000400R	RES. COMPO.	22 OHM X4 2012	CRJ104DJ220T
HDMI	RN73		90M-BW000400R	90M-BW000400R	RES. COMPO.	22 OHM X4 2012	CRJ104DJ220T
HDMI	RN74		90M-BW000400R	90M-BW000400R	RES. COMPO.	22 OHM X4 2012	CRJ104DJ220T
HDMI	RN75		90M-BW000400R	90M-BW000400R	RES. COMPO.	22 OHM X4 2012	CRJ104DJ220T
HDMI	RN76		90M-BW000400R	90M-BW000400R	RES. COMPO.	22 OHM X4 2012	CRJ104DJ220T
HDMI	RN77		90M-BW000400R	90M-BW000400R	RES. COMPO.	22 OHM X4 2012	CRJ104DJ220T
HDMI	RN78		90M-BW000400R	90M-BW000400R	RES. COMPO.	22 OHM X4 2012	CRJ104DJ220T
HDMI	RN79		90M-BW000480R	90M-BW000480R	RES. COMPO.	RES ARRAY 47K 1608X4	CRJ104DJ473T
HDMI	RN81		90M-BW000480R	90M-BW000480R	RES. COMPO.	RES ARRAY 47K 1608X4	CRJ104DJ473T
HDMI	RN83		90M-BW000400R	90M-BW000400R	RES. COMPO.	22 OHM X4 2012	CRJ104DJ220T
HDMI	RN84		90M-BW000400R	90M-BW000400R	RES. COMPO.	22 OHM X4 2012	CRJ104DJ220T
HDMI	RN85		90M-BW000400R	90M-BW000400R	RES. COMPO.	22 OHM X4 2012	CRJ104DJ220T
HDMI	RN86		90M-BW000400R	90M-BW000400R	RES. COMPO.	22 OHM X4 2012	CRJ104DJ220T
HDMI	RN87		90M-BW000400R	90M-BW000400R	RES. COMPO.	22 OHM X4 2012	CRJ104DJ220T
HDMI	RN88		90M-BW000400R	90M-BW000400R	RES. COMPO.	22 OHM X4 2012	CRJ104DJ220T
HDMI	RN89		90M-BW000400R	90M-BW000400R	RES. COMPO.	22 OHM X4 2012	CRJ104DJ220T
HDMI	RN90		90M-BW000400R	90M-BW000400R	RES. COMPO.	22 OHM X4 2012	CRJ104DJ220T
HDMI	X301		90M-JX001330R	90M-JX001330R	X'TAL	27MHZ	COX27000E180TF
HDMI	X601		90M-JX001360R	90M-JX001360R	X'TAL	28.636MHZ	COX28636E330TF
HDMI	X901		90M-JX001370R	90M-JX001370R	X'TAL	16.000MHZ	COX16000E120TF
					INPUT PWB (CUP11871Z)		
INPUT	BC72		nsp	nsp	CORD	WIRE ASSY	CWB1C902150EN
INPUT	BN11		nsp	nsp	CORD	WIRE ASSY	CWB1B907300EN
INPUT	BN19		nsp	nsp	CORD	WIRE ASSY	CWB1B903100EN
INPUT	BN23		nsp	nsp	CORD	WIRE ASSY	CWZSR7001BN23
INPUT	BN24		nsp	nsp	CORD	WIRE ASSY	CWZSR7001BN24
INPUT	BN30		nsp	nsp	CORD	WIRE ASSY	CWB1D912130EN
INPUT	BN46		nsp	nsp	CORD	WIRE ASSY	CWB1B904100EN
INPUT	BN71		nsp	nsp	CORD	WIRE ASSY	CWZSR7001BN71
INPUT	BN93		nsp	nsp	CORD	WIRE ASSY	CWB1D908450BM
INPUT	C201		nsp	00MDD95471300	CER. CAP.	470PF 50V JA	CCUS1H471JA
INPUT	C202		nsp	00MDD95471300	CER. CAP.	470PF 50V JA	CCUS1H471JA
INPUT	C203		nsp	00MDD95471300	CER. CAP.	470PF 50V JA	CCUS1H471JA
INPUT	C204		nsp	00MDD95471300	CER. CAP.	470PF 50V JA	CCUS1H471JA
INPUT	C205		nsp	00MDD95471300	CER. CAP.	470PF 50V JA	CCUS1H471JA
INPUT	C206		nsp	00MDD95471300	CER. CAP.	470PF 50V JA	CCUS1H471JA
INPUT	C207		nsp	00MDD95471300	CER. CAP.	470PF 50V JA	CCUS1H471JA
INPUT	C208		nsp	00MDD95471300	CER. CAP.	470PF 50V JA	CCUS1H471JA
INPUT	C209		nsp	00MDD95471300	CER. CAP.	470PF 50V JA	CCUS1H471JA
INPUT	C210		nsp	00MDD95471300	CER. CAP.	470PF 50V JA	CCUS1H471JA
INPUT	C211		nsp	00MDD95471300	CER. CAP.	470PF 50V JA	CCUS1H471JA
INPUT	C212		nsp	00MDD95471300	CER. CAP.	470PF 50V JA	CCUS1H471JA
INPUT	C213		nsp	00MDD95471300	CER. CAP.	470PF 50V JA	CCUS1H471JA
INPUT	C214		nsp	00MDD95471300	CER. CAP.	470PF 50V JA	CCUS1H471JA
INPUT	C215		nsp	00MDD95471300	CER. CAP.	470PF 50V JA	CCUS1H471JA
INPUT	C216		nsp	00MDD95471300	CER. CAP.	470PF 50V JA	CCUS1H471JA
INPUT	C217		nsp	00MDD95471300	CER. CAP.	470PF 50V JA	CCUS1H471JA
INPUT	C218		nsp	00MDD95471300	CER. CAP.	470PF 50V JA	CCUS1H471JA
INPUT	C219		nsp	00MDD95471300	CER. CAP.	470PF 50V JA	CCUS1H471JA

NOTE : "nsp" PART IS LISTED FOR REFERENCE ONLY, MARANTZ WILL NOT SUPPLY THESE PARTS.

P.W.B. NAME	POS. NO.	VERS. COLOR	PART NO. (FOR EUR)	PART NO. (MZ)	PART NAME	DESCRIPTION	
INPUT	C220		nsp	00MDD95471300	CER. CAP.	470PF 50V JA	CCUS1H471JA
INPUT	C221		nsp	00MDD95471300	CER. CAP.	470PF 50V JA	CCUS1H471JA
INPUT	C222		nsp	00MDD95471300	CER. CAP.	470PF 50V JA	CCUS1H471JA
INPUT	C223		nsp	00MDD95471300	CER. CAP.	470PF 50V JA	CCUS1H471JA
INPUT	C224		nsp	00MDD95471300	CER. CAP.	470PF 50V JA	CCUS1H471JA
INPUT	C225		nsp	00MOA10605020	ELECT CAP.	10UF 50V	CCEA1HH100T
INPUT	C226		nsp	00MOA10605020	ELECT CAP.	10UF 50V	CCEA1HH100T
INPUT	C233		nsp	00MOA10605020	ELECT CAP.	10UF 50V	CCEA1HH100T
INPUT	C234		nsp	00MOA10605020	ELECT CAP.	10UF 50V	CCEA1HH100T
INPUT	C235		nsp	00MOA10605020	ELECT CAP.	10UF 50V	CCEA1HH100T
INPUT	C236		nsp	00MOA10605020	ELECT CAP.	10UF 50V	CCEA1HH100T
INPUT	C237		nsp	00MOA10605020	ELECT CAP.	10UF 50V	CCEA1HH100T
INPUT	C238		nsp	00MOA10605020	ELECT CAP.	10UF 50V	CCEA1HH100T
INPUT	C239		nsp	00MOA10605020	ELECT CAP.	10UF 50V	CCEA1HH100T
INPUT	C240		nsp	00MOA10605020	ELECT CAP.	10UF 50V	CCEA1HH100T
INPUT	C241		nsp	00MOA10605020	ELECT CAP.	10UF 50V	CCEA1HH100T
INPUT	C242		nsp	00MOA10605020	ELECT CAP.	10UF 50V	CCEA1HH100T
INPUT	C243		nsp	00MOA10605020	ELECT CAP.	10UF 50V	CCEA1HH100T
INPUT	C244		nsp	00MOA10605020	ELECT CAP.	10UF 50V	CCEA1HH100T
INPUT	C245		nsp	90M-OA000110R	ELECT CAP.	10UF 50V	HCEA1HAHS100T
INPUT	C246		nsp	90M-OA000110R	ELECT CAP.	10UF 50V	HCEA1HAHS100T
INPUT	C247		nsp	90M-OA000110R	ELECT CAP.	10UF 50V	HCEA1HAHS100T
INPUT	C248		nsp	90M-OA000110R	ELECT CAP.	10UF 50V	HCEA1HAHS100T
INPUT	C249		nsp	90M-OA000110R	ELECT CAP.	10UF 50V	HCEA1HAHS100T
INPUT	C250		nsp	90M-OA000110R	ELECT CAP.	10UF 50V	HCEA1HAHS100T
INPUT	C251		nsp	90M-OA000110R	ELECT CAP.	10UF 50V	HCEA1HAHS100T
INPUT	C252		nsp	90M-OA000110R	ELECT CAP.	10UF 50V	HCEA1HAHS100T
INPUT	C253		nsp	00MDK96104300	CER. CAP.	0.1UF 50V ZF	CCUS1H104ZF
INPUT	C254		nsp	00MDK96104300	CER. CAP.	0.1UF 50V ZF	CCUS1H104ZF
INPUT	C255		nsp	90M-OA000110R	ELECT CAP.	10UF 50V	HCEA1HAHS100T
INPUT	C256		nsp	90M-OA000110R	ELECT CAP.	10UF 50V	HCEA1HAHS100T
INPUT	C257		nsp	00MDK96104300	CER. CAP.	0.1UF 50V ZF	CCUS1H104ZF
INPUT	C258		nsp	00MDK96104300	CER. CAP.	0.1UF 50V ZF	CCUS1H104ZF
INPUT	C259		nsp	90M-OA000110R	ELECT CAP.	10UF 50V	HCEA1HAHS100T
INPUT	C260		nsp	90M-OA000110R	ELECT CAP.	10UF 50V	HCEA1HAHS100T
INPUT	C261		nsp	00MDK96104300	CER. CAP.	0.1UF 50V ZF	CCUS1H104ZF
INPUT	C262		nsp	00MDK96104300	CER. CAP.	0.1UF 50V ZF	CCUS1H104ZF
INPUT	C263		nsp	90M-OA000110R	ELECT CAP.	10UF 50V	HCEA1HAHS100T
INPUT	C264		nsp	90M-OA000110R	ELECT CAP.	10UF 50V	HCEA1HAHS100T
INPUT	C265		nsp	00MDK96104300	CER. CAP.	0.1UF 50V ZF	CCUS1H104ZF
INPUT	C266		nsp	00MDK96104300	CER. CAP.	0.1UF 50V ZF	CCUS1H104ZF
INPUT	C267		nsp	90M-OA000110R	ELECT CAP.	10UF 50V	HCEA1HAHS100T
INPUT	C268		nsp	90M-OA000110R	ELECT CAP.	10UF 50V	HCEA1HAHS100T
INPUT	C269		nsp	90M-OA000110R	ELECT CAP.	10UF 50V	HCEA1HAHS100T
INPUT	C270		nsp	90M-OA000110R	ELECT CAP.	10UF 50V	HCEA1HAHS100T
INPUT	C271		nsp	00MDK96104300	CER. CAP.	0.1UF 50V ZF	CCUS1H104ZF
INPUT	C272		nsp	00MDK96104300	CER. CAP.	0.1UF 50V ZF	CCUS1H104ZF
INPUT	C273		nsp	90M-OA000110R	ELECT CAP.	10UF 50V	HCEA1HAHS100T
INPUT	C274		nsp	90M-OA000110R	ELECT CAP.	10UF 50V	HCEA1HAHS100T
INPUT	C275		nsp	00MOA10605020	ELECT CAP.	10UF 50V	CCEA1HH100T
INPUT	C276		nsp	00MOA10605020	ELECT CAP.	10UF 50V	CCEA1HH100T
INPUT	C277		nsp	00MDK96104300	CER. CAP.	0.1UF 50V ZF	CCUS1H104ZF
INPUT	C278		nsp	00MDK96104300	CER. CAP.	0.1UF 50V ZF	CCUS1H104ZF
INPUT	C279		nsp	00MOA10605020	ELECT CAP.	10UF 50V	CCEA1HH100T
INPUT	C280		nsp	00MOA10605020	ELECT CAP.	10UF 50V	CCEA1HH100T
INPUT	C281		nsp	00MOA10605020	ELECT CAP.	10UF 50V	CCEA1HH100T
INPUT	C282		nsp	00MOA10605020	ELECT CAP.	10UF 50V	CCEA1HH100T
INPUT	C283		nsp	00MDK96104300	CER. CAP.	0.1UF 50V ZF	CCUS1H104ZF
INPUT	C284		nsp	00MDK96104300	CER. CAP.	0.1UF 50V ZF	CCUS1H104ZF
INPUT	C285		nsp	00MOA10605020	ELECT CAP.	10UF 50V	CCEA1HH100T
INPUT	C286		nsp	00MOA10605020	ELECT CAP.	10UF 50V	CCEA1HH100T
INPUT	C287		nsp	00MDK96104300	CER. CAP.	0.1UF 50V ZF	CCUS1H104ZF
INPUT	C288		nsp	00MDK96104300	CER. CAP.	0.1UF 50V ZF	CCUS1H104ZF
INPUT	C289		nsp	00MDD95101300	CER. CAP.	100PF 50V JA	CCUS1H101JA
INPUT	C290		nsp	00MDK96104300	CER. CAP.	0.1UF 50V ZF	CCUS1H104ZF
INPUT	C291		nsp	00MDK96104300	CER. CAP.	0.1UF 50V ZF	CCUS1H104ZF
INPUT	C292		nsp	00MDD95101300	CER. CAP.	100PF 50V JA	CCUS1H101JA

NOTE : "nsp" PART IS LISTED FOR REFERENCE ONLY, MARANTZ WILL NOT SUPPLY THESE PARTS.

P.W.B. NAME	POS. NO.	VERS. COLOR	PART NO. (FOR EUR)	PART NO. (MZ)	PART NAME	DESCRIPTION	
INPUT	C293		nsp	90M-OA000110R	ELECT CAP.	10UF 50V	HCEA1HAHS100T
INPUT	C294		nsp	00MDK96104300	CER. CAP.	0.1UF 50V ZF	CCUS1H104ZF
INPUT	C295		nsp	00MDK96104300	CER. CAP.	0.1UF 50V ZF	CCUS1H104ZF
INPUT	C296		nsp	00MDD91100300	CER. CAP.	10PF 50V JA	CCUS1H100JA
INPUT	C297		nsp	90M-OA000110R	ELECT CAP.	10UF 50V	HCEA1HAHS100T
INPUT	C298		nsp	90M-OA000110R	ELECT CAP.	10UF 50V	HCEA1HAHS100T
INPUT	C299		nsp	90M-OA000110R	ELECT CAP.	10UF 50V	HCEA1HAHS100T
INPUT	C300		nsp	90M-OA000110R	ELECT CAP.	10UF 50V	HCEA1HAHS100T
INPUT	C301		nsp	90M-OA000110R	ELECT CAP.	10UF 50V	HCEA1HAHS100T
INPUT	C302		nsp	90M-OA000110R	ELECT CAP.	10UF 50V	HCEA1HAHS100T
INPUT	C303		nsp	90M-OA000110R	ELECT CAP.	10UF 50V	HCEA1HAHS100T
INPUT	C304		nsp	90M-OA000100R	ELECT CAP.	47UF 50V	HCEA1EAHS470T
INPUT	C305		nsp	00MDK96104300	CER. CAP.	0.1UF 50V ZF	CCUS1H104ZF
INPUT	C306		nsp	90M-OA000100R	ELECT CAP.	47UF 50V	HCEA1EAHS470T
INPUT	C307		nsp	00MDK96104300	CER. CAP.	0.1UF 50V ZF	CCUS1H104ZF
INPUT	C308		nsp	00MDD95101300	CER. CAP.	100PF 50V JA	CCUS1H101JA
INPUT	C309		nsp	90M-OA000110R	ELECT CAP.	10UF 50V	HCEA1HAHS100T
INPUT	C310		nsp	90M-OA000110R	ELECT CAP.	10UF 50V	HCEA1HAHS100T
INPUT	C311		nsp	90M-OA000110R	ELECT CAP.	10UF 50V	HCEA1HAHS100T
INPUT	C312		nsp	90M-OA000110R	ELECT CAP.	10UF 50V	HCEA1HAHS100T
INPUT	C313		nsp	90M-OA000110R	ELECT CAP.	10UF 50V	HCEA1HAHS100T
INPUT	C315		nsp	90M-OA000100R	ELECT CAP.	47UF 50V	HCEA1EAHS470T
INPUT	C316		nsp	00MDK96104300	CER. CAP.	0.1UF 50V ZF	CCUS1H104ZF
INPUT	C317		nsp	90M-OA000100R	ELECT CAP.	47UF 50V	HCEA1EAHS470T
INPUT	C318		nsp	00MDK96104300	CER. CAP.	0.1UF 50V ZF	CCUS1H104ZF
INPUT	C319		nsp	00MDD95101300	CER. CAP.	100PF 50V JA	CCUS1H101JA
INPUT	C320		nsp	90M-OA000130R	ELECT CAP.	22UF 50V	HCEA1HAHS220T
INPUT	C321		nsp	00MOA22605020	ELECT CAP.	22UF 50V	CCEA1HH220T
INPUT	C322		nsp	90M-OA000130R	ELECT CAP.	22UF 50V	HCEA1HAHS220T
INPUT	C323		nsp	00MOA22605020	ELECT CAP.	22UF 50V	CCEA1HH220T
INPUT	C324		nsp	00MDD95101300	CER. CAP.	100PF 50V JA	CCUS1H101JA
INPUT	C325		nsp	00MDD95101300	CER. CAP.	100PF 50V JA	CCUS1H101JA
INPUT	C326		nsp	00MDK96104300	CER. CAP.	0.1UF 50V ZF	CCUS1H104ZF
INPUT	C327		nsp	00MDK96104300	CER. CAP.	0.1UF 50V ZF	CCUS1H104ZF
INPUT	C328		nsp	90M-OA000130R	ELECT CAP.	22UF 50V	HCEA1HAHS220T
INPUT	C329		nsp	90M-OA000130R	ELECT CAP.	22UF 50V	HCEA1HAHS220T
INPUT	C330		nsp	00MDD95471300	CER. CAP.	470PF 50V JA	CCUS1H471JA
INPUT	C331		nsp	00MDD95471300	CER. CAP.	470PF 50V JA	CCUS1H471JA
INPUT	C332		nsp	90M-OA000130R	ELECT CAP.	22UF 50V	HCEA1HAHS220T
INPUT	C333		nsp	00MOA22605020	ELECT CAP.	22UF 50V	CCEA1HH220T
INPUT	C334		nsp	90M-OA000130R	ELECT CAP.	22UF 50V	HCEA1HAHS220T
INPUT	C335		nsp	00MOA22605020	ELECT CAP.	22UF 50V	CCEA1HH220T
INPUT	C336		nsp	00MDD95101300	CER. CAP.	100PF 50V JA	CCUS1H101JA
INPUT	C337		nsp	00MDD95101300	CER. CAP.	100PF 50V JA	CCUS1H101JA
INPUT	C338		nsp	00MDK96104300	CER. CAP.	0.1UF 50V ZF	CCUS1H104ZF
INPUT	C339		nsp	00MDK96104300	CER. CAP.	0.1UF 50V ZF	CCUS1H104ZF
INPUT	C340		nsp	90M-OA000130R	ELECT CAP.	22UF 50V	HCEA1HAHS220T
INPUT	C341		nsp	90M-OA000130R	ELECT CAP.	22UF 50V	HCEA1HAHS220T
INPUT	C342		nsp	00MDD95471300	CER. CAP.	470PF 50V JA	CCUS1H471JA
INPUT	C343		nsp	00MDD95471300	CER. CAP.	470PF 50V JA	CCUS1H471JA
INPUT	C344		nsp	90M-OA000130R	ELECT CAP.	22UF 50V	HCEA1HAHS220T
INPUT	C345		nsp	00MOA22605020	ELECT CAP.	22UF 50V	CCEA1HH220T
INPUT	C346		nsp	90M-OA000130R	ELECT CAP.	22UF 50V	HCEA1HAHS220T
INPUT	C347		nsp	00MOA22605020	ELECT CAP.	22UF 50V	CCEA1HH220T
INPUT	C348		nsp	00MDD95101300	CER. CAP.	100PF 50V JA	CCUS1H101JA
INPUT	C349		nsp	00MDD95101300	CER. CAP.	100PF 50V JA	CCUS1H101JA
INPUT	C350		nsp	00MDK96104300	CER. CAP.	0.1UF 50V ZF	CCUS1H104ZF
INPUT	C351		nsp	00MDK96104300	CER. CAP.	0.1UF 50V ZF	CCUS1H104ZF
INPUT	C352		nsp	90M-OA000130R	ELECT CAP.	22UF 50V	HCEA1HAHS220T
INPUT	C353		nsp	90M-OA000130R	ELECT CAP.	22UF 50V	HCEA1HAHS220T
INPUT	C354		nsp	00MDD95471300	CER. CAP.	470PF 50V JA	CCUS1H471JA
INPUT	C355		nsp	00MDD95471300	CER. CAP.	470PF 50V JA	CCUS1H471JA
INPUT	C356		nsp	90M-OA000130R	ELECT CAP.	22UF 50V	HCEA1HAHS220T
INPUT	C357		nsp	00MOA22605020	ELECT CAP.	22UF 50V	CCEA1HH220T
INPUT	C358		nsp	90M-OA000130R	ELECT CAP.	22UF 50V	HCEA1HAHS220T
INPUT	C359		nsp	90M-OA000100R	ELECT CAP.	47UF 50V	HCEA1EAHS470T
INPUT	C360		nsp	00MDD95101300	CER. CAP.	100PF 50V JA	CCUS1H101JA

NOTE : "nsp" PART IS LISTED FOR REFERENCE ONLY, MARANTZ WILL NOT SUPPLY THESE PARTS.

P.W.B. NAME	POS. NO.	VERS. COLOR	PART NO. (FOR EUR)	PART NO. (MZ)	PART NAME	DESCRIPTION	
INPUT	C361		nsp	00MDD95101300	CER. CAP.	100PF 50V JA	CCUS1H101JA
INPUT	C362		nsp	00MDK96104300	CER. CAP.	0.1UF 50V ZF	CCUS1H104ZF
INPUT	C363		nsp	00MDK96104300	CER. CAP.	0.1UF 50V ZF	CCUS1H104ZF
INPUT	C364		nsp	90M-OA000130R	ELECT CAP.	22UF 50V	HCEA1HAHS220T
INPUT	C365		nsp	90M-OA000130R	ELECT CAP.	22UF 50V	HCEA1HAHS220T
INPUT	C366		nsp	00MDD95471300	CER. CAP.	470PF 50V JA	CCUS1H471JA
INPUT	C367		nsp	00MDD95471300	CER. CAP.	470PF 50V JA	CCUS1H471JA
INPUT	C368		nsp	90M-OA000130R	ELECT CAP.	22UF 50V	HCEA1HAHS220T
INPUT	C369		nsp	00MOA22605020	ELECT CAP.	22UF 50V	CCEA1HH220T
INPUT	C370		nsp	90M-OA000130R	ELECT CAP.	22UF 50V	HCEA1HAHS220T
INPUT	C371		nsp	00MOA22605020	ELECT CAP.	22UF 50V	CCEA1HH220T
INPUT	C372		nsp	00MDD95101300	CER. CAP.	100PF 50V JA	CCUS1H101JA
INPUT	C373		nsp	00MDD95101300	CER. CAP.	100PF 50V JA	CCUS1H101JA
INPUT	C374		nsp	00MDK96104300	CER. CAP.	0.1UF 50V ZF	CCUS1H104ZF
INPUT	C375		nsp	00MDK96104300	CER. CAP.	0.1UF 50V ZF	CCUS1H104ZF
INPUT	C376		nsp	90M-OA000130R	ELECT CAP.	22UF 50V	HCEA1HAHS220T
INPUT	C377		nsp	90M-OA000130R	ELECT CAP.	22UF 50V	HCEA1HAHS220T
INPUT	C378		nsp	00MDD95471300	CER. CAP.	470PF 50V JA	CCUS1H471JA
INPUT	C379		nsp	00MDD95471300	CER. CAP.	470PF 50V JA	CCUS1H471JA
INPUT	C380		nsp	90M-OA000130R	ELECT CAP.	22UF 50V	HCEA1HAHS220T
INPUT	C381		nsp	00MOA22605020	ELECT CAP.	22UF 50V	CCEA1HH220T
INPUT	C382		nsp	90M-OA000130R	ELECT CAP.	22UF 50V	HCEA1HAHS220T
INPUT	C383		nsp	00MOA22605020	ELECT CAP.	22UF 50V	CCEA1HH220T
INPUT	C384		nsp	00MDD95101300	CER. CAP.	100PF 50V JA	CCUS1H101JA
INPUT	C385		nsp	00MDD95101300	CER. CAP.	100PF 50V JA	CCUS1H101JA
INPUT	C386		nsp	00MDK96104300	CER. CAP.	0.1UF 50V ZF	CCUS1H104ZF
INPUT	C387		nsp	00MDK96104300	CER. CAP.	0.1UF 50V ZF	CCUS1H104ZF
INPUT	C388		nsp	90M-OA000130R	ELECT CAP.	22UF 50V	HCEA1HAHS220T
INPUT	C389		nsp	90M-OA000130R	ELECT CAP.	22UF 50V	HCEA1HAHS220T
INPUT	C390		nsp	00MDD95471300	CER. CAP.	470PF 50V JA	CCUS1H471JA
INPUT	C391		nsp	00MDD95471300	CER. CAP.	470PF 50V JA	CCUS1H471JA
INPUT	C392		nsp	00MOA10605020	ELECT CAP.	10UF 50V	CCEA1HH100T
INPUT	C393		nsp	00MOA22701620	ELECT CAP.	220UF 16V	CCEA1CH221T
INPUT	C394		nsp	00MDD95101300	CER. CAP.	100PF 50V JA	CCUS1H101JA
INPUT	C395		nsp	00MDD95101300	CER. CAP.	100PF 50V JA	CCUS1H101JA
INPUT	C396		nsp	00MDD95101300	CER. CAP.	100PF 50V JA	CCUS1H101JA
INPUT	C397		nsp	00MDD95101300	CER. CAP.	100PF 50V JA	CCUS1H101JA
INPUT	C398		nsp	00MDD95101300	CER. CAP.	100PF 50V JA	CCUS1H101JA
INPUT	C399		nsp	00MDD95101300	CER. CAP.	100PF 50V JA	CCUS1H101JA
INPUT	C400		nsp	00MDK96104300	CER. CAP.	0.1UF 50V ZF	CCUS1H104ZF
INPUT	C401		nsp	00MOA10702520	ELECT CAP.	100UF 25V	CCEA1EH101T
INPUT	C402		nsp	00MDK96104300	CER. CAP.	0.1UF 50V ZF	CCUS1H104ZF
INPUT	C403		nsp	00MOA10702520	ELECT CAP.	100UF 25V	CCEA1EH101T
INPUT	C404		nsp	00MDK96104300	CER. CAP.	0.1UF 50V ZF	CCUS1H104ZF
INPUT	C405		90M-EA000930R	90M-EA000930R	ELECT CAP.	3300UF 16V	CCEA1CH332E
INPUT	C406		nsp	00MDK96104300	CER. CAP.	0.1UF 50V ZF	CCUS1H104ZF
INPUT	C407		nsp	00MOA10701620	ELECT CAP.	100UF 16V	CCEA1CH101T
INPUT	C408		nsp	00MDK96103300	CER. CAP.	0.01UF 50V KC	CCUS1H103KC
INPUT	C409		nsp	00MDK96103300	CER. CAP.	0.01UF 50V KC	CCUS1H103KC
INPUT	C410		nsp	00MDK96103300	CER. CAP.	0.01UF 50V KC	CCUS1H103KC
INPUT	C411		nsp	00MDK96103300	CER. CAP.	0.01UF 50V KC	CCUS1H103KC
INPUT	C412		nsp	00MOA10605020	ELECT CAP.	10UF 50V	CCEA1HH100T
INPUT	C413		nsp	00MOA10605020	ELECT CAP.	10UF 50V	CCEA1HH100T
INPUT	C414		nsp	00MDK96104300	CER. CAP.	0.1UF 50V ZF	CCUS1H104ZF
INPUT	C415		nsp	00MDK96104300	CER. CAP.	0.1UF 50V ZF	CCUS1H104ZF
INPUT	C416		nsp	00MOA10605020	ELECT CAP.	10UF 50V	CCEA1HH100T
INPUT	C417		nsp	00MOA10605020	ELECT CAP.	10UF 50V	CCEA1HH100T
INPUT	C418		nsp	00MDK96104300	CER. CAP.	0.1UF 50V ZF	CCUS1H104ZF
INPUT	C419		nsp	00MDK96104300	CER. CAP.	0.1UF 50V ZF	CCUS1H104ZF
INPUT	C420		nsp	00MOA10605020	ELECT CAP.	10UF 50V	CCEA1HH100T
INPUT	C421		nsp	00MOA10605020	ELECT CAP.	10UF 50V	CCEA1HH100T
INPUT	C422		nsp	00MDK96104300	CER. CAP.	0.1UF 50V ZF	CCUS1H104ZF
INPUT	C423		nsp	00MDK96104300	CER. CAP.	0.1UF 50V ZF	CCUS1H104ZF
INPUT	C424		nsp	00MOA10605020	ELECT CAP.	10UF 50V	CCEA1HH100T
INPUT	C425		nsp	00MOA10605020	ELECT CAP.	10UF 50V	CCEA1HH100T
INPUT	C426		nsp	00MDK96104300	CER. CAP.	0.1UF 50V ZF	CCUS1H104ZF
INPUT	C427		nsp	00MDK96104300	CER. CAP.	0.1UF 50V ZF	CCUS1H104ZF

NOTE : "nsp" PART IS LISTED FOR REFERENCE ONLY, MARANTZ WILL NOT SUPPLY THESE PARTS.

P.W.B. NAME	POS. NO.	VERS. COLOR	PART NO. (FOR EUR)	PART NO. (MZ)	PART NAME	DESCRIPTION	
INPUT	C428		nsp	00MDD95101300	CER. CAP.	100PF 50V JA	CCUS1H101JA
INPUT	C429		nsp	00MDD95101300	CER. CAP.	100PF 50V JA	CCUS1H101JA
INPUT	CN22		nsp	nsp	CONN.	15P WAFER	CJP15GA19ZY
INPUT	CN26		nsp	nsp	CONN.	15P WAFER	CJP15GA19ZY
INPUT	CN27		nsp	nsp	CONN.	17P WAFER CARD CABLE	CJP17GA115ZY
INPUT	CN28		nsp	nsp	CONN.	21P FPC WAFER	CJP21GA117ZY
INPUT	CN71		nsp	nsp	CONN.	00906-0027 4P STRAIGHT	CJP04GA19ZY
INPUT	CN72		nsp	nsp	CONN.	2PIN CJP02GA19ZY	CJP02GA19ZY
INPUT	D201		00MHZ21303210	00MHZ21303210	DIODE	1SS355	CVD1SS355T
INPUT	D202		00MHZ21303210	00MHZ21303210	DIODE	1SS355	CVD1SS355T
INPUT	D203		00MHZ21303210	00MHZ21303210	DIODE	1SS355	CVD1SS355T
INPUT	D205		00MHZ21303210	00MHZ21303210	DIODE	1SS355	CVD1SS355T
INPUT	D206		00MHZ21303210	00MHZ21303210	DIODE	1SS355	CVD1SS355T
INPUT	D207		00MHZ21303210	00MHZ21303210	DIODE	1SS355	CVD1SS355T
INPUT	D208		00MHZ21303210	00MHZ21303210	DIODE	1SS355	CVD1SS355T
INPUT	D209		00MHZ21303210	00MHZ21303210	DIODE	1SS355	CVD1SS355T
INPUT	D216		00MHZ21303210	00MHZ21303210	DIODE	1SS355	CVD1SS355T
INPUT	IC21		90M-HC109900R	90M-HC109900R	IC	TC94A46CFG	CVITC94A46CFG
INPUT	IC22		00MHC10466050	00MHC10466050	IC	TC9274CNG-016	CVITC9274CNG-016
INPUT	IC23		00MHC10102090	00MHC10102090	IC	NJM2068MD-TE1	HVINJM2068MDTE1
INPUT	IC24		00MHC10102090	00MHC10102090	IC	NJM2068MD-TE1	HVINJM2068MDTE1
INPUT	IC25		00MHC10102090	00MHC10102090	IC	NJM2068MD-TE1	HVINJM2068MDTE1
INPUT	IC26		00MHC10102090	00MHC10102090	IC	NJM2068MD-TE1	HVINJM2068MDTE1
INPUT	IC27		00MHC10102090	00MHC10102090	IC	NJM2068MD-TE1	HVINJM2068MDTE1
INPUT	IC28		00MHC10102090	00MHC10102090	IC	NJM2068MD-TE1	HVINJM2068MDTE1
INPUT	IC29		00MHC10102090	00MHC10102090	IC	NJM2068MD-TE1	HVINJM2068MDTE1
INPUT	IC32		00MHC10102090	00MHC10102090	IC	NJM2068MD-TE1	HVINJM2068MDTE1
INPUT	IC33		90M-HC109930R	90M-HC109930R	IC	TC9482BFG	HVITC9482BFG
INPUT	IC34		90M-HC109930R	90M-HC109930R	IC	TC9482BFG	HVITC9482BFG
INPUT	IC35		00MHC10102090	00MHC10102090	IC	NJM2068MD-TE1	HVINJM2068MDTE1
INPUT	IC36		00MHC10102090	00MHC10102090	IC	NJM2068MD-TE1	HVINJM2068MDTE1
INPUT	IC37		00MHC10102090	00MHC10102090	IC	NJM2068MD-TE1	HVINJM2068MDTE1
INPUT	IC38		00MHC10102090	00MHC10102090	IC	NJM2068MD-TE1	HVINJM2068MDTE1
INPUT	IC39		00MHC10102090	00MHC10102090	IC	NJM2068MD-TE1	HVINJM2068MDTE1
INPUT	IC40		00MHC10102090	00MHC10102090	IC	NJM2068MD-TE1	HVINJM2068MDTE1
INPUT	IC41		00MHC10102090	00MHC10102090	IC	NJM2068MD-TE1	HVINJM2068MDTE1
INPUT	IC42		00MHC10102090	00MHC10102090	IC	NJM2068MD-TE1	HVINJM2068MDTE1
INPUT	IC43		00MHC10102090	00MHC10102090	IC	NJM2068MD-TE1	HVINJM2068MDTE1
INPUT	IC44		00MHC10102090	00MHC10102090	IC	NJM2068MD-TE1	HVINJM2068MDTE1
INPUT	JK21		90M-YT003730R	90M-YT003730R	TERMINAL	CINCH 6PIN AUDIO GOLD	CJJ4R020Z
INPUT	JK22		90M-YT003730R	90M-YT003730R	TERMINAL	CINCH 6PIN AUDIO GOLD	CJJ4R020Z
INPUT	JK23		90M-YT003730R	90M-YT003730R	TERMINAL	CINCH 6PIN AUDIO GOLD	CJJ4R020Z
INPUT	JK24		90M-YT003730R	90M-YT003730R	TERMINAL	CINCH 6PIN AUDIO GOLD	CJJ4R020Z
INPUT	Q201		90M-HX800010R	90M-HX800010R	CHIP TRS.	KRC102S	CVTKRC102S
INPUT	Q203		90M-HX800010R	90M-HX800010R	CHIP TRS.	KRC102S	CVTKRC102S
INPUT	Q205		90M-HT300970R	90M-HT300970R	TRS.	KTC2875B	HVTKTC2875B
INPUT	Q206		90M-HT300970R	90M-HT300970R	TRS.	KTC2875B	HVTKTC2875B
INPUT	Q207		90M-HT300970R	90M-HT300970R	TRS.	KTC2875B	HVTKTC2875B
INPUT	Q208		90M-HT300970R	90M-HT300970R	TRS.	KTC2875B	HVTKTC2875B
INPUT	Q209		90M-HT300970R	90M-HT300970R	TRS.	KTC2875B	HVTKTC2875B
INPUT	Q210		90M-HT300970R	90M-HT300970R	TRS.	KTC2875B	HVTKTC2875B
INPUT	Q211		90M-HT300970R	90M-HT300970R	TRS.	KTC2875B	HVTKTC2875B
INPUT	Q212		90M-HT300970R	90M-HT300970R	TRS.	KTC2875B	HVTKTC2875B
INPUT	Q213		90M-HT300970R	90M-HT300970R	TRS.	KTC2875B	HVTKTC2875B
INPUT	Q214		90M-HT300970R	90M-HT300970R	TRS.	KTC2875B	HVTKTC2875B
INPUT	Q215		90M-HT300970R	90M-HT300970R	TRS.	KTC2875B	HVTKTC2875B
INPUT	Q216		90M-HT300970R	90M-HT300970R	TRS.	KTC2875B	HVTKTC2875B
INPUT	Q217		90M-HT300970R	90M-HT300970R	TRS.	KTC2875B	HVTKTC2875B
INPUT	Q218		90M-HT300970R	90M-HT300970R	TRS.	KTC2875B	HVTKTC2875B
INPUT	Q219		90M-HT300970R	90M-HT300970R	TRS.	KTC2875B	HVTKTC2875B
INPUT	Q220		90M-HT300970R	90M-HT300970R	TRS.	KTC2875B	HVTKTC2875B
INPUT	Q221		90M-HT300970R	90M-HT300970R	TRS.	KTC2875B	HVTKTC2875B
INPUT	Q222		90M-HT300970R	90M-HT300970R	TRS.	KTC2875B	HVTKTC2875B
INPUT	Q223		90M-HT300970R	90M-HT300970R	TRS.	KTC2875B	HVTKTC2875B
INPUT	Q224		90M-HT300970R	90M-HT300970R	TRS.	KTC2875B	HVTKTC2875B
INPUT	Q225		90M-HT300970R	90M-HT300970R	TRS.	KTC2875B	HVTKTC2875B
INPUT	Q226		90M-HT300970R	90M-HT300970R	TRS.	KTC2875B	HVTKTC2875B

NOTE : "nsp" PART IS LISTED FOR REFERENCE ONLY, MARANTZ WILL NOT SUPPLY THESE PARTS.

P.W.B. NAME	POS. NO.	VERS. COLOR	PART NO. (FOR EUR)	PART NO. (MZ)	PART NAME	DESCRIPTION	
INPUT	Q227		90M-HT300970R	90M-HT300970R	TRS.	KTC2875B	HVTKTC2875B
INPUT	Q228		90M-HT300970R	90M-HT300970R	TRS.	KTC2875B	HVTKTC2875B
INPUT	Q229		00D2690191903	00D2690191903	CHIP TRS.	KRA104S	CVTKRA104S
INPUT	Q230		00D2690191903	00D2690191903	CHIP TRS.	KRA104S	CVTKRA104S
INPUT	Q231		00D2690191903	00D2690191903	CHIP TRS.	KRA104S	CVTKRA104S
INPUT	Q232		00D2690191903	00D2690191903	CHIP TRS.	KRA104S	CVTKRA104S
INPUT	Q233		00D2690191903	00D2690191903	CHIP TRS.	KRA104S	CVTKRA104S
INPUT	Q234		00D2690191903	00D2690191903	CHIP TRS.	KRA104S	CVTKRA104S
INPUT	Q235		00D2690191903	00D2690191903	CHIP TRS.	KRA104S	CVTKRA104S
INPUT	Q236		00D2690193901	00D2690193901	CHIP TRS.	KRC104S	CVTKRC104S
INPUT	Q237		00D2690193901	00D2690193901	CHIP TRS.	KRC104S	CVTKRC104S
INPUT	Q238		00D2690193901	00D2690193901	CHIP TRS.	KRC104S	CVTKRC104S
INPUT	Q239		00D2690193901	00D2690193901	CHIP TRS.	KRC104S	CVTKRC104S
INPUT	Q240		00D2690193901	00D2690193901	CHIP TRS.	KRC104S	CVTKRC104S
INPUT	Q241		00D2690193901	00D2690193901	CHIP TRS.	KRC104S	CVTKRC104S
INPUT	Q242		00D2690193901	00D2690193901	CHIP TRS.	KRC104S	CVTKRC104S
INPUT	Q243		00D2690191903	00D2690191903	CHIP TRS.	KRA104S	CVTKRA104S
INPUT	Q244		00D2690193901	00D2690193901	CHIP TRS.	KRC104S	CVTKRC104S
INPUT	Q245		90M-HX800010R	90M-HX800010R	CHIP TRS.	KRC102S	CVTKRC102S
INPUT	R201		nsp	00MNN05101610	CHIP RES.	100 OHM 1/10W J	CRJ10DJ101T
INPUT	R202		nsp	00MNN05101610	CHIP RES.	100 OHM 1/10W J	CRJ10DJ101T
INPUT	R203		nsp	00MNN05101610	CHIP RES.	100 OHM 1/10W J	CRJ10DJ101T
INPUT	R204		nsp	00MNN05101610	CHIP RES.	100 OHM 1/10W J	CRJ10DJ101T
INPUT	R205		nsp	00MNN05101610	CHIP RES.	100 OHM 1/10W J	CRJ10DJ101T
INPUT	R206		nsp	00MNN05101610	CHIP RES.	100 OHM 1/10W J	CRJ10DJ101T
INPUT	R207		nsp	00MNN05102610	CHIP RES.	1K OHM 1/10W J	CRJ10DJ102T
INPUT	R208		nsp	00MNN05102610	CHIP RES.	1K OHM 1/10W J	CRJ10DJ102T
INPUT	R209		nsp	00MNN05101610	CHIP RES.	100 OHM 1/10W J	CRJ10DJ101T
INPUT	R210		nsp	00MNN05101610	CHIP RES.	100 OHM 1/10W J	CRJ10DJ101T
INPUT	R211		nsp	00MNN05102610	CHIP RES.	1K OHM 1/10W J	CRJ10DJ102T
INPUT	R212		nsp	00MNN05102610	CHIP RES.	1K OHM 1/10W J	CRJ10DJ102T
INPUT	R213		nsp	00MNN05101610	CHIP RES.	100 OHM 1/10W J	CRJ10DJ101T
INPUT	R214		nsp	00MNN05101610	CHIP RES.	100 OHM 1/10W J	CRJ10DJ101T
INPUT	R215		nsp	00MNN05102610	CHIP RES.	1K OHM 1/10W J	CRJ10DJ102T
INPUT	R216		nsp	00MNN05102610	CHIP RES.	1K OHM 1/10W J	CRJ10DJ102T
INPUT	R217		nsp	00MNN05101610	CHIP RES.	100 OHM 1/10W J	CRJ10DJ101T
INPUT	R218		nsp	00MNN05101610	CHIP RES.	100 OHM 1/10W J	CRJ10DJ101T
INPUT	R219		nsp	00MNN05102610	CHIP RES.	1K OHM 1/10W J	CRJ10DJ102T
INPUT	R220		nsp	00MNN05102610	CHIP RES.	1K OHM 1/10W J	CRJ10DJ102T
INPUT	R221		nsp	00MNN05102610	CHIP RES.	1K OHM 1/10W J	CRJ10DJ102T
INPUT	R222		nsp	00MNN05102610	CHIP RES.	1K OHM 1/10W J	CRJ10DJ102T
INPUT	R223		nsp	00MNN05102610	CHIP RES.	1K OHM 1/10W J	CRJ10DJ102T
INPUT	R224		nsp	00MNN05102610	CHIP RES.	1K OHM 1/10W J	CRJ10DJ102T
INPUT	R233		nsp	00MNN05832610	CHIP RES.	82K OHM 1/10W J	CRJ10DJ823T
INPUT	R234		nsp	00MNN05832610	CHIP RES.	82K OHM 1/10W J	CRJ10DJ823T
INPUT	R235		nsp	00MNN05832610	CHIP RES.	82K OHM 1/10W J	CRJ10DJ823T
INPUT	R236		nsp	00MNN05832610	CHIP RES.	82K OHM 1/10W J	CRJ10DJ823T
INPUT	R237		nsp	00MNN05832610	CHIP RES.	82K OHM 1/10W J	CRJ10DJ823T
INPUT	R238		nsp	00MNN05832610	CHIP RES.	82K OHM 1/10W J	CRJ10DJ823T
INPUT	R239		nsp	00MNN05473610	CHIP RES.	47K OHM 1/10W J	CRJ10DJ473T
INPUT	R240		nsp	00MNN05473610	CHIP RES.	47K OHM 1/10W J	CRJ10DJ473T
INPUT	R241		nsp	00MNN05832610	CHIP RES.	82K OHM 1/10W J	CRJ10DJ823T
INPUT	R242		nsp	00MNN05832610	CHIP RES.	82K OHM 1/10W J	CRJ10DJ823T
INPUT	R243		nsp	00MNN05473610	CHIP RES.	47K OHM 1/10W J	CRJ10DJ473T
INPUT	R244		nsp	00MNN05473610	CHIP RES.	47K OHM 1/10W J	CRJ10DJ473T
INPUT	R245		nsp	00MNN05832610	CHIP RES.	82K OHM 1/10W J	CRJ10DJ823T
INPUT	R246		nsp	00MNN05832610	CHIP RES.	82K OHM 1/10W J	CRJ10DJ823T
INPUT	R247		nsp	00MNN05473610	CHIP RES.	47K OHM 1/10W J	CRJ10DJ473T
INPUT	R248		nsp	00MNN05473610	CHIP RES.	47K OHM 1/10W J	CRJ10DJ473T
INPUT	R249		nsp	00MNN05832610	CHIP RES.	82K OHM 1/10W J	CRJ10DJ823T
INPUT	R250		nsp	00MNN05832610	CHIP RES.	82K OHM 1/10W J	CRJ10DJ823T
INPUT	R251		nsp	00MNN05473610	CHIP RES.	47K OHM 1/10W J	CRJ10DJ473T
INPUT	R252		nsp	00MNN05473610	CHIP RES.	47K OHM 1/10W J	CRJ10DJ473T
INPUT	R253		nsp	00MNN05473610	CHIP RES.	47K OHM 1/10W J	CRJ10DJ473T
INPUT	R254		nsp	00MNN05473610	CHIP RES.	47K OHM 1/10W J	CRJ10DJ473T
INPUT	R255		nsp	00MNN05473610	CHIP RES.	47K OHM 1/10W J	CRJ10DJ473T
INPUT	R256		nsp	00MNN05473610	CHIP RES.	47K OHM 1/10W J	CRJ10DJ473T

NOTE : "nsp" PART IS LISTED FOR REFERENCE ONLY, MARANTZ WILL NOT SUPPLY THESE PARTS.

P.W.B. NAME	POS. NO.	VERS. COLOR	PART NO. (FOR EUR)	PART NO. (MZ)	PART NAME	DESCRIPTION	
INPUT	R257		nsp	00MNN05473610	CHIP RES.	47K OHM 1/10W J	CRJ10DJ473T
INPUT	R258		nsp	00MNN05473610	CHIP RES.	47K OHM 1/10W J	CRJ10DJ473T
INPUT	R259		nsp	00MNN05473610	CHIP RES.	47K OHM 1/10W J	CRJ10DJ473T
INPUT	R260		nsp	00MNN05473610	CHIP RES.	47K OHM 1/10W J	CRJ10DJ473T
INPUT	R261		nsp	00MNN05473610	CHIP RES.	47K OHM 1/10W J	CRJ10DJ473T
INPUT	R262		nsp	00MNN05473610	CHIP RES.	47K OHM 1/10W J	CRJ10DJ473T
INPUT	R263		nsp	00MNN05473610	CHIP RES.	47K OHM 1/10W J	CRJ10DJ473T
INPUT	R264		nsp	00MNN05473610	CHIP RES.	47K OHM 1/10W J	CRJ10DJ473T
INPUT	R265		nsp	00MNN05473610	CHIP RES.	47K OHM 1/10W J	CRJ10DJ473T
INPUT	R266		nsp	00MNN05473610	CHIP RES.	47K OHM 1/10W J	CRJ10DJ473T
INPUT	R267		nsp	00MNN05473610	CHIP RES.	47K OHM 1/10W J	CRJ10DJ473T
INPUT	R268		nsp	00MNN05473610	CHIP RES.	47K OHM 1/10W J	CRJ10DJ473T
INPUT	R269		nsp	00MNN05473610	CHIP RES.	47K OHM 1/10W J	CRJ10DJ473T
INPUT	R270		nsp	00MNN05473610	CHIP RES.	47K OHM 1/10W J	CRJ10DJ473T
INPUT	R271		nsp	00MNN05473610	CHIP RES.	47K OHM 1/10W J	CRJ10DJ473T
INPUT	R272		nsp	00MNN05473610	CHIP RES.	47K OHM 1/10W J	CRJ10DJ473T
INPUT	R273		nsp	00MNN05224610	CHIP RES.	220K OHM 1/10W J	CRJ10DJ224T
INPUT	R274		nsp	00MNN05224610	CHIP RES.	220K OHM 1/10W J	CRJ10DJ224T
INPUT	R275		nsp	00MNN05473610	CHIP RES.	47K OHM 1/10W J	CRJ10DJ473T
INPUT	R276		nsp	00MNN05473610	CHIP RES.	47K OHM 1/10W J	CRJ10DJ473T
INPUT	R277		nsp	00MNN05104610	CHIP RES.	100K OHM 1/10W J	CRJ10DJ104T
INPUT	R278		nsp	00MNN05224610	CHIP RES.	220K OHM 1/10W J	CRJ10DJ224T
INPUT	R279		nsp	00MNN05224610	CHIP RES.	220K OHM 1/10W J	CRJ10DJ224T
INPUT	R280		nsp	00MNN05104610	CHIP RES.	100K OHM 1/10W J	CRJ10DJ104T
INPUT	R281		nsp	00MNN05104610	CHIP RES.	100K OHM 1/10W J	CRJ10DJ104T
INPUT	R282		nsp	00MNN05224610	CHIP RES.	220K OHM 1/10W J	CRJ10DJ224T
INPUT	R283		nsp	00MNN05224610	CHIP RES.	220K OHM 1/10W J	CRJ10DJ224T
INPUT	R284		nsp	00MNN05104610	CHIP RES.	100K OHM 1/10W J	CRJ10DJ104T
INPUT	R285		nsp	00MNN05104610	CHIP RES.	100K OHM 1/10W J	CRJ10DJ104T
INPUT	R286		nsp	00MNN05220610	CHIP RES.	22 OHM 1/10W J	CRJ10DJ220T
INPUT	R287		nsp	00MNN05220610	CHIP RES.	22 OHM 1/10W J	CRJ10DJ220T
INPUT	R288		nsp	00MNN05220610	CHIP RES.	22 OHM 1/10W J	CRJ10DJ220T
INPUT	R289		nsp	00MNN05220610	CHIP RES.	22 OHM 1/10W J	CRJ10DJ220T
INPUT	R290		nsp	00MNN05101610	CHIP RES.	100 OHM 1/10W J	CRJ10DJ101T
INPUT	R291		nsp	00MNN05101610	CHIP RES.	100 OHM 1/10W J	CRJ10DJ101T
INPUT	R292		nsp	00MNN05104610	CHIP RES.	100K OHM 1/10W J	CRJ10DJ104T
INPUT	R293		nsp	00MNN05104610	CHIP RES.	100K OHM 1/10W J	CRJ10DJ104T
INPUT	R294		nsp	00MNN05104610	CHIP RES.	100K OHM 1/10W J	CRJ10DJ104T
INPUT	R295		nsp	00MNN05104610	CHIP RES.	100K OHM 1/10W J	CRJ10DJ104T
INPUT	R296		nsp	00MNN05104610	CHIP RES.	100K OHM 1/10W J	CRJ10DJ104T
INPUT	R297		nsp	00MNN05104610	CHIP RES.	100K OHM 1/10W J	CRJ10DJ104T
INPUT	R298		nsp	00MNN05101610	CHIP RES.	100 OHM 1/10W J	CRJ10DJ101T
INPUT	R299		nsp	00MNN05104610	CHIP RES.	100K OHM 1/10W J	CRJ10DJ104T
INPUT	R300		nsp	00MNN05104610	CHIP RES.	100K OHM 1/10W J	CRJ10DJ104T
INPUT	R301		nsp	00MNN05104610	CHIP RES.	100K OHM 1/10W J	CRJ10DJ104T
INPUT	R302		nsp	00MNN05104610	CHIP RES.	100K OHM 1/10W J	CRJ10DJ104T
INPUT	R303		nsp	00MNN05104610	CHIP RES.	100K OHM 1/10W J	CRJ10DJ104T
INPUT	R305		nsp	00MNN05101610	CHIP RES.	100 OHM 1/10W J	CRJ10DJ101T
INPUT	R306		nsp	00MNN05473610	CHIP RES.	47K OHM 1/10W J	CRJ10DJ473T
INPUT	R307		nsp	00MNN05102610	CHIP RES.	1K OHM 1/10W J	CRJ10DJ102T
INPUT	R308		nsp	00MNN05473610	CHIP RES.	47K OHM 1/10W J	CRJ10DJ473T
INPUT	R309		nsp	00MNN05102610	CHIP RES.	1K OHM 1/10W J	CRJ10DJ102T
INPUT	R310		nsp	00MNN05822610	CHIP RES.	8.2K OHM 1/10W J	CRJ10DJ822T
INPUT	R311		nsp	00MNN05822610	CHIP RES.	8.2K OHM 1/10W J	CRJ10DJ822T
INPUT	R312		nsp	00MNN05473610	CHIP RES.	47K OHM 1/10W J	CRJ10DJ473T
INPUT	R313		nsp	00MNN05473610	CHIP RES.	47K OHM 1/10W J	CRJ10DJ473T
INPUT	R314		nsp	00MNN05221610	CHIP RES.	220 OHM 1/10W J	CRJ10DJ221T
INPUT	R315		nsp	00MNN05221610	CHIP RES.	220 OHM 1/10W J	CRJ10DJ221T
INPUT	R316		nsp	00MNN05105610	CHIP RES.	1M OHM 1/10W J	CRJ10DJ105T
INPUT	R317		nsp	00MNN05103610	CHIP RES.	10K OHM 1/10W J	CRJ10DJ103T
INPUT	R318		nsp	00MNN05103610	CHIP RES.	10K OHM 1/10W J	CRJ10DJ103T
INPUT	R319		nsp	00MNN05221610	CHIP RES.	220 OHM 1/10W J	CRJ10DJ221T
INPUT	R320		nsp	00MNN05221610	CHIP RES.	220 OHM 1/10W J	CRJ10DJ221T
INPUT	R321		nsp	00MNN05103610	CHIP RES.	10K OHM 1/10W J	CRJ10DJ103T
INPUT	R322		nsp	00MNN05103610	CHIP RES.	10K OHM 1/10W J	CRJ10DJ103T
INPUT	R323		nsp	00MNN05330610	CHIP RES.	33 OHM 1/10W J	CRJ10DJ330T
INPUT	R324		nsp	00MNN05330610	CHIP RES.	33 OHM 1/10W J	CRJ10DJ330T

NOTE : "nsp" PART IS LISTED FOR REFERENCE ONLY, MARANTZ WILL NOT SUPPLY THESE PARTS.

P.W.B. NAME	POS. NO.	VERS. COLOR	PART NO. (FOR EUR)	PART NO. (MZ)	PART NAME	DESCRIPTION	
INPUT	R325		nsp	00MNN05473610	CHIP RES.	47K OHM 1/10W J	CRJ10DJ473T
INPUT	R326		nsp	00MNN05102610	CHIP RES.	1K OHM 1/10W J	CRJ10DJ102T
INPUT	R327		nsp	00MNN05473610	CHIP RES.	47K OHM 1/10W J	CRJ10DJ473T
INPUT	R328		nsp	00MNN05102610	CHIP RES.	1K OHM 1/10W J	CRJ10DJ102T
INPUT	R329		nsp	00MNN05822610	CHIP RES.	8.2K OHM 1/10W J	CRJ10DJ822T
INPUT	R330		nsp	00MNN05822610	CHIP RES.	8.2K OHM 1/10W J	CRJ10DJ822T
INPUT	R331		nsp	00MNN05473610	CHIP RES.	47K OHM 1/10W J	CRJ10DJ473T
INPUT	R332		nsp	00MNN05473610	CHIP RES.	47K OHM 1/10W J	CRJ10DJ473T
INPUT	R333		nsp	00MNN05221610	CHIP RES.	220 OHM 1/10W J	CRJ10DJ221T
INPUT	R334		nsp	00MNN05221610	CHIP RES.	220 OHM 1/10W J	CRJ10DJ221T
INPUT	R335		nsp	00MNN05105610	CHIP RES.	1M OHM 1/10W J	CRJ10DJ105T
INPUT	R336		nsp	00MNN05103610	CHIP RES.	10K OHM 1/10W J	CRJ10DJ103T
INPUT	R337		nsp	00MNN05103610	CHIP RES.	10K OHM 1/10W J	CRJ10DJ103T
INPUT	R338		nsp	00MNN05221610	CHIP RES.	220 OHM 1/10W J	CRJ10DJ221T
INPUT	R339		nsp	00MNN05221610	CHIP RES.	220 OHM 1/10W J	CRJ10DJ221T
INPUT	R340		nsp	00MNN05103610	CHIP RES.	10K OHM 1/10W J	CRJ10DJ103T
INPUT	R341		nsp	00MNN05103610	CHIP RES.	10K OHM 1/10W J	CRJ10DJ103T
INPUT	R342		nsp	00MNN05330610	CHIP RES.	33 OHM 1/10W J	CRJ10DJ330T
INPUT	R343		nsp	00MNN05330610	CHIP RES.	33 OHM 1/10W J	CRJ10DJ330T
INPUT	R344		nsp	00MNN05473610	CHIP RES.	47K OHM 1/10W J	CRJ10DJ473T
INPUT	R345		nsp	00MNN05102610	CHIP RES.	1K OHM 1/10W J	CRJ10DJ102T
INPUT	R346		nsp	00MNN05102610	CHIP RES.	1K OHM 1/10W J	CRJ10DJ102T
INPUT	R347		nsp	00MNN05473610	CHIP RES.	47K OHM 1/10W J	CRJ10DJ473T
INPUT	R348		nsp	00MNN05822610	CHIP RES.	8.2K OHM 1/10W J	CRJ10DJ822T
INPUT	R349		nsp	00MNN05822610	CHIP RES.	8.2K OHM 1/10W J	CRJ10DJ822T
INPUT	R350		nsp	00MNN05473610	CHIP RES.	47K OHM 1/10W J	CRJ10DJ473T
INPUT	R351		nsp	00MNN05473610	CHIP RES.	47K OHM 1/10W J	CRJ10DJ473T
INPUT	R352		nsp	00MNN05221610	CHIP RES.	220 OHM 1/10W J	CRJ10DJ221T
INPUT	R353		nsp	00MNN05221610	CHIP RES.	220 OHM 1/10W J	CRJ10DJ221T
INPUT	R354		nsp	00MNN05105610	CHIP RES.	1M OHM 1/10W J	CRJ10DJ105T
INPUT	R355		nsp	00MNN05222610	CHIP RES.	2.2K OHM 1/10W J	CRJ10DJ222T
INPUT	R356		nsp	00MNN05103610	CHIP RES.	10K OHM 1/10W J	CRJ10DJ103T
INPUT	R357		nsp	00MNN05103610	CHIP RES.	10K OHM 1/10W J	CRJ10DJ103T
INPUT	R358		nsp	00MNN05221610	CHIP RES.	220 OHM 1/10W J	CRJ10DJ221T
INPUT	R359		nsp	00MNN05221610	CHIP RES.	220 OHM 1/10W J	CRJ10DJ221T
INPUT	R360		nsp	00MNN05103610	CHIP RES.	10K OHM 1/10W J	CRJ10DJ103T
INPUT	R361		nsp	00MNN05103610	CHIP RES.	10K OHM 1/10W J	CRJ10DJ103T
INPUT	R362		nsp	00MNN05330610	CHIP RES.	33 OHM 1/10W J	CRJ10DJ330T
INPUT	R363		nsp	00MNN05330610	CHIP RES.	33 OHM 1/10W J	CRJ10DJ330T
INPUT	R364		nsp	00MNN05473610	CHIP RES.	47K OHM 1/10W J	CRJ10DJ473T
INPUT	R365		nsp	00MNN05102610	CHIP RES.	1K OHM 1/10W J	CRJ10DJ102T
INPUT	R366		nsp	00MNN05104610	CHIP RES.	100K OHM 1/10W J	CRJ10DJ104T
INPUT	R367		nsp	00MNN05473610	CHIP RES.	47K OHM 1/10W J	CRJ10DJ473T
INPUT	R368		nsp	00MNN05102610	CHIP RES.	1K OHM 1/10W J	CRJ10DJ102T
INPUT	R369		nsp	00MNN05822610	CHIP RES.	8.2K OHM 1/10W J	CRJ10DJ822T
INPUT	R370		nsp	00MNN05822610	CHIP RES.	8.2K OHM 1/10W J	CRJ10DJ822T
INPUT	R371		nsp	00MNN05000610	CHIP RES.	0 OHM 1/10W J	CRJ10DJ0R0T
INPUT	R372		nsp	00MNN05473610	CHIP RES.	47K OHM 1/10W J	CRJ10DJ473T
INPUT	R373		nsp	00MNN05473610	CHIP RES.	47K OHM 1/10W J	CRJ10DJ473T
INPUT	R374		nsp	00MNN05221610	CHIP RES.	220 OHM 1/10W J	CRJ10DJ221T
INPUT	R375		nsp	00MNN05221610	CHIP RES.	220 OHM 1/10W J	CRJ10DJ221T
INPUT	R376		nsp	00MNN05105610	CHIP RES.	1M OHM 1/10W J	CRJ10DJ105T
INPUT	R377		nsp	00MNN05105610	CHIP RES.	1M OHM 1/10W J	CRJ10DJ105T
INPUT	R378		nsp	00MNN05103610	CHIP RES.	10K OHM 1/10W J	CRJ10DJ103T
INPUT	R379		nsp	00MNN05103610	CHIP RES.	10K OHM 1/10W J	CRJ10DJ103T
INPUT	R380		nsp	00MNN05221610	CHIP RES.	220 OHM 1/10W J	CRJ10DJ221T
INPUT	R381		nsp	00MNN05221610	CHIP RES.	220 OHM 1/10W J	CRJ10DJ221T
INPUT	R382		nsp	00MNN05103610	CHIP RES.	10K OHM 1/10W J	CRJ10DJ103T
INPUT	R383		nsp	00MNN05103610	CHIP RES.	10K OHM 1/10W J	CRJ10DJ103T
INPUT	R384		nsp	00MNN05330610	CHIP RES.	33 OHM 1/10W J	CRJ10DJ330T
INPUT	R385		nsp	00MNN05330610	CHIP RES.	33 OHM 1/10W J	CRJ10DJ330T
INPUT	R386		nsp	00MNN05473610	CHIP RES.	47K OHM 1/10W J	CRJ10DJ473T
INPUT	R387		nsp	00MNN05102610	CHIP RES.	1K OHM 1/10W J	CRJ10DJ102T
INPUT	R388		nsp	00MNN05473610	CHIP RES.	47K OHM 1/10W J	CRJ10DJ473T
INPUT	R389		nsp	00MNN05102610	CHIP RES.	1K OHM 1/10W J	CRJ10DJ102T
INPUT	R390		nsp	00MNN05822610	CHIP RES.	8.2K OHM 1/10W J	CRJ10DJ822T
INPUT	R391		nsp	00MNN05822610	CHIP RES.	8.2K OHM 1/10W J	CRJ10DJ822T

NOTE : "nsp" PART IS LISTED FOR REFERENCE ONLY, MARANTZ WILL NOT SUPPLY THESE PARTS.

P.W.B. NAME	POS. NO.	VERS. COLOR	PART NO. (FOR EUR)	PART NO. (MZ)	PART NAME	DESCRIPTION	
INPUT	R392		nsp	00MNN05473610	CHIP RES.	47K OHM 1/10W J	CRJ10DJ473T
INPUT	R393		nsp	00MNN05473610	CHIP RES.	47K OHM 1/10W J	CRJ10DJ473T
INPUT	R394		nsp	00MNN05221610	CHIP RES.	220 OHM 1/10W J	CRJ10DJ221T
INPUT	R395		nsp	00MNN05221610	CHIP RES.	220 OHM 1/10W J	CRJ10DJ221T
INPUT	R396		nsp	00MNN05105610	CHIP RES.	1M OHM 1/10W J	CRJ10DJ105T
INPUT	R397		nsp	00MNN05103610	CHIP RES.	10K OHM 1/10W J	CRJ10DJ103T
INPUT	R398		nsp	00MNN05103610	CHIP RES.	10K OHM 1/10W J	CRJ10DJ103T
INPUT	R399		nsp	00MNN05221610	CHIP RES.	220 OHM 1/10W J	CRJ10DJ221T
INPUT	R400		nsp	00MNN05221610	CHIP RES.	220 OHM 1/10W J	CRJ10DJ221T
INPUT	R401		nsp	00MNN05103610	CHIP RES.	10K OHM 1/10W J	CRJ10DJ103T
INPUT	R402		nsp	00MNN05103610	CHIP RES.	10K OHM 1/10W J	CRJ10DJ103T
INPUT	R403		nsp	00MNN05330610	CHIP RES.	33 OHM 1/10W J	CRJ10DJ330T
INPUT	R404		nsp	00MNN05330610	CHIP RES.	33 OHM 1/10W J	CRJ10DJ330T
INPUT	R405		nsp	00MNN05473610	CHIP RES.	47K OHM 1/10W J	CRJ10DJ473T
INPUT	R406		nsp	00MNN05102610	CHIP RES.	1K OHM 1/10W J	CRJ10DJ102T
INPUT	R407		nsp	00MNN05473610	CHIP RES.	47K OHM 1/10W J	CRJ10DJ473T
INPUT	R408		nsp	00MNN05102610	CHIP RES.	1K OHM 1/10W J	CRJ10DJ102T
INPUT	R409		nsp	00MNN05822610	CHIP RES.	8.2K OHM 1/10W J	CRJ10DJ822T
INPUT	R410		nsp	00MNN05822610	CHIP RES.	8.2K OHM 1/10W J	CRJ10DJ822T
INPUT	R411		nsp	00MNN05473610	CHIP RES.	47K OHM 1/10W J	CRJ10DJ473T
INPUT	R412		nsp	00MNN05473610	CHIP RES.	47K OHM 1/10W J	CRJ10DJ473T
INPUT	R413		nsp	00MNN05221610	CHIP RES.	220 OHM 1/10W J	CRJ10DJ221T
INPUT	R414		nsp	00MNN05221610	CHIP RES.	220 OHM 1/10W J	CRJ10DJ221T
INPUT	R415		nsp	00MNN05105610	CHIP RES.	1M OHM 1/10W J	CRJ10DJ105T
INPUT	R416		nsp	00MNN05103610	CHIP RES.	10K OHM 1/10W J	CRJ10DJ103T
INPUT	R417		nsp	00MNN05103610	CHIP RES.	10K OHM 1/10W J	CRJ10DJ103T
INPUT	R418		nsp	00MNN05221610	CHIP RES.	220 OHM 1/10W J	CRJ10DJ221T
INPUT	R419		nsp	00MNN05221610	CHIP RES.	220 OHM 1/10W J	CRJ10DJ221T
INPUT	R420		nsp	00MNN05103610	CHIP RES.	10K OHM 1/10W J	CRJ10DJ103T
INPUT	R421		nsp	00MNN05103610	CHIP RES.	10K OHM 1/10W J	CRJ10DJ103T
INPUT	R422		nsp	00MNN05330610	CHIP RES.	33 OHM 1/10W J	CRJ10DJ330T
INPUT	R423		nsp	00MNN05330610	CHIP RES.	33 OHM 1/10W J	CRJ10DJ330T
INPUT	R424		nsp	00MNN05100610	CHIP RES.	10 OHM 1/10W J	CRJ10DJ100T
INPUT	R425		nsp	00MNN05101610	CHIP RES.	100 OHM 1/10W J	CRJ10DJ101T
INPUT	R426		nsp	00MNN05101610	CHIP RES.	100 OHM 1/10W J	CRJ10DJ101T
INPUT	R427		nsp	00MNN05101610	CHIP RES.	100 OHM 1/10W J	CRJ10DJ101T
INPUT	R428		nsp	00MNN05101610	CHIP RES.	100 OHM 1/10W J	CRJ10DJ101T
INPUT	R429		nsp	00MNN05102610	CHIP RES.	1K OHM 1/10W J	CRJ10DJ102T
INPUT	R430		nsp	00MNN05224610	CHIP RES.	220K OHM 1/10W J	CRJ10DJ224T
INPUT	R431		nsp	00MNN05224610	CHIP RES.	220K OHM 1/10W J	CRJ10DJ224T
INPUT	R432		nsp	00MNN05224610	CHIP RES.	220K OHM 1/10W J	CRJ10DJ224T
INPUT	R433		nsp	00MNN05224610	CHIP RES.	220K OHM 1/10W J	CRJ10DJ224T
INPUT	R434		nsp	00MNN05224610	CHIP RES.	220K OHM 1/10W J	CRJ10DJ224T
INPUT	R435		nsp	00MNN05224610	CHIP RES.	220K OHM 1/10W J	CRJ10DJ224T
INPUT	R436		nsp	00MNN05224610	CHIP RES.	220K OHM 1/10W J	CRJ10DJ224T
INPUT	R437		nsp	00MNN05224610	CHIP RES.	220K OHM 1/10W J	CRJ10DJ224T
INPUT	R438		nsp	00MNN05101610	CHIP RES.	100 OHM 1/10W J	CRJ10DJ101T
INPUT	R439		nsp	00MNN05101610	CHIP RES.	100 OHM 1/10W J	CRJ10DJ101T
INPUT	R440		nsp	00MNN05101610	CHIP RES.	100 OHM 1/10W J	CRJ10DJ101T
INPUT	R441		nsp	00MNN05101610	CHIP RES.	100 OHM 1/10W J	CRJ10DJ101T
INPUT	RY90		90M-LY000430R	90M-LY000430R	RELAY	RELAY (BA1-5H)	CSL1C003ZU
INPUT	RY91		90M-LY000430R	90M-LY000430R	RELAY	RELAY (BA1-5H)	CSL1C003ZU
INPUT	RY92		90M-LY000380R	90M-LY000380R	RELAY	D3023	HSL4C008ZE
					PUSH S/W PWB (CUP11869Z-5)		
P SW	⚠ C877	/N1B	90M-DK100800R	90M-DK100800R	CER. CAP.	! DKS471ME	KCKDKS471ME
P SW	⚠ C877	/N1G	90M-DK100800R	90M-DK100800R	CER. CAP.	! DKS471ME	KCKDKS471ME
P SW	⚠ C877	/N1S	90M-DK100800R	90M-DK100800R	CER. CAP.	! DKS471ME	KCKDKS471ME
P SW	CN88	/N1B	nsp	nsp	CONN.	2P WAFER	CJP02GA89ZY
P SW	CN88	/N1G	nsp	nsp	CONN.	2P WAFER	CJP02GA89ZY
P SW	CN88	/N1S	nsp	nsp	CONN.	2P WAFER	CJP02GA89ZY
P SW	⚠ SW97	/N1B	90M-SP001250R	90M-SP001250R	SW	! JPP1197CSA64	KSH1A001ZV
P SW	⚠ SW97	/N1G	90M-SP001250R	90M-SP001250R	SW	! JPP1197CSA64	KSH1A001ZV
P SW	⚠ SW97	/N1S	90M-SP001250R	90M-SP001250R	SW	! JPP1197CSA64	KSH1A001ZV
					POWER PWB (CUP11873Z)		
POWER	BK10		nsp	nsp	BRACKET	BRACKET PWB	CMD1A387
POWER	BN65		nsp	nsp	CORD	WIRE ASSY	CWB3F006150UZ
POWER	BN81		nsp	nsp	CORD	WIRE ASSY	CWB1B906200EN

NOTE : "nsp" PART IS LISTED FOR REFERENCE ONLY, MARANTZ WILL NOT SUPPLY THESE PARTS.

P.W.B. NAME	POS. NO.	VERS. COLOR	PART NO. (FOR EUR)	PART NO. (MZ)	PART NAME	DESCRIPTION	
POWER	BN82		nsp	nsp	CORD	WIRE ASSY	CWZSR7001BN82
POWER	C601		90M-OF100370R	90M-OF100370R	FILM CAP.	0.022UF 50V J	HCQI1H223JZT
POWER	C602		90M-OF100370R	90M-OF100370R	FILM CAP.	0.022UF 50V J	HCQI1H223JZT
POWER	C603		90M-OF100370R	90M-OF100370R	FILM CAP.	0.022UF 50V J	HCQI1H223JZT
POWER	C604		90M-OF100370R	90M-OF100370R	FILM CAP.	0.022UF 50V J	HCQI1H223JZT
POWER	C605		90M-OF100370R	90M-OF100370R	FILM CAP.	0.022UF 50V J	HCQI1H223JZT
POWER	C606		90M-OF100370R	90M-OF100370R	FILM CAP.	0.022UF 50V J	HCQI1H223JZT
POWER	C607		90M-OF100370R	90M-OF100370R	FILM CAP.	0.022UF 50V J	HCQI1H223JZT
POWER	C608		90M-OF100370R	90M-OF100370R	FILM CAP.	0.022UF 50V J	HCQI1H223JZT
POWER	C609		90M-OF100370R	90M-OF100370R	FILM CAP.	0.022UF 50V J	HCQI1H223JZT
POWER	C610		90M-OF100370R	90M-OF100370R	FILM CAP.	0.022UF 50V J	HCQI1H223JZT
POWER	C611		nsp	nsp	CER. CAP.	1000PF 50V KB	CCKT1H102KB
POWER	C612		nsp	nsp	CER. CAP.	1000PF 50V KB	CCKT1H102KB
POWER	C613		nsp	nsp	CER. CAP.	1000PF 50V KB	CCKT1H102KB
POWER	C614		nsp	nsp	CER. CAP.	1000PF 50V KB	CCKT1H102KB
POWER	C615		nsp	nsp	CER. CAP.	1000PF 50V KB	CCKT1H102KB
POWER	C616		nsp	nsp	CER. CAP.	1000PF 50V KB	CCKT1H102KB
POWER	C617		nsp	00MOA47602520	ELECT CAP.	47UF 25V	CCEA1EH470T
POWER	C618		nsp	nsp	CER. CAP.	1000PF 50V KB	CCKT1H102KB
POWER	C619		nsp	00MOA10710020	ELECT CAP.	100UF 100V	CCEA2AH101E
POWER	C620		nsp	nsp	CER. CAP.	0.01UF 50V Z	CCFT1H103ZF
POWER	C621		nsp	00MOA47605020	ELECT CAP.	47UF 50V	CCEA1HH470T
POWER	C622		nsp	00MOA47605020	ELECT CAP.	47UF 50V	CCEA1HH470T
POWER	C623		nsp	nsp	CER. CAP.	0.01UF 50V Z	CCFT1H103ZF
POWER	C625		nsp	nsp	FILM CAP.	0.1UF 50V ZF	CCFT1H104ZF
POWER	C626		nsp	nsp	FILM CAP.	0.1UF 50V ZF	CCFT1H104ZF
POWER	C627		nsp	nsp	FILM CAP.	0.1UF 50V ZF	CCFT1H104ZF
POWER	C628		nsp	nsp	FILM CAP.	0.1UF 50V ZF	CCFT1H104ZF
POWER	⚠ C629		90M-EB000030R	90M-EB000030R	ELECT CAP.	! ELNA LHO SERIES 71V 18000UF	CCET71VLHO183R
POWER	⚠ C630		90M-EB000030R	90M-EB000030R	ELECT CAP.	! ELNA LHO SERIES 71V 18000UF	CCET71VLHO183R
POWER	CN61		nsp	nsp	CONN.	STRAIGHT, 2PIN	CJP02GA01ZY
POWER	CN62		nsp	nsp	CONN.	STRAIGHT, 7PIN	CJP07GA01ZY
POWER	CN63		nsp	nsp	CONN.	5P WAFER YMW025-05R	CJP05GA01ZY
POWER	CN65		nsp	nsp	CONN.	16P WAFER	CJP16GA147ZY
POWER	CN66		nsp	nsp	CONN.	3P STRAIGHT	CJP03GA01ZY
POWER	CN67		nsp	nsp	CONN.	A3963WV2-5P (3.96MM)	CJP05GA148ZW
POWER	CN68		nsp	nsp	CONN.	A3963WV2-5P (3.96MM)	CJP05GA148ZW
POWER	CN69		90M-YJ003110R	90M-YJ003110R	CONN.	7P B TO B HOUSING	CJP07GB99ZY
POWER	CN90		nsp	nsp	CONN.	8P STRAIGHT	CJP08GA01ZY
POWER	CN92		nsp	nsp	CONN.	9P WAFER YMW025-09R	CJP09GA01ZY
POWER	D601		nsp	90M-HD201750R	DIODE	1N4003	CVD1N4003SRT
POWER	D602		nsp	90M-HD201750R	DIODE	1N4003	CVD1N4003SRT
POWER	D603		nsp	90M-HD201750R	DIODE	1N4003	CVD1N4003SRT
POWER	D604		nsp	90M-HD201750R	DIODE	1N4003	CVD1N4003SRT
POWER	D605		nsp	90M-HD201750R	DIODE	1N4003	CVD1N4003SRT
POWER	D606		nsp	90M-HD201750R	DIODE	1N4003	CVD1N4003SRT
POWER	D613		nsp	90M-HD201750R	DIODE	1N4003	CVD1N4003SRT
POWER	D614		90M-HD302360R	90M-HD302360R	ZENER DIODE	ZJ6.8B 1/2W	CVDZJ6.8BT
POWER	D615		90M-HD302400R	90M-HD302400R	ZENER DIODE	ZJ30BT	CVDZJ30BT
POWER	J590		nsp	nsp	CORD	SN95/PB5, 0.6	C3A206
POWER	J591		nsp	nsp	CORD	SN95/PB5, 0.6	C3A206
POWER	J592		nsp	nsp	CORD	SN95/PB5, 0.6	C3A206
POWER	J593		nsp	nsp	CORD	SN95/PB5, 0.6	C3A206
POWER	J594		nsp	nsp	CORD	SN95/PB5, 0.6	C3A206
POWER	J595		nsp	nsp	CORD	SN95/PB5, 0.6	C3A206
POWER	J596		nsp	nsp	CORD	SN95/PB5, 0.6	C3A206
POWER	J597		nsp	nsp	CORD	SN95/PB5, 0.6	C3A206
POWER	J598		nsp	nsp	CORD	SN95/PB5, 0.6	C3A206
POWER	J599		nsp	nsp	CORD	SN95/PB5, 0.6	C3A206
POWER	J600		nsp	nsp	CORD	SN95/PB5, 0.6	C3A206
POWER	J601		nsp	nsp	CORD	SN95/PB5, 0.6	C3A206
POWER	J602		nsp	nsp	CORD	SN95/PB5, 0.6	C3A206
POWER	J603		nsp	nsp	CORD	SN95/PB5, 0.6	C3A206
POWER	J604		nsp	nsp	CORD	SN95/PB5, 0.6	C3A206
POWER	J605		nsp	nsp	CORD	SN95/PB5, 0.6	C3A206
POWER	J606		nsp	nsp	CORD	SN95/PB5, 0.6	C3A206
POWER	J607		nsp	nsp	CORD	SN95/PB5, 0.6	C3A206

NOTE : "nsp" PART IS LISTED FOR REFERENCE ONLY, MARANTZ WILL NOT SUPPLY THESE PARTS.

P.W.B. NAME	POS. NO.	VERS. COLOR	PART NO. (FOR EUR)	PART NO. (MZ)	PART NAME	DESCRIPTION	
POWER	J608		nsp	nsp	CORD	SN95/PB5, 0.6	C3A206
POWER	J609		nsp	nsp	CORD	SN95/PB5, 0.6	C3A206
POWER	J610		nsp	nsp	CORD	SN95/PB5, 0.6	C3A206
POWER	J611		nsp	nsp	CORD	SN95/PB5, 0.6	C3A206
POWER	J612		nsp	nsp	CORD	SN95/PB5, 0.6	C3A206
POWER	J613		nsp	nsp	CORD	SN95/PB5, 0.6	C3A206
POWER	J614		nsp	nsp	CORD	SN95/PB5, 0.6	C3A206
POWER	J615		nsp	nsp	CORD	SN95/PB5, 0.6	C3A206
POWER	J616		nsp	nsp	CORD	SN95/PB5, 0.6	C3A206
POWER	J617		nsp	nsp	CORD	SN95/PB5, 0.6	C3A206
POWER	J618		nsp	nsp	CORD	SN95/PB5, 0.6	C3A206
POWER	J619		nsp	nsp	CORD	SN95/PB5, 0.6	C3A206
POWER	J620		nsp	nsp	CORD	SN95/PB5, 0.6	C3A206
POWER	J621		nsp	nsp	CORD	SN95/PB5, 0.6	C3A206
POWER	J622		nsp	nsp	CORD	SN95/PB5, 0.6	C3A206
POWER	J623		nsp	nsp	CORD	SN95/PB5, 0.6	C3A206
POWER	J624		nsp	nsp	CORD	SN95/PB5, 0.6	C3A206
POWER	J625		nsp	nsp	CORD	SN95/PB5, 0.6	C3A206
POWER	J626		nsp	nsp	CORD	SN95/PB5, 0.6	C3A206
POWER	J627		nsp	nsp	CORD	SN95/PB5, 0.6	C3A206
POWER	J628		nsp	nsp	CORD	SN95/PB5, 0.6	C3A206
POWER	J629		nsp	nsp	CORD	SN95/PB5, 0.6	C3A206
POWER	J630		nsp	nsp	CORD	SN95/PB5, 0.6	C3A206
POWER	J631		nsp	nsp	CORD	SN95/PB5, 0.6	C3A206
POWER	J632		nsp	nsp	CORD	SN95/PB5, 0.6	C3A206
POWER	J633		nsp	nsp	CORD	SN95/PB5, 0.6	C3A206
POWER	J634		nsp	nsp	CORD	SN95/PB5, 0.6	C3A206
POWER	J635		nsp	nsp	CORD	SN95/PB5, 0.6	C3A206
POWER	J636		nsp	nsp	CORD	SN95/PB5, 0.6	C3A206
POWER	J637		nsp	nsp	CORD	SN95/PB5, 0.6	C3A206
POWER	J638		nsp	nsp	CORD	SN95/PB5, 0.6	C3A206
POWER	J639		nsp	nsp	CORD	SN95/PB5, 0.6	C3A206
POWER	J640		nsp	nsp	CORD	SN95/PB5, 0.6	C3A206
POWER	J641		nsp	nsp	CORD	SN95/PB5, 0.6	C3A206
POWER	J642		nsp	nsp	CORD	SN95/PB5, 0.6	C3A206
POWER	J643		nsp	nsp	CORD	SN95/PB5, 0.6	C3A206
POWER	J644		nsp	nsp	CORD	SN95/PB5, 0.6	C3A206
POWER	J664		nsp	nsp	CORD	SN95/PB5, 0.6	C3A206
POWER	J665		nsp	nsp	CORD	SN95/PB5, 0.6	C3A206
POWER	J666		nsp	nsp	CORD	SN95/PB5, 0.6	C3A206
POWER	J667		nsp	nsp	CORD	SN95/PB5, 0.6	C3A206
POWER	J668		nsp	nsp	CORD	SN95/PB5, 0.6	C3A206
POWER	J669		nsp	nsp	CORD	SN95/PB5, 0.6	C3A206
POWER	J670		nsp	nsp	CORD	SN95/PB5, 0.6	C3A206
POWER	J671		nsp	nsp	CORD	SN95/PB5, 0.6	C3A206
POWER	J672		nsp	nsp	CORD	SN95/PB5, 0.6	C3A206
POWER	J673		nsp	nsp	CORD	SN95/PB5, 0.6	C3A206
POWER	J674		nsp	nsp	CORD	SN95/PB5, 0.6	C3A206
POWER	J675		nsp	nsp	CORD	SN95/PB5, 0.6	C3A206
POWER	J676		nsp	nsp	CORD	SN95/PB5, 0.6	C3A206
POWER	J677		nsp	nsp	CORD	SN95/PB5, 0.6	C3A206
POWER	J678		nsp	nsp	CORD	SN95/PB5, 0.6	C3A206
POWER	J679		nsp	nsp	CORD	SN95/PB5, 0.6	C3A206
POWER	J680		nsp	nsp	CORD	SN95/PB5, 0.6	C3A206
POWER	J681		nsp	nsp	CORD	SN95/PB5, 0.6	C3A206
POWER	J682		nsp	nsp	CORD	SN95/PB5, 0.6	C3A206
POWER	J683		nsp	nsp	CORD	SN95/PB5, 0.6	C3A206
POWER	J684		nsp	nsp	CORD	SN95/PB5, 0.6	C3A206
POWER	J685		nsp	nsp	CORD	SN95/PB5, 0.6	C3A206
POWER	J686		nsp	nsp	CORD	SN95/PB5, 0.6	C3A206
POWER	J687		nsp	nsp	CORD	SN95/PB5, 0.6	C3A206
POWER	J688		nsp	nsp	CORD	SN95/PB5, 0.6	C3A206
POWER	J689		nsp	nsp	CORD	SN95/PB5, 0.6	C3A206
POWER	J690		nsp	nsp	CORD	SN95/PB5, 0.6	C3A206
POWER	J691		nsp	nsp	CORD	SN95/PB5, 0.6	C3A206
POWER	J692		nsp	nsp	CORD	SN95/PB5, 0.6	C3A206
POWER	J693		nsp	nsp	CORD	SN95/PB5, 0.6	C3A206

NOTE : "nsp" PART IS LISTED FOR REFERENCE ONLY, MARANTZ WILL NOT SUPPLY THESE PARTS.

P.W.B. NAME	POS. NO.	VERS. COLOR	PART NO. (FOR EUR)	PART NO. (MZ)	PART NAME	DESCRIPTION	
POWER	J694		nsp	nsp	CORD	SN95/PB5, 0.6	C3A206
POWER	J695		nsp	nsp	CORD	SN95/PB5, 0.6	C3A206
POWER	J696		nsp	nsp	CORD	SN95/PB5, 0.6	C3A206
POWER	J697		nsp	nsp	CORD	SN95/PB5, 0.6	C3A206
POWER	J698		nsp	nsp	CORD	SN95/PB5, 0.6	C3A206
POWER	J699		nsp	nsp	CORD	SN95/PB5, 0.6	C3A206
POWER	JK61		90M-YT003520R	90M-YT003520R	TERMINAL	4P SPEAKER TERMINAL FL FR	CJJ5P020Z
POWER	JK62		90M-YT003520R	90M-YT003520R	TERMINAL	4P SPEAKER TERMINAL FL FR	CJJ5P020Z
POWER	JK63		90M-YT003530R	90M-YT003530R	TERMINAL	6P SPEAKER TERMINAL CNT SL SR	CJJ5R006Z
POWER	JW10		nsp	nsp	CORD	WIRE ASSY	CWE8102100RV
POWER	JW20		nsp	nsp	CORD	WIRE ASSY	CWE8102150RV
POWER	Q601		00MHT600111B0	00MHT600111B0	TRS.	KTA1267Y	HVTKTA1267YT
POWER	Q602		00MHT600111B0	00MHT600111B0	TRS.	KTA1267Y	HVTKTA1267YT
POWER	Q603		00MHT600111B0	00MHT600111B0	TRS.	KTA1267Y	HVTKTA1267YT
POWER	Q604		00MHT600111B0	00MHT600111B0	TRS.	KTA1267Y	HVTKTA1267YT
POWER	Q605		00MHT600111B0	00MHT600111B0	TRS.	KTA1267Y	HVTKTA1267YT
POWER	Q606		00MBA20001000	00MBA20001000	TRS.	KRC102M	HVTKRC102MT
POWER	Q607		00MBA20001000	00MBA20001000	TRS.	KRC102M	HVTKRC102MT
POWER	Q608		00MBA20001000	00MBA20001000	TRS.	KRC102M	HVTKRC102MT
POWER	Q609		00MBA20001000	00MBA20001000	TRS.	KRC102M	HVTKRC102MT
POWER	Q610		00MBA20001000	00MBA20001000	TRS.	KRC102M	HVTKRC102MT
POWER	Q612		00MHT600111B0	00MHT600111B0	TRS.	KTA1267Y	HVTKTA1267YT
POWER	Q613		90M-HT800050R	90M-HT800050R	TRS.	KTC3198Y	HVTKTC3198YT
POWER	Q614		90M-HT800050R	90M-HT800050R	TRS.	KTC3198Y	HVTKTC3198YT
POWER	Q615		00MHT600111B0	00MHT600111B0	TRS.	KTA1267Y	HVTKTA1267YT
POWER	Q616		00MHT600141B0	00MHT600141B0	TRS.	KTA1271Y	HVTKTA1271YT
POWER	R601		nsp	nsp	RES.	10 OHM 1W J	KRG1SANJ100RT
POWER	R602		nsp	nsp	RES.	10 OHM 1W J	KRG1SANJ100RT
POWER	R603		nsp	nsp	RES.	10 OHM 1W J	KRG1SANJ100RT
POWER	R604		nsp	nsp	RES.	10 OHM 1W J	KRG1SANJ100RT
POWER	R605		nsp	nsp	RES.	10 OHM 1W J	KRG1SANJ100RT
POWER	R606		nsp	nsp	RES.	390 OHM 1W J	KRG1SANJ391RT
POWER	R607		nsp	nsp	RES.	390 OHM 1W J	KRG1SANJ391RT
POWER	R608		nsp	nsp	RES.	390 OHM 1W J	KRG1SANJ391RT
POWER	R609		nsp	nsp	RES.	390 OHM 1W J	KRG1SANJ391RT
POWER	R610		nsp	nsp	RES.	390 OHM 1W J	KRG1SANJ391RT
POWER	R611		nsp	nsp	RES.	470 OHM 1W J	KRG1SANJ471RT
POWER	R612		nsp	nsp	RES.	470 OHM 1W J	KRG1SANJ471RT
POWER	R613		nsp	nsp	RES.	470 OHM 1W J	KRG1SANJ471RT
POWER	R614		nsp	nsp	RES.	470 OHM 1W J	KRG1SANJ471RT
POWER	R615		nsp	nsp	RES.	470 OHM 1W J	KRG1SANJ471RT
POWER	R616		nsp	nsp	RES.	270 OHM 1W J	KRG1SANJ271RT
POWER	R617		nsp	nsp	RES.	270 OHM 1W J	KRG1SANJ271RT
POWER	R618		nsp	nsp	RES.	10K OHM 1/5W J	CRD20TJ103T
POWER	R619		nsp	nsp	RES.	10K OHM 1/5W J	CRD20TJ103T
POWER	R620		nsp	nsp	RES.	10K OHM 1/5W J	CRD20TJ103T
POWER	R621		nsp	nsp	RES.	10K OHM 1/5W J	CRD20TJ103T
POWER	R622		nsp	nsp	RES.	10K OHM 1/5W J	CRD20TJ103T
POWER	R623		nsp	nsp	RES.	10K OHM 1/5W J	CRD20TJ103T
POWER	R624		nsp	nsp	RES.	10K OHM 1/5W J	CRD20TJ103T
POWER	R625		nsp	nsp	RES.	10K OHM 1/5W J	CRD20TJ103T
POWER	R626		nsp	nsp	RES.	10K OHM 1/5W J	CRD20TJ103T
POWER	R627		nsp	nsp	RES.	10K OHM 1/5W J	CRD20TJ103T
POWER	R628		nsp	nsp	RES.	10K OHM 1/5W J	CRD20TJ103T
POWER	R629		nsp	nsp	RES.	10K OHM 1/5W J	CRD20TJ103T
POWER	R630		nsp	nsp	RES.	330 OHM 1W	CRG1ANJ331H
POWER	R631		nsp	nsp	RES.	330 OHM 1W	CRG1ANJ331H
POWER	R632		nsp	nsp	RES.	33K OHM 1/5W J	CRD20TJ333T
POWER	R633		nsp	nsp	RES.	100K OHM 1/5W J	CRD20TJ104T
POWER	R634		nsp	nsp	RES.	15K OHM 1/5W J	CRD20TJ153T
POWER	R635		nsp	nsp	RES.	15K OHM 1/5W J	CRD20TJ153T
POWER	R636		nsp	nsp	RES.	15K OHM 1/5W J	CRD20TJ153T
POWER	R637		nsp	nsp	RES.	15K OHM 1/5W J	CRD20TJ153T
POWER	R638		nsp	nsp	RES.	10K OHM 1/5W J	CRD20TJ103T
POWER	R639		nsp	nsp	RES.	1 OHM 1/4W J	CRD25TJ1R0T
POWER	R640		nsp	nsp	RES.	2.2K OHM 1W J	KRG1SANJ222RT
POWER	R641		nsp	nsp	RES.	2.2K OHM 1W J	KRG1SANJ222RT

NOTE : "nsp" PART IS LISTED FOR REFERENCE ONLY, MARANTZ WILL NOT SUPPLY THESE PARTS.

P.W.B. NAME	POS. NO.	VERS. COLOR	PART NO. (FOR EUR)	PART NO. (MZ)	PART NAME	DESCRIPTION	
POWER	R642		nsp	nsp	RES.	100 OHM 1/4W J	CRD25TJ101T
POWER	R643		nsp	nsp	RES.	100 OHM 1/4W J	CRD25TJ101T
POWER	R644		nsp	nsp	RES.	47K OHM 1/5W J	CRD20TJ473T
POWER	R645		nsp	nsp	RES.	1.2K OHM 1/5W J	CRD20TJ122T
POWER	RY61		00MLY20240510	00MLY20240510	RELAY	OSA-SS-224DM3	HSL4B017ZU
POWER	RY62		00MLY20240490	00MLY20240490	RELAY	5GPA-28 DC24	HSL3B013ZE
POWER	RY63		00MLY20240490	00MLY20240490	RELAY	5GPA-28 DC24	HSL3B013ZE
POWER	RY64		00MLY20240490	00MLY20240490	RELAY	5GPA-28 DC24	HSL3B013ZE
POWER	RY65		00MLY20240490	00MLY20240490	RELAY	5GPA-28 DC24	HSL3B013ZE
POWER	⚠ RY66		00MLY20240520	00MLY20240520	RELAY	! PCLH-203D1SP	HSL4B018ZU
					REGULATOR PWB (CUP11876Z)		
REG	BN61		nsp	nsp	CORD	WIRE ASSY	CWB1D902150BM
REG	BN91		nsp	nsp	CORD	WIRE ASSY	CWB1D908180BM
REG	BN92		nsp	nsp	CORD	WIRE ASSY	CWB1D909200BM
REG	BN94		nsp	nsp	CORD	WIRE ASSY	CWB1D908670BM
REG	BN97		nsp	nsp	CORD	WIRE ASSY	CWB1B003050NN
REG	C903		00MEA10901670	00MEA10901670	ELECT CAP.	10000UF 16V	CCEA1CH103E
REG	C904		nsp	nsp	FILM CAP.	0.1UF 50V ZF	CCFT1H104ZF
REG	C905		nsp	nsp	FILM CAP.	0.1UF 50V ZF	CCFT1H104ZF
REG	C906		nsp	00MOA10702520	ELECT CAP.	100UF 25V	CCEA1EH101T
REG	C907		00MEA10901670	00MEA10901670	ELECT CAP.	10000UF 16V	CCEA1CH103E
REG	C908		nsp	nsp	FILM CAP.	0.1UF 50V ZF	CCFT1H104ZF
REG	C909		nsp	nsp	FILM CAP.	0.1UF 50V ZF	CCFT1H104ZF
REG	C910		nsp	00MOA10702520	ELECT CAP.	100UF 25V	CCEA1EH101T
REG	C911		90M-EA001180R	90M-EA001180R	ELECT CAP.	10000UF 35V	CCET35VKL5103NK
REG	C912		nsp	nsp	CER. CAP.	0.01UF 50V Z	CCFT1H103ZF
REG	C913		nsp	nsp	CER. CAP.	0.01UF 50V Z	CCFT1H103ZF
REG	C914		nsp	00MOA10702520	ELECT CAP.	100UF 25V	CCEA1EH101T
REG	C915		90M-EA001190R	90M-EA001190R	ELECT CAP.	6800UF 35V	CCET35VKL5682NK
REG	C916		nsp	nsp	CER. CAP.	0.01UF 50V Z	CCFT1H103ZF
REG	C917		nsp	nsp	CER. CAP.	0.01UF 50V Z	CCFT1H103ZF
REG	C918		nsp	00MOA10702520	ELECT CAP.	100UF 25V	CCEA1EH101T
REG	CN92		00MYP04000760	00MYP04000760	CONN.	7.92MM(YUNHO)	CJP02KA060ZY
REG	CN93		nsp	nsp	CONN.	8P STRAIGHT	CJP08GA01ZY
REG	CN95		nsp	nsp	CONN.	6P STRAIGHT	CJP06GA19ZY
REG	CN96		nsp	nsp	CONN.	5P STRAIGHT	CJP05GA19ZY
REG	⚠ D902		90M-HE200330R	90M-HE200330R	DIODE	! BU804F	HVDKBU804F
REG	⚠ D905		90M-HE200330R	90M-HE200330R	DIODE	! BU804F	HVDKBU804F
REG	D906		nsp	90M-HD201750R	DIODE	1N4003	CVD1N4003SRT
REG	D907		nsp	90M-HD201750R	DIODE	1N4003	CVD1N4003SRT
REG	ET10		nsp	nsp	TERMINAL	EARTH PLATE	CNE75
REG	⚠ F901		90M-FS001450R	90M-FS001450R	FUSE	! T 5A 250V LITTLE FUSE 382	KBA2D5000A2EYT
REG	⚠ F902		90M-FS001450R	90M-FS001450R	FUSE	! T 5A 250V LITTLE FUSE 382	KBA2D5000A2EYT
REG	IC91		90M-HC300750R	90M-HC300750R	IC	KIA378R05PI	HVIKIA378R05PI
REG	IC92		90M-HC300750R	90M-HC300750R	IC	KIA378R05PI	HVIKIA378R05PI
REG	IC93		00MHC3891509F	00MHC3891509F	IC	NJM7815FA	HVINJM7815FA
REG	IC94		00MHC3991509F	00MHC3991509F	IC	NJM7915FA	HVINJM7915FA
REG	J900		nsp	nsp	CORD	SN95/PB5, 0.6	C3A206
REG	J901		nsp	nsp	CORD	SN95/PB5, 0.6	C3A206
REG	J902		nsp	nsp	CORD	SN95/PB5, 0.6	C3A206
REG	J903		nsp	nsp	CORD	SN95/PB5, 0.6	C3A206
REG	J904		nsp	nsp	CORD	SN95/PB5, 0.6	C3A206
REG	J905		nsp	nsp	CORD	SN95/PB5, 0.6	C3A206
REG	J906		nsp	nsp	CORD	SN95/PB5, 0.6	C3A206
REG	J907		nsp	nsp	CORD	SN95/PB5, 0.6	C3A206
REG	J908		nsp	nsp	CORD	SN95/PB5, 0.6	C3A206
REG	J909		nsp	nsp	CORD	SN95/PB5, 0.6	C3A206
REG	J910		nsp	nsp	CORD	SN95/PB5, 0.6	C3A206
REG	J911		nsp	nsp	CORD	SN95/PB5, 0.6	C3A206
REG	J912		nsp	nsp	CORD	SN95/PB5, 0.6	C3A206
REG	J913		nsp	nsp	CORD	SN95/PB5, 0.6	C3A206
REG	J914		nsp	nsp	CORD	SN95/PB5, 0.6	C3A206
REG	J915		nsp	nsp	CORD	SN95/PB5, 0.6	C3A206
REG	J916		nsp	nsp	CORD	SN95/PB5, 0.6	C3A206
REG	J917		nsp	nsp	CORD	SN95/PB5, 0.6	C3A206
REG	J918		nsp	nsp	CORD	SN95/PB5, 0.6	C3A206
REG	J920		nsp	nsp	CORD	SN95/PB5, 0.6	C3A206

NOTE : "nsp" PART IS LISTED FOR REFERENCE ONLY, MARANTZ WILL NOT SUPPLY THESE PARTS.

P.W.B. NAME	POS. NO.	VERS. COLOR	PART NO. (FOR EUR)	PART NO. (MZ)	PART NAME	DESCRIPTION	
REG	J921		nsp	nsp	CORD	SN95/PB5, 0.6	C3A206
REG	J922		nsp	nsp	CORD	SN95/PB5, 0.6	C3A206
REG	J923		nsp	nsp	CORD	SN95/PB5, 0.6	C3A206
REG	J924		nsp	nsp	CORD	SN95/PB5, 0.6	C3A206
REG	J925		nsp	nsp	CORD	SN95/PB5, 0.6	C3A206
REG	J926		nsp	nsp	CORD	SN95/PB5, 0.6	C3A206
REG	⚠ R903		90M-NH000080R	90M-NH000080R	FUSE RES.	! 0.47 OHM 1W J	KRQ1AJR47H
REG	⚠ R904		90M-NH000080R	90M-NH000080R	FUSE RES.	! 0.47 OHM 1W J	KRQ1AJR47H
REG	R906		nsp	nsp	RES.	22K OHM 1/5W J	CRD20TJ223T
REG	R907		nsp	nsp	RES.	22K OHM 1/5W J	CRD20TJ223T
REG	R908		nsp	nsp	RES.	10K OHM 1/5W J	CRD20TJ103T
REG	R909		nsp	nsp	RES.	100K OHM 1/5W J	CRD20TJ104T
REG	R910		nsp	nsp	RES.	100K OHM 1/5W J	CRD20TJ104T
REG	TH81		90M-HP000080R	90M-HP000080R	VARISTOR	PTFM04BD222Q2N34B0	BRTPTFM04BD222Q
					RS-232C PWB (CUP11874Z-3)		
RS232	BK91		nsp	nsp	BRACKET	BRACKET FOR PWB	CMD1A569
RS232	C901		nsp	nsp	CER. CAP.	0.1UF 50V Z	HCBS1H104ZFT
RS232	C902		nsp	nsp	CER. CAP.	0.1UF 50V Z	HCBS1H104ZFT
RS232	C903		nsp	nsp	CER. CAP.	0.1UF 50V Z	HCBS1H104ZFT
RS232	C904		nsp	nsp	CER. CAP.	0.1UF 50V Z	HCBS1H104ZFT
RS232	C905		nsp	nsp	CER. CAP.	0.1UF 50V Z	HCBS1H104ZFT
RS232	CN90		nsp	nsp	CONN.	00906-0027 4P STRAIGHT	CJP04GA19ZY
RS232	J901		nsp	nsp	CORD	SN95/PB5, 0.6	C3A206
RS232	J902		nsp	nsp	CORD	SN95/PB5, 0.6	C3A206
RS232	JK90		90M-YT005040R	90M-YT005040R	TERMINAL	9P D-SUB MALE (RS-232C) SEMCO	CJJ9V001Z
					SBLR SPEAKER PWB (CUP11874Z-2)		
SBLR	BK81		nsp	nsp	BRACKET	BRACKET FOR PWB	CMD1A569
SBLR	C810		90M-OF100370R	90M-OF100370R	FILM CAP.	0.022UF 50V J	HCQI1H223JZT
SBLR	C811		90M-OF100370R	90M-OF100370R	FILM CAP.	0.022UF 50V J	HCQI1H223JZT
SBLR	C812		90M-OF100370R	90M-OF100370R	FILM CAP.	0.022UF 50V J	HCQI1H223JZT
SBLR	C813		90M-OF100370R	90M-OF100370R	FILM CAP.	0.022UF 50V J	HCQI1H223JZT
SBLR	C814		nsp	nsp	CER. CAP.	1000PF 50V KB	CCKT1H102KB
SBLR	C815		nsp	nsp	CER. CAP.	1000PF 50V KB	CCKT1H102KB
SBLR	C816		nsp	nsp	CER. CAP.	0.1UF 50V Z	HCBS1H104ZFT
SBLR	C817		nsp	nsp	CER. CAP.	0.1UF 50V Z	HCBS1H104ZFT
SBLR	CN81		nsp	nsp	CONN.	6P STRAIGHT	CJP06GA19ZY
SBLR	CN82		nsp	nsp	CONN.	2P WAFER	CJP02GA89ZY
SBLR	CN83		nsp	nsp	CONN.	2P WAFER	CJP02GA89ZY
SBLR	D801		nsp	90M-HD201750R	DIODE	1N4003	CVD1N4003SRT
SBLR	D802		nsp	90M-HD201750R	DIODE	1N4003	CVD1N4003SRT
SBLR	J800		nsp	nsp	CORD	SN95/PB5, 0.6	C3A206
SBLR	J800	/U1B	nsp	nsp	CORD	SN95/PB5, 0.6	C3A206
SBLR	J801		nsp	nsp	CORD	SN95/PB5, 0.6	C3A206
SBLR	J802		nsp	nsp	CORD	SN95/PB5, 0.6	C3A206
SBLR	J803		nsp	nsp	CORD	SN95/PB5, 0.6	C3A206
SBLR	J804		nsp	nsp	CORD	SN95/PB5, 0.6	C3A206
SBLR	J805		nsp	nsp	CORD	SN95/PB5, 0.6	C3A206
SBLR	J806		nsp	nsp	CORD	SN95/PB5, 0.6	C3A206
SBLR	J807		nsp	nsp	CORD	SN95/PB5, 0.6	C3A206
SBLR	J808		nsp	nsp	CORD	SN95/PB5, 0.6	C3A206
SBLR	JK80		90M-YT004020R	90M-YT004020R	TERMINAL	6P SPEAKER	CJJ5Q012Z
SBLR	Q801		00MHT600111B0	00MHT600111B0	TRS.	KTA1267Y	HVTKTA1267YT
SBLR	Q802		00MHT600111B0	00MHT600111B0	TRS.	KTA1267Y	HVTKTA1267YT
SBLR	Q803		00MBA20001000	00MBA20001000	TRS.	KRC102M	HVTKRC102MT
SBLR	Q804		00MBA20001000	00MBA20001000	TRS.	KRC102M	HVTKRC102MT
SBLR	R810		nsp	nsp	RES.	10 OHM 1W J	KRG1SANJ100RT
SBLR	R811		nsp	nsp	RES.	10 OHM 1W J	KRG1SANJ100RT
SBLR	R812		nsp	nsp	RES.	10K OHM 1/5W J	CRD20TJ103T
SBLR	R813		nsp	nsp	RES.	10K OHM 1/5W J	CRD20TJ103T
SBLR	R814		nsp	nsp	RES.	10K OHM 1/5W J	CRD20TJ103T
SBLR	R815		nsp	nsp	RES.	10K OHM 1/5W J	CRD20TJ103T
SBLR	R816		nsp	nsp	RES.	390 OHM 1W J	KRG1SANJ391RT
SBLR	R817		nsp	nsp	RES.	390 OHM 1W J	KRG1SANJ391RT
SBLR	R818		nsp	nsp	RES.	470 OHM 1W J	KRG1SANJ471RT
SBLR	R819		nsp	nsp	RES.	470 OHM 1W J	KRG1SANJ471RT
SBLR	RY81		00MLY20240490	00MLY20240490	RELAY	5GPA-28 DC24	HSL3B013ZE
SBLR	RY82		00MLY20240490	00MLY20240490	RELAY	5GPA-28 DC24	HSL3B013ZE

NOTE : "nsp" PART IS LISTED FOR REFERENCE ONLY, MARANTZ WILL NOT SUPPLY THESE PARTS.

P.W.B. NAME	POS. NO.	VERS. COLOR	PART NO. (FOR EUR)	PART NO. (MZ)	PART NAME	DESCRIPTION	
SBLR	SW81		90M-SS000710R	90M-SS000710R	SW	SLIDE SWITCH	KSS2B016Z
					SELECTOR ENCODER PWB (CUP11869Z-2)		
SEL/ENC	C841		nsp	nsp	CER. CAP.	0.1UF 50V Z	HCBS1H104ZFT
SEL/ENC	C851		nsp	nsp	CER. CAP.	0.1UF 50V Z	HCBS1H104ZFT
SEL/ENC	C871		nsp	nsp	CER. CAP.	100PF 50V K	HCBS1H101KBT
SEL/ENC	C872		nsp	nsp	CER. CAP.	100PF 50V K	HCBS1H101KBT
SEL/ENC	C873		nsp	nsp	CER. CAP.	100PF 50V K	HCBS1H101KBT
SEL/ENC	CN51		nsp	nsp	CONN.	9P STRAIGHT	CJP09GA19ZY
SEL/ENC	D801		90M-HI101090R	90M-HI101090R	L.E.D.	SPR-39MVW3 2COLOR	HVDSPR39MVW3
SEL/ENC	D806		90M-HI101190R	90M-HI101190R	L.E.D.	BLUE LED TOL-52CSBBCEAB2	CVD52CSBBCEAB2
SEL/ENC	EN82		90M-SR000270R	90M-SR000270R	ROTARY SW	EC16B12S0AD4ZZZ	HSR2A032Z
SEL/ENC	J847		nsp	nsp	CORD	SN95/PB5, 0.6	C3A206
SEL/ENC	J848		nsp	nsp	CORD	SN95/PB5, 0.6	C3A206
SEL/ENC	J849		nsp	nsp	CORD	SN95/PB5, 0.6	C3A206
SEL/ENC	J866		nsp	nsp	CORD	SN95/PB5, 0.6	C3A206
SEL/ENC	J867		nsp	nsp	CORD	SN95/PB5, 0.6	C3A206
SEL/ENC	JW13		nsp	nsp	CORD	WIRE ASSY	CWE8102140RV
SEL/ENC	Q806		00MBA10001000	00MBA10001000	TRS.	KRA102M	HVTKRA102MT
SEL/ENC	Q807		00MBA10001000	00MBA10001000	TRS.	KRA102M	HVTKRA102MT
SEL/ENC	Q812		00MBA10001000	00MBA10001000	TRS.	KRA102M	HVTKRA102MT
SEL/ENC	R852		nsp	nsp	RES.	220 OHM 1/5W J	CRD20TJ221T
SEL/ENC	R853		nsp	nsp	RES.	10K OHM 1/5W J	CRD20TJ103T
SEL/ENC	R865		nsp	nsp	RES.	270 OHM 1/5W J	CRD20TJ271T
SEL/ENC	R871		nsp	nsp	RES.	10K OHM 1/5W J	CRD20TJ103T
SEL/ENC	R872		nsp	nsp	RES.	10K OHM 1/5W J	CRD20TJ103T
SEL/ENC	R873		nsp	nsp	RES.	10K OHM 1/5W J	CRD20TJ103T
SEL/ENC	R874		nsp	nsp	RES.	10K OHM 1/5W J	CRD20TJ103T
SEL/ENC	R875		nsp	nsp	RES.	220 OHM 1/5W J	CRD20TJ221T
					STANDBY PWB (CUP11874Z)		
ST-BY	BK71		nsp	nsp	BRACKET	BRACKET FOR PWB (A)	CMD1A188
ST-BY	C781		nsp	nsp	CER. CAP.	0.1UF 50V Z	HCBS1H104ZFT
ST-BY	C782		nsp	00MOA47505020	ELECT CAP.	4.7UF 50V	CCEA1HH4R7T
ST-BY	C783		nsp	00MOA10701620	ELECT CAP.	100UF 16V	CCEA1CH101T
ST-BY	C784		nsp	nsp	CER. CAP.	0.1UF 50V Z	HCBS1H104ZFT
ST-BY	C785		nsp	nsp	CER. CAP.	0.1UF 50V Z	HCBS1H104ZFT
ST-BY	C786		nsp	00MOA33802520	ELECT CAP.	3300UF 25V	CCEA1EH332E
ST-BY	C787		nsp	00MOA10702520	ELECT CAP.	100UF 25V	CCEA1EH101T
ST-BY	C788		nsp	nsp	CER. CAP.	0.1UF 50V Z	HCBS1H104ZFT
ST-BY	C789		nsp	nsp	CER. CAP.	0.1UF 50V Z	HCBS1H104ZFT
ST-BY	C790		nsp	00MOA10803520	ELECT CAP.	1000UF 35V	CCEA1VH102E
ST-BY	C791		nsp	nsp	CER. CAP.	1000PF 50V KB	CCKT1H102KB
ST-BY	⚠ C792		90M-DK100810R	90M-DK100810R	CER. CAP.	! DE1610-610F103M JP (KH TYPE)	HCKWKH103MF
ST-BY	CN70		90M-YP100410R	90M-YP100410R	CONN.	PIN HEADER (7PIN)	CJP07GA98ZY
ST-BY	CN71	/N1B	nsp	nsp	CONN.	2P WAFER	CJP02GA89ZY
ST-BY	CN71	/N1G	nsp	nsp	CONN.	2P WAFER	CJP02GA89ZY
ST-BY	CN71	/N1S	nsp	nsp	CONN.	2P WAFER	CJP02GA89ZY
ST-BY	CN72		nsp	nsp	CONN.	2P WAFER	CJP02GA89ZY
ST-BY	CN73		nsp	nsp	CONN.	2P WAFER	CJP02GA89ZY
ST-BY	D702		nsp	00MHD20015210	DIODE	1SS133T-77	CVD1SS133MT
ST-BY	D704		nsp	90M-HD201750R	DIODE	1N4003	CVD1N4003SRT
ST-BY	D706		90M-HD302410R	90M-HD302410R	ZENER DIODE	ZJ8.2BT	CVDZJ8.2BT
ST-BY	D707		nsp	90M-HD201750R	DIODE	1N4003	CVD1N4003SRT
ST-BY	D708		nsp	90M-HD201750R	DIODE	1N4003	CVD1N4003SRT
ST-BY	D709		nsp	90M-HD201750R	DIODE	1N4003	CVD1N4003SRT
ST-BY	D710		nsp	90M-HD201750R	DIODE	1N4003	CVD1N4003SRT
ST-BY	D711		nsp	90M-HD201750R	DIODE	1N4003	CVD1N4003SRT
ST-BY	D712		nsp	90M-HD201750R	DIODE	1N4003	CVD1N4003SRT
ST-BY	D713		nsp	90M-HD201750R	DIODE	1N4003	CVD1N4003SRT
ST-BY	D714		nsp	90M-HD201750R	DIODE	1N4003	CVD1N4003SRT
ST-BY	D715		nsp	90M-HD201750R	DIODE	1N4003	CVD1N4003SRT
ST-BY	D716		nsp	90M-HD201750R	DIODE	1N4003	CVD1N4003SRT
ST-BY	D717		nsp	90M-HD201750R	DIODE	1N4003	CVD1N4003SRT
ST-BY	ET71		nsp	nsp	TERMINAL	EARTH PLATE	CNE75
ST-BY	F701	/N1B	90M-FS001090R	90M-FS001090R	FUSE	! 5A/250V(EUR) T5AL	KBA2C5000TLEY
ST-BY	F701	/N1G	90M-FS001090R	90M-FS001090R	FUSE	! 5A/250V(EUR) T5AL	KBA2C5000TLEY
ST-BY	⚠ F701	/N1S	90M-FS001090R	90M-FS001090R	FUSE	! 5A/250V(EUR) T5AL	KBA2C5000TLEY
ST-BY	⚠ F701	/U1B	nsp	90M-FS001080R	FUSE	! 10A/250V	KBA2C1002TLEY

NOTE : "nsp" PART IS LISTED FOR REFERENCE ONLY, MARANTZ WILL NOT SUPPLY THESE PARTS.

P.W.B. NAME	POS. NO.	VERS. COLOR	PART NO. (FOR EUR)	PART NO. (MZ)	PART NAME	DESCRIPTION	
ST-BY	F701		nsp	nsp	CONN.	HOLDER, FUSE	KJCFC5S
ST-BY	⚠ F702	/U1B	nsp	90M-FS001460R	FUSE	! T 3.15A L 250V LITTLE FUSE 382	KBA2D3150A2EYT
ST-BY	⚠ F703		90M-FS001460R	90M-FS001460R	FUSE	! T 3.15A L 250V LITTLE FUSE 382	KBA2D3150A2EYT
ST-BY	IC74		90M-HC108410R	90M-HC108410R	IC	S-80842CNY-X	HVIS-80842CNY-X
ST-BY	⚠ IC75		90M-HC300500R	90M-HC300500R	IC	! KA7805-ABTU	HVIMC7805C
ST-BY	⚠ IC76		90M-HC300520R	90M-HC300520R	IC	! KA7812-ABTU	HVIMC7812C
ST-BY	IC92		90M-HC109890R	90M-HC109890R	IC	ST3232ECWR	CVIST3232ECWR
ST-BY	J701		nsp	nsp	CORD	SN95/PB5, 0.6	C3A206
ST-BY	J702		nsp	nsp	CORD	SN95/PB5, 0.6	C3A206
ST-BY	J703		nsp	nsp	CORD	SN95/PB5, 0.6	C3A206
ST-BY	J704		nsp	nsp	CORD	SN95/PB5, 0.6	C3A206
ST-BY	J705	/U1B	nsp	nsp	CORD	SN95/PB5, 0.6	C3A206
ST-BY	J706		nsp	nsp	CORD	SN95/PB5, 0.6	C3A206
ST-BY	J707		nsp	nsp	CORD	SN95/PB5, 0.6	C3A206
ST-BY	J708		nsp	nsp	CORD	SN95/PB5, 0.6	C3A206
ST-BY	⚠ JK70	/U1B	nsp	90M-YT002410R	TERMINAL	! A204D0041P AC(UL/2P/SEP)	KJJ7A015Z
ST-BY	⚠ JK71	/N1B	90M-YT002430R	90M-YT002430R	TERMINAL	! A302D0061P AC(EUR/1P)	KJJ7A022Z
ST-BY	⚠ JK71	/N1G	90M-YT002430R	90M-YT002430R	TERMINAL	! A302D0061P AC(EUR/1P)	KJJ7A022Z
ST-BY	⚠ JK71	/N1S	90M-YT002430R	90M-YT002430R	TERMINAL	! A302D0061P AC(EUR/1P)	KJJ7A022Z
ST-BY	Q704		00MBA20001000	00MBA20001000	TRS.	KRC102M	HVTKRC102MT
ST-BY	Q705		00MHT600111B0	00MHT600111B0	TRS.	KTA1267Y	HVTKTA1267YT
ST-BY	R781		nsp	nsp	RES.	47K OHM 1/5W J	CRD20TJ473T
ST-BY	R782		nsp	nsp	RES.	10K OHM 1/5W J	CRD20TJ103T
ST-BY	R783		nsp	nsp	RES.	2.2K OHM 1/5W J	CRD20TJ222T
ST-BY	R786		nsp	nsp	RES.	1 OHM 1/5W J	CRD20TJ1R0T
ST-BY	⚠ R787	/U1B	nsp	90M-GG000010R	RES.	! 3.3M OHM 1/10W J	HRDERC12UGK335T
ST-BY	R788		nsp	nsp	RES.	4.7K OHM 1/5W J	CRD20TJ472T
ST-BY	R789		nsp	nsp	RES.	10K OHM 1/5W J	CRD20TJ103T
ST-BY	⚠ RY701		00MLY10090010	00MLY10090010	RELAY	! SDT-S-109DMR	HSL1D016ZE
ST-BY	⚠ T701	/N1B	90M-TS002930R	90M-TS002930R	TRANSF.	! TRANSF. SUB N	CLT5K006ZE
ST-BY	⚠ T701	/N1G	90M-TS002930R	90M-TS002930R	TRANSF.	! TRANSF. SUB N	CLT5K006ZE
ST-BY	⚠ T701	/N1S	90M-TS002930R	90M-TS002930R	TRANSF.	! TRANSF. SUB N	CLT5K006ZE
ST-BY	⚠ T701	/U1B	nsp	90M-TS002950R	TRANSF.	! TRANSF. SUB U	CLT5K006ZU
					TACT PWB		
TACT	J864	/U1B	nsp	nsp	CORD	SN95/PB5, 0.6	C3A206
TACT	J865	/U1B	nsp	nsp	CORD	SN95/PB5, 0.6	C3A206
TACT	SW98	/U1B	nsp	90M-SP001210R	SW	SKHV10910G TACT	CST1A012ZT
					VIDEO PWB (CUP11873Z)		
VIDEO	BN40		nsp	nsp	CORD	WIRE ASSY	CWZSR7001BN40
VIDEO	BN83		nsp	nsp	CORD	WIRE ASSY	CWZSR7001BN83
VIDEO	C702		nsp	00MOA10605020	ELECT CAP.	10UF 50V	CCEA1HH100T
VIDEO	C704		nsp	00MOA10605020	ELECT CAP.	10UF 50V	CCEA1HH100T
VIDEO	C706		nsp	00MOA10605020	ELECT CAP.	10UF 50V	CCEA1HH100T
VIDEO	C707		nsp	nsp	CER. CAP.	47PF 50V JC	CCCT1H470JC
VIDEO	C708		nsp	00MOA47701020	ELECT CAP.	470UF 10V	CCEA1AH471T
VIDEO	C710		nsp	00MOA10605020	ELECT CAP.	10UF 50V	CCEA1HH100T
VIDEO	C711		nsp	nsp	CER. CAP.	47PF 50V JC	CCCT1H470JC
VIDEO	C712		nsp	00MOA47701020	ELECT CAP.	470UF 10V	CCEA1AH471T
VIDEO	C713		nsp	nsp	CER. CAP.	68PF 50V JC	CCCT1H680JC
VIDEO	C714		nsp	00MOA47701020	ELECT CAP.	470UF 10V	CCEA1AH471T
VIDEO	C715		nsp	00MOA10605020	ELECT CAP.	10UF 50V	CCEA1HH100T
VIDEO	C716		nsp	00MOA10605020	ELECT CAP.	10UF 50V	CCEA1HH100T
VIDEO	C717		nsp	00MOA10605020	ELECT CAP.	10UF 50V	CCEA1HH100T
VIDEO	C719		nsp	00MOA10605020	ELECT CAP.	10UF 50V	CCEA1HH100T
VIDEO	C720		nsp	00MOA10605020	ELECT CAP.	10UF 50V	CCEA1HH100T
VIDEO	C722		nsp	00MOA10605020	ELECT CAP.	10UF 50V	CCEA1HH100T
VIDEO	C723		nsp	00MOA10605020	ELECT CAP.	10UF 50V	CCEA1HH100T
VIDEO	C725		nsp	00MOA10605020	ELECT CAP.	10UF 50V	CCEA1HH100T
VIDEO	C726		nsp	00MOA10605020	ELECT CAP.	10UF 50V	CCEA1HH100T
VIDEO	C727		nsp	nsp	CER. CAP.	47PF 50V JC	CCCT1H470JC
VIDEO	C728		nsp	00MOA47701020	ELECT CAP.	470UF 10V	CCEA1AH471T
VIDEO	C729		nsp	nsp	CER. CAP.	47PF 50V JC	CCCT1H470JC
VIDEO	C730		nsp	00MOA10605020	ELECT CAP.	10UF 50V	CCEA1HH100T
VIDEO	C732		nsp	00MOA10605020	ELECT CAP.	10UF 50V	CCEA1HH100T
VIDEO	⚠ C733		nsp	00MOA10605020	ELECT CAP.	10UF 50V	CCEA1HH100T
VIDEO	C734		nsp	nsp	CER. CAP.	47PF 50V JC	CCCT1H470JC
VIDEO	C735		nsp	00MOA47701020	ELECT CAP.	470UF 10V	CCEA1AH471T

NOTE : "nsp" PART IS LISTED FOR REFERENCE ONLY, MARANTZ WILL NOT SUPPLY THESE PARTS.

P.W.B. NAME	POS. NO.	VERS. COLOR	PART NO. (FOR EUR)	PART NO. (MZ)	PART NAME	DESCRIPTION	
VIDEO	C736		nsp	nsp	CER. CAP.	47PF 50V JC	CCCT1H470JC
VIDEO	C737		nsp	00MOA10605020	ELECT CAP.	10UF 50V	CCEA1HH100T
VIDEO	C738		nsp	nsp	CER. CAP.	68PF 50V JC	CCCT1H680JC
VIDEO	C739		nsp	00MOA47701020	ELECT CAP.	470UF 10V	CCEA1AH471T
VIDEO	C740		nsp	nsp	CER. CAP.	68PF 50V JC	CCCT1H680JC
VIDEO	C741		nsp	00MOA10605020	ELECT CAP.	10UF 50V	CCEA1HH100T
VIDEO	C742		nsp	00MOA10605020	ELECT CAP.	10UF 50V	CCEA1HH100T
VIDEO	C743		nsp	nsp	CORD	SN95/PB5, 0.6	C3A206
VIDEO	C744		nsp	00MOA22505020	ELECT CAP.	2.2UF 50V	CCEA1HH2R2T
VIDEO	C745		nsp	00MOA10605020	ELECT CAP.	10UF 50V	CCEA1HH100T
VIDEO	C746		nsp	00MOA10605020	ELECT CAP.	10UF 50V	CCEA1HH100T
VIDEO	C747		nsp	00MOA10605020	ELECT CAP.	10UF 50V	CCEA1HH100T
VIDEO	C748		nsp	nsp	CER. CAP.	0.01UF 50V Z	CCFT1H103ZF
VIDEO	C749		nsp	00MOA10701620	ELECT CAP.	100UF 16V	CCEA1CH101T
VIDEO	C751		nsp	00MOA47505020	ELECT CAP.	4.7UF 50V	CCEA1HH4R7T
VIDEO	C752		nsp	00MOA10605020	ELECT CAP.	10UF 50V	CCEA1HH100T
VIDEO	C753		nsp	00MOA10701620	ELECT CAP.	100UF 16V	CCEA1CH101T
VIDEO	C754		nsp	nsp	CER. CAP.	0.01UF 50V Z	CCFT1H103ZF
VIDEO	C755		nsp	nsp	CER. CAP.	47PF 50V JC	CCCT1H470JC
VIDEO	C756		nsp	nsp	CER. CAP.	0.01UF 50V Z	CCFT1H103ZF
VIDEO	C757		nsp	00MOA10701620	ELECT CAP.	100UF 16V	CCEA1CH101T
VIDEO	C758		nsp	00MOA10701620	ELECT CAP.	100UF 16V	CCEA1CH101T
VIDEO	C759		nsp	nsp	CER. CAP.	0.01UF 50V Z	CCFT1H103ZF
VIDEO	C760		nsp	nsp	CER. CAP.	47PF 50V JC	CCCT1H470JC
VIDEO	C761		nsp	nsp	CER. CAP.	0.01UF 50V Z	CCFT1H103ZF
VIDEO	C762		nsp	00MOA10701620	ELECT CAP.	100UF 16V	CCEA1CH101T
VIDEO	C763		nsp	00MOA10701620	ELECT CAP.	100UF 16V	CCEA1CH101T
VIDEO	C764		nsp	nsp	CER. CAP.	0.01UF 50V Z	CCFT1H103ZF
VIDEO	C765		nsp	nsp	CER. CAP.	47PF 50V JC	CCCT1H470JC
VIDEO	C766		nsp	nsp	CER. CAP.	0.01UF 50V Z	CCFT1H103ZF
VIDEO	C767		nsp	00MOA10701620	ELECT CAP.	100UF 16V	CCEA1CH101T
VIDEO	C768		nsp	nsp	CER. CAP.	1200PF 50V KB	CCKT1H122KB
VIDEO	C769		nsp	00MOA10505020	ELECT CAP.	1UF 50V	CCEA1HH1R0T
VIDEO	C770		nsp	nsp	CER. CAP.	0.01UF 50V Z	CCFT1H103ZF
VIDEO	C771		nsp	00MOA10701620	ELECT CAP.	100UF 16V	CCEA1CH101T
VIDEO	C773		nsp	nsp	CER. CAP.	24PF 50V JC	CCCT1H240JC
VIDEO	C774		nsp	nsp	CER. CAP.	22PF 50V JC	CCCT1H220JC
VIDEO	C775		nsp	00MOA10505020	ELECT CAP.	1UF 50V	CCEA1HH1R0T
VIDEO	C776		nsp	nsp	CER. CAP.	0.01UF 50V Z	CCFT1H103ZF
VIDEO	C777		nsp	nsp	CER. CAP.	30PF 50V JC	CCCT1H300JC
VIDEO	C778	/N1B	nsp	nsp	CER. CAP.	27PF 50V JC	CCCT1H270JC
VIDEO	C778	/N1G	nsp	nsp	CER. CAP.	27PF 50V JC	CCCT1H270JC
VIDEO	C778	/N1S	nsp	nsp	CER. CAP.	27PF 50V JC	CCCT1H270JC
VIDEO	C778	/U1B	nsp	nsp	CER. CAP.	30PF 50V JC	CCCT1H300JC
VIDEO	C779		nsp	00MOA10605020	ELECT CAP.	10UF 50V	CCEA1HH100T
VIDEO	C780		nsp	nsp	CER. CAP.	47PF 50V JC	CCCT1H470JC
VIDEO	C781		nsp	nsp	CER. CAP.	1000PF 50V KB	CCKT1H102KB
VIDEO	C782		nsp	nsp	FILM CAP.	220PF 50V KB	CCKT1H221KB
VIDEO	C783		nsp	00MOA10605020	ELECT CAP.	10UF 50V	CCEA1HH100T
VIDEO	C785		nsp	nsp	CER. CAP.	0.01UF 50V Z	CCFT1H103ZF
VIDEO	C786		nsp	nsp	CER. CAP.	0.01UF 50V Z	CCFT1H103ZF
VIDEO	C787		nsp	00MOA10701620	ELECT CAP.	100UF 16V	CCEA1CH101T
VIDEO	C788		nsp	00MOA10605020	ELECT CAP.	10UF 50V	CCEA1HH100T
VIDEO	C789		nsp	00MOA10605020	ELECT CAP.	10UF 50V	CCEA1HH100T
VIDEO	C790		nsp	nsp	CER. CAP.	0.01UF 50V Z	CCFT1H103ZF
VIDEO	C791		nsp	nsp	CER. CAP.	0.01UF 50V Z	CCFT1H103ZF
VIDEO	C792		nsp	00MOA10701620	ELECT CAP.	100UF 16V	CCEA1CH101T
VIDEO	C793		nsp	nsp	CER. CAP.	0.01UF 50V Z	CCFT1H103ZF
VIDEO	C794		nsp	nsp	CER. CAP.	47PF 50V JC	CCCT1H470JC
VIDEO	C795		nsp	00MOA10701620	ELECT CAP.	100UF 16V	CCEA1CH101T
VIDEO	C796		nsp	nsp	CER. CAP.	0.01UF 50V ZF	CCKT1H103ZF
VIDEO	C797		nsp	00MOA10605020	ELECT CAP.	10UF 50V	CCEA1HH100T
VIDEO	C798		nsp	nsp	CER. CAP.	0.01UF 50V ZF	CCKT1H103ZF
VIDEO	⚠ C799		nsp	nsp	CER. CAP.	0.01UF 50V Z	CCFT1H103ZF
VIDEO	C800		nsp	00MOA10605020	ELECT CAP.	10UF 50V	CCEA1HH100T
VIDEO	C801		nsp	nsp	CORD	SN95/PB5, 0.6	C3A206
VIDEO	C802		nsp	00MOA10605020	ELECT CAP.	10UF 50V	CCEA1HH100T

NOTE : "nsp" PART IS LISTED FOR REFERENCE ONLY, MARANTZ WILL NOT SUPPLY THESE PARTS.

P.W.B. NAME	POS. NO.	VERS. COLOR	PART NO. (FOR EUR)	PART NO. (MZ)	PART NAME	DESCRIPTION	
VIDEO	C803		nsp	nsp	CER. CAP.	0.01UF 50V Z	CCFT1H103ZF
VIDEO	C804		nsp	nsp	CER. CAP.	0.01UF 50V Z	CCFT1H103ZF
VIDEO	C805		nsp	00MOA10701620	ELECT CAP.	100UF 16V	CCEA1CH101T
VIDEO	C806		nsp	nsp	CER. CAP.	0.01UF 50V Z	CCFT1H103ZF
VIDEO	C807		nsp	nsp	CER. CAP.	1000PF 50V KB	CCKT1H102KB
VIDEO	C811		nsp	00MOA10701620	ELECT CAP.	100UF 16V	CCEA1CH101T
VIDEO	C812		nsp	nsp	CER. CAP.	0.01UF 50V Z	CCFT1H103ZF
VIDEO	C813		nsp	nsp	CER. CAP.	0.01UF 50V Z	CCFT1H103ZF
VIDEO	C814		nsp	00MOA10605020	ELECT CAP.	10UF 50V	CCEA1HH100T
VIDEO	C815		nsp	nsp	CER. CAP.	47PF 50V JC	CCCT1H470JC
VIDEO	C817		nsp	00MOA10701620	ELECT CAP.	100UF 16V	CCEA1CH101T
VIDEO	C818		nsp	nsp	CER. CAP.	0.01UF 50V Z	CCFT1H103ZF
VIDEO	C819		nsp	nsp	CER. CAP.	0.01UF 50V Z	CCFT1H103ZF
VIDEO	C820		nsp	00MOA10701620	ELECT CAP.	100UF 16V	CCEA1CH101T
VIDEO	C821		nsp	nsp	CER. CAP.	68PF 50V JC	CCCT1H680JC
VIDEO	C822		nsp	00MOA47701020	ELECT CAP.	470UF 10V	CCEA1AH471T
VIDEO	C823		nsp	00MOA10605020	ELECT CAP.	10UF 50V	CCEA1HH100T
VIDEO	C824		nsp	00MOA10605020	ELECT CAP.	10UF 50V	CCEA1HH100T
VIDEO	C825		nsp	00MOA10605020	ELECT CAP.	10UF 50V	CCEA1HH100T
VIDEO	C827		nsp	nsp	CER. CAP.	1000PF 50V KB	CCKT1H102KB
VIDEO	C828		nsp	nsp	CER. CAP.	0.01UF 50V Z	CCFT1H103ZF
VIDEO	C829		nsp	nsp	CER. CAP.	47PF 50V JC	CCCT1H470JC
VIDEO	C830		nsp	nsp	CER. CAP.	47PF 50V JC	CCCT1H470JC
VIDEO	C831		nsp	00MOA10605020	ELECT CAP.	10UF 50V	CCEA1HH100T
VIDEO	C833		nsp	00MOA10605020	ELECT CAP.	10UF 50V	CCEA1HH100T
VIDEO	C834		nsp	00MOA10605020	ELECT CAP.	10UF 50V	CCEA1HH100T
VIDEO	C848		nsp	nsp	CER. CAP.	1000PF 50V KB	CCKT1H102KB
VIDEO	C849		nsp	nsp	CER. CAP.	0.01UF 50V Z	CCFT1H103ZF
VIDEO	C850		nsp	00MOA10605020	ELECT CAP.	10UF 50V	CCEA1HH100T
VIDEO	CN12		nsp	nsp	CONN.	5P STRAIGHT	CJP05GA19ZY
VIDEO	CN21		nsp	nsp	CONN.	8P STRAIGHT	CJP08GA01ZY
VIDEO	CN31		nsp	nsp	CONN.	6P WAFER	CJP06GA01ZY
VIDEO	CN32		nsp	nsp	CONN.	15P WAFER CARD CABLE	CJP15GA117ZY
VIDEO	CN34		nsp	nsp	CONN.	17P WAFER CARD CABLE	CJP17GA117ZY
VIDEO	CN40		nsp	nsp	CONN.	17P WAFER CARD CABLE	CJP17GA117ZY
VIDEO	D701		nsp	00MHD20015210	DIODE	1SS133T-77	CVD1SS133MT
VIDEO	D702		nsp	00MHD20015210	DIODE	1SS133T-77	CVD1SS133MT
VIDEO	D704		nsp	00MHD20015210	DIODE	1SS133T-77	CVD1SS133MT
VIDEO	D705		nsp	90M-HD201750R	DIODE	1N4003	CVD1N4003SRT
VIDEO	D706		nsp	00MHD20015210	DIODE	1SS133T-77	CVD1SS133MT
VIDEO	D707		nsp	00MHD20015210	DIODE	1SS133T-77	CVD1SS133MT
VIDEO	D708		nsp	90M-HD201750R	DIODE	1N4003	CVD1N4003SRT
VIDEO	D709		nsp	90M-HD201750R	DIODE	1N4003	CVD1N4003SRT
VIDEO	D710		nsp	90M-HD201750R	DIODE	1N4003	CVD1N4003SRT
VIDEO	IC71		00MHC10227090	00MHC10227090	IC	NJM2595D VIDEO S/W	HVINJM2595D
VIDEO	IC72		00MHC10227090	00MHC10227090	IC	NJM2595D VIDEO S/W	HVINJM2595D
VIDEO	IC73		00MHC10227090	00MHC10227090	IC	NJM2595D VIDEO S/W	HVINJM2595D
VIDEO	IC74		90M-HC108400R	90M-HC108400R	IC	NJM2535D VIDEO S/W	HVINJM2535D
VIDEO	IC75		00MHC10185090	00MHC10185090	IC	NJM2264D VIDEO	HVINJM2264D
VIDEO	IC76		00MHC10119090	00MHC10119090	IC	NJM2244D VIDEO	HVINJM2244D
VIDEO	IC77		00MHC10119090	00MHC10119090	IC	NJM2244D VIDEO	HVINJM2244D
VIDEO	IC78		90M-HC109880R	90M-HC109880R	IC	LC747828A13E	CVILC747828A13E
VIDEO	IC79		90M-HC108420R	90M-HC108420R	IC	TC74HC4094AP	HVITC74HC4094AP
VIDEO	IC80		90M-HC108420R	90M-HC108420R	IC	TC74HC4094AP	HVITC74HC4094AP
VIDEO	IC81		00MHC10227090	00MHC10227090	IC	NJM2595D VIDEO S/W	HVINJM2595D
VIDEO	IC82		00MHC10119090	00MHC10119090	IC	NJM2244D VIDEO	HVINJM2244D
VIDEO	IC83		90M-HC108420R	90M-HC108420R	IC	TC74HC4094AP	HVITC74HC4094AP
VIDEO	IC91		90M-HC300560R	90M-HC300560R	IC	KA7805	HVIMC7905C
VIDEO	IC92		00MHC3990809F	00MHC3990809F	IC	NJM7908FA	HVINJM7908FA
VIDEO	J701		nsp	nsp	CORD	SN95/PB5, 0.6	C3A206
VIDEO	J702		nsp	nsp	CORD	SN95/PB5, 0.6	C3A206
VIDEO	J703		nsp	nsp	CORD	SN95/PB5, 0.6	C3A206
VIDEO	J704		nsp	nsp	CORD	SN95/PB5, 0.6	C3A206
VIDEO	J705		nsp	nsp	CORD	SN95/PB5, 0.6	C3A206
VIDEO	J706		nsp	nsp	CORD	SN95/PB5, 0.6	C3A206
VIDEO	J707		nsp	nsp	CORD	SN95/PB5, 0.6	C3A206
VIDEO	J708		nsp	nsp	CORD	SN95/PB5, 0.6	C3A206

NOTE : "nsp" PART IS LISTED FOR REFERENCE ONLY, MARANTZ WILL NOT SUPPLY THESE PARTS.

P.W.B. NAME	POS. NO.	VERS. COLOR	PART NO. (FOR EUR)	PART NO. (MZ)	PART NAME	DESCRIPTION	
VIDEO	J709		nsp	nsp	CORD	SN95/PB5, 0.6	C3A206
VIDEO	J710		nsp	nsp	CORD	SN95/PB5, 0.6	C3A206
VIDEO	J711		nsp	nsp	CORD	SN95/PB5, 0.6	C3A206
VIDEO	J712		nsp	nsp	CORD	SN95/PB5, 0.6	C3A206
VIDEO	J713		nsp	nsp	CORD	SN95/PB5, 0.6	C3A206
VIDEO	J714		nsp	nsp	CORD	SN95/PB5, 0.6	C3A206
VIDEO	J715		nsp	nsp	CORD	SN95/PB5, 0.6	C3A206
VIDEO	J716		nsp	nsp	CORD	SN95/PB5, 0.6	C3A206
VIDEO	J717		nsp	nsp	CORD	SN95/PB5, 0.6	C3A206
VIDEO	J718		nsp	nsp	CORD	SN95/PB5, 0.6	C3A206
VIDEO	J719		nsp	nsp	CORD	SN95/PB5, 0.6	C3A206
VIDEO	J720		nsp	nsp	CORD	SN95/PB5, 0.6	C3A206
VIDEO	J721		nsp	nsp	CORD	SN95/PB5, 0.6	C3A206
VIDEO	J722		nsp	nsp	CORD	SN95/PB5, 0.6	C3A206
VIDEO	J723		nsp	nsp	CORD	SN95/PB5, 0.6	C3A206
VIDEO	J724		nsp	nsp	CORD	SN95/PB5, 0.6	C3A206
VIDEO	J725		nsp	nsp	CORD	SN95/PB5, 0.6	C3A206
VIDEO	J726		nsp	nsp	CORD	SN95/PB5, 0.6	C3A206
VIDEO	J727		nsp	nsp	CORD	SN95/PB5, 0.6	C3A206
VIDEO	J728		nsp	nsp	CORD	SN95/PB5, 0.6	C3A206
VIDEO	J729		nsp	nsp	CORD	SN95/PB5, 0.6	C3A206
VIDEO	J730		nsp	nsp	CORD	SN95/PB5, 0.6	C3A206
VIDEO	J731		nsp	nsp	CORD	SN95/PB5, 0.6	C3A206
VIDEO	J732		nsp	nsp	CORD	SN95/PB5, 0.6	C3A206
VIDEO	J733		nsp	nsp	CORD	SN95/PB5, 0.6	C3A206
VIDEO	J734		nsp	nsp	CORD	SN95/PB5, 0.6	C3A206
VIDEO	J735		nsp	nsp	CORD	SN95/PB5, 0.6	C3A206
VIDEO	J736		nsp	nsp	CORD	SN95/PB5, 0.6	C3A206
VIDEO	J737		nsp	nsp	CORD	SN95/PB5, 0.6	C3A206
VIDEO	J738		nsp	nsp	CORD	SN95/PB5, 0.6	C3A206
VIDEO	J739		nsp	nsp	CORD	SN95/PB5, 0.6	C3A206
VIDEO	J740		nsp	nsp	CORD	SN95/PB5, 0.6	C3A206
VIDEO	J741		nsp	nsp	CORD	SN95/PB5, 0.6	C3A206
VIDEO	J742		nsp	nsp	CORD	SN95/PB5, 0.6	C3A206
VIDEO	J743		nsp	nsp	CORD	SN95/PB5, 0.6	C3A206
VIDEO	J744		nsp	nsp	CORD	SN95/PB5, 0.6	C3A206
VIDEO	J745		nsp	nsp	CORD	SN95/PB5, 0.6	C3A206
VIDEO	J746		nsp	nsp	CORD	SN95/PB5, 0.6	C3A206
VIDEO	J747		nsp	nsp	CORD	SN95/PB5, 0.6	C3A206
VIDEO	J748		nsp	nsp	CORD	SN95/PB5, 0.6	C3A206
VIDEO	J749		nsp	nsp	CORD	SN95/PB5, 0.6	C3A206
VIDEO	J750		nsp	nsp	CORD	SN95/PB5, 0.6	C3A206
VIDEO	J751		nsp	nsp	CORD	SN95/PB5, 0.6	C3A206
VIDEO	J752		nsp	nsp	CORD	SN95/PB5, 0.6	C3A206
VIDEO	J753		nsp	nsp	CORD	SN95/PB5, 0.6	C3A206
VIDEO	J755		nsp	nsp	CORD	SN95/PB5, 0.6	C3A206
VIDEO	J756		nsp	nsp	CORD	SN95/PB5, 0.6	C3A206
VIDEO	J757		nsp	nsp	CORD	SN95/PB5, 0.6	C3A206
VIDEO	J758		nsp	nsp	CORD	SN95/PB5, 0.6	C3A206
VIDEO	J759		nsp	nsp	CORD	SN95/PB5, 0.6	C3A206
VIDEO	J760		nsp	nsp	CORD	SN95/PB5, 0.6	C3A206
VIDEO	J761		nsp	nsp	CORD	SN95/PB5, 0.6	C3A206
VIDEO	J762		nsp	nsp	CORD	SN95/PB5, 0.6	C3A206
VIDEO	J763		nsp	nsp	CORD	SN95/PB5, 0.6	C3A206
VIDEO	J764		nsp	nsp	CORD	SN95/PB5, 0.6	C3A206
VIDEO	J765		nsp	nsp	CORD	SN95/PB5, 0.6	C3A206
VIDEO	J766		nsp	nsp	CORD	SN95/PB5, 0.6	C3A206
VIDEO	J767		nsp	nsp	CORD	SN95/PB5, 0.6	C3A206
VIDEO	J768		nsp	nsp	CORD	SN95/PB5, 0.6	C3A206
VIDEO	J769		nsp	nsp	CORD	SN95/PB5, 0.6	C3A206
VIDEO	J770		nsp	nsp	CORD	SN95/PB5, 0.6	C3A206
VIDEO	J771		nsp	nsp	CORD	SN95/PB5, 0.6	C3A206
VIDEO	J772		nsp	nsp	CORD	SN95/PB5, 0.6	C3A206
VIDEO	J773		nsp	nsp	CORD	SN95/PB5, 0.6	C3A206
VIDEO	J774		nsp	nsp	CORD	SN95/PB5, 0.6	C3A206
VIDEO	J775		nsp	nsp	CORD	SN95/PB5, 0.6	C3A206
VIDEO	J776		nsp	nsp	CORD	SN95/PB5, 0.6	C3A206

NOTE : "nsp" PART IS LISTED FOR REFERENCE ONLY, MARANTZ WILL NOT SUPPLY THESE PARTS.

P.W.B. NAME	POS. NO.	VERS. COLOR	PART NO. (FOR EUR)	PART NO. (MZ)	PART NAME	DESCRIPTION	
VIDEO	J777		nsp	nsp	CORD	SN95/PB5, 0.6	C3A206
VIDEO	J778		nsp	nsp	CORD	SN95/PB5, 0.6	C3A206
VIDEO	J779		nsp	nsp	CORD	SN95/PB5, 0.6	C3A206
VIDEO	J780		nsp	nsp	CORD	SN95/PB5, 0.6	C3A206
VIDEO	J781		nsp	nsp	CORD	SN95/PB5, 0.6	C3A206
VIDEO	J782		nsp	nsp	CORD	SN95/PB5, 0.6	C3A206
VIDEO	J785		nsp	nsp	CORD	SN95/PB5, 0.6	C3A206
VIDEO	J786		nsp	nsp	CORD	SN95/PB5, 0.6	C3A206
VIDEO	J787		nsp	nsp	CORD	SN95/PB5, 0.6	C3A206
VIDEO	J788		nsp	nsp	CORD	SN95/PB5, 0.6	C3A206
VIDEO	J789		nsp	nsp	CORD	SN95/PB5, 0.6	C3A206
VIDEO	J790		nsp	nsp	CORD	SN95/PB5, 0.6	C3A206
VIDEO	J792		nsp	nsp	CORD	SN95/PB5, 0.6	C3A206
VIDEO	J793		nsp	nsp	CORD	SN95/PB5, 0.6	C3A206
VIDEO	J794		nsp	nsp	CORD	SN95/PB5, 0.6	C3A206
VIDEO	J795		nsp	nsp	CORD	SN95/PB5, 0.6	C3A206
VIDEO	J796		nsp	nsp	CORD	SN95/PB5, 0.6	C3A206
VIDEO	J797		nsp	nsp	CORD	SN95/PB5, 0.6	C3A206
VIDEO	J798		nsp	nsp	CORD	SN95/PB5, 0.6	C3A206
VIDEO	J799		nsp	nsp	CORD	SN95/PB5, 0.6	C3A206
VIDEO	J800		nsp	nsp	CORD	SN95/PB5, 0.6	C3A206
VIDEO	J802		nsp	nsp	CORD	SN95/PB5, 0.6	C3A206
VIDEO	J803		nsp	nsp	CORD	SN95/PB5, 0.6	C3A206
VIDEO	J804		nsp	nsp	CORD	SN95/PB5, 0.6	C3A206
VIDEO	J805		nsp	nsp	CORD	SN95/PB5, 0.6	C3A206
VIDEO	J806		nsp	nsp	CORD	SN95/PB5, 0.6	C3A206
VIDEO	J807		nsp	nsp	CORD	SN95/PB5, 0.6	C3A206
VIDEO	J808		nsp	nsp	CORD	SN95/PB5, 0.6	C3A206
VIDEO	J809		nsp	nsp	CORD	SN95/PB5, 0.6	C3A206
VIDEO	J810		nsp	nsp	CORD	SN95/PB5, 0.6	C3A206
VIDEO	J811		nsp	nsp	CORD	SN95/PB5, 0.6	C3A206
VIDEO	J812		nsp	nsp	CORD	SN95/PB5, 0.6	C3A206
VIDEO	J813		nsp	nsp	CORD	SN95/PB5, 0.6	C3A206
VIDEO	J814		nsp	nsp	CORD	SN95/PB5, 0.6	C3A206
VIDEO	J815		nsp	nsp	CORD	SN95/PB5, 0.6	C3A206
VIDEO	J817		nsp	nsp	CORD	SN95/PB5, 0.6	C3A206
VIDEO	J818		nsp	nsp	CORD	SN95/PB5, 0.6	C3A206
VIDEO	J819		nsp	nsp	CORD	SN95/PB5, 0.6	C3A206
VIDEO	J820		nsp	nsp	CORD	SN95/PB5, 0.6	C3A206
VIDEO	J821		nsp	nsp	CORD	SN95/PB5, 0.6	C3A206
VIDEO	J822		nsp	nsp	CORD	SN95/PB5, 0.6	C3A206
VIDEO	J823		nsp	nsp	CORD	SN95/PB5, 0.6	C3A206
VIDEO	J824		nsp	nsp	CORD	SN95/PB5, 0.6	C3A206
VIDEO	J825		nsp	nsp	CORD	SN95/PB5, 0.6	C3A206
VIDEO	J826		nsp	nsp	CORD	SN95/PB5, 0.6	C3A206
VIDEO	J833		nsp	nsp	CORD	SN95/PB5, 0.6	C3A206
VIDEO	J834		nsp	nsp	CORD	SN95/PB5, 0.6	C3A206
VIDEO	J850		nsp	nsp	CORD	SN95/PB5, 0.6	C3A206
VIDEO	J851		nsp	nsp	CORD	SN95/PB5, 0.6	C3A206
VIDEO	J852		nsp	nsp	CORD	SN95/PB5, 0.6	C3A206
VIDEO	J853		nsp	nsp	CORD	SN95/PB5, 0.6	C3A206
VIDEO	J874		nsp	nsp	CORD	SN95/PB5, 0.6	C3A206
VIDEO	J930		nsp	nsp	CORD	SN95/PB5, 0.6	C3A206
VIDEO	J931		nsp	nsp	CORD	SN95/PB5, 0.6	C3A206
VIDEO	J932		nsp	nsp	CORD	SN95/PB5, 0.6	C3A206
VIDEO	J933		nsp	nsp	CORD	SN95/PB5, 0.6	C3A206
VIDEO	J934		nsp	nsp	CORD	SN95/PB5, 0.6	C3A206
VIDEO	J935		nsp	nsp	CORD	SN95/PB5, 0.6	C3A206
VIDEO	JK71		90M-YT003750R	90M-YT003750R	TERMINAL	YELLOW GOLD	CJJ4S037Z
VIDEO	JK72		90M-YT003750R	90M-YT003750R	TERMINAL	YELLOW GOLD	CJJ4S037Z
VIDEO	JK73		90M-YT003710R	90M-YT003710R	TERMINAL	VIDEO	CJJ4N044Z
VIDEO	JK74		90M-YT003780R	90M-YT003780R	TERMINAL	S-VIDEO (3P/H)	CJJ9S002Z
VIDEO	JK75		90M-YT003770R	90M-YT003770R	TERMINAL	S-VIDEO (2P/H)	CJJ9N005Z
VIDEO	JK76		90M-YT003770R	90M-YT003770R	TERMINAL	S-VIDEO (2P/H)	CJJ9N005Z
VIDEO	L701		nsp	nsp	COIL	33UH	HLQ02C330JT
VIDEO	L702		nsp	nsp	COIL	10UH,K	HLQ02C100KT
VIDEO	Q701		00MHT600111B0	00MHT600111B0	TRS.	KTA1267Y	HVTKTA1267YT

NOTE : "nsp" PART IS LISTED FOR REFERENCE ONLY, MARANTZ WILL NOT SUPPLY THESE PARTS.

P.W.B. NAME	POS. NO.	VERS. COLOR	PART NO. (FOR EUR)	PART NO. (MZ)	PART NAME	DESCRIPTION	
VIDEO	Q702		00MBA10001000	00MBA10001000	TRS.	KRA102M	HVTKRA102MT
VIDEO	Q703		00MHT30001000	00MHT30001000	TRS.	KTC3199Y	HVTKTC3199YT
VIDEO	Q704		00MHT30001000	00MHT30001000	TRS.	KTC3199Y	HVTKTC3199YT
VIDEO	Q705	/N1B	00MBA20004000	00MBA20004000	TRS.	KRC111M	HVTKRC111MT
VIDEO	Q705	/N1G	00MBA20004000	00MBA20004000	TRS.	KRC111M	HVTKRC111MT
VIDEO	Q705	/N1S	00MBA20004000	00MBA20004000	TRS.	KRC111M	HVTKRC111MT
VIDEO	Q706	/N1B	00MHT805501B0	00MHT805501B0	TRS.	KTC2874B	HVTKTC2874BT
VIDEO	Q706	/N1G	00MHT805501B0	00MHT805501B0	TRS.	KTC2874B	HVTKTC2874BT
VIDEO	Q706	/N1S	00MHT805501B0	00MHT805501B0	TRS.	KTC2874B	HVTKTC2874BT
VIDEO	Q707	/N1B	00MBA10001000	00MBA10001000	TRS.	KRA102M	HVTKRA102MT
VIDEO	Q707	/N1G	00MBA10001000	00MBA10001000	TRS.	KRA102M	HVTKRA102MT
VIDEO	Q707	/N1S	00MBA10001000	00MBA10001000	TRS.	KRA102M	HVTKRA102MT
VIDEO	Q708		00MHT30001000	00MHT30001000	TRS.	KTC3199Y	HVTKTC3199YT
VIDEO	Q710		00MBA20001000	00MBA20001000	TRS.	KRC102M	HVTKRC102MT
VIDEO	Q711		00MHT30001000	00MHT30001000	TRS.	KTC3199Y	HVTKTC3199YT
VIDEO	Q712		00MHT30001000	00MHT30001000	TRS.	KTC3199Y	HVTKTC3199YT
VIDEO	Q713		00MBA10001000	00MBA10001000	TRS.	KRA102M	HVTKRA102MT
VIDEO	R701		nsp	nsp	RES.	75 OHM 1/5W J	CRD20TJ750T
VIDEO	R702		nsp	nsp	CORD	SN95/PB5, 0.6	C3A206
VIDEO	R703		nsp	nsp	RES.	75 OHM 1/5W J	CRD20TJ750T
VIDEO	R704		nsp	nsp	CORD	SN95/PB5, 0.6	C3A206
VIDEO	R705		nsp	nsp	RES.	75 OHM 1/5W J	CRD20TJ750T
VIDEO	R706		nsp	nsp	CORD	SN95/PB5, 0.6	C3A206
VIDEO	R707		nsp	nsp	RES.	75 OHM 1/5W J	CRD20TJ750T
VIDEO	R708		nsp	nsp	RES.	75 OHM 1/5W J	CRD20TJ750T
VIDEO	R709		nsp	nsp	CORD	SN95/PB5, 0.6	C3A206
VIDEO	R710		nsp	nsp	RES.	75 OHM 1/5W J	CRD20TJ750T
VIDEO	R711		nsp	nsp	RES.	75 OHM 1/5W J	CRD20TJ750T
VIDEO	R712		nsp	nsp	RES.	75 OHM 1/5W J	CRD20TJ750T
VIDEO	R713		nsp	nsp	RES.	75 OHM 1/5W J	CRD20TJ750T
VIDEO	R714		nsp	nsp	CORD	SN95/PB5, 0.6	C3A206
VIDEO	R715		nsp	nsp	RES.	75 OHM 1/5W J	CRD20TJ750T
VIDEO	R716		nsp	nsp	RES.	75 OHM 1/5W J	CRD20TJ750T
VIDEO	R717		nsp	nsp	CORD	SN95/PB5, 0.6	C3A206
VIDEO	R718		nsp	nsp	RES.	75 OHM 1/5W J	CRD20TJ750T
VIDEO	R719		nsp	nsp	RES.	75 OHM 1/5W J	CRD20TJ750T
VIDEO	R720		nsp	nsp	CORD	SN95/PB5, 0.6	C3A206
VIDEO	R721		nsp	nsp	RES.	75 OHM 1/5W J	CRD20TJ750T
VIDEO	R722		nsp	nsp	RES.	75 OHM 1/5W J	CRD20TJ750T
VIDEO	R723		nsp	nsp	RES.	75 OHM 1/5W J	CRD20TJ750T
VIDEO	R724		nsp	nsp	RES.	75 OHM 1/5W J	CRD20TJ750T
VIDEO	R725		nsp	nsp	CORD	SN95/PB5, 0.6	C3A206
VIDEO	R726		nsp	nsp	RES.	75 OHM 1/5W J	CRD20TJ750T
VIDEO	R727		nsp	nsp	RES.	75 OHM 1/5W J	CRD20TJ750T
VIDEO	R728		nsp	nsp	RES.	75 OHM 1/5W J	CRD20TJ750T
VIDEO	R729		nsp	nsp	RES.	75 OHM 1/5W J	CRD20TJ750T
VIDEO	R730		nsp	nsp	RES.	220K OHM 1/6W J	CRD20TJ224T
VIDEO	R731		nsp	nsp	RES.	10 OHM 1/5W J	CRD20TJ100T
VIDEO	R732		nsp	nsp	RES.	220 OHM 1/5W J	CRD20TJ221T
VIDEO	R733		nsp	nsp	RES.	10K OHM 1/5W J	CRD20TJ103T
VIDEO	R734		nsp	nsp	RES.	1M OHM 1/5W J	CRD20TJ105T
VIDEO	R735		nsp	nsp	RES.	1M OHM 1/5W J	CRD20TJ105T
VIDEO	R736		nsp	nsp	RES.	100K OHM 1/5W J	CRD20TJ104T
VIDEO	R737		nsp	nsp	RES.	1M OHM 1/5W J	CRD20TJ105T
VIDEO	R738		nsp	nsp	RES.	10K OHM 1/5W J	CRD20TJ103T
VIDEO	R739		nsp	nsp	RES.	15K OHM 1/5W J	CRD20TJ153T
VIDEO	R740		nsp	nsp	RES.	470 OHM 1/5W J	CRD20TJ471T
VIDEO	R741		nsp	nsp	RES.	75 OHM 1/5W J	CRD20TJ750T
VIDEO	R742		nsp	nsp	RES.	75 OHM 1/5W J	CRD20TJ750T
VIDEO	R743		nsp	nsp	RES.	75 OHM 1/5W J	CRD20TJ750T
VIDEO	R744		nsp	nsp	RES.	220 OHM 1/5W J	CRD20TJ221T
VIDEO	R745		nsp	nsp	CORD	SN95/PB5, 0.6	C3A206
VIDEO	R746		nsp	nsp	RES.	1M OHM 1/5W J	CRD20TJ105T
VIDEO	R747	/U1B	nsp	nsp	CORD	SN95/PB5, 0.6	C3A206
VIDEO	R750		nsp	nsp	RES.	10K OHM 1/5W J	CRD20TJ103T
VIDEO	R752		nsp	nsp	RES.	75 OHM 1/5W J	CRD20TJ750T
VIDEO	R753		nsp	nsp	RES.	220 OHM 1/5W J	CRD20TJ221T

NOTE : "nsp" PART IS LISTED FOR REFERENCE ONLY, MARANTZ WILL NOT SUPPLY THESE PARTS.

P.W.B. NAME	POS. NO.	VERS. COLOR	PART NO. (FOR EUR)	PART NO. (MZ)	PART NAME	DESCRIPTION	
VIDEO	R756		nsp	nsp	CORD	SN95/PB5, 0.6	C3A206
VIDEO	R758		nsp	nsp	RES.	4.7K OHM 1/5W J	CRD20TJ472T
VIDEO	R759		nsp	nsp	RES.	3.3K OHM 1/5W J	CRD20TJ332T
VIDEO	R761		nsp	nsp	RES.	100K OHM 1/5W J	CRD20TJ104T
VIDEO	R762		nsp	nsp	RES.	1M OHM 1/5W J	CRD20TJ105T
VIDEO	R763		nsp	nsp	RES.	3.3K OHM 1/5W J	CRD20TJ332T
VIDEO	R764		nsp	nsp	RES.	3.3K OHM 1/5W J	CRD20TJ332T
VIDEO	R765		nsp	nsp	RES.	1M OHM 1/5W J	CRD20TJ105T
VIDEO	R766		nsp	nsp	RES.	1M OHM 1/5W J	CRD20TJ105T
VIDEO	R767		nsp	nsp	RES.	1M OHM 1/5W J	CRD20TJ105T
VIDEO	R768		nsp	nsp	RES.	4.7K OHM 1/5W J	CRD20TJ472T
VIDEO	R769		nsp	nsp	RES.	1K OHM 1/5W J	CRD20TJ102T
VIDEO	R770		nsp	nsp	RES.	10K OHM 1/5W J	CRD20TJ103T
VIDEO	R771		nsp	nsp	RES.	56 OHM 1/5W J	CRD20TJ560T
VIDEO	R772		nsp	nsp	RES.	1K OHM 1/5W J	CRD20TJ102T
VIDEO	R773		nsp	nsp	RES.	10K OHM 1/5W J	CRD20TJ103T
VIDEO	R774		nsp	nsp	RES.	1K OHM 1/5W J	CRD20TJ102T
VIDEO	R775		nsp	nsp	CORD	SN95/PB5, 0.6	C3A206
VIDEO	R776		nsp	nsp	RES.	1M OHM 1/5W J	CRD20TJ105T
VIDEO	R777		nsp	nsp	RES.	1M OHM 1/5W J	CRD20TJ105T
VIDEO	R778		nsp	nsp	RES.	1M OHM 1/5W J	CRD20TJ105T
VIDEO	R781		nsp	nsp	RES.	10K OHM 1/5W J	CRD20TJ103T
VIDEO	R782		nsp	nsp	RES.	100 OHM 1/5W J	CRD20TJ101T
VIDEO	R783		nsp	nsp	RES.	10K OHM 1/5W J	CRD20TJ103T
VIDEO	R786		nsp	nsp	RES.	1M OHM 1/5W J	CRD20TJ105T
VIDEO	R787		nsp	nsp	RES.	1M OHM 1/5W J	CRD20TJ105T
VIDEO	R788		nsp	nsp	RES.	1M OHM 1/5W J	CRD20TJ105T
VIDEO	R789		nsp	nsp	RES.	75 OHM 1/5W J	CRD20TJ750T
VIDEO	R790		nsp	nsp	RES.	75 OHM 1/5W J	CRD20TJ750T
VIDEO	R791		nsp	nsp	RES.	100 OHM 1/5W J	CRD20TJ101T
VIDEO	R792		nsp	nsp	RES.	10K OHM 1/5W J	CRD20TJ103T
VIDEO	R793		nsp	nsp	RES.	75 OHM 1/5W J	CRD20TJ750T
VIDEO	R794		nsp	nsp	RES.	75 OHM 1/5W J	CRD20TJ750T
VIDEO	R795		nsp	nsp	RES.	3.3K OHM 1/5W J	CRD20TJ332T
VIDEO	R796		nsp	nsp	RES.	10K OHM 1/5W J	CRD20TJ103T
VIDEO	R797		nsp	nsp	RES.	100 OHM 1/5W J	CRD20TJ101T
VIDEO	R799	/N1B	nsp	nsp	RES.	10K OHM 1/5W J	CRD20TJ103T
VIDEO	R799	/N1G	nsp	nsp	RES.	10K OHM 1/5W J	CRD20TJ103T
VIDEO	R799	/N1S	nsp	nsp	RES.	10K OHM 1/5W J	CRD20TJ103T
VIDEO	R821		nsp	nsp	RES.	10K OHM 1/5W J	CRD20TJ103T
VIDEO	RJ10		nsp	nsp	CORD	SN95/PB5, 0.6	C3A206
VIDEO	X701		90M-JX001080R	90M-JX001080R	X'TAL	14M318	HOX14318D220F
VIDEO	X702	/N1B	90M-JX001090R	90M-JX001090R	X'TAL	17M318	HOX17744D220F
VIDEO	X702	/N1G	90M-JX001090R	90M-JX001090R	X'TAL	17M318	HOX17744D220F
VIDEO	X702	/N1S	90M-JX001090R	90M-JX001090R	X'TAL	17M318	HOX17744D220F
					VOLUME PWB (CUP11869Z-3)		
VOL	BK84		nsp	nsp	TERMINAL	PLATE EARTH	CMC3A111
VOL	BK85		nsp	nsp	TERMINAL	PLATE EARTH	CMC3A111
VOL	BN12		nsp	nsp	CORD	WIRE ASSY	CWB1B005300EN
VOL	BN85		nsp	nsp	CORD	WIRE ASSY	CWZSR7001BN85
VOL	C814		nsp	nsp	CER. CAP.	100PF 50V K	HCBS1H101KBT
VOL	C815		nsp	nsp	CER. CAP.	100PF 50V K	HCBS1H101KBT
VOL	C829		nsp	00MOA10605020	ELECT CAP.	10UF 50V	CCEA1HH100T
VOL	C830		nsp	00MOA10605020	ELECT CAP.	10UF 50V	CCEA1HH100T
VOL	C831		nsp	00MOA10605020	ELECT CAP.	10UF 50V	CCEA1HH100T
VOL	C832		nsp	00MOA10605020	ELECT CAP.	10UF 50V	CCEA1HH100T
VOL	C833		nsp	nsp	CER. CAP.	0.1UF 50V Z	HCBS1H104ZFT
VOL	C834		nsp	nsp	CER. CAP.	470PF 50V	HCBS1H471KBT
VOL	C835		nsp	nsp	CER. CAP.	470PF 50V	HCBS1H471KBT
VOL	C836		nsp	nsp	CER. CAP.	0.1UF 50V Z	HCBS1H104ZFT
VOL	C837		nsp	nsp	CER. CAP.	1000PF 50V B	HCBS1H102KBT
VOL	C838		nsp	nsp	CER. CAP.	1000PF 50V B	HCBS1H102KBT
VOL	C840		nsp	nsp	CER. CAP.	0.1UF 50V Z	HCBS1H104ZFT
VOL	C846		nsp	nsp	CER. CAP.	0.01UF 50V Z	HCBS1H103ZFT
VOL	C847		nsp	00MOA47602520	ELECT CAP.	47UF 25V	CCEA1EH470T
VOL	C848		nsp	nsp	CER. CAP.	0.1UF 50V Z	HCBS1H104ZFT
VOL	C852		nsp	nsp	CER. CAP.	0.1UF 50V Z	HCBS1H104ZFT

NOTE : "nsp" PART IS LISTED FOR REFERENCE ONLY, MARANTZ WILL NOT SUPPLY THESE PARTS.

P.W.B. NAME	POS. NO.	VERS. COLOR	PART NO. (FOR EUR)	PART NO. (MZ)	PART NAME	DESCRIPTION	
VOL	C890		nsp	nsp	CER. CAP.	0.01UF 50V Z	HCBS1H103ZFT
VOL	CN11		nsp	nsp	CONN.	ANGLE 7PIN	CJP07GB46ZY
VOL	CN52		nsp	nsp	CONN.	STRAIGHT 8PIN	CJP08GA19ZY
VOL	D805		90M-HI101190R	90M-HI101190R	L.E.D.	BLUE LED TOL-52CSBBCEAB2	CVD52CSBBCEAB2
VOL	EN81		90M-SR000240R	90M-SR000240R	ROTARY SW	EC16B243040HB	HSR2A004Z
VOL	IC83		00MHC10053090	00MHC10053090	IC	NJM2068DD	HVINJM2068DD
VOL	IC84		90M-HC108910R	90M-HC108910R	IC	74VHC08	HVI74VHC08TTR
VOL	J801		nsp	nsp	CORD	SN95/PB5, 0.6	C3A206
VOL	J803		nsp	nsp	CORD	SN95/PB5, 0.6	C3A206
VOL	J804		nsp	nsp	CORD	SN95/PB5, 0.6	C3A206
VOL	J805		nsp	nsp	CORD	SN95/PB5, 0.6	C3A206
VOL	J842		nsp	nsp	CORD	SN95/PB5, 0.6	C3A206
VOL	J843		nsp	nsp	CORD	SN95/PB5, 0.6	C3A206
VOL	J844		nsp	nsp	CORD	SN95/PB5, 0.6	C3A206
VOL	J871		nsp	nsp	CORD	SN95/PB5, 0.6	C3A206
VOL	JK83		90M-YT003240R	90M-YT003240R	TERMINAL	S-TERMINAL 1P	CJJ9M004Z
VOL	JK84		90M-YT004310R	90M-YT004310R	TERMINAL	CINCH 3P BLACK GOLDPLATE	CJJ4S041Z
VOL	JK87		90M-YT005030R	90M-YT005030R	OPT. CONN.	TORX177L	HJSTORX177L
VOL	Q813		00MBA10001000	00MBA10001000	TRS.	KRA102M	HVTKRA102MT
VOL	R806		nsp	nsp	RES.	10K OHM 1/5W J	CRD20TJ103T
VOL	R807		nsp	nsp	RES.	10K OHM 1/5W J	CRD20TJ103T
VOL	R808		nsp	nsp	RES.	10K OHM 1/5W J	CRD20TJ103T
VOL	R809		nsp	nsp	RES.	10K OHM 1/5W J	CRD20TJ103T
VOL	R834		nsp	nsp	RES.	47K OHM 1/5W J	CRD20TJ473T
VOL	R835		nsp	nsp	RES.	47K OHM 1/5W J	CRD20TJ473T
VOL	R836		nsp	nsp	RES.	47K OHM 1/5W J	CRD20TJ473T
VOL	R837		nsp	nsp	RES.	47K OHM 1/5W J	CRD20TJ473T
VOL	R838		nsp	nsp	RES.	100 OHM 1/5W J	CRD20TJ101T
VOL	R839		nsp	nsp	RES.	100 OHM 1/5W J	CRD20TJ101T
VOL	R841		nsp	nsp	RES.	75 OHM 1/5W J	CRD20TJ750T
VOL	R843		nsp	nsp	RES.	75 OHM 1/5W J	CRD20TJ750T
VOL	R844		nsp	nsp	RES.	75 OHM 1/5W J	CRD20TJ750T
VOL	R851		nsp	nsp	RES.	10 OHM 1/5W J	CRD20TJ100T
VOL	R854		nsp	nsp	RES.	220 OHM 1/5W J	CRD20TJ221T
VOL	R855		nsp	nsp	RES.	10K OHM 1/5W J	CRD20TJ103T
					XM PWB (CUP11877Y)		
XM	C501	/U1B	nsp	00MOA47602520	ELECT CAP.	47UF 25V	CCEA1EH470T
XM	C502	/U1B	nsp	00MDK96104300	CER. CAP.	0.1UF 50V ZF	CCUS1H104ZF
XM	C503	/U1B	nsp	00MDK96104300	CER. CAP.	0.1UF 50V ZF	CCUS1H104ZF
XM	C504	/U1B	nsp	00MDK96104300	CER. CAP.	0.1UF 50V ZF	CCUS1H104ZF
XM	C505	/U1B	nsp	00MDK96104300	CER. CAP.	0.1UF 50V ZF	CCUS1H104ZF
XM	C506	/U1B	nsp	00MDK96104300	CER. CAP.	0.1UF 50V ZF	CCUS1H104ZF
XM	C507	/U1B	nsp	00MDK96104300	CER. CAP.	0.1UF 50V ZF	CCUS1H104ZF
XM	C508	/U1B	nsp	00MDK96104300	CER. CAP.	0.1UF 50V ZF	CCUS1H104ZF
XM	C509	/U1B	nsp	00MDK96104300	CER. CAP.	0.1UF 50V ZF	CCUS1H104ZF
XM	C510	/U1B	nsp	00MDK96104300	CER. CAP.	0.1UF 50V ZF	CCUS1H104ZF
XM	C511	/U1B	nsp	00MDK96104300	CER. CAP.	0.1UF 50V ZF	CCUS1H104ZF
XM	C514	/U1B	nsp	00MDK96102300	CER. CAP.	1000PF 50V KC	CCUS1H102KC
XM	C515	/U1B	nsp	00MDK96104300	CER. CAP.	0.1UF 50V ZF	CCUS1H104ZF
XM	C517	/U1B	nsp	00MDK96104300	CER. CAP.	0.1UF 50V ZF	CCUS1H104ZF
XM	C518	/U1B	nsp	00MDK96104300	CER. CAP.	0.1UF 50V ZF	CCUS1H104ZF
XM	C519	/U1B	nsp	00MDK96102300	CER. CAP.	1000PF 50V KC	CCUS1H102KC
XM	C520	/U1B	nsp	00MDK96102300	CER. CAP.	1000PF 50V KC	CCUS1H102KC
XM	C521	/U1B	nsp	00MDK96102300	CER. CAP.	1000PF 50V KC	CCUS1H102KC
XM	C522	/U1B	nsp	00MDK96102300	CER. CAP.	1000PF 50V KC	CCUS1H102KC
XM	C523	/U1B	nsp	00MDD95220300	CER. CAP.	22PF 50V JA	CCUS1H220JA
XM	C524	/U1B	nsp	00MDD95220300	CER. CAP.	22PF 50V JA	CCUS1H220JA
XM	C601	/U1B	nsp	00MDK96102300	CER. CAP.	1000PF 50V KC	CCUS1H102KC
XM	C602	/U1B	nsp	00MDK96104300	CER. CAP.	0.1UF 50V ZF	CCUS1H104ZF
XM	C603	/U1B	nsp	00MOA10605020	ELECT CAP.	10UF 50V	CCEA1HH100T
XM	C604	/U1B	nsp	00MDK96104300	CER. CAP.	0.1UF 50V ZF	CCUS1H104ZF
XM	C605	/U1B	nsp	00MOA10505020	ELECT CAP.	1UF 50V	CCEA1HH1R0T
XM	C606	/U1B	nsp	00MDK96104300	CER. CAP.	0.1UF 50V ZF	CCUS1H104ZF
XM	C607	/U1B	nsp	00MOA47602520	ELECT CAP.	47UF 25V	CCEA1EH470T
XM	C611	/U1B	nsp	00MOA10605020	ELECT CAP.	10UF 50V	CCEA1HH100T
XM	C612	/U1B	nsp	00MOA10605020	ELECT CAP.	10UF 50V	CCEA1HH100T
XM	C613	/U1B	nsp	00MOA10605020	ELECT CAP.	10UF 50V	CCEA1HH100T

NOTE : "nsp" PART IS LISTED FOR REFERENCE ONLY, MARANTZ WILL NOT SUPPLY THESE PARTS.

P.W.B. NAME	POS. NO.	VERS. COLOR	PART NO. (FOR EUR)	PART NO. (MZ)	PART NAME	DESCRIPTION	
XM	C614	/U1B	nsp	00MOA10605020	ELECT CAP.	10UF 50V	CCEA1HH100T
XM	C615	/U1B	nsp	00MDK96122300	CER. CAP.	1200PF 50V KC	CCUS1H122KC
XM	C616	/U1B	nsp	00MDK96122300	CER. CAP.	1200PF 50V KC	CCUS1H122KC
XM	C617	/U1B	nsp	00MDK96122300	CER. CAP.	1200PF 50V KC	CCUS1H122KC
XM	C618	/U1B	nsp	00MDK96122300	CER. CAP.	1200PF 50V KC	CCUS1H122KC
XM	C619	/U1B	nsp	00MDD95331300	CER. CAP.	330PF 50V JA	CCUS1H331JA
XM	C620	/U1B	nsp	00MDD95331300	CER. CAP.	330PF 50V JA	CCUS1H331JA
XM	C621	/U1B	nsp	00MDD95331300	CER. CAP.	330PF 50V JA	CCUS1H331JA
XM	C622	/U1B	nsp	00MDD95331300	CER. CAP.	330PF 50V JA	CCUS1H331JA
XM	C623	/U1B	nsp	00MOA10605020	ELECT CAP.	10UF 50V	CCEA1HH100T
XM	C624	/U1B	nsp	00MOA10605020	ELECT CAP.	10UF 50V	CCEA1HH100T
XM	C631	/U1B	nsp	00MDK96104300	CER. CAP.	0.1UF 50V ZF	CCUS1H104ZF
XM	C632	/U1B	nsp	00MDK96104300	CER. CAP.	0.1UF 50V ZF	CCUS1H104ZF
XM	C633	/U1B	nsp	00MOA10605020	ELECT CAP.	10UF 50V	CCEA1HH100T
XM	C634	/U1B	nsp	00MOA10605020	ELECT CAP.	10UF 50V	CCEA1HH100T
XM	C801	/U1B	nsp	00MOA10701620	ELECT CAP.	100UF 16V	CCEA1CH101T
XM	C803	/U1B	nsp	00MOA10701620	ELECT CAP.	100UF 16V	CCEA1CH101T
XM	C811	/U1B	nsp	00MOA10701620	ELECT CAP.	100UF 16V	CCEA1CH101T
XM	C812	/U1B	nsp	00MOA10701620	ELECT CAP.	100UF 16V	CCEA1CH101T
XM	C813	/U1B	nsp	00MOA10605020	ELECT CAP.	10UF 50V	CCEA1HH100T
XM	D611	/U1B	nsp	00MHZ21303210	DIODE	1SS355	CVD1SS355T
XM	D612	/U1B	nsp	00MHZ21303210	DIODE	1SS355	CVD1SS355T
XM	D615	/U1B	nsp	00MHZ21303210	DIODE	1SS355	CVD1SS355T
XM	D616	/U1B	nsp	00MHZ21303210	DIODE	1SS355	CVD1SS355T
XM	F801	/U1B	nsp	90M-FC900340R	FERRITE CORE	HU-1H4516-600JT	HLZ9Z014Z
XM	F802	/U1B	nsp	90M-FC900340R	FERRITE CORE	HU-1H4516-600JT	HLZ9Z014Z
XM	F803	/U1B	nsp	90M-FC900460R	EMI FILTER	CHIP BEAD (EMC FILTER)	CLZ9R007Z
XM	F811	/U1B	nsp	90M-FC900460R	EMI FILTER	CHIP BEAD (EMC FILTER)	CLZ9R007Z
XM	IC51	/U1B	nsp	00D2623517907	IC	F2602-01-TR	CVI00D2623517907
XM	IC61	/U1B	nsp	00MHC10025880	IC	CS4392KZZ	HVICS4392KZZ
XM	IC62	/U1B	nsp	00MHC10102090	IC	NJM2068MD-TE1	HVINJM2068MDTE1
XM	J501	/U1B	nsp	00D2051362009	TERMINAL	CAM-D96	CJJ9L006Z
XM	J502	/U1B	nsp	nsp	BRACKET	BRACKET FOR PWB	CMD1A569
XM	J503	/U1B	nsp	nsp	BRACKET	BRACKET FOR PWB	CMD1A569
XM	J511	/U1B	nsp	nsp	CONN.	15P CARD CABLE	CJP15GA115ZY
XM	J801	/U1B	nsp	nsp	CONN.	2PIN CJP02GA19ZY	CJP02GA19ZY
XM	L501	/U1B	nsp	00MFN21000080	EMI FILTER	DLW21HN121SQ2L	CLZ9R008Z
XM	Q613	/U1B	nsp	90M-HT300970R	TRS.	KTC2875B	HVTKTC2875B
XM	Q614	/U1B	nsp	90M-HT300970R	TRS.	KTC2875B	HVTKTC2875B
XM	Q615	/U1B	nsp	90M-HT300970R	TRS.	KTC2875B	HVTKTC2875B
XM	Q616	/U1B	nsp	90M-HT300970R	TRS.	KTC2875B	HVTKTC2875B
XM	Q617	/U1B	nsp	90M-BA001620R	CHIP TRS.	KRC103S	CVTKRC103S
XM	Q618	/U1B	nsp	90M-BA001620R	CHIP TRS.	KRC103S	CVTKRC103S
XM	Q619	/U1B	nsp	90M-BA001630R	CHIP TRS.	KRA103S	CVTKRA103S
XM	Q620	/U1B	nsp	90M-BA001630R	CHIP TRS.	KRA103S	CVTKRA103S
XM	Q801	/U1B	nsp	00MHC98520320	IC	PQ20VZ51	CVIPQ20VZ51
XM	Q811	/U1B	nsp	90M-HC300940R	IC	LM1117-ADJ	HVILM1117S-ADJ
XM	R501	/U1B	nsp	00MNN05104610	CHIP RES.	100K OHM 1/10W J	CRJ10DJ104T
XM	R502	/U1B	nsp	00MNN05104610	CHIP RES.	100K OHM 1/10W J	CRJ10DJ104T
XM	R503	/U1B	nsp	00MNN05104610	CHIP RES.	100K OHM 1/10W J	CRJ10DJ104T
XM	R504	/U1B	nsp	00MNN05104610	CHIP RES.	100K OHM 1/10W J	CRJ10DJ104T
XM	R505	/U1B	nsp	00MNN05223610	CHIP RES.	22K OHM 1/10W J	CRJ10DJ223T
XM	R506	/U1B	nsp	00MNN05102610	CHIP RES.	1K OHM 1/10W J	CRJ10DJ102T
XM	R507	/U1B	nsp	00MNN05102610	CHIP RES.	1K OHM 1/10W J	CRJ10DJ102T
XM	R508	/U1B	nsp	00MNN05101610	CHIP RES.	100 OHM 1/10W J	CRJ10DJ101T
XM	R509	/U1B	nsp	00MNN05101610	CHIP RES.	100 OHM 1/10W J	CRJ10DJ101T
XM	R512	/U1B	nsp	00MNN05100610	CHIP RES.	10 OHM 1/10W J	CRJ10DJ100T
XM	R513	/U1B	nsp	00MNN05101610	CHIP RES.	100 OHM 1/10W J	CRJ10DJ101T
XM	R514	/U1B	nsp	00MNN05223610	CHIP RES.	22K OHM 1/10W J	CRJ10DJ223T
XM	R515	/U1B	nsp	00MNN05223610	CHIP RES.	22K OHM 1/10W J	CRJ10DJ223T
XM	R516	/U1B	nsp	00MNN05223610	CHIP RES.	22K OHM 1/10W J	CRJ10DJ223T
XM	R517	/U1B	nsp	00MNN05220610	CHIP RES.	22 OHM 1/10W J	CRJ10DJ220T
XM	R518	/U1B	nsp	00MNN05220610	CHIP RES.	22 OHM 1/10W J	CRJ10DJ220T
XM	R519	/U1B	nsp	00MNN05220610	CHIP RES.	22 OHM 1/10W J	CRJ10DJ220T
XM	R520	/U1B	nsp	00MNN05220610	CHIP RES.	22 OHM 1/10W J	CRJ10DJ220T
XM	R521	/U1B	nsp	00MNN05223610	CHIP RES.	22K OHM 1/10W J	CRJ10DJ223T
XM	R522	/U1B	nsp	00MNN05223610	CHIP RES.	22K OHM 1/10W J	CRJ10DJ223T

NOTE : "nsp" PART IS LISTED FOR REFERENCE ONLY, MARANTZ WILL NOT SUPPLY THESE PARTS.

P.W.B. NAME	POS. NO.	VERS. COLOR	PART NO. (FOR EUR)	PART NO. (MZ)	PART NAME	DESCRIPTION	
XM	R523	/U1B	nsp	00MNN05223610	CHIP RES.	22K OHM 1/10W J	CRJ10DJ223T
XM	R524	/U1B	nsp	00MNN05101610	CHIP RES.	100 OHM 1/10W J	CRJ10DJ101T
XM	R525	/U1B	nsp	00MNN05101610	CHIP RES.	100 OHM 1/10W J	CRJ10DJ101T
XM	R526	/U1B	nsp	00MNN05101610	CHIP RES.	100 OHM 1/10W J	CRJ10DJ101T
XM	R527	/U1B	nsp	00MNN05101610	CHIP RES.	100 OHM 1/10W J	CRJ10DJ101T
XM	R528	/U1B	nsp	00MNN05223610	CHIP RES.	22K OHM 1/10W J	CRJ10DJ223T
XM	R529	/U1B	nsp	00MNN05223610	CHIP RES.	22K OHM 1/10W J	CRJ10DJ223T
XM	R530	/U1B	nsp	00MNN05223610	CHIP RES.	22K OHM 1/10W J	CRJ10DJ223T
XM	R601	/U1B	nsp	00MNN05101610	CHIP RES.	100 OHM 1/10W J	CRJ10DJ101T
XM	R602	/U1B	nsp	00MNN05101610	CHIP RES.	100 OHM 1/10W J	CRJ10DJ101T
XM	R603	/U1B	nsp	00MNN05000610	CHIP RES.	0 OHM 1/10W J	CRJ10DJ0R0T
XM	R605	/U1B	nsp	00MNN05103610	CHIP RES.	10K OHM 1/10W J	CRJ10DJ103T
XM	R611	/U1B	nsp	00MNN05822610	CHIP RES.	8.2K OHM 1/10W J	CRJ10DJ822T
XM	R612	/U1B	nsp	00MNN05822610	CHIP RES.	8.2K OHM 1/10W J	CRJ10DJ822T
XM	R613	/U1B	nsp	00MNN05822610	CHIP RES.	8.2K OHM 1/10W J	CRJ10DJ822T
XM	R614	/U1B	nsp	00MNN05822610	CHIP RES.	8.2K OHM 1/10W J	CRJ10DJ822T
XM	R615	/U1B	nsp	00MNN05332610	CHIP RES.	3.3K OHM 1/10W J	CRJ10DJ332T
XM	R616	/U1B	nsp	00MNN05332610	CHIP RES.	3.3K OHM 1/10W J	CRJ10DJ332T
XM	R617	/U1B	nsp	00MNN05332610	CHIP RES.	3.3K OHM 1/10W J	CRJ10DJ332T
XM	R618	/U1B	nsp	00MNN05332610	CHIP RES.	3.3K OHM 1/10W J	CRJ10DJ332T
XM	R619	/U1B	nsp	00MNN05822610	CHIP RES.	8.2K OHM 1/10W J	CRJ10DJ822T
XM	R620	/U1B	nsp	00MNN05822610	CHIP RES.	8.2K OHM 1/10W J	CRJ10DJ822T
XM	R621	/U1B	nsp	00MNN05822610	CHIP RES.	8.2K OHM 1/10W J	CRJ10DJ822T
XM	R622	/U1B	nsp	00MNN05822610	CHIP RES.	8.2K OHM 1/10W J	CRJ10DJ822T
XM	R623	/U1B	nsp	00MNN05101610	CHIP RES.	100 OHM 1/10W J	CRJ10DJ101T
XM	R624	/U1B	nsp	00MNN05101610	CHIP RES.	100 OHM 1/10W J	CRJ10DJ101T
XM	R625	/U1B	nsp	00MNN05473610	CHIP RES.	47K OHM 1/10W J	CRJ10DJ473T
XM	R626	/U1B	nsp	00MNN05473610	CHIP RES.	47K OHM 1/10W J	CRJ10DJ473T
XM	R627	/U1B	nsp	00MNN05221610	CHIP RES.	220 OHM 1/10W J	CRJ10DJ221T
XM	R628	/U1B	nsp	00MNN05221610	CHIP RES.	220 OHM 1/10W J	CRJ10DJ221T
XM	R629	/U1B	nsp	00MNN05221610	CHIP RES.	220 OHM 1/10W J	CRJ10DJ221T
XM	R630	/U1B	nsp	00MNN05221610	CHIP RES.	220 OHM 1/10W J	CRJ10DJ221T
XM	R631	/U1B	nsp	00MNN05222610	CHIP RES.	2.2K OHM 1/10W J	CRJ10DJ222T
XM	R632	/U1B	nsp	00MNN05222610	CHIP RES.	2.2K OHM 1/10W J	CRJ10DJ222T
XM	R633	/U1B	nsp	00MNN05222610	CHIP RES.	2.2K OHM 1/10W J	CRJ10DJ222T
XM	R634	/U1B	nsp	00MNN05222610	CHIP RES.	2.2K OHM 1/10W J	CRJ10DJ222T
XM	R635	/U1B	nsp	00MNN05474610	CHIP RES.	470K OHM 1/10W J	CRJ10DJ474T
XM	R636	/U1B	nsp	00MNN05474610	CHIP RES.	470K OHM 1/10W J	CRJ10DJ474T
XM	R801	/U1B	nsp	00MNM13901020	CHIP RES.	3.9KOHM/1608/1%	CRJ10DF3901T
XM	R802	/U1B	nsp	00MNM11201020	CHIP RES.	1.2KOHM/1608/1%	CRJ10DF1201T
XM	R803	/U1B	nsp	00MNM1180G020	CHIP RES.	18OHM/1608/1%	CRJ10DF18R0T
XM	R804	/U1B	nsp	00MNN05103610	CHIP RES.	10K OHM 1/10W J	CRJ10DJ103T
XM	R811	/U1B	nsp	00MNM12200020	CHIP RES.	220 OHM 1%	CRJ10DF2200T
XM	R812	/U1B	nsp	00MNM11800020	CHIP RES.	180 OHM 1%	CRJ10DF1800T
XM	R813	/U1B	nsp	00MNM11800020	CHIP RES.	180 OHM 1%	CRJ10DF1800T
XM	X501	/U1B	nsp	00D2623516908	X'TAL	45.1584 MHZ	COX45158ISCR

NOTE : "nsp" PART IS LISTED FOR REFERENCE ONLY, MARANTZ WILL NOT SUPPLY THESE PARTS.

14. ABOUT REPLACE THE MICROPROCESSOR WITH A NEW ONE

When replaced of the U-PRO (Microprocessor) or the Flash ROM, confirm contents of the following.

PWB Name	Pos. No.	Description	After replaced	Remark
DSP	IC17	HD64F2506 SR8001	**B**	
DSP	IC34	M29W800DT70N SR8001	**B**	
DHMI	IC90	HD64F36087HV SR8001	**B**	

After replaced

A : Mask ROM (With software). No need write-in of software to the microprocessor.

B : Flash ROM (With software). Usually, no need write-in of software. But, when the software was updated, you should be write-in of the new software to the microprocessor or flash ROM. Please check the software version.

C : Empty Flash ROM (Without software). You should be write-in of the software to the microprocessor or flash ROM. Refer to "Update procedure" or "writing procedure", when you should be write-in the software.

マイコン等を交換した場合の対応について

U-PRO(マイコン)およびFlash ROM等を交換した場合の対応方法を下記の記載します。

PWB Name	Pos. No.	Description	交換時の対応	備考
DSP	IC17	HD64F2506 SR8001	**B**	
DSP	IC34	M29W800DT70N SR8001	**B**	
DHMI	IC90	HD64F36087HV SR8001	**B**	

交換時の対応

A : Mask ROM (ソフトウェア書き込み済み)　交換時にソフトウェアの書き込みは必要ありません。

B : Flash ROM (ソフトウェア書き込み済み)　バージョンアップにより交換時にソフトウェアの書き換えが必要な場合があります。バージョンの確認をしてください。

C : 空ROM (Flash ROM) 交換時必ずソフトウェアの書き込みが必要になります。Update、書き込み方法を参照してください。