SERVICE MANUAL

TA-71/TA-71L TA-52/TA-52L

marantz®

model TA-71/TA-71L/TA-52/TA-52L

Stereo System Component

MARANTZ DESIGN AND SERVICE

Using superior design and selected high grade components, MARANTZ company has created the ultimate in stereo sound. Only **original MARANTZ parts** can insure that your MARANTZ product will continue to perform to the specifications for which it is famous.

Parts for your MARANTZ equipment are generally available to our National Marantz Subsidiary or Agent.

ORDERING PARTS:

Parts can be ordered either by mail or by telex. In both cases, MARANTZ part number has to be specified. If you order by mail, fulfil MARANTZ order forms.

MARANTZ TRADING S.A.
326 Avenue Louise Bte 32
1050 Brussels
Belgium

MARANTZ NATIONAL PARTS DEPARTMENT
20525 Nordhoff Street
Chatsworth, California 91311
Phone: 1-800-423-5108
Phone: 1-213-998-9333

The following information must be supplied to eliminate delays in processing your order:

1. Complete address
2. Complete part numbers and quantities required
3. Description of parts
4. Model number for which part is required
5. Way of shipment
6. Signature: any order form or telex must be signed otherwise such part order will be considered as null and void.

PARTS ORDERING:

Parts may be ordered from the following addresses:

EUROPE

MARANTZ EUROPE
326 Avenue Louise Bte 32
1050 Brussels
Belgium

MARANTZ TRADING S.A.
326 Avenue Louise Bte 32
1050 Brussels
Belgium

AUSTRIA
HORNYPHON
Vertriebsgesellschaft GmbH
Wienerbergstrasse 1
A 1101 Wien
Austria

BELGIUM
SVD DIVISION MARANTZ
Industrialaan 1
B 1720 Groot-Bijgaarden
Belgium

DENMARK
MARANTZ
Division of Philips Service A/S
Prags Boulevard 80
Postbox 1919
DK 2300 København S
Denmark

FINLAND
MARANTZ
Division of Oy Philips Ab
Kaivokatu 8
00100 Helsinki
Finland

FRANCE
MARANTZ FRANCE
4 Rue Bernard Palissy
F 92600 Asnières
France

GERMANY
MARANTZ GERMANY GmbH
Max-Planck-Strasse 22
D 6072 Dreieich 1
Germany

GREAT BRITAIN
MARANTZ AUDIO U.K. Ltd
Unit 15/16
Saxon Way Industrial Estate
Moor Lane
Harmondsworth UB7 OLW
Great Britain

GREECE
ADAMCO S.A.
P.O. Box 21025
Ippocratus Street 188
Athens 11410
Greece

ITALY
MARANTZ ITALIANA S.p.A.
Via Monte Napoleone 10
I 20121 Milano
Italy

THE NETHERLANDS
MARANTZ
De limiet 3
NL 4131 NR Vianen
The Netherlands

NORWAY
MARANTZ
Division of Philips A/S
Sandstuveien 40
Oslo 6
Norway

SPAIN
PHONO S.A.
Ignacio Iglesias 10
Barcelona (Badalona)
Spain

SWEDEN
MARANTZ
Division of Philips Försäljning AB
Tegeluddsvägen 1
S115 84 Stockholm
Sweden

SWITZERLAND
DYNAVOX ELECTRONICS
Route de Villars 105
CH 1701 Fribourg
Switzerland

TURKEY
DOGRUOL LTD
I.M.C
6 Blok Nº 6310
Unkapani
Istanbul
Turkey

YUGOSLAVIA
VELEBIT OOUR
Inoz Zastupstva
Babukiceva 3A
P.O. Box 1044
41000 Zagreb
Yugoslavia

AUSTRALIA

MARANTZ AUSTRALIA PTY.,LTD.
19 Chard Road
Brookvale, NSW 2100
Australia
Telex: 24121

U.S.A.

MARANTZ COMPANY, INC.
National Service Dept.
P.O. Box 577
Chatsworth, CA 91311
U.S.A.
Telex: 4720284

JAPAN

MARANTZ JAPAN, INC.
35-1, 7-chome, Sagamiono
Sagamihara-shi, Kanagawa
Japan
Telex: 22878

All of the above locations are fully equipped to take care of your total service needs. Because various countries have differing configuration requirements, it is necessary that you contact the service facility in your particular country. In the event that there is no service location listed for your country, please, contact the nearest facility for the necessary assistance.

> In case of difficulties, do not hesitate to contact the Technical Department at abovementioned address.

NOTE—FOR U.S.A. ONLY

Parts for your MARANTZ stereo are generally available within 72 hours throughout the nation via a toll-free line to our National Parts Depot in California. The sales professionals who take your call immediately refer to their own desk top computer terminal and can quickly determine the availability and price information you require. If, for some reason, your order should exceed our available stock, we usually can instantly provide an alternate replacement part or current delivery information. When the order is placed and confirmed, the computer simultaneously generates "hard copy" orders at the distribution center. As hard copies come directly from the computer to the national parts depot, your requested stock is assembled and prepared for shipment and placed on the first available carrier for delivery to you.

Phone orders will eliminate mail delays, and we encourage the use of this method. If you order by mail, use MARANTZ parts order forms which are available from MARANTZ NATIONAL PARTS DEPARTMENT.

marantz®

TABLE OF CONTENTS

How to use this service manual

- The "Common parts" which Marantz Japan, Inc. has established are eliminated from this service manual.
- These "Common parts" are applied to all models in the service manuals arranged and issued by MJI.
- To indicate clearly the common parts in the schematic diagram, a line is drawn above or under the Ref. Desig. No. of applicable parts.
- "Common parts" can be supplied from the Marantz service center as ever.
  In case of ordering, please establish the parts number of 10 figures following the procedure mentioned in this service manual "How to establish the parts number for common parts".

(NOTE)

When you order parts to the Marantz parts center, please take notice of the following points.

1) Please correctly write the parts number of 10 figures following the rule.
2) Since ordering parts by the Ref. Desig. No. or ratings indicated in the schematic diagram does not satisfy the above conditions, the Marantz parts supply system does not work properly.
   As this case is apt to cause a trouble, please pay attention to it.

MARANTS MODEL TA-71/TA-71L/TA-52/TA-52L STEREO SYSTEM COMPONENT

INTRODUCTION

This service manual was prepared for use by Authorized Warranty Stations and contains service information for the Marantz Model TA-71/TA-71L/TA-52/TA-52L Stereo System Components.

Servicing information and voltage data included in this manual are intended for use by knowledgeable and experienced personnel only. All instructions should be read carefully. No attempt should be made to proceed without a good understanding of circuitry operation.

The parts list furnishes complete ordering information. Most replacement parts should be ordered from the Marantz Company. However, a simple description is included for parts which can be obtained locally.

1. SHOCK, FIRE HAZARD SERVICE TEST

CAUTION: After servicing this appliance and prior to returning to customer, measure the resistance between either primary AC cord connector pins (with unit NOT connected to AC mains and its Power switch ON), and the face or Front Panel of product and controls and chassis bottom.

Any resistance measurement less than 1 Megohms should cause unit to be repaired or corrected before AC power is applied, and verified before return to user/customer.

Ref. UL Standard No. 1270. Para. 66. 3. D (Mandatory Test after servicing Electrical Appliances, effective 7-1-83).

2. P.W. BOARDS

As can be seen from the circuit diagram the chassis of Model TA-71/TA-71L/TA-52/TA-52L consists of the following units. Each unit mounted on a printed circuit board is described within the square enclosed by a bold dotted line on the circuit diagram.

1. **Tuner . . . . . mounted on P.W. Board P104**
2. **Function . . . . . mounted on P.W. Board P404**
3. **Main/Power Supply . . mounted on P.W. Board P704**
4. **Tuner Tact Switch . . mounted on P.W. Board PC54**
5. **Graphic EQ . . . . . mounted on P.W. Board PF04**
6. **Graphic EQ Volume . mounted on P.W. Board PF54**
7. **Volume Control . . . . mounted on P.W. Board PG54**
8. **Power Switch . . . . . mounted on P.W. Board PP04**
9. **LCD control . . . . . mounted on P.W. Board PU04**
10. **Remote Buffer . . . . . mounted on P.W. Board PU54**
11. **Remote Pause . . . . . mounted on P.W. Board PU94**
12. **Speaker Switch . . . . mounted on P.W. Board PW94**
13. **Lamp . . . . . mounted on P.W. Board PZ04**

3. TEST EQUIPMENT REQUIRED FOR SERVICING

This table lists the test equipment required for servicing the Model TA-71/TA-71L/TA-52/TA-52L Stereo System Component.

Item	Use
AM Signal Generator	Signal source for AM alignment
Test Loop	Use with AM Signal Generator
FM Signal Generator	Signal sorce for FM alignment
MPX Signal Generator	Stereo separation alignment and trouble shooting
Distortion Analyzer	Distortion measurements
Audio Oscillator	Sinewave and squarewave signal source
AC VTVM	Voltage measurements (AC)
Oscilloscope	Waveform analysis trouble shooting
Frequency Counter	MPX Oscillator adjustment (VCO)
Circuit Tester	Trouble shooting
DC VTVM	Voltage measurements (DC)
AC Wattmeter	Monitors primary power to tuner
Line Voltmeter	Monitors potential of primary power to tuner
Variable Autotransformer	Adjusts level of primary power to tuner
Shorting Plug	Shorts amplifier Input to eliminate nois pickup

4. TUNER ALIGNMENT PROCEDURES

A dummy resistor of 47 kohms must be connected across the tuner output terminals before alignment.

4.1 FM Alignment Procedures (Function switch in the "FM" position, MODE switch in the MONO position.)

1. FM RF Alignment

Step	Signal Source Connection	Signal Frequency	Indicator Connection	Set the Digital Readout Frequency	Adjust:
1	FM signal generator to FM antenna terminal (300Ω) through matching network Set the SG RF output level so that some noise can be observed on the upper and lower side of the output waveform.	98.00 MHz	VTVM to L or R channel output (JS02)	98.00 MHz	FRONT END IFT (A101: GRY COIL) for maximum output and minimum distortion.
2	FM signal generator 1 mV output to FM antenna terminal (300Ω) through matching network Modulation Level DIN 40 kHz DEV. IHF 75 kHz DEV.	98.00 MHz	"O" center meter or DC current meter in 100 μA range between (TP201)	98.00 MHz	L201 (Primary) core so that the meter indicates its center or may read "O".
3	FM signal generator 1 mV output to FM antenna terminal (300Ω) through matching network.	98.00 MHz	Distortion meter to L or R channel output (JS02)	98.00 MHz	L201 (Secondary) core for minimum distortion.

4.2 Muting Level Alignment (Function switch in the "FM" position, MODE switch in the "AUTO STEREO" position.)

Step	Signal Source Connection	Signal Frequency	Indicator Connection	Set the Digital Readout Frequency	Adjust:
1	FM signal generator 12.5 μV output to FM antenna terminal through matching network (300 ohm, balanced)	98.00 MHz	VTVM to L or R channel output (JS02)	98.00 MHz	Adjust R219 until output is developed.

4.3 Multiplex Alignment Procedures (Function switch in the "FM" position, MODE switch in the "AUTO STEREO" position.)

Step	Signal Source Connection	Signal Frequency	Indicator Connection	Set the Digital Readout Frequency	Adjust:
1	FM signal generator 1 mV output modulated by MPX signal generator to FM antenna terminal (300Ω) through matching network Modulation Level DIN 40 kHz+8% Pilot DEV. IHF 67.5 kHz+9% Pilot DEV.	Stereo left (1,000 Hz)	VTVM to right channel output (JS02. R ch)	98.00 MHz	R307 for same separation in both channels.
2		Stereo right (1,000 Hz)	VTVM to left channel output (JS02. L ch)		

4.4 AM Alignment Procedures (Function switch in the "AM" position.)

1. AM IF Alignment

Step	Signal Source Connection	Signal Frequency	Indicator Connection	Set the Digital Readout Frequency	Adjust:
1	Sweep generator to AM Antenna Terminal.	450 kHz marker	Oscilloscope to (RA16)	———	LA05 for maximum and symmetric response.

AM RF Alignment

Step	Signal Source Connection	Signal Frequency	Indicator Connection	Set the Digital Readout Frequency	Adjust:
1	Apply the signal to the AM loop antenna from the AM signal generator using the test loop.	603 kHz (600 kHz)	VTVM to L or R channel output (JS02)	603 kHz (600 kHz)	LA01 for maximum output.
2		1,404 kHz (1,400 kHz)		1,404 kHz (1,400 kHz)	CA01 for maximum output.
3	Repeat steps 1 and 2.				

AM Signal Alignment (Function switch in the "AM" position)

Step	Signal Source Connection	Signal Frequency	Indicator Connection	Set the Digital Readout Frequency	Adjust:
1	Apply a signal to the AM loop antenna from the RF generator via the test test loop. 500μV signal	999 kHz (1000 kHz)	———	999 kHz (1000 kHz)	Adjust RA13 so that light. Tuned.

LW RF Alignment (Function in the "LW" position) TA-71L/TA-52L Only

Step	Signal Source Connection	Signal Frequency	Indicator Connection	Set the Digital Readout Frequency	Adjust:
1	Apply the signal to the AM loop antenna from the RF generator using the test loop.	272 kHz	VTVM to L or R channel output (JS02)	272 kHz	CA08 for maximum output.
2		173 kHz		173 kHz	LA03 for maximum output.
3	Repeat steps 1 and 2 as necessary to obtain maximum sensitivity.				

5. TEST AND ALIGNMENT POINTS

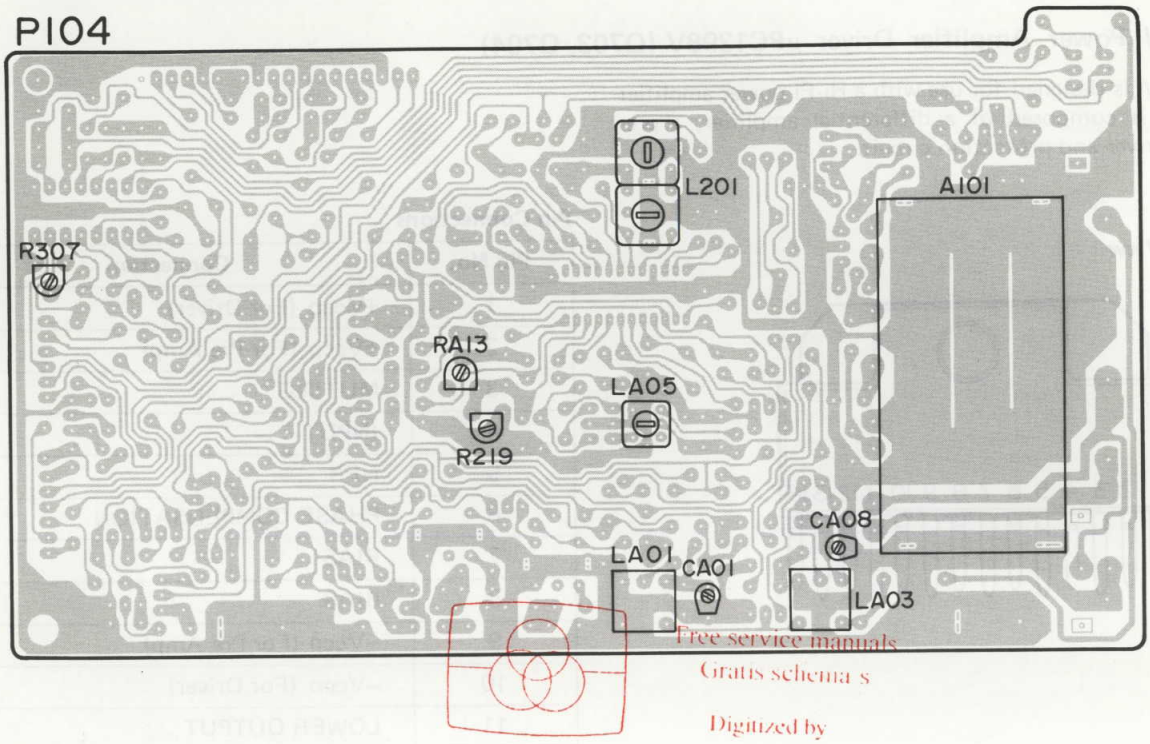

6. VOLTAGE CONVERSION

- **EUROPEAN MODEL ONLY**

To convert the unit to a different power source voltage, change the position as illustrated in the drawing below.

CAUTION
DISCONNECT POWER SUPPLY CORD FROM AC OUTLET BEFORE CONVERTING VOLTAGE.

Voltage Conversion Chart

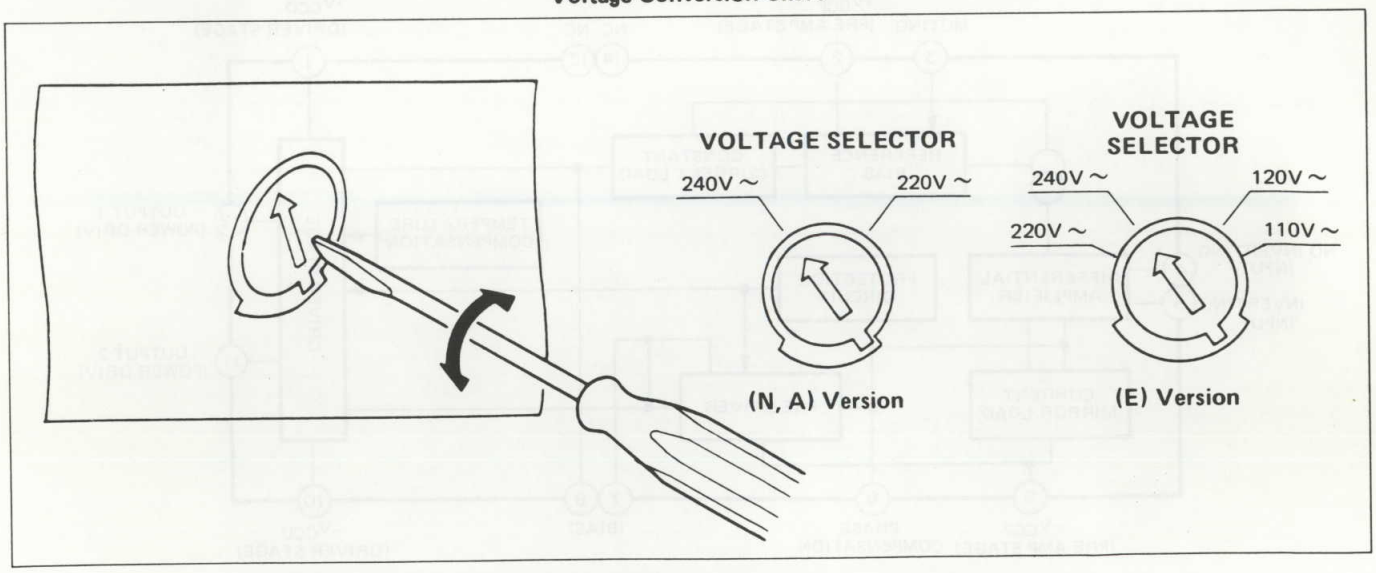

Note on safety: Symbol ⚠ Fire or electrical shock hazard. Only original parts should be used to replace any part marked with symbol ⚠. Any other component substitution (other than original type), may increase risk of fire or electrical shock hazard.

7. CIRCUIT DESCRIPTION

• 50-80W Power Amplifier Driver μPC1298V (Q703, Q704)

μPC1298V is designed for use with a Hi-Fi power amplifier driver. It is composed of a differential amplifier, a pre-driver, a driver and protection circuit.

• **Front View**

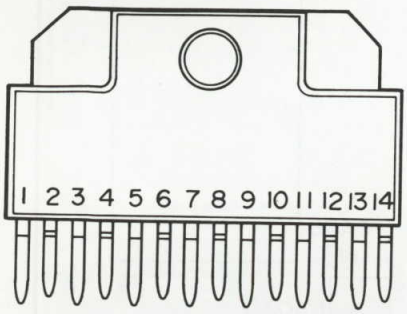

Pin Connections

Pin No.	Connection
1	+Vccd (For Driver)
2	+Vccp (For Pre Amp)
3	MUTING
4	INPUT
5	NFB
6	PHASE COMPENSATION
7	BIAS
8	BIAS
9	−Vccp (For Pre Amp)
10	−Vccd (For Driver)
11	LOWER OUTPUT
12	UPPER OUTPUT
13	NC
14	NC

• **Block Diagram**

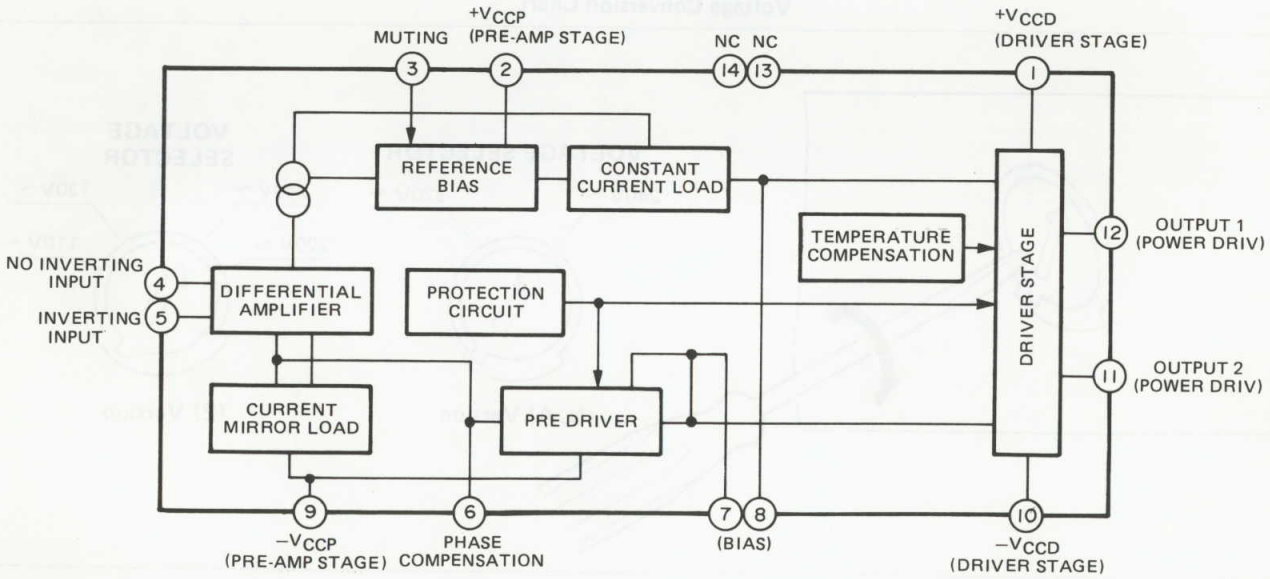

Absolute Maximum Ratings (Ta = 25°C)

Item	Symbol	Rated	Units
Supply Voltage (Quiscent)	Vcc_1	±65	V
Supply Voltage (Operational)	Vcc_2	±60	V
Circuit Current	Icc (peak)	250	mA
Allowable Package Dissipation	P_D	7.5*	W
Operating Temperature	Topt	−20 to +75	°C
Storage Temperature	Tstg	−40 to +150	°C

* Ta = 75°C
100 mm x 100 mm x 2 mm
Alminium Heat Sink

Recommended Operating Condition

Item	Symbol	MIN.	TYP.	MAX.	Units	Remarks
Supply Voltage (Operational)	Vcc_3	±36		±46	V	Power output
Input Bias Resistance	R_{IN}	1	50	100	kΩ	
Power Transistor h_{FE}	h_{FE}			50		Power output
Closed Loop Voltage Gain	Av	26	30		dB	

Electrical Characteristics (Ta = 25°C)

Item	Symbol	Test Conditions	MIN.	TYP.	MAX.	Units
Output Offset Voltage	V_{OFF}	V_{IN} = 0		±5	±50	mV
Quiscent Circuit	Icc	V_{IN} = 0		20	40	mA
Maximum Output Voltage	V_{OM}	T.H.D. = 0.05%, f = 20 Hz to 20 kHz	25	28		V
Open Loop Voltage Gain	A_{VO}	V_0 = 1.5 V, f = 1 kHz	80	95		dB
Output Noise Voltage	V_{NO}	R_G = 10 kΩ		0.07	0.14	mV
Power Band Width	P.B.W.	V_O = 1.5 V, −3 dB		900		kHz
Supply Voltage Rejection Ratio	S.V.R.	R_G = 2 kΩ, f = 100 Hz	55	70		dB

• CMOS 4-Bit 1-Chip Microprocessor w/ Built-in Prescaler, PLL, and LCD Driver MN1527KMA (QU02)

TOP VIEW

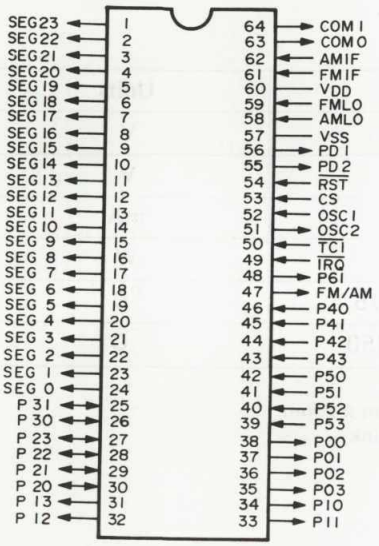

Description of Pins

Symbol	Pin Name	Pin Function
VDD:	Power supply:	Connect to +3 V to +5.5 V
Vss:	Ground:	Connect to ground (0 V)
OSC1:	Oscillator:	Connect to crystal or ceramic oscillator element. Can be used as external clock input.
OSC2:	Oscillator:	Connect to crystal or ceramic oscillator element. OSC1 to OSC2 feedback resistor mask option.
$\overline{RST}$:	Reset signal input:	Reset when "L" level input for 1 machine cycle or more. With built-in pull-up resistor, when capacitor connected with GND, power on reset is possible. Pull-up resistor mask option.
$\overline{SYNC}$: /P61	Synchronizing signal output:	Internal timing signal is output every 1 machine cycle. "L" level duty cycle is 1/4. Can be changed to output port with mask option.
$\overline{IRQ}$:	Interrupt input:	When nagative edge signal is input, program control interrupt is activated. Pull-up resistor mask option.
$\overline{TCI}$:	Counter input:	Timer counter's event counter input. Pull-up resistor mask option.
P00 to P13:	Parallel data output:	4-bit parallel data output port. "H" level upon reset.
P20 to P31:	Parallel data input/output:	4-bit parallel data input/output port. "H" level upon reset. Pull-up resistor mask option.
P40 to P53:	Parallel data input:	4-bit parallel data input port. Pull-up resistor mask option.
COM 0/ COM 1:	LCD common output:	LCD display common output pins.
S0 to S23:	LCD segment output:	LCD display segment output pins.
FMIF:	FMIF counter input:	FM station selection IF counter input pin. Internal 1/2 divider.
AMIF:	AMIF counter input:	AM station selection IF counter input pin.
FM/AM:	FM/AM band output:	FM/AM band selection output pin. FM when "H", AM when "L".
CS:	Chip select input:	IF port 63 is "L" when this input becomes "L", operation of OSC, PLL, and LCD circuits, etc., stop.
PD1/ PD2:	Phase comparator output:	Phase comparator output pins. Connect to LPF. One each for FM and AM.

Block Diagram

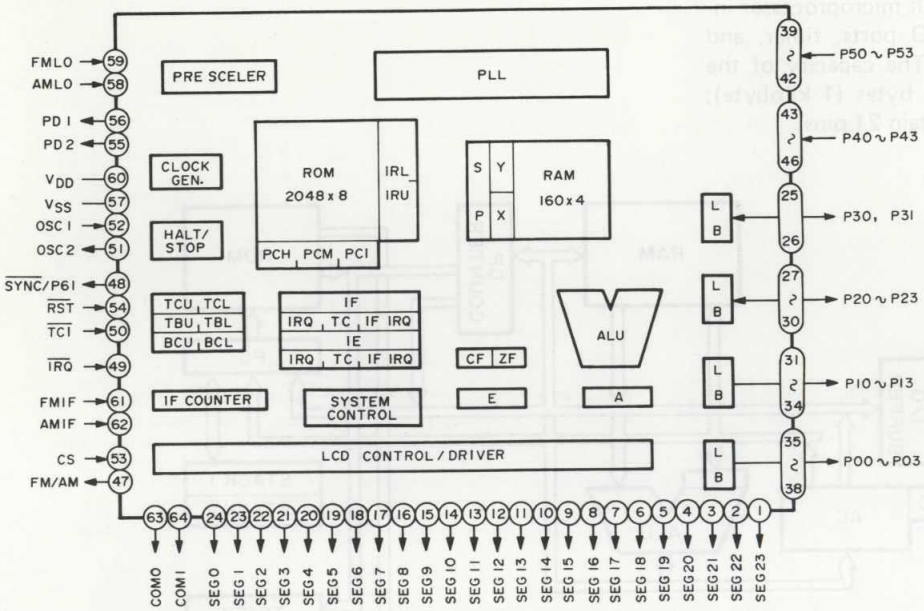

LB : Output latch buffer
CF : Carry/borrow flag
ZF : Zero flag
SX : X register/temporary register RAM address (0, 0)
SY : Y register/temporary register RAM address (0, 1)
SE : E register/temporary register RAM address (0, 2)
SP : Stack pointer (4 bits)
PC : Program counter (11 bits)
TC : Timer/counter countrol register (7 bits)
TB : Timer/counter buffer register (8 bits)
BC : Binary counter (8 bits) w/ 7-bit prescaler

Absolute Maximum Ratings Vss = 0V, Ta = 25°C

Item	Symbol	Rating	Unit
Power supply voltage	VDD	−0.3 to +9	V
Input terminal voltage	VI	Vss −0.3 to VDD +0.3	
Output terminal voltage	VO	Vss −0.3 to VDD +0.3	
Input/output terminal voltage	VIO	Vss −0.3 to VDD +0.3	
Peak output current	I OH (Peak)	−10	mA
	I CL (Peak)	30	
Average output current	I OH (avg.)	−3	
	I OL (avg.)	4	
Permissible loss	PT	400	mW

Operating temperature range	Topr.	−30 to +75	°C
Storage temperature range	Tslg.	−55 to +125	

Conditions for Operation Vss = 0V, Ta = −20 to +70°C

Item	Symbol	Condition	Allowable values			Unit
			Min	Typ	Max	
Power supply voltage	VDD1	fosc=4.5MHz, tc=3.6μs	4.5	5	5.5	V
	VDD2	When stopped	2.5		5.5	
Operating speed						
Command execution time	tc			3.6		μs
Crystal oscillator						
Crystal frequency	fXtal	VDD = 5V		4.5		MHz

• 1-chip 4-bit Control Microprocessor LM6416E (QU01)

LM6416E is an N channel MOS 4-bit microprocessor including an ROM, RAM, ALU, I/O ports, timer, and clock generator on a single chip. The capacity of the built-in memories are: ROM—1024 bytes (1 kilobyte); RAM 64 x 4 bits. The I/O ports contain 21 pins.

System Block Diagram

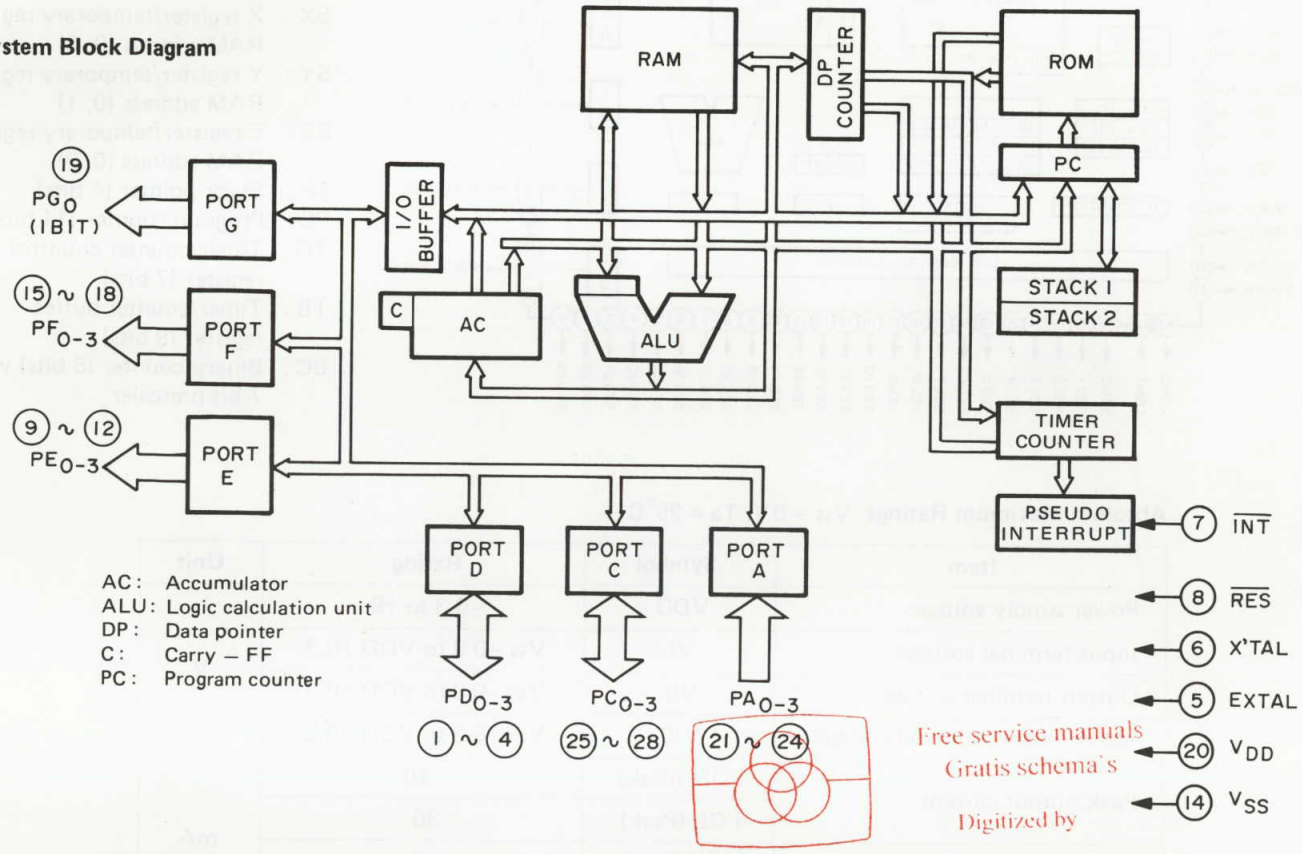

Package and Pin Names

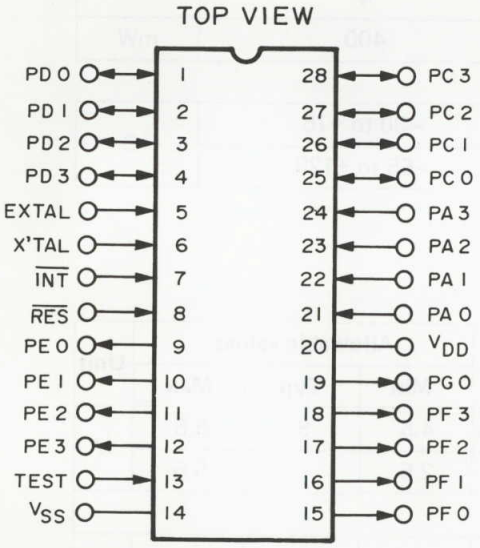

Pin Names

Xtal, EXtal :	Radiator for oscillator	
$\overline{INT}$:	Interrupt	
$\overline{RES}$:	Reset	
PA_{0-3} :	Input port	A_{0-3}
PC_{0-3} :	Input/output port	C_{0-3}
PD_{0-3} :	Input/output port	D_{0-3}
PE_{0-3} :	Output port	E_{0-3}
PF_{0-3} :	Output port	F_{0-3}
PG_0 :	Output port	G_0
TEST :	Test	

Pin Functions

Pin Name	Input/Output	Function
$\overline{INT}$:	Input :	Pseudo interrupt request input.
$\overline{RES}$:	Input :	Reset input.
PA_{0-3}	Input :	Input port A_0 to A_3; 4-bit input and bit test.
PC_{0-3}	Input/output :	Input/output port C_0 to C_3; 4-bit input and bit test during input; 4-bit output and bit setting and resetting during output, and immediate data output.
PD_{0-3}	Input/output :	Input/output port D_0 to D_3; 4-bit input and bit test during input; 4-bit output and bit setting and resetting during output, and immediate data output.
PE_{0-3}	Output :	Output port E_0 to E_3; 4-bit output and bit, setting and resetting.
PF_{0-3}	Output :	Output port F_0 to F_3; 4-bit output and bit, setting and resetting.
PG_0	Output :	Output port G_0; 1-bit output and bit setting and resetting.
Xtal :	Input/output :	Internal clock generator resonance circuit connetion; Use this pin and EXtal for connection of a ceramic radiator, CR, etc.
EXtal :	Input :	Operated by a clock supplied externally, or when using internal clock oscillator, used along with Xtal for connection of a ceramic radiator, CR, etc. (for ceramic or CR oscillation, switched by optional mask).
VDD :	Input :	Power supply, usually connected to +5 V
VSS :		Connected to power supply GND.
TEST :	Input :	LSI test, usually connected to VSS (GND)

Absolute Maximum Ratings

Item	Symbol	Conditions	Rating	Unit
Maximum power supply voltage	$V_{DD}max$		−0.3 to +8	V
Input voltage	V_{IN}	For EXtal pin, up to fre-running oscillation level allowable	−0.3 to +15	V
Output voltage	V_{OUT}	When output transistor is off	−0.3 to +15	V
Average output current (*1)	$I_{OLA}(1)$	For each of port's pins	20	mA
	$I_{OLA}(2)$	Total of C and D ports	100	mA
	$I_{OLA}(3)$	Total of E, F, and G ports	110	mA
Peak output current (*2)	$I_{OLP}(1)$	For each of port's pins	20	mA
	$I_{OLP}(2)$	Total of C and D ports	120	mA
	$I_{OLP}(3)$	Total of E, F, and G ports	130	mA
Permissible power consumption	P_{dmax}	−30 to + 70°C	400	mW
Operating temperature range	T_{opg}		−30 to +70	°C
Storage temperature range	T_{stg}		−50 to +125	°C

*1: Average current for 100 ms period. Limit for average value of any one 100 ms period.
*2: Limit not to be surpassed at any moment.

Permissible Operating Ranges Ta = –30 to +70°C, Vss = 0V

Item		Symbol	Conditions	Min	Typ	Max	Unit
Power supply voltage		V_{DD}		4.5		6.5	V
Port inputs	"H" level input voltage	$V_{IH}(1)$		$0.6V_{DD}$		13.5	V
	"L" level input voltage	$V_{IL}(1)$		V_{SS}		$0.3V_{DD}$	V
$\overline{INT}$, $\overline{RES}$	"H" level input voltage	$V_{IH}(2)$		$0.7V_{DD}$		13.5	V
	"L" level input voltage	$V_{IL}(2)$		V_{SS}		$0.3V_{DD}$	V
EXtal (Ceramic oscillator option specified)	"H" level input voltage	$V_{IH}(3)$	When external clock applied	$0.8V_{DD}$		V_{DD}	V
	"L" level input voltage	$V_{IL}(3)$	Same as above	V_{SS}		1.0	V
	Clock period	t_C (ϕ)	Same as above	1.0		10.0	μs
	"H" level clock pulse width	$t_W\phi H$	When external clock applied, Xtal open	0.3			μs
	"L" level clock pulse width	$t_W\phi L$	Same as above, Xtal open	0.47			μs
Oscillator circuit (Ceramic oscillator option specified)	Ceramic oscillator external connection resistance	RI		900	1000	1100	kΩ
	Ceramic oscillator external connection capacity	CI	EXtal side, 400 kHz	200	220	240	pF
			EXtal side, 800 kHz	200	220	240	pF
	Ceramic oscillator external connection capacity	C2	Xtal side, 400 kHz	200	220	240	pF
			Xtal side, 800 kHz	200	220	240	pF
(CR option specified)	CR oscillator external connection resistance	R2		8	10	100	kΩ
	CR oscillator external connection capacity	C3		45	68	200	pF
TEST	"L" level input voltage	$V_{IL}(4)$		V_{SS}		0.4	V

Electric Characteristics Ta = –30 to +70°C, V_{DD} = 4.5 to 6.5V, V_{SS} = 0V

Item		Symbol	Conditions	Min	Typ	Max	Unit
A port $\overline{INT}$, $\overline{RES}$	"H" level input current	$I_{IH}(1)$	V_{IN} = 13.5 V			10	μA
	"L" level input current	$I_{IL}(1)$	V_{IN} = V_{SS}	–10			μA
EXtal	"H" level input current	$I_{IH}(2)$	V_{IN} = V_{DD}			10	μA
	"L" level input current	$I_{IL}(2)$	V_{IN} = V_{SS}	–10			μA
C and D ports (Output off)	"H" level input current	$I_{IH}(3)$	V_{IN} = 13.5 V			10	μA
	"L" level input current	$I_{IL}(3)$	V_{IN} = V_{SS}	–10			μA
C, D, E, F, and G ports	"L" level input current	$I_{OL}(1)$	V_{DD} = 4.5 V V_{OL} = 1.5 V	10			mA
	Output off leakage current	$I_{OFF}(1)$	V_{OH} = 13.5 V			10	μA
CR oscillator frequency (CR oscillator option specified)		$f_{OSC}(1)$	C = 68 pF (Including allowance for board wiring, etc.) R = 10 kΩ Ta = 0 to +70°C	620	770	890	kHz
		$f_{OSC}(2)$	C = 68 pF (Including allowance for board wiring, etc.) R = 10 kΩ Ta = –30 to +70°C	620	770	960	kHz
Current consumption		$I_{DD}(1)$	With 800 kHz oscillation Output = open Ta = 0 to +70°C		17	30	mA
		$I_{DD}(2)$	With 800 kHz oscillation Output = open Ta = –30 to +70°C		17	35	mA
Input terminal capacity		C_I			10		pF

• VCO Non-adjusting PLL FM MPX Demodulator LA3410 (Q301)

LA3410 is an FM stereo tuner multiplex demodulator IC having a VCO non-adjusting function with which VCO free running frequency control is unnecessary.

TOP VIEW

Maximum Rating (Ta = 25°C)

Item	Symbol	Conditions	Rating	Unit
Maximum power supply voltage	V_{CC} max		16	V
Lamp current	I_L max		30	mA
Permissible power consumption	Pd max	TaS60°C	480	mW
Operating temperature range	Topg		–20 to +75	°C
Storage temperature range	Tstg		–10 to +120	°C

Conditions for Operation (Ta = 25°C)

Item	Symbol	Conditions	Rating	Unit
power supply voltage	Vcc		12	V
input signal voltage	V_I		300	mV
Operation power supply voltage	Vcc		6.5 to 14	V

Operational Characteristics

(Ta = 25°C, Vcc = 12V, (300mV input), f = 1kHz, L + R = 90%, PILOT = 10%)

Item	Symbol	Test Conditions	Min	Typ	Max	Unit
No signal current consumption	I_{cco}	No signal		18.5	38	mA
Input resistance	ri			20		kΩ
Power supply ripple rejection				34		dB
Channel separation	Sep		40	55		dB
Total harmonic distortion	THD	MONO		0.025	0.15	%
		MAIN		0.02	0.15	
		SUB		0.02	0.15	
Permissible input level	Vin max	THD = 1%. MONO	700			mV
Signal-to-noise ratio	S/N	MONO, Rg = 5.1K, LPF	80	88		dB
Lamp lighting level	V_L	Pilot level	4	8	17	mV
Lamp hysteresis				3		dB
Capture range				+0.8		%
				−1.2		
Output voltage	Vo	MONO *1	500	730	1000	mV
Channel balance	CB	MONO			1	dB
Carrier leak				31		dB
VCO stop voltage			5.5		Vcc-3	V

*1: Stipulated at 4 or 7 pin output voltage separation

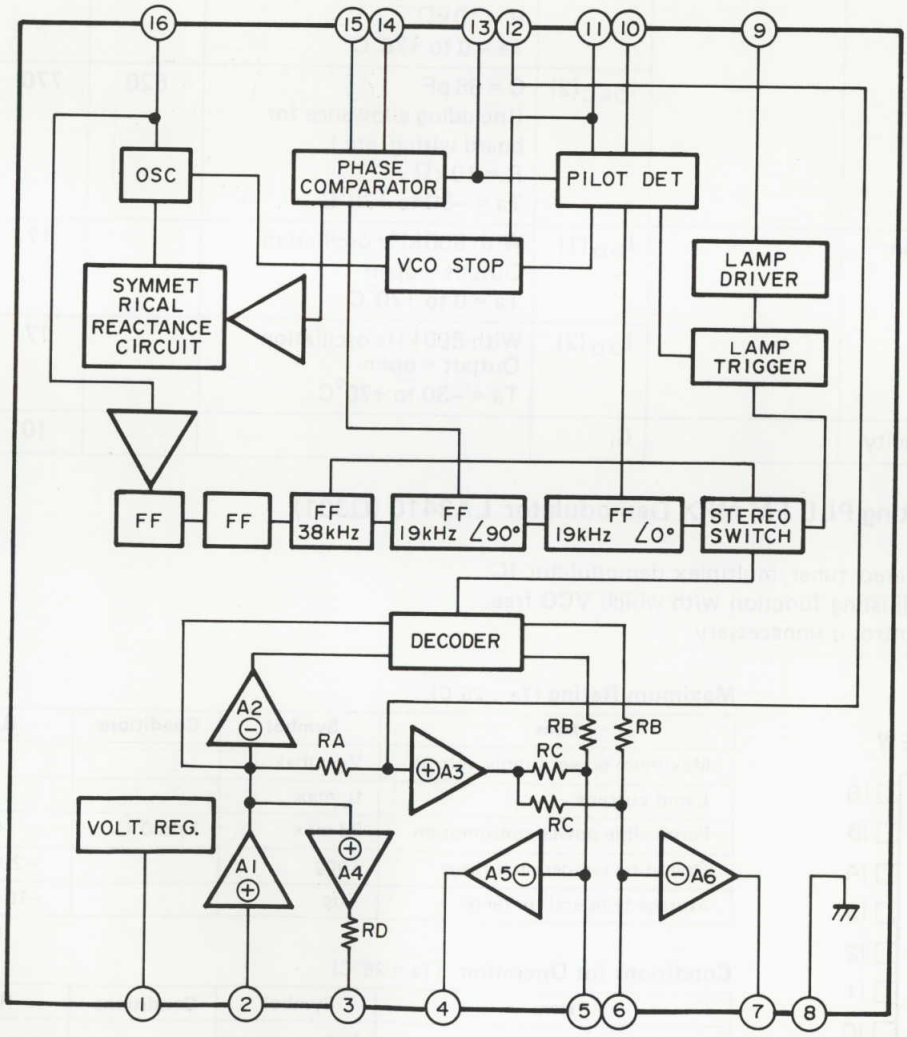

8. BLOCK DIAGRAM

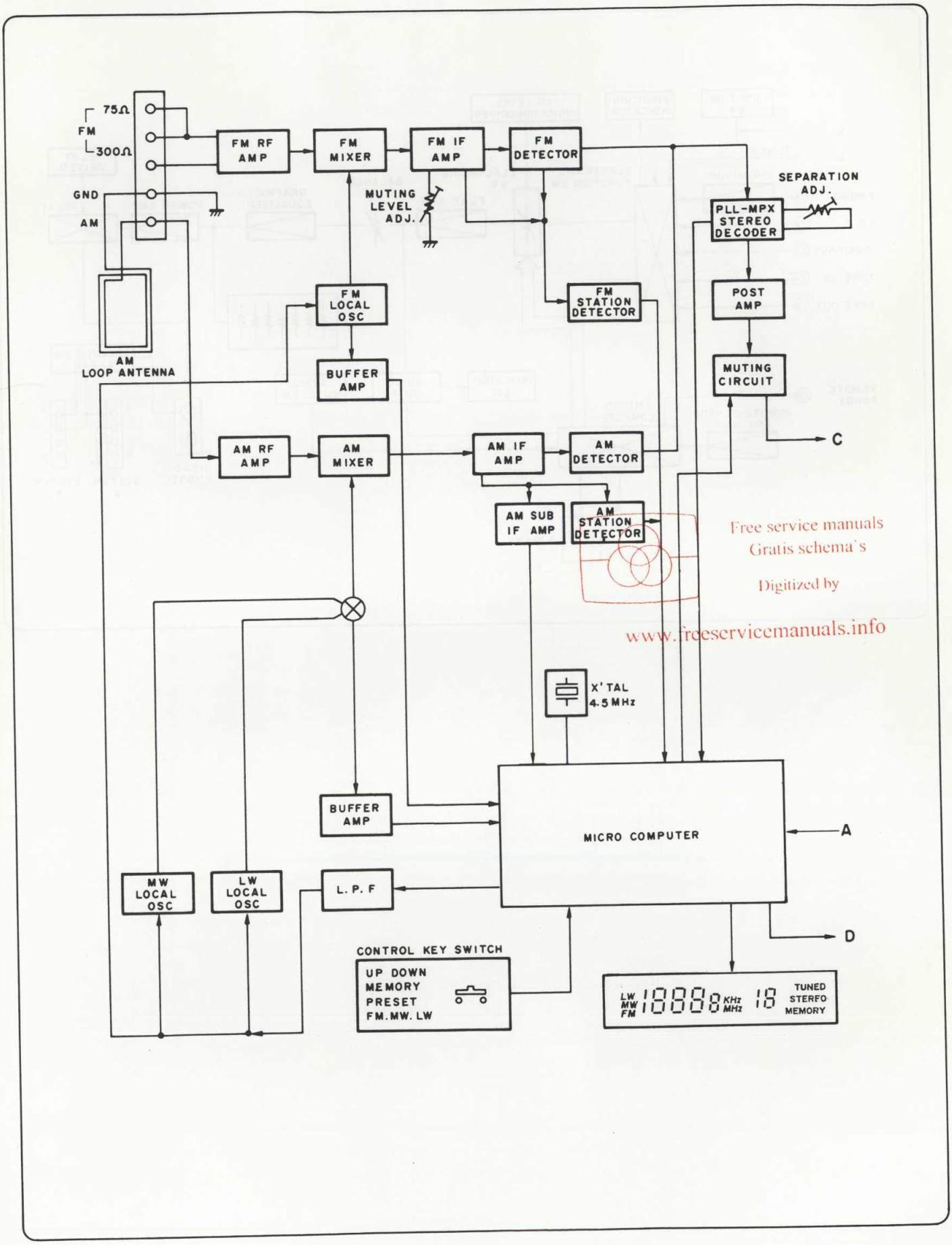

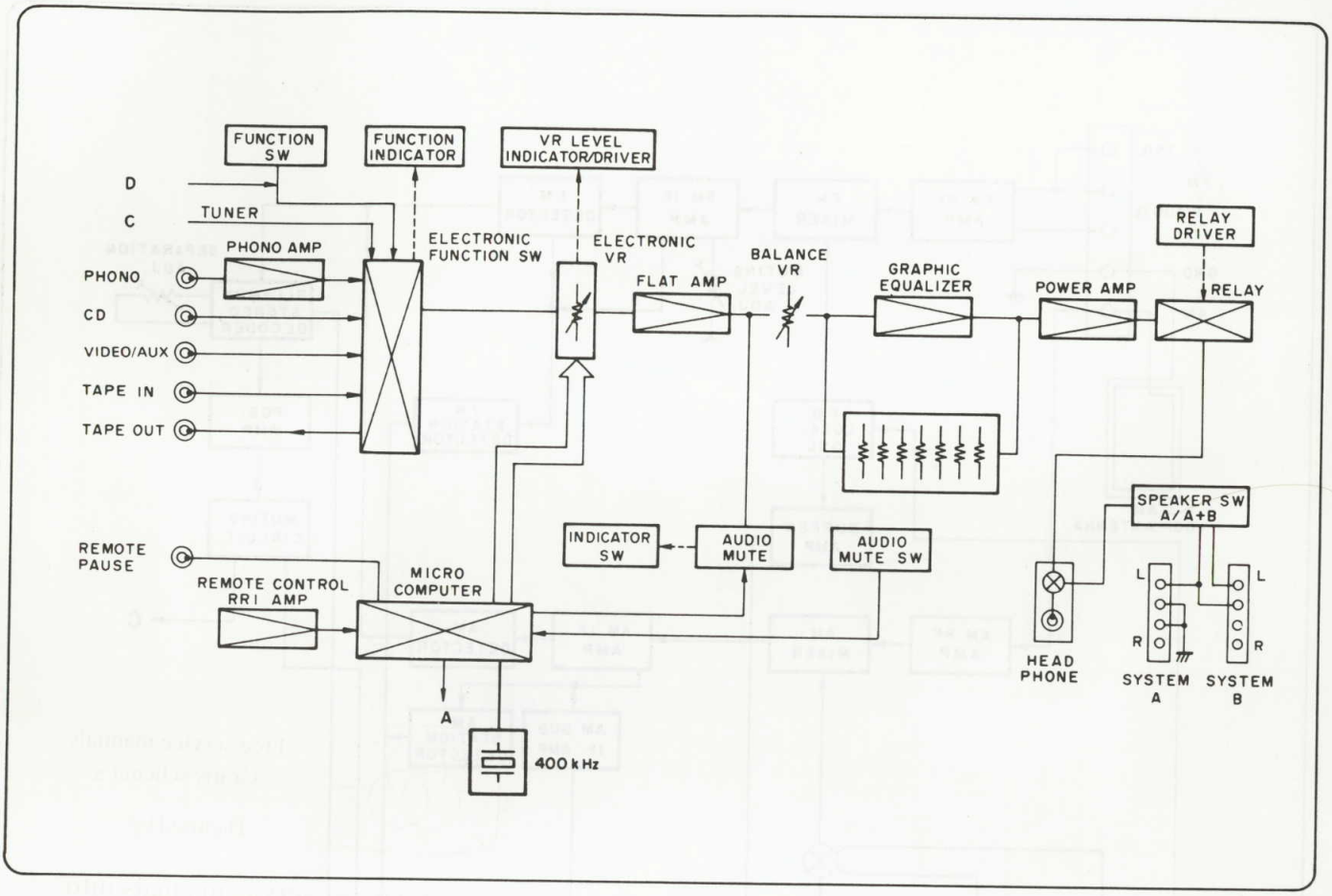

9. SCHEMATIC DIAGRAM AND COMPONENT LOCATIONS

9.1 Graphic EQ Assembly (PF04) Schematic Diagram and Component Locations

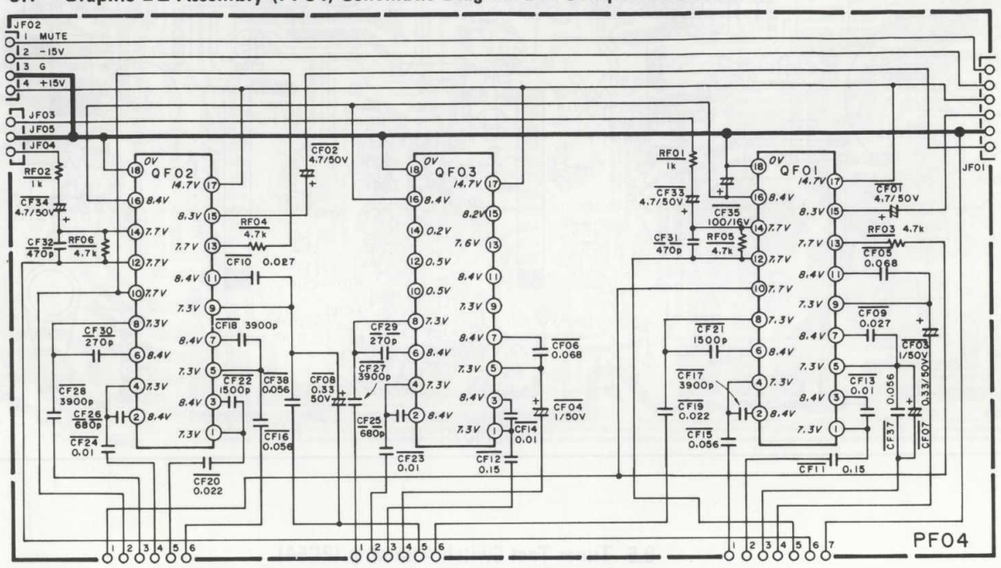

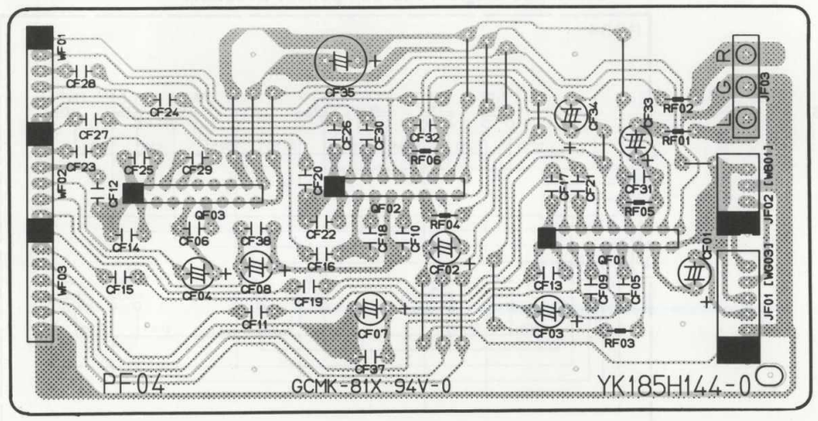

9.2 LCD Control Assembly (PU04) Schematic Diagram and Component Locations

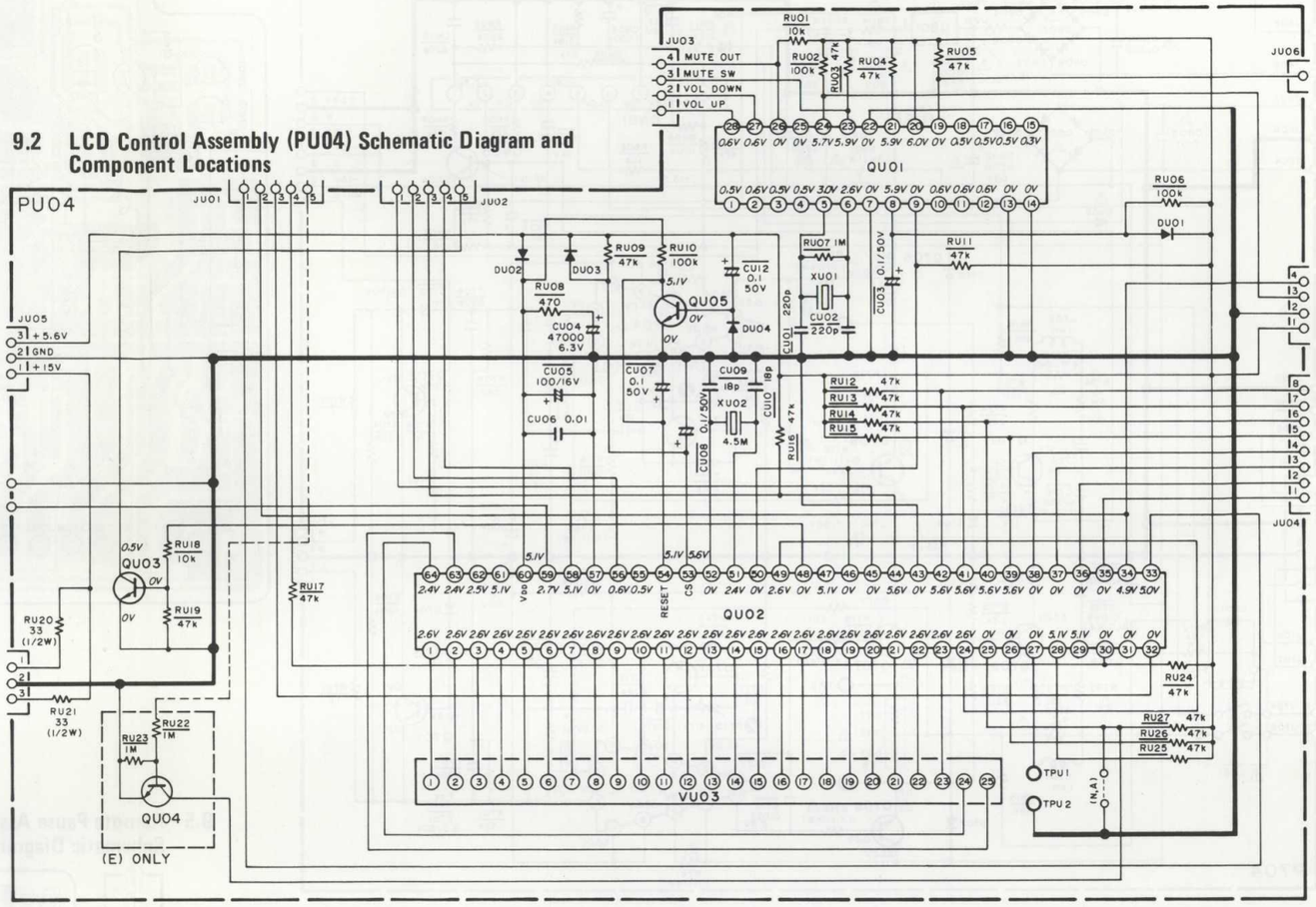

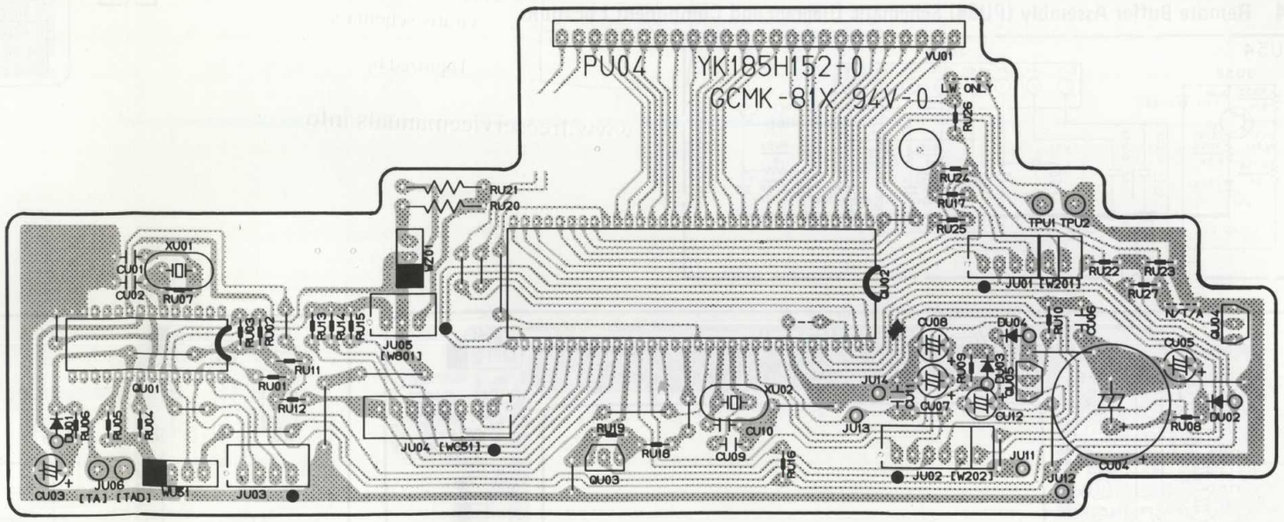

9.3 Main/Power Supply Assembly (P704) Schematic Diagram and Component Locations (TA-52/TA52L)

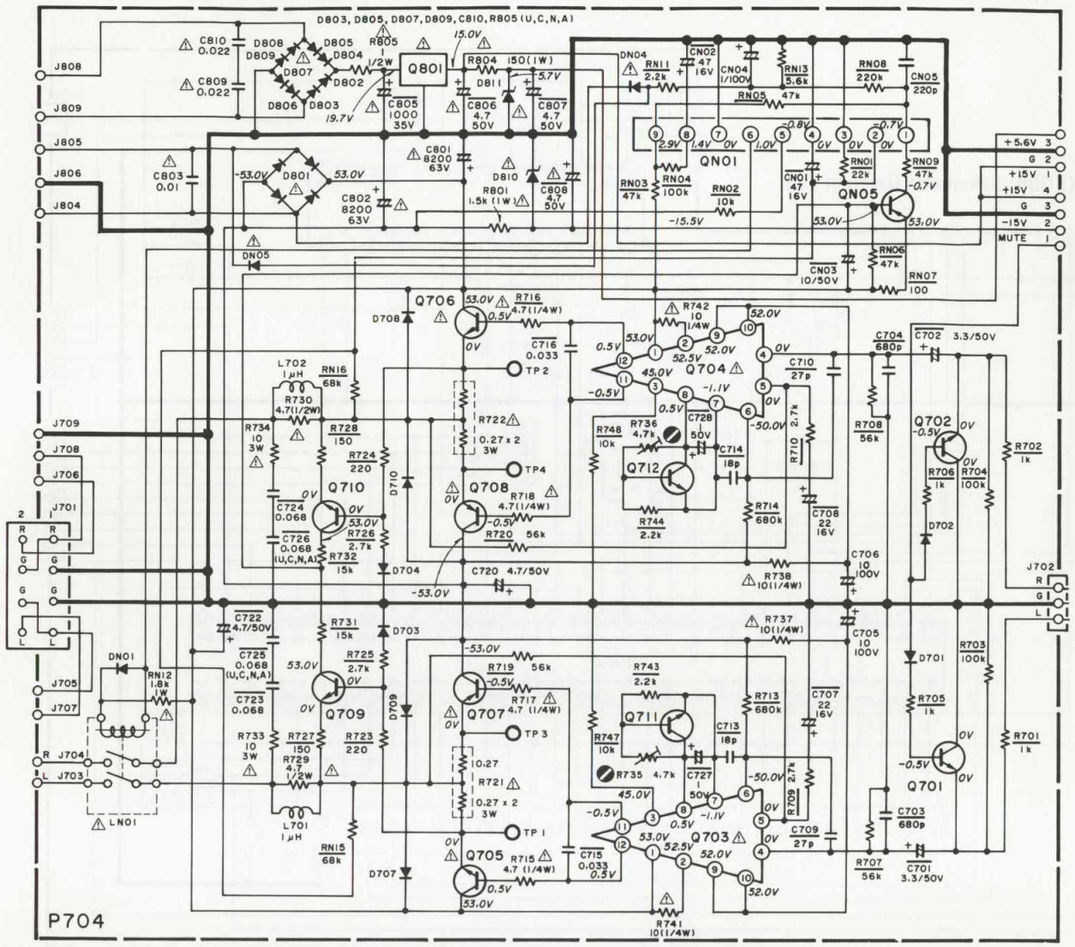

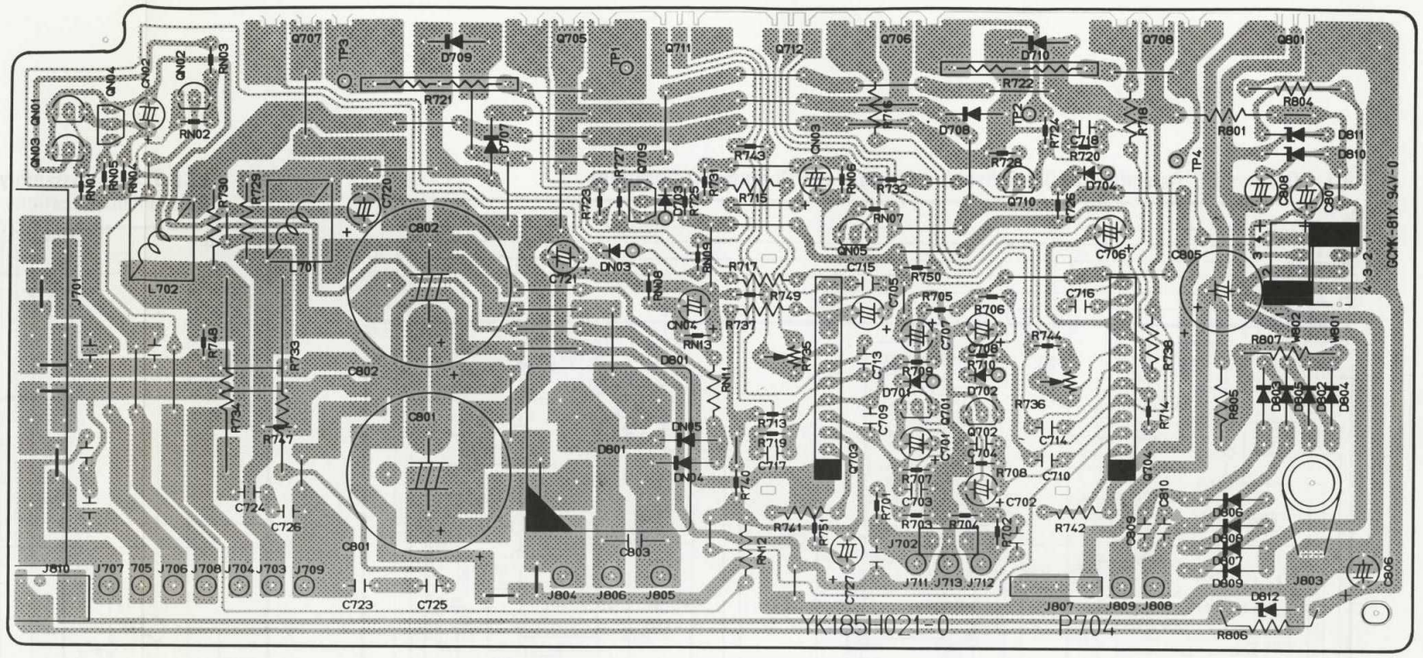

9.4 Remote Buffer Assembly (PU54) Schematic Diagram and Component Locations

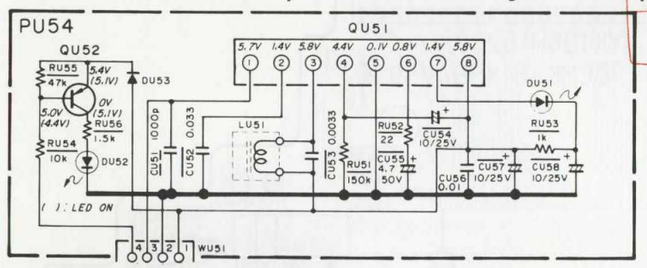

9.5 Remote Pause Assembly (PU94) Schematic Diagram and Component Locations

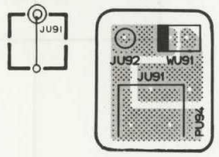

9.6 Tuner Tact Switch Assembly (PC54) Schematic Diagram and Component Locations

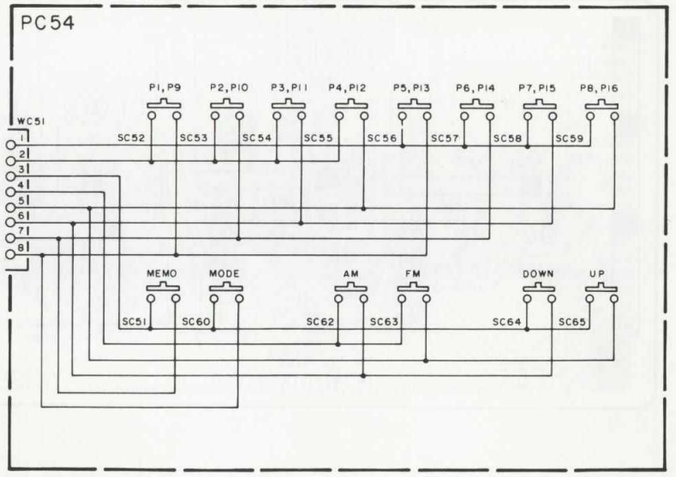

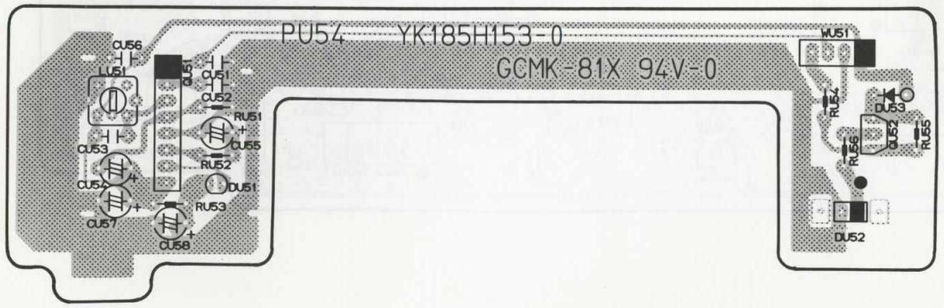

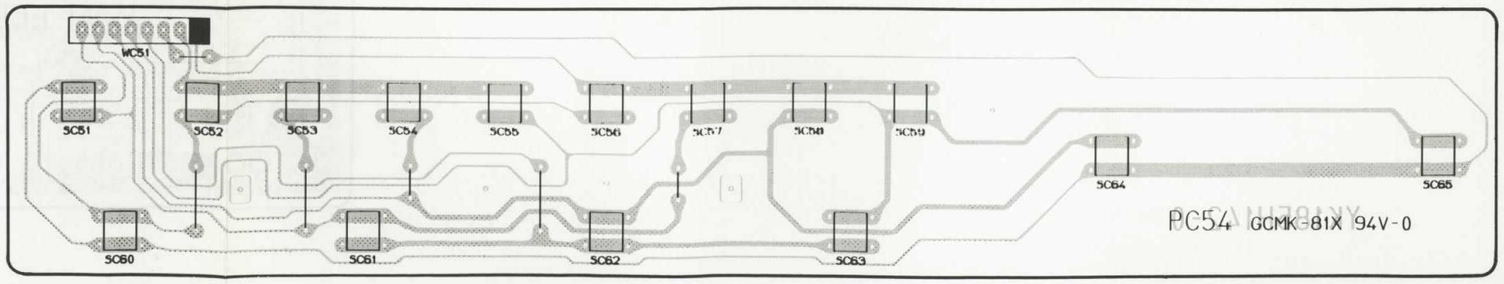

(TA-71/TA-71L)

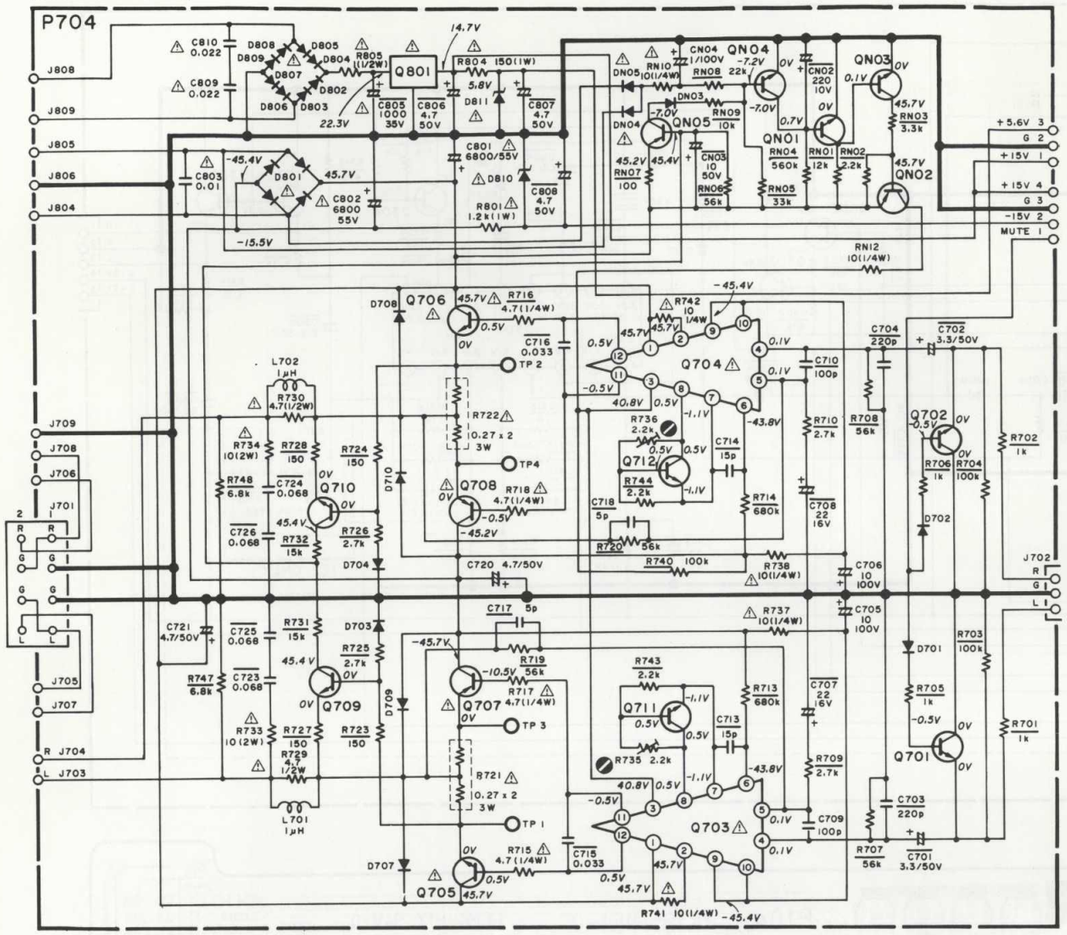

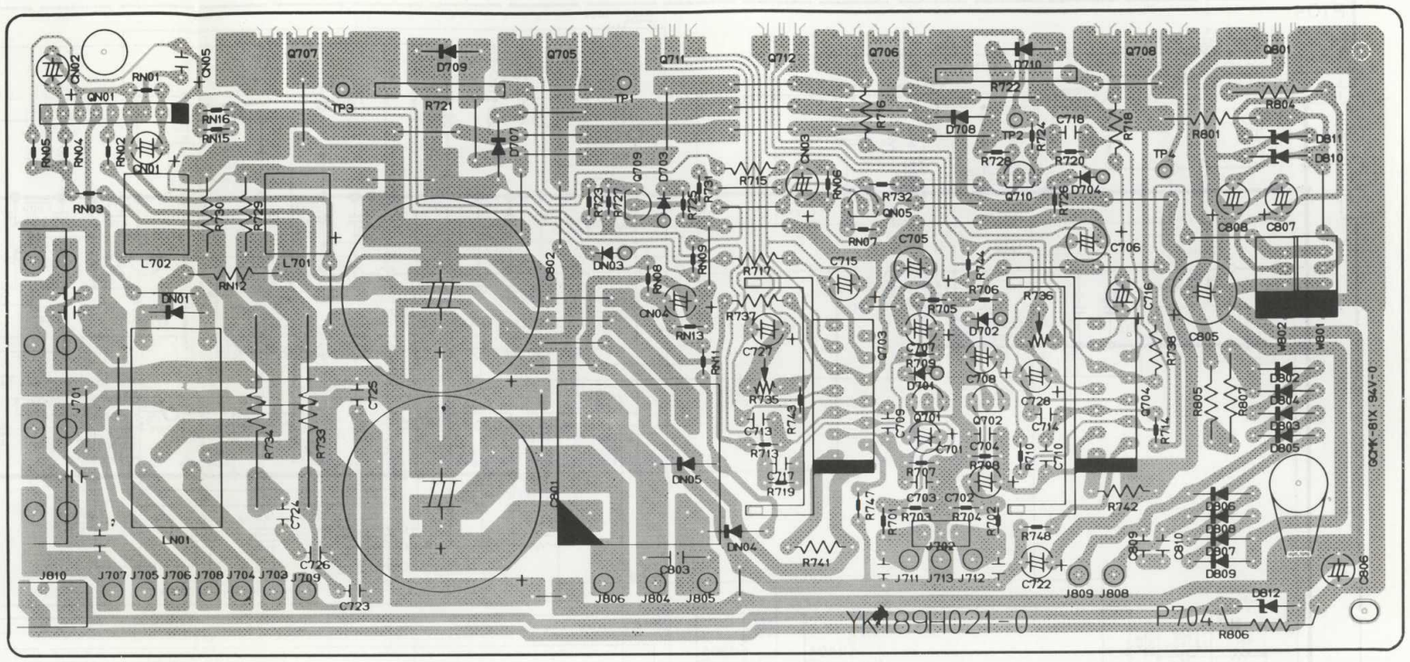

9.7 Power Switch Assembly (PP04) Schematic Diagram and Component Locations

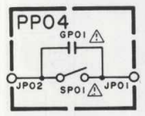

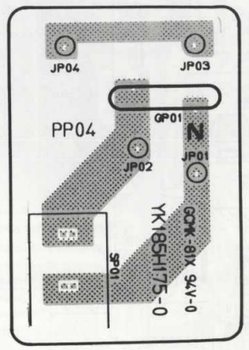

9.8 Lamp Assembly (PZ04) Schematic Diagram and Component Locations

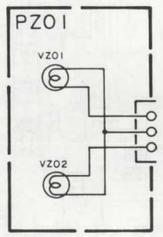

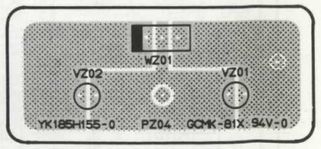

9.9 Graphic EQ Volume Assembly (PF54) Schematic Diagram and Component Locations

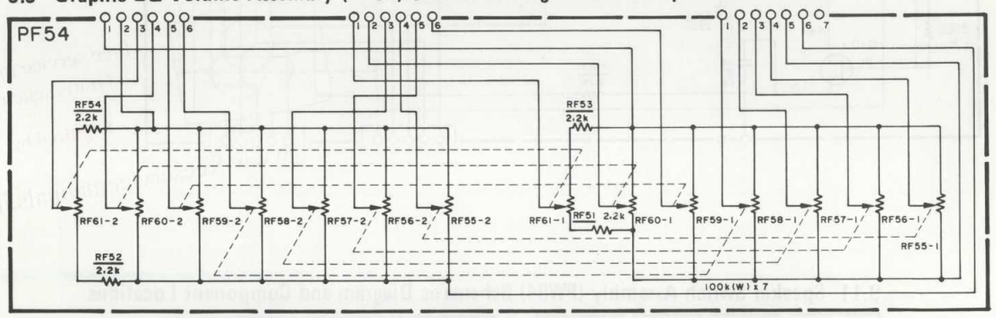

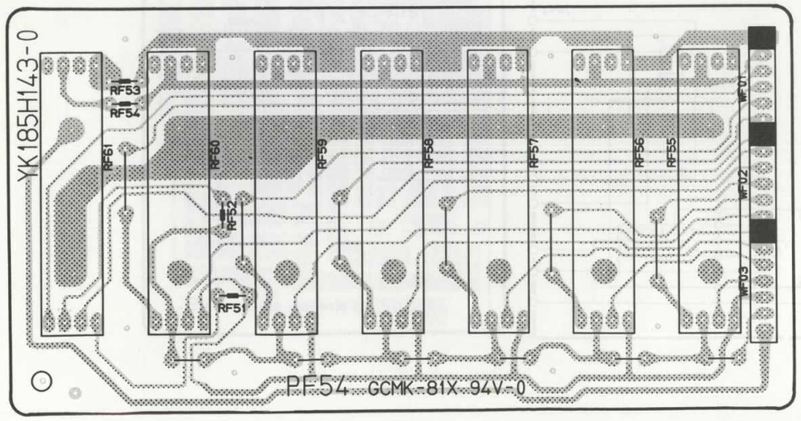

9.10 Tuner Assembly (P104) Schematic Diagram and Component Locations

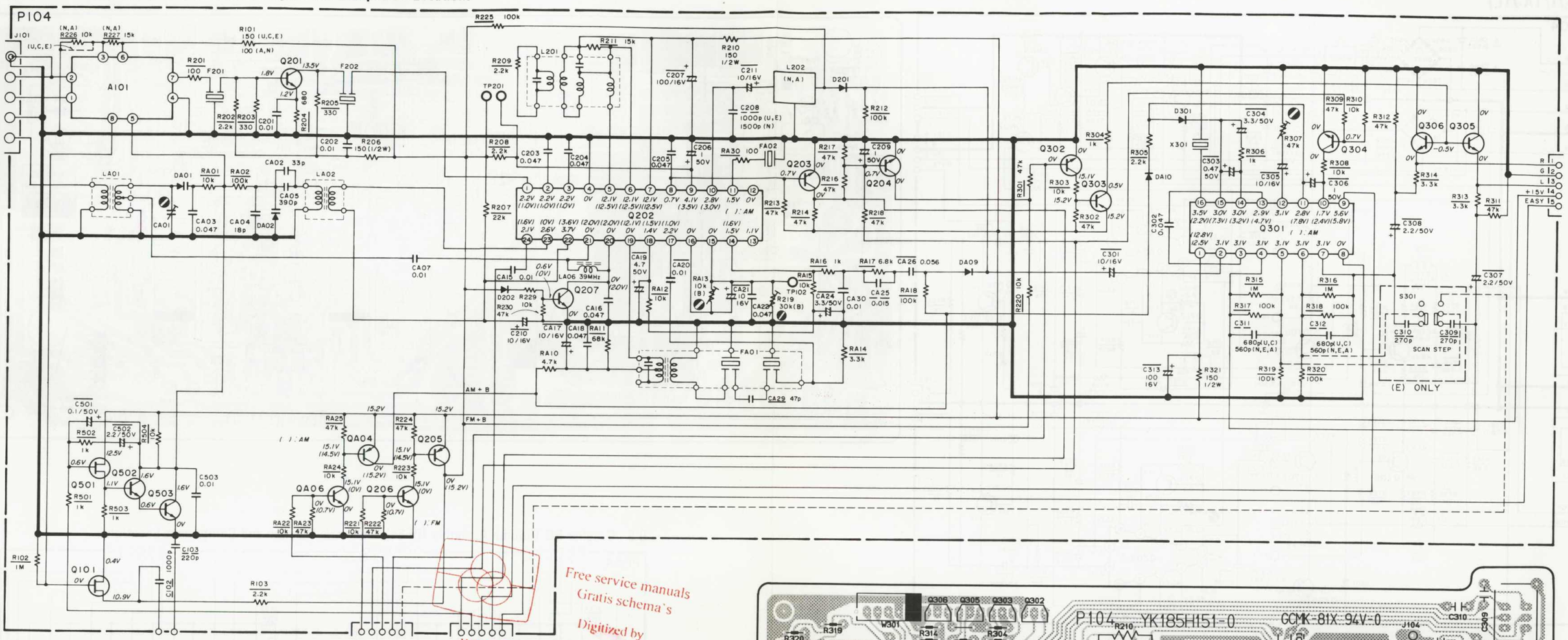

9.11 Speaker Switch Assembly (PW94) Schematic Diagram and Component Locations

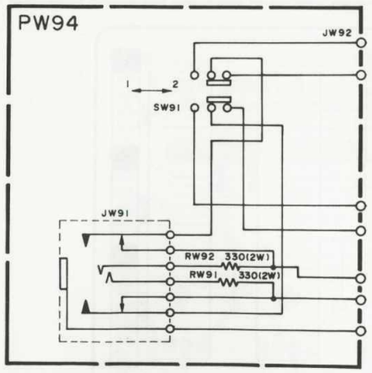

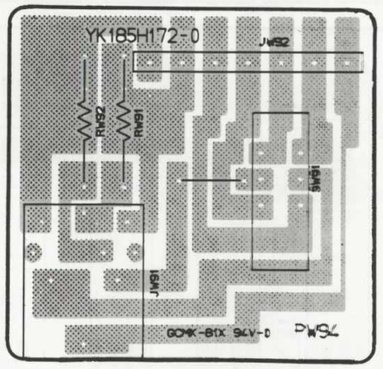

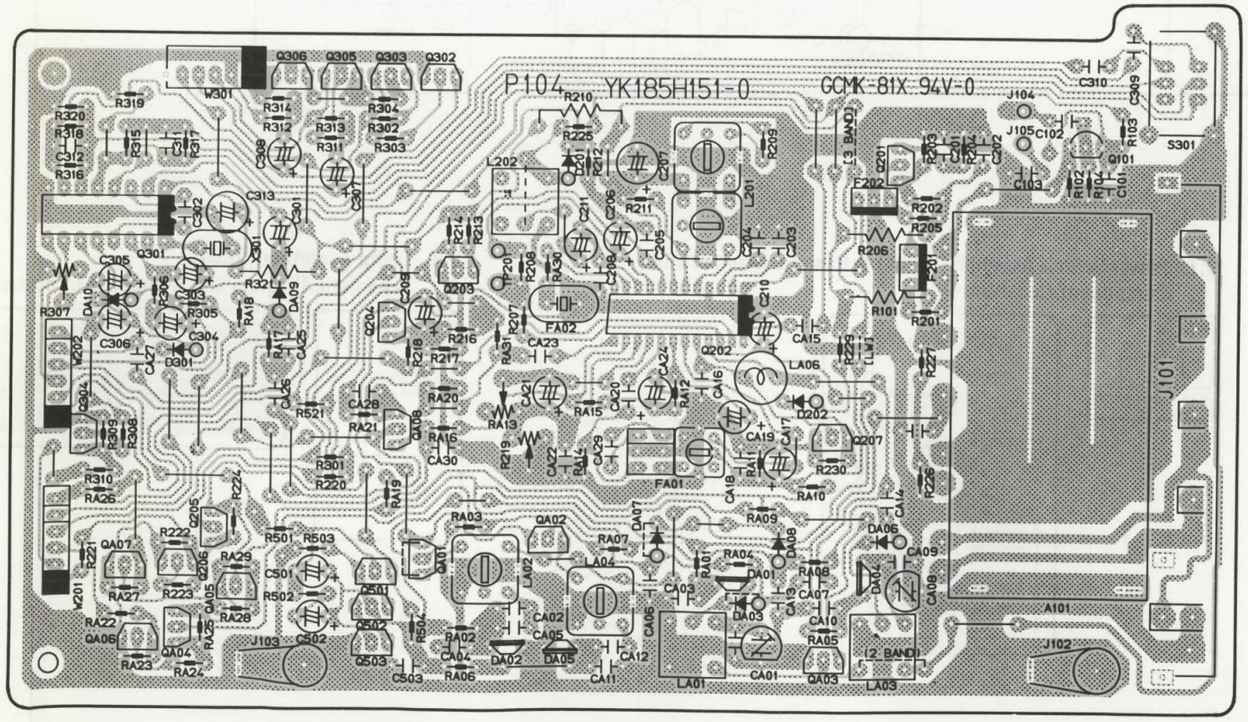

9.12 Volume Control Assembly (PG54) Schematic Diagram and Component Locations

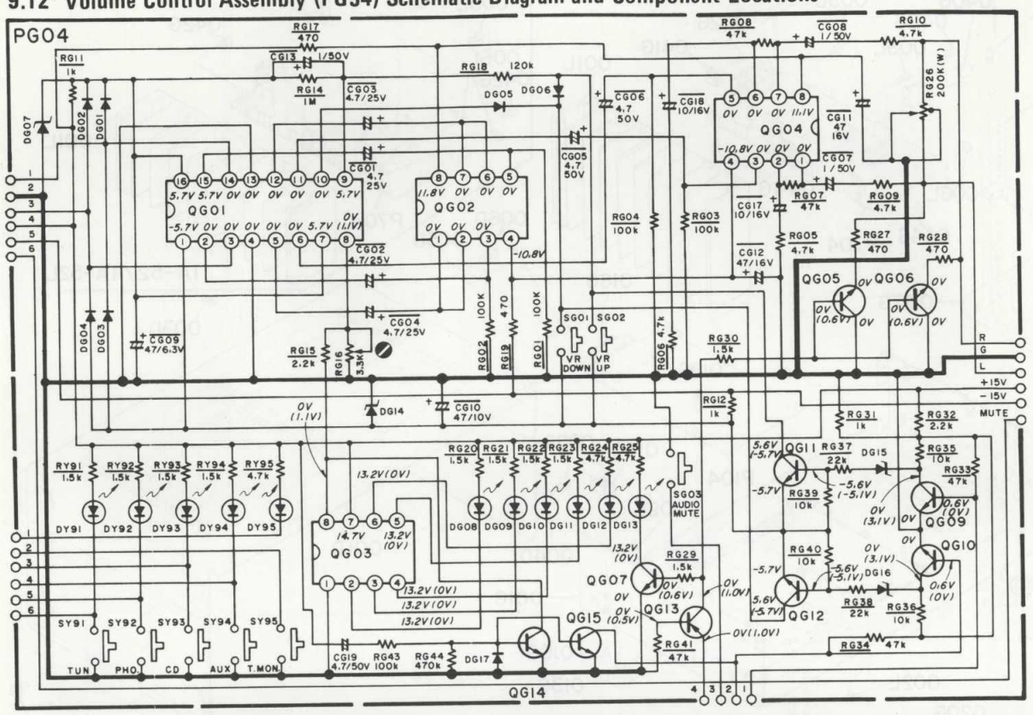

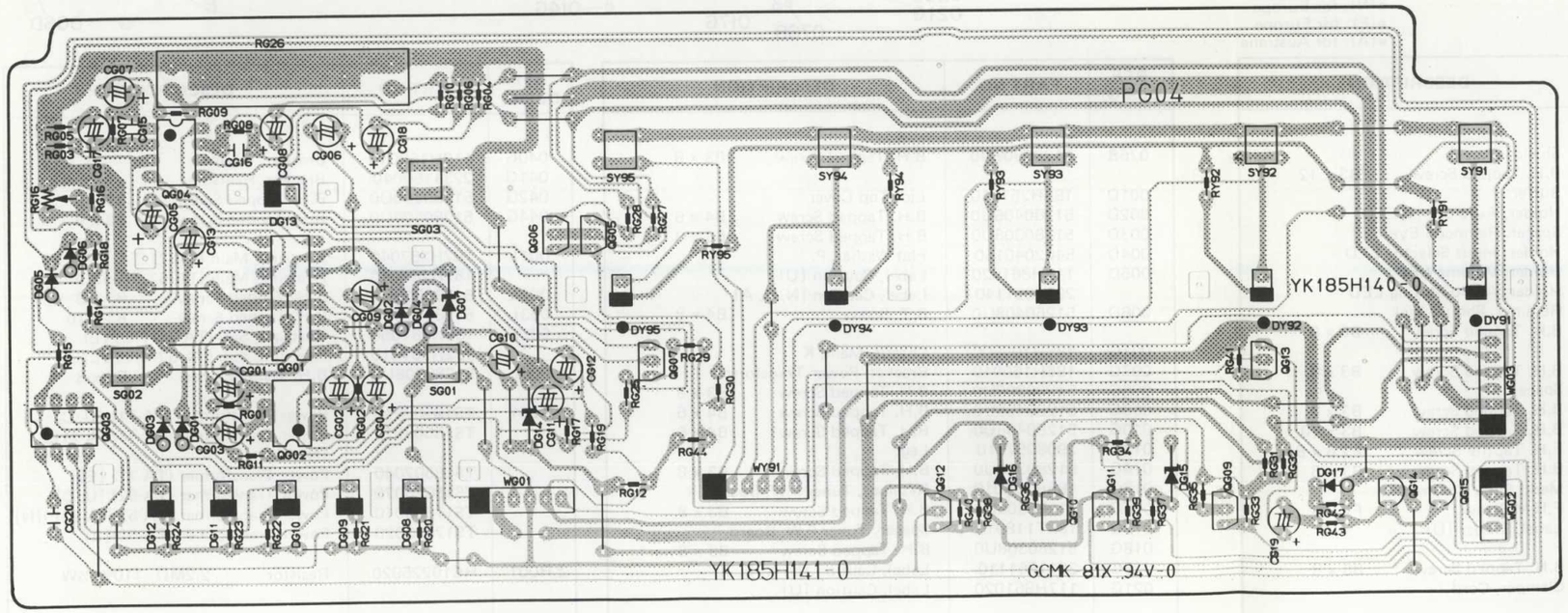

9.13 Function Assembly (P404) Schematic Diagram and Component Locations

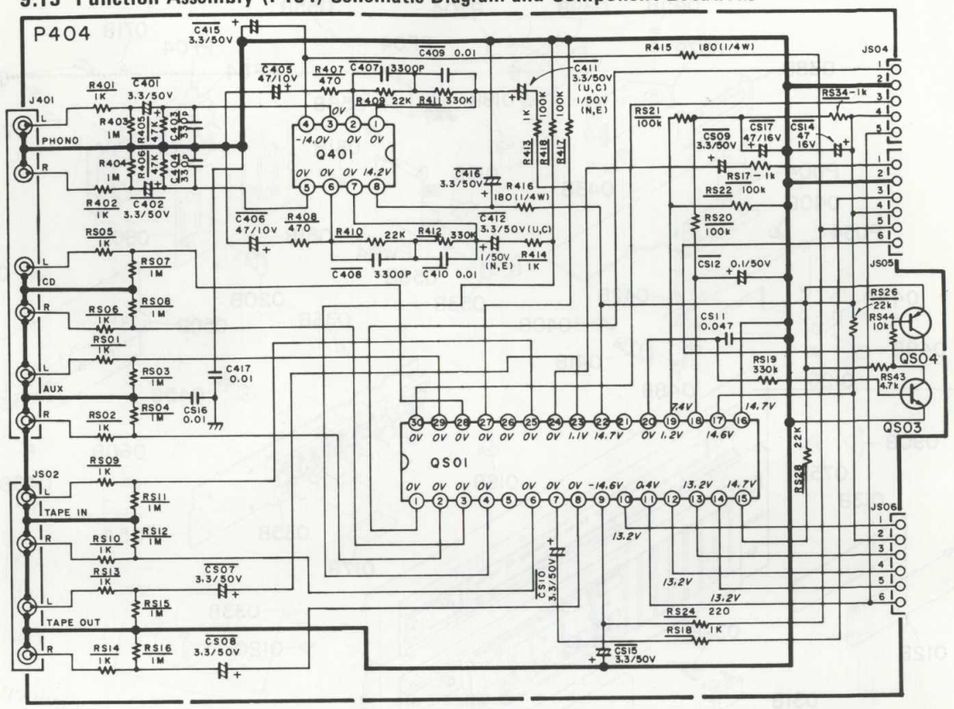

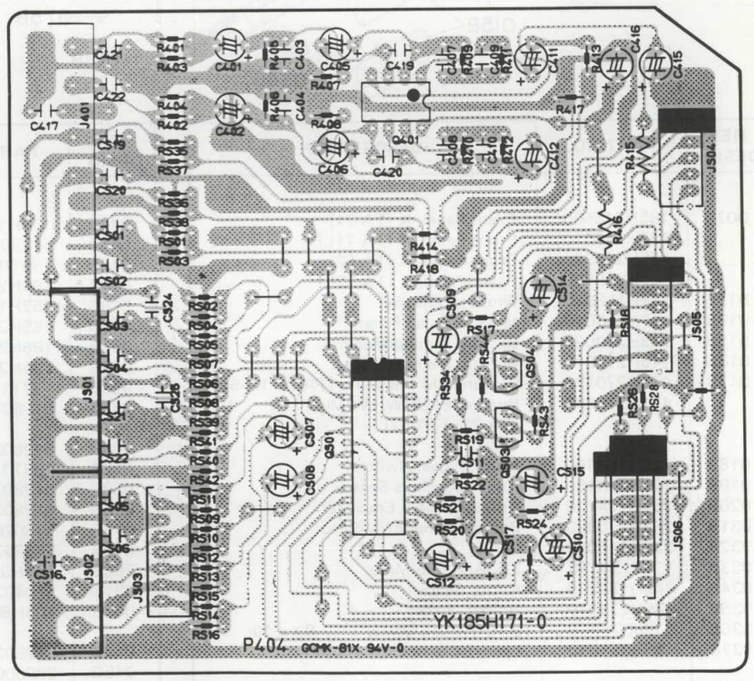

10. EXPLODED VIEW AND PARTS LIST [C01-99] FRONT PANEL

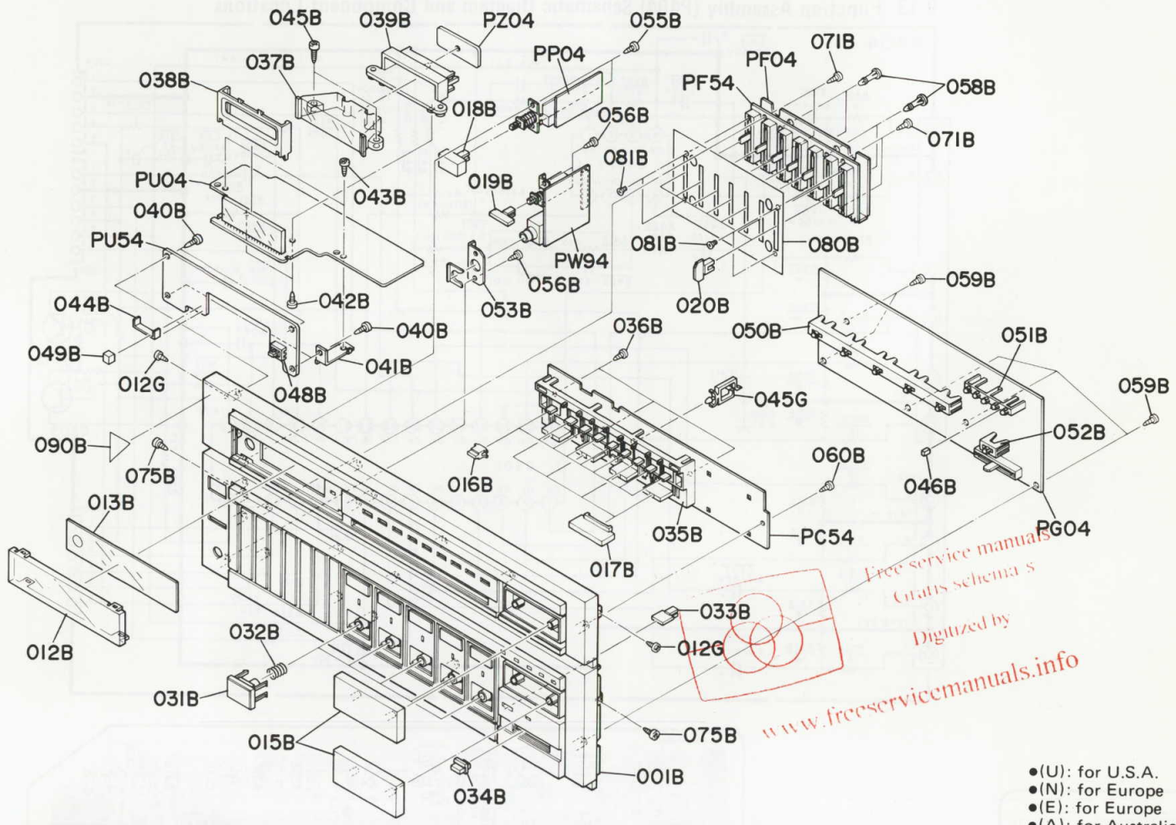

- (U): for U.S.A.
- (N): for Europe
- (E): for Europe
- (A): for Australia

REF. DESIG.	PART NO.	DESCRIPTION
001B	185H248560	Front Panel, K (TA-71)
	185H248570	Front Panel, K (TA-71L)
	185H248540	Front Panel, K (TA-52)
	185H248550	Front Panel, K (TA-52L)
012B	145H158010	Window, Display
013B	187H303010	Mask, Display Filter
015B	145H270020	Button, Tuning/Volume
016B	145H270010	Button, Memory/Preset
017B	471H270130	Button, AM/FM/Mute (TA-71/TA-52)
	471H270130	Button, FM/MW/LW/Mute (TA-71L/TA-52L)
018B	135H154350	Knob, Power Switch
019B	135H154160	Knob, Speakers Switch
020B	259H154120	Knob, Graphic Equalizer
031B	268H270380	Button, Serector/Monitor
032B	268H115020	Spring
033B	129T154130	Knob, Audio Mute
034B	143H154230	Knob, Balance
035B	145H271010	Holder, Preset
036B	51280310U0	B.H. Tapped Screw B3 x 10
037B	185H355030	Lens, LCD
038B	185H271050	Holder, LCD
039B	185H274010	Reflector, LCD
040B	51280308U0	B.H. Tapped Screw B3 x 8
041B	185H104020	Retainer, LCD
042B	51280308U0	B.H. Tapped Screw B3 x 8
043B	51280308U0	B.H. Tapped Screw B3 x 8

REF. DESIG.	PART NO.	DESCRIPTION
044B	158H109010	Shield
045B	5128031280	B.H. Tapped Screw B3 x 12
046B	136T056010	Buffer
048B	185H271040	Holder, Auto Stereo LED
049B	452H118010	Spacer, Remocon Eye
050B	185H271020	Holder, Input Selector LED
051B	185H271010	Holder, Volume LED
052B	185H271030	Holder, Audio Muting LED
053B	177T104010	Retainer, Phones Jack
055B	51280308U0	B.H. Tapped Screw B3 x 8
056B	51280308U0	B.H. Tapped Screw B3 x 8
058B	188T118010	Spacer
059B	51280308U0	B.H. Tapped Screw B3 x 8
060B	51280310U0	B.H. Tapped Screw B3 x 10
071B	51502608U0	F.H. Taptite Screw F2.6 x 8
075B	51280308U0	B.H. Tapped Screw B3 x 8
080B	145H303020	Mask, Slide Volume
081B	51040203S0	F.H.M Screw F2 x 3
090B	105H861010	Label, 3 Year [U]
012G	51280308U0	B.H. Tapped Screw B3 x 8
045G	2886005020	Clamper, Cord

[C02-99] LID AND CHASSIS

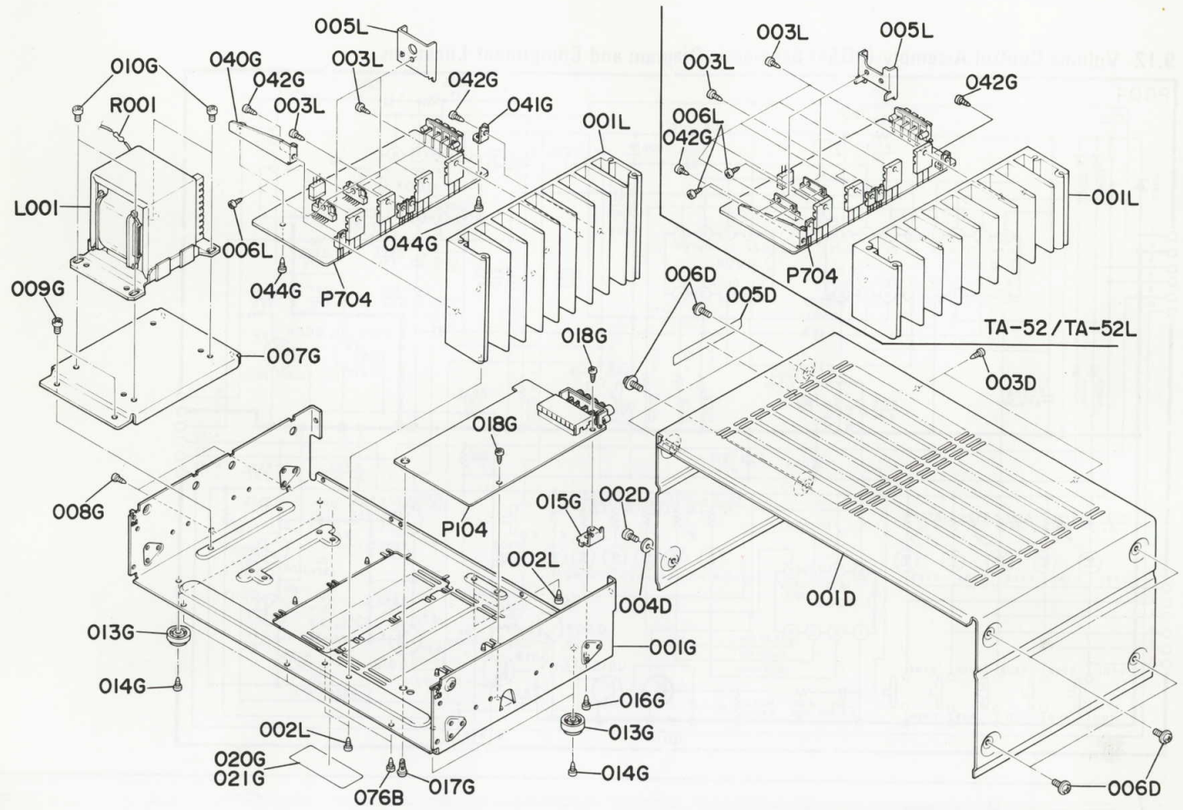

REF. DESIG.	PART NO.	DESCRIPTION
076B	51280308U0	B.H. Tapped Screw B3 x 8
001D	185H257010	Lid, Top Cover
002D	51280406U0	B.H. Tapped Screw B4 x 6
003D	51280308U0	B.H. Tapped Screw B3 x 8
004D	54020401S0	Flat Washer, P.
005D	117H861020	Label, Caution [U]
	2911861140	Label, Caution [N, E, A]
006D	51260408U0	B.T. Screw B4 x 8
001G	185H105500	Chassis, Main; K
007G	185H160010	Bracket, Power Transformer
008G	51280308U0	B.H. Tapped Screw B3 x 8
009G	51280406U0	B.H. Tapped Screw B4 x 6
010G	51280406U0	B.H. Tapped Screw B4 x 6
013G	2908057010	Leg
014G	51280308U0	B.H. Tapped Screw B3 x 8
015G	185H104010	Retainer, Tuner P.W. Board
016G	51280308U0	B.H. Tapped Screw B3 x 8
017G	188T118010	Spacer, Tuner P.W. Board
018G	51280308U0	B.H. Tapped Screw B3 x 8
020G	2911861110	Label, Caution [U, N, E, A]
021G	117H861020	Label, Caution [U]

REF. DESIG.	PART NO.	DESCRIPTION
040G	112H160010	Bracket, Heatsink
041G	2231160040	Bracket, Heatsink
042G	51280308U0	B.H. Tapped Screw B3 x 8
044G	51280308U0	B.H. Tapped Screw B3 x 8
001L	187H267040	Heatsink, Main (TA-71/TA-71L)
	187H267010	Heatsink, Main (TA-52/TA-52L)
002L	51280308U0	B.H. Tapped Screw B3 x 8
003L	51280310U0	B.H. Tapped Screw B3 x 10
005L	189H267050	Heatsink, Sub (TA-71/TA-71L)
	262H267010	Heatsink, Sub (TA-52/TA-52L)
006L	51280308U0	B.H. Tapped Screw B3 x 8
⚠L001	TS18507010	Power Transformer (TA-71) [U, C]
	TS18507020	Power Transformer (TA-71/TA-71L) [N, A]
	TS18507040	Power Transformer (TA-71) [E]
	TS18620070	Power Transformer (TA-52) [U, C]
	TS17633010	Power Transformer (TA-52/TA-52L)[N]
	TS17633020	Power Transformer (TA-52)[E]
⚠R001	RC10225920	Resistor 2.2MΩ ±10% ½W

[C03-99] REAR PANEL

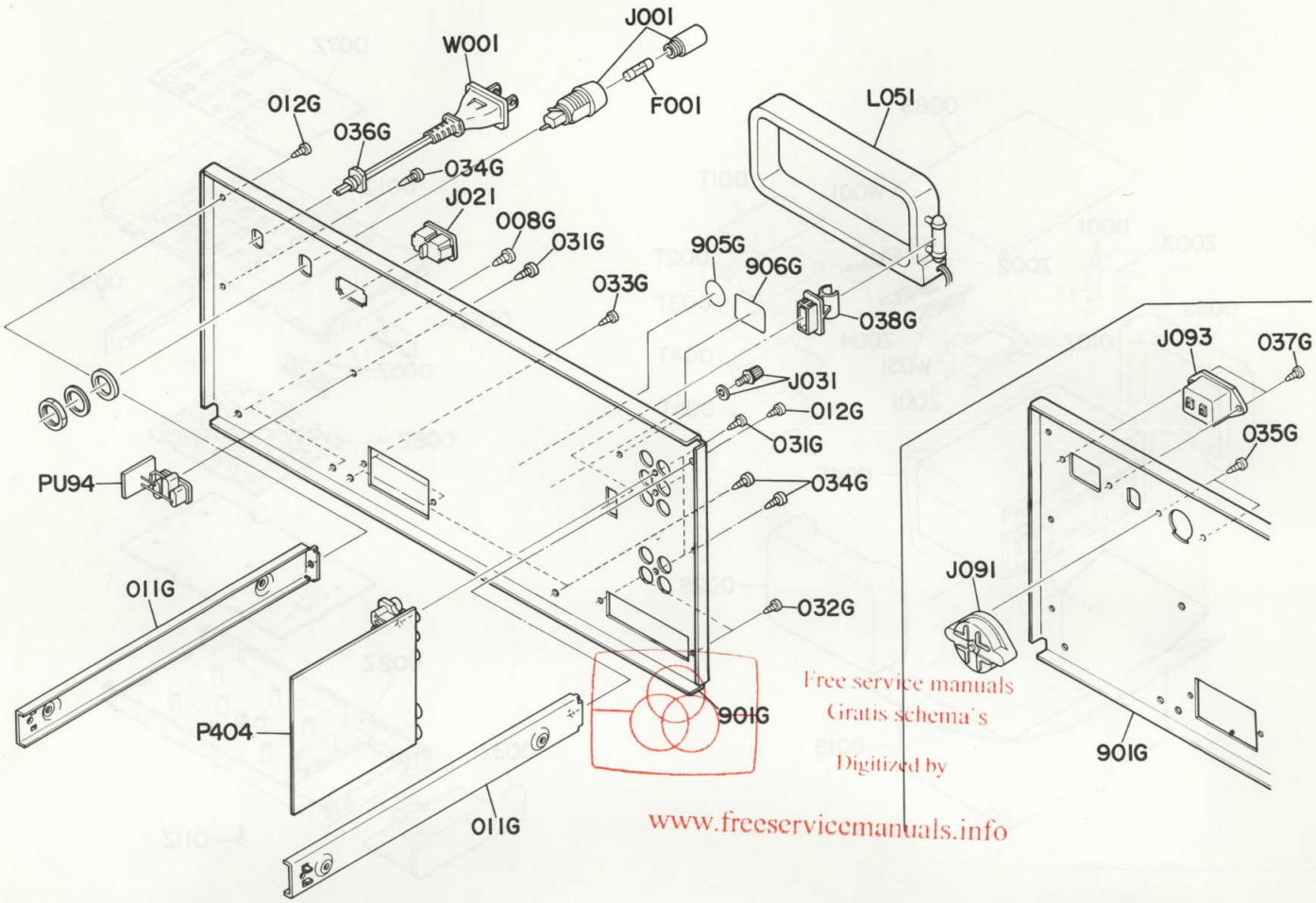

REF. DESIG.	PART NO.	DESCRIPTION
008G	51280308U0	B.H. Tapped Screw B3 x 8
011G	185H126010	Stay
012G	51280308U0	B.H. Tapped Screw B3 x 8
031G	51280308U0	B.H. Tapped Screw B3 x 8
032G	51280308U0	B.H. Tapped Screw B3 x 8
033G	51280308U0	B.H. Tapped Screw B3 x 8
034G	51280308U0	B.H. Tapped Screw B3 x 8
035G	51280308U0	B.H. Tapped Screw B3 x 8 [N, E, A]
036G	1455259090	Bushing, AC Power Cord [U]
	1455259130	Bushing, AC Power Cord [E]
037G	51280308U0	B.H. Tapped Screw B3 x 8 [N, E, A]
038G	417H271020	Holder, Loop Antenna
901G	189H250020	Rear Panel (TA-71) [U, C]
	189H250010	Rear Panel (TA-71) [N, A]
	189H250030	Rear Panel (TA-71) [E]
	190H250010	Rear Panel (TA-71L)
	187H250030	Rear Panel (TA-52) [U, C]
	187H250010	Rear Panel (TA-52) [N]
	187H250020	Rear Panel (TA-52) [E]
	188H250010	Rear Panel (TA-52L)
905G	9511101070	Label, UL [U]
906G	2457861040	Label, CSA [U]

REF. DESIG.	PART NO.	DESCRIPTION
⚠F001	FS10400500	Fuse 4.0A 250V (TA-71) [U, C]
	FS10200800	Fuse T2.0A 250V (TA-71/TA-71L) [N, E, A]
	FS10350500	Fuse 3.5A 250V (TA-52) [U, C]
	FS10160800	Fuse T1.6A 250V (TA-52/TA-52L) [N, E]
⚠J001	YJ08000300	Jack, Fuse Holder [U, C]
	YJ08000290	Jack, Fuse Holder [N, E, A]
⚠J021	YJ04001210	Jack, AC Outlet [U, C, E]
J031	YL03010250	Terminal, GND
⚠J091	BY05030040	Voltage Selector [N, A]
	BY05080050	Voltage Selector [E]
⚠J093	YP04000610	Plug, AC Inlet [N, A]
⚠W001	YC02000380	A.C. Power Cord [U, C]
	YC01900080	A.C. Power Cord [E]
L051	LA00015020	Antenna, Loop

[H01-99] PACKING MATERIALS

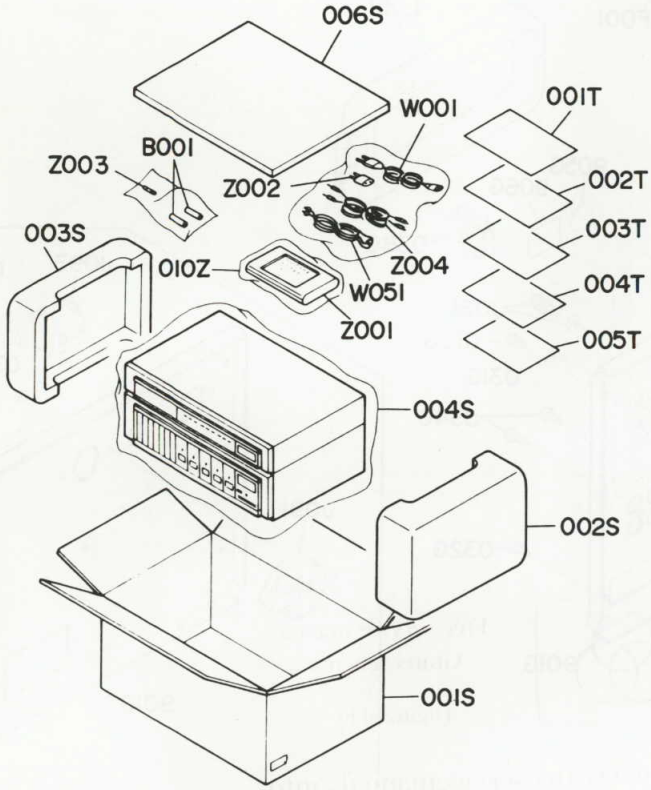

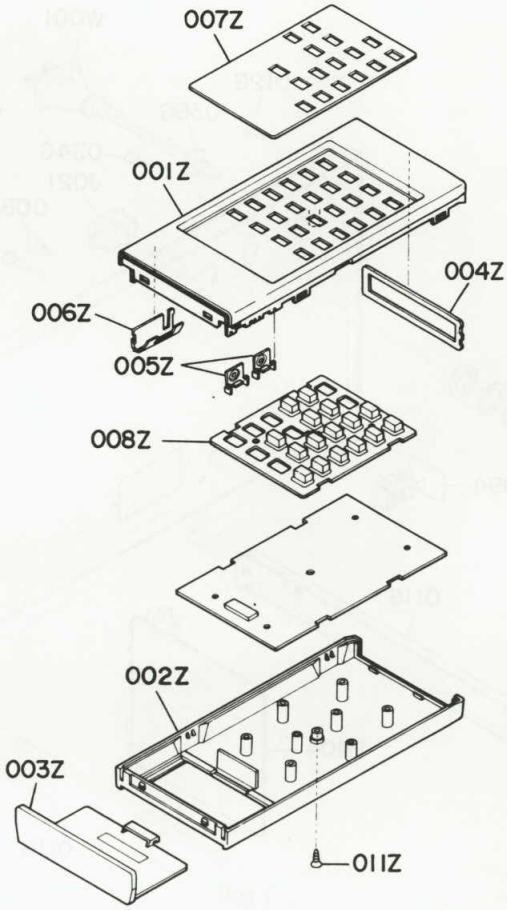

REF. DESIG.	PART NO.	DESCRIPTION
		PACKING
001S	189H801030	Packing Case (TA-71) [U, C]
	189H801010	Packing Case (TA-71) [N, A]
	189H801020	Packing Case (TA-71) [E]
	190H801010	Packing Case (TA-71L)
	187H801030	Packing Case (TA-52) [U, C]
	187H801010	Packing Case (TA-52) [N]
	187H801020	Packing Case (TA-52) [E]
	188H801010	Packing Case (TA-52L)
002S	145H809010	Cushion, (L)
003S	145H809020	Cushion, (R)
004S	9091111030	Polyethylene Sheet
006S	145H807010	Reinforcing [E]
001T	189H851210	User Manual [U]
	185H851310	User Manual [N, E, A]
002T	189H851220	User Manual, Spec (TA-71) [U]
	189H851320	User Manual, Spec (TA-71/TA-71L) [N, E, A]
	187H851220	User Manual, Spec (TA-52) [U]
	187H851320	User Manual, Spec (TA-52/TA52L) [N, E]
003T	189H856010	Circuit Diagram (TA-71) [N, E]
	190H856010	Circuit Diagram (TA-71L)
	187H856010	Circuit Diagram (TA-52) [N, E]
	188H856010	Circuit Diagram (TA-52L)
004T	103H854010	Warranty Card [U]
	9631000090	Warranty Card [A]
005T	180T854010	Warranty Card [U]

REF. DESIG.	PART NO.	DESCRIPTION
B001	ZB02032020	Battery, SUM-3
⚠W001	ZC01805030	A.C. Power Cord [N]
	ZC02006030	A.C. Power Cord [A]
W051	ZA02000070	EXT Antenna, FM
Z001	ZK146H0010	Unit K, Remocon (RMC101)
Z002	YJ04001240	Jack, AC Adapter [E]
Z003	FS10400800	Fuse T4.0A 250V [E]
Z004	ZD00400100	Connective Cord
		REMOCON
001Z	149H064010	Case, Front Cover
002Z	149H064020	Case, Back Cover
003Z	149H064030	Case, Battery Cover
004Z	149H158050	Window, Front
005Z	149H123010	Contactor
006Z	149H123020	Contactor, (+, –)
007Z	149H265110	Indicator
008Z	149H270180	Button
010Z	9011020010	Polyethylene Bag
011Z	51502608U0	F.H. Taptite Screw F2.6 x 8

ASSIGNMENT OF COMMON PARTS CODES.

RESISTOR

R***: (1) GD05 --- 140, Carbon film fixed resistor, ±5%, 1/4W
R***: (2) GD05 --- 160, Carbon film fixed resistor, ±5%, 1/6W

① — Resistance value

Examples

① Resistance value

0.1Ω...001	10Ω...100	1kΩ...102	100kΩ...104
0.5Ω...005	18Ω...180	2.7kΩ...272	680kΩ...684
1Ω...010	100Ω...101	10kΩ...103	1MkΩ...105
6.8Ω...068	390Ω...391	22kΩ...223	4.7MkΩ...475

(Note) Please distinguish 1/4W from 1/6W by the shape of parts used actually.

C***: CERAMIC CAP.

(1) DD1 --- 370, Ceramic condenser
Disc type
Temp. coeff. P350 ~ N1000, 50V

①② — Capacity value, Tolerance

Examples

① Tolerance (Capacity deviation)
±0.25pF...0
±0.5pF...1
±5%...5

* Tolerance of COMMON PARTS handled here are as follows:
0.5pF ~ 5pF...±0.25pF
6pF ~ 10pF...±0.5pF
12pF ~ 560pF...±5%

② Capacity value

0.5pF...005	3pF...030	100pF...101
1pF...010	10pF...100	220pF...221
1.5pF...015	47pF...470	560pF...561

C***: CERAMIC CAP.

(1) DK16 --- 300, High dielectric constant ceramic condenser
Disc type
Temp. chara. 2B4, 50V

① — Capacity value

Example

② Capacity value

100pF...101	1000pF...102	10000pF...103
470pF...471	2200pF...222	

C***: ELECTROLY CAP. (≠), FILM CAP. (≠)

(1) EA ------ 10, Electrolytic condenser
One-way lead type, Tolerance ±20%

①② — Dielectric strength, Capacity value

Examples

① Capacity value

0.1μF...104	4.7μF...475	100μF...107
0.33μF...334	10μF...106	330μF...337
1μF...105	22μF...226	1100μF...108
		2200μF...228

② Working voltage

6.3V...006	25V...025
10V...010	35V...035
16V...016	50V...050

(2) DF15 --- 350, Plastic film condenser
One-way type, Mylar ±5% 50V

① — Capacity value

Examples

① Capacity value

0.001μF (1000pF)...102	0.1μF...104
0.0018μF.....182	0.56μF...564
0.01μF.....103	1μF...105
0.015μF.....153	

11. ELECTRICAL PARTS LIST

•(U): for U.S.A.
•(N): for Europe
•(E): for Europe
•(A): for Australia

REF. DESIG.	PART NO.	DESCRIPTION	
		PC54-TUNER TACT SWITCH CIRCUIT BOARD	
PC54	YK185H1420	P.W. Board, Tuner Tact Switch	
	ZZ185H1420	P.W. Board Assembly (TA-71/TA-52)	
	ZZ190H8420	P.W. Board Assembly (TA-71L/TA52L)	
SC51 ~ SC60	SP01010970	Push Switch, Tact	
SC61 ~ SC65	SP01010970	Push Switch, Tact (TA-71L/TA-52L)	
WC51	YU08140260	Jumper Lead, 8P	
		PF04-GRAPHIC EQ CIRCUIT BOARD	
PF04	YK185H1440	P.W. Board, Graphic EQ	
	ZZ185H1440	P.W. Board Assembly	
		PF04-SEMICONDUCTORS	
QF01	HC10052210	IC	BA3812L
QF02	HC10052210	IC	BA3812L
QF03	HC10052210	IC	BA3812L
		PF04-MISCELLANEOUS	
JF01	YJ06002450	Jack, 6P	
JF03	YJ06001040	Jack, 3P	
WF01	YU06060260	Jumper Lead, 6P	
WF02	YU06060260	Jumper Lead, 6P	
WF03	YU07060260	Jumper Lead, 7P	
WF04	YU04120260	Jumper Lead, 4P	
		PF05-GRAPHIC EQ VOLUME CIRCUIT BOARD	
PF54	YK185H1430	P.W. Board, Graphic EQ Volume	
	ZZ185H1430	P.W. Board Assembly	
RF55 ~ RF61	RS01040460	Variable Resistor	100KΩ(W)
		PG04-VOLUME CONTROL CIRCUIT BOARD	
PG04	YK185H1410	P.W. Board, Volume Control	
	ZZ185H1410	P.W. Board Assembly	
		PG04-RESISTORS	
RG16	RA04720750	4.7KΩ(B), Trimming	
RG26	RX02040080	200KΩ, Variable	
		PG04-SEMICONDUCTORS	
DG01 ~ DG06	HD20002000	Diode	1SS133 etc.
DG07 ~ DG08	HD30006020	Zener	MA1062
DG11	HI10056320	L.E.D.	GL-5EG21

REF. DESIG.	PART NO.	DESCRIPTION	
DG12	HI10055320	L.E.D.	GL-5HD21
DG13	HI10055320	L.E.D.	GL-5HD21
DG14	HD30006020	Zener	MA1062
DG15	HD30006020	Zener	MA1062
DG16	HD30006020	Zener	MA1062
DG17	HD20002000	Diode	1SS133 etc.
DY91 ~ DY94	HI1005630	L.E.D.	GL-5EG21
DY95	HI10055320	L.E.D.	GL-5HD21
QG01	HC10085050	IC	TC9153P
QG02	HC10008090	IC	NJM4558DD
QG03	HC10008370	IC	TL489CP
QG04	HC10008090	IC	NJM4558DD
QG05	HT328781A0	Transistor	2SC2878A
QG06	HT328781A0	Transistor	2SC2878A
QG07	HT30001000	Transistor	2SC536SP etc.
QG09 ~ QG12	HT30001000	Transistor	2SC536SP etc.
QG13	HT10001000	Transistor	2SA608 etc.
QG14	HT413022B0	Transistor	2SD1302(S, T)
QG15	HT413022B0	Transistor	
		PG04-MISCELLANEOUS	
SG01	SP01010970	Push Switch, VR Down	
SG02	SP01010970	Push Switch, VR Up	
SG03	SP01010970	Push Switch, Mute	
SY91 ~ SY95	SP01010970	Push Switch, Tact	
WG01	YU06220260	Jumper Lead, 6P	
WG02	YU04160260	Jumper Lead, 4P	
WG03	YU06100260	Jumper Lead, 6P	
WY91	YU06240260	Jumper Lead, 6P	
		PP04-POWER SWITCH CIRCUIT BOARD	
PP04	YK185H1750	P.W. Board, Power Switch	
	ZZ185H1750	P.W. Board Assembly	
⚠GP01	DK18103840	Ceramic Cap. 0.01μF	400V
⚠SP01	SP01011090	Push Switch, Power	
		PU04-LCD CONTROL CIRCUIT BOARD	
PU04	YK185H1520	P.W. Board, LCD Control	
	ZZ185H1520	P.W. Board Assembly [U, C, N, A]	
	ZZ185H7520	P.W. Board Assembly [E]	
		PU04-CAPACITORS	
CU04	EX47300520	Elect 0.047μF	5.5V
CU06	DK18103310	Ceramic 0.01μF	+80% −20%
		PU04-RESISTORS	
RU20	GA05220010	22Ω ±5%	1W
RU21	NH05330120	33Ω ±5%	½W, Fusible
RU22	NH05330120	33Ω ±5%	½W, Fusible

REF. DESIG.	PART NO.	DESCRIPTION	
		PU04-SEMICONDUCTORS	
DU01 ~ DU04	HD20002000	Diode	1SS133 etc.
QU01	HC10193030	IC	LM6416E
QU02	HC10071020	IC	MN1527KMA
QU03	HT30001000	Transistor	2SC536SP etc.
QU04	HT30001000	Transistor	2SC536SP etc. [E]
QU05	HT30001000	Transistor	2SC536SP etc.
		PU04-MISCELLANEOUS	
JU01	YJ06002440	Jack, 4P [U, N]	
	YJ06002390	Jack, 5P [E]	
JU02	YJ06002390	Jack, 5P	
JU03	YJ06002440	Jack, 4P	
JU04	YJ06002270	Jack, 8P	
JU05	YJ06002430	Jack, 3P	
VU03	HQ21001560	Display Unit, LCA7B8021A	
XU01	FQ04003010	Seramic Vibrator, CSB400P	
XU02	XB108001L0	Cristal	4.5MHz
		PU54-REMOTE BUFFER CIRCUIT BOARD	
PU54	YK185H1530	P.W. Board, Remote Buffer	
	ZZ185H1530	P.W. Board Assembly	
CU56	DK18103310	Ceramic Cap. 0.01μF	+80% −20%
DU51	HI60001020	L.E.D.	PN323B
DU52	HI10050030	L.E.D.	SLP151B-60
DU53	HD20002000	Diode	1SS133 etc.
QU51	HC10142060	IC	μPC1473HA
QU52	HT10001000	Transistor	2SA608SP etc.
LU51	LA74020010	Antenna Coil, 37.5KHz	
WU51	YU04260260	Jumper Lead, 4P	
		PU94-REMOTE PAUSE CIRCUIT BOARD	
PU94	YK185H1540	P.W. Board, Remote Pause	
	ZZ185H1540	P.W. Board Assembly	
JU91	YT02020510	Terminal, 2P; RCA Pin	
		PW94-SPEAKER SWITCH CIRCUIT BOARD	
PW94	YK185H1720	P.W. Board, Speaker Switch	
	ZZ185H1720	P.W. Board Assembly	
RW91	GA05331020	Resistor 330Ω ±5%	2W
RW92	GA05331020	Resistor 330Ω ±5%	2W
JW91	YJ01002090	Jack, Headphone	
JW92	YP06000590	Plug, 7P	
SW91	SP02011330	Push Switch, Speaker	

REF. DESIG.	PART NO.	DESCRIPTION
		PZ04-LAMP CIRCUIT BOARD
PZ04	YK185H1550	P.W. Board, Lamp
	ZZ185H1550	P.W. Board Assembly
VZ01	IN10120170	Lamp 12V
VZ02	IN10120170	Lamp 12V
WZ01	YU03100260	Jumper Lead, 3P
		P104-TUNER CIRCUIT BOARD
P104	YK185H1510	P.W. Board, Tuner
	ZZ185H1510	P.W. Board Assembly [U, C]
	ZZ185H8510	P.W. Board Assembly [N, A]
	ZZ185H7510	P.W. Board Assembly [E]
	ZZ190H8510	P.W. Board Assembly (TA-71L/TA-52L)
		P104-CAPACITORS
CA01	CT12000090	Trimming 20pF
CA02	DD15330300	Ceramic 33pF ±5%
CA03	DK18473310	Ceramic 0.047μF +80% −20%
CA04	DD15180300	Ceramic 18pF ±5%
CA05	DF15391550	Film 390pF ±5%
CA06	DK18103310	Ceramic 0.01μF +80% −20% (TA-70L/TA-50L)
CA07	DK18103310	Ceramic 0.01μF +80% −20% (TA-70L/TA-50L)
CA08	CT12000090	Trimming 20pF (TA-70L/TA50L)
CA09	DD15270300	Ceramic 27pF ±5% (TA-70L/TA-50L)
CA10	DK18473310	Ceramic 0.047μF +80% −20% (TA-70L/TA-50L)
CA11	DD15680300	Ceramic 68pF ±5% (TA-70L/TA-50L)
CA12	DD15151300	Ceramic 150pF ±5% (TA-70L/TA-50L)
CA13	DK18103310	Ceramic 0.01μF +80% −20% (TA-70L/TA-50L)
CA14	DK18103310	Ceramic 0.01μF +80% −20% (TA-70L/TA-50L)
CA15	DK18103310	Ceramic 0.01μF +80% −20%
CA16	DK18473310	Ceramic 0.047μF +80% −20%
CA18	DK18473310	Ceramic 0.047μF +80% −20%
CA20	DK18103310	Ceramic 0.01μF +80% −20%
CA22	DK18473310	Ceramic 0.047μF +80% −20%
CA28	DK18103310	Ceramic 0.01μF +80% −20% (TA-71L/TA-52L)
CA30	DK18103310	Ceramic 0.01μF +80% −20%
C101	DK18223310	Ceramic 0.022μF +80% −20%
C201	DK18103310	Ceramic 0.01μF +80% −20%
C202	DK18103310	Ceramic 0.01μF +80% −20%
C203	DK18473310	Ceramic 0.047μF +80% −20%
C204	DK18473310	Ceramic 0.047μF +80% −20%
C205	DK18473310	Ceramic 0.047μF +80% −20%
C302	DK18473310	Ceramic 0.047μF +80% −20%
C503	DK18103310	Ceramic 0.01μF +80% −20%
		P104-RESISTORS
RA10	GG05151120	150Ω ±5% ½W
RA13	RA01030750	10KΩ, Trimming
R101	GG05151120	150Ω ±5% ½W
R206	GG05151120	150Ω ±5% ½W
R211	GG05151120	150Ω ±5% ½W
R219	RA01030750	10KΩ, Trimming
R307	RA04730750	47KΩ, Trimming
R321	GG05151120	150Ω ±5% ½W

REF. DESIG.	PART NO.	DESCRIPTION
		P104-SEMICONDUCTORS
DA01	HD40006030	Varicap SVC321SP
DA02	HD40006030	Varicap SVC321SP
DA03	HD20002000	Diode 1SS133 etc. (TA-71L/TA-52L)
DA04	HD40006030	Varicap SVC321SP (TA-71L/TA-52L)
DA05	HD40006030	Varicap SVC321SP (TA-71L/TA-52L)
DA06	HD20002000	Diode 1SS133 etc. (TA-71L/TA-52L)
DA07	HD20002000	Diode 1SS133 etc. (TA-71L/TA-52L)
DA08	HD20002000	Diode 1SS133 etc. (TA-71L/TA-52L)
DA09	HD20002000	Diode 1SS133 etc.
DA10	HD20002000	Diode 1SS133 etc.
D201	HD20002000	Diode 1SS133 etc.
D202	HD20002000	Diode 1SS133 etc.
D301	HD20002000	Diode 1SS133 etc.
QA01	HF20030080	F.E.T. 2SK30A(Y) (TA-71L/TA-52L)
QA02	HF20030080	F.E.T. 2SK30A(Y) (TA-71L/TA-52L)
QA03	HT413022B0	Transistor 2SD1302(S, T) (TA-71L/TA-52L)
QA04	HT10001000	Transistor 2SA608SP etc. (TA71L/TA-52L)
QA05	HT10001000	Transistor 2SA608SP etc. (TA-71L/TA-52L)
QA06	HT30001000	Transistor 2SC536SP etc.
QA07	HT30001000	Transistor 2SC536SP etc. (TA-71L/TA-52L)
QA08	HT30001000	Transistor 2SC536SP etc. (TA-71L/TA-52L)
Q101	HF200551D0	F.E.T. 2SK55D
Q201	HT308291C0	Transistor 2SC829(C)
Q202	HC10197030	IC LA1267
Q203	HT30001000	Transistor 2SC536SP etc.
Q204	HT30001000	Transistor 2SC536SP etc.
Q205	HT10001000	Transistor 2SA608SP etc.
Q206	HT30001000	Transistor 2SC536SP etc.
Q207	HT30001000	Transistor 2SC536SP
Q301	HC10198030	IC LA3410
Q302	HT30001000	Transistor 2SC536SP etc.
Q303	HT10001000	Transistor 2SA608SP etc.
Q304	HT30001000	Transistor 2SC536SP etc.
Q305	HT30001000	Transistor 2SC536SP etc.
Q306	HT30001000	Transistor 2SC536SP etc.
Q501	HF200300B0	F.E.T. 2SK30A(Y)
Q502	HT30001000	Transistor 2SC536SP etc.
Q503	HT30001000	Transistor 2SC536SP etc.
		P104-MISCELLANEOUS
A101	AV01202130	V.H.F. Tuner, FE306-A13 (TA-71/TA-52) [U, C, E]
	AV01202180	V.H.F. Tuner, FE407-G23 (TA-71/TA-52) [N, A]
	AV01202130	V.H.F. Tuner, FE306-A13 (TA-71L/TA-52L)
FA01	FF10045330	Ceramic Filter, SFL455C
FA02	FF10045270	Ceramic Filter, BFU450C
F201	FF11070610	Ceramic Filter, SFF10.7MA8-A [U, C]
	FF11070620	Ceramic Filter, SFE10.7MS3-A [N, E, A]
F202	FF11070620	Ceramic Filter, SFE10.7MS3-A
J101	YT01040290	Terminal, Antenna [U, C]
	YT01050040	Terminal, Antenna [N, E, A]
J102	YL01010110	Terminal, Earth Lug
	YL01010110	Terminal, Earth Lug

REF. DESIG.	PART NO.	DESCRIPTION
LA01	LA10295140	Antenna Coil, MW
LA02	LO10013400	OSC Coil, MW
LA03	LA10295160	Antenna Coil, LW (TA-71L/TA-52L)
LA04	LO10013410	OSC Coil, LW (TA-71L/TA-52L)
LA06	LC23960700	Choke Coil, 39mH
L201	LI20029050	I.F.T. Coil, FM DET
L202	LS10295030	M.P.X. Coil, Filter [N, A]
S301	SS02020730	Slide Switch [E]
W201	YU04500260	Jumper Lead, 4P [U, N]
	YU05500260	Jumper, 5P [E]
W202	YU05480260	Jumper Lead, 5P
W301	YU05180260	Jumper Lead, 5P
X301	FQ04563010	Ceramic Vibrator, CSB456F11
		P404-FUNCTION CIRCUIT BOARD
P404	YK185H1710	P.W. Board, Function
	ZZ185H1710	P.W. Board Assembly [U, C]
	ZZ185H8710	P.W. Board Assembly [N, E, A]
		P404-CAPACITORS
C417	DK18103310	Ceramic 0.01μF +80% −20%
CS16	DK18103310	Ceramic 0.01μF +80% −20%
		P404-RESISTORS
R415	GG05181140	180Ω ±5% ¼W
R416	GG05181140	180Ω ±5% ¼W
		P404-SEMICONDUCTORS
Q401	HC10008090	IC NJM4558DD
QS01	HC10168030	IC LC7818
QS03	HT30001000	Transistor 2SC536SP etc.
QS04	HT10001000	Transistor 2SA608SP etc.
		P404-MISCELLANEOUS
J401	YT02060240	Terminal, 6P; RCA Pin
JS02	YT02040610	Terminal, 4P
JS04	YJ06002390	Jack, 5P
JS05	YJ06002450	Jack, 6P
JS06	YJ06002450	Jack, 6P
		P704-POWER SUPPLY CIRCUIT BOARD
P704	YK189H0210	P.W. Board, Power Supply (TA-71/TA-71L)
	ZZ189H0210	P.W. Board Assembly [U, C]
	ZZ189H8210	P.W. Board Assembly [N, A]
	ZZ189H7210	P.W. Board Assembly [E]
P704	YK185H0210	P.W. Board, Power Supply (TA-52/TA-52L)
	ZZ185H0210	P.W. Board Assembly [U, C]
	ZZ185H8210	P.W. Board Assembly [N, E]
		P704-CAPACITORS
CN04	EA10510010	Elect 1μF 100V (TA-71/TA-71L)
	EA33510010	Elect 3.5μF 100V (TA-52/TA-52L)
C705	EA10610010	Elect 10μF 100V
C706	EA10610010	Elect 10μF 100V
C720	EA47506310	Elect 4.7μF 63V
C722	EA47506310	Elect 4.7μF 63V

REF. DESIG.	PART NO.	DESCRIPTION
⚠C801	EB82806310	Elect 8200μF 63V (TA-71/TA-71L)
	EB68805580	Elect 6800μF 55V (TA-52/TA-52L)
⚠C802	EB82806310	Elect 8200μF 63V (TA-71/TA-71L)
	EB68805580	Elect 6800μF 55V (TA-52/TA-52L)
C803	DK18103560	Ceramic 0.01μF +80% −20%
C809	DK18223310	Ceramic 0.022μF +80% −20%
C810	DK18223310	Ceramic 0.022μF +80% −20% [U, C, N, A]
		P704-RESISTORS
⚠RN10	NH05100140	10Ω ±5% ¼W, Fusible (TA-52/TA-52L)
⚠RN12	GA05182010	1.8KΩ ±5% 1W (TA-71/TA-71L)
	NH05100140	10Ω ±5% ¼W, Fusible (TA-52/TA-52L)
⚠R715 ~ ⚠R718	GG05047140	4.7Ω ±5% ¼W
⚠R721	BW10000040	0.27Ω 3W, Composite
⚠R722	BW10000040	0.27Ω 3W, Composite
⚠R729	GG05047120	4.7Ω ±5% ½W
⚠R730	GG05047120	4.7Ω ±5% ½W
⚠R733	GA05100030	10Ω ±5% 3W (TA-71/TA-71L)
	GA05100020	10Ω ±5% 2W (TA-52/TA-52L)
⚠R734	GA05100030	10Ω ±5% 3W (TA-71/TA-71L)
	GA05100020	10Ω ±5% 2W (TA-52/TA-52L)
R735	RA02220750	2.2KΩ, Trimming (TA-71/TA-71L)
	RA04720750	4.7KΩ, Trimming (TA-52/TA-52L)
R736	RA02220750	2.2KΩ, Trimming (TA-71/TA-71L)
	RA04720750	4.7KΩ, Trimming (TA-52/TA-52L)
⚠R737	NH05100140	10Ω ±5% ¼W, Fusible
⚠R738	NH05100140	10Ω ±5% ¼W, Fusible
⚠R741	NH05100140	10Ω ±5% ¼W, Fusible
⚠R742	NH05100140	10Ω ±5% ¼W, Fusible
⚠R801	GA05152010	1.5KΩ ±5% 1W (TA-71/TA-71L)
	GA05122010	1.2KΩ ±5% 1W (TA-52/TA-52L)
⚠R802	GA05182020	1.8KΩ ±5% 2W (TA-52/TA-52L)
⚠R803	GA05182020	1.8KΩ ±5% 2W (TA-52/TA-52L)
⚠R804	GA05121010	120Ω ±5% 1W
⚠R805	NH05010120	1Ω ±5% ½W, Fusible [U, C, N]
		R704-SEMICONDUCTORS
⚠DN01	HD20016210	Diode 1SR35-200A (TA-71/TA-71L)
⚠DN03	HD20002000	Diode 1SS133 etc. (TA-52/TA-52L)
⚠DN04	HD20016210	Diode 1SR35-200A
D701 ~ D704	HD20002000	Diode 1SS133 etc.
⚠D707 ~ ⚠D710	HD20016210	Diode 1SR35-200A
⚠D801	HE20009290	Diode S5VB20
⚠D802	HD20016210	Diode 1SR35-200A
⚠D803	HD20016210	Diode 1SR35-200A [U, C, N, A]
⚠D804	HD20016210	Diode 1SR35-200A
⚠D805	HD20016210	Diode 1SR35-200A [U, C, N, A]
⚠D806	HD20016210	Diode 1SR35-200A
⚠D807	HD20016210	Diode 1SR35-200A [U, C, N, A]
⚠D808	HD20016210	Diode 1SR35-200A
⚠D809	HD20016210	Diode 1SR35-200A [U, C, N, A]
D810	HD30012020	Zener MA1150M
D811	HD30005020	Zener MA1056M

REF. DESIG.	PART NO.	DESCRIPTION
QN01	HC10042050	IC TA7317P (TA-71/TA-71L)
QN02	TH10001000	Transistor 2SA608SP etc. (TA-52/TA-52L)
QN03	HT322401A0	Transistor 2SC2240(GR) (TA-52/TA-52L)
QN04	HT30001000	Transistor 2SC536SP etc. (TA-52/TA-52L)
QN05	HT109701A0	Transistor 2SA970(GR)
Q701	HT413022B0	Transistor 2SD1302(S, T)
Q702	HT413022B0	Transistor 2SD1302(S, T)
⚠Q703	HC10145060	IC μPC1298V (TA-71/TA-71L)
	HC10097060	IC μPC1270H (TA-52/TA-52L)
⚠Q704	HC10145060	IC μPC1298V (TA-71/TA-71L)
	HC10097060	IC μPC1270H (TA-52/TA-52L)
⚠Q705	HT332802A0	Transistor 2SC3280(R, O) (TA-71/TA-71L)
	HT331822A0	Transistor 2SC3182(R, O) (TA-52/TA-52L)
⚠Q706	HT332802A0	Transistor 2SC3280(R, O) (TA-71/TA-71L)
	HT331822A0	Transistor 2SC3182(R, O) (TA-52/TA-52L)
⚠Q707	HT113012A0	Transistor 2SA1301(R, O) (TA-71/TA-71L)
	HT112652A0	Transistor 2SA1265(R, O) (TA-52/TA-52L)
⚠Q708	HT113012A0	Transistor 2SA1301(R, O) (TA-71/TA-71L)
	HT112652A0	Transistor 2SA1265(R, O)
Q709	HT322401A0	Transistor 2SC2240(GR)
Q710	HT322401A0	Transistor 2SC2240(GR)
Q711	HT334191Y0	Transistor 2SC3419(Y)
Q712	HT334191Y0	Transistor 2SC3419(Y)
⚠Q801	HC38915090	IC NJM7815A
		P704-MISCELLANEOUS
J701	YT03080020	Terminal, Speaker
J702	YP06001040	Plug, 3P
J801	YJ06002440	Jack, 4P
J803	YL01010110	Terminal
⚠LN01	LY20240190	Relay (TA-71/TA-71L)
L701	LL23905120	Coil, 1μH
L702	LL23905120	Coil, 1μH
W802	YU03200260	Jumper Lead, 3P

(W01-99)	Assembly and Wiring
(T01-99)	Adjustment
(X01-00)	Correction

NOTE ON SAFETY :
Symbol ⚠ Fire or electrical shock hazard. Only original parts should be used to replace any part marked with symbol ⚠. Any other component substitution (other than original type), may increase risk of fire or electrical shock hazard.

12. TECHNICAL SPECIFICATIONS

MODEL PM-52

AUDIO SECTION

IHF Dynamic Power
- 4 OHMS . . . . . 85 W
- 8 OHMS . . . . . 65 W

POWER OUTPUT PER CHANNEL
- DIN 4 OHMS . . . . . 60 W
- RMS 4 OHMS . . . . . 50 W
- DIN 8 OHMS . . . . . 60 W
- RMS 8 OHMS . . . . . 50 W

TOTAL HARMONIC DISTORTION AT RMS 8 OHMS 0.05%
DAMPING FACTOR 8 OHMS (1 kHz) 35

PREAMPLIFIER SECTION

Frequency Response
- Phono (IEC RIAA) . . . . . ±0.5 dB
- Aux (±1 dB) . . . . . 5 Hz ~ 40 kHz

Signal-to-Noise Ratio
- Phono . . . . . 60 dB
- Aux . . . . . 80 dB

Input Sensitivity/Impedance
- Phono . . . . . 2.8 mV/47 k ohms
- Aux . . . . . 160 mV/30 k ohms

MODEL ST-52/ST-52L

FM TUNER SECTION

Frequency Range . . . . . 87.5 ~108 MHz
Usable Sensitivity
- Mono (S/N 26 dB, 75 ohms) . . . . . 1.0 μV
- Stereo (S/N 46 dB, 75 ohms) . . . . . 25 μV

Alternate Channel Selectivity 98 MHz . . . . . 60 dB
Signal-to-Noise Ratio at 98 MHz
- Weighted Mono . . . . . 74 dB
- Stereo . . . . . 64 dB

MW TUNER SECTION

Frequency Range . . . . . 531 ~ 1602 kHz
Usable Sensitivity (20 dB S/N 30% Mod., 1 MHz) . . . . . 500 μV/m
Selectivity . . . . . 30 dB

LW TUNER SECTION

Frequency Range . . . . . 153 ~ 281 kHz
Usable Sensitivity (20 dB S/N, 30% Mod, 250 kHz) . . . . . 1000 μV/m

GENERAL

Power Requirement
- N and T versions . . . . . 220/240 V AC, 50/60 Hz
- E version . . . . . 110/120/220/240 V AC, 50/60 Hz

Power Consumption at Rated Output, both Channels Operating . . . . . 270 W
Dimensions
- Panel Width . . . . . 420 mm
- Panel Height . . . . . 185 mm
- Depth . . . . . 260 mm

Weight
- Unit Alone . . . . . 9.5 kg

Specifications and appearance are subject to change for modification without notice.

MODEL PM-71

AUDIO SECTION

IHF Dynamic Power	
4 OHMS	115 W
8 OHMS	90 W
POWER OUTPUT PER CHANNEL	
DIN 4 OHMS	80 W
RMS 4 OHMS	70 W
DIN 8 OHMS	80 W
RMS 8 OHMS	70 W
TOTAL HARMONIC DISTORTION AT RMS 8 OHMS	0.05%
DAMPING FACTOR 8 OHMS (1 kHz)	35

PREAMPLIFIER SECTION

Frequency Response	
Phono (IEC RIAA)	±0.5 dB
Aux (±1 dB)	5 Hz ~ 40 kHz
Signal-to-Noise Ratio	
Phono	60 dB
Aux	80 dB
Input Sensitivity/Impedance	
Phono	2.8 mV/47 k ohms
Aux	160 mV/30 k ohms

MODEL ST-71/ST-71L

FM TUNER SECTION

Frequency Range	87.5 ~108 MHz
Usable Sensitivity	
Mono (S/N 26 dB, 75 ohms)	1.0 μV
Stereo (S/N 46 dB, 75 ohms)	25 μV
Alternate Channel Selectivity 98 MHz	60 dB
Signal-to-Noise Ratio at 98 MHz	
Weighted Mono	74 dB
Stereo	64 dB

MW TUNER SECTION

Frequency Range	531 ~ 1602 kHz
Usable Sensitivity (20 dB S/N 30% Mod., 1 MHz)	500 μV/m
Selectivity	30 dB

LW TUNER SECTION

Frequency Range	153 ~ 281 kHz
Usable Sensitivity (20 dB S/N, 30% Mod, 250 kHz)	1000 μV/m

GENERAL

Power Requirement N and T versions	220/240 V AC, 50/60 Hz
E version	110/120/220/240 V AC, 50/60 Hz
Power Consumption at Rated Output, both Channels Operating	330 W
Dimensions	
Panel Width	420 mm
Panel Height	185 mm
Depth	260 mm
Weight	
Unit Alone	9.5 kg

Specifications and appearance are subject to change for modification without notice.

Model TA-71L/TA-52L

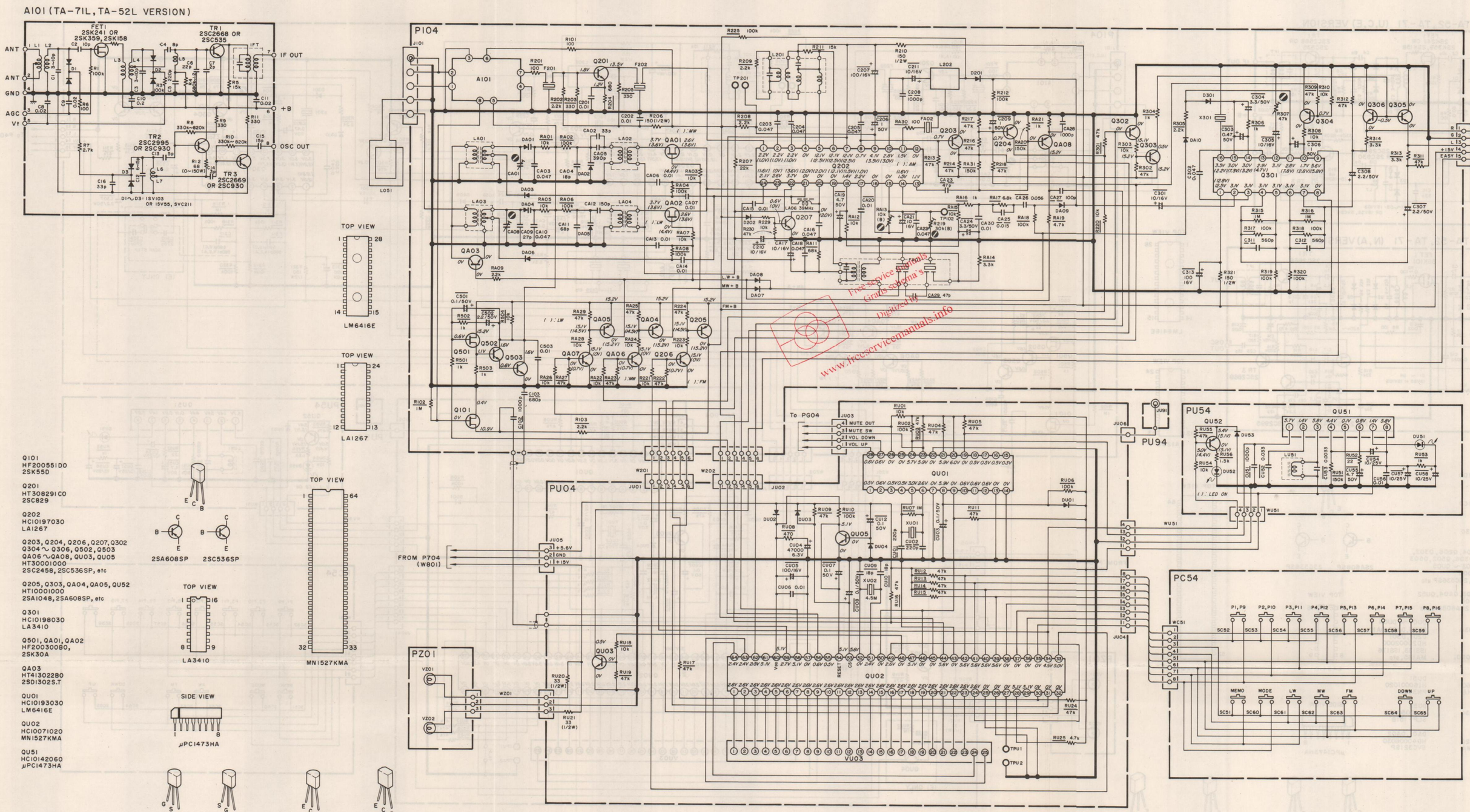

Q101
HF200551D0
2SK55D

Q201
HT308291C0
2SC829

Q202
HC10197030
LA1267

Q203, Q204, Q206, Q207, Q302
Q304 ~ Q306, Q502, Q503
Q406 ~ Q408, Q003, Q005
HT30001000
2SC2458, 2SC536SP, etc

Q205, Q303, QA04, QA05, QU52
HT10001000
2SA1048, 2SA608SP, etc

Q301
HC10198030
LA3410

Q501, QA01, QA02
HF20030080,
2SK30A

QA03
HT41302280
2SD1302S.T

QU01
HC10193030
LM6416E

QU02
HC10071020
MN1527KMA

QU51
HC10142060
μPC1473HA

"SERVICE INFORMATION IS FOR USE BY QUALIFIED RERSONNEL ONLY – ANY MISADJUSTMENT OR MISALIGNMENT MAY BE TREATED AS A NON-WARRANTY REPAIR BY ANY MARANTZ SERVICE CENTRE – "

Kind of Common Parts

RESISTOR

R*** (1) GD05 - - - 140, Carbon film fixed resistor, ±5% 1/4W
R*** (2) GD05 - - - 160, Carbon film fixed resistor, ±5% 1/6W

C*** : **CERAMIC CAP.**
(1) DD1 - - - - 370, Ceramic condenser, disc type (titan condenser) Temp. coeff. P350 ~ N1000 50V

C*** : **CERAMIC CAP.**
(1) DK16 - - - 300, High dielectric constant ceramic condenser, disc type (titan variable) Temp. chara. 2B4 50V

C*** : **ELECTROLY CAP. (⧺) / FILM CAP. (⧻)**
(1) EA - - - - - - 10, Electrolytic condenser, one-way lead type, tolerance ±20%
(2) DF15 - - - 350, Plastic film condenser, one-way type, Mylar, ±5% 50V

* In case of ordering the common parts, please establish the correct parts number of 10 figures by the procedure "ASSIGNMENT OF COMMON PARTS CODES"

NOTE ON SAFETY :
Symbol ⚠ Fire or electrical shock hazard. Only original parts should be used to replace any part marked with symbol ⚠. Any other component substitution (other than original type), may increase risk of fire or electrical shock hazard.

Components and wiring are subject to change for modification without notice.

13. SCHEMATIC DIAGRAM

Model TA-71/TA-52

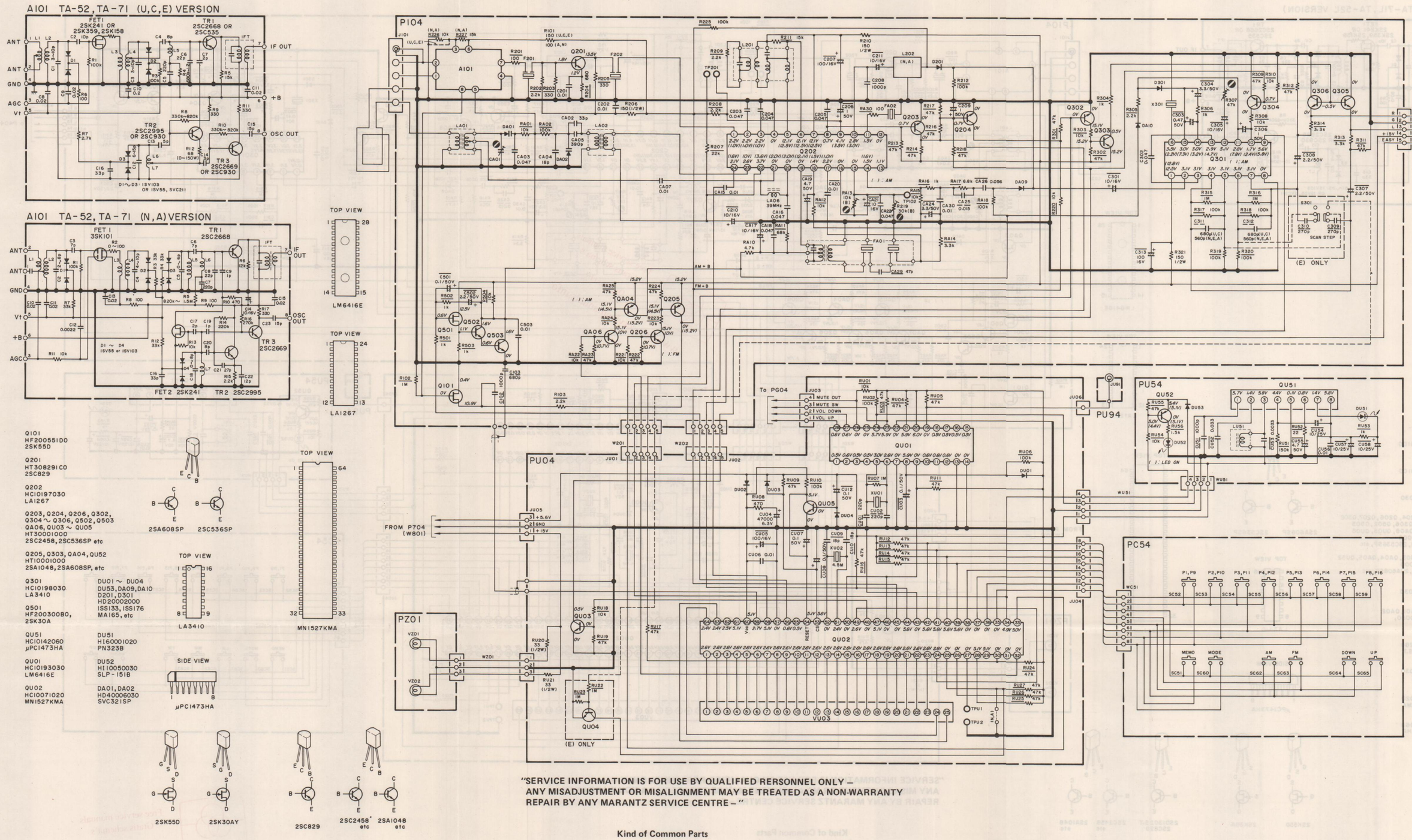

"SERVICE INFORMATION IS FOR USE BY QUALIFIED RERSONNEL ONLY – ANY MISADJUSTMENT OR MISALIGNMENT MAY BE TREATED AS A NON-WARRANTY REPAIR BY ANY MARANTZ SERVICE CENTRE – "

NOTE ON SAFETY :
Symbol ⚠ Fire or electrical shock hazard. Only original parts should be used to replace any part marked with symbol ⚠. Any other component substitution (other than original type), may increase risk of fire or electrical shock hazard.

Kind of Common Parts

RESISTOR

R*** (1) GD05 - - - 140, Carbon film fixed resistor, ±5% 1/4W
R*** (2) GD05 - - - 160, Carbon film fixed resistor, ±5% 1/6W

C*** : **CERAMIC CAP.**
(1) DD1 - - - - 370, Ceramic condenser, disc type (titan condenser) Temp. coeff. P350 ~ N1000 50V

C*** : **CERAMIC CAP.**
(1) DK16 - - - 300, High dielectric constant ceramic condenser, disc type (titan variable) Temp. chara. 2B4 50V

C*** : **ELECTROLY CAP. (⇶) / FILM CAP. (⇌)**
(1) EA - - - - - - 10, Electrolytic condenser, one-way lead type, tolerance ±20%
(2) DF15 - - - 350, Plastic film condenser, one-way type, Mylar, ±5% 50V

* In case of ordering the common parts, please establish the correct parts number of 10 figures by the procedure "ASSIGNMENT OF COMMON PARTS CODES"

Components and wiring are subject to change for modification without notice.

Model TA-71L

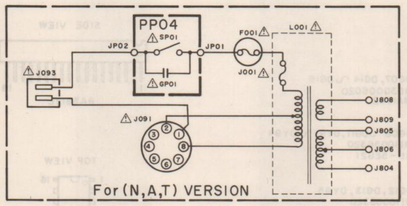

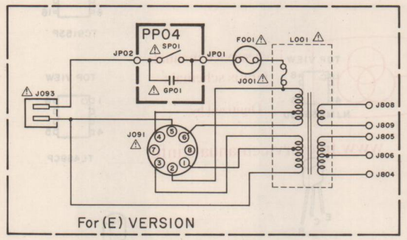

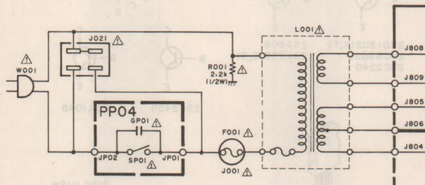

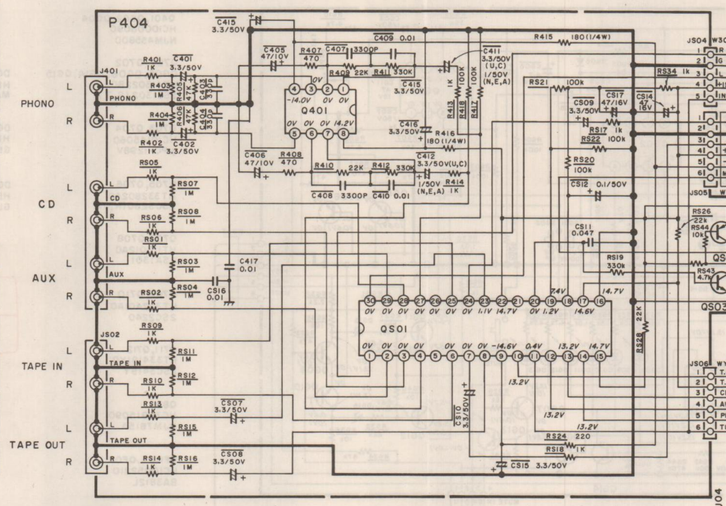

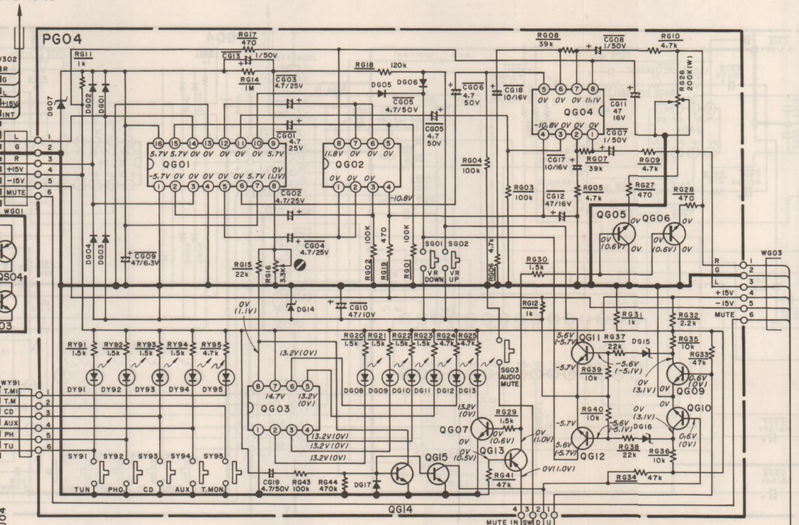

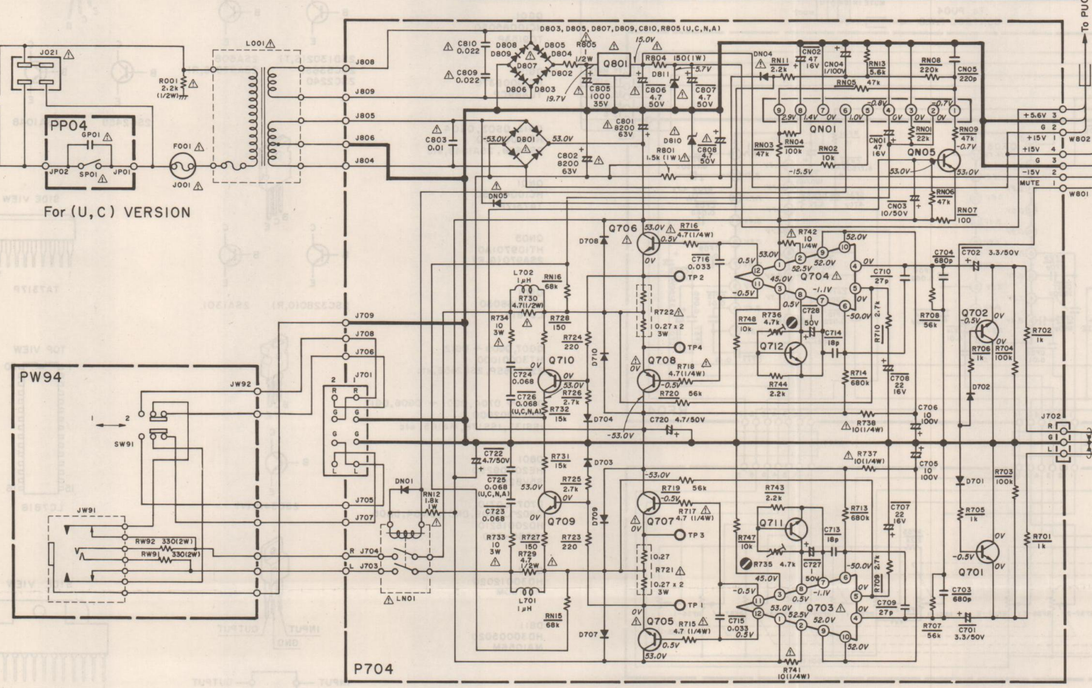

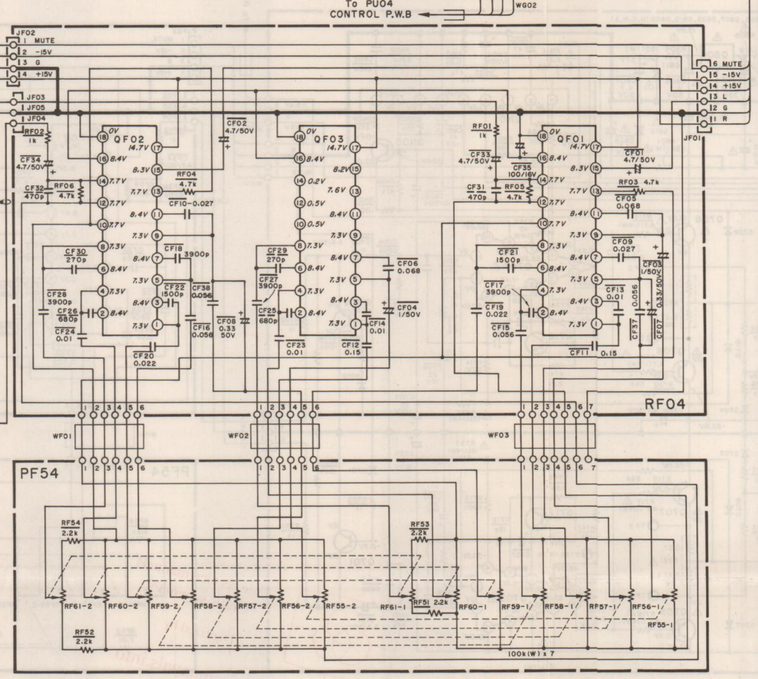

Q401, QG02, QG04
HC10008090
NJM4558DD

Q701, Q702
QG05, QG06, QG14, QG15
HT413022B0
2SD1302(S,T)

Q703, Q704
HC10145060
μPC-1298V

Q705, Q706
HT332802A0
2SC3280(R,O)

Q707, Q708
HT113012A0
2SA1301

Q709, Q710
HT322401A0
2SC2240

Q711, Q712
HT334191Y0
2SC3419Y

Q801
HC38915090
NJM7815A

QF01～QF03
HC10052210
BA3812L

QG01
HC10085050
TC9153P

QG03
HC10008370
TL489CP

QG13, QS03, QS04
HT10001000
2SA608, 2SA1048, etc

QN01
HC10042050
TA7317P

QN05
HT109701A0
2SA970(G,R)

QS01
HC10168030
LC7818

QG07, QG09 ～ QG12
HT300010 00
2SC5365P, 2SC245B, etc

D701～D704, DG01～DG06, DG17
HD20002000
ISS133, ISS176, MA165, etc

D801
HE20009290
S5VB20

D707～D710
D802～D809, DN01, DN04, DN05
HD20016210
ISR35-200

D810
HD30012020
MA1150M

D811
HD30005020
MA1056M

DG07, DG14～DG16
HD30006020
MA1062

DG08～DG11, DY91～DY94
HI10056320
GL-5EG21

DG12, DG13, DY95
HI10055320
GL-5HD21

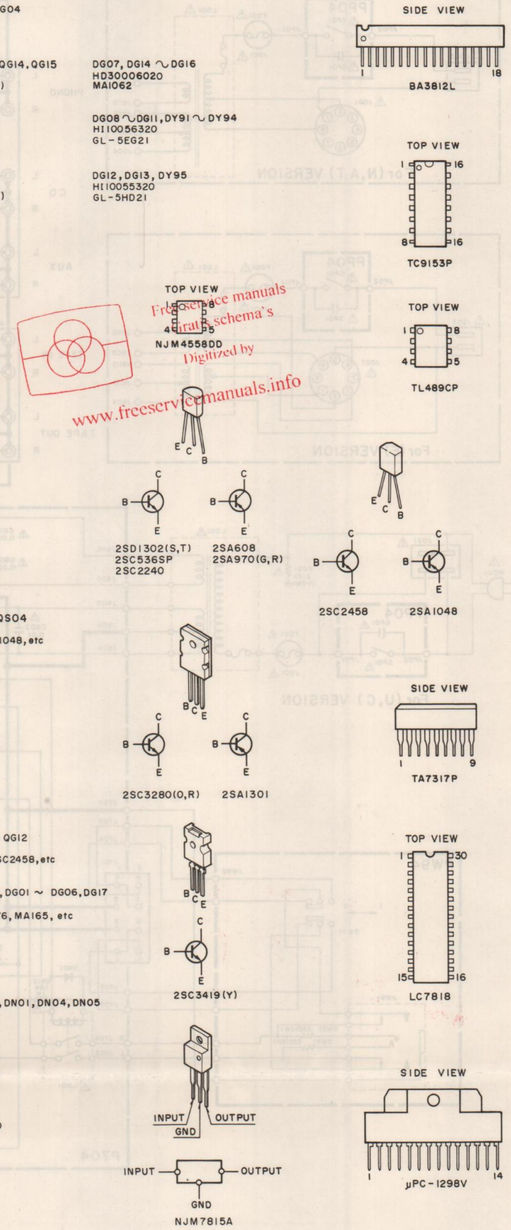

F001	FS10200800	FUSE 2.0A
L001	TS18507020	POWER TRANSF.
SC51 ～ SC60	SP01010970	PUSH SWITCH TACT
SC62 ～ SC65	SP01010970	PUSH SWITCH TACT
RF55 ～ RF61	RS01040460	VARIABLE 100KΩ
SY91 ～ SY95	SP01010970	PUSH SWITCH FUNCTION
RG16	RA04720750	TRIMMING 4.7KΩ
RG26	RX02040080	VARIABLE 200KΩ BALANCE
SG01 ～ SG03	SP01010970	PUSH SWITCH VOLUME
SP01	SP01011090	PUSH SWITCH POWER
VU01	IN10120170	LAMP 12V
VU02	IN10120170	LAMP 12V
VU03	HQ21001560	DISPLAY UNIT
XU02	XB108001L0	CRYSTAL 4.5MHz
A101	AV01202130	V.H.F TUNER
LA01	LA10295140	ANT COIL MW
LA02	LO10013400	OSC COIL MW
LA03	LA10295160	ANT COIL LW
LA04	LO10013410	OSC COIL LW
LA05	LI10013210	I.F.T AM
L201	LI20029050	I.F.T FM DET
L202	LS10295030	M.P.X COIL
RA13	RA01030750	TRIMMING 10KΩ
R219	RA01030750	TRIMMING 10KΩ
R307	RA04730750	TRIMMING 47KΩ
LN01	LY20240190	RELAY
R735	RA02220750	TRIMMING 2.2KΩ
R736	RA02220750	TRIMMING 2.2KΩ
SW91	SP02011330	PUSH SWITCH SPEAKER
CA01	CT12000090	TRIMMING 20PF
CA08	CT12000090	TRIMMING 20PF

NOTE ON SAFETY :
Symbol ⚠ Fire or electrical shock hazard. Only original parts should be used to replace any part marked with symbol ⚠. Any other component substitution (other than original type), may increase risk of fire or electrical shock hazard.

"SERVICE INFORMATION IS FOR USE BY QUALIFIED RERSONNEL ONLY – ANY MISADJUSTMENT OR MISALIGNMENT MAY BE TREATED AS A NON-WARRANTY REPAIR BY ANY MARANTZ SERVICE CENTRE – "

Kind of Common Parts

RESISTOR

R*** (1) GD05 - - - 140, Carbon film fixed resistor, ±5% 1/4W
R*** (2) GD05 - - - 160, Carbon film fixed resistor, ±5% 1/6W

C*** : **CERAMIC CAP.**
(1) DD1 - - - - 370, Ceramic condenser, disc type (titan condenser) Temp. coeff. P350 ～ N1000 50V

C*** : **CERAMIC CAP.**
(1) DK16 - - - 300, High dielectric constant ceramic condenser, disc type (titan variable) Temp. chara. 2B4 50V

C*** : **ELECTROLY CAP. (⧺) / FILM CAP. (⧻)**
(1) EA - - - - - - 10, Electrolytic condenser, one-way lead type, tolerance ±20%
(2) DF15 - - - 350, Plastic film condenser, one-way type, Mylar, ±5% 50V

* In case of ordering the common parts, please establish the correct parts number of 10 figures by the procedure "ASSIGNMENT OF COMMON PARTS CODES"

Components and wiring are subject to change for modification without notice.

Model TA-71

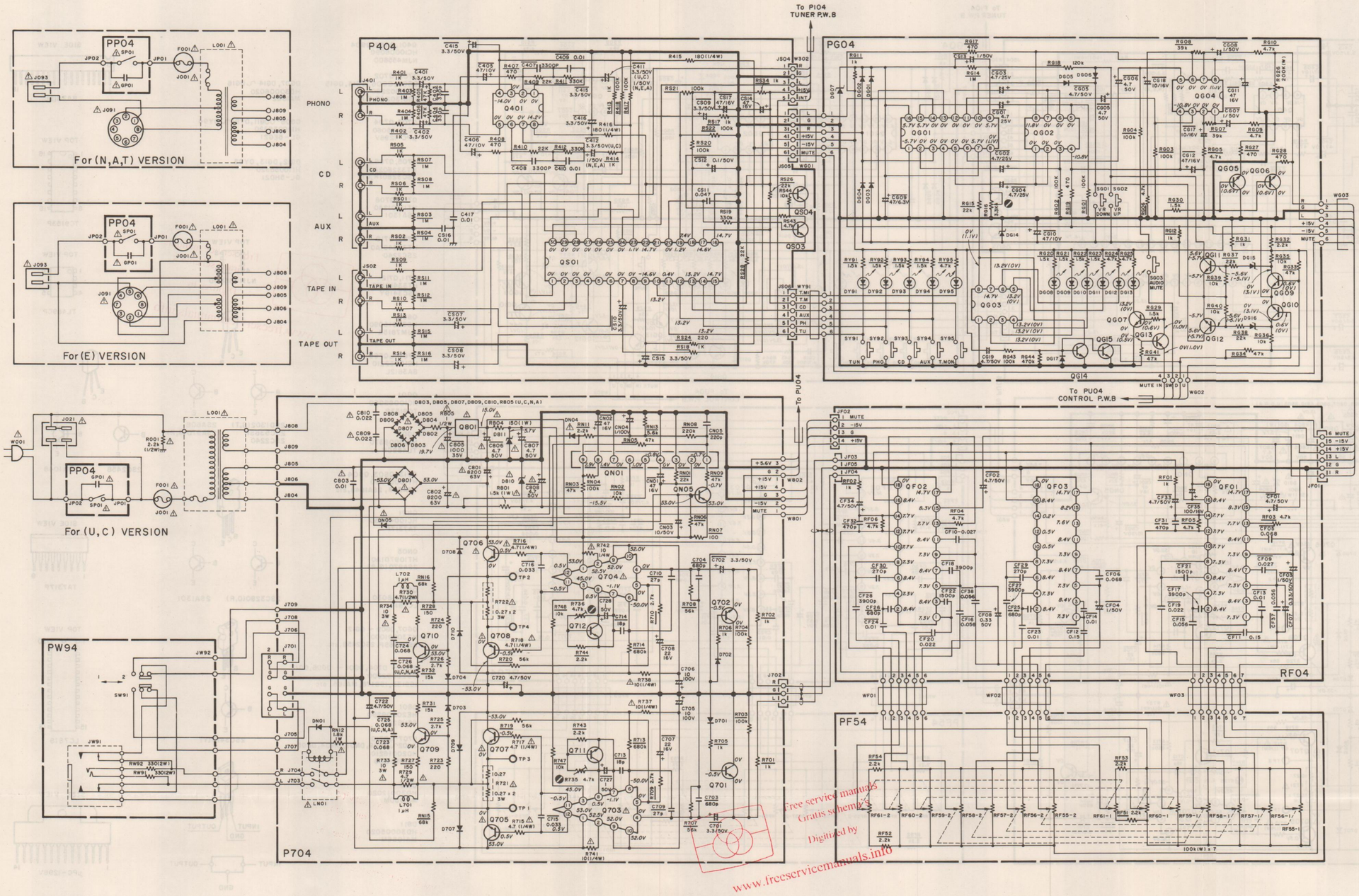

Q401, Q402, Q404
HC10008090
NJM4558DD

Q701, Q702
Q605, Q606, Q614, Q615
HT41322B0
2SD1302(S,T)

Q703, Q704
HC10145060
μPC-1298V

Q705, Q706
HT33280AO
2SC3280(R,O)

Q707, Q708
HT113012AO
2SA1301

Q709, Q710
HT322401AO
2SC2240

Q711, Q712
HT334191YO
2SC3419Y

Q801
HC38915090
NJM7815A

Q501 ~ Q503
HC10052210
BA3812L

Q601
HC10085050
TC9153P

Q603
HC10008370
TL489CP

Q613, Q503, Q504
HT10001000
2SA608, 2SA1048, etc

QN01
HC10042050
TA7317P

QN05
HT109701AO
2SA970(G,R)

QS01
HC10168030
LC7818

QG07, QG09 ~ QG12
HT30001000
2SC536SP, 2SC2458, etc

D701 ~ D704, DG01 ~ DG06, DG17
HD20002000
1SS133, 1SS176, MA165, etc

D801
HE20009290
S5VB20

D707 ~ D710
D802 ~ D809, DN01, DN04, DN05
HD20016210
1SR35-200

D810
HD30012020
MA1150M

D811
HD30005020
MA1056M

DG07, DG14 ~ DG16
HD30006020
MA1062

DG08 ~ DG11, DY91 ~ DY94
HI10056320
GL-5EG21

DG12, DG13, DY95
HI10055320
GL-5HD21

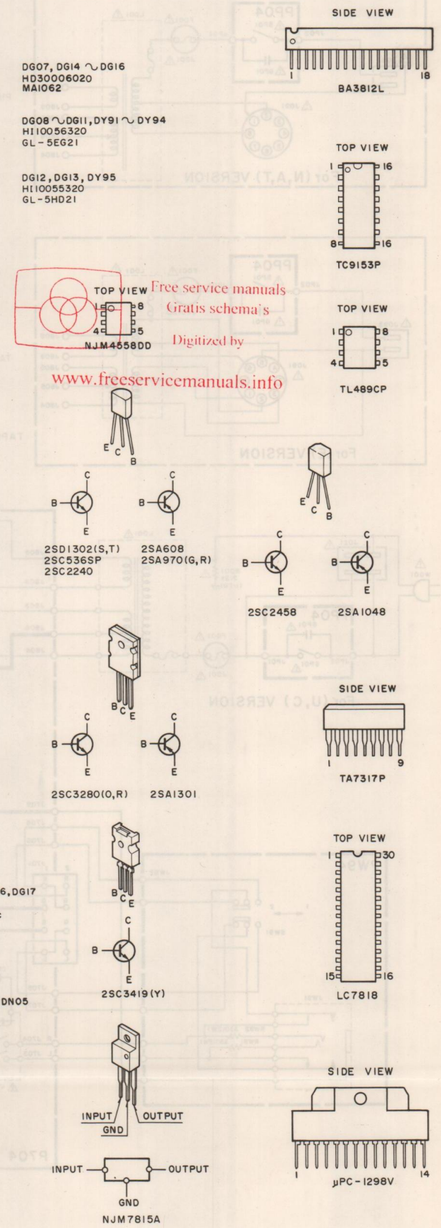

F001	FS10200800	FUSE 2.0A [N, E, A]
F001	FS10400500	FUSE 4.0A [U, C]
L001	TS18507020	POWER TRANSF. [N, A]
	TS18507040	POWER TRANSF. [E]
	TS18507010	POWER TRANSF. [U, C]
SC51		
~	SP01010970	PUSH SWITCH TACT
SC60		
SC62		
~	SP01010970	PUSH SWITCH TACT
SC65		
RF55		
~	RS01040460	VARIABLE 100KΩ
RF61		
SY91		
~	SP01010970	PUSH SWITCH FUNCTION
SY95		
RG16	RA04720750	TRIMMING 4.7KΩ
RG26	RX02040080	VARIABLE 200KΩ BALANCE
SG01		
	SP01010970	PUSH SWITCH VOLUME
SG03		
SP01	SP01011090	PUSH SWITCH POWER
VU01	IN10120170	LAMP 12V
VU02	IN10120170	LAMP 12V
VU03	H021001560	DISPLAY UNIT
XU02	XB108001L0	CRYSTAL 4.5MHz
SW91	SP02011330	PUSH SWITCH SPEAKER

CA01	CT12000090	TRIMMING 20PF
A101	AV01202180	V.H.F. TUNER [N, A]
A101	AV01202130	V.H.F. TUNER [U, C, E]
LA01	LA10295140	ANT. COIL AM
LA02	LO10013400	OSC COIL AM
LA05	LI10013210	I.F.T AM
L201	LI20029050	I.F.T FM DET
L202	LS10295030	M.P.X COIL [N,A]
RA13	RA01030750	TRIMMING 10KΩ
R219	RA01030750	TRIMMING 10KΩ
R307	RA04730750	TRIMMING 47KΩ
S301	SS02020730	SLIDE SWITCH [E]
LN01	LY20240190	RELAY
R735	RA02220750	TRIMMING 2.2KΩ
R736	RA02220750	TRIMMING 2.2KΩ

NOTE ON SAFETY :
Symbol ⚠ Fire or electrical shock hazard. Only original parts should be used to replace any part marked with symbol ⚠. Any other component substitution (other than original type), may increase risk of fire or electrical shock hazard.

"SERVICE INFORMATION IS FOR USE BY QUALIFIED RERSONNEL ONLY – ANY MISADJUSTMENT OR MISALIGNMENT MAY BE TREATED AS A NON-WARRANTY REPAIR BY ANY MARANTZ SERVICE CENTRE – "

Kind of Common Parts

RESISTOR
R*** (1) GD05 - - - 140, Carbon film fixed resistor, ±5% 1/4W
R*** (2) GD05 - - - 160, Carbon film fixed resistor, ±5% 1/6W

C*** : **CERAMIC CAP.**
(1) DD1 - - - - 370, Ceramic condenser, disc type (titan condenser) Temp. coeff. P350 ~ N1000 50V

C*** : **CERAMIC CAP.**
(1) DK16 - - - 300, High dielectric constant ceramic condenser, disc type (titan variable) Temp. chara. 2B4 50V

C*** : **ELECTROLY CAP. (⇄) / FILM CAP. (⇌)**
(1) EA - - - - - - 10, Electrolytic condenser, one-way lead type, tolerance ±20%
(2) DF15 - - - 350, Plastic film condenser, one-way type, Mylar, ±5% 50V

*In case of ordering the common parts, please establish the correct parts number of 10 figures by the procedure "ASSIGNMENT OF COMMON PARTS CODES"

Components and wiring are subject to change for modification without notice.

Model TA-52L

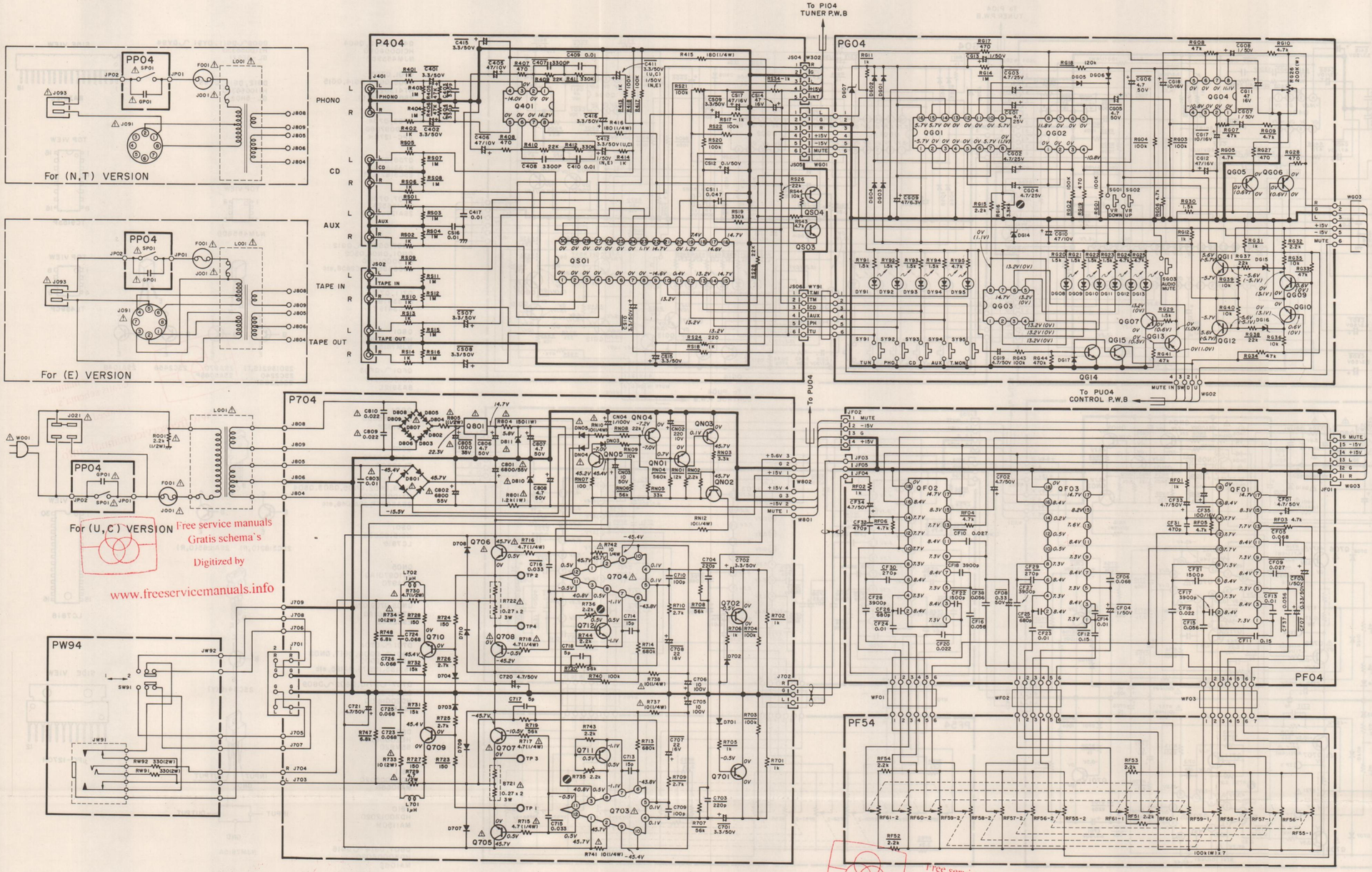

Q401, Q602, Q604
HC10008090
NJM4558DD

Q701, Q702
Q605, Q606, Q614, Q615
HT41302280
2SD1302(S,T)

Q703, Q704
HC10097060
μPC-1270H

Q705, Q706
HT33182A0
2SC3182(O,R)

Q707, Q708
HT112652A0
2SA1265(O,R)

Q607, Q609 ∿ Q612
Q601, Q604, Q602
HT30001000
2SC5536SP, 2SC2458, etc

Q711, Q712
HT33419IY0
2SC3419Y

Q801
HC38915090
NJM7815A

Q601 ∿ Q603
HC10052210
BA3812L

Q601
HC10085050
TC9153P

Q603
HC10008370
TL489CP

Q613, Q602, Q605, Q603, Q604
HT10001000
2SA608SP, 2SA1048, etc

Q501
HC10168030
LC7818

Q605
HT10970IA0
2SA970

Q603, Q709, Q710
HT32240IA0
2SC2240

D701 ∿ D704
D601 ∿ D606, D617, DN03
HD20002000
1SS133, 1SS176, MA165, etc

D707 ∿ D710, D802 ∿ D809
DN04, DN05
HD20016210
1SR35

D801
HE20009290
S5VB20

D811
HD30005020
MA1056M

D810
HD30012020
MA1150M

D607, D614 ∿ D616
HD30006020
MA1062

D608 ∿ D611, DY91 ∿ DY94
HI10056320
GL-5EG21

D612, D613, DY95
HI10055320
GL-5HD21

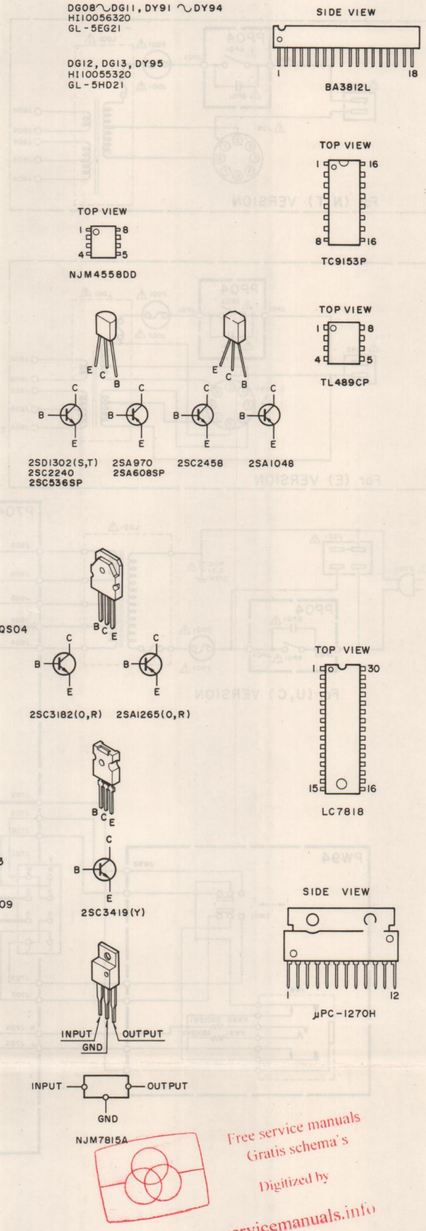

F001	FS10160800	FUSE 1.6A
L001	TS17633010	POWER TRANSF.
SC51 ∿ SC60	SP01010970	PUSH SWITCH TACT
SC62 ∿ SC65	SP01010970	PUSH SWITCH TACT
RF55 ∿ RF61	RS01040460	VARIABLE 100KΩ
SY91 ∿ SY95	SP01010970	PUSH SWITCH FUNCTION
RG16	RA04720750	TRIMMING 4.7KΩ
RG26	RX02040080	VARIABLE 200KΩ BALANCE
SG01 ∿ SG03	SP01010970	PUSH SWITCH VOLUME
SP01	SP01011090	PUSH SWITCH POWER
VU01	IN10120170	LAMP 12V
VU02	IN10120170	LAMP 12V
VU03	HQ21001560	DISPLAY UNIT
XU02	XB108001L0	CRYSTAL 4.5MHz
SW91	SP02011300	PUSH SWITCH SPEAKER
A101	AV01202130	V.H.F TUNER
CA01	CT12000090	TRIMMING 20PF
CA08	CT12000090	TRIMMING 20PF
LA01	LA10295140	ANT COIL MW
LA02	LO10013400	OSC COIL MW
LA03	LA10295160	ANT COIL LW
LA04	LO10013410	O.S.C COIL LW
LA05	LI10013210	I.F.T AM
L201	LI20029050	I.F.T FM DET
L202	LS10295030	M.P.X COIL
RA13	RA01030750	TRIMMING 10KΩ
R219	RA01030750	TRIMMING 10KΩ
R307	RA04730750	TRIMMING 47KΩ
R735	RA04720750	TRIMMING 4.7KΩ
R736	RA04720750	TRIMMING 4.7KΩ

"SERVICE INFORMATION IS FOR USE BY QUALIFIED RERSONNEL ONLY – ANY MISADJUSTMENT OR MISALIGNMENT MAY BE TREATED AS A NON-WARRANTY REPAIR BY ANY MARANTZ SERVICE CENTRE – "

Kind of Common Parts

RESISTOR

R*** (1) GD05 - - - 140, Carbon film fixed resistor, ±5% 1/4W
R*** (2) GD05 - - - 160, Carbon film fixed resistor, ±5% 1/6W

C*** : **CERAMIC CAP.**
(1) DD1 - - - - 370, Ceramic condenser, disc type (titan condenser) Temp. coeff. P350 ~ N1000 50V

C*** : **CERAMIC CAP.**
(1) DK16 - - - 300, High dielectric constant ceramic condenser, disc type (titan variable) Temp. chara. 2B4 50V

C*** : **ELECTROLY CAP. (⇌) / FILM CAP. (⇌)**
(1) EA - - - - - - 10, Electrolytic condenser, one-way lead type, tolerance ±20%
(2) DF15 - - - 350, Plastic film condenser, one-way type, Mylar, ±5% 50V

* In case of ordering the common parts, please establish the correct parts number of 10 figures by the procedure "ASSIGNMENT OF COMMON PARTS CODES"

NOTE ON SAFETY :
Symbol ⚠ Fire or electrical shock hazard. Only original parts should be used to replace any part marked with symbol ⚠. Any other component substitution (other than original type), may increase risk of fire or electrical shock hazard.

Components and wiring are subject to change for modification without notice.

Model TA-52

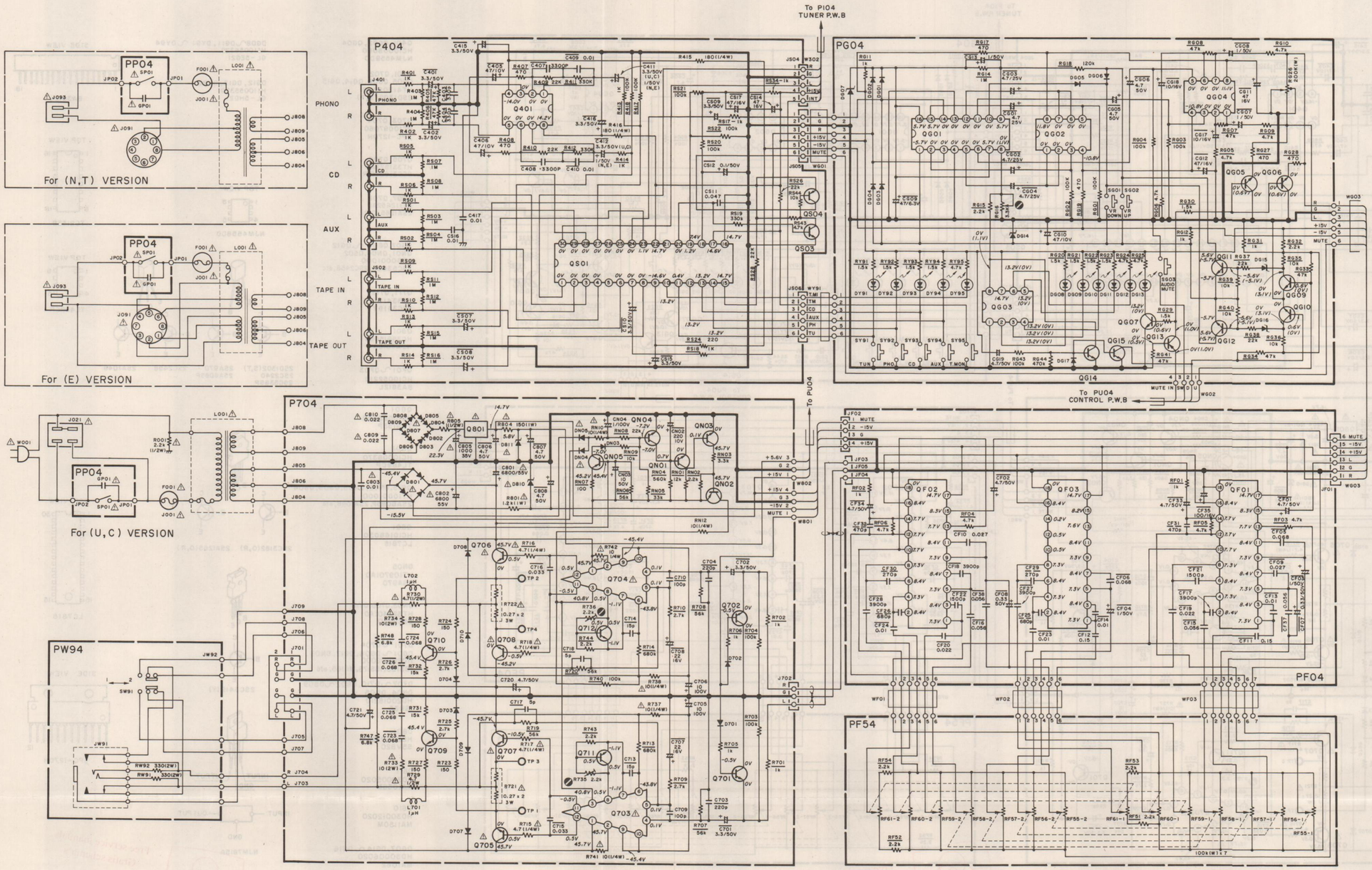

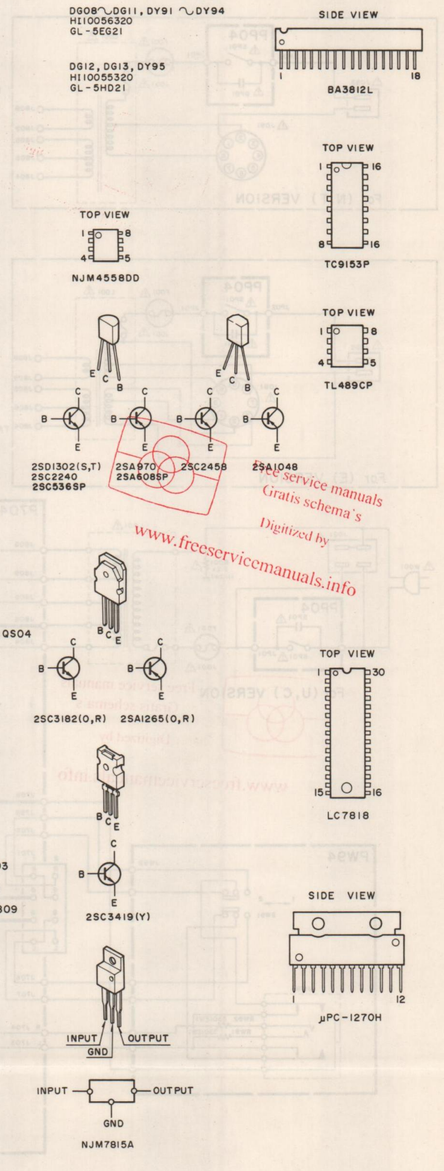

F001	FS10160800	FUSE 1.6A [N, E]
F001	FS10350500	FUSE 3.5A [U, C]
L001	TS17633010	POWER TRANSF. [N]
L001	TS17633020	POWER TRANSF. [E]
L001	TS18620070	POWER TRANSF. [U]
SC51		
~	SP01010970	PUSH SWITCH TACT
SC60		
SC62		
~	SP01010970	PUSH SWITCH TACT
SC65		

RF55		
~	RS01040460	VARIABLE 100KΩ
RF61		
SY91		
~	SP01010970	PUSH SWITCH FUNCTION
SY95		
RG16	RA04720750	TRIMMING 4.7KΩ
RG26	RX02040080	VARIABLE 200KΩ BALANCE
SG01		
	SP01010970	PUSH SWITCH VOLUME
SG03		
SP01	SP01011090	PUSH SWITCH POWER
VU01	IN10120170	LAMP 12V
VU02	IN10120170	LAMP 12V
VU03	HQ21001560	DISPLAY UNIT
XU02	XB108001L0	CRYSTAL 4.5MHz
SW91	SP02011300	PUSH SWITCH SPEAKER

A101	AV01202130	V.H.F TUNER [U.C.E]
A101	AV01202180	V.H.F TUNER
CA01	CT12000090	TRIMMING 20PF
LA01	LA10295140	ANT COIL MW
LA02	LO10013400	OSC COIL MW
LA05	LI10013210	I.F.T AM
L201	LI20029050	I.F.T FM DET
L202	LS10295030	M.P.X COIL
RA13	RA01030750	TRIMMING 10KΩ
R219	RA01030750	TRIMMING 10KΩ
R307	RA04730750	TRIMMING 47KΩ
S301	SS02020730	SLIDE SWITCH
R735	RA04720750	TRIMMING 4.7KΩ
R736	RA04720750	TRIMMING 4.7KΩ

"SERVICE INFORMATION IS FOR USE BY QUALIFIED RERSONNEL ONLY – ANY MISADJUSTMENT OR MISALIGNMENT MAY BE TREATED AS A NON-WARRANTY REPAIR BY ANY MARANTZ SERVICE CENTRE – "

Kind of Common Parts

RESISTOR

R*** (1) GD05 - - - 140, Carbon film fixed resistor, ±5% 1/4W
R*** (2) GD05 - - - 160, Carbon film fixed resistor, ±5% 1/6W

C*** : **CERAMIC CAP.**
(1) DD1 - - - - 370, Ceramic condenser, disc type (titan condenser) Temp. coeff. P350 ~ N1000 50V

C*** : **CERAMIC CAP.**
(1) DK16 - - - 300, High dielectric constant ceramic condenser, disc type (titan variable) Temp. chara. 2B4 50V

C*** : **ELECTROLY CAP. (⇌) / FILM CAP. (⇌)**
(1) EA - - - - - - 10, Electrolytic condenser, one-way lead type, tolerance ±20%
(2) DF15 - - - 350, Plastic film condenser, one-way type, Mylar, ±5% 50V

* In case of ordering the common parts, please establish the correct parts number of 10 figures by the procedure "ASSIGNMENT OF COMMON PARTS CODES"

NOTE ON SAFETY :
Symbol ⚠ Fire or electrical shock hazard. Only original parts should be used to replace any part marked with symbol ⚠. Any other component substitution (other than original type), may increase risk of fire or electrical shock hazard.

Components and wiring are subject to change for modification without notice.

marantz®

Printed in Japan

189H855
1986/2