Service Manual

UD7006 /N1SG/N1B/U1B
S1SG/S1B

SUPER AUDIO CD/ BLU-RAY DISC PLAYER

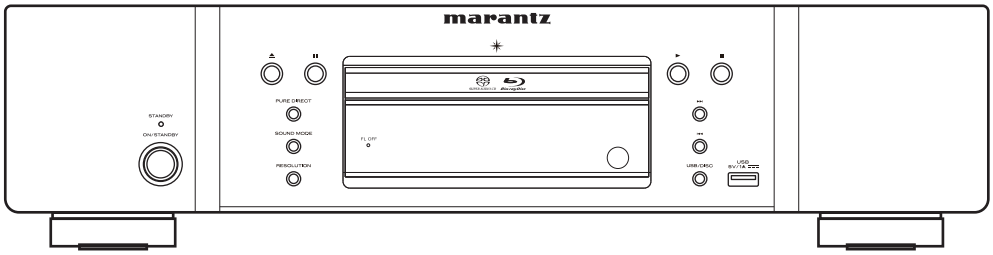

- For purposes of improvement, specifications and design are subject to change without notice.
- Please use this service manual with referring to the operating instructions without fail.
- Some illustrations using in this service manual are slightly different from the actual set.

marantz®

UD7006

Ver. 7

Please refer to the MODIFICATION NOTICE.

S0534-1V07DM/DG1209

MARANTZ DESIGN AND SERVICE

Using superior design and selected high grade components, **marantz** company has created the ultimate in stereo sound. Only original **marantz** parts can insure that your **marantz** product will continue to perform to the specifications for which it is famous.
Parts for your **marantz** equipment are generally available to our National Marantz Subsidiary or Agent.

ORDERING PARTS :

Parts can be ordered either by mail or by Fax.. In both cases, the correct part number has to be specified.
The following information must be supplied to eliminate delays in processing your order :

1. Complete address
2. Complete part numbers and quantities required
3. Description of parts
4. Model number for which part is required
5. Way of shipment
6. Signature : any order form or Fax. must be signed, otherwise such part order will be considered as null and void.

USA
MARANTZ AMERICA, INC
100 CORPORATE DRIVE
MAHWAH, NEW JERSEY 07430
USA

EUROPE / TRADING
D&M EUROPE B. V.
P. O. BOX 8744, BUILDING SILVERPOINT
BEEMDSTRAAT 11, 5653 MA EINDHOVEN
THE NETHERLANDS
PHONE : +31 - 40 - 2507844
FAX : +31 - 40 - 2507860

CANADA
D&M Canada Inc.
5-505 APPLE CREEK BLVD.
MARKHAM, ONTARIO L3R 5B1
CANADA
PHONE : 905 - 415 - 9292
FAX : 905 - 475 - 4159

JAPAN
D&M Holdings Inc.
D&M BUILDING, 2-1 NISSHIN-CHO,
KAWASAKI-KU, KAWASAKI-SHI,
KANAGAWA, 210-8569 JAPAN

株式会社 ディーアンドエムホールディングス

本 社 〒210-8569
神奈川県川崎市川崎区日進町2-1 D&Mビル

KOREA
D&M SALES AND MARKETING KOREA LTD.
2F,YEON BLDG.,
88-5, BANPO-DONG, SEOCHO-GU,
SEOUL KOREA
PHONE : +82 - 2 - 715 - 9041
FAX : +82 - 2 - 715 - 9040

CHINA
D&M SALES AND MARKETING SHANGHAI LTD.
ROOM.808 SHANGHAI AIRPORT CITY TERMINAL
NO.1600 NANJING (WEST) ROAD, SHANGHAI,
CHINA. 200040
TEL : 021 - 6248 - 5151
FAX : 021 - 6248 - 4434

NOTE ON SAFETY :

Symbol ⚠ Fire or electrical shock hazard. Only original parts should be used to replaced any part marked with symbol ⚠.
Any other component substitution (other than original type), may increase risk of fire or electrical shock hazard.

安全上の注意：

⚠がついている部品は、安全上重要な部品です。必ず指定されている部品番号の部品を使用して下さい。

SHOCK, FIRE HAZARD SERVICE TEST :

CAUTION : After servicing this appliance and prior to returning to customer, measure the resistance between either primary AC cord connector pins (with unit NOT connected to AC mains and its Power switch ON), and the face or Front Panel of product and controls and chassis bottom.
Any resistance measurement less than 1 Megohms should cause unit to be repaired or corrected before AC power is applied, and verified before it is return to the user/customer.
Ref. UL Standard No. 60065.

In case of difficulties, do not hesitate to contact the Technical Department at above mentioned address.

091105DM/DG

SAFETY PRECAUTIONS

The following items should be checked for continued protection of the customer and the service technician.

LEAKAGE CURRENT CHECK

Before returning the set to the customer, be sure to carry out either (1) a leakage current check or (2) a line to chassis resistance check. If the leakage current exceeds 0.5 milliamps, or if the resistance from chassis to either side of the power cord is less than 460 kohms, the set is defective.
Be sure to test for leakage current with the AC plug in both polarities, in addition, when the set's power is in each state (on, off and standby mode), if applicable.

CAUTION Please heed the following cautions and instructions during servicing and inspection.

◎ Heed the cautions!

Cautions which are delicate in particular for servicing are labeled on the cabinets, the parts and the chassis, etc. Be sure to heed these cautions and the cautions described in the handling instructions.

◎ Cautions concerning electric shock!

(1) An AC voltage is impressed on this set, so if you touch internal metal parts when the set is energized, you may get an electric shock. Avoid getting an electric shock, by using an isolating transformer and wearing gloves when servicing while the set is energized, or by unplugging the power cord when replacing parts, for example.
(2) There are high voltage parts inside. Handle with extra care when the set is energized.

◎ Caution concerning disassembly and assembly!

Through great care is taken when parts were manufactured from sheet metal, there may be burrs on the edges of parts. The burrs could cause injury if fingers are moved across them in some rare cases. Wear gloves to protect your hands.

◎ Use only designated parts!

The set's parts have specific safety properties (fire resistance, voltage resistance, etc.). Be sure to use parts which have the same properties for replacement. The burrs have the same properties. In particular, for the important safety parts that are indicated by the ⚠ mark on schematic diagrams and parts lists, be sure to use the designated parts.

◎ Be sure to mount parts and arrange the wires as they were originally placed!

For safety seasons, some parts use tapes, tubes or other insulating materials, and some parts are mounted away from the surface of printed circuit boards.
Care is also taken with the positions of the wires by arranging them and using clamps to keep them away from heating and high voltage parts, so be sure to set everything back as it was originally placed.

◎ Make a safety check after servicing!

Check that all screws, parts and wires removed or disconnected when servicing have been put back in their original positions, check that no serviced parts have deteriorate the area around. Then make an insulation check on the external metal connectors and between the blades of the power plug, and otherwise check that safety is ensured.

(Insulation check procedure)
Unplug the power cord from the power outlet, disconnect the antenna, plugs, etc., and on the power. Using a 500V insulation resistance tester, check that the insulation resistance value between the inplug and the externally exposed metal parts (antenna terminal, headphones terminal, input terminal, etc.) is 1MΩ or greater. If it is less, the set must be inspected and repaired.

CAUTION Concerning important safety parts

Many of the electric and the structural parts used in the set have special safety properties. In most cases these properties are difficult to distinguish by sight, and the use of replacement parts with higher ratings (rated power and withstand voltage) does not necessarily guarantee that safety performance will be preserved. Parts with safety properties are indicated as shown below on the wiring diagrams and the parts list in this service manual. Be sure to replace them with the parts which have the designated part number.

(1) Schematic diagrams.....Indicated by the ⚠ mark.
(2) Parts lists.....Indicated by the ⚠ mark.
The use of parts other than the designated parts could cause electric shocks, fires or other dangerous situations.

NOTE FOR SCHEMATIC DIAGRAM

WARNING:
Parts indicated by the ⚠ mark have critical characteristics. Use ONLY replacement parts recommended by the manufacturer.
CAUTION:
Before returning the set to the customer, be sure to carry out either (1) a leakage current check or (2) a line to chassis resistance check. If the leakage current exceeds 0.5 milliamps, or if the resistance from chassis to either side of the power cord is less than 460 kohms, the set is defective.
WARNING:
DO NOT return the set to the customer unless the problem is identified and remedied.
NOTICE:
ALL RESISTANCE VALUES IN OHM. k=1,000 OHM / M=1,000,000 OHM
ALL CAPACITANCE VALUES ARE EXPRESSED IN MICRO FARAD, UNLESS OTHERWISE INDICATED. P INDICATES MICRO-MICRO FARAD. EACH VOLTAGE AND CURRENT ARE MEASURED AT NO SIGNAL INPUT CONDITION. CIRCUIT AND PARTS ARE SUBJECT TO CHANGE WITHOUT PRIOR NOTICE.

NOTE FOR PARTS LIST

1. Parts indicated by "nsp" on this table cannot be supplied.
2. When ordering a part, make a clear distinction between "1" and "I" (i) to avoid mis-supplying.
3. A part ordered without specifying its part number can not be supplied.
4. Part indicated by "★" mark is not illustrated in the exploded view.
5. General-purpose Carbon Film Resistor in the P.W.Board parts list. (Refer to the Schematic Diagram for those parts.)
6. General-purpose Carbon Chip Resistors are not included are not included in the P.W.Board parts list. (Refer to the Schematic Diagram for those parts.)

WARNING: Parts indicated by the ⚠ mark have critical characteristics. Use ONLY replacement parts recommended by the manufacturer.

● Resistors

Ex.: RN 14K 2E 182 G FR

Type / Shape and performance / Power / Resistance / Allowable error / Others

RD : Carbon	2B : 1/8 W	F : ±1%	P : Pulse-resistant type
RC : Composition	2E : 1/4 W	G : ±2%	NL : Low noise type
RS : Metal oxide film	2H : 1/2 W	J : ±5%	NB : Non-burning type
RW: winding	3A : 1 W	K : ±10%	FR : Fuse-resistor
RN : Metal film	3D : 2 W	M : ±20%	F : Lead wire forming
RK : Metal mixture	3F : 3 W		
	3H : 5 W		

* Resistance

1 8 2 ⇨ 1800ohm=1.8kohm
Indicates number of zeros after effective number.
2-digit effective number.

1 R 2 ⇨ 1.2ohm
1-digit effective number.
2-digit effective number, decimal point indicated by R.
: Units: ohm

● Capacitors

Ex.: CE 04W 1H 3R2 M BP

Type / Shape and performance / Dielectric strength / Capacity / Allowable error / Others

CE : Aluminum foil electrolytic	0J : 6.3 V	F : ±1%	HS : High stability type
CA : Aluminium solid electrolytic	1A : 10 V	G : ±2%	BP : Non-polar type
CS : Tantalum electrolytic	1C : 16 V	J : ±5%	HR : Ripple-resistant type
CQ : Film	1E : 25 V	K : ±10%	DL : For change and discharge
CK : Ceramic	1V : 35 V	M : ±20%	HF : For assuring high frequency
CC : Ceramic	1H : 50 V	Z : ±80%	U : UL part
CP : Oil	2A : 100 V	: - 20%	C : CSA part
CM : Mica	2B : 125 V	P : +100%	W : UL-CSA part
CF : Metallized	2C : 160 V	C : ±0.25pF	F : Lead wire forming
CH : Metallized	2D : 200 V	D : ±0.5pF	
	2E : 250 V	= : Others	
	2H : 500 V		
	2J : 630 V		

* Capacity (electrolyte only)

2 2 2 ⇨ 2200 μF
Indicates number of zeros after effective number.
2-digit effective number.
・Units: μF.

2 R 2 ⇨ 2.2 μF
1-digit effective number.
2-digit effective number, decimal point indicated by R
・Units: μF.

* Capacity (except electrolyte)

2 2 2 ⇨ 2200pF=0.0022 μF
Indicates number of zeros after effective number. (More than 2)
2-digit effective number.
・Units:pF

2 2 1 ⇨ 220pF
Indicates number of zeros after effective number. (0 or 1)
2-digit effective number.
・Units:pF

・ When the dielectric strength is indicated in AC,"AC" is included after the dielectric strength value.

WARNING AND LASER SAFETY INSTRUCTIONS

GB **WARNING**

All ICs and many other semi-conductors are susceptible to electrostatic discharges (ESD).
Careless handling during repair can reduce life drastically.
When repairing, make sure that you are connected with the same potential as the mass of the set via a wrist wrap with resistance.
Keep components and tools also at this potential.

ESD

NL **WAARSCHUWING**

Alle IC's en vele andere halfgeleiders zijn gevoelig voor elektrostatische ontladingen (ESD).
Onzorgvuldig behandelen tijdens reparatie kan de levensduur drastisch doen verminderen.
Zorg ervoor dat u tijdens reparatie via een polsband met weerstand verbonden bent met apparaat.
Houd componenten en hulpmiddelen ook op ditzelfde potentiaal.

F **ATTENTION**

Tous les IC et beaucoup d'autres semiconducteurs sont sensibles aux décharges statiques (ESD).
Leur longévité pourrait être considérablement écourtée par le fait qu'aucune précaution n'est prise a leur manipulation.
Lors de réparations, s'assurer de bien être relié au même potentiel que la masse de l'appareil et enfiler le bracelet serti d'une résistance de sécurité.
Veiller a ce que les composants ainsi que les outils que l'on utilise soient également a ce potentiel.

D **WARNUNG**

Alle IC und viele andere Halbleiter sind empfindlich gegen elektrostatische Entladungen (ESD).
Unsorgfältige Behandlung bei der Reparatur kann die Lebensdauer drastisch vermindern.
Sorgen sie dafür, das Sie im Reparaturfall dem Massepotential des Gerätes verbunden sind.
Halten Sie Bauteile und Hilfsmittel ebenfalls über ein Pulsarmband mit Widerstand mit auf diesem Potential.

I **AVVERTIMENTO**

Tutti IC e parecchi semi-conduttori sono sensibili alle scariche statiche (ESD).
La loro longevita potrebbe essere fortemente ridatta in caso di non osservazione della piu grande cauzione alla loro manipolazione.
Durante le riparazioni occorre quindi essere collegato allo stesso potenziale che quello della massa dell'apparecchio tramite un braccialetto a resistenza.
Assicurarsi che i componenti e anche gli utensili con quali si lavora siano anche a questo potenziale.

GB

Safety regulations require that the set be restored to its original condition and that parts which are identical with those specified be used.

D

Bei jeder Reparatur sind die geltenden Sicherheitsvorschriften zu beachten.
Der Originalzustand des Gerats darf nicht verandert werden.
Fur Reparaturen sind Original-Ersatzteile zu verwenden.

NL

Veiligheidsbepalingen vereisen, dat het apparaat in zijn oorspronkelijke toestand wordt terug gebracht en dat onderdelen, identiek aan de gespecifieerde worden toegepast.

I

Le norme di sicurezza esigono che l'apparecchio venga rimesso nelle condizioni originali e che siano utilizzati pezzi di ricambiago idetici a quelli specificati.

"Pour votre sécurité, ces documents doivent être utilisés par des spécialistes agrées, seuls habilités à réparer votre appareil en panne."

F

Les normes de sécurité exigent que l'appareil soit remis a l'état d'origine et que soient utilisées les pièces de rechange identiques à celles spécifiées.

LASER SAFETY

This unit employs a laser. Only a qualified service person should remove the cover or attempt to service this device, due to possible eye injury.

CLASS 1
LASER PRODUCT

CAUTION-CLASS 1M VISIBLE AND INVISIBLE LASER RADIATION WHEN OPEN. DO NOT DIRECTLY WITH OPTICAL INSTRUMENTS.

VAROITUS-LUOKAN 1M NÄKYVÄÄ JA NÄKYMÄTÖNTÄ LASERSÄTEILYÄ AVATUNA. ÄLÄ KATSO SÄDETTA SUORAAN OPTISILLA LAITTEILLA

VARNING-KLASS 1M SYNLIG OCH OSYNLIG LASERSTÅLNING VID ÖPPNING. BETRAKTA EJ STRÅLEN DIREKT MED OPTISKA INSTRUMENT.

ADVARSEL-KLASSE 1M USYNLIG OG USYNLIG LASERSTRÅLING VED ÅBNING. MÅ IKKE BETRAGTES DIREKTE MED OPTISKE INSTRUMENTER.

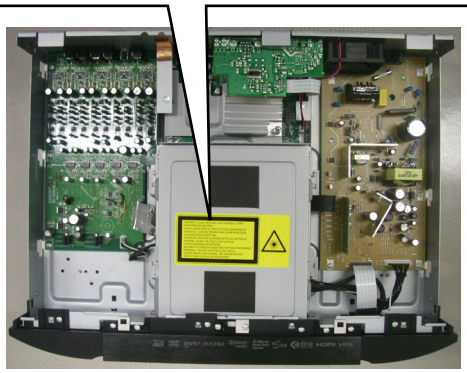

USE OF CONTROLS OR ADJUSTMENTS OR PERFORMANCE OF PROCEDURE OTHER THAN THOSE SPECIFIED HEREIN MAY RESULT IN HAZARDOUS RADIATION EXPOSURE.

AVOID DIRECT EXPOSURE TO BEAM

WARNING

The use of optical instruments with this product will increase eye hazard.
Repair handling should take place as much as possible with a disc loaded inside the player

WARNING LOCATION: INSIDE ON LASER COVERSHIELD

CAUTION VISIBLE AND INVISIBLE LASER RADIATION WHEN OPEN AVOID EXPOSURE TO BEAM
ADVARSEL SYNLIG OG USYNLIG LASERSTRÅLING VED ÅBNING UNDGÅ UDSÆTTELSE FOR STRÅLING
ADVARSEL SYNLIG OG USYNLIG LASERSTRÅLING NÅR DEKSEL Å PNES UNNGÅ EKSPONERING FOR STRÅLEN
VARNING SYNLIG OCH OSYNLIG LASERSTRÅLNING NÄR DENNA DEL ÄR ÖPPNAD BETRAKTA EJ STRÅLEN
VARO! AVATT AESSA OLET ALTTIINA NÄKYVÄLLE JA NÄKYMÄTTÖMÄLLE LASER SÄTEILYLLE. ÄLÄ KATSO SÄTEESEEN
VORSICHT SICHTBARE UND UNSICHTBARE LASERSTRAHLUNG WENN ABDECKUNG GEÖFFNET NICHT DEM STRAHL AUSSETSEN
DANGER VISIBLE AND INVISIBLE LASER RADIATION WHEN OPEN AVOID DIRECT EXPOSURE TO BEAM
ATTENTION RAYONNEMENT LASER VISIBLE ET INVISIBLE EN CAS D'OUVERTURE EXPOSITION DANGEREUSE AU FAISCEAU

100301DM

INSTRUCTIONS FOR HANDLING SEMI-CONDUCTORS AND OPTICAL UNIT

Electrostatic breakdown of the semi-conductors or optical pickup may occur due to a potential difference caused by electrostatic charge during unpacking or repair work.

1. Ground for Human Body

Be sure to wear a grounding band (1 MΩ) that is properly grounded to remove any static electricity that may be charged on the body.

2. Ground for Workbench

Be sure to place a conductive sheet or copper plate with proper grounding (1 MΩ) on the workbench or other surface, where the semi-conductors are to be placed. Because the static electricity charge on clothing will not escape through the body grounding band, be careful to avoid contacting semi-conductors with your clothing

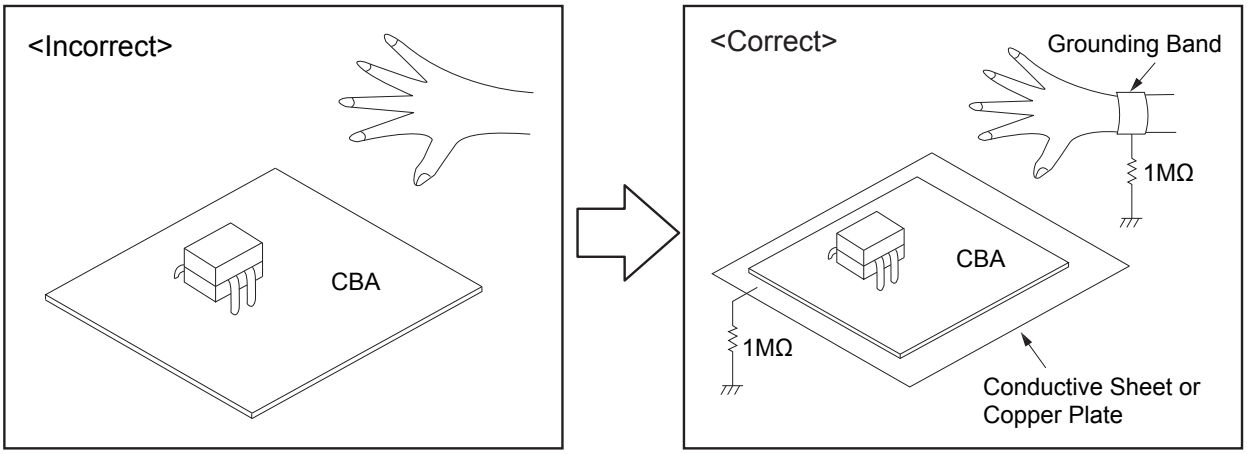

TECHNICAL SPECIFICATIONS

❑ Audio performance

Signal format : NTSC, PAL

Applicable discs /memory device :

(1) BD-Video disc :
12 cm, 1 side, 1 layer; 12 cm, 1 side, 2 layers

(2) DVD-Video / DVD-Audio disc :
12 cm, 1 side, 1 layer; 12 cm, 1 side, 2 layers /
12 cm, 2 sides, 2 layers (1 side, 1 layer)
8 cm, 1 side, 1 layer; 8 cm, 1 side, 2 layers /
8 cm, 2 sides, 2 layers (1 side, 1 layer)

(3) Super Audio CD :
12 cm, 1 layer / 12 cm, 2 layer / 12 cm, Hybrid

(4) Compact Disc (CD-DA) :
12 cm, / 8 cm, disc

(5) Memory device :
USB memory device

Video output :
Output level : 1Vp-p (75 Ω)
Output terminal : Pin-jack, 1 set

Component video output :
Y output level : 1Vp-p (75 Ω)
Pb/Cb output level / Pr/Cr output level : 0.700 Vp-p (75 Ω)
Output terminal : Pin-jack, 1 set

HDMI output :
Output terminal : 19-pin HDMI terminals, 1 set
HDMI ver. 1.4a
(Deep Color, Dolby Digital Plus, Dolby TrueHD, DTS-HD, 3D Ready)

Analog audio output :
Output level : 2 Vrms (10 kΩ)
Mix 2 channels output terminal : Pin-jack, 1 set
7.1 channels output terminal : Pin-jack, 1 set

Audio output characteristics :

(1) Frequency response

① BD (Linear PCM)	: 2Hz ~ 22kHz (48kHz sampling)
	: 2Hz ~ 44kHz (96kHz sampling)
	: 2Hz ~ 88kHz (192kHz sampling)
② DVD (Linear PCM)	: 2Hz ~ 22kHz (48kHz sampling)
	: 2Hz ~ 44kHz (96kHz sampling)
	: 2Hz ~ 88kHz (192kHz sampling)
③ Super Audio CD	: 2Hz ~ 40kHz
④ CD	: 2Hz ~ 20kHz

(2) S/N ratio : 125dB
(3) Total harmonic distortion : 1kHz 0.0008%(BD) Only mix L/R ch
(4) Dynamic range : 110dB(BD)

Digital audio output : Coaxial digital output: Pin-jack, 1 set

❑ General

Power supply : AC 120 V, 60 Hz (for U)
AC 110-240 V, 50 Hz/60 Hz (for N, S)

Power consumption : 39 W

"Power Saving"
- When in Power Saving Standby : 0.3 W
- When in Normal Standby : 0.5 W

Maximum external dimensions : 440 (W) x 109 (H) x 330 (D) mm

Weight : 4.8kg

DIMENSION

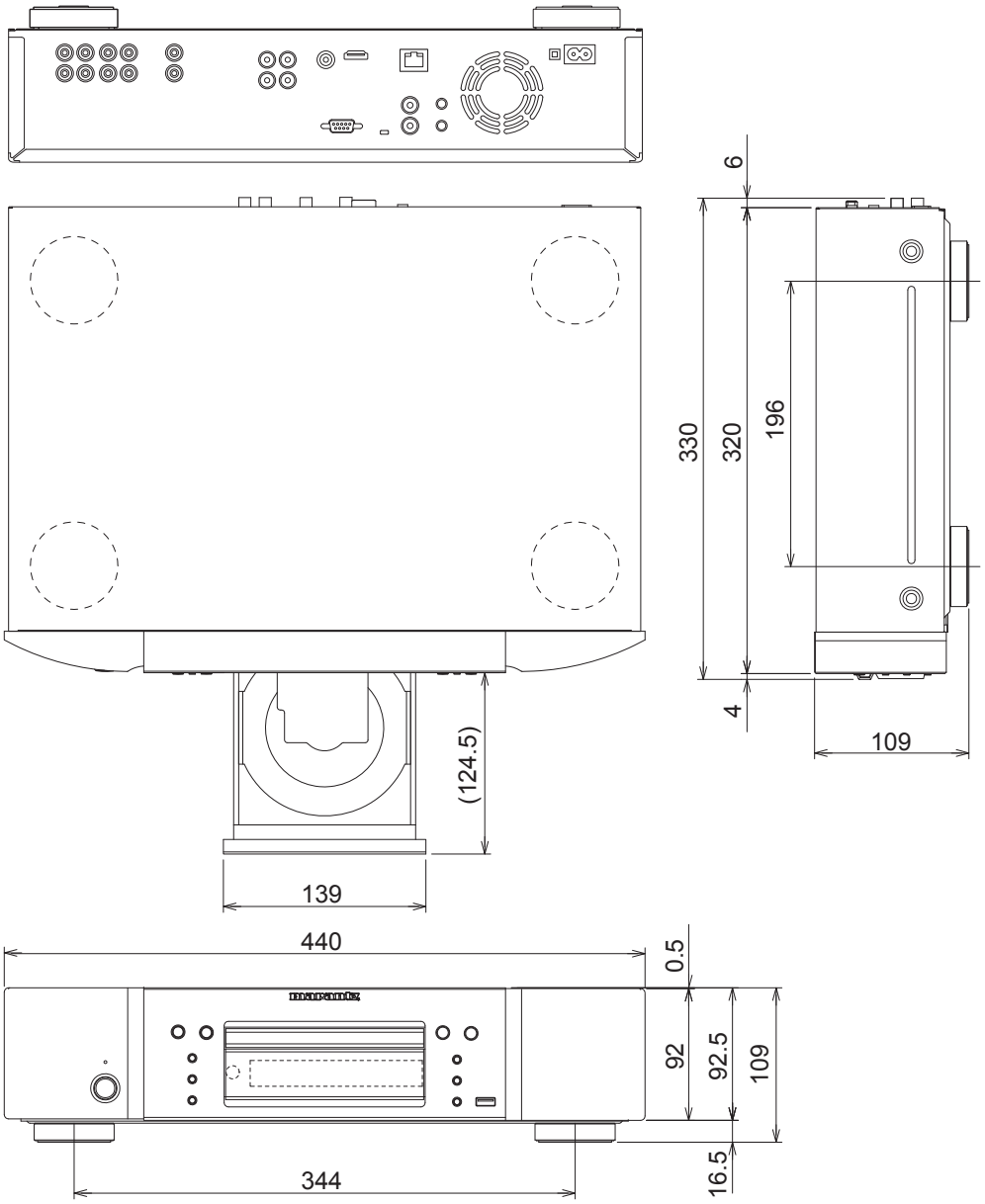

CAUTIONS IN SERVICING

Initializing BD player

BD player initialization should be performed when the µcom, peripheral parts of µcom, and MAIN P.W.B. were replaced.

1. Turn on this model's power. "NO DISC" is displayed on the FL tube.
2. Press the this model's ■ and SOUND MODE buttons simultaneously. "INITIALIZING" is displayed on the FL tube.
3. The display on the FL tube switches to "INITIALIZED", the "NO DISC" display reappears and initialization is completed.

Note: •If step 3 does not work, start over from step 1.
•All user settings will be lost and this factory setting will be recovered after the set is initialized.
So make sure to note down your setting beforehand for restoring after the initialization.

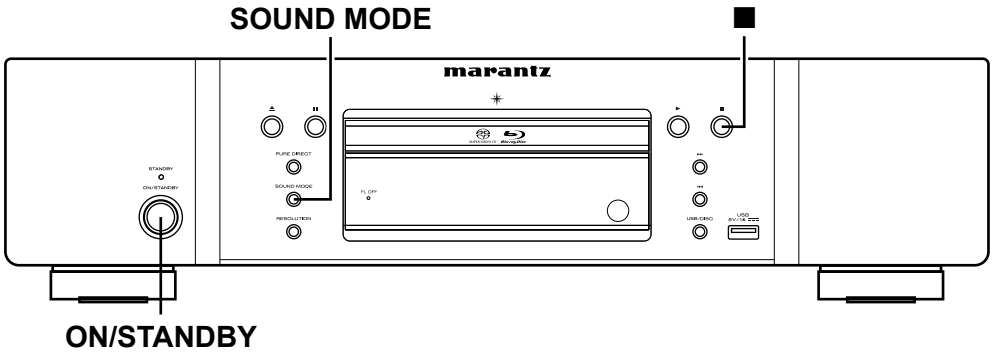

Service tools

Measuring Disc: CD/TCD-784
DVD/VT502 or TDV-520A
BD/ABD-520 or BLX-108

✻ Refer to "MEASURING METHOD AND WAVEFORMS".

When you repair the BD MECHA UNIT, you can use the following JIG.
Please order to marantz Official Service Distributor in your region if necessary.

Do not supply it :	2-Dimensional Bar Code Reader (DS6708 made by Symbol Co. etc.)	: 1 Set
Do not supply it :	232C (TTL) – USB conversion jig (Model: DUT-06635 by GeeeTech):	: 1 Set
Part No. :61205000300AS :	4P RE-PH CONN CORD (1000mm):	: 1 Set

✻ Refer to "HOW TO REPLACE THE MECHA UNIT (TRAVERSE)".

DISASSEMBLY

- Disassemble in order of the arrow of the figure of following figure.
- In the case of the re-assembling, assemble it in order of the reverse of the following flow.
- In the case of the re-assembling, observe "attention of assembling".
- If wire bundles are untied or moved to perform adjustment or replace parts etc., be sure to rearrange them neatly as they were originally bundled or placed afterward.
  Otherwise, incorrect arrangement can be a cause of noise generation.

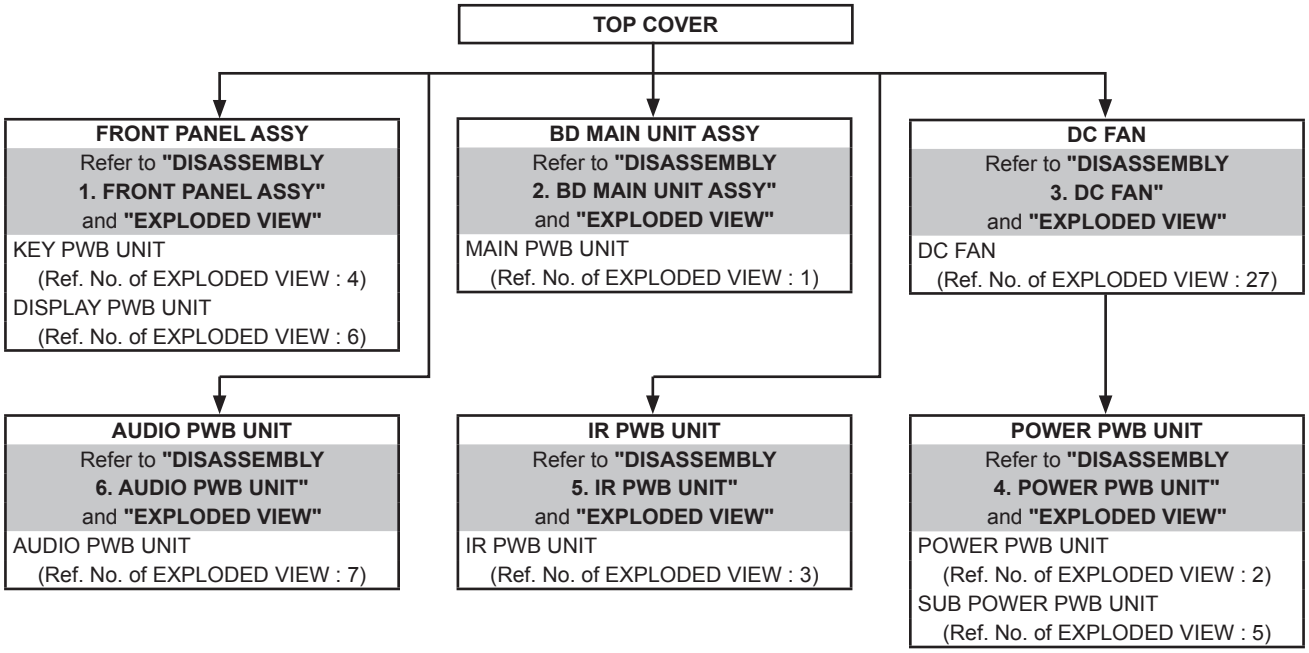

About the photos used for "descriptions of the DISASSEMBLY" section.

- The shooting direction of each photograph used herein is indicated on the left side of the respective photograph as "Shooting direction: ***".
- Refer to the diagram below about the shooting direction of each photograph.
- Photographs with no shooting direction indicated were taken from the top of the set.

The viewpoint of each photograph (Shooting direction)

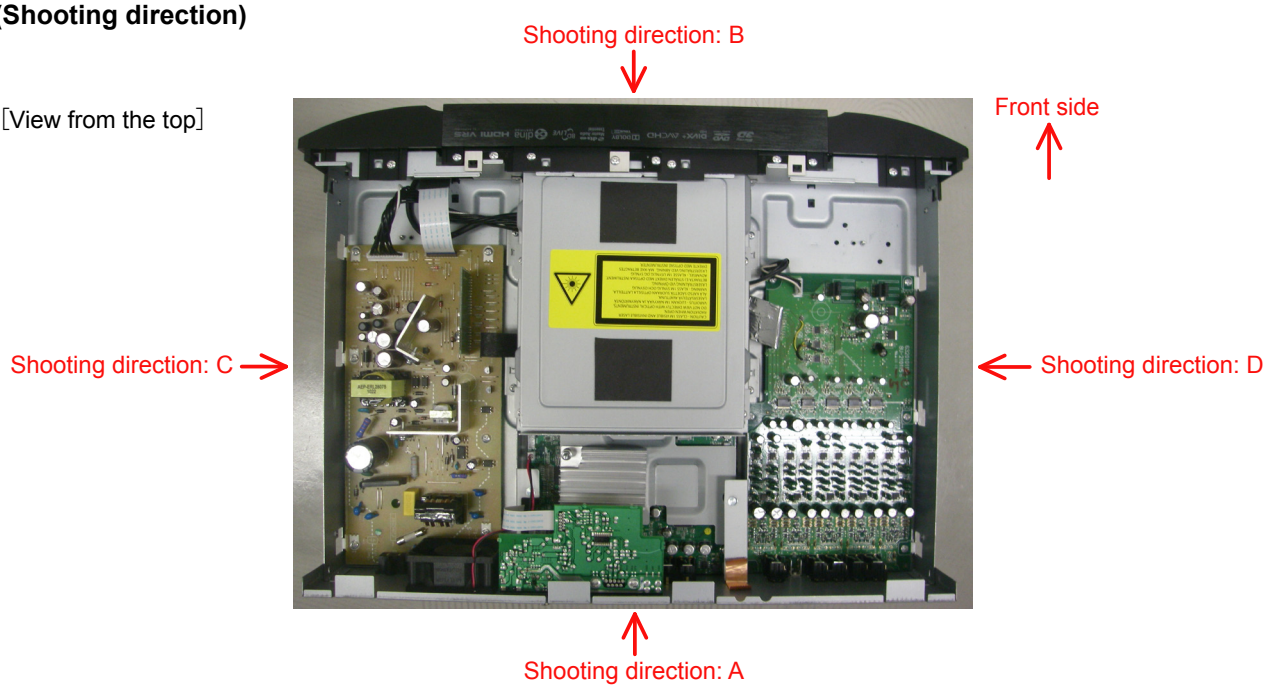

1. FRONT PANEL ASSY

Proceeding : TOP COVER → FRONT PANEL ASSY

(1) Detach the Loader Panel.

Shooting direction: B

(2) Disconnect the FFC cable, then remove the screws.

(3) Lift up to unhook the claws and move in the direction of arrow to gradually pull out the assembly.

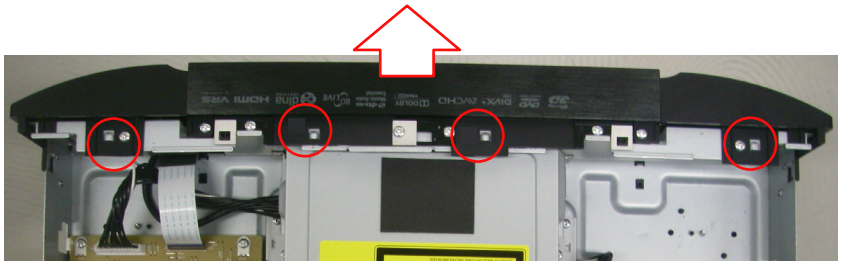

Shooting direction: C

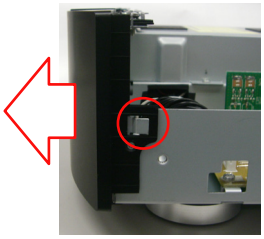

Shooting direction: D

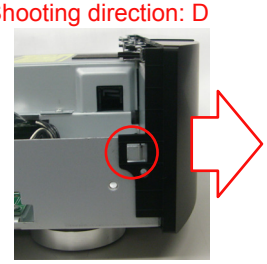

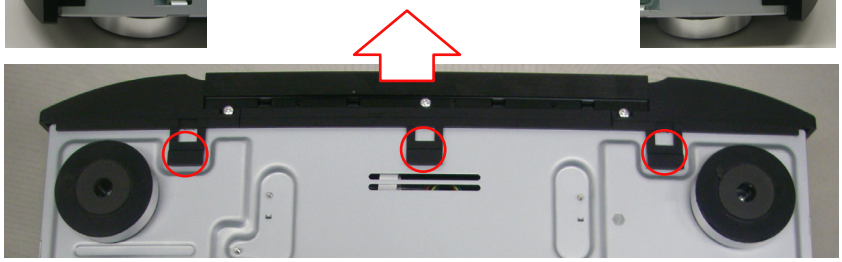

View from the bottom

Please refer to "EXPLODED VIEW" for the disassembly method of each P.W.B included in FRONT PANEL ASSY.

2. BD MAIN UNIT ASSY

Proceeding : TOP COVER → BD MAIN UNIT ASSY

(1) Detach the Loader Panel.

Shooting direction: B

(2) Disconnect the connector wires and FFC cables.

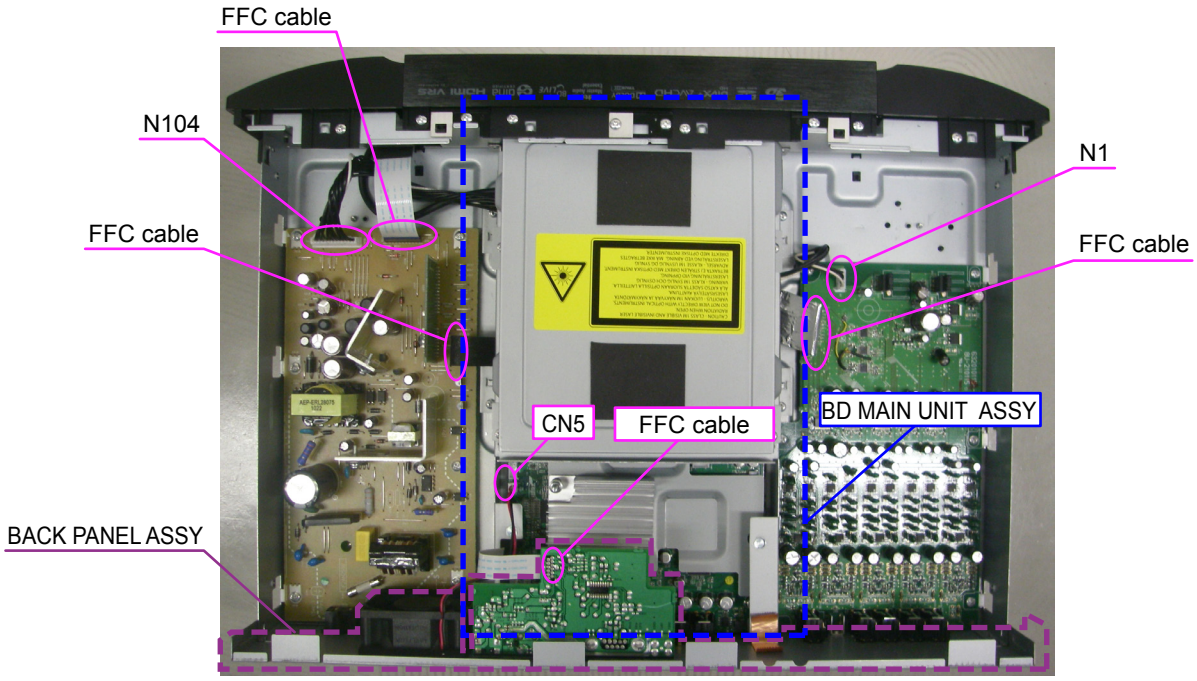

(3) Remove the screws.

Shooting direction: A

View from the bottom

(4) Remove the screws, then remove the BD MAIN UNIT ASSY.

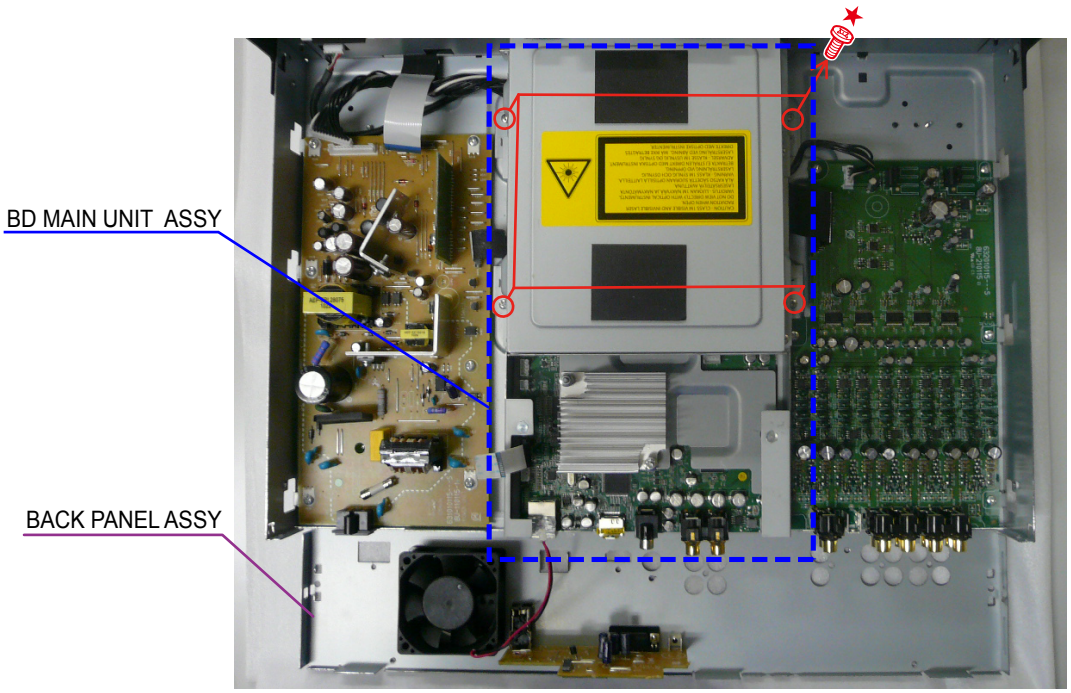

Please refer to "EXPLODED VIEW" for the disassembly method of MAIN PWB included in BD MAIN UNIT.

3. DC FAN

Proceeding : TOP COVER → DC FAN

Please refer to "EXPLODED VIEW" for the disassembly method of CD FAN.

4. POWER PWB UNIT

Proceeding : TOP COVER → DC FAN → POWER PWB UNIT

Please refer to "EXPLODED VIEW" for the disassembly method of POWER PWB UNIT.

5. IR PWB ASSY

Proceeding : TOP COVER → IR PWB UNIT

Please refer to "EXPLODED VIEW" for the disassembly method of IR PWB UNIT.

6. AUDIO PWB ASSY

Proceeding : TOP COVER → AUDIO PWB UNIT

Please refer to "EXPLODED VIEW" for the disassembly method of AUDIO PWB UNIT.

REMOVING DISCS

(1) Remove the Top Cover.

(2) Open the CD tray by turning the Drive gear counterclockwise.

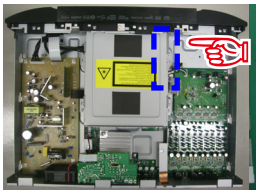

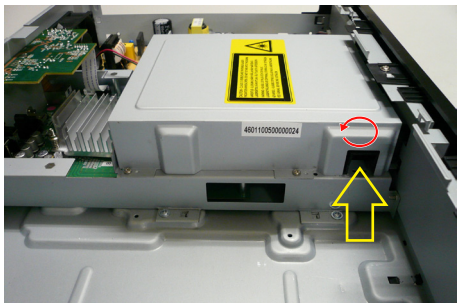

Shooting direction: D

DIAGNOSTICS OF OPTICAL PICKUP ⚠3

Make failure diagnostics of the Optical Pickup as follows.

①If the laser drive current (Iop) becomes more than BD : ± 6 [mA], DVD or CD : ±12 [mA] of the initial value, the Optical Pickup should be replaced.
The laser drive current initial value is checked by "Iop checked Method" of next page.

②Load five times of following disc again and playing it for one minute. It becomes the aim of the Optical Pickup exchange when it cannot play.

BD-RE	ABD-RE540W(made by ALMEDIO)

In case of replacing the Pickup, change the whole part of the BD MAIN UNIT (including the MAIN PWB UNIT) or BD MECHA UNIT ASSY.
No mechanical adjustment is necessary after the replacement. (HOW TO REPLACE THE BD MAIN UNIT OR BD MECHA UNIT ASSY (page 16))

Laser drive current initial value:

CD :

FL Display (The display part of 13 digits)												
1	2	3	4	5	6	7	8	9	10	11	12	13
T	2	1	:	m	m	m	m	:	n	n	n	n

DVD :

FL Display (The display part of 13 digits)												
1	2	3	4	5	6	7	8	9	10	11	12	13
T	2	2	:	m	m	m	m	:	n	n	n	n

BD(SL) :

FL Display (The display part of 13 digits)												
1	2	3	4	5	6	7	8	9	10	11	12	13
T	2	3	:	m	m	m	m	:	n	n	n	n

①Check the laser drive current value

Disc no read, unsteady playback, etc.

↓

Laser drive current (Iop) check.

↓ Current value of the BD Iop is ±6[mA], DVD or CD Iop is ±12[mA] or more the initial value.

The BD MAIN UNIT
or the BD MECHA UNIT ASSY replacing.

②Check the playability disc

Disc no read, unsteady playback, etc.

↓

ABD-RE540W disc playability check.
(Load five times of following disc)

↓ Disc cannot play.

The BD MAIN UNIT
or the BD MECHA UNIT ASSY replacing.

1. Iop checked Method

Select the Laser on/off(CD/DVD/BD)mode of the test mode, and check the IOP value of CD laser, DVD laser or BD laser. (Refer to "6. Test mode")

FL Display (The display part of 13 digits)												
1	2	3	4	5	6	7	8	9	10	11	12	13
T	2		L	a	s	e	r	O	n	O	f	f

Laser current check

Press the ⏮ or ⏭ button to display the laser current value, and then select [X].
Check the current value of Iop (nnnn)

FL Display (The display part of 13 digits)												
1	2	3	4	5	6	7	8	9	10	11	12	13
T	2	X	:	m	m	m	m	:	n	n	n	n

(X=1 : CD laser mode, 2 : DVD laser mode, 3 : BD(SL) laser mode
(mmmm[mA] : Initial value, nnnn[mA] : Current value)

2. To clear the accumulated laser on time

Press the ▶ button while the accumulated laser on time is displayed ("TC1, "TC2", "TC3") until "TC4 ＊ clear??" appears at the display. If the ▶ button is pressed, the accumulated laser on time of CD, DVD and BD is cleared

FL Display (The display part of 13 digits)												
1	2	3	4	5	6	7	8	9	10	11	12	13
T	C	4	*	-	-	c	l	e	a	r	?	?

When "TC1", "TC2" or "TC3" is selected with the ⏮ or ⏭ button, "mmmmmm" is displayed as "0" so you can check.

FL Display (The display part of 13 digits)												
1	2	3	4	5	6	7	8	9	10	11	12	13
T	C	Y	-	-	-	m	m	m	m	m	m	h

(Y=1 : CD, 2 : DVD , 3 : BD, mmmmmm : Time)

HOW TO REPLACE THE BD MAIN UNIT OR BD MECHA UNIT ASSY

NOTE: The light pick-up laser diode (LD) is instantly degraded or damaged by static electricity or a power surge. When handling the BD MECHA UNIT, always be sure to earth yourself, and use an earth mat on the workbench and floor for grounding.

- **BD MECHA UNIT Replacement Conditions**

If the laser amperage (Iop) exceeds the stipulated range (see the laser on/off mode in test mode (page 26)), replace the BD MECHA UNIT ASSY or replace the BD MAIN UNIT (including the MAIN PWB UNIT). If other problems occur, replace the BD MAIN UNIT (including the MAIN PWB UNIT).

Stipulated range: For BD, within ±6 [mA] of the initial value; for DVD/CD, within ±12 [mA] of the initial value.

- **The following two parts are specified as service parts for the MECHA UNIT.**

1. BD MAIN UNIT(UD7006) (including the MAIN PWB UNIT) : (Part No. : 972304000530S)
2. BD MECHA UNIT ASSY : (Part No. : 963309100060S)

1. How to Replace the BD MAIN UNIT (including the MAIN PWB UNIT)

(1) Refer to the removal procedure, and remove and replace the BD MAIN UNIT(UD7006). (see "DISASSEMBLY")
(2) Follow the firmware update procedure, and update the firmware to the latest version.
(see "VERSION UPGRADE PROCEDURE OF FIRMWARE")

2. How to Replace the BD MECHA UNIT ASSY

2.1. Devices Used

1. PC
2. 2-Dimensional Bar Code Reader (DS6708 made by Symbol Co. etc.) (Do not supply)
3. USB - 232C (TTL) conversion jig (Model: DUT-06635 by GeeeTech) (Do not supply)
4. 4P RE-PH CONN CORD (1000mm) (Part No. : 61205000300AS)
5. Write software (D&M ScanBarcode Rpower 2.16.60(KES460)_MP function.zip)

2.2. BD MECHA UNIT ASSY Replacement Overview

(1) Before replacing the BD MECHA UNIT ASSY, write all of the BD MECHA UNIT ASSY data of the unit to be replaced onto the set.
(2) After performing (1), replace the BD MECHA UNIT ASSY.
(3) Configure the settings for the set in which the BD MECHA UNIT ASSY was replaced.

2.3. Before replacing the BD MECHA UNIT ASSY

[Preparation]

1. Set unit before replacing the BD MECHA UNIT ASSY
2. PC with write software (D&M ScanBarcode Rpower 2.16.60(KES460)_MP function.zip) installed
3. 2-Dimensional Bar Code Reader
4. USB - 232C (TTL) conversion jig
5. BD MECHA UNIT ASSY for replacement

NOTE : Be sure not to mistake the light pick-up bar code data settings with data from a different pick-up. Writing incorrect data will cause laser degradation.

[Connection]

(1) Connect the PC and bar code reader.

(2) Connect the 232C (TTL) side 4P PH connector of the USB - 232C (TTL) conversion jig to the MAIN PWB UNIT (CN601) of the set.

(3) Connect the USB side of the USB - 232C (TTL) conversion jig to the PC.

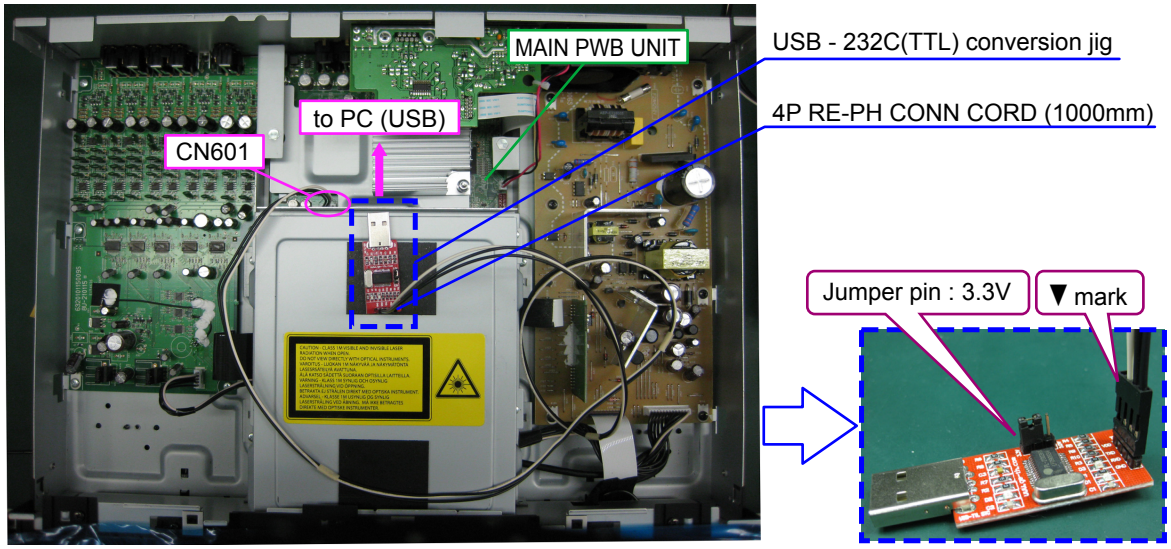

[Writing new light pick-up data]

• Barcode position of light pick-up unit

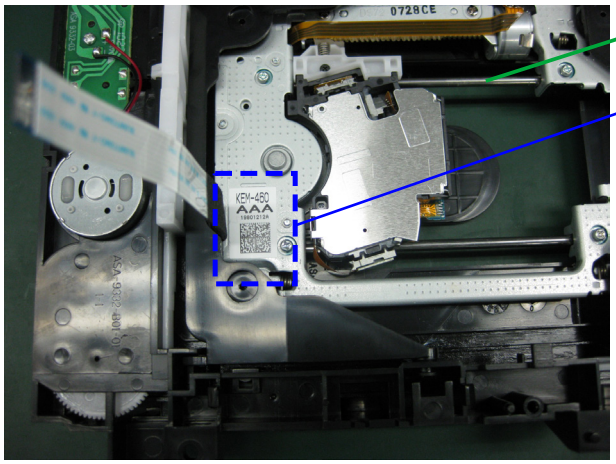

(1) Switch on the power on of the set before the BD MECHA UNIT ASSY is replaced.

(2) Decompress the D&M ScanBarcode Rpower 2.16.60(KES460) _ MP function.zip folder and start the "Rpower.exe".

(3) A pop-up is displayed. Click "OK".

(4) Click "OK".

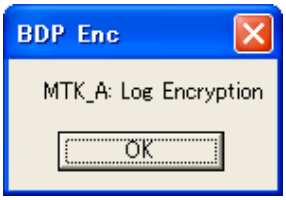

(5) On the screen below, select "ComPort XX".
Select the USB - 232C (TTL) conversion jig port.

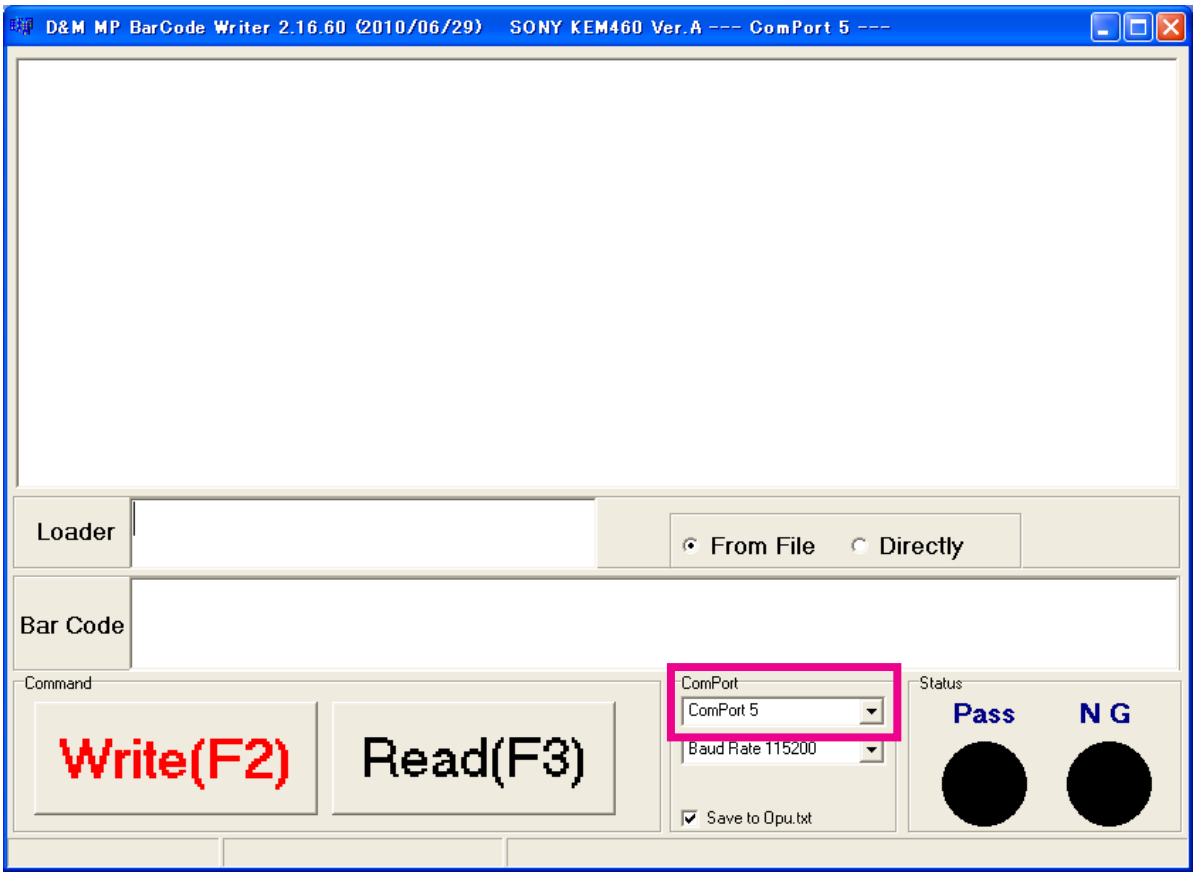

(6) Check "Directly".

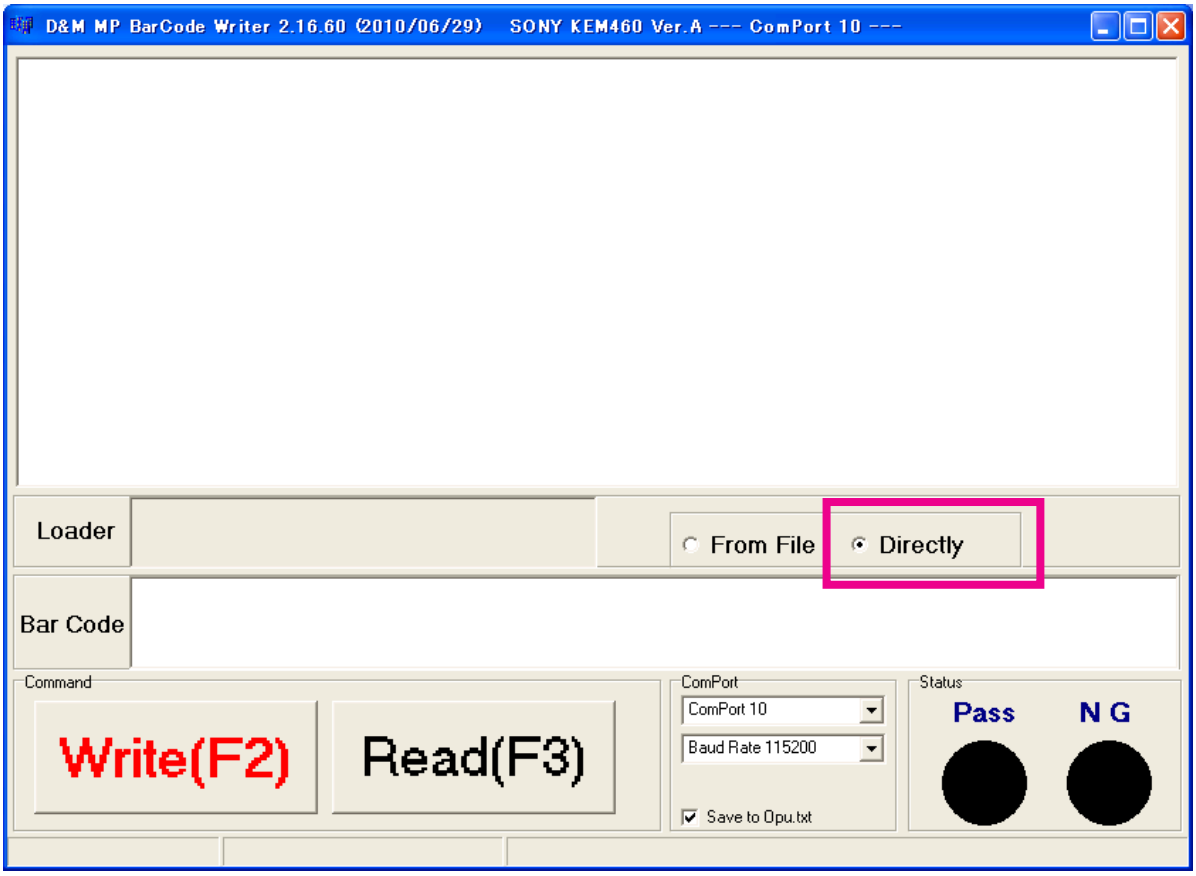

(7) Click the left edge of the "Bar Code" window, and the cursor begins to flash.

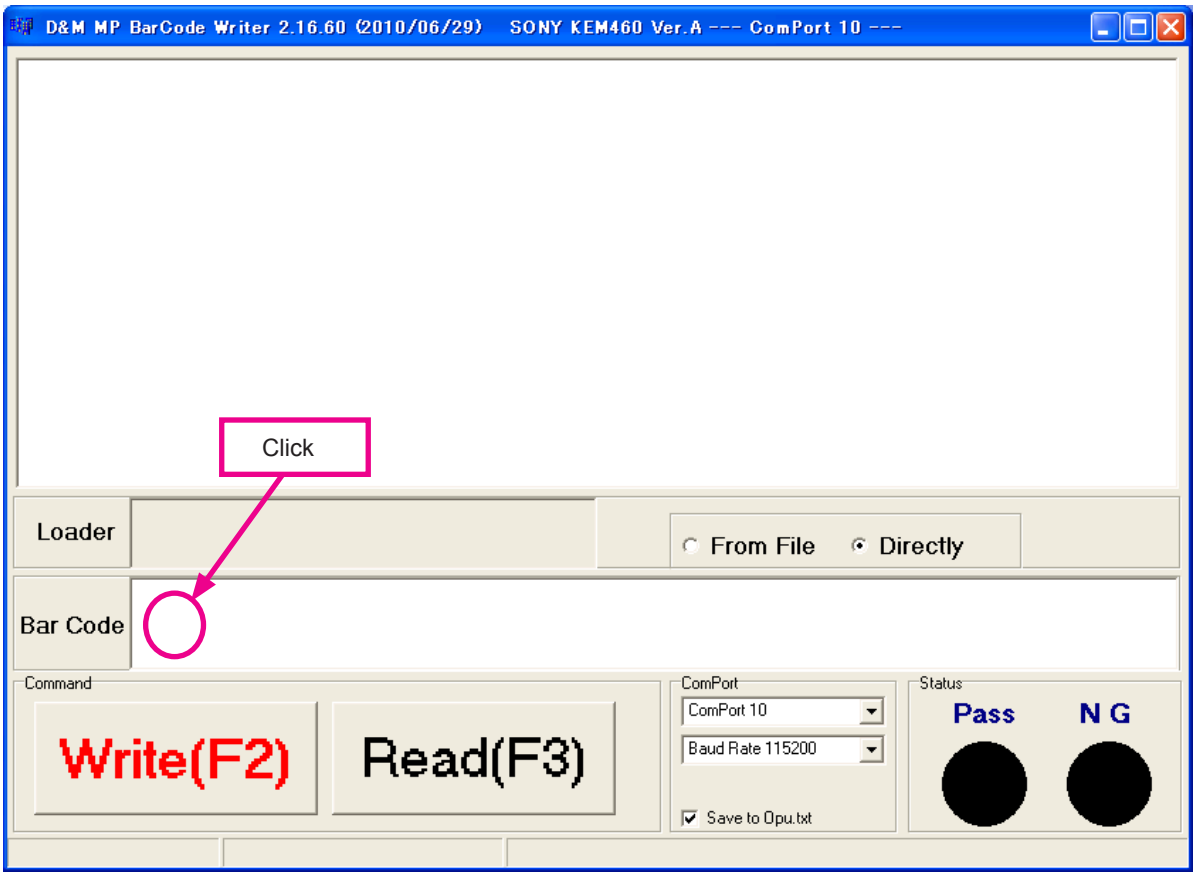

(8) Place the bar code reader over the bar code attached to the replacement BD MECHA UNIT ASSY.
When the reader has finished reading the barcode, the read data is displayed.

※ If the 2-dimensional barcode data has already been read by the 2-dimensional barcode reader, and the converted data obtained, copy the data from the data file, and paste it into this section.

NOTE : Be sure not to mistake the light pick-up bar code data settings with data from a different pick-up. Writing incorrect data will cause laser degradation.

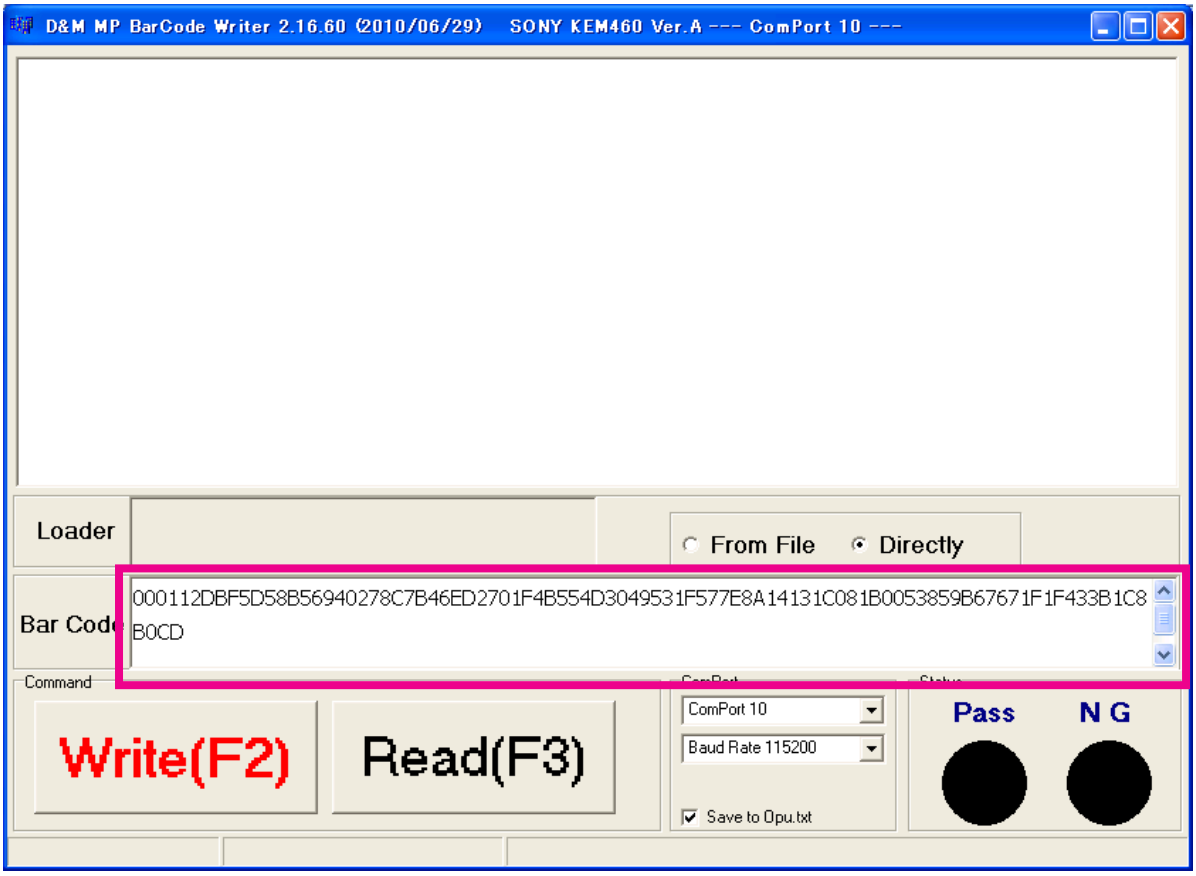

(9) Click Write(F2).

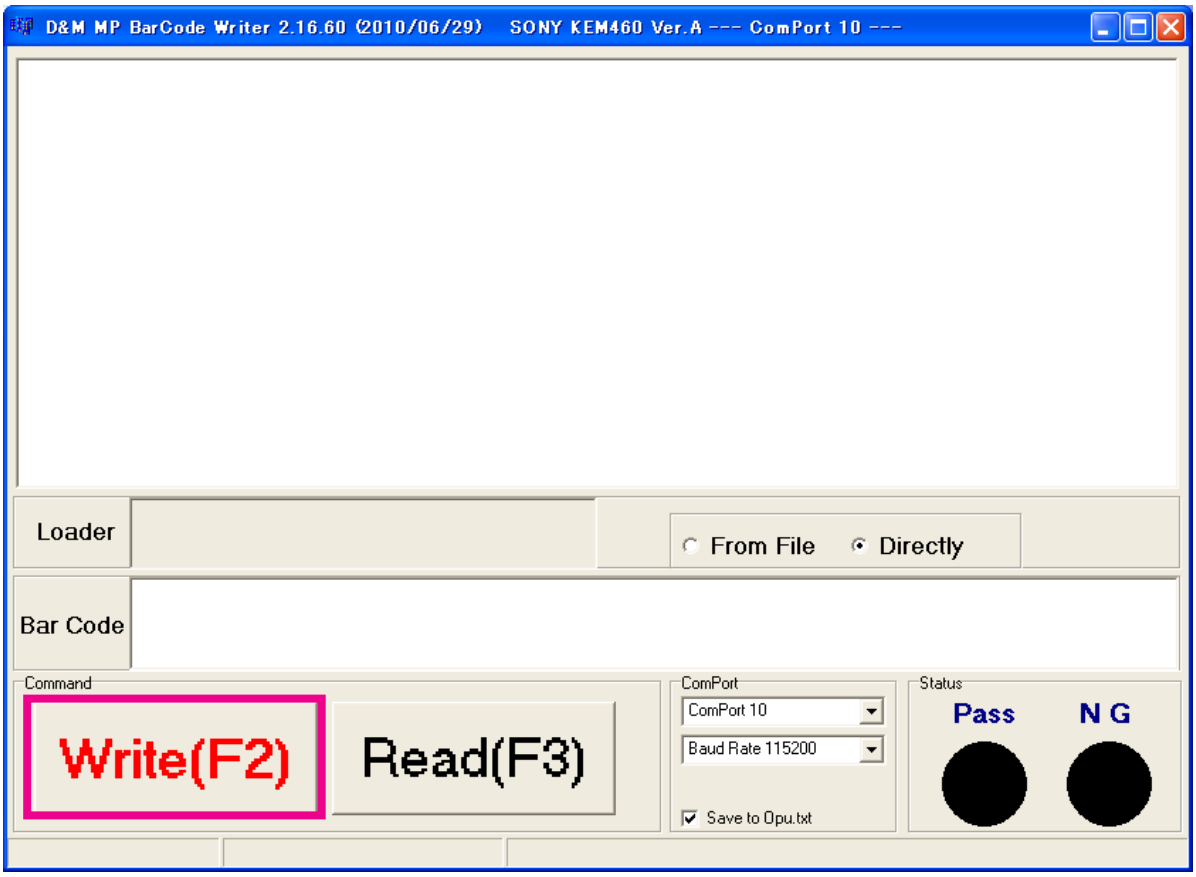

(10) When “Pass” changes to green, writing to the Flash ROM of the MAIN PWB UNIT is complete.

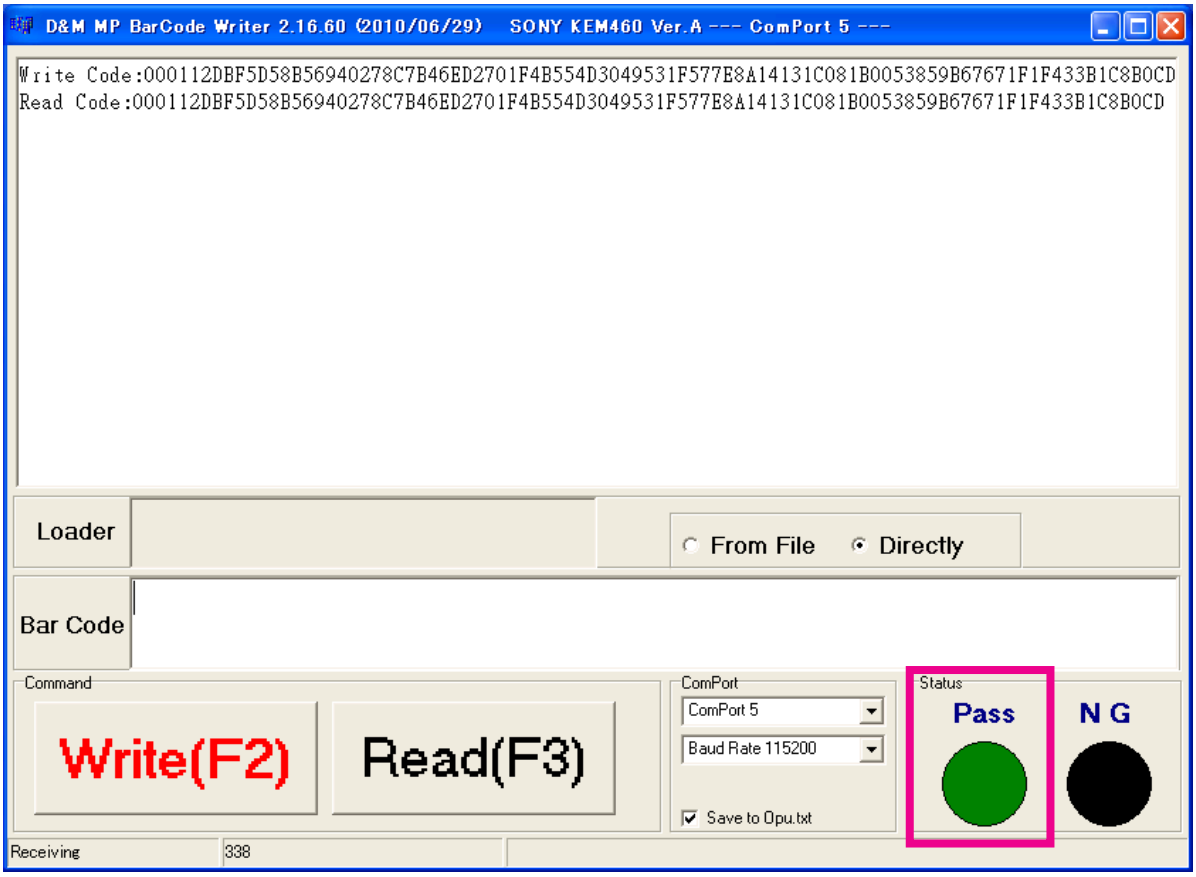

(11) Switch off the set unit power, and remove the 232C (TTL) side 4P PH connector of the USB - 232C (TTL) conversion jig from the MAIN PWB UNIT (CN601).

2.4. Replace the BD MECHA UNIT ASSY

(1) Remove the old BD MAIN UNIT from the set unit (see "DISASSEMBLY").

(2) Remove the MECHA COVER.

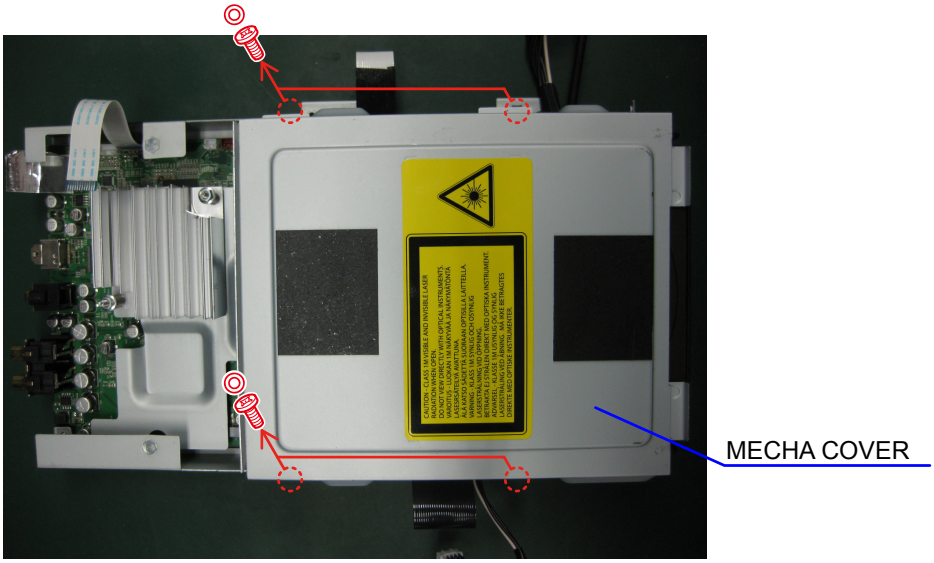

(3) Cut wire clamp band, then disconnect the connector wire and FFC cable.

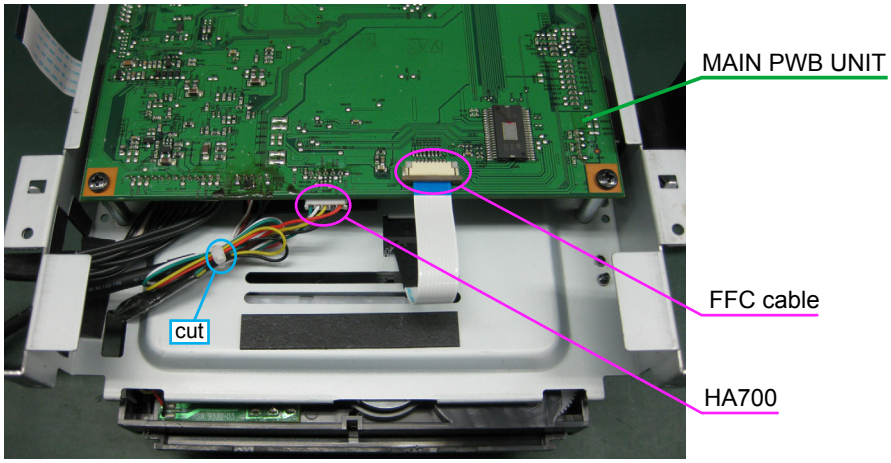

(4) Move the optical pickup to the outer circumference, remove the FFC Cable, and remove the screws.

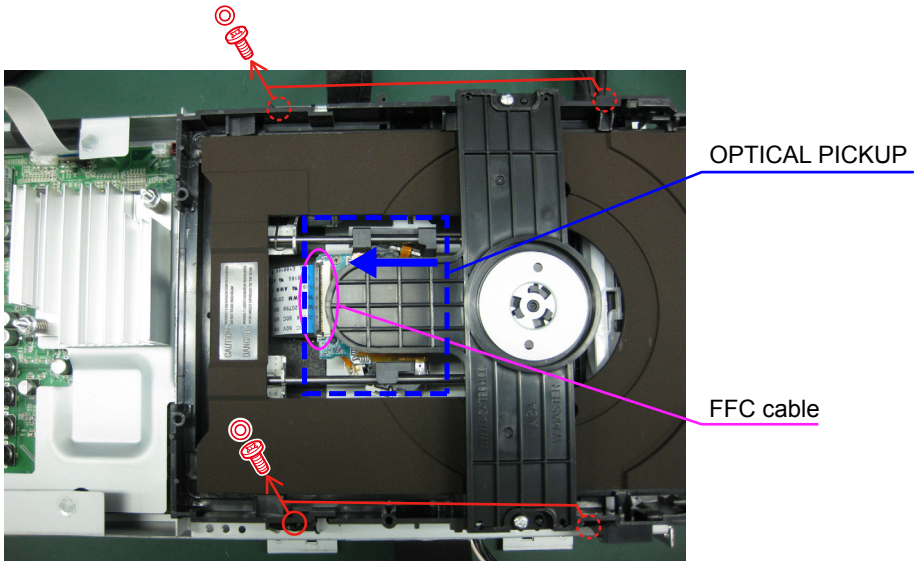

(5) Attach the BD MECHA UNIT ASSY for replacement to the set unit. (When assembling the unit, perform the steps in reverse order.)

(6) Check that the 45P-FFC, 9P-FFC and 5P-PH connector cords have been connected.

2.4. Configure the settings of the set that contains the new BD MECHA UNIT

(1) Check the laser amperage (see laser on/off mode in the test mode (page 26)).
Check that the values are ±6 [mA] from the initial value for BD, and ±12 [mA] from the initial value for DVD/CD.

(2) Clear the total laser usage time (see the procedure for clearing the accumulated laser on time in test mode (page 27)).

(3) Check BD, DVD, and CD media playback.

(4) If there are no problems with playback, remove the disc, press the ON/STANDBY button to switch to standby status, and remove the AC plug from the AC socket.

(5) Attach the top cover, and this completes the replacement procedure.

SERVICE MODE

1. Initial setting mode

1.1. preparation

(1) Equipment used: None

(2) Unit setting: No spec other than the following procedure.

1.2. procedure

※ Initialize the BD player when µcom, peripheral parts of µcom, or MAIN P.W.B. unit has been replaced in servicing.

※ All user setting will be lost and its factory setting will be restored when this initialization is made. Be sure to memorize your setting for restoring again after the initialization.

(1) Turn on this model's power. "NO DISC" is displayed on the fluorescent tube.

(2) Press the this model's ■ and SOUND MODE buttons simultaneously. "INITIALIZING" is displayed on the fluorescent tube.

(3) The display on the fluorescent tube switches to "INITIALIZED", the "NO DISC" display reappears and initialization is completed.

2. Firmware version check mode

2.1. preparation

(1) Equipment used: None

(2) Unit setting: No spec other than the following procedure.

2.2. procedure

※ Front-end and Back-end and SYS com version check mode.

(1) Press the SETUP button on the remote controller to display the SETUP menu.

(2) Press remote controller "3265".

(3) The version is displayed on the TV screen as follows.

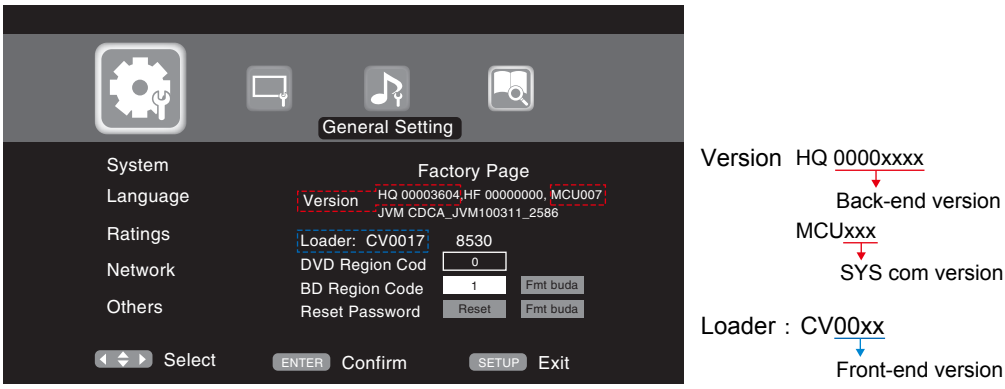

3. Tray lock mode ⚠6

3.1. preparation

(1) Equipment used: None

(2) Unit setting: No spec other than the following procedure.

3.2. procedure

[Setting]

(1) Pressing the ▶ and ⏮ buttons for simultaneously, plug the AC cord into a power outlet.

(2) "TRAY LOCK" is displayed on the FL tube and tray opening/closing is invalidated.

[Cancel]

(1) Unplug this model's AC cord from the power outlet.

(2) Pressing the ▶ and ⏮ buttons for simultaneously, plug the AC cord into a power outlet.

(3) "PLEASE WAIT" is displayed on the FL tube and tray opening/closing is enabled.

※ The tray lock mode is also canceled when the product is initialized.

4. Remote lock mode

4.1. preparation

(1) Equipment used: None

(2) Unit setting: No spec other than the following procedure.

4.2. procedure

[Setting]

(1) Pressing the PURE DIRECT and ⏸ buttons for simultaneously.

(2) “Lock-On” is displayed on the FL tube, and operations with the remote control and the REMOTE CONTROL input terminal on the back of the UD7006 are disabled.

[Cancel]

(1) Pressing the PURE DIRECT and ⏸ buttons for simultaneously.

(2) "Lock-Off" is displayed on the fluorescent tube and remote lock mode is made canceled.

5. All Lit / All Off mode for the FL tube

5.1. preparation

(1) Equipment used: None

(2) Unit setting: No spec other than the following procedure.

5.2. procedure

[Setting]

(1) Pressing the USB/DISC and ▶ buttons for simultaneously, plug the AC cord into a power outlet.
If All Lit / All Off mode is set for the FL tube, the FL tube’s display area is fully lit.

(2) Press the PURE DIRECT button to switch between ‘all lit’ and ‘all off’ display.

[Cancel]

(1) Remove the power cable for 5 seconds or more to cancel All Lit / All Off mode for the FL tube.

6. Test mode ⚠4

6.1. Entering the test mode

The test mode is entered by pressing the ⏏ and ❚❚ buttons simultaneously, plug the AC cord into a power outlet. When the test mode is set, the "►" and "❚❚" indicators light.

FL tube display when test mode entered

FL Display (The display part of 13 digits)												
1	2	3	4	5	6	7	8	9	10	11	12	13
		T	E	S	T		M	O	D	E		

When the test mode is set, the choice screen of the mode appears on the monitor.

6.2. Selecting the mode

・The following modes are available.

(1) Laser on/off (CD/DVD/BD) mode : T2
(2) Error rate (skew) measurement mode : T7
(3) Accumulated laser on time display mode : TC
(4) Picking up No. display mode : TG
(5) OPU Change mode : Please do not use this mode.
In the case of OPU change, please cope according to an exchange method of "2. How to Replace the BD MECHA UNIT ASSY" (page 16).
※When choose OPU change mode and press the ► button, press the ■ button, and please cancel a mode.
(6) Test mode cancel : TI

① When the ►►I button is pressed after entering the test mode, the display switches in the order: "T2, T7, TC, TG, TI, T2 …"

FL Display (The display part of 13 digits)												
1	2	3	4	5	6	7	8	9	10	11	12	13
T	2		L	a	s	e	r	O	n	O	f	f

FL Display (The display part of 13 digits)												
1	2	3	4	5	6	7	8	9	10	11	12	13
T	7		E	r	r	o	r		R	a	t	e

FL Display (The display part of 13 digits)												
1	2	3	4	5	6	7	8	9	10	11	12	13
T	C		L	a	s	e	r	O	n	T	i	m

FL Display (The display part of 13 digits)												
1	2	3	4	5	6	7	8	9	10	11	12	13
T	G		O	P	U		N	u	m	b	e	r

FL Display (The display part of 13 digits)												
1	2	3	4	5	6	7	8	9	10	11	12	13
		O	P	U		C	h	a	n	g	e	

FL Display (The display part of 13 digits)												
1	2	3	4	5	6	7	8	9	10	11	12	13
T	I		T	e	s	t		E	x	i	t	

② When the I◄◄ button is pressed, the display switches in the opposite order from ① above, starting from the current position (for example, if currently at "TC", it switches as follows: "T7, T2 ").

6.3. About each mode

・With the mode selected, press the ▶ button to set that mode.

(1) Laser on/off (CD/DVD/BD) mode

Press the ⏮ or ⏭ button to select [X] and press the ▶ button to set it.
Laser on/off control is executed and the laser current is displayed.

FL Display (The display part of 13 digits)												
1	2	3	4	5	6	7	8	9	10	11	12	13
T	2	X	:	m	m	m	m	:	n	n	n	n

(X=1 : CD laser mode, 2 : DVD laser mode, 3 : BD(SL) laser mode)
(mmmm[mA] : Stored data, nnnn[mA] : Current value)

※ When the current value is more that BD: ±6[mA], DVD or CD: ± 12[mA] of saved data, it becomes the pickup transducer's target.
In this case, replace the mechanism unit.

When the ■ button is pressed, the layer above the current layer is displayed. See "6.4 Stopping the mode".

(2) Error rate measurement mode

Press the ⏮ or ⏭ button to select [YY] .
Refer to [Table 1 - Error rate details].

FL Display (The display part of 13 digits)												
1	2	3	4	5	6	7	8	9	10	11	12	13
T	Y	Y	F	F	F	F	F	F	F	F	F	F

(YY : measurement mode, F : Address and error rate (When not set, "F" is displayed.))

Press the ▶ button to begin error rate measurement. The address and error rate are displayed.
For a description of the displayed measurement results, see "Table 1: Error rate details".

FL Display (The display part of 13 digits)												
1	2	3	4	5	6	7	8	9	10	11	12	13
T	Y	Y	m	m	m	m	m	m	l	l	l	l

(YY : selection mode [71 to 94], m : address [PBA][HEX], l : error rate [COUNT/SEC] [DEC])

(Note) CD (4x-speed) : Renewal of data is carried out for every 300 frame.
Error rate of 75 frames is displayed.
DVD (1.6x-speed) : Renewal of data is carried out for every 80ECC block.
Error rate of 8ECC block is displayed.
BD (1.6x-speed) : Renewal of data is carried out for every 136LDC clusters block.
Error rate of 8LDC clusters block is displayed.

The mode chosen when selection mode was changed into the trace execution and the ▶ button was pressed is performed from the beginning.
When the ▶ button is pressed without changing selection mode, the mode under selection is performed from the beginning.
(If the ▶ button is pressed, the address corresponding to the chosen mode will be searched again.)

The pause mode is set after tracing is completed.

When the ■ button is pressed, the layer above the current layer is displayed. See "6.4 Stopping the mode".

(3) Accumulated laser on time display mode

Press the ⏮ or ⏭ button to select [Y] and press the ▶ button to set it.
The accumulated laser on time is displayed.

FL Display (The display part of 13 digits)												
1	2	3	4	5	6	7	8	9	10	11	12	13
T	C	Y				m	m	m	m	m	m	h

(Y=1 : CD, 2 : DVD , 3 : BD, mmmmmm : Time(Fractions of hours are counted up one hour on the display.))

When the ■ button is pressed, the layer above the current layer is displayed. See "6.4 Stopping the mode".

---To clear the accumulated laser on time---

Press the ▶ button while the accumulated laser on time is displayed ("TC1, "TC2", "TC3") until "TC4 ∗ clear??" appears at the display.

FL Display (The display part of 13 digits)												
1	2	3	4	5	6	7	8	9	10	11	12	13
T	C	4	*			c	l	e	a	r	?	?

If the ▶ button is pressed, the accumulated laser on time of CD, DVD and BD is cleared.

FL Display (The display part of 13 digits)												
1	2	3	4	5	6	7	8	9	10	11	12	13
T	C	1									0	h

When "TC1", "TC2" or "TC3" is selected with the ⏮ or ⏭ button, "mmmmmm" is displayed as "0" so you can check.

(4) Picking up No. display mode

Press the ⏮ or ⏭ button to switch to the pickup number display.
The pickup number is a 15-digit number, so it is displayed in two sections.

FL Display (The display part of 13 digits)												
1	2	3	4	5	6	7	8	9	10	11	12	13
T	G	X		Y	Y	Y	Y	Y	Y	Y	Y	

(X (display position) = 1 : Lower digits, 2 : Upper digits. YYYYYYYY: Pickup number)

When the ■ button is pressed, the layer above the current layer is displayed. See "6.4 Stopping the mode".

(5) Test mode cancel

A confirmation message is displayed. Press the ▶ button to set, canceling the test mode.

FL Display (The display part of 13 digits)												
1	2	3	4	5	6	7	8	9	10	11	12	13
T	I	1		R	e	a	l	l	y	?		

When the ■ button is pressed, the layer above the current layer is displayed. See "6.4 Stopping the mode".

6.4. Stopping the mode

When the ■ button is pressed, the layer above the current layer is displayed. The relationship between the different modes and the display of the different layers is shown on the table below.

Mode	1 layer	2 layer	3 layer
Laser on/off (CD/DVD/BD) mode	T2 LaserOnOff	T2X mmmm nnnn	Non
Error rate measurement mode	T7 Error Rate	TYYFFFFFFFFFF	TYYmmmmmmlllll
Accumulated laser on time display mode	TC LaserOnTim	TCY mmmmmmh	TC4* clear??
Picking up No. display mode	TG OPU Number	TGX YYYYYYY	Non
Test mode cancel	TI Test Exit	TI1 Really?	Non

6.5. About the OPEN/CLOSE (⏏)button

Even during the test mode, the tray is opened and closed when the ⏏ button is pressed.

6.6. Test mode detailed table

Table 1: Error rate details

YY	Measurement position	Error rate display details for each media type			Remarks
		BD	DVD	CD	
71	The inner circumference of 1-layer	BIS error detection signed number	It is invalid.	It is invalid.	When this is selected for DVD or CD, T71 FFFFFFFFFF display.
72	The inner circumference of 1-layer	It is invalid.	It is invalid.	It is invalid.	When this is selected for BD, DVD or CD, T72 FFFFFFFFFF display.
73	The inner circumference of 1-layer	LDC error detection signed number	PI error detection number	C1 error detection number	
74	The inner circumference of 1-layer	It is invalid.	It is invalid.	C2 uncorrectable error number	When this is selected for BD or DVD, T74 FFFFFFFFFF display.
75	The central circumference of 1-layer	BIS error detection signed number	It is invalid.	It is invalid.	When this is selected for DVD or CD, T75 FFFFFFFFFF display.
76	The central circumference of 1-layer	It is invalid.	It is invalid.	It is invalid.	When this is selected for BD, DVD or CD, T76 FFFFFFFFFF display.
77	The central circumference of 1-layer	LDC error detection signed number	PI error detection number	C1 error detection number	
78	The central circumference of 1-layer	It is invalid.	It is invalid.	C2 uncorrectable error number	When this is selected for BD or DVD, T78 FFFFFFFFFF display.
79	The outer circumference of 1-layer	BIS error detection signed number	It is invalid.	It is invalid.	When this is selected for DVD or CD, T79 FFFFFFFFFF display.
80	The outer circumference of 1-layer	It is invalid.	It is invalid.	It is invalid.	When this is selected for BD, DVD or CD, T80 FFFFFFFFFF display.
81	The outer circumference of 1-layer	LDC error detection signed number	PI error detection number	C1 error detection number	
82	The outer circumference of 1-layer	It is invalid.	It is invalid.	C2 uncorrectable error number	When this is selected for BD or DVD, T82 FFFFFFFFFF display.
83	The inner circumference of 2-layer	BIS error detection signed number	It is invalid.	It is invalid.	When this is selected for DVD or CD, T83 FFFFFFFFFF display.

YY	Measurement position	Error rate display details for each media type			Remarks
		BD	DVD	CD	
84	The inner circumference of 2-layer	It is invalid.	It is invalid.	It is invalid.	When this is selected for BD, DVD or CD, T84 FFFFFFFFFF display.
85	The inner circumference of 2-layer	LDC error detection signed number	PI error detection number	It is invalid.	When this is selected for 1-layer DVD or CD, T85 FFFFFFFFFF display.
86	The inner circumference of 2-layer	It is invalid.	It is invalid.	It is invalid.	When this is selected for BD, DVD or CD, T86 FFFFFFFFFF display.
87	The central circumference of 2-layer	BIS error detection signed number	It is invalid.	It is invalid.	When this is selected for DVD or CD, T87 FFFFFFFFFF display.
88	The central circumference of 2-layer	It is invalid.	It is invalid.	It is invalid.	When this is selected for BD, DVD or CD, T88 FFFFFFFFFF display.
89	The central circumference of 2-layer	LDC error detection signed number	PI error detection number	It is invalid.	When this is selected for DVD 1-layer or CD, T89 FFFFFFFFFF display.
90	The central circumference of 2-layer	It is invalid.	It is invalid.	It is invalid.	When this is selected for BD, DVD or CD, T90 FFFFFFFFFF display.
91	The outer circumference of 1-layer	BIS error detection signed number	It is invalid.	It is invalid.	When this is selected for DVD or CD, T91 FFFFFFFFFF display.
92	The outer circumference of 1-layer	It is invalid.	It is invalid.	It is invalid.	When this is selected for BD, DVD or CD, T92 FFFFFFFFFF display.
93	The outer circumference of 1-layer	LDC error detection signed number	PI error detection number	It is invalid.	When this is selected for DVD 1-layer or CD, T93 FFFFFFFFFF display.
94	The outer circumference of 1-layer	It is invalid.	It is invalid.	It is invalid.	When this is selected for BD, DVD or CD, T94 FFFFFFFFFF display.

* The inner circumference of the layer refers to the physical inner circumference for DVD parallel, the physical outer circumference for the opposite case.
* The inner circumference of the layer refers to the physical outer circumference for DVD parallel, the physical inner circumference for the opposite case.

PROCEDURE FIRMWARE FOR UPGRADING THE VERSION OF THE FIRMWARE

You can update by downloading the latest version from the Internet.

1. Update from the Internet

1.1. preparation

(1) System requirements

- Internet Connection by Broadband Circuit
- Modem
- Router
- Ethernet cable (CAT-5 or greater recommended)

(2) Setting

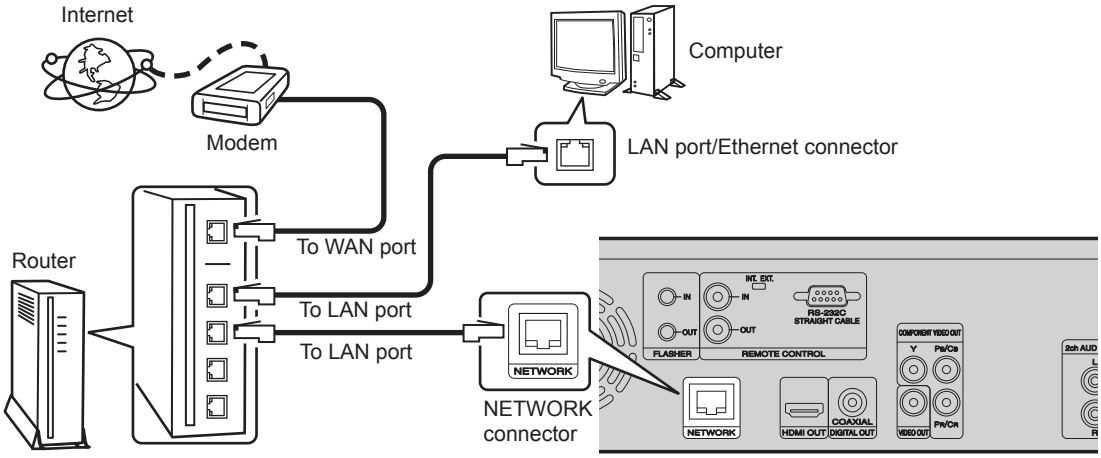

1.2. Checking and updating the firmware

Check if the latest firmware exists. You can also check approximately time required to complete an update.

(1) Press the SETUP button on the remote control to display the GUI menu.

(2) Use the cursor buttons to select "General Setting" → "System" → "Firmware Update" → "Update check".

(3) Press the ENTER button.

- The latest version of the firmware on the website is displayed.
- If the firmware on the website is latest, proceed to (4).
- If the latest firmware has been already installed, press the ⏮ button to return to SETUP menu.

(4) Use the Cursor buttons to select "Update", then press the ENTER button.

- When updating is completed, return to normal status about 20 seconds later.

--- Cautions on Firmware Update ---

- In order to update the firmware, you must have the correct system requirements and settings for a broadband Internet connection.
- Do not turn off the power until updating is completed.
- Once updating starts, normal operations on this unit cannot be performed until updating is completed. Also, setting items of the GUI menu of this unit or setting items of the image adjustment may be initialized.
  Note down of the settings before updating, and set them again after updating.

TROUBLE SHOOTING

1. POWER UNIT

The power cannot be turned on.

Check FUSE condition.
• FUSE [F101]

NO →
Defect of primary circuit component.
• [D101] (RBV1506)
• [U102] (STR-W6753)
• [U103] (STR-A6059H)
• [T101] (AEP-ERL28075 (SW_TRANS))
• [T102] (AEP-EE16202 (SW_TRANS))
and other circuits.

YES ↓

Check 5.5V_STBY output.
(N104 #13)
※ 5.5V ± 5%

NO →
Check parts and soldering.
• [U103] (STR-A6059H)
• [T102] (AEP-EE16202 (SW_TRANS))
• [U107] (PC817)
• [D119] (TL431)
and other circuits.

YES ↓

Check AC_DET signal output.
(N105 #1)
(AC50Hz 50Hz(1.2Vp-p))
(AC60Hz 60Hz(1.2Vp-p))

NO →
Check parts (surrounding) and soldering.
• [D112/D113] (IN4007)
• [U105] (PC817)
and other circuits.

YES ↓

Check Ps_On input.
(N105 #2)
※ Press the <ON/STANDBY> button to check.
Normally +3.3V is output.
※ OK if +3.3V is output even momentarily.

NO →
Check parts (surrounding) and soldering.
• [N105] (15PIN/FFC/1.0mm)
MAIN UNIT
• [U16] (CS8966F-PQFP447)
and other circuits.

YES ↓

Check ON of SMPS
• Is [Q6/Q7] switched?

NO →
Check parts (surrounding) and soldering.
• [Q101/Q102] (DTS114EUA)
• [Q104/U105] (2SC2458-Y)
• [U104/U106] (PC817)
and other circuits.

YES ↓

Check +12V output.
• (N102 #1)

NO →
Check parts (surrounding) and soldering.
• [U102] (STR-W6753)
• [T101] (AEP-ERL28075 (SW_TRANS))
• [U101] (PC817)
• [D122] (TL431)
• [D114] (FMEN-210A)
and other circuits.

YES ↓

Check +5V_A output.
• (JP2 #5)

NO →
Check parts (surrounding) and soldering.
• SUB POWER UNIT

YES ↓

Check +5V_B output.
• (N104 #8)

NO →
Check parts (surrounding) and soldering.
• SUB POWER UNIT

YES ↓

END

2. DISPLAY UNIT

2.1. FL TUBE doesn't light.

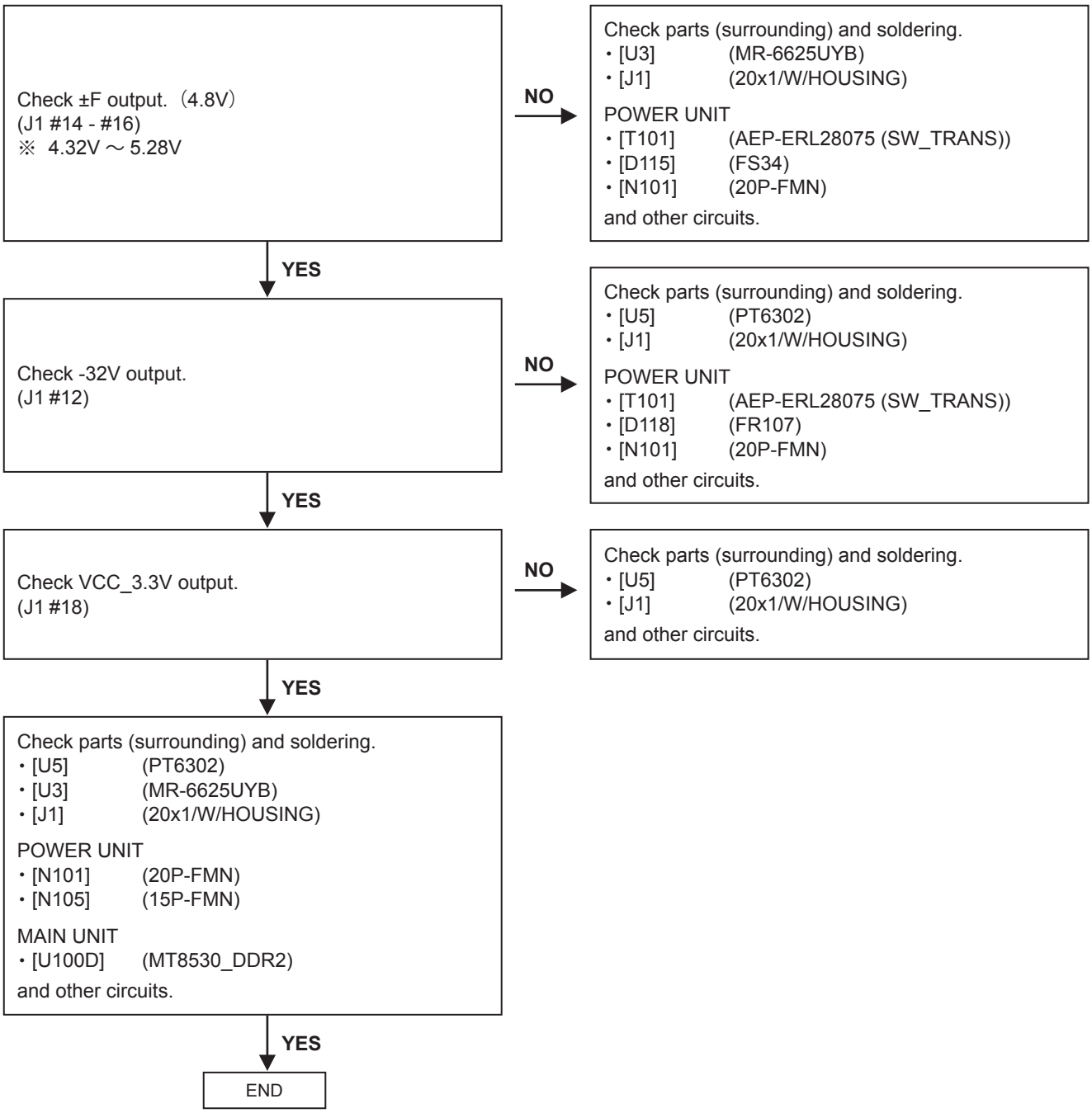

3. MAIN UNIT

3.1 Video out doesn't output.

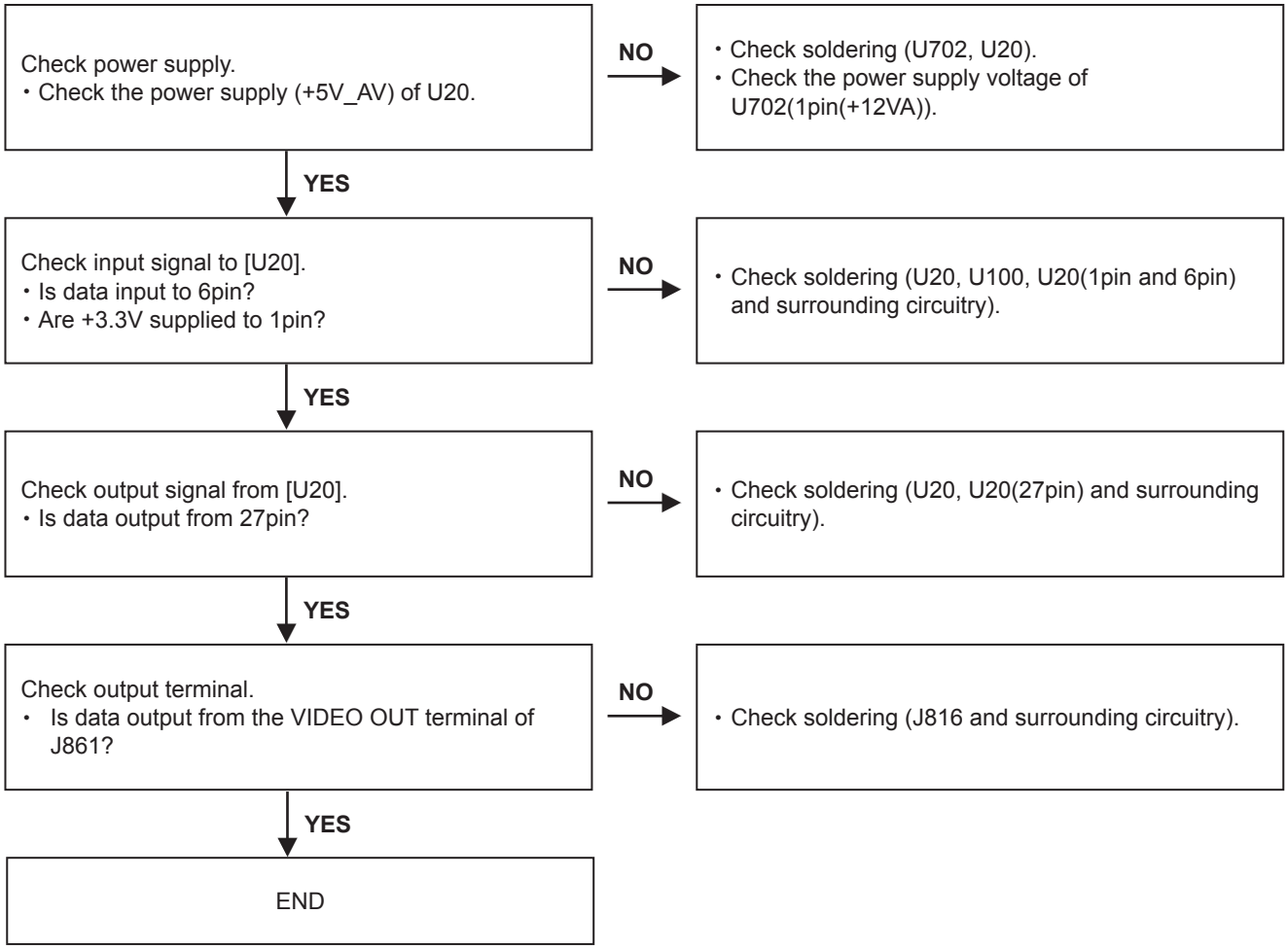

3.2. Component out doesn't output.

Check power supply.
- Check the power supply (1.0V_ABT, 1.8V_ABT, +3.3V_V) of U22.
- Check the power supply (+3.3V_DDST) of U225.
- Check the power supply (+1.8V_VIDEO, +3.3V_V) of U228.
- Check the power supply (+5V_AV) of U20.

NO →
- Check soldering (U7, U13, U17, U702 and surrounding circuitry).

YES ↓

Check output signal of [U100].
- Is the signal of VOUTCLK1, VOUTVSYNC and VOUTHSYNC output?
- Is the signal output to VOUT19-12 and VOUT9-2?

NO →
- Check soldering (U100 and each signal line and surrounding circuitry).

YES ↓

Check output signal of [U22].
- Is the signal of ABT2015_OUT_VCLK0_R/VSN_R/HSN_R/DE_R output?
- Is the signal output to ABT2015_Y11_R-Y0_R, ABT2015_CB11_R-CB0_R, and ABT2015_CR11_R-CR0_R?
- Is the sine wave of 27MHz output to X6?
- Are +3.3V supplied to RST_2015_N?

NO →
- Check soldering (U22 and each signal line and surrounding circuitry).
- Check soldering (X6 and surrounding circuitry).

YES ↓

Check output signal of [U225].
- Is the signal of DOCMP_CLK_T6/VS_T10/HS_R10/DE_R9 output?
- Is the signal output to DOCMP_Y7_R12-Y0_N16, DOCMP_Cb7_T4-Cb0_T12 and DOCMP_Cr7_M15-Cr0_J16?
- Are +3.3V supplied to DDST_RSTn_M9?

NO →
- Check soldering (U225 and each signal line and surrounding circuitry).

YES ↓

Check output signal of [U228].
- Is the signal output from 44pin, 43pin, and 42pin?

NO →
- Check soldering (U228 and each signal line and surrounding circuitry).

YES ↓

Check output signal of [U20].
- Is the signal output from 23pin, 21pin, and 18pin?
- Are +3.3V supplied to 15pin

NO →
- Check soldering (U20 and each signal line and surrounding circuitry).

YES ↓

Check the voltage of the output terminal.
- Is data output from the COMPONENT VIDEO OUT terminal of J861?

NO →
- Check soldering (U861 and surrounding circuitry).

YES ↓

END

3.3. HDMI out doesn't output.

Check power supply.
- Check the power supply (1.0V_ABT, 1.8V_ABT, +3.3V_V) of U22.
- Check the power supply (+3.3V_DDST) of U225.
- Check the power supply (+1.8V_VIDEO, +3.3V_V) of U228.
- Check the power supply (+5V_AV) of U20.

NO →
- Check soldering (U7, U13, U17, U702 and surrounding circuitry).

YES ↓

Check output signal of U100.
- Is the signal of VOUTCLK1, VOUTVSYNC, VOUTHSYNC output?
- Is the signal output to VOUT19-12, VOUT9-2?

NO →
- Check soldering (U100 and each signal line and surrounding circuitry).

YES ↓

Check output signal of U22.
- Is the signal of ABT2015_OUT_VCLK0_R/VSN_R/HSN_R/DE_R output?
- Is the signal output toABT2015_Y11_R-Y0_R, ABT2015_CB11_R-CB0_R and ABT2015_CR11_R-CR0_R?
- Is the sine wave of 27MHz output to X6?
- Are +3.3V supplied to RST_2015_N?

NO →
- Check soldering (U22 and each signal line and surrounding circuitry).
- Check soldering (X6 and surrounding circuitry).

YES ↓

Check output signal of U225.
- Is the signal of DOHM_CLK_A10/VS_A15/HS_B13/DE_A13 output?
- Is the signal output to DOHM_Y11_C7-Y0_C12, DOHM_Cb11_A9-Cb0_B12 and DOHM_Cr11_C3-Cr0_B6?
- Are +3.3V supplied to DDST_RSTn_M9?

NO →
- Check soldering (U225 and each signal line and surrounding circuitry)

YES ↓

Check output signal U25.
- Is the signal output from 30pin, 31pin, 33pin, 34pin, 36pin, 37pin, 39pin, and 40pin?
- Are +3.3V supplied to 30pin?

NO →
- Check soldering (U25 and each signal line and surrounding circuitry).

YES ↓

END

3.4 Digital Out(COAX) doesn't output.

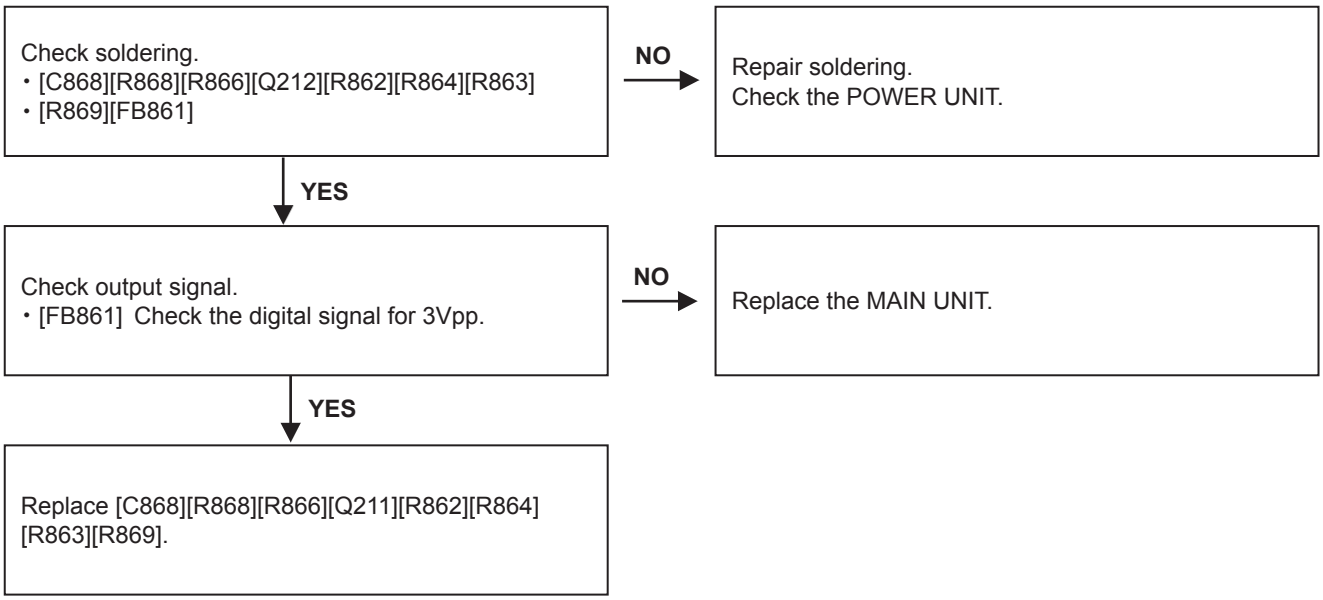

3.5. Ether is not connection.

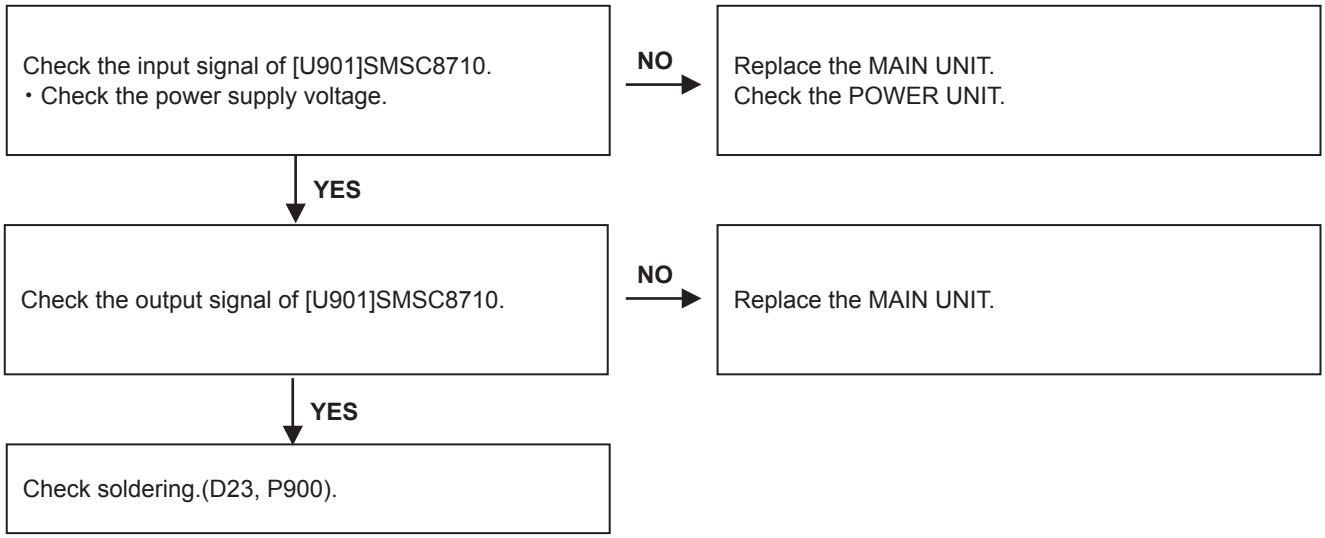

4. AUDIO UNIT

4.1. Audio doesn't output.

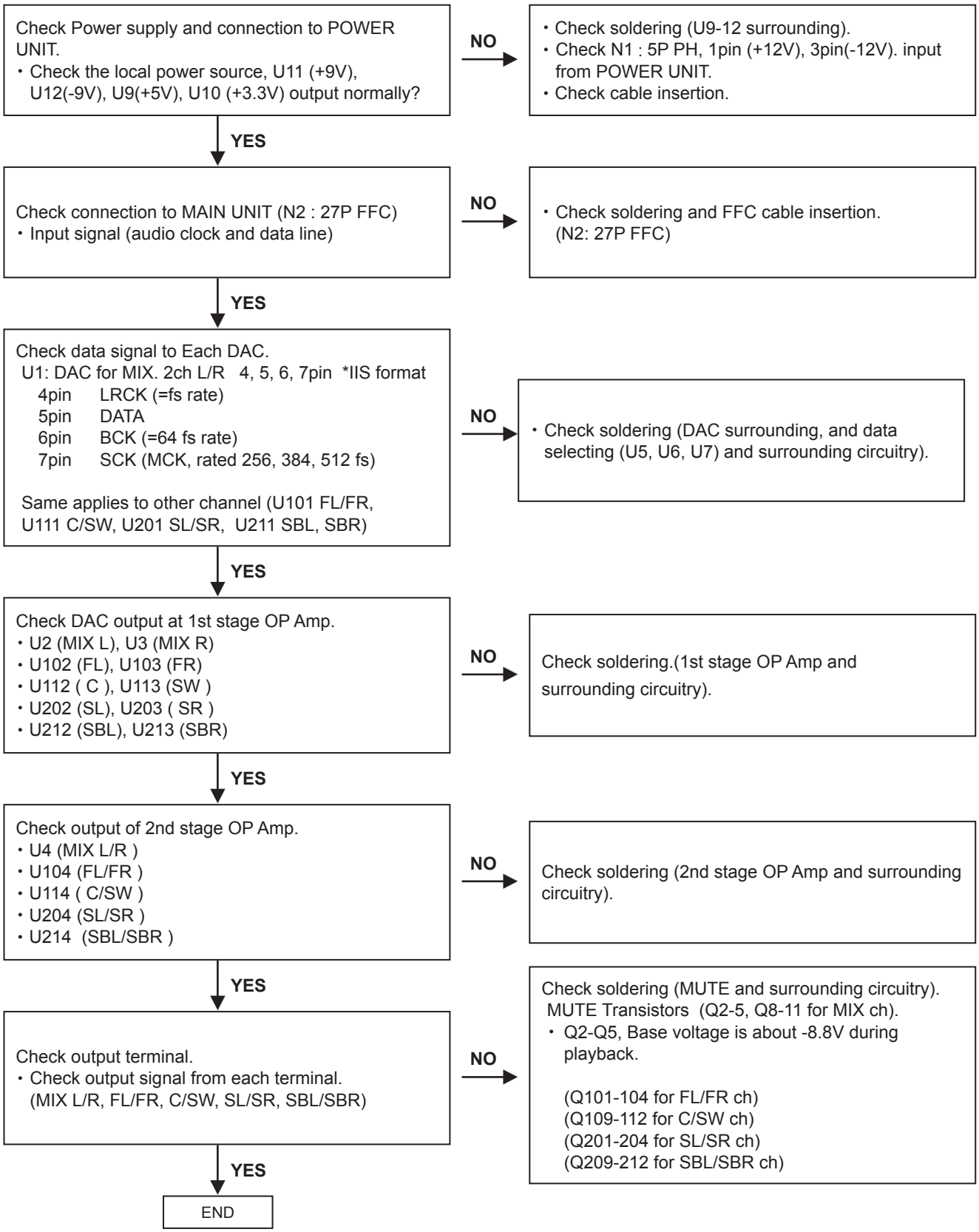

MEASURING METHOD AND WAVEFORMS

To check the waveforms on the Main P.W.B., the GND (-) probe of the oscilloscope to ⑤“CE30” point.

Measuring Disc: BLX-104 (Blu-ray disc)
Playback Content: Title 1 , chapter 1 Color Bar 100%
(Main Menu → 59.94Hz 1080i 1.Video signal → 1.Color Bar 100%)
Component output resolution: 1080i

(It is better to use wires for extending between the probe and test points.)
Since there are no test points for locations ① to ④, confirm the signals at the land of a chip resistor.

MAIN UNIT:TEST POINT AND WAVEFORMS

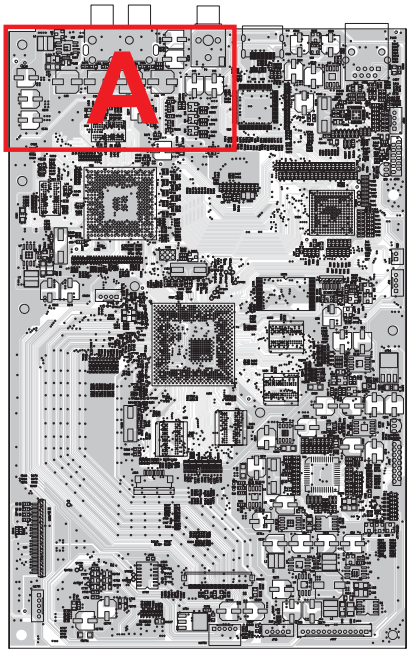

Component side

Detail A

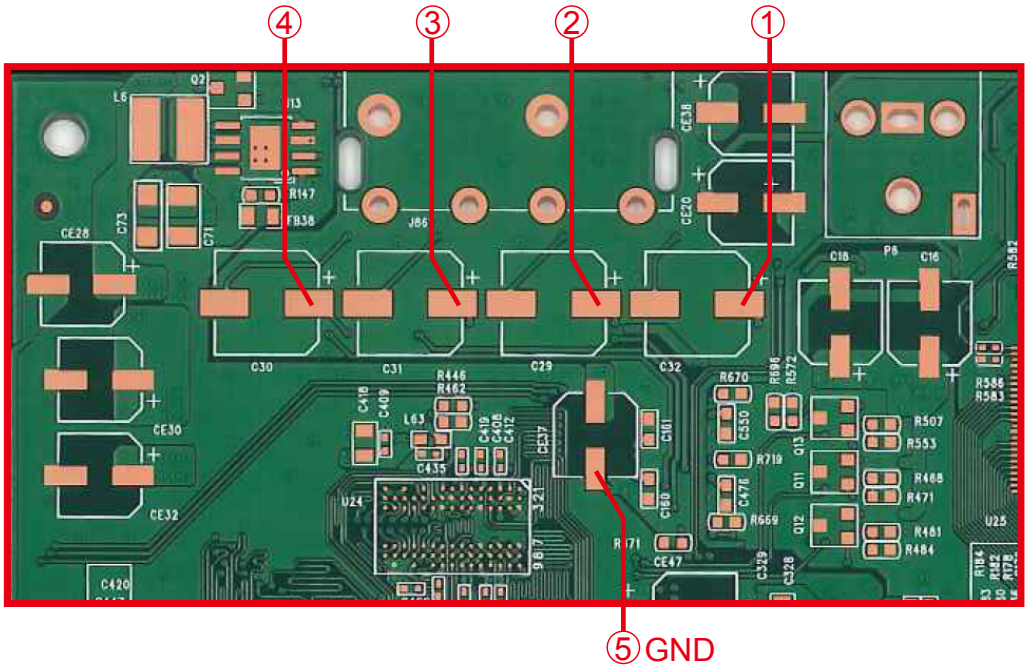

①U20 (NJM2566)_Video out_signal (C32)

① Video out_signal

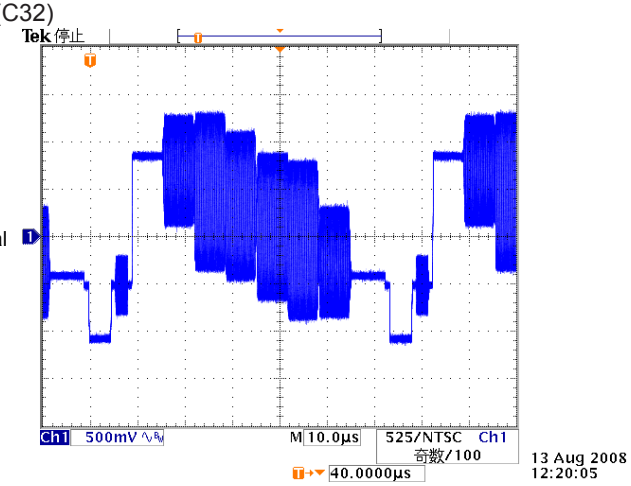

②-④U20 (NJM2566)_Component out_Y/Cb/Cr signal (Y:C29, Cb:C30, Cr:C31)

② Component out_Y signal

③ Component out_Cb signal

④ Component out_Cr signal

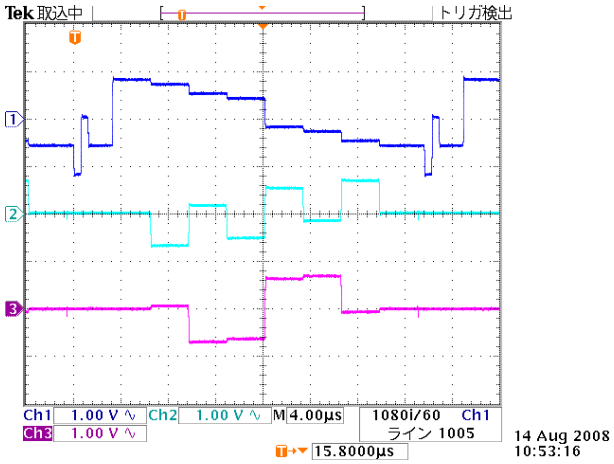

Terminal output check

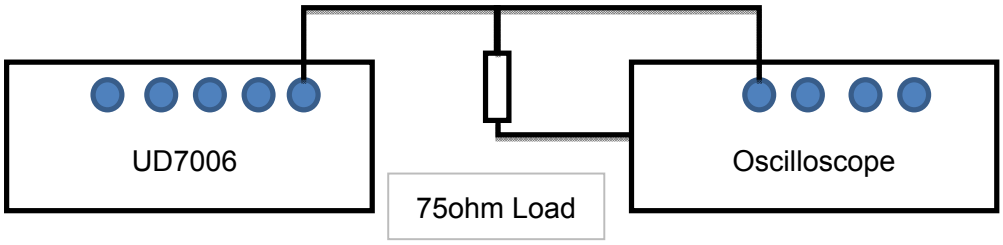

Video Out terminal check

Video out_signal

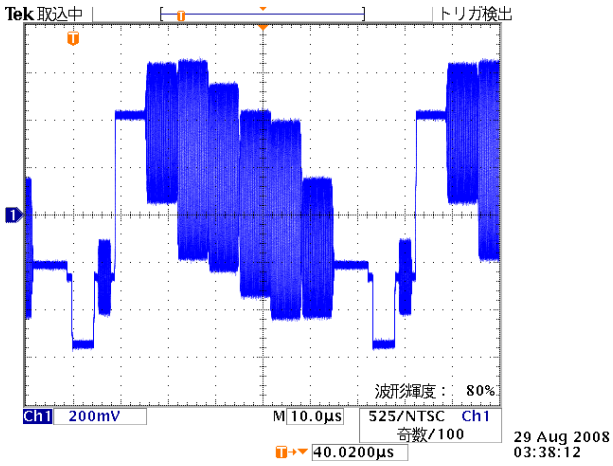

Component Out terminal check

Component out_Y signal

Component out_Cb signal

Component out_Cr signal

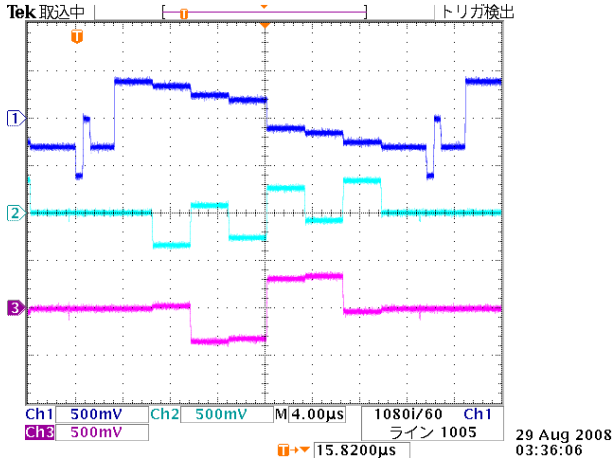

BLOCK DIAGRAM

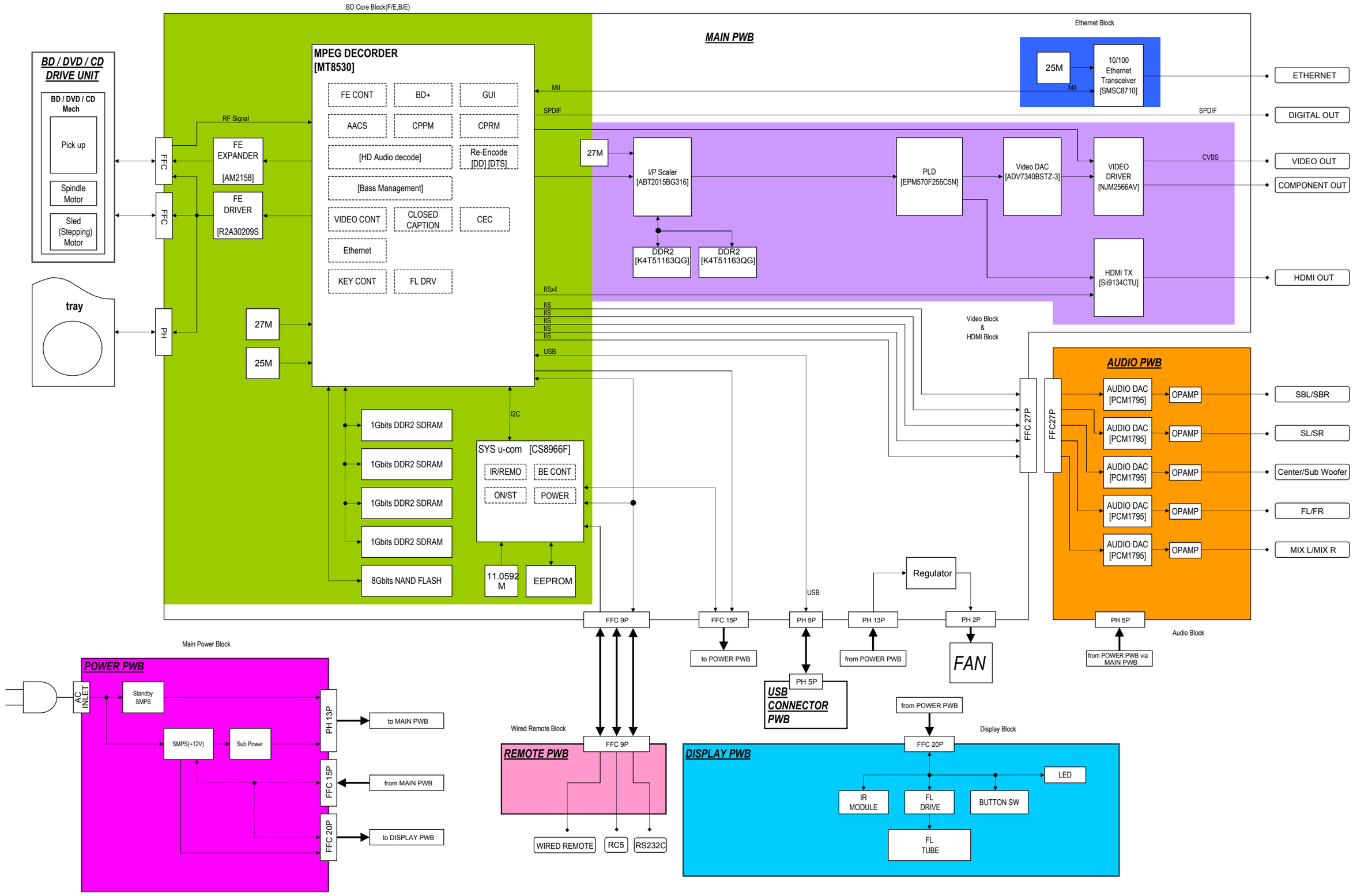

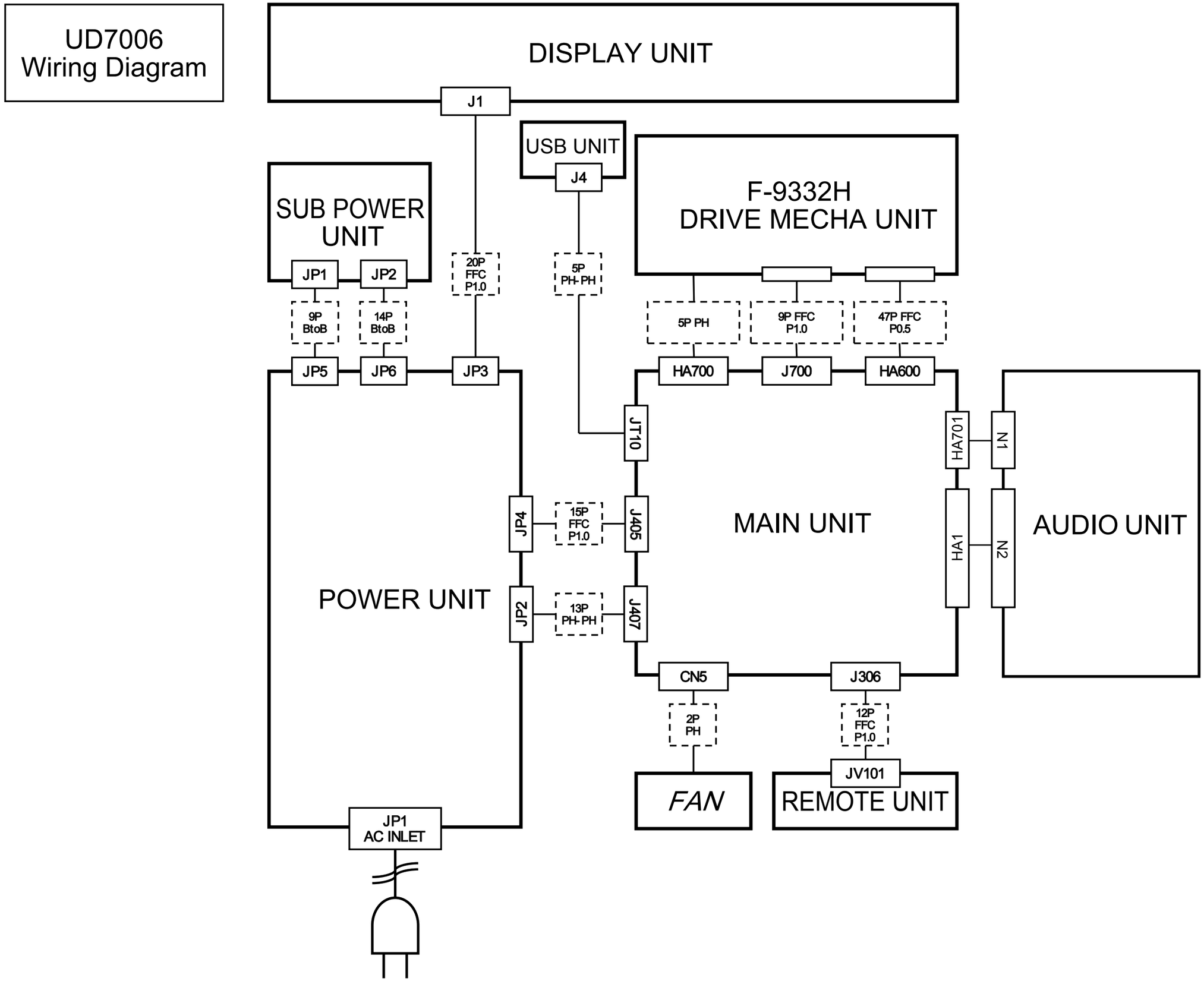
UD7006
Wiring Diagram
DISPLAY UNIT
J1
USB UNIT
J4
SUB POWER UNIT
JP1
JP2
F-9332H
DRIVE MECHA UNIT
20P FFC P1.0
5P PH-PH
9P BtoB
14P BtoB
5P PH
9P FFC P1.0
47P FFC P0.5
JP5
JP6
JP3
HA700
J700
HA600
JT10
HA701
N1
JP4
15P FFC P1.0
J405
MAIN UNIT
HA1
N2
AUDIO UNIT
POWER UNIT
JP2
13P PH-PH
J407
CN5
J306
2P PH
12P FFC P1.0
JV101
FAN
REMOTE UNIT
JP1
AC INLET

PRINTED WIRING BOARDS

MAIN (COMPONENT SIDE)

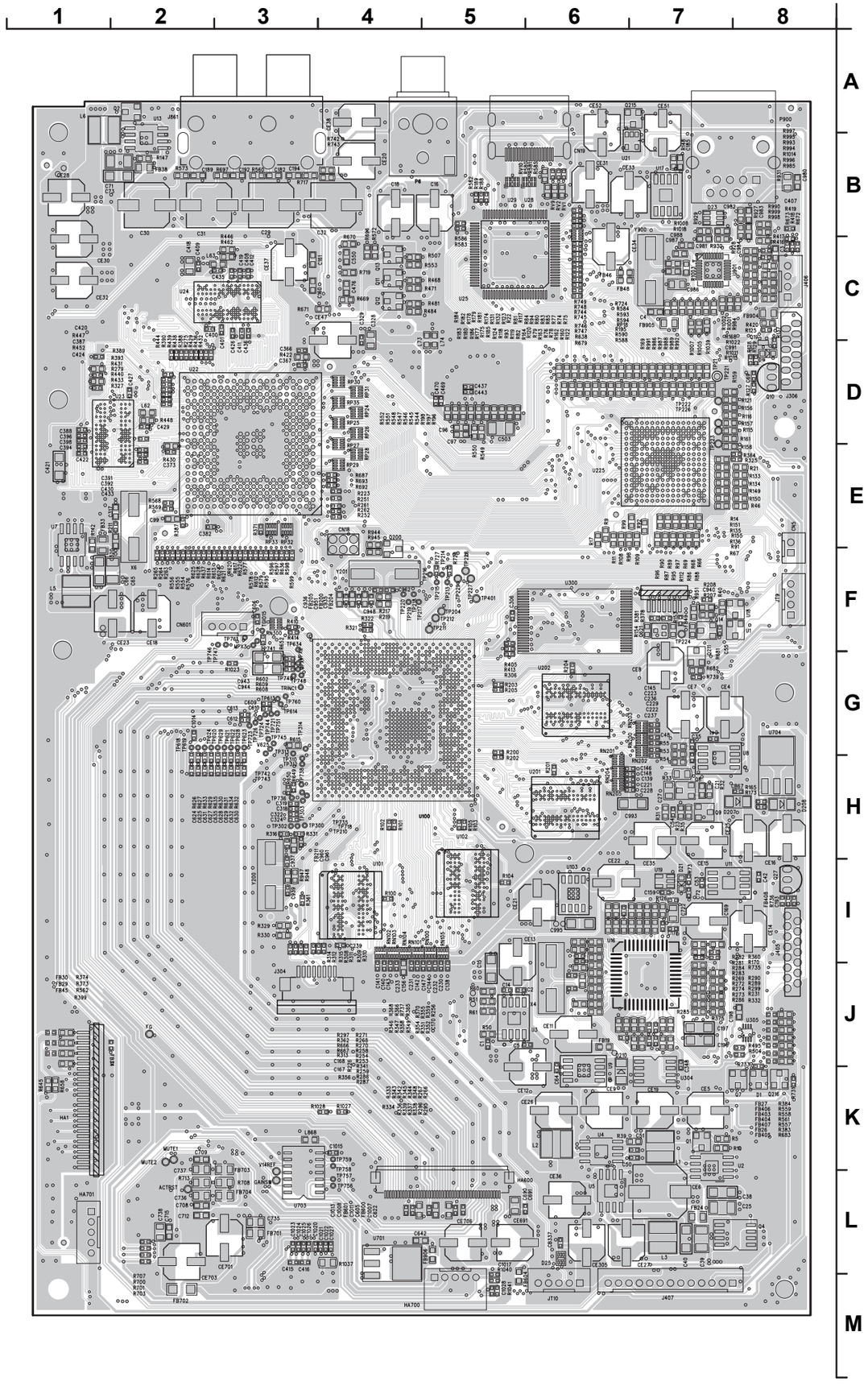

鉛フリー半田

半田付けには、鉛フリー半田 (Sn-Ag-Cu) を使用してください。

Lead-free Solder

When soldering, use the Lead-free Solder (Sn-Ag-Cu).

MAIN (FOIL SIDE)

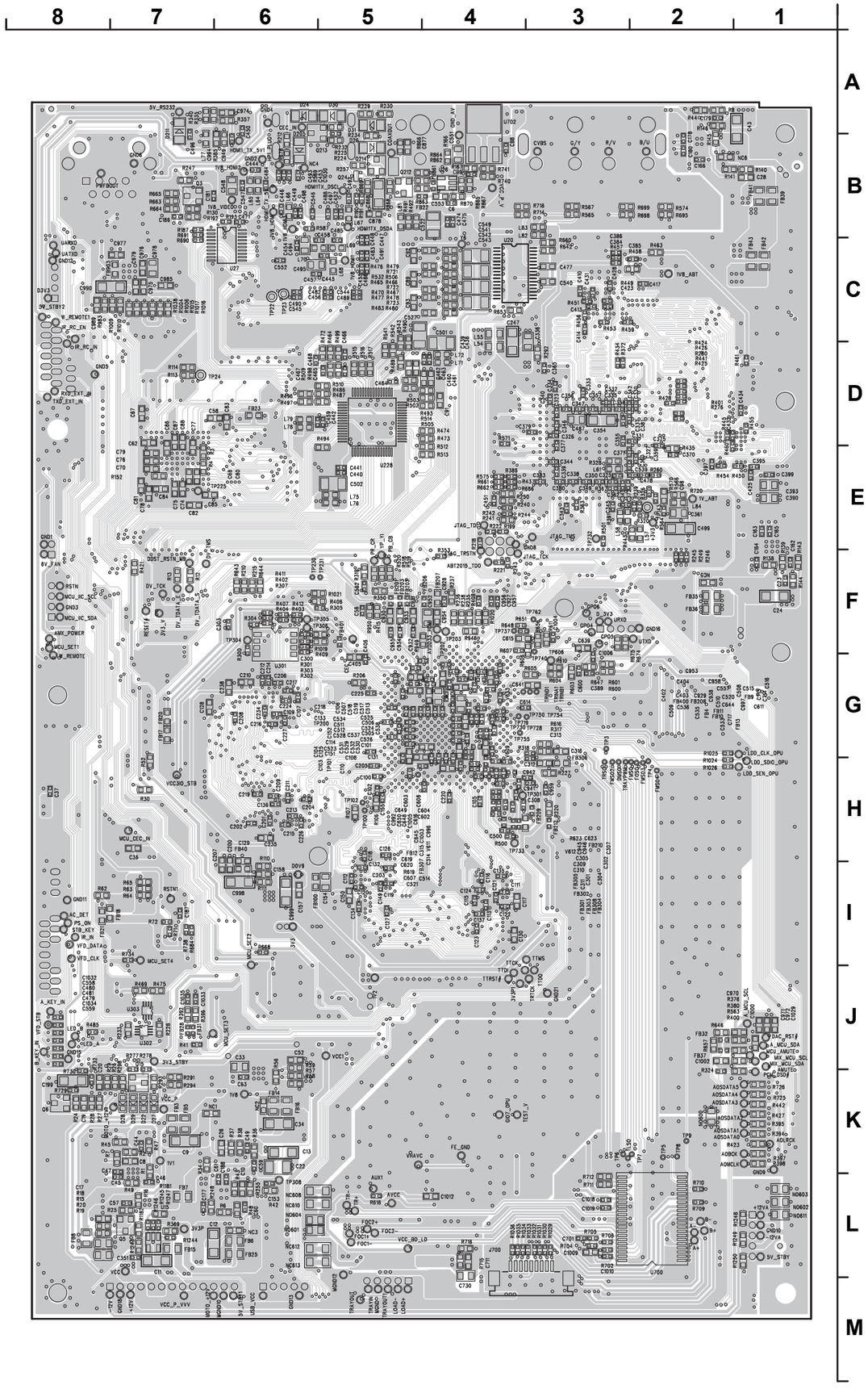

鉛フリー半田
半田付けには、鉛フリー半田 (Sn-Ag-Cu) を使用してください。

Lead-free Solder
When soldering, use the Lead-free Solder (Sn-Ag-Cu).

DISPLAY (COMPONENT SIDE)

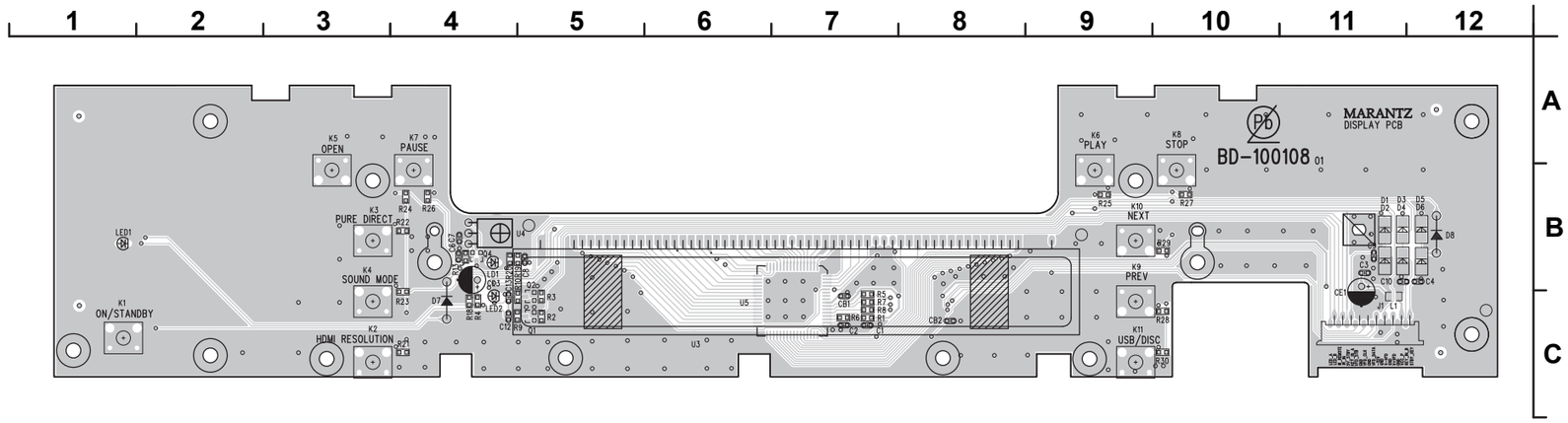

USB (COMPONENT SIDE)

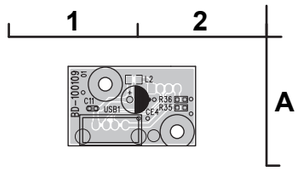

POWER (COMPONENT SIDE)

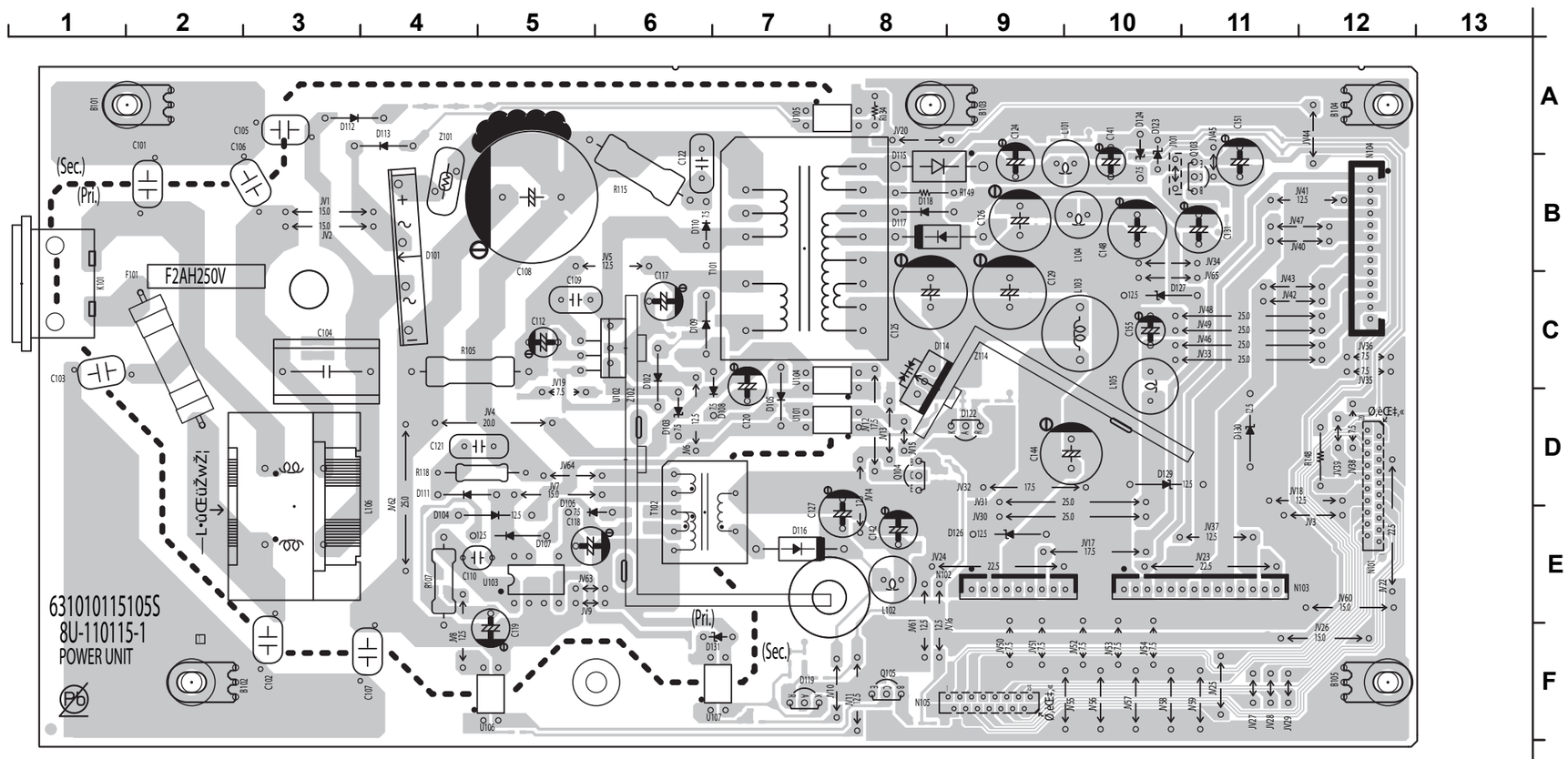

鉛フリー半田
半田付けには、鉛フリー半田 (Sn-Ag-Cu) を使用してください。

Lead-free Solder
When soldering, use the Lead-free Solder (Sn-Ag-Cu).

USB- (FOIL SIDE)

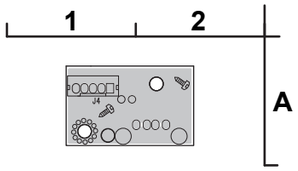

DISPLAY (FOIL SIDE)

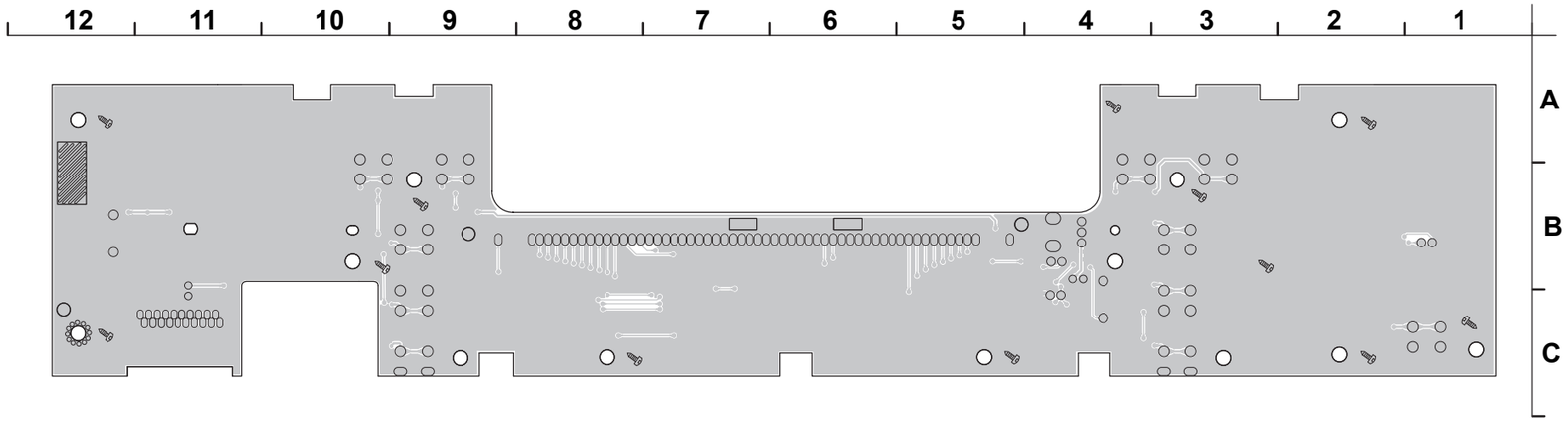

POWER (FOIL SIDE)

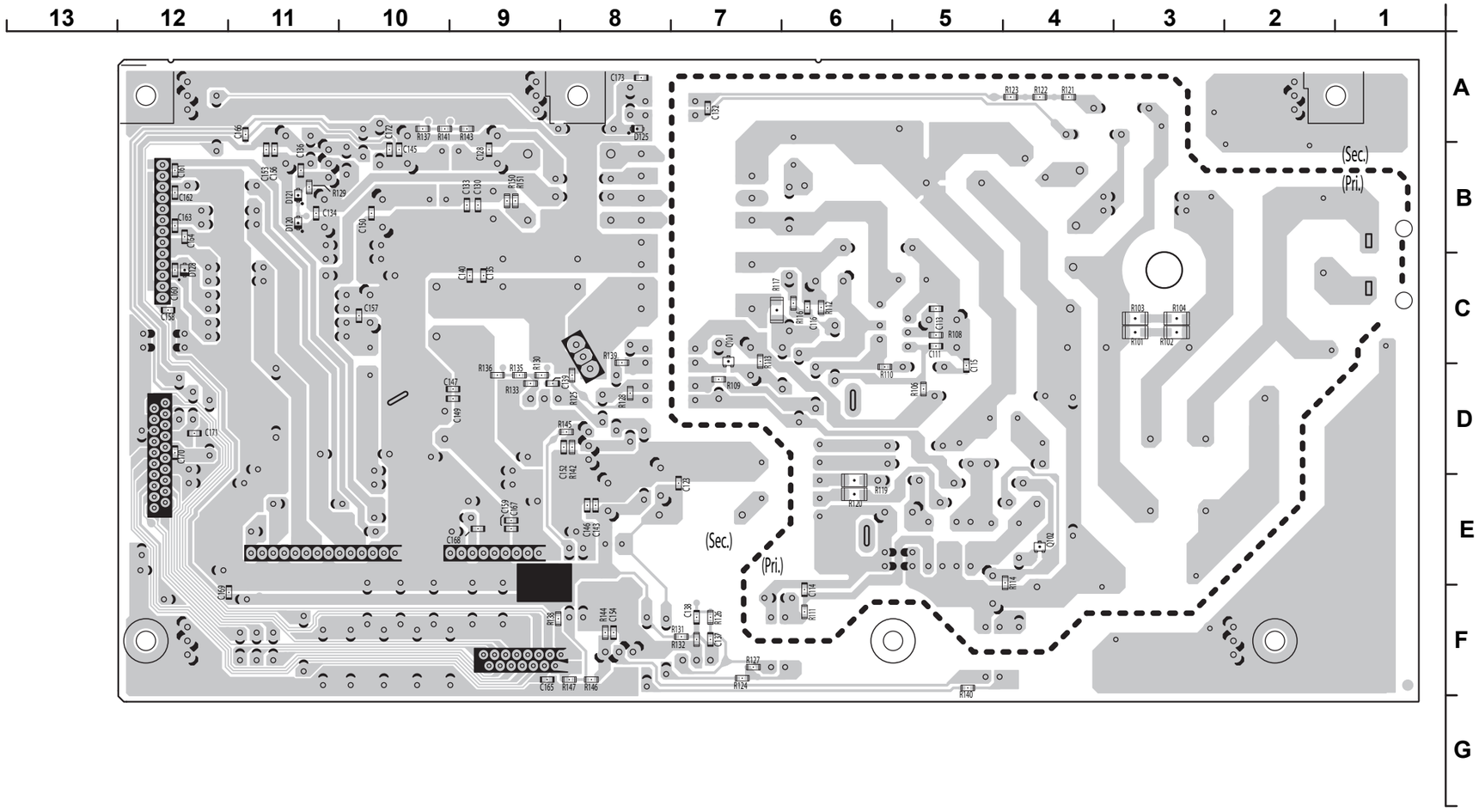

鉛フリー半田
半田付けには、鉛フリー半田 (Sn-Ag-Cu) を使用してください。

Lead-free Solder
When soldering, use the Lead-free Solder (Sn-Ag-Cu).

IR (COMPONENT SIDE)

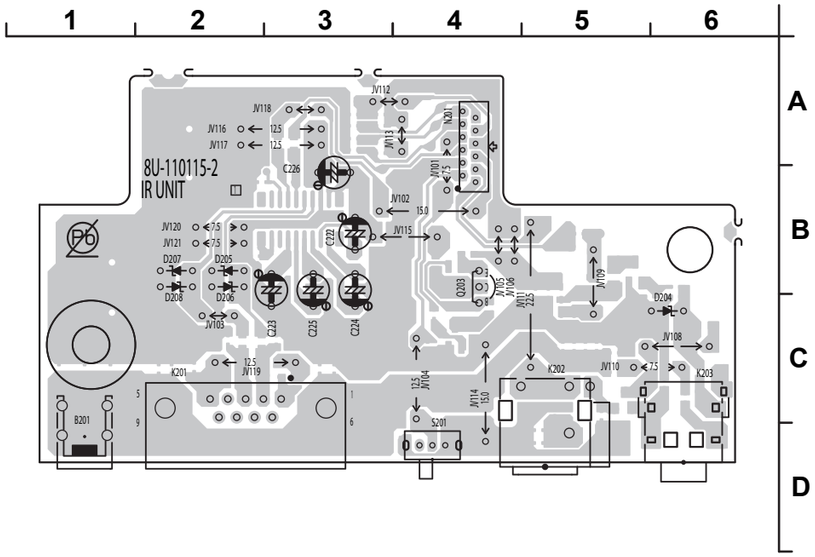

SUB POWE (COMPONENT SIDE)

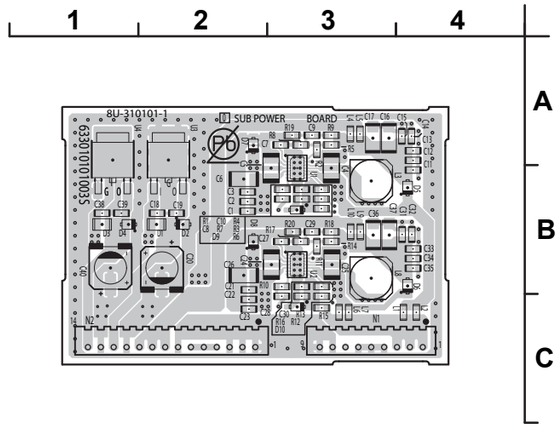

AUDIO (COMPONENT SIDE)

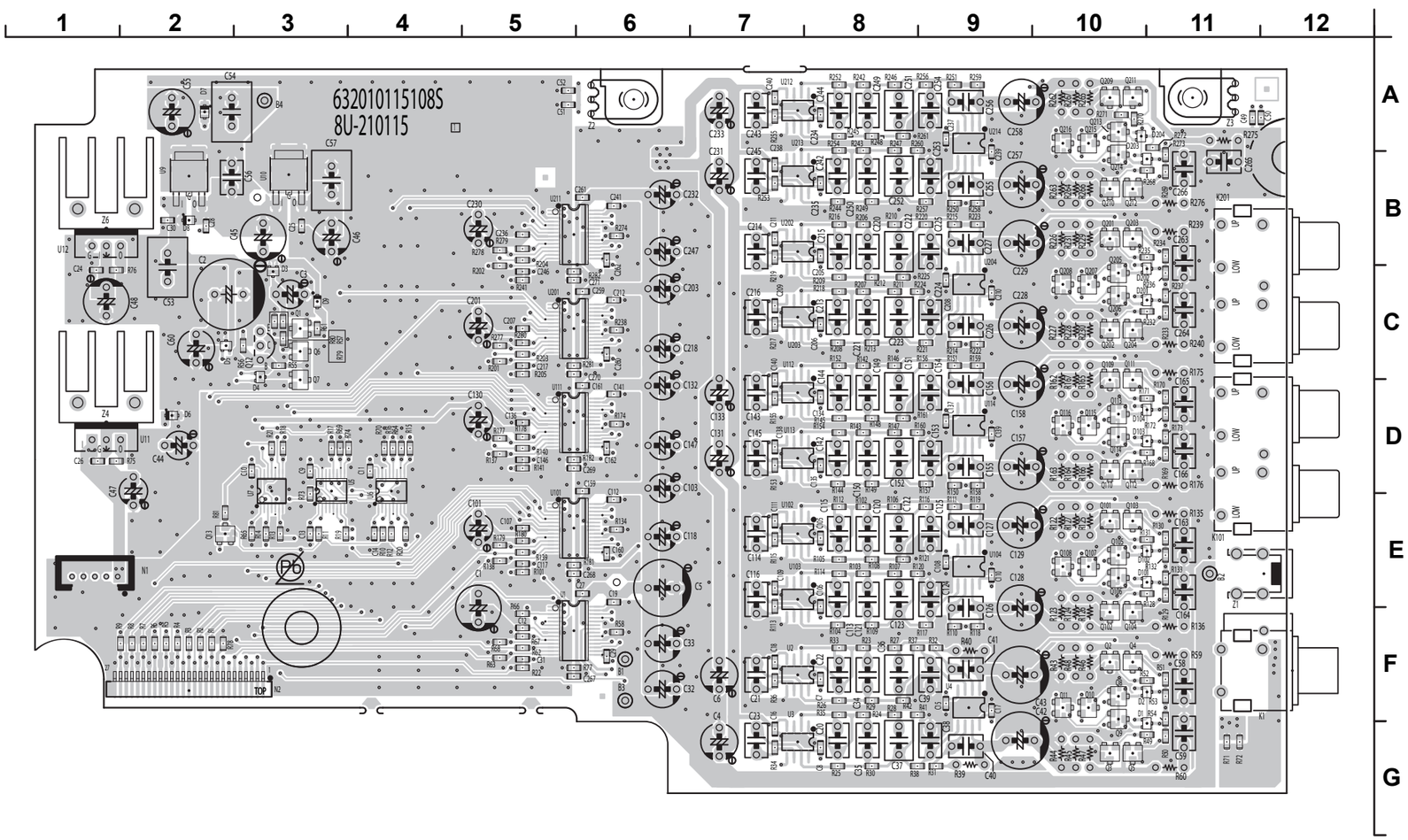

鉛フリー半田
半田付けには、鉛フリー半田 (Sn-Ag-Cu) を使用してください。

Lead-free Solder
When soldering, use the Lead-free Solder (Sn-Ag-Cu).

IR (FOIL SIDE)

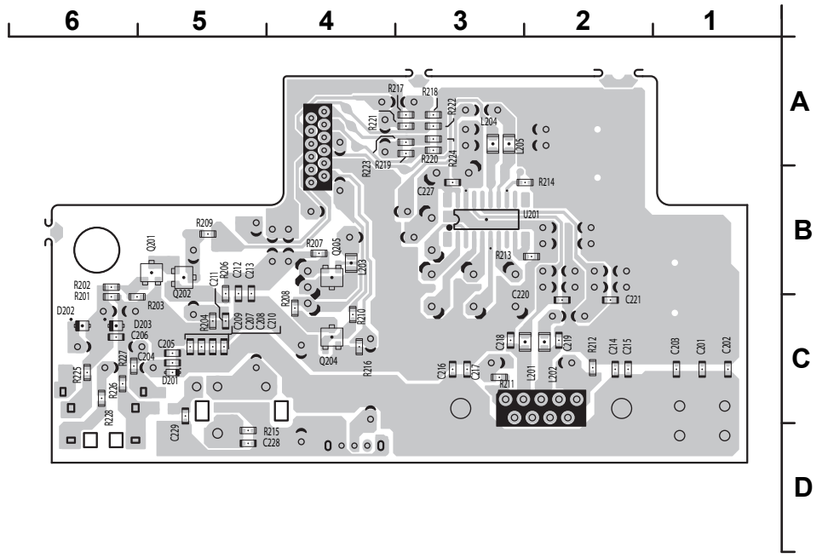

SUB POWE (FOIL SIDE)

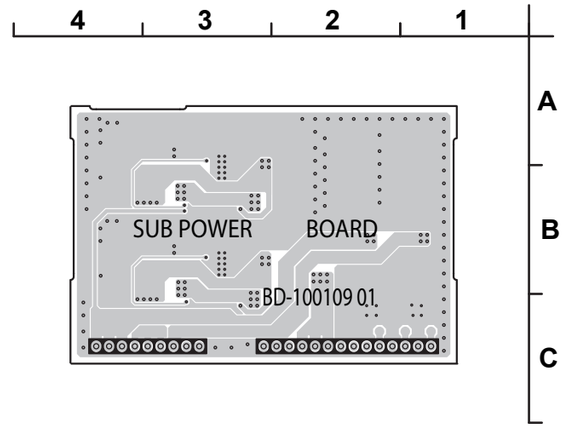

AUDIO (FOIL SIDE)

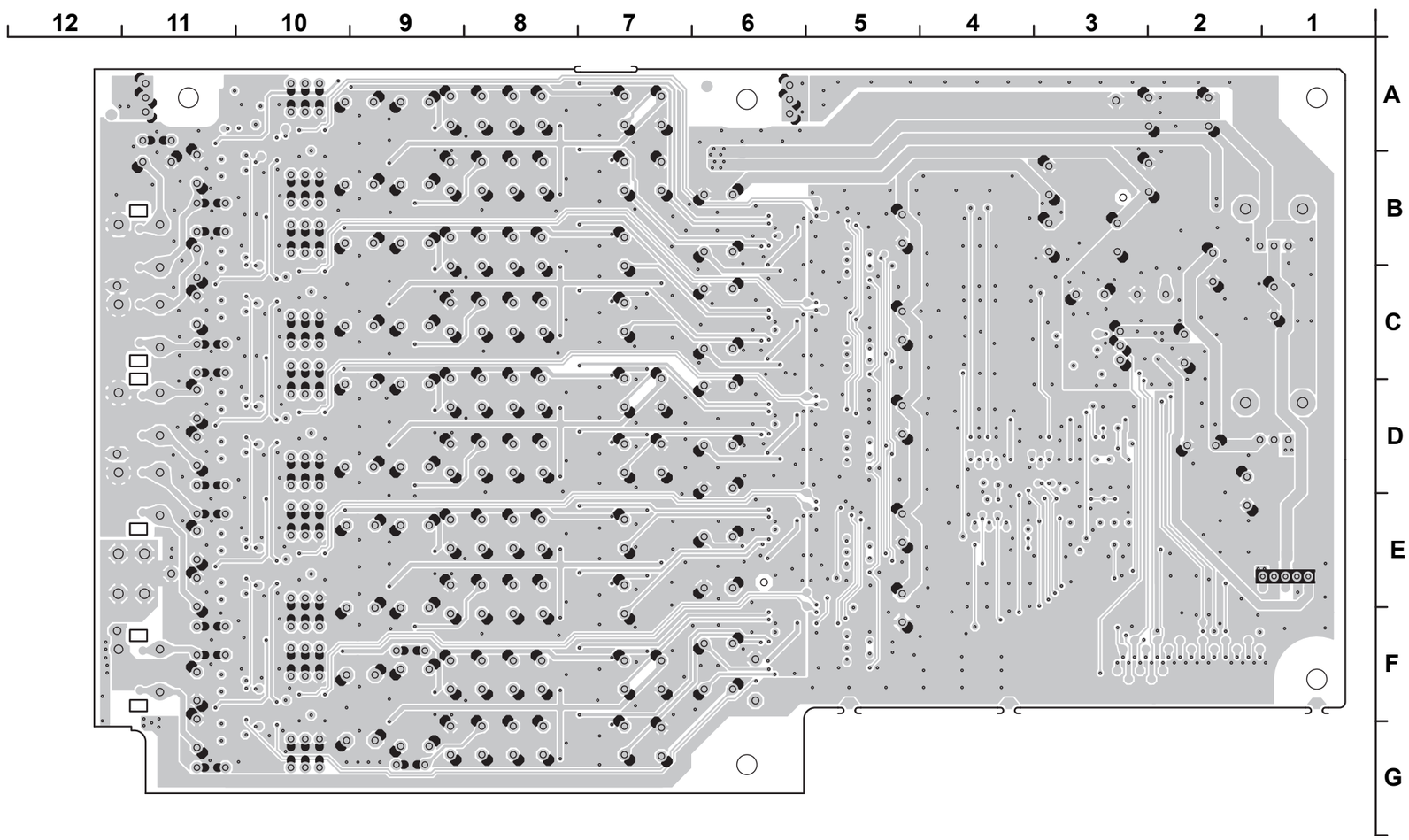

鉛フリー半田
半田付けには、鉛フリー半田 (Sn-Ag-Cu) を使用してください。

Lead-free Solder
When soldering, use the Lead-free Solder (Sn-Ag-Cu).

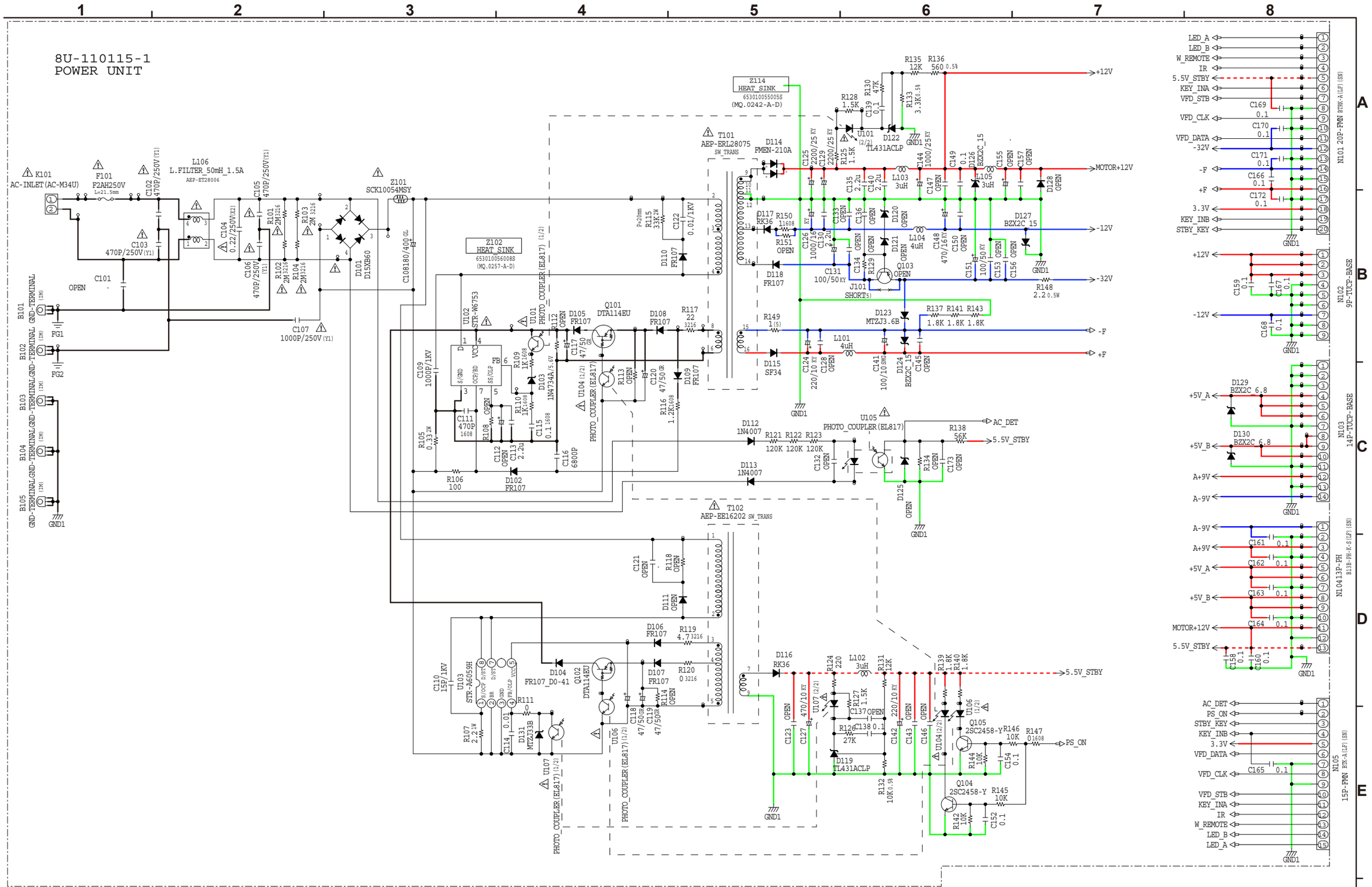

GND POWER + POWER - STBY POWER

SCHEMATIC DIAGRAMS (1/26)

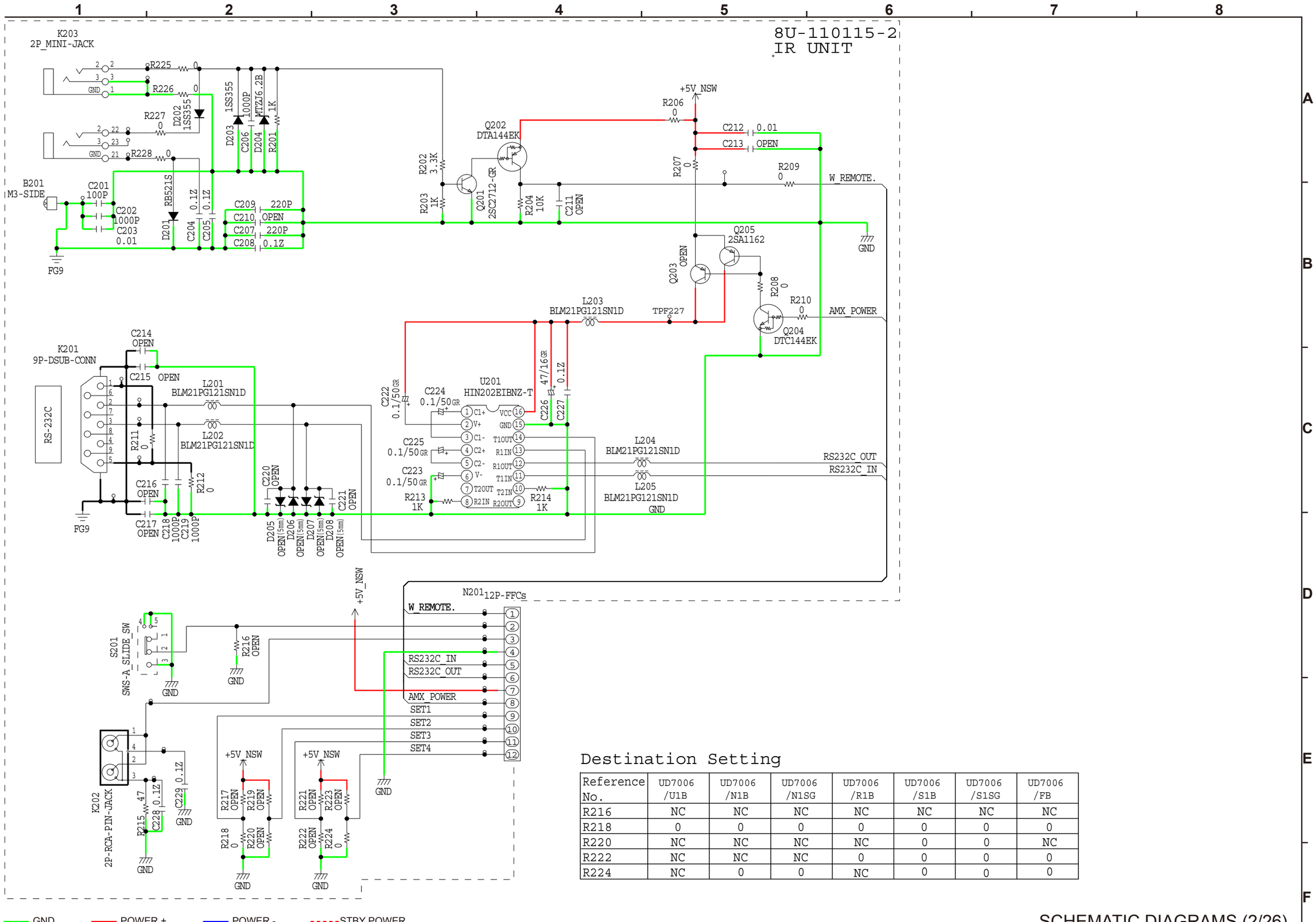

Destination Setting

Reference No.	UD7006 /U1B	UD7006 /N1B	UD7006 /N1SG	UD7006 /R1B	UD7006 /S1B	UD7006 /S1SG	UD7006 /FB
R216	NC	NC	NC	NC	NC	NC	NC
R218	0	0	0	0	0	0	0
R220	NC	NC	NC	NC	0	0	NC
R222	NC	NC	NC	0	0	0	0
R224	NC	0	0	NC	0	0	0

GND — POWER + — POWER - — STBY POWER

SCHEMATIC DIAGRAMS (2/26)

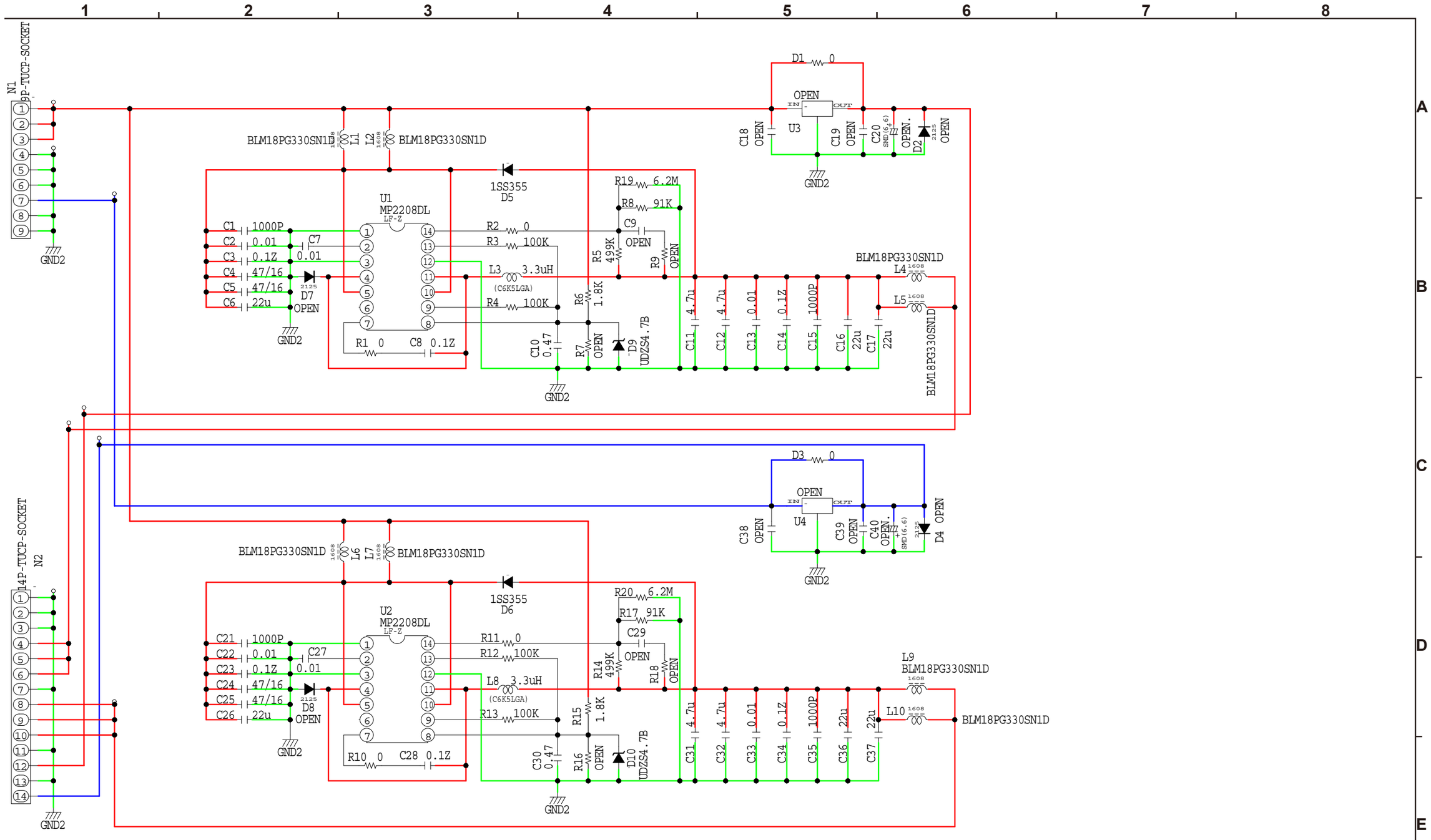

GND POWER + POWER - STBY POWER

SCHEMATIC DIAGRAMS (3/26)

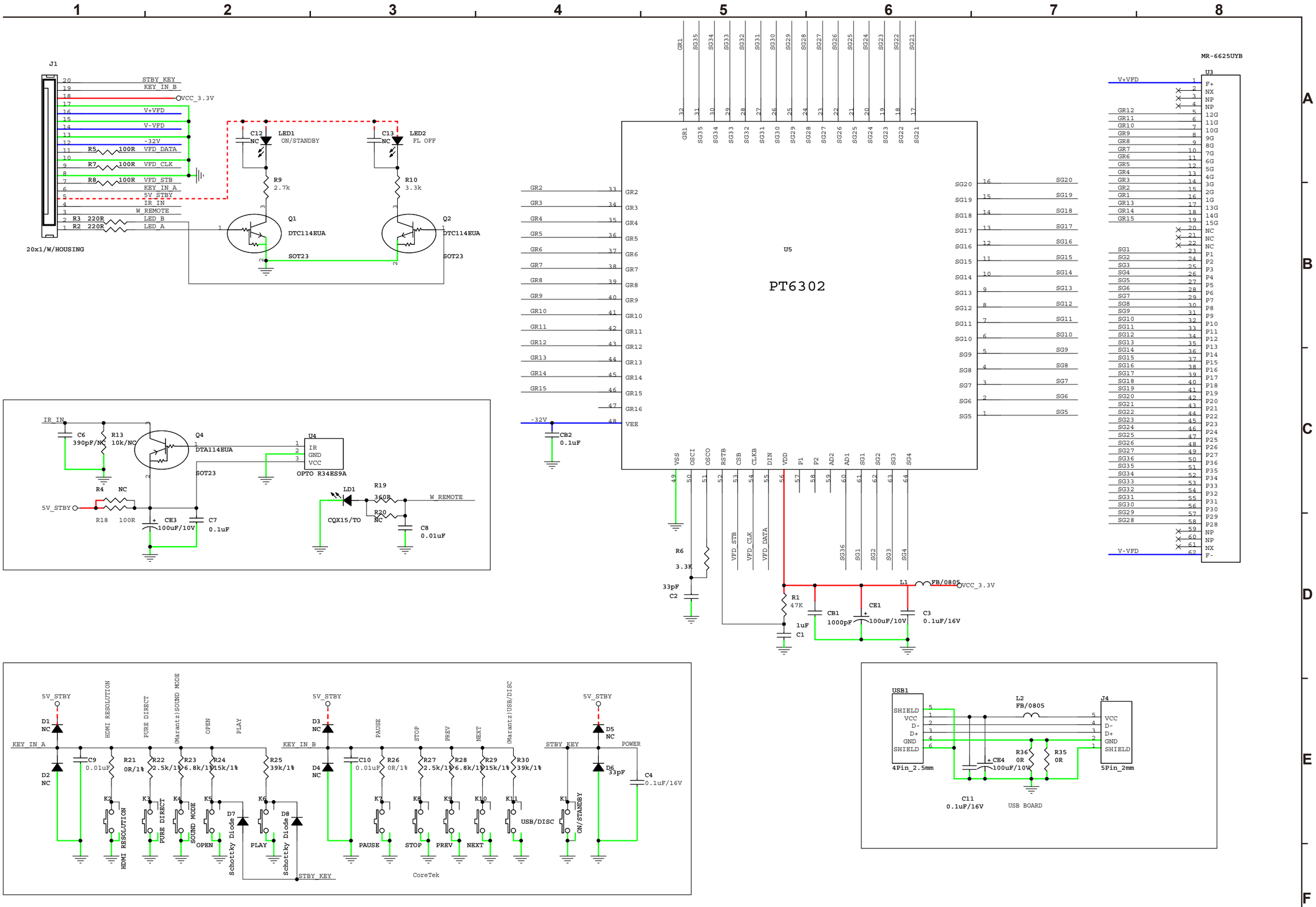

GND — POWER + — POWER - — STBY POWER

SCHEMATIC DIAGRAMS (4/26)

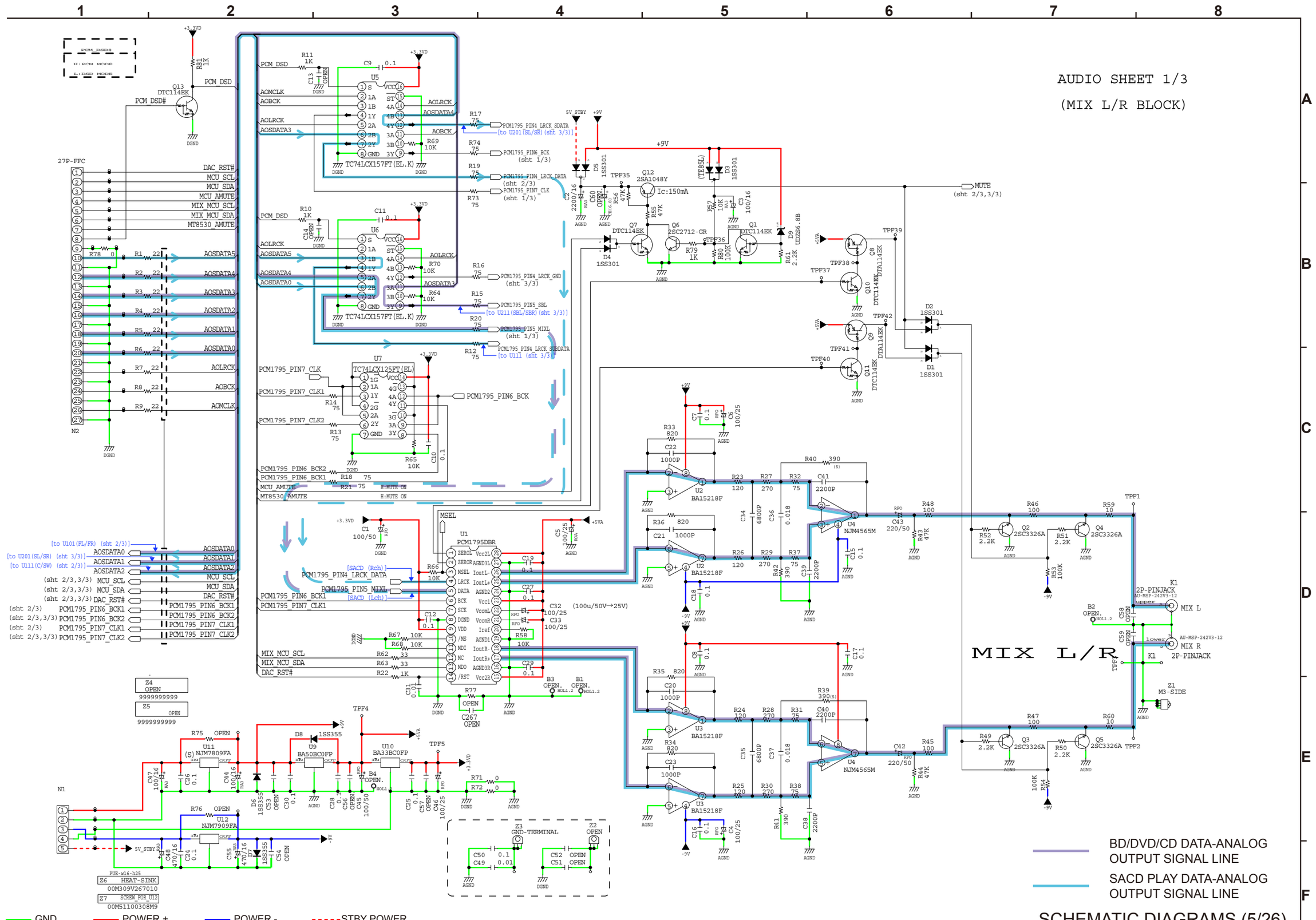

SCHEMATIC DIAGRAMS (5/26)

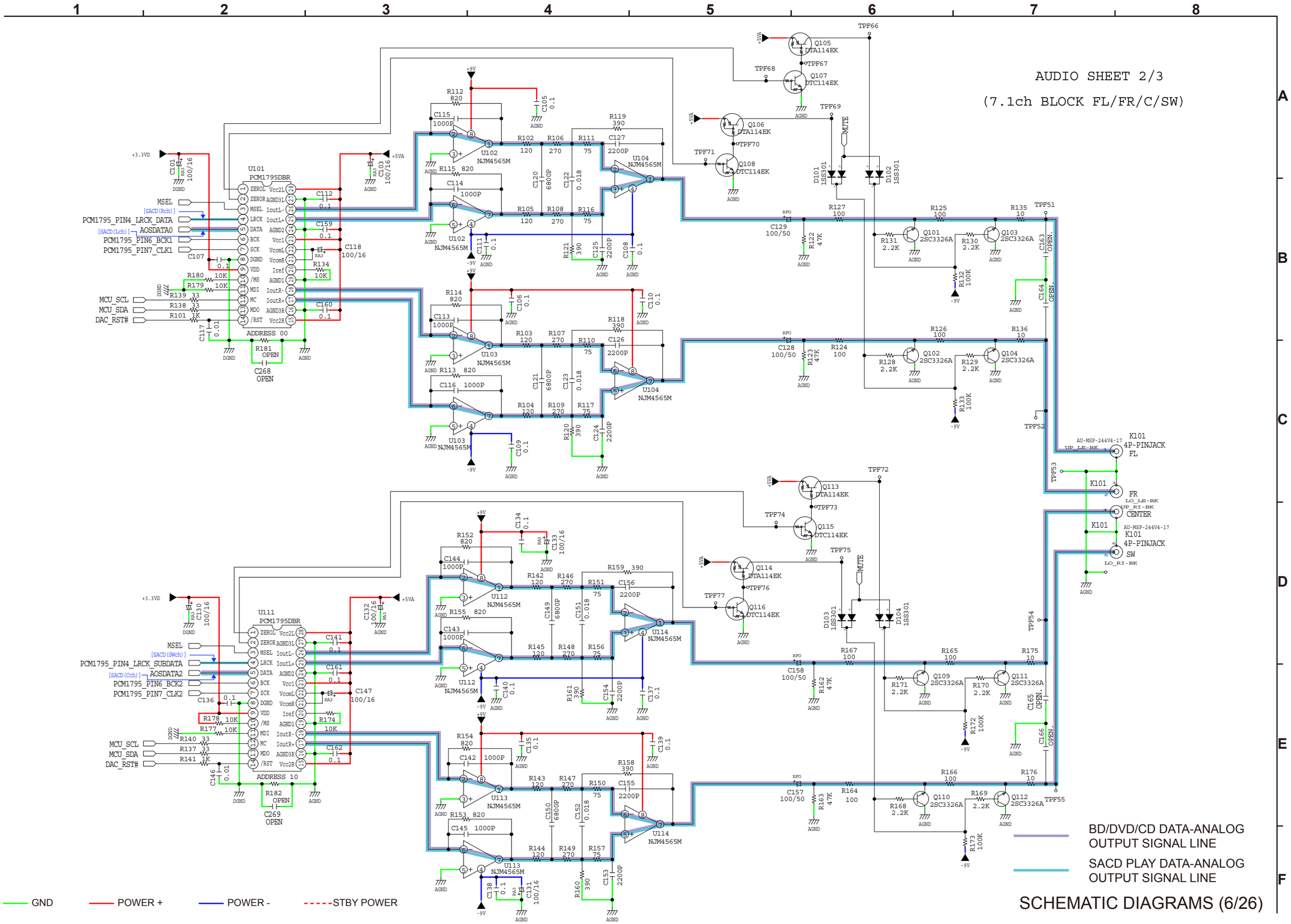

SCHEMATIC DIAGRAMS (6/26)

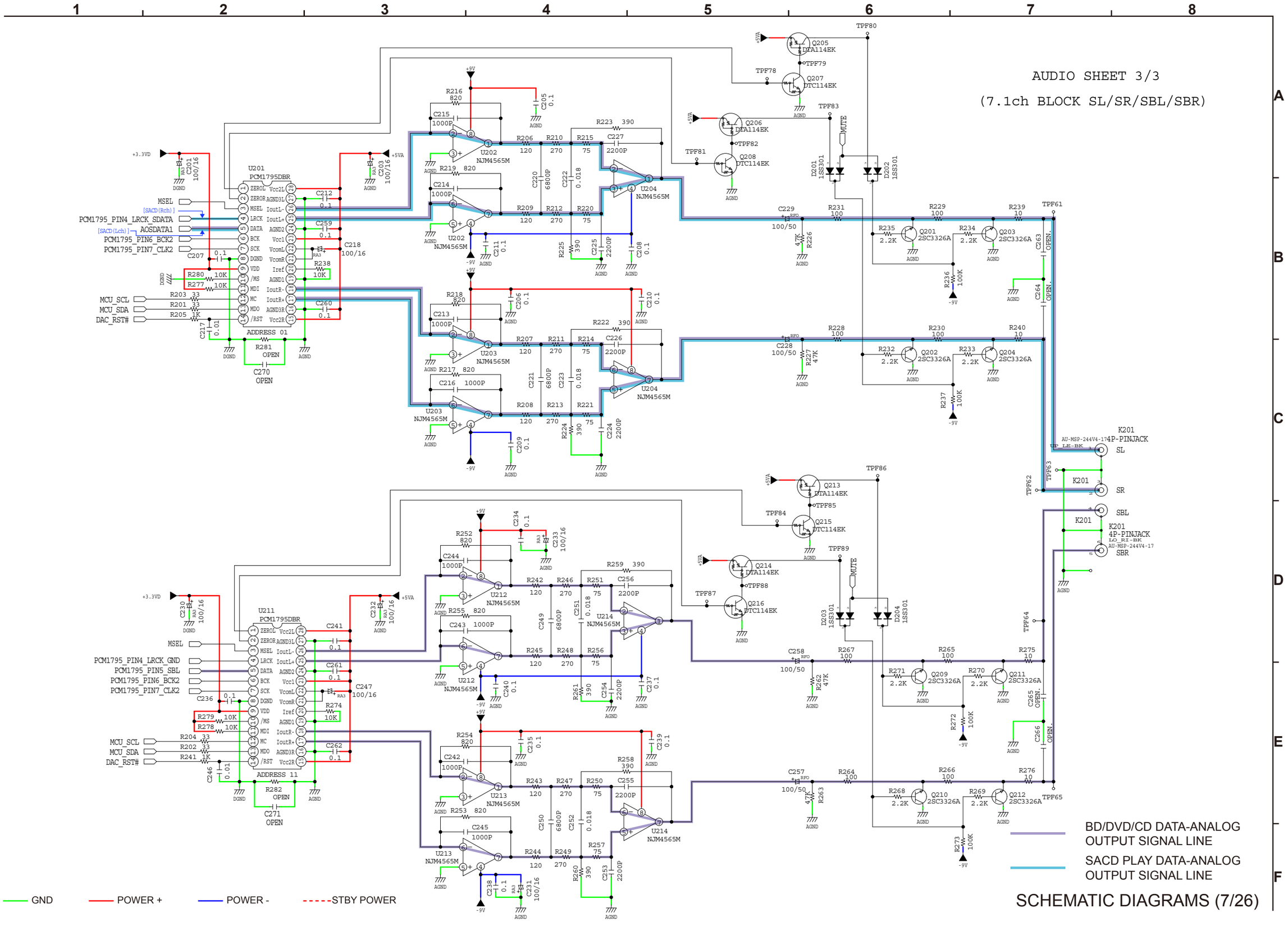

SCHEMATIC DIAGRAMS (7/26)

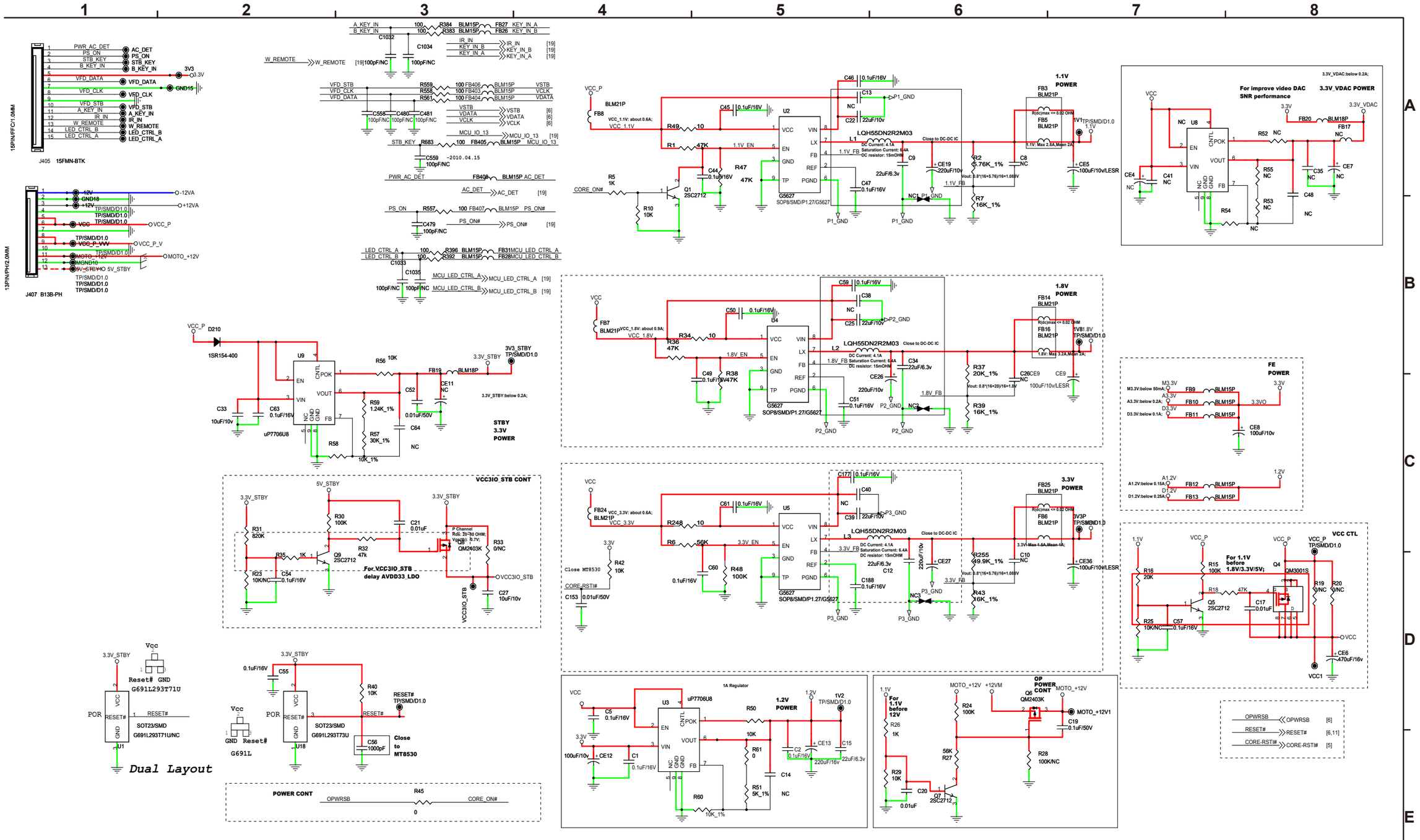

SCHEMATIC DIAGRAMS (8/26)

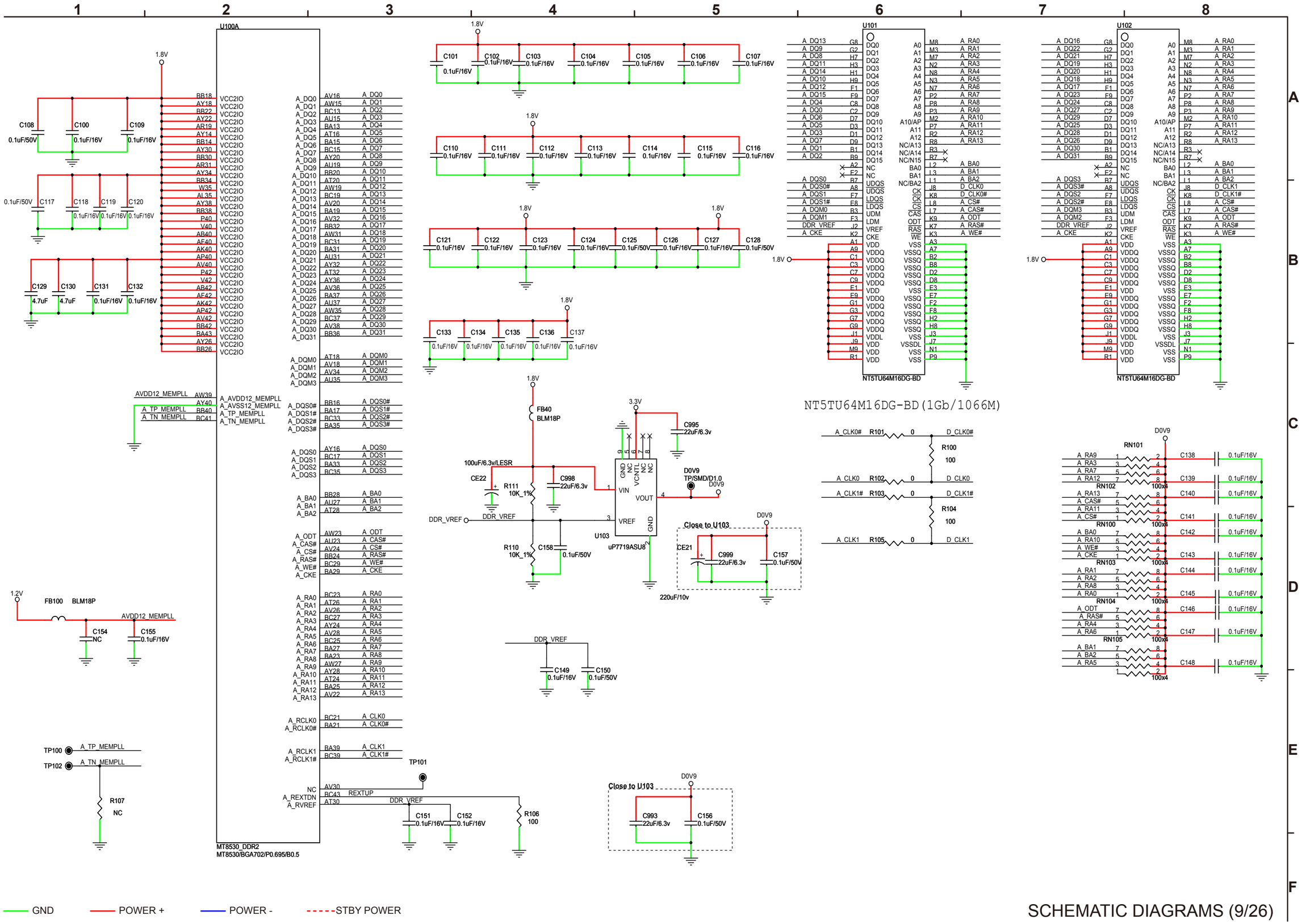

GND POWER + POWER - STBY POWER

SCHEMATIC DIAGRAMS (9/26)

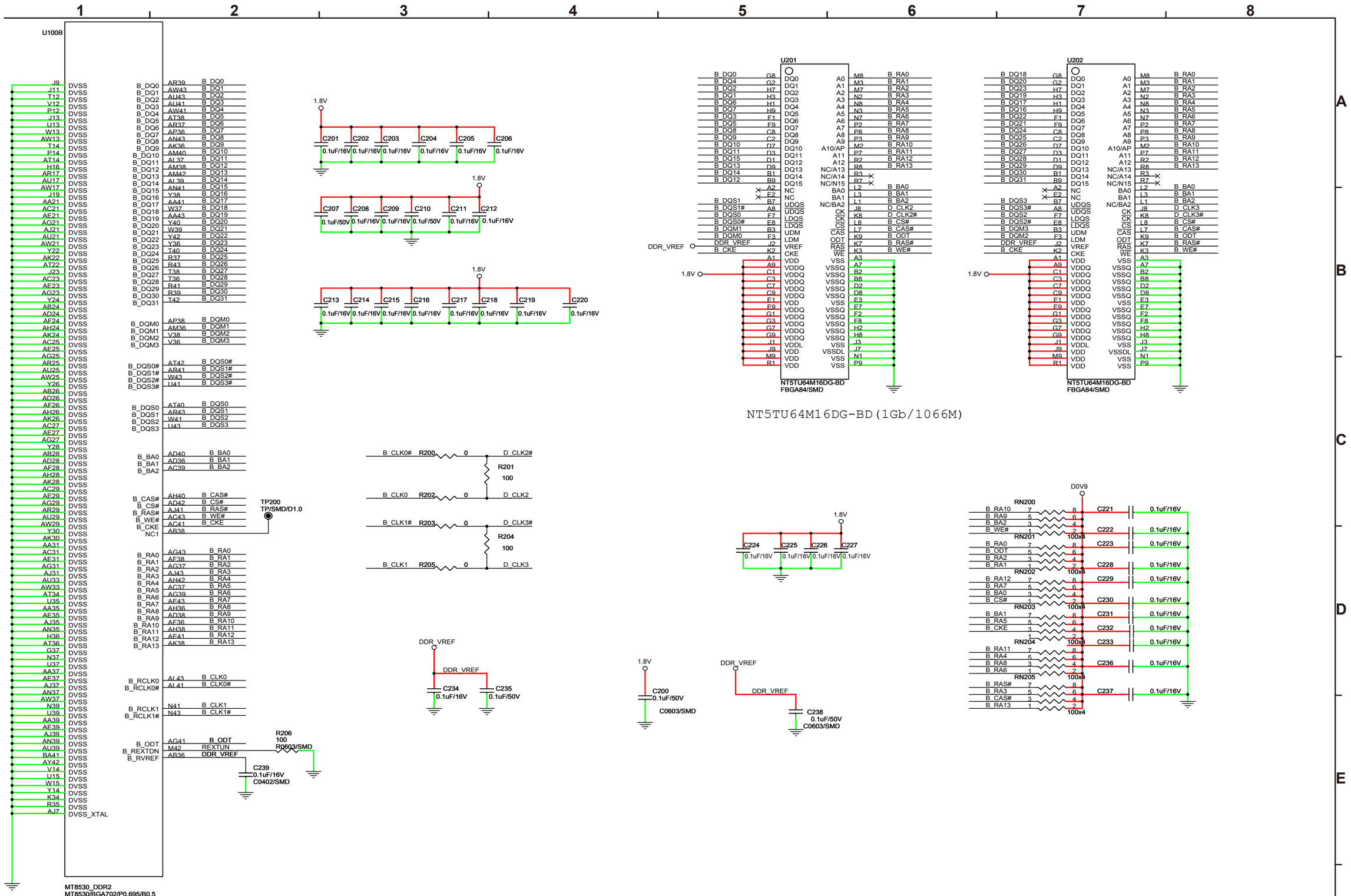

GND POWER + POWER - STBY POWER

SCHEMATIC DIAGRAMS (10/26)

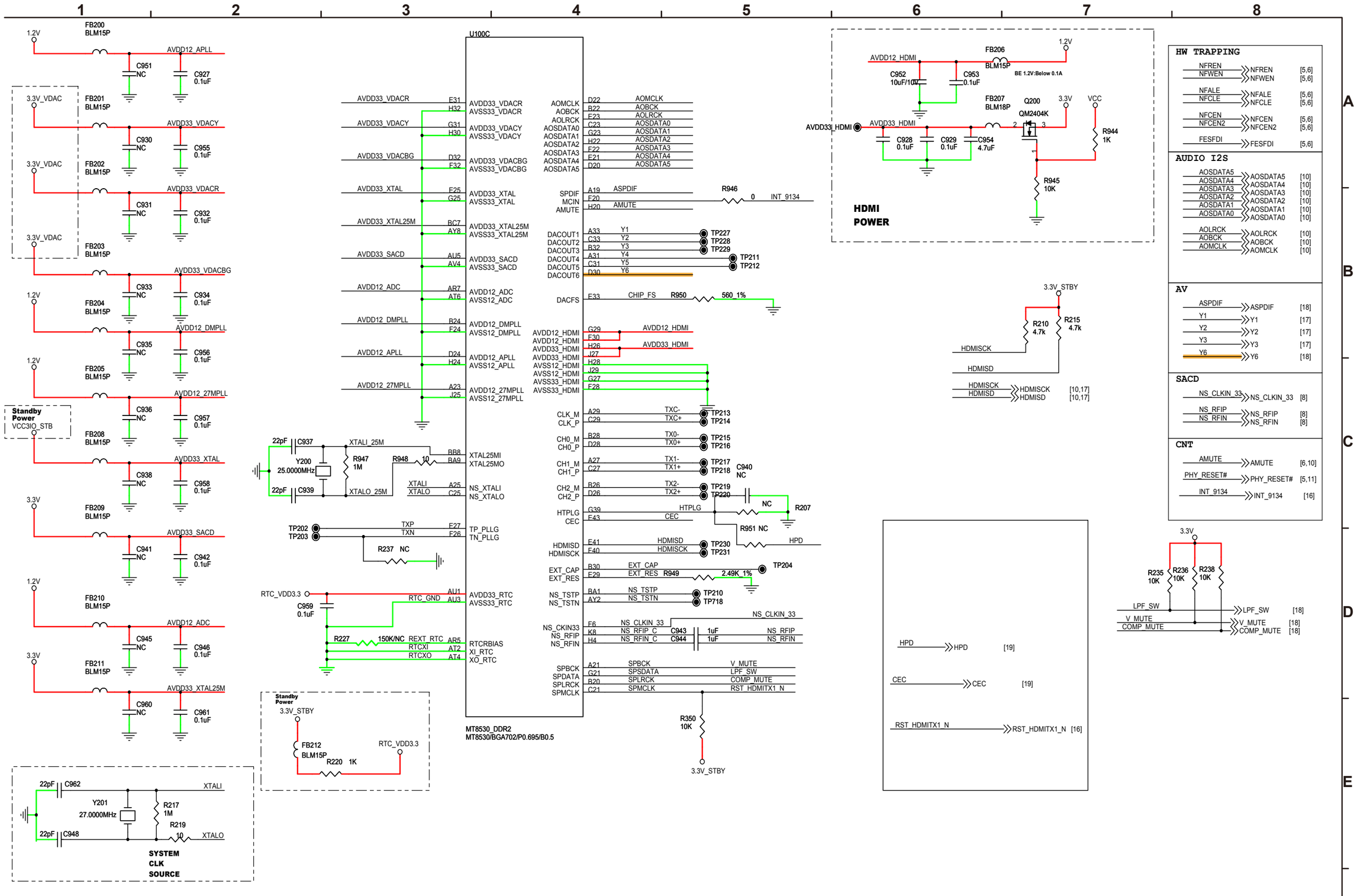

GND — POWER + — POWER - — STBY POWER

SCHEMATIC DIAGRAMS (11/26)

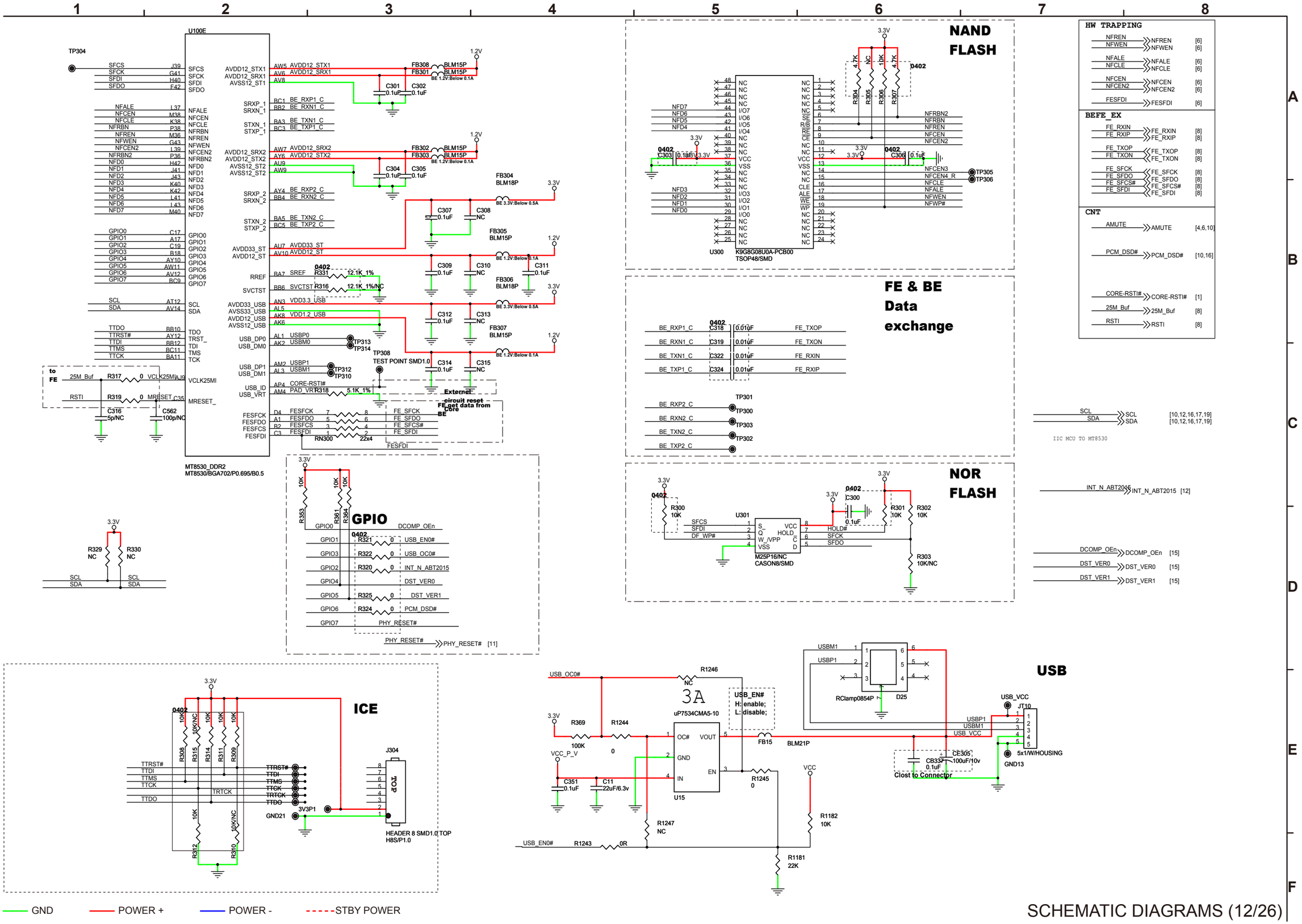

SCHEMATIC DIAGRAMS (12/26)

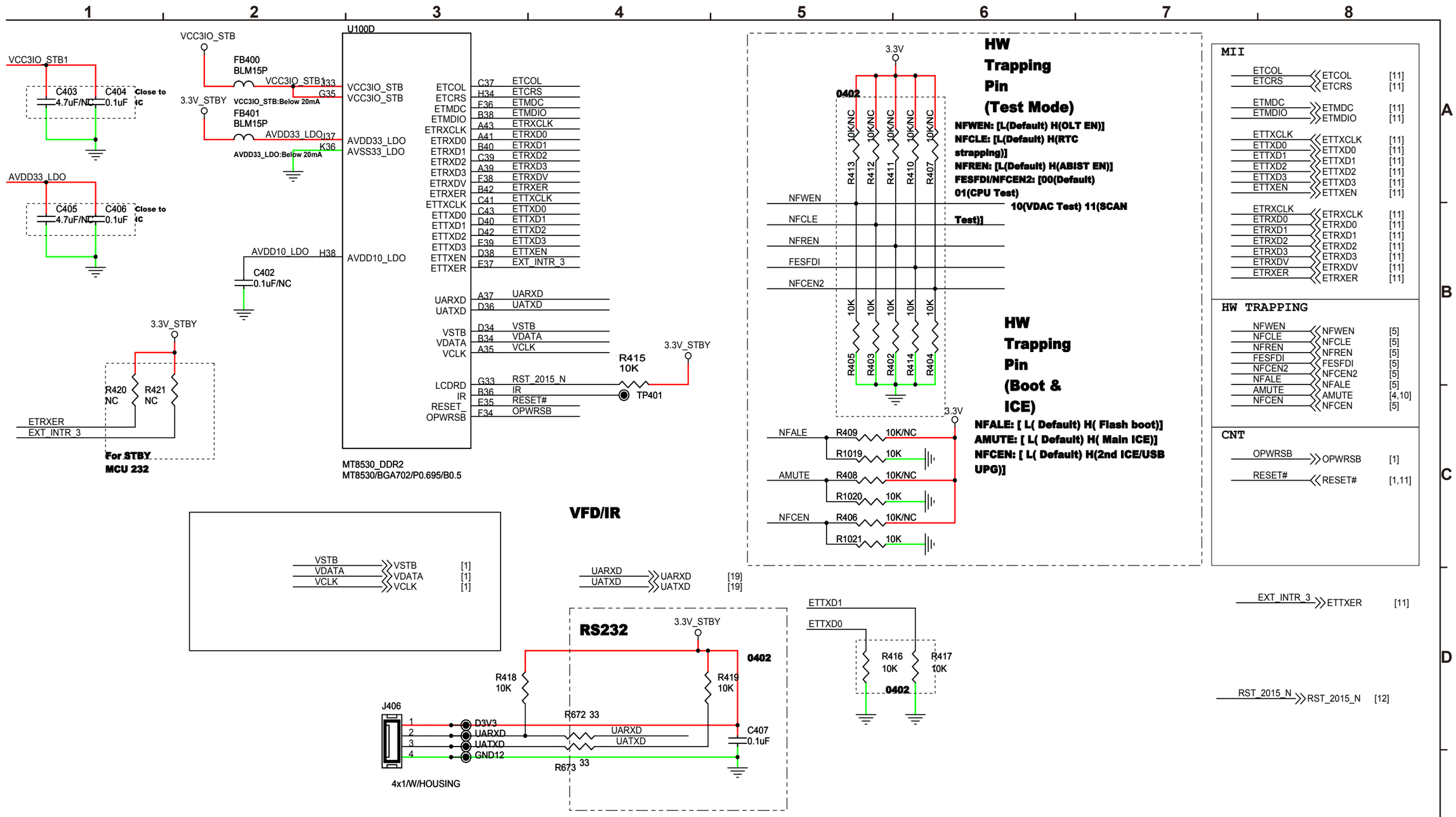

GND POWER + POWER - STBY POWER

SCHEMATIC DIAGRAMS (13/26)

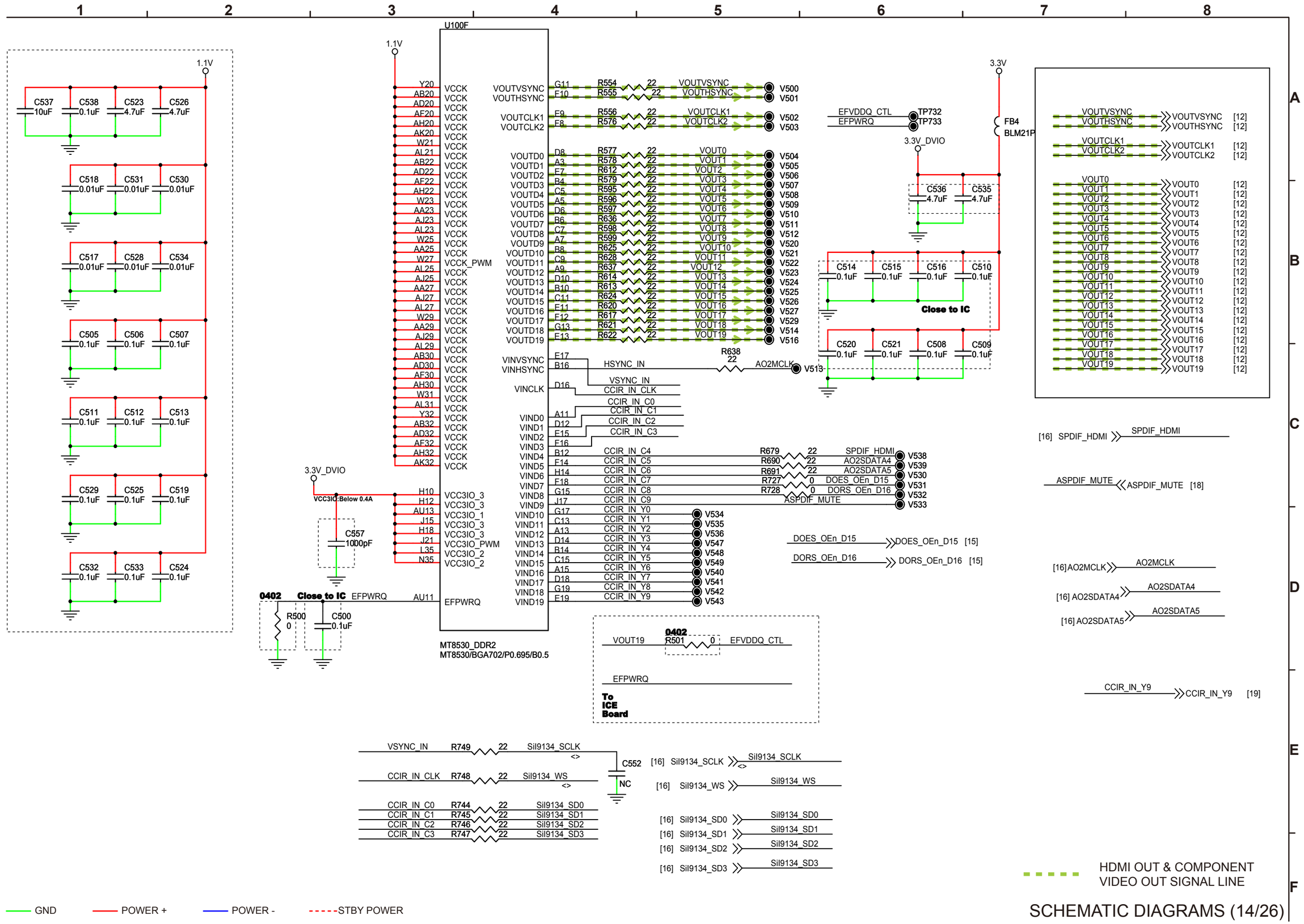

SCHEMATIC DIAGRAMS (14/26)

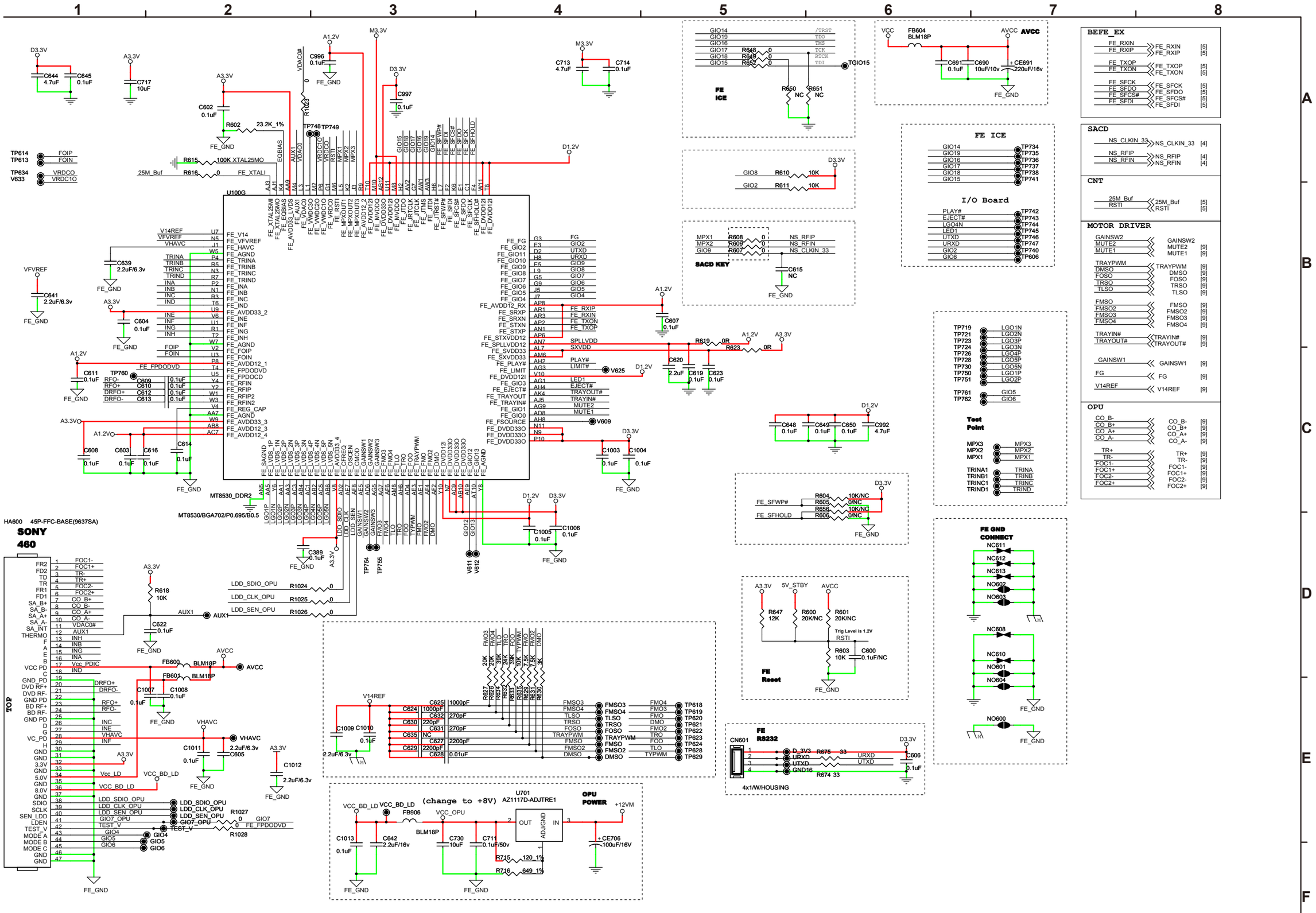

GND — POWER + — POWER - — STBY POWER

SCHEMATIC DIAGRAMS (15/26)

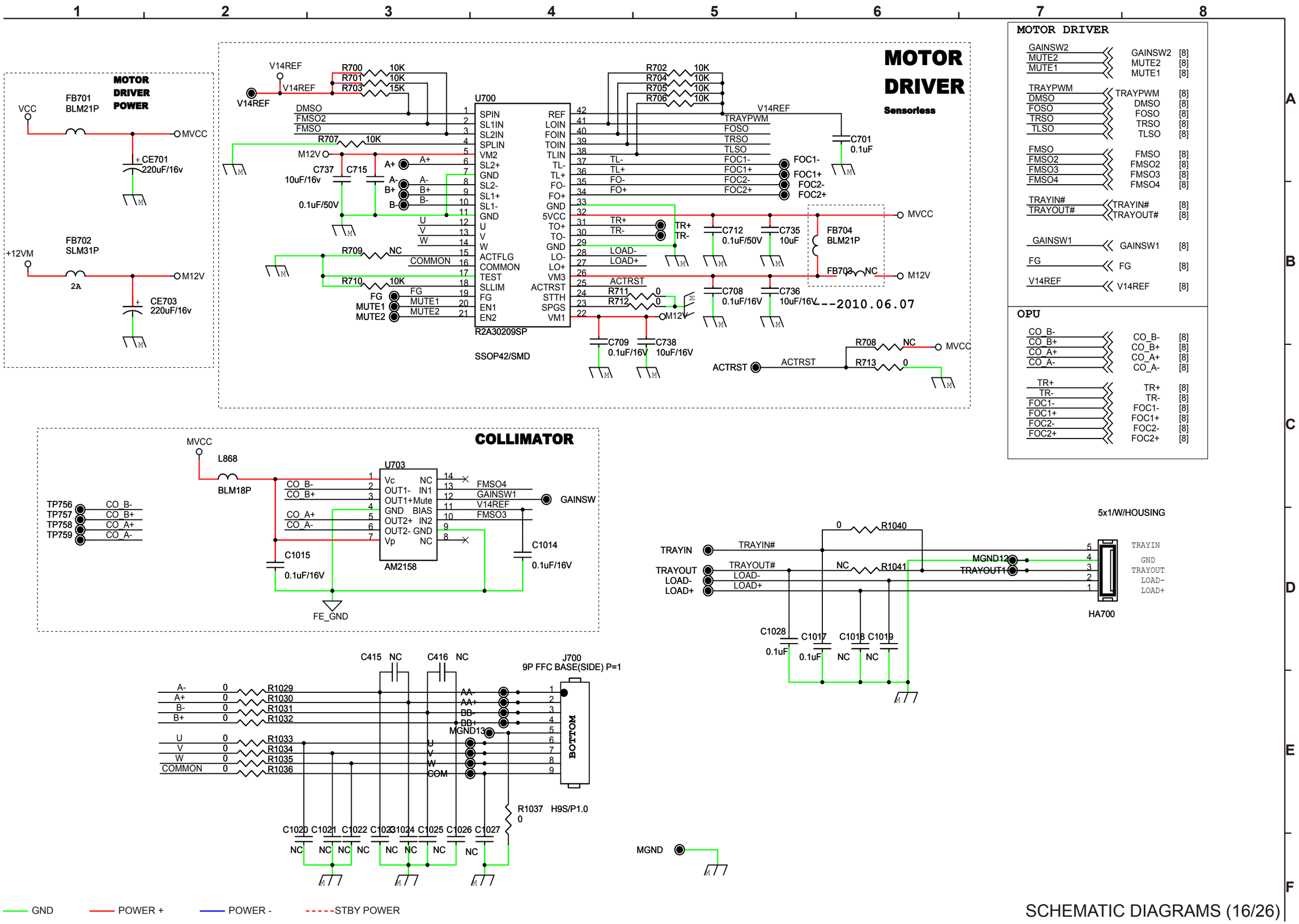

GND — POWER + — POWER - — STBY POWER

SCHEMATIC DIAGRAMS (16/26)

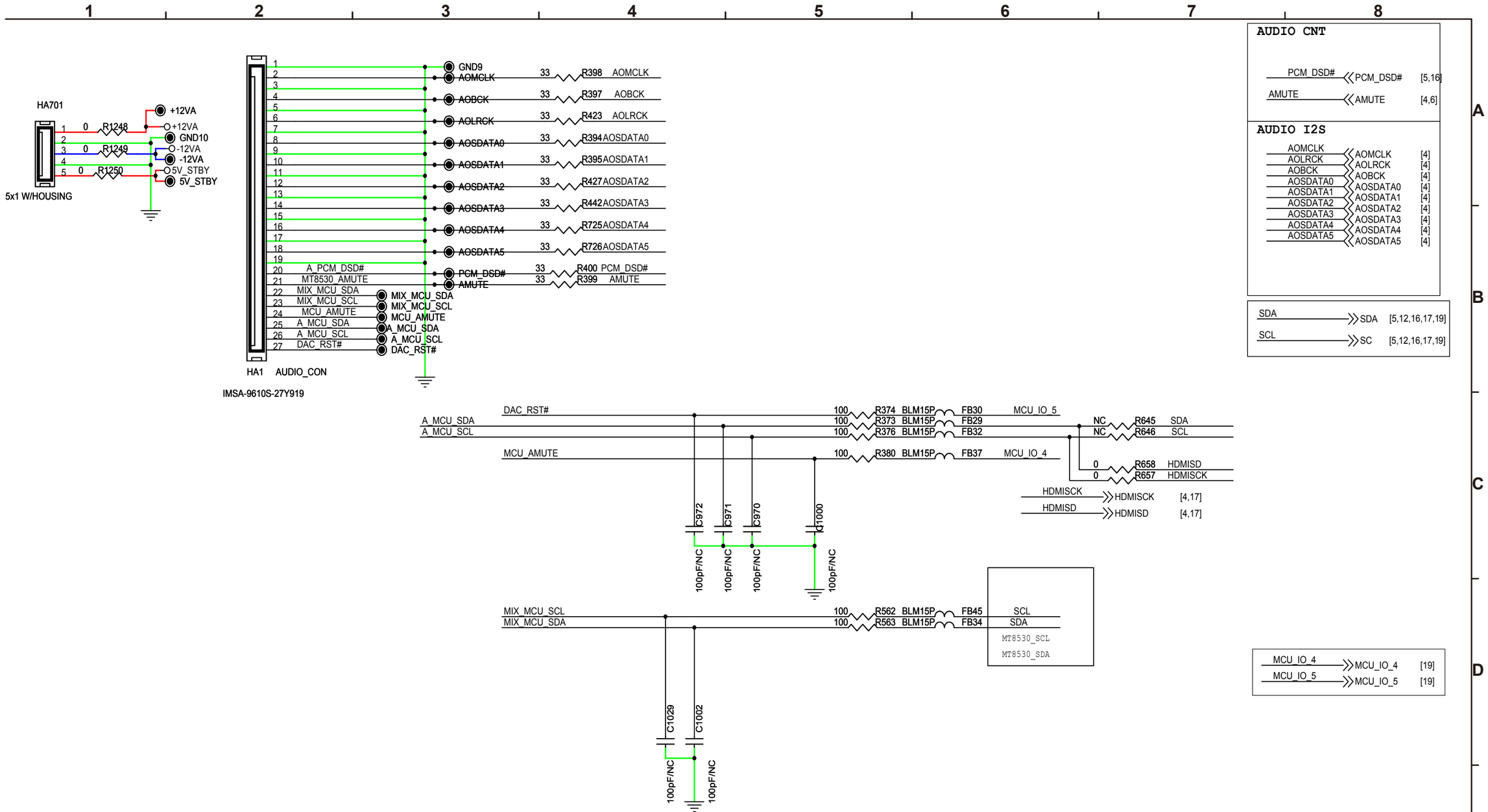

GND POWER + POWER - STBY POWER

SCHEMATIC DIAGRAMS (17/26)

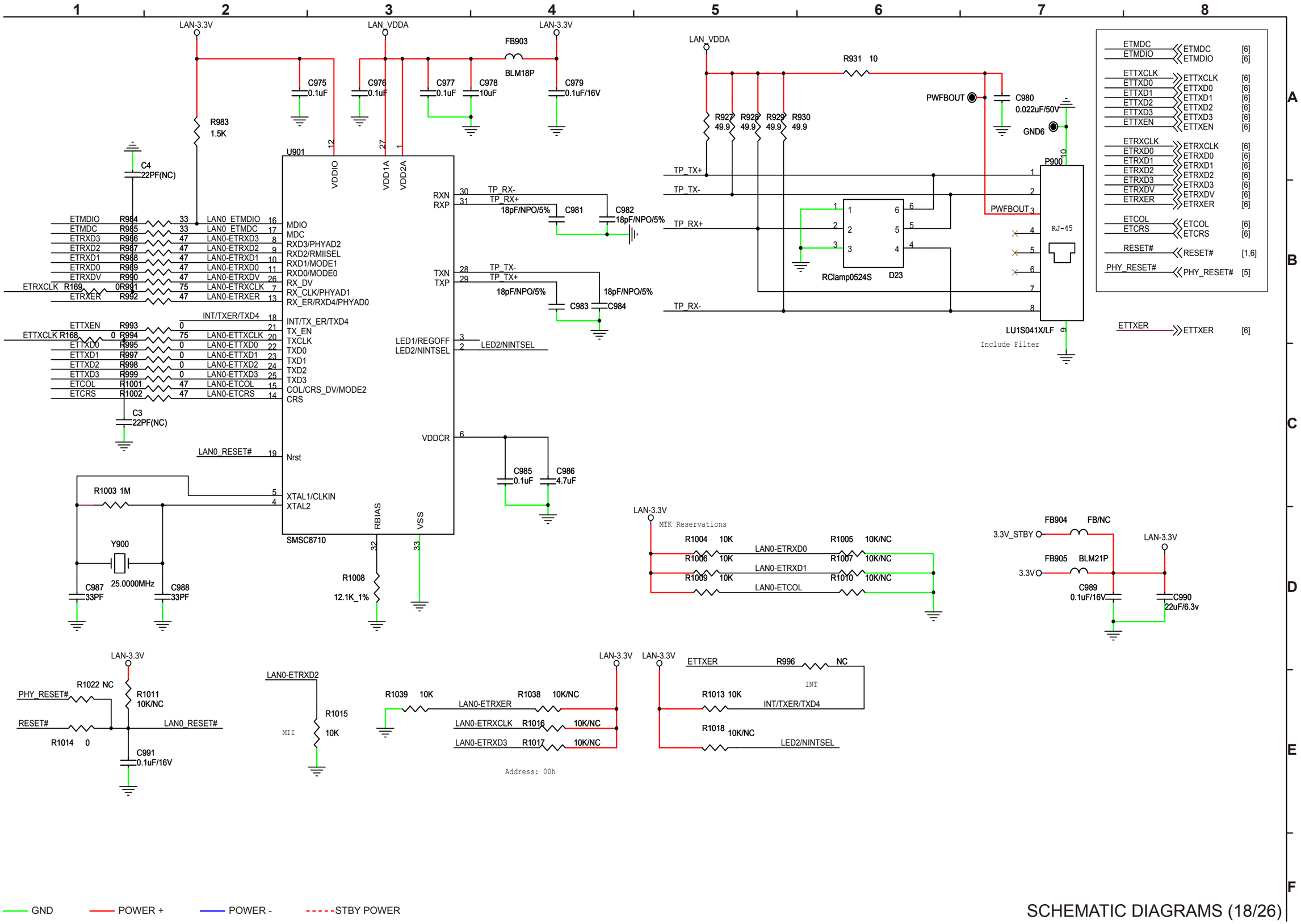

GND POWER + POWER - STBY POWER

SCHEMATIC DIAGRAMS (18/26)

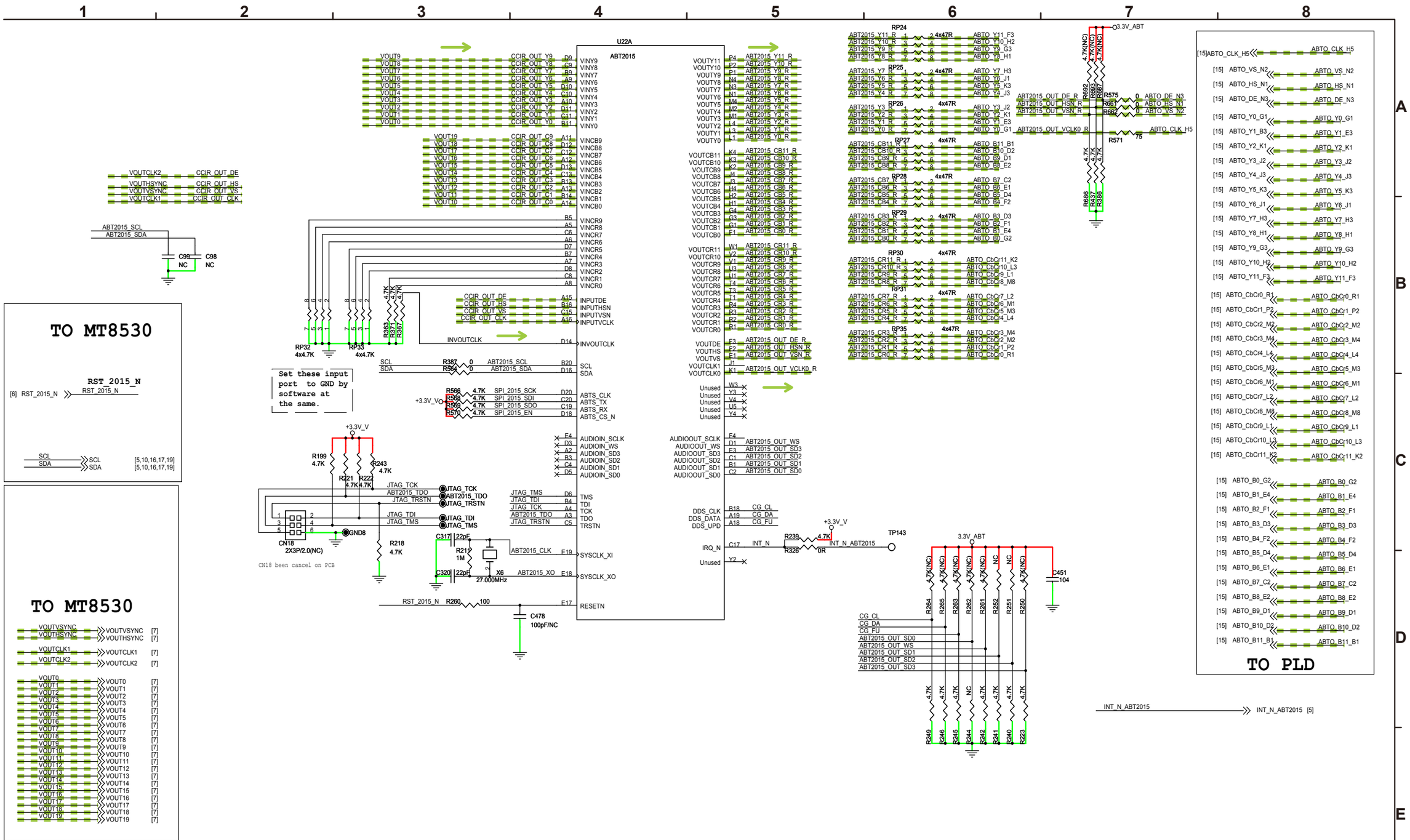

SCHEMATIC DIAGRAMS (19/26)

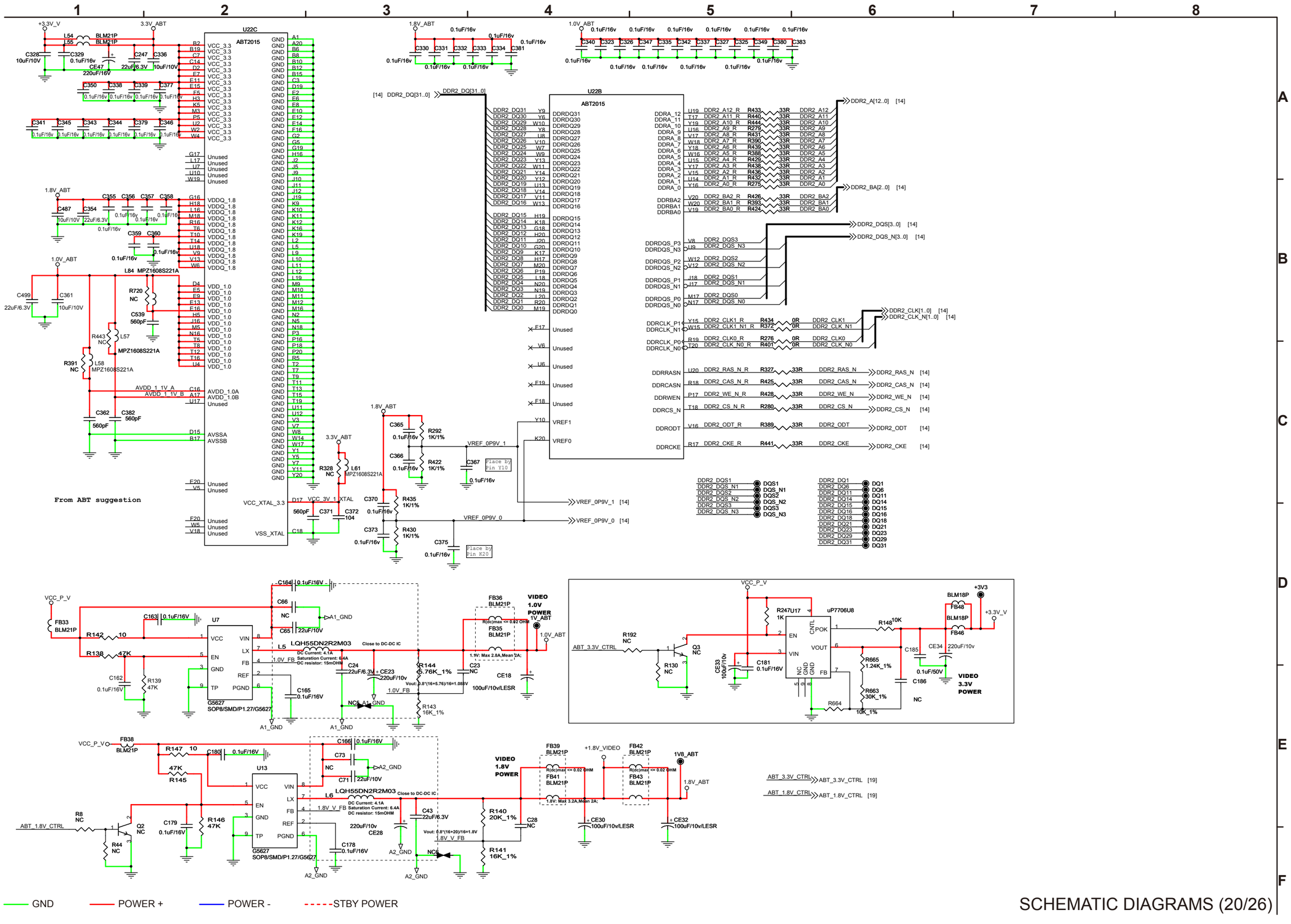

SCHEMATIC DIAGRAMS (20/26)

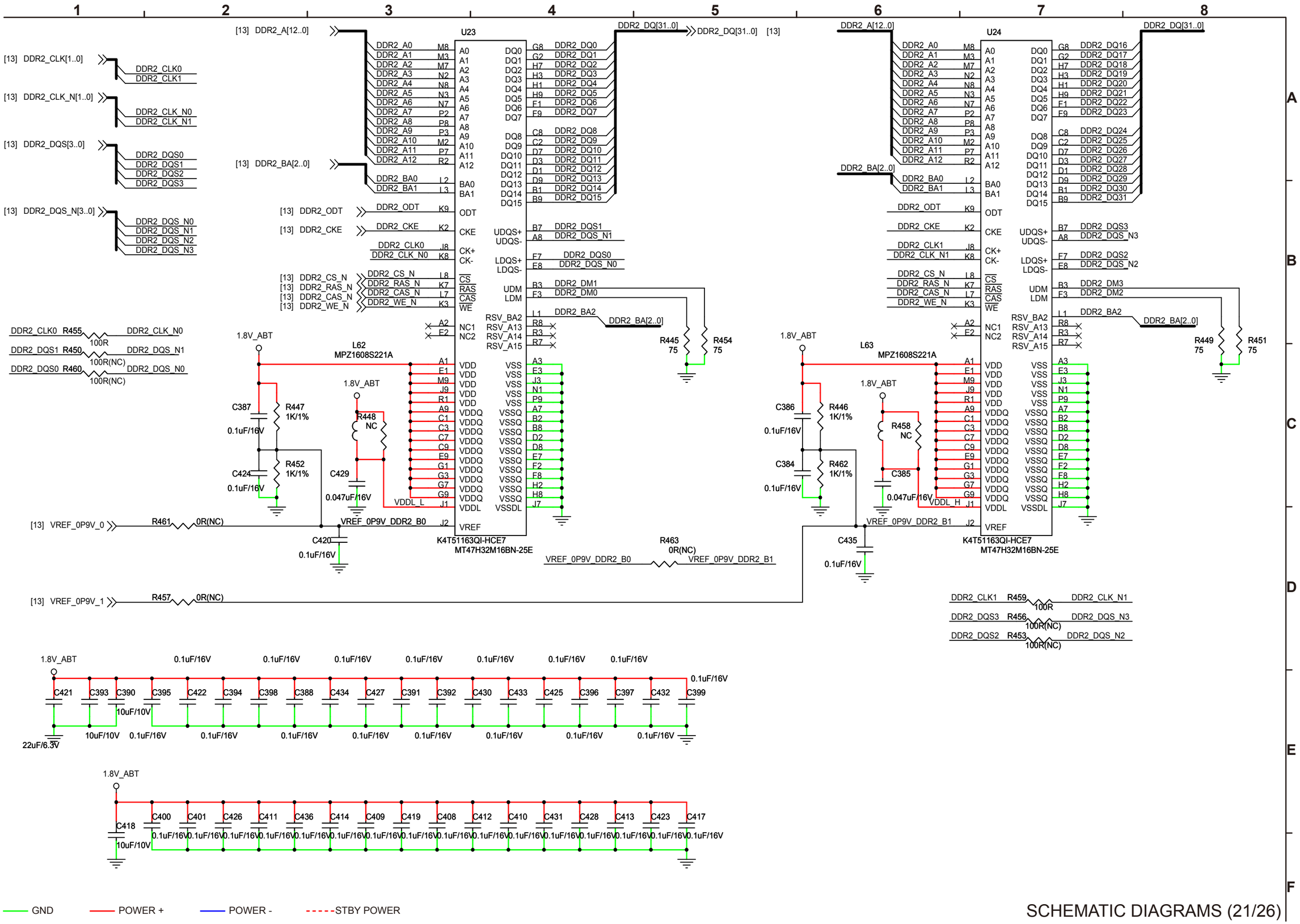

SCHEMATIC DIAGRAMS (21/26)

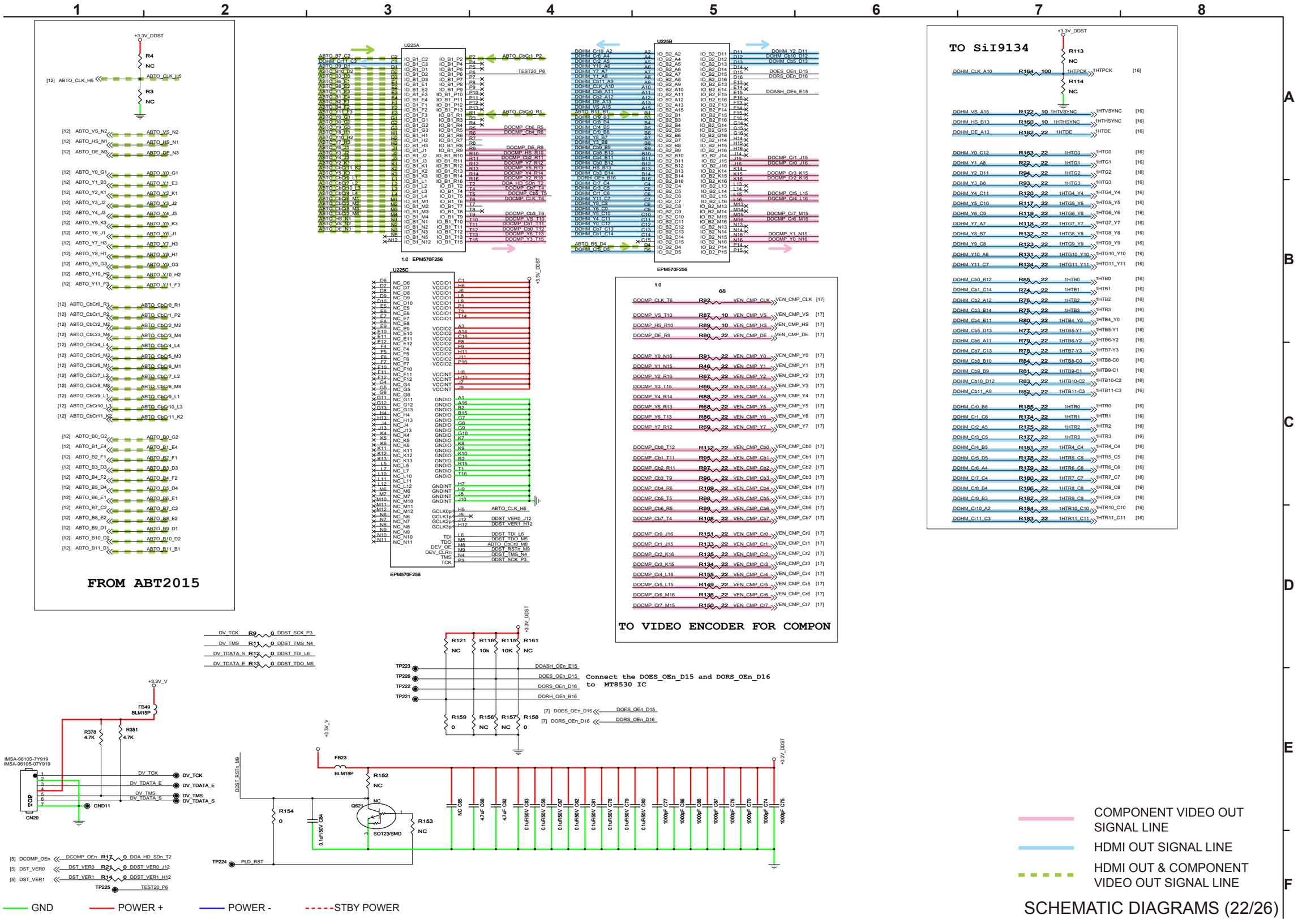

SCHEMATIC DIAGRAMS (22/26)

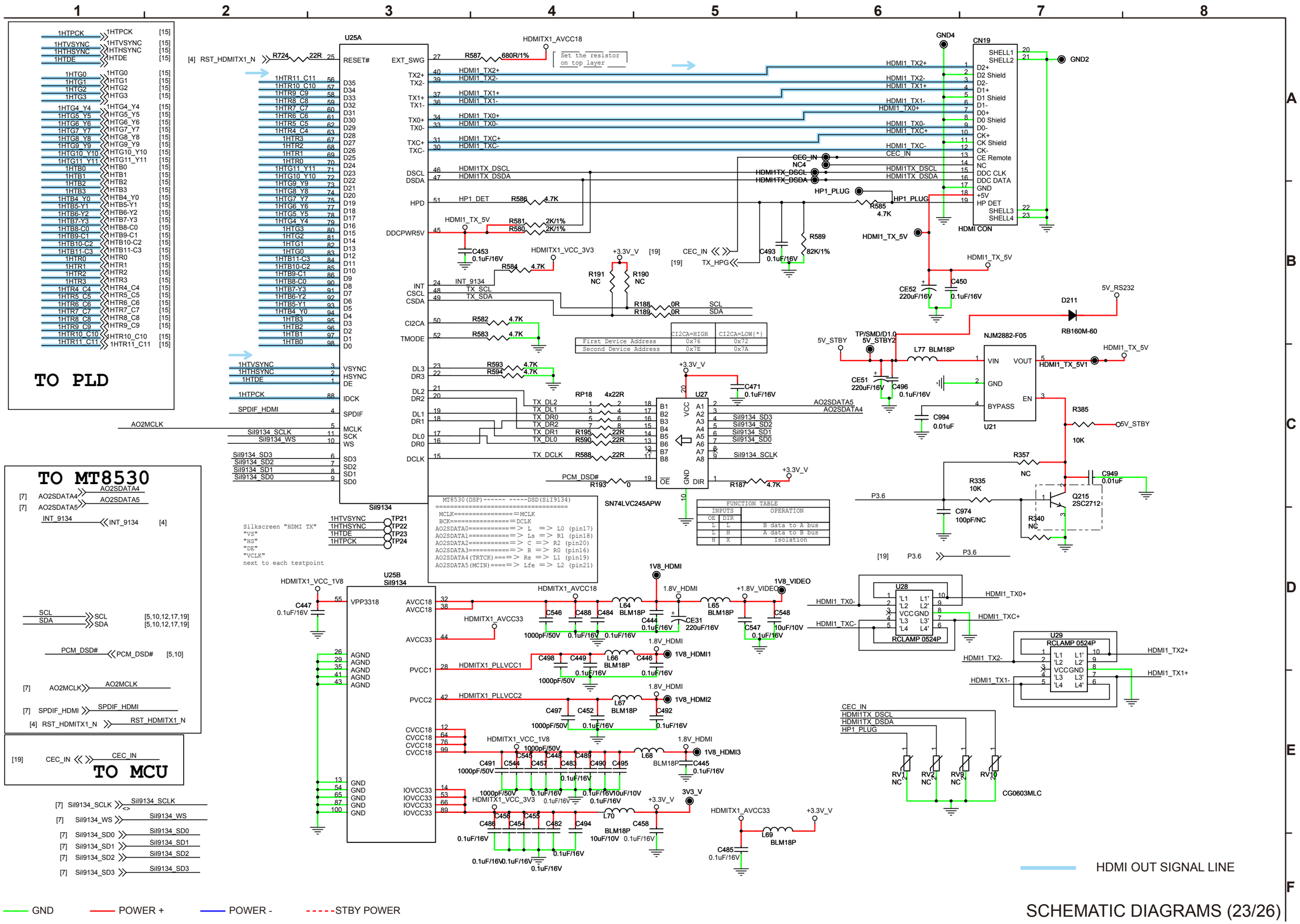

SCHEMATIC DIAGRAMS (23/26)

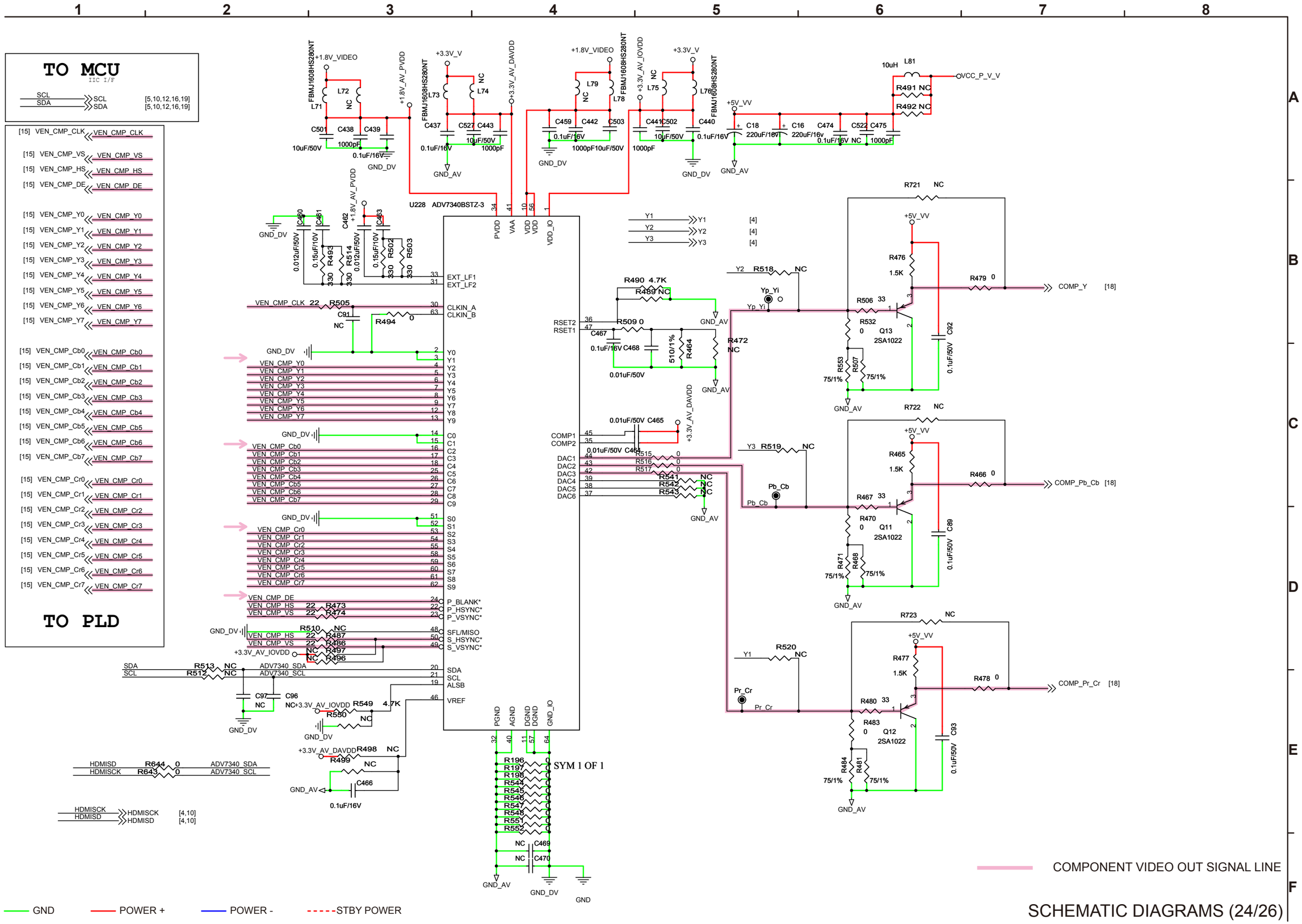

SCHEMATIC DIAGRAMS (24/26)

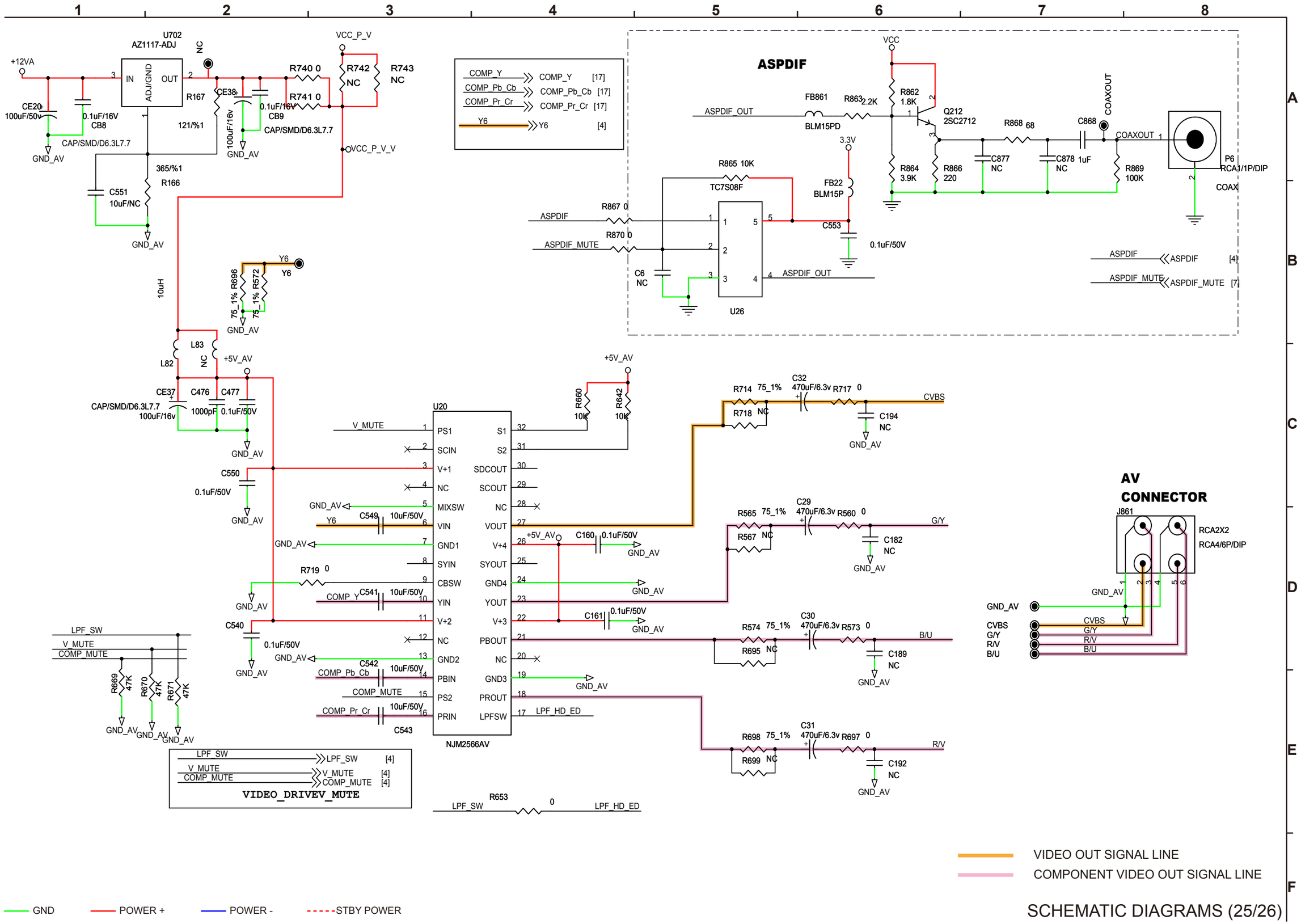

SCHEMATIC DIAGRAMS (25/26)

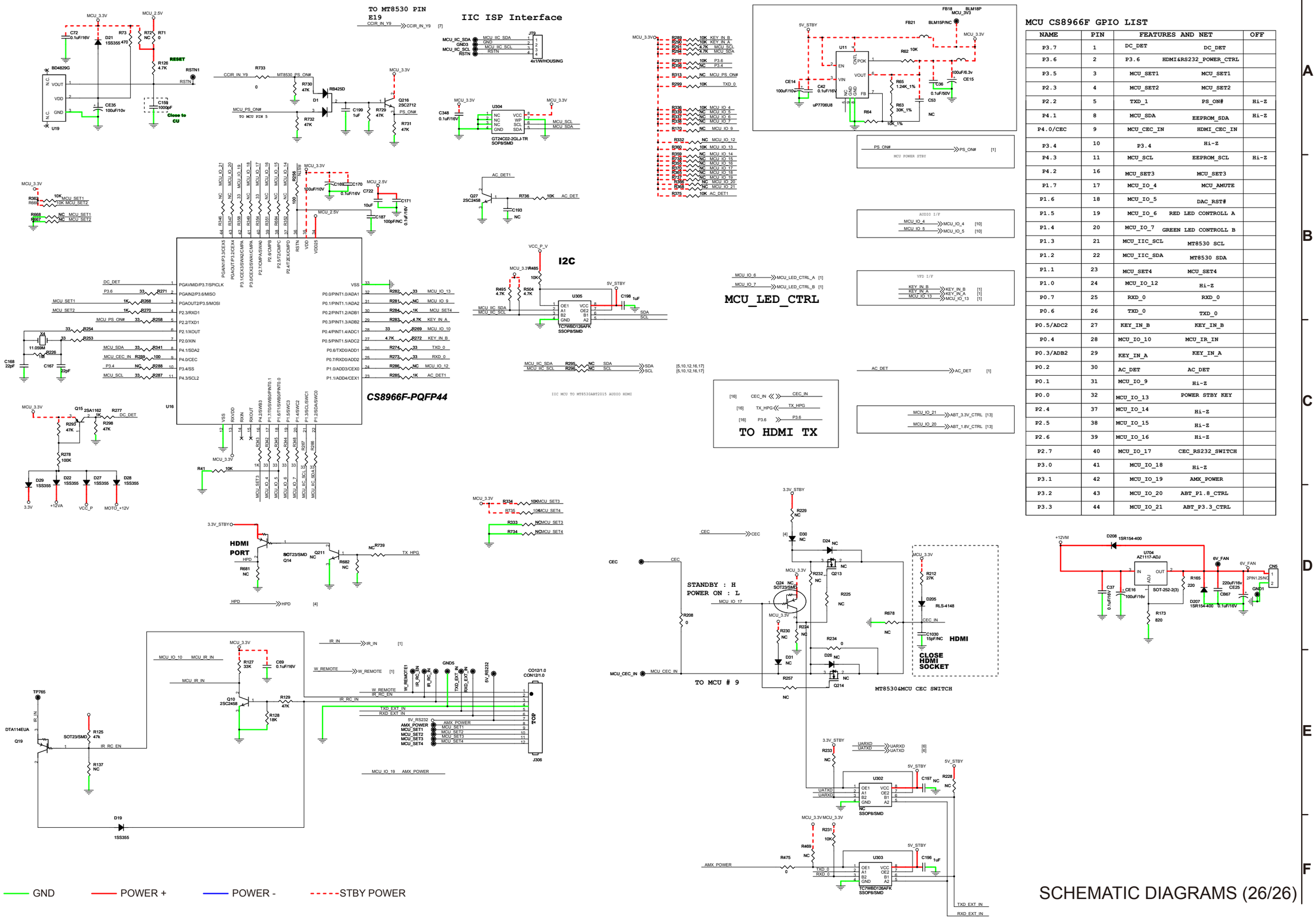

MCU CS8966F GPIO LIST

NAME	PIN	FEATURES AND NET		OFF
P3.7	1	DC_DET	DC_DET	
P3.6	2	P3.6	HDMI&RS232_POWER_CTRL	
P3.5	3	MCU_SET1	MCU_SET1	
P2.3	4	MCU_SET2	MCU_SET2	
P2.2	5	TXD_1	PS_ON#	Hi-Z
P4.1	8	MCU_SDA	EEPROM_SDA	Hi-Z
P4.0/CEC	9	MCU_CEC_IN	HDMI_CEC_IN	
P3.4	10	P3.4	Hi-Z	
P4.3	11	MCU_SCL	EEPROM_SCL	Hi-Z
P4.2	16	MCU_SET3	MCU_SET3	
P1.7	17	MCU_IO_4	MCU_AMUTE	
P1.6	18	MCU_IO_5	DAC_RST#	
P1.5	19	MCU_IO_6	RED LED CONTROLL A	
P1.4	20	MCU_IO_7	GREEN LED CONTROLL B	
P1.3	21	MCU_IIC_SCL	MT8530 SCL	
P1.2	22	MCU_IIC_SDA	MT8530 SDA	
P1.1	23	MCU_SET4	MCU_SET4	
P1.0	24	MCU_IO_12	Hi-Z	
P0.7	25	RXD_0	RXD_0	
P0.6	26	TXD_0	TXD_0	
P0.5/ADC2	27	KEY_IN_B	KEY_IN_B	
P0.4	28	MCU_IO_10	MCU_IR_IN	
P0.3/ADB2	29	KEY_IN_A	KEY_IN_A	
P0.2	30	AC_DET	AC_DET	
P0.1	31	MCU_IO_9	Hi-Z	
P0.0	32	MCU_IO_13	POWER STBY KEY	
P2.4	37	MCU_IO_14	Hi-Z	
P2.5	38	MCU_IO_15	Hi-Z	
P2.6	39	MCU_IO_16	Hi-Z	
P2.7	40	MCU_IO_17	CEC_RS232_SWITCH	
P3.0	41	MCU_IO_18	Hi-Z	
P3.1	42	MCU_IO_19	AMX_POWER	
P3.2	43	MCU_IO_20	ABT_P1.8_CTRL	
P3.3	44	MCU_IO_21	ABT_P3.3_CTRL	

SCHEMATIC DIAGRAMS (26/26)

EXPLODED VIEW ⚠4

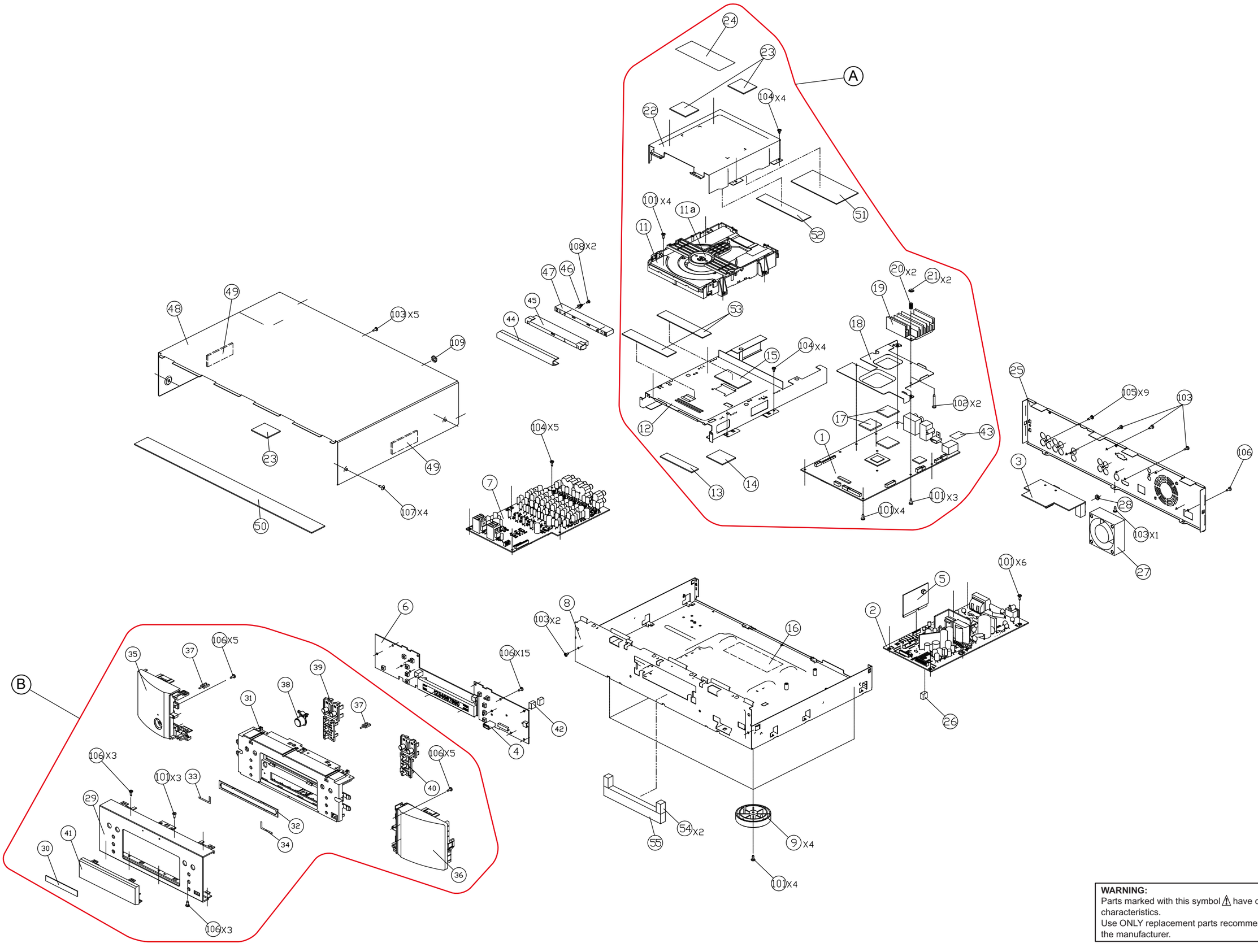

WARNING:
Parts marked with this symbol ⚠ have critical characteristics.
Use ONLY replacement parts recommended by the manufacturer.

Personal notes:

Personal notes:

PARTS LIST OF EXPLODED VIEW ⚠4

∗Parts indicated by "nsp" on this table cannot be supplied.
∗P.W.B. ASS'Y indicated by "nsp" on this table cannot be supplied. When repairing the P.W.B. ASS'Y, check the board parts list and order replacement parts.
∗Parts indicated by the " ★ " mark are not illustrated in the exploded view.
∗The parts listed below are only for maintenance. Therefore they might differ from the parts used in the unit in appearances or dimensions.

Note: The symbols in the column "Remarks" indicate the following destinations.
U : U.S.A. & Canada model N : Europe model S : Asia model
B : Black model SG : Silver Gold model

Ref. No.	Part No.	Part Name	Remarks		Q'ty	New
2A	963631100020M	POWER/IR/KEY PWB UNIT ASSY		7025HV1005041	1	*
2	nsp	POWER PWB UNIT				
3	nsp	IR PWB UNIT				
5	963633100040S	SUB POWER PWB UNIT ASSY		7025HV1004013	1	
6	972631000060M	DISPLAY PWB UNIT ASSY		7025HV1003212	1	⚠2
4	nsp	USB PWB UNIT				⚠5
7	972632000040S	AUDIO PWB UNIT ASSY		7025HV1004012	1	
8	nsp	CHASSIS		3200213776100S	1	
9	nsp	LEG		4007210651000S	4	
A	972304000530S	BD MAIN UNIT(UD7006)		7025HV1005010	1	
1	nsp	MAIN PWB UNIT		-	1	
11	963309100060S	BD MECHA UNIT ASSY		8038041679010S	1	
11a	45301003200AS	CLAMPER ASS'Y for BD MECHA (F-9332H)	MZ11-138	-	1	
★ 67	nsp	9P FFC(1.0)		N711091033810S	1	⚠2
12	nsp	MECHA BRACKET		4010215106100S	1	
13	nsp	DAMPER (60X10)		4050213415000S	1	
14	nsp	DAMPER (40X35)		4050213425000S	1	
15	nsp	DAMPER (75X35)		4050213435000S	2	
17	nsp	HEAT SHEET (25X25 T1.5)		1210211539000S	2	
18	nsp	HEAT SINK BRACKET		4010215176000S	1	
19	nsp	HEAT SINK		2120211958000S	1	
20	nsp	SPRING		3720210466000S	2	
21	nsp	FRANGE NUT-M3		1520210416000S	2	
22	nsp	MECHA COVER		4010215116000S	1	
23	nsp	DAMPER SHEET 50X40 CGX1A418Z		4050213445000S	2	
24	nsp	C1M LASER CAUTION		5507000004450S	1	
43	nsp	ALUMINUM TAPE	35mm	1220210978000S	1	
51	nsp	BUFFER 45x140x2t		-	1	
52	nsp	BUFFER 30x140x2t		-	1	
53	nsp	BUFFER 40x110x2t		-	2	
★ 68	963606501740S	FFC 45P 110MM 0.5MM AD		L301111450010S	1	⚠2 ⚠7
16	nsp	LICENSE LABEL		5507000005460S	1	
23	nsp	DAMPER SHEET 50X40 CGX1A418Z		4050213445000S	1	
25	nsp	REAR PANEL(7006/U)	U	3207213966000S	1	*
25	nsp	REAR PANEL(7006/NS)	N,S	3207213966010S	1	*

NOTE :
To replace the POWER PWB UNIT, attach the following parts before replacement, except the U model.

K101	972641000510S	AC INLET	N,S

NOTE :
To replace the IR PWB UNIT, please set a resistor according to 50 page of "Destination Setting". ⚠2

	Ref. No.	Part No.	Part Name	Remarks		Q'ty	New
	26	nsp	RUBBER SHEET (7X10X10.5)		4050213375000S	1	
	27	963685100020S	DC FAN (RDL6025S_60X60X25)		G720602504510S	1	
	B	972402000310M	FRONT PANEL ASSY(UD7006/B)	BK	-	1	*
	B	972402000330M	FRONT PANEL ASSY(UD7006/SG)	SG	-	1	*
	28	nsp	SPACER (D7.5X3.5XT1.0)		1530210302000S	1	
	29	nsp	FRONT PANEL(7006BK)	BK	3067215188100S	1	*
	29	nsp	FRONT PANEL(7006SG)	SG	3067215188120S	1	*
	30	nsp	MARANTZ BADGE (AL) FOR M1 MODEL		5630210678000S	1	
	31	nsp	INNER PANEL (5005BK) CENTER	BK	3067215151200S	1	
	31	nsp	INNER PANEL (5005SG) CENTER	SG	3067215151300S	1	
	32	nsp	BLIND SHEET(5005)		4050213389000S	1	
	33	nsp	GASKET SHEET (5005) LEFT		4400210629000S	1	
	34	nsp	GASKET SHEET (5005) RIGHT		4400210639000S	1	
	35	nsp	INNER PANEL (5005BK) LEFT	BK	3060215161200S	1	
	35	nsp	INNER PANEL (5005SG) LEFT	SG	3060215161300S	1	
	36	nsp	INNER PANEL (5005BK) RIGHT	BK	3060215171200S	1	
	36	nsp	INNER PANEL (5005SG) RIGHT	SG	3060215171300S	1	
	37	nsp	LENS (5005/POWER)		3710211131000S	2	
	38	nsp	POWER KNOB (5005BK)	BK	5097214631000S	1	
	38	nsp	POWER KNOB (5005SG)	SG	5097214631100S	1	
	39	nsp	KNOB 2P (5005BK)	BK	5097214641000S	2	
	39	nsp	KNOB 2P (5005SG)	SG	5097214641100S	2	
	40	nsp	KNOB 3P (5005BK)	BK	5097214651000S	2	
	40	nsp	KNOB 3P (5005SG)	SG	5097214651100S	2	
	41	nsp	WINDOW (5005)		5077214631000S	1	
	42	nsp	EMIGASKET NLCG100100		4400210619000S	1	
	44	418410024006M	LOADER ESC (5005BK)	BK	4317215358000S	1	
	44	418410024013M	LOADER ESC (5005SG)	SG	4317215358100S	1	
	45	418510025008M	LOADER PANEL (5005BK)	BK	3217212161000S	1	
	45	418510025015M	LOADER PANEL (5005SG)	SG	3217212161100S	1	
	46	nsp	L/P SPRING		3720210456000S	2	
	47	418510022009D	LOADER BASE (1611BK)	BK	3217212151000S	1	
	47	418510022016D	LOADER BASE (1611SP)	SG	3217212151100S	1	
	48	972403000450S	TOP COVER (BK)	BK	3007211856000S	1	
	48	972403000460S	TOP COVER (SP)	SG	3007211856100S	1	
	49	nsp	PEF SHEET (15X50XT3.0)		4050213395000S	2	
	50	nsp	BUFFER		-	1	
	54	nsp	BUFFER 20x40x10t		-	2	
	55	nsp	BUFFER 20x180x10t		-	1	
	★ 56	47401000200AS	MECHA DAMPER		-	4	
SCREW							
	101	nsp	3X8 CBTS (S)-B		B020930083B10S	24	
	102	nsp	SPECIAL SCREW		1500210606000S	2	
	103	nsp	3X6 CBTS(S)-B		B020930063B10S	11	
	104	nsp	3X6 CPTS (S) ROUND		1500210646000S	13	
	105	nsp	FIXING SCREW		B020030103B11S	9	
	106	nsp	SCREW		B020030083P10S	32	
	107	nsp	3P. SWELLING SCREW BK	BK	1500210636000S	4	
	107	nsp	3P. SWELLING SCREW SP	SG	1500210636100S	4	
	108	nsp	SPECIAL SCREW		1500210626000S	2	
	109	nsp	TOOTHED WASHER		1530210126000S	1	

	Ref. No.	Part No.	Part Name	Remarks		Q'ty	New	
WIRES								
	★ 60	00MYU12090520	12P FFC		N711120833810S	1		⚠2
	★ 61	00MYU15080520	15P FFC		N711150833810S	1		⚠2
	★ 62	nsp	5P CON.		L002261050050S	1		⚠2
	★ 63	nsp	13P CON.		L002201130050S	1		⚠2
	★ 64	00MYU20100520	20P FFC		N711201033810S	1		⚠2
	★ 65	00D0090252062	27P FFC		N711270933810S	1		⚠2
	★ 66	nsp	5P CON.		L000131051210S	1		⚠2

PARTS LIST OF P.W.B. UNIT

	Ref. No.	Part No.	Part Name	Remarks		Q'ty	New	
MAIN PWB UNIT ASSY : Ref.No. 1								
	CN19	972646000100S	HDMI CONNECTOR (WHDM-19D3L1BI3U4)		L109101905510S	1	*	⚠2
	J861	972646000150S	() 4P PIN JACK (RCA2X2 GOLD DIP)		G602210040000S	1	*	⚠2
	P6	972646000140S	COAX Connector		G600210030000S	1	*	⚠2
	P900	972646000090S	ETHERNET TERM.		G4060RJ455510S	1	*	⚠2
POWER/IR/KEY PWB UNIT ASSY :Ref.No. 2A								
POWER PWB UNIT :Ref.No. 2								
⚠	F101	972652000210S	FUSE (L=21.5mm F2AH/250V) (EY. 0109-A-D)		G650202255510S	1	*	⚠2
⚠	K101	972641000080S	AC INLET (AC-M34U)	U	G430341535510S	1	*	⚠2
⚠	K101	972641000510S	AC INLET (AC-M34)	N,S,K,R	G430040600020S	1	*	⚠2
⚠	T101	972102000220S	SW_TRANS (AEP-ERL28075) (ET. 0021-A-D)		8200380285020S	1	*	⚠2
IR PWB UNIT: Ref.No. 3								
	K201	00D2051305008	9P D-SUB CONNECTOR		L103090090030S	1		⚠2
	K202	972646000190M	2P RCA JACK MSP-242V1-24 NI FE-ABS(S191)		G601242V1240MS	1	*	⚠2
	K203	00D2048729008	2P MINI JACK HSJ1003-016010WA		G401HSJI05500S	1		⚠2
	S201	664010012008S	SWS-A SLIDE SWITCH		G060040110110S	1	*	⚠2
DISPLAY PWB UNIT ASSY :Ref.No. 6								
	USB1	972646000130S	USB Connector		G480250045510S	1	*	⚠2
AUDIO PWB UNIT ASSY :Ref.No. 7								
	K1	972646000160S	() RCA PIN JACK 2P AU MSP-242V3-12 GILT LF		G601242V3120MS	1		⚠2
	K101,K201	972646000170S	() RCA PIN JACK 4P AU MSP-244V4-17 GILT LF		G602244V4170MS	2		⚠2

PACKING VIEW

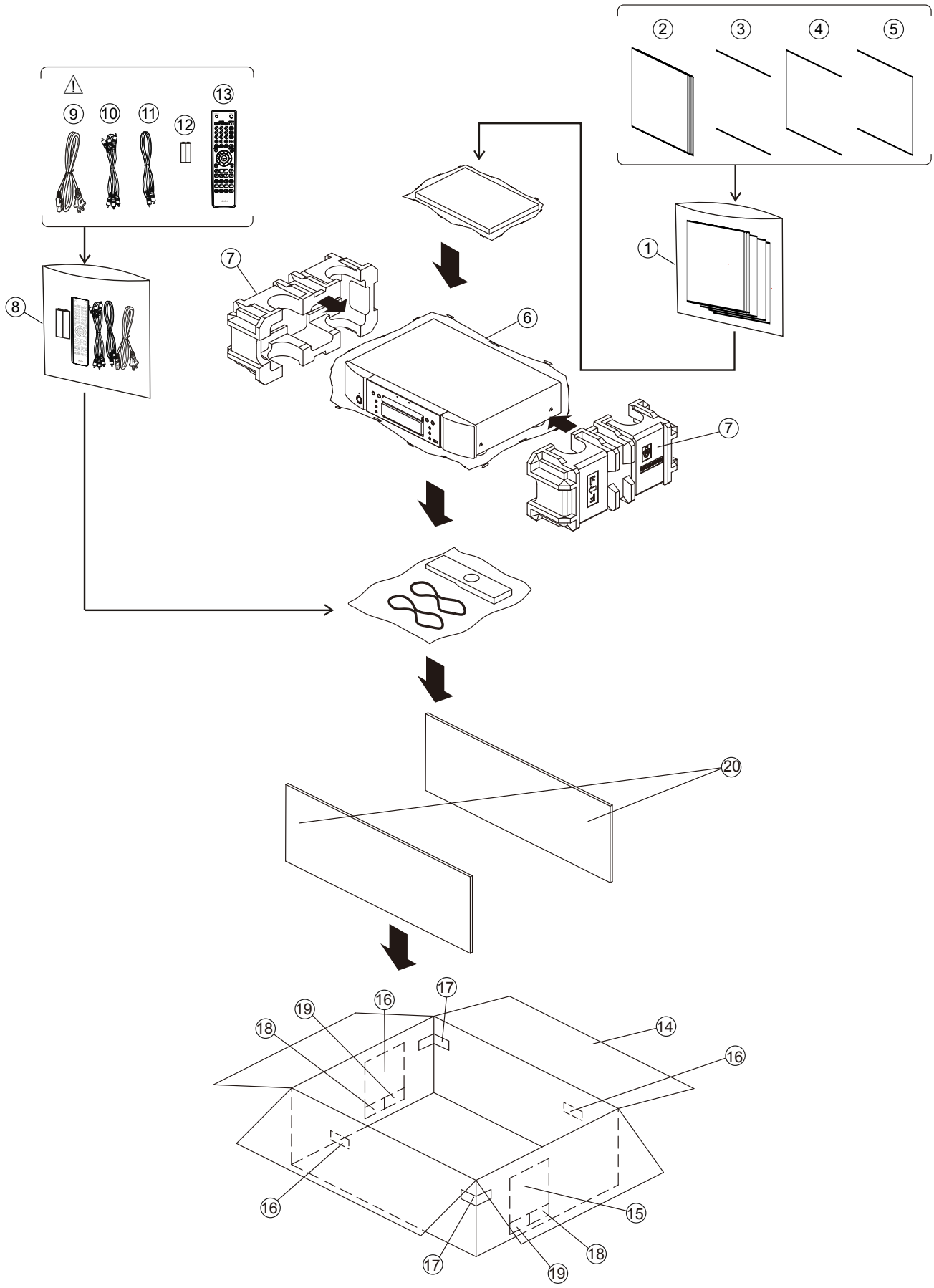

PARTS LIST OF PACKING VIEW

∗Parts indicated by "nsp" on this table cannot be supplied.
∗Parts indicated by the " ★ " mark are not illustrated in the exploded view.
∗The parts listed below are only for maintenance. Therefore they might differ from the parts used in the unit in appearances or dimensions.

Note: The symbols in the column "Remarks" indicate the following destinations.
U : U.S.A. & Canada model N : Europe model S : Asia model
B : Black model SG : Silver Gold model

	Ref. No.	Part No.	Part Name	Remarks		Q'ty	New	
	1	nsp	ENVELOPE		6337040062010S	1		
	2	541110474009M	USER GUIDE(UD7006/U)	U	5707000005430S	1	*	⚠2
	2	541110475002M	USER GUIDE(UD7006/N)	N	5707000005440S	1	*	⚠2
	2	541110478001M	USER GUIDE(UD7006/S)	S	5707000005450S	1	*	⚠2
	3	nsp	WARRANTY USA	U	5727000000111S	1		
	4	nsp	WARRANTY CANADA	U	5727041650142S	1		
	5	nsp	ADDENDUM SHEET(UPDATE_YOUTUBE)		5227000001880S	1		
	6	nsp	CABINET COVER		6327040022012S	1		
	7	972532000480M	CUSHION (5005) -L, R		6230212994000S	1		
	8	nsp	POLY COVER		6337040062010S	1		
⚠	9	972611000410S	AC CORD 2000mm UL 7A 125V	U	L068125075550S	1		
⚠	9	972611000420S	AC CORD 1500mm CB 2.5A 250V	N,S	L068250250440S	1		⚠2
	10	nsp	YAF11-0745N 3PIN RCA (VIDEO&L/R) 1.5M		L063152030020S	1		⚠2
	11	nsp	TWIN SHIELDED WIRE WITH RCA PLUGS		L063102010110S	1		⚠2
	12	nsp	BATTERY(R03X2)		G670001R50220S	1		⚠2
	13	307010078008M	RC005UD REMOCON UNIT C.G.DEVELOPMENT		8300005000010S	1		
	14	972531000390M	CARTON CASE (UD7006)		6007211830050S	1		⚠2
	15	nsp	CONT. LABEL (7006/U1B) SUB ASSY	U1B	5507000007500S	1	*	
	15	nsp	CONT. LABEL (7006/N1B) SUB ASSY	N1B	5507000007500S	1	*	
	15	nsp	CONT. LABEL (7006/N1SG) SUB ASSY	N1SG	5507000007500S	1	*	
	15	nsp	CONT. LABEL (7006/S1B) SUB ASSY	S1B	5507000007500S	1	*	
	16	nsp	LABEL(NETFLIX)	U	5507000005540S	2		
	17	nsp	LABEL FOR PKG SG	N1SG,S1SG	5507000004600S	2		
	18	nsp	GOST_LABEL(CARTON)	N	5507000005560S	2	*	
	19	nsp	LABEL(GOST_MZ)	N	5507000005850S	2	*	
	20	nsp	PARTITION_BOARD		6240210960000S	2	*	

SEMICONDUCTORS

Only major semiconductors are shown. Genaral semiconductors etc. are omitted from list.
The semiconductors which have a detailed drawing in a schematic diagram are omitted from list.

1. IC's

CS8966-PQFP44 (MAIN UNIT : U16)

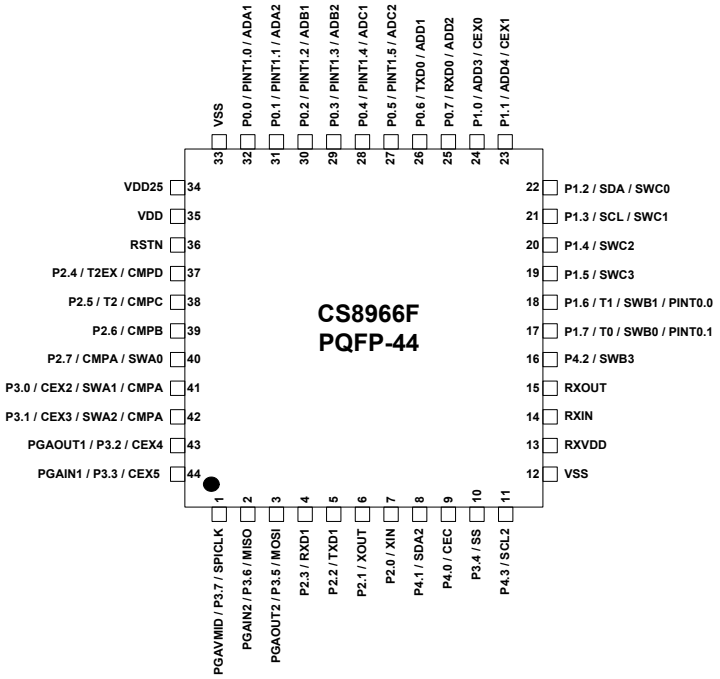

Terminal Function

Pin	Port Name	Assignment Function	I/O Port Definition			PU/PD	Function Description
			I/O	Normal	OFF		
1	P3.7	DC_DET	I	Low(0V)	High(3.3V)	47k PD	Detection signal is for DC short circuit(3.3V;+5V and +12V). It only work in power-on mode.
2	P3.6	HDMI_POWER_CTRL	O	Low(0V)	High(3.3V)	10k PU	Power enable is for the HDMI 5V power supply. High is for HDMI work normal.And low is for HDMI off.
3	P3.5	MCU_SET1	I	High(3.3V) or Low(0V)	High(3.3V) or Low(0V)	10k PU	MCU setting pin by externail resistance.1 is for DENON and 0 is for MARANZ
4	P2.3	MCU_SET2	I	High(3.3V) or Low(0V)	High(3.3V) or Low(0V)	10k PU	MCU setting pin by externail resistance. Default is high.
5	P2.2	PS_ON#	O	High(3.3V)	Hi-Z	PD 47k	Power enable is to control the system power on/off. High is for the system power on and low is for standby mode.
6	P2.1	XOUT	O	11.059MHz	-	-	For crystal oscillator
7	P2.0	XIN	I	11.059MHz	-	-	For crystal oscillator
8	P4.1	MCU_SDA	I/O	High(3.3V)	Hi-Z	4.7K PU	I2C DATA signal is for EEPRM IC (24C02).
9	P4.0	MCU_CEC_IN	I	High(3.3V)	High(3.3V)		HDMI CEC signal input.It wakes-up to the system to power on when receive the CEC power command in standby mode.
10	P3.4	Not use	-	Hi-Z	Hi-Z	-	Not use
11	P4.3	MCU_SCL	O	High(3.3V)	Hi-Z	4.7K PU	I2C Clock signal is for EEPRM IC (24C02).
12	VSS	Power	-	-	-	-	Ground Voltage
13	RXVDD	Power	-	-	-	-	VDD for RTC
14	RXIN	Not use	I	-	-	-	Crystal IN for RTC oscillator
15	RXOUT	Not use	O	-	-	-	Crystal OUT for RTC oscillator
16	P4.2	MCU_SET3	I	High(3.3V) or Low(0V)	High(3.3V) or Low(0V)	10k PU	MCU setting pin by externail resistance. Default is high.
17	P1.7	MCU_AMUTE	O	Low(0V)	High(3.3V)	10k PU	Muting signal for audio output. High is for muting and Low is muting off.
18	P1.6	DAC_RST#	O	High(3.3V)	Low(0V)	10k PD	Reset singal is for audio DAC IC PCM1795. High is normal and Low is for reset.
19	P1.5	MCU_LED_CTRL_A	O	High(3.3V)	Low(0V)	10k PD	LED control
20	P1.4	MCU_LED_CTRL_B	O	Low(0V)	High(3.3V)	10k PD	LED control
21	P1.3	MCU_IIC_SCL	I	High(3.3V)	Hi-Z	4.7K PU SW3.3V	I2C Clock signal that comunicate with MT8530. (Slave mode).

Pin	Port Name	Assignment Function	I/O Port Definition			PU/PD	Function Description
			I/O	Normal	OFF		
22	P1.2	MCU_IIC_SDA	O/I	High(3.3V)	Hi-Z	4.7K PU SW3.3V	I2C Data signal that comunicate with MT8530. (Slave mode).
23	P1.1	AC_DET	I	High(3.3V)/50Hz or 60Hz pulse	High(3.3V)/50Hz or 60Hz pulse	10k PU	Detection signal is for AC power.
24	P1.0	Not use	-	Hi-Z	Hi-Z	-	Not use
25	P0.7	RXD_0	I	High(3.3V)	High(3.3V)	10k PU	UART receiving terminal is from external RS232 control.
26	P0.6	TXD_0	O	High(3.3V)	High(3.3V)	10k PU	UART transmission terminal is for external RS232 control.
27	P0.5	KEY_IN_B	I	High(3.3V)	High(3.3V)	10k PU	A/D key B input signal is from key board.
28	P0.4	MCU_IR_IN	I	High(3.3V)	High(3.3V)	33k PU	IR signal input.Low is to activate the IR receiving.
29	P0.3	KEY_IN_A	I	High(3.3V)	High(3.3V)	10k PU	A/D key A input signal is from key board.
30	P0.2	MCU_SET4	I	High(3.3V) or Low(0V)	High(3.3V) or Low(0V)	10k PU	MCU setting pin by externail resistance. Default is high.
31	P0.1	Not use	-	Hi-Z	Hi-Z	-	Not use
32	P0.0	Standby key	I	High(3.3V)	High(3.3V)	10k PU	Power key signal input terminal.Fall-edge is valid.
33	VSS	Power	-	-	-	-	Not use
34	VDD2.5	Power	-	-	-	-	Internal Regulator Output 2.5V
35	VDD	Power	-	-	-	-	Supply Voltage 3.3V
36	RSTN	RSTN	I	High2.5V)	Low(0V)	-	Reset Low active
37	P2.4	Not use	-	Hi-Z	Hi-Z	-	Not use
38	P2.5	Not use	-	Hi-Z	Hi-Z	-	Not use
39	P2.6	Not use	-	Hi-Z	Hi-Z	-	Not use
40	P2.7	CEC_RS232_SWITCH	O	Low(0V)	High(3.3V)	10k PU	Switch singal is to switch MCU receive the singal of the HDMI CEC and RS232. High is for MCU to receive the signal of HDMI CEC and low is for switch those singal input to MT8530.
41	P3.0	Not use	-	Hi-Z	Hi-Z	-	Not use
42	P3.1	AMX_POWER	O	High(3.3V)	Hi-Z	10k PD	Power enable is for RS232C circuit power supply. It is high in power-on and normal standby mode.Low is in STOP standby mode.
43	P3.2	Not use	-	Hi-Z	Hi-Z	-	Not use
44	P3.3	Not use	-	Hi-Z	Hi-Z	-	Not use

Block Diagram

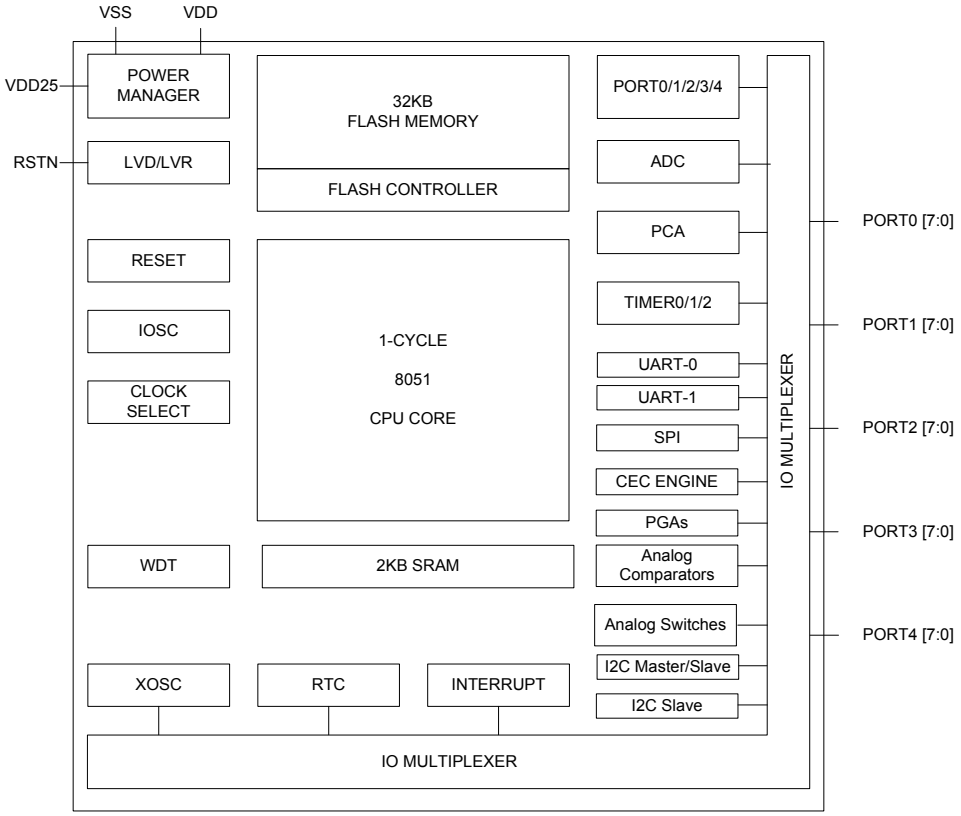

PT6302 (DISPLAY UNIT : U5)

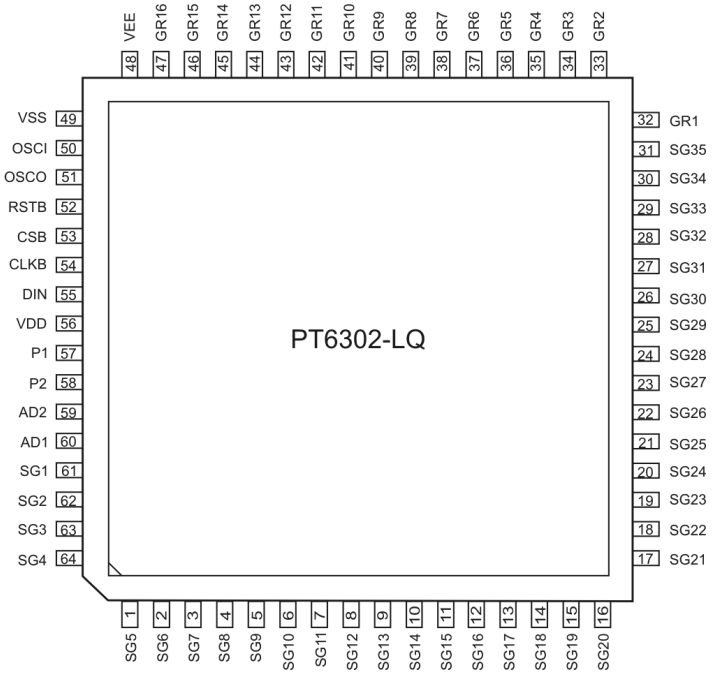

Terminal Function

Pin Name	I/O	Description	Pin No.
SG5 to SG35 SG4 to SG1	O	Segment driver output pin	1 ~ 31 64 ~ 61
GR1 to GR16	O	Grid driver output pin	32 ~ 47
VEE	-	Power supply	48
VSS	-	Ground pin	49
OSCI	I	Oscillator input pin	50
OSCO	O	Oscillator output pin	51
RSTB	I	Reset input pin When this pin is set to "LOW", all functions are initialized.	52
CSB	I	Chip select input pin When this pin is set to "High" Level, the serial data transfer is disabled.	53
CLKB	I	Shift clock input pin The serial data is shifted at the rising edge of CLKB.	54
DIN	I	Serial data input pin	55
VDD	-	Positive power supply	56
P1 to P2	O	General purpose output pin	57 ~ 58
AD2 to AD1	O	Segment driver output pin	59 ~ 60

Block Diagram

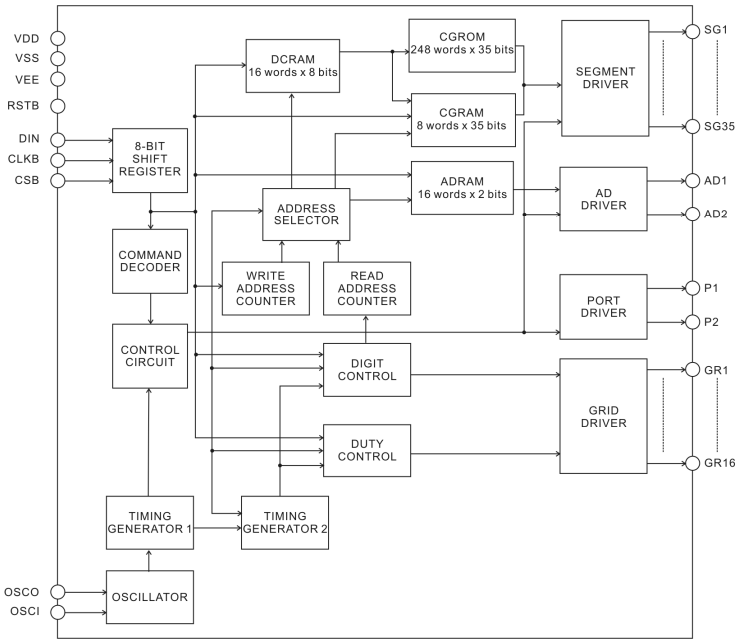

MT8530 (MAIN UNIT : U100)

702	1	2	3	4	5	6	7	8	9	10	11	12	13	14	15	16	17	18	19	20	21	22	23	24	25	26	27	28	29	30	31	32	33	34	35	36	37	38	39	40	41	42	43	RT
A	FESFCO		VOUTD 1		VOUTD 5		VOUTD 9		VOUTD 12		VIND0		VIND12		VIND16		GPIO1		SPDIF		SPDCK		AVDD1 2_27M PLL		NS_XT ALI		CHI_M		CLK_M		DACOU T4		DACOU T1		VCLK		UARXD		ETRXD 3		ETRXD 0		ETRXC LK	A
B		FESFC S		VOUTD 3		VOUTD 7		VOUTD 10		VOUTD 14		VIND4		VIND14		VINHS YNC		GPIO3		SPLRC K		AOBCK		AVDD1 2_DMP LL		CHQ_M		CHD_M		EXT_C AP		DACOU T3		VDATA		IR		ETMDI 0		ETRXD 1		ETRXE R	B
C	FE_SF CLK		FESFDI		VOUTD 4		VOUTD 8		VOUTD 11		VOUTD 15		VIND11		VIND15		GPIO0		GPIO2		SPMCL K		AOSDA TA0		NS_XT ALO		CH1_P		CLK_P		DACOU T6		DACOU T2		MRES ET_		ETCOL		ETRXD 2		ETRXCL K		ETRXD0	C
D		FE_GI O11		FESFC K		VOUTD 6		VOUTD 0		VOUTD 13		VIND1		VIND13		VINCLK		VIND17		AOSDA TA6		AOMCL K		AVDD1 2_APLL		CHQ_P		CHD_P		DACOU T5		AVDD3 3_VDA ZBG		VSTB		UATXD		ETTXE N		ETTXD1		ETTXD2	D
E	FE_SF DO		FE_GI O2		FE_GI O9		VOUTD 2		VOUT LK1		VOUT 16		VOUT 19		VIND2		VINVS YNC		VIND19		AOSDA TA4		AOLRC K		AVDD3 3_XTAL		TP_PLL O		EXT_R ES		AVDD3 3_VDA CR		DACFS		RESET _		ETTXE R		ETTXD3		HDMIS D		CEC	E
F		FE_SF DI		FE_SF HOLD#		NS_CHI N33		VOUT LK2		VOUTD SYNC		VOUT 17		VIND6		VIND3		VIND7		MCIN		AOSDA TA3		AVSS1 2_DMP LL		TN_PLL O		AVSS3 3_HDMI		AVDD1 2_HDMI		AVSS3 3_VDA CBG				OPWR SB		ETMDC		ETRXD V		HDMIS CK		SFDO	F
G	FE_VR DC0		FE_FG		FE_GI O7		FE_JTC LK		FE_GI O6		VOUT SYNC		VOUT 18		VIND8		VIND10		VIND18		SPDAT A		AOSDA TA1		AVSS3 3_XTAL		AVSS3 3_HDMI		AVDD1 2_HDMI		AVDD3 3_VDA CY		LCDRD		VCC3I O_STB		DVSS		HTPLG		SFCK		NFWE N	G
H		FE_JTD O		NS_RFI N		FE_JR STN#		FE_GI O10		VCC3I O_3		VCC3I O_3		VIND6		DVSS		VCC3I O_3		AMUTE		AOSDA TA2		AVSS1 2_APLL		AVDD3 3_HDMI		AVSS1 2_HDMI		AVSS3 3_VDA CV		AVSS3 3_VDA CG		ETCRS		DVSS		AVDD1 0_LDO		SFDI		NFD0	H
J	FE_HA VC		FE_MP XOUT3		FE_GI O5		FE_GI O4		DVSS		DVSS		DVSS		VCC3I O_3		VIND9		DVSS		VCC3I O_PW M		DVSS		AVSS1 2_27M PLL		AVDD3 3_HDMI		AVSS1 2_HDMI				VCC3I O_STB				AVDD3 3_LDO		SFCS		NFD1		NFD2	J
K		FE_MP XOUT2		FE_EQ BIAS		FE_SF CS#		NS_RFI P																										DVSS		AVSS3 3_LDO		NFCLE		NFD3		NFD4	K
L	FE_VW DC3O		FE_VD AC0		FE_MP XOUT1		FE_SF WP#		FE_GI O8																										VCC3I O_2		NFALE		NFCEN 2		NFD5		NFD6	L
M		FE_VW DC2O		FE_AU X1		FE_RS TI		FE_MV DDQ		FE_MV DDQ																										NFREN		NFCEN		NFD7		B_REX TDN		M
N	FE_INB			FE_TRI NC		FE_VF VREF		FE_DV DD33O		FE_DV DD33O		FE_DV DD33O																							VCC3I O_2		DVSS		DVSS		B_RCL K1		B_RCL K1	N
P		FE_INA		FE_TRI NA		FE_VW DC1O		FE_AV DD12_1		FE_DV DD33O			DVSS		DVSS																					NFREN 2		NFREN		VCC2I O		VCC2I O		P
R	FE_INC		FE_INE		FE_TRI NB		FE_TRI ND		FE_AV DD12_2																										DVSS		B_RDQ 25		B_RDQ 30		B_RDQ 29		B_RDQ 26	R
T		FE_INH		FE_FP DODVD		FE_INF		FE_DV DD12I		FE_DV DD12I		DVSS		DVSS																						B_RDQ 28		B_RDQ 27		B_RDQ 24		B_RDQ 31		T
U	FE_INF		FE_FOI N		FE_FP DOCD		FE_V1 4		FE_AV DD33		FE_DV DD12I		DVSS		DVSS																				DVSS		DVSS		DVSS		B_RDQ S3_		B_RDQ S3	U
V		FE_FOI P		FE_RE G_CAP		FE_INE		FE_AV DD33		FE_DV DD12I		DVSS		DVSS																						B_RDQ M3		B_RDQ M2		VCC2I O		VCC2I O		V
W	FE_RFI P2		FE_RFI N2		FE_AG ND		FE_AG ND		FE_AV DD33		FE_DV DD12I		DVSS		DVSS						VCCK		VCCK		VCCK		VCCK_ PWM		VCCK		VCCK				VCC2I O		B_RDQ 18		B_RDQ 21		B_RDQ S2		B_RDQ S2_	W
Y		FE_RFI P		FE_RFI N		FE_LV DS_1N		FE_AG ND		FE_DV DD12I				DVSS						VCCK		DVSS		DVSS		DVSS_ PWM		DVSS		DVSS		VCCK				B_RDQ 23		B_RDQ 16		B_RDQ 20		B_RDQ 22		Y
AA	FE_LV DS_2P		FE_LV DS_2N		FE_LV DS_1P		FE_AG ND		FE_AV DD33_L VDS												DVSS		VCCK		VCCK		VCCK		VCCK		DVSS				DVSS		DVSS		DVSS		B_RDQ 17		B_RDQ 19	AA
AB		FE_LV DS_4N		FE_LV DS_3N		FE_LV DS_5N		FE_AV DD12_3		FE_DV DD33O			FE_DV DD33O							VCCK		VCCK		DVSS		DVSS		DVSS		VCCK		VCCK				B_RVR EF		NC1		VCC2I O		VCC2I O		AB
AC	FE_LV DS_4P		FE_LV DS_3P		FE_LV DS_5P		FE_AV DD12_4		FE_DV DD33O												DVSS		DVSS		DVSS		DVSS		DVSS		DVSS								B_RA6		B_RDQ 2		B_RDQ E		B_RWE_	AC
AD		FE_GI REG		FE_FO O		FE_GA NSW2		FE_GI O0												VCCK		VCCK		DVSS		DVSS		DVSS		VCCK		VCCK				B_RBA 1		B_RA0		B_RBA 0		B_RCS_		AD
AE	FE_FM O		FE_TE AYPW M		FE_GA NSW1		FE_OS CEN		FE_GI O12												DVSS		DVSS		DVSS		DVSS		DVSS		DVSS				DVSS		DVSS		DVSS		B_RA1 2		B_RA7	AE
AF		FE_DM O		FE_FU O2		FE_FU O4		FE_CM O0												VCCK		VCCK		DVSS		DVSS		DVSS		VCCK		VCCK				B_RA1 0		B_RA1		VCC2I O		VCC2I O		AF
AG	FE_GI O3		FE_UM IT		FE_GA NSW3		FE_FU O3		FE_GI O1												DVSS		DVSS		DVSS		DVSS		DVSS		DVSS						B_RA2		B_RA6		B_RDQ T		B_RA3	AG
AH		FE_PL AY#		FE_EJ ECT#		FE_TR O		FE_FS OURCE												VCCK		VCCK		DVSS		DVSS		DVSS		VCCK		VCCK				B_RA8		B_RA1 1		B_RCA S_		B_RA4	AH
AJ	FE_RF SCL		FE_XT ALSCL		FE_TR AYIN#		DVSS_ XTAL		VCLK2 5MI												DVSS		VCCK		VCCK		VCCK		VCCK		DVSS				DVSS		DVSS		DVSS		B_RRA S_		B_RA3	AJ
AK		USB_D M0		FE_TR AYOUT		AVSS1 2_USB		AVDD1 2_USB												VCCK		DVSS		DVSS		DVSS		DVSS		DVSS		VCCK				B_RDQ 9		B_RA1 3		VCC2I O		VCC2I O		AK
AL	USB_D P0		USB_D M1		AVSS3 3_USB		FE_SV DD33														VCCK		VCCK		VCCK		VCCK		VCCK		VCCK				VCC2I O		B_RDQ 11		B_RDQ 14		B_RCL H0		B_RCL H0	AL
AM		USB_D P1		USB_V RT		FE_SI VDD33		FE_TI O																												B_RDQ M1		B_RDQ 12		B_RDQ 10		B_RDQ 13		AM
AN	FE_ST XP		AVDD3 3_USB		FE_SA GND		FE_SP LLVDD 12																												DVSS		DVSS		DVSS		B_RDQ 15		B_RDQ 8	AN
AP		FE_ST XN		CORE_ RESET B		FE_SI XVDD1 2		FE_AV DD12_ RX																												B_RDQ 7		B_RDQ M0		VCC2I O		VCC2I O		AP
AR	FE_SR XP		FE_SR XN		RTCRBI AS		AVDD1 2_ADC										DVSS		VCC2I O						DVSS				DVSS		VCC2I O						B_RDQ 6		B_RDQ 0		B_RDQ S1_		B_RDQ S1	AR
AT		XI_RTC		XO_RT C		AVSS1 2_ADC				FE_GI O13		SCL		DVSS		A_RDQ 5		A_RDQ M0		A_RDQ 11		DVSS		A_RA1 1		A_RA1		A_RBA 2		A_RVR EF		A_RDQ 23		DVSS		DVSS		B_RDQ 5		B_RDQ S0		B_RDQ S0_		AT
AU	AVDD3 3_RTC		AVSS3 3_RTC		AVDD3 3_SAC D		AVDD3 3_ST		AVSS1 2_ST2		FFPW RQ		VCC3I O_1		A_RDQ _3		DVSS		A_RDQ _9		DVSS		A_RCA S_		DVSS		A_RBA 1		DVSS		A_RDQ 21		DVSS		A_RDQ M3		A_RDQ 27		DVSS		B_RDQ 3		B_RDQ 2	AU
AV		FE_JRT CLK		AVSS3 3_SAC D		AVDD1 2_SRX		AVSS1 2_ST1		AVDD1 2_ST		GPIO6		SDA		A_RDQ 0		A_RDQ M1		A_RDQ 14		A_RA1 3		A_RCS_		A_RA2		A_RA5		NC		A_RDQ 16		A_RDQ M2		A_RDQ 25		A_RDQ 30		VCC2I O		VCC2I O	AV
AW	FE_JT MS		FE_JTD I		AVDD1 2_STN1		AVDD1 2_STR2		AVSS1 2_ST2		GPIO5		DVSS		A_RDQ 1		DVSS		A_RDQ 12		DVSS		A_RDQ T		DVSS		A_RA9		DVSS		A_RDQ 18		DVSS		A_RDQ 28		DVSS		A_AVD D12_M EMPLL		B_RDQ 4		B_RDQ 1	AW
AY		NS_TS TN		SRXP_ 2		AVDD1 2_STX2		AVSS3 3_XTAL 25M		GPIO4		TRST_		VCC2I O		A_RDQ S0		VCC2I O		A_RDQ 8		VCC2I O		A_RA4		VCC2I O		A_RA1 0		VCC2I O		A_RDQ 22		VCC2I O		A_RDQ 24		VCC2I O		A_AVS D12_M EMPLL		DVSS		AY
BA	NS_TS TP		STXN_1		STXN_2		RREF		XTAL25 MO		TCK		A_RDQ 4		A_RDQ 6		A_RDQ S1_		A_RDQ 15		A_RCL K0_		A_RA8		A_RA1 2		A_RA7		A_RCK E		A_RDQ 20		A_RDQ S2		A_RDQ S3_		A_RDQ 26		A_RCL K1		DVSS		VCC2I O	BA
BB		SRXN_ 1		SRXN_ 2		SVCTS T		XTAL25 MI		TDO		TDI		VCC2I O		A_RDQ S0_		VCC2I O		A_RDQ 10		VCC2I O		A_RRA S_		VCC2I O		A_RBA 0		VCC2I O		A_RDQ 17		VCC2I O		A_RDQ 31		VCC2I O		A_TP_ MEMP LL		VCC2I O	BB
BC	SRXP_ 1		STXP_1		STXP_2		AVDD3 3_XTAL 25M		GPIO7		TMS		A_RDQ 2		A_RDQ 7		A_RDQ S1		A_RDQ 13		A_RCL K0		A_RA0		A_RA6		A_RA3		A_RW E_		A_RDQ 19		A_RDQ S2_		A_RDQ S3		A_RDQ 29		A_RCL K1_		A_TN_ MEMP LL		A_REX TDN	BC
LB	1	2	3	4	5	6	7	8	9	10	11	12	13	14	15	16	17	18	19	20	21	22	23	24	25	26	27	28	29	30	31	32	33	34	35	36	37	38	39	40	41	42	43	702

Block Diagram

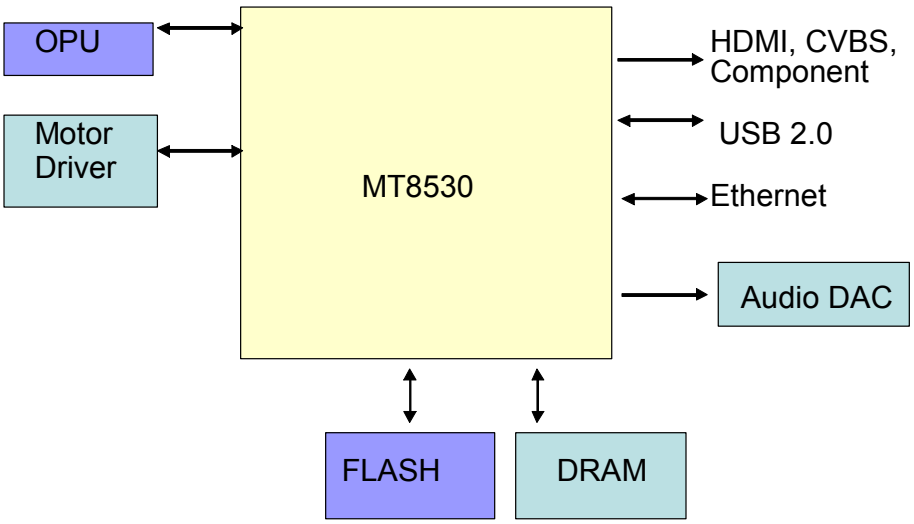

LAN8710 (MAIN UNIT : U901)

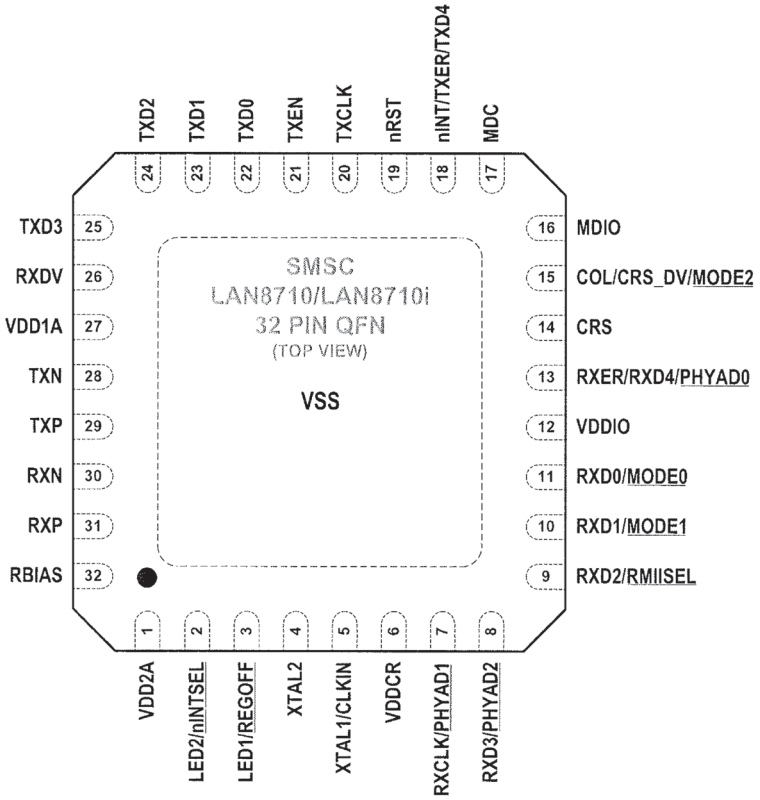

Block Diagram

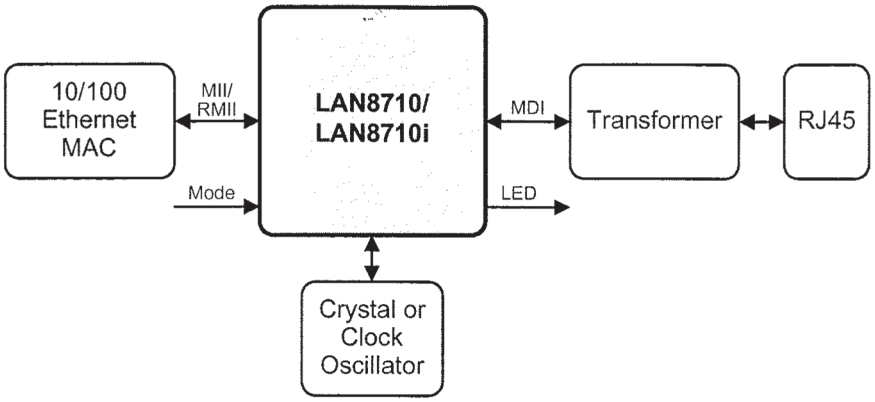

NJM2566AV (MAIN UNIT : U20)

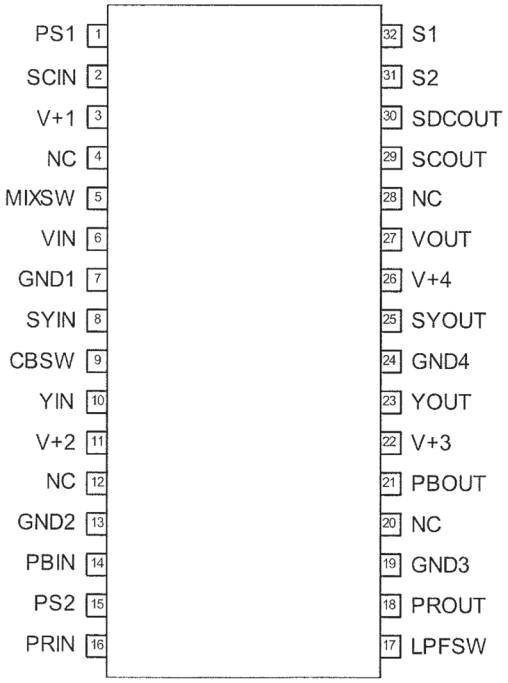

Block Diagram

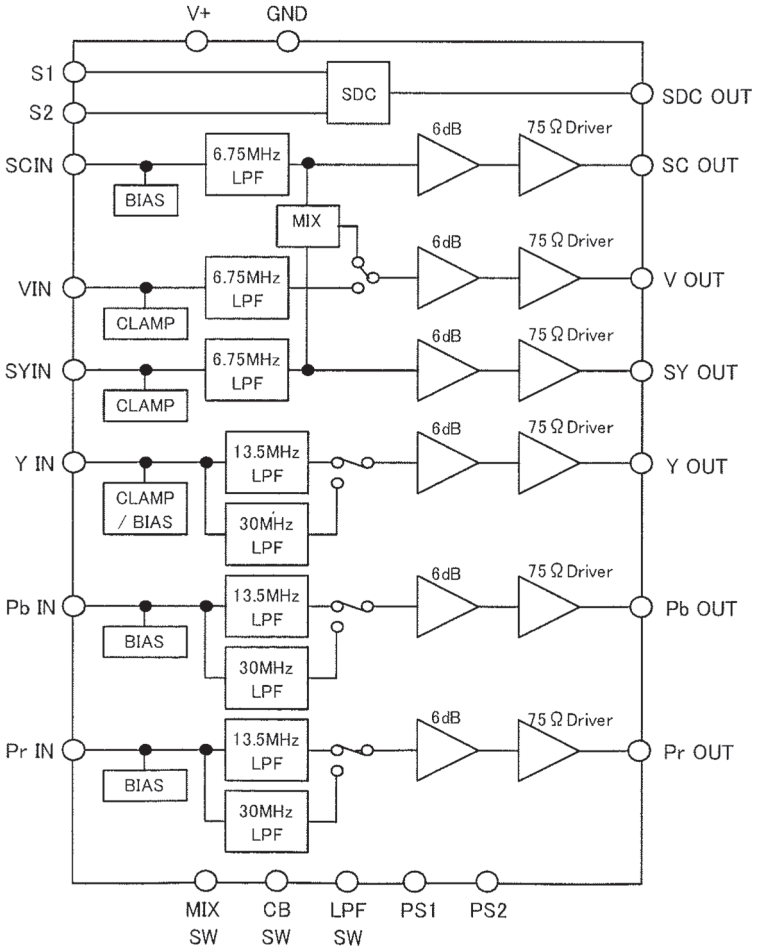

PCM1795DBR (AUDIO UNIT : U1, U101, U111, U201, U211)

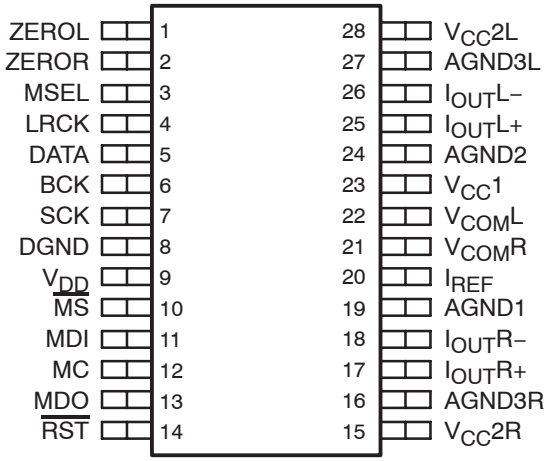

Block Diagram

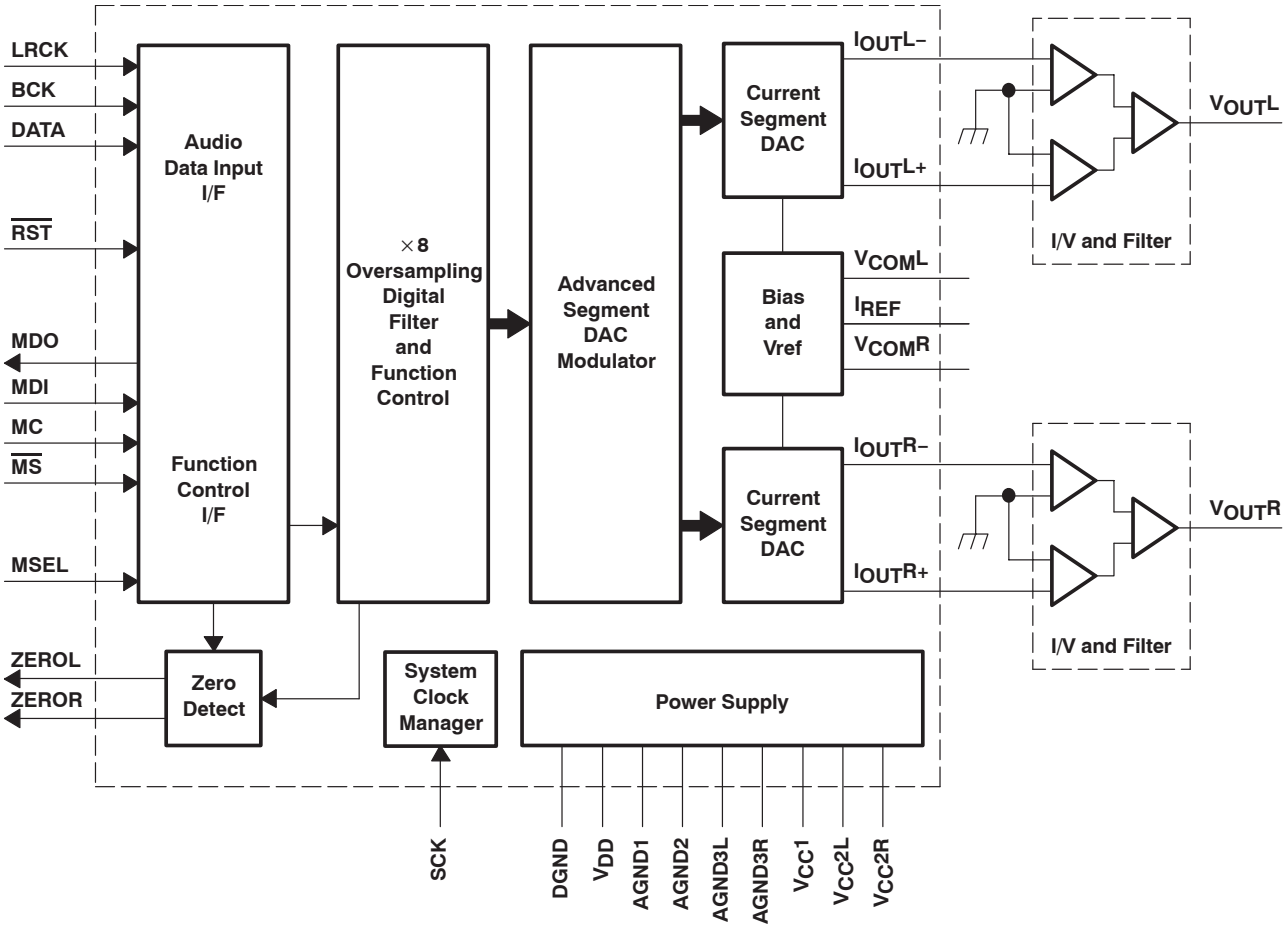

Terminal Function

TERMINAL NAME	TERMINAL PIN	I/O	DESCRIPTIONS
AGND1	19	–	Analog ground (internal bias)
AGND2	24	–	Analog ground (internal bias)
AGND3L	27	–	Analog ground (L-channel DACFF)
AGND3R	16	–	Analog ground (R-channel DACFF)
BCK	6	I	Bit clock input(1)
DATA	5	I	Serial audio data input(1)
DGND	8	–	Digital ground
$I_{OUT}L+$	25	O	L-channel analog current output+
$I_{OUT}L–$	26	O	L-channel analog current output–
$I_{OUT}R+$	17	O	R-channel analog current output+
$I_{OUT}R–$	18	O	R-channel analog current output–
I_{REF}	20	–	Output current reference bias pin
LRCK	4	I	Left and right clock (f_S) input(1)
MC	12	I	Mode control clock input(1)
MDI	11	I	Mode control data input(1)
MDO	13	I/O	Mode control readback data output(3)
$\overline{MS}$	10	I/O	Mode control chip-select input(2)
MSEL	3	I	$I^2C/\overline{SPI}$ select(1)
$\overline{RST}$	14	I	Reset(1)
SCK	7	I	System clock input(1)
$V_{CC}1$	23	–	Analog power supply, 5 V
$V_{CC}2L$	28	–	Analog power supply (L-channel DACFF), 5 V
$V_{CC}2R$	15	–	Analog power supply (R-channel DACFF), 5 V
$V_{COM}L$	22	–	L-channel internal bias decoupling pin
$V_{COM}R$	21	–	R-channel internal bias decoupling pin
V_{DD}	9	–	Digital power supply, 3.3 V
ZEROL	1	I/O	Zero flag for L-channel(2)
ZEROR	2	I/O	Zero flag for R-channel(2)

(1) Schmitt-trigger input, 5-V tolerant
(2) Schmitt-trigger input and output. 5-V tolerant input and CMOS output
(3) Schmitt-trigger input and output. 5-V tolerant input. In I^2C mode, this pin becomes an open-drain 3-state output; otherwise, this pin is a CMOS output.

HIN202EIBNZ-T (IR POWER UNIT : U201)

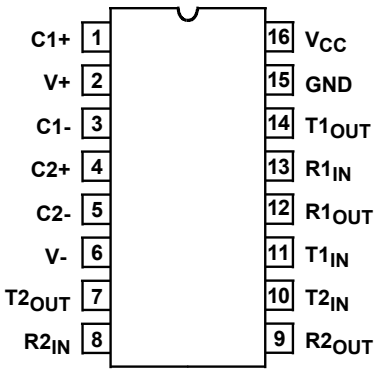

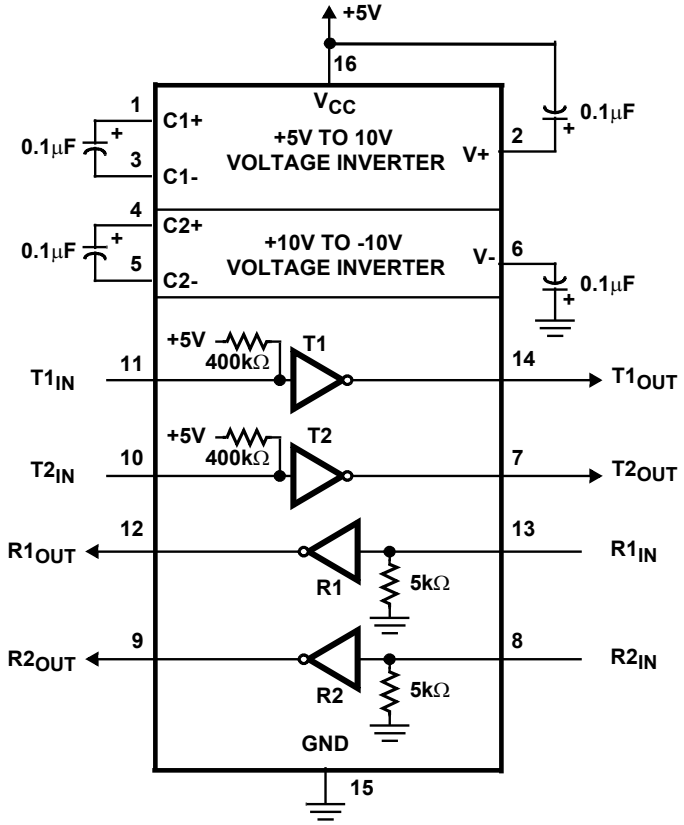

2. FL DISPLAY

FL TUBE (15-BT-114GNK) (Display UNIT: U3)

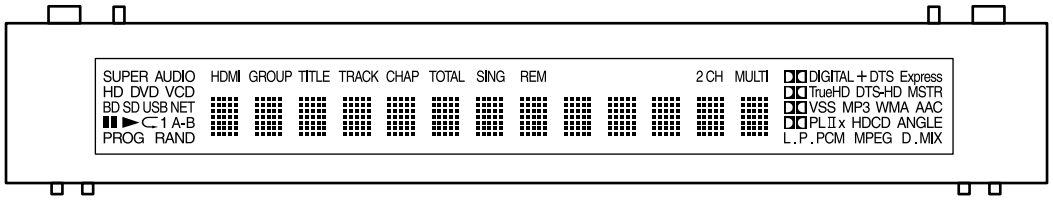

GRID ASSIGNMENT

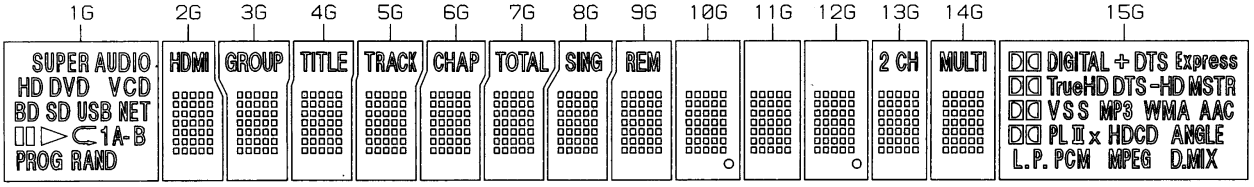

PIN CONNECTION

PIN NO.	50	49	48	47	46	45	44	43	42	41	40	39	38	37	36	35	34	33	32	31	30	29	28	27	26	25	24	23	22	21	20	19	18	17	16	15	14	13	12	11	10	9	8	7	6	5	4	3	2	1
CONNECTION	P36	P37	P26	P25	P24	P23	P22	P21	P10	P9	P8	P7	P6	P5	P4	P3	P2	P1					P9	P8	P7	P6	P5	P4	P3	P2	P1	NC	NC	NC	15G	14G	13G	12G	11G	10G	9G	8G	7G	6G	5G	4G	3G	NP	NX	F+

PIN NO.	62	61	60	59	58	57	56	55	54	53	52
CONNECTION	F-	NX	NP	NP	P89	P90	P91	P92	P93	P94	P95

NOTE
1) F-,F+ --- Filament
2) NP ------ No pin
3) DL ------ Datum Line
4) 1G~15G --- Grid
5) Solder composition is Sn-3Ag-0.5Cu
6) NC ------ No connection
(NC pin should be electrically open on the PC board)
7) NX ------ No extend pin

ANODE CONNECTION

	1G	2G	3G	4G	5G	6G	7G	8G	9G	10G	11G	12G	13G	14G	15G
P1	SUPER	1-1	1-1	1-1	1-1	1-1	1-1	1-1	1-1	1-1	1-1	1-1	1-1	1-1	DIGITAL
P2	AUDIO	2-1	2-1	2-1	2-1	2-1	2-1	2-1	2-1	2-1	2-1	2-1	2-1	2-1	+
P3	HD	3-1	3-1	3-1	3-1	3-1	3-1	3-1	3-1	3-1	3-1	3-1	3-1	3-1	(+) DTS
P4	DVD	4-1	4-1	4-1	4-1	4-1	4-1	4-1	4-1	4-1	4-1	4-1	4-1	4-1	Express
P5	V	5-1	5-1	5-1	5-1	5-1	5-1	5-1	5-1	5-1	5-1	5-1	5-1	5-1	TrueHD
P6	CD	1-2	1-2	1-2	1-2	1-2	1-2	1-2	1-2	1-2	1-2	1-2	1-2	1-2	DTS (-HD)
P7	BD	2-2	2-2	2-2	2-2	2-2	2-2	2-2	2-2	2-2	2-2	2-2	2-2	2-2	-HD
P8	SD	3-2	3-2	3-2	3-2	3-2	3-2	3-2	3-2	3-2	3-2	3-2	3-2	3-2	MSTR
P9	USB	4-2	4-2	4-2	4-2	4-2	4-2	4-2	4-2	4-2	4-2	4-2	4-2	4-2	(VS)
P10	NET	5-2	5-2	5-2	5-2	5-2	5-2	5-2	5-2	5-2	5-2	5-2	5-2	5-2	VS (S)
P11		1-3	1-3	1-3	1-3	1-3	1-3	1-3	1-3	1-3	1-3	1-3	1-3	1-3	(VS) S
P12	▷	2-3	2-3	2-3	2-3	2-3	2-3	2-3	2-3	2-3	2-3	2-3	2-3	2-3	MP3
P13	⊂	3-3	3-3	3-3	3-3	3-3	3-3	3-3	3-3	3-3	3-3	3-3	3-3	3-3	WMA
P14	1	4-3	4-3	4-3	4-3	4-3	4-3	4-3	4-3	4-3	4-3	4-3	4-3	4-3	AAC
P15	A-	5-3	5-3	5-3	5-3	5-3	5-3	5-3	5-3	5-3	5-3	5-3	5-3	5-3	(PL)
P16	B	1-4	1-4	1-4	1-4	1-4	1-4	1-4	1-4	1-4	1-4	1-4	1-4	1-4	PL
P17	PROG	2-4	2-4	2-4	2-4	2-4	2-4	2-4	2-4	2-4	2-4	2-4	2-4	2-4	II
P18	RAND	3-4	3-4	3-4	3-4	3-4	3-4	3-4	3-4	3-4	3-4	3-4	3-4	3-4	X
P19	-	4-4	4-4	4-4	4-4	4-4	4-4	4-4	4-4	4-4	4-4	4-4	4-4	4-4	HDCD
P20	-	5-4	5-4	5-4	5-4	5-4	5-4	5-4	5-4	5-4	5-4	5-4	5-4	5-4	ANGLE
P21	-	1-5	1-5	1-5	1-5	1-5	1-5	1-5	1-5	1-5	1-5	1-5	1-5	1-5	L.
P22	-	2-5	2-5	2-5	2-5	2-5	2-5	2-5	2-5	2-5	2-5	2-5	2-5	2-5	P.
P23	-	3-5	3-5	3-5	3-5	3-5	3-5	3-5	3-5	3-5	3-5	3-5	3-5	3-5	PCM
P24	-	4-5	4-5	4-5	4-5	4-5	4-5	4-5	4-5	4-5	4-5	4-5	4-5	4-5	MPEG
P25	-	5-5	5-5	5-5	5-5	5-5	5-5	5-5	5-5	5-5	5-5	5-5	5-5	5-5	D.MIX
P26	-	1-6	1-6	1-6	1-6	1-6	1-6	1-6	1-6	1-6	1-6	1-6	1-6	1-6	-
P27	-	2-6	2-6	2-6	2-6	2-6	2-6	2-6	2-6	2-6	2-6	2-6	2-6	2-6	-
P28	-	3-6	3-6	3-6	3-6	3-6	3-6	3-6	3-6	3-6	3-6	3-6	3-6	3-6	-
P29	-	4-6	4-6	4-6	4-6	4-6	4-6	4-6	4-6	4-6	4-6	4-6	4-6	4-6	-
P30	-	5-6	5-6	5-6	5-6	5-6	5-6	5-6	5-6	5-6	5-6	5-6	5-6	5-6	-
P31	-	1-7	1-7	1-7	1-7	1-7	1-7	1-7	1-7	1-7	1-7	1-7	1-7	1-7	-
P32	-	2-7	2-7	2-7	2-7	2-7	2-7	2-7	2-7	2-7	2-7	2-7	2-7	2-7	-
P33	-	3-7	3-7	3-7	3-7	3-7	3-7	3-7	3-7	3-7	3-7	3-7	3-7	3-7	-
P34	-	4-7	4-7	4-7	4-7	4-7	4-7	4-7	4-7	4-7	4-7	4-7	4-7	4-7	-
P35	-	5-7	5-7	5-7	5-7	5-7	5-7	5-7	5-7	5-7	5-7	5-7	5-7	5-7	-
P36	-	HDMI	GROUP	TITLE	TRACK	CHAP	TOTAL	SING	REM	Dp	-	Dp	2 CH	MULTI	-

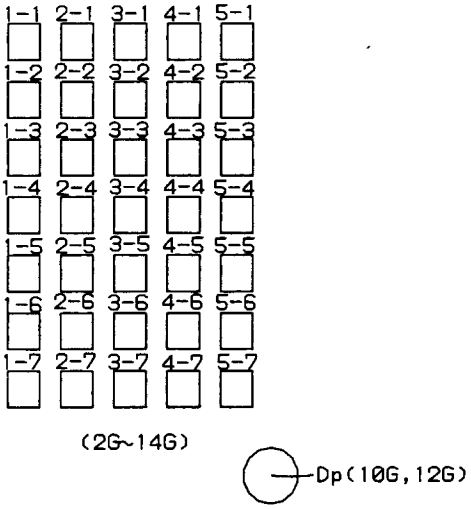

Personal notes: