SS-10/11/21 Service Manual

Service Manual

Home Theater System

SoundSpace 10
SoundSpace 11
SoundSpace 21

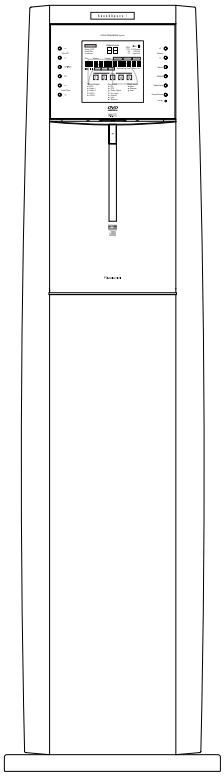

Nakamichi

GENERAL

1.1. Product Codes

(1) SoundSpace 10
D202

(2) SoundSpace 11
D207
N209GN0A SS-11 Floor Stand CNT
N210GN0A SS-11 Floor Stand SP A 5/6
N210GN0B SS-11 Floor Stand SP B 6/6

(3) SoundSpace 21
D204
S357GN0A Floor SP A
S357GN0B Floor SP B
S357GN0C Floor SP C
S357GN0D Floor SP D
S358 SP Center Woofer L
S359 SP Woofer R

Abbreviations for Destinations:

CAN	— Canada	CH	— China
DA	— South America		
EP	— Europe	HK	— Hong Kong
JPN	— Japan	KR	— Korea
OTR	— Other	TW	— Taiwan
UK	— United Kingdom		
USA	— U.S.A.	AUS	— Australia
ML	— Malaysia		

1.2. System Configuration

The SoundSpace 10, 11 and 21 consist of the following units.

(1) SoundSpace 10/11 Configuration
See Figs. 1.1 and 1.2.

● **Main Unit (See pages 1-1, 1-2, ... in this manual)**
Controls entire of the System. Mainly consists of the following sections:
- Microprocessor section
- Display control section
- 5-Disc Changer section (Mechanism section)

● **A/V Tuner/Processor Unit**
(See pages 2-1, 2-2, ... in this manual)
Mainly consists of the followings:
- Tuner section
- Audio/video signal processing section
- Audio/video amp. section
- Power supply section

● **Subwoofer L/R Unit**
(See pages 3-1, 3-2, ... in this manual)
- Power amp. section
- Power supply section

● **Satellite Speakers**
(See pages 4-1, 4-2, ... in this manual)
- Front L and R speakers
- Rear L and R speakers
- Center speaker

● **Main Remote Control/Sub Remote Control**

● **Floor Stands (SS-11 only)**
- Floor stand for Main Unit
- Floor stand for Front L/R Speaker
- Floor stand for Rear L/R Speaker

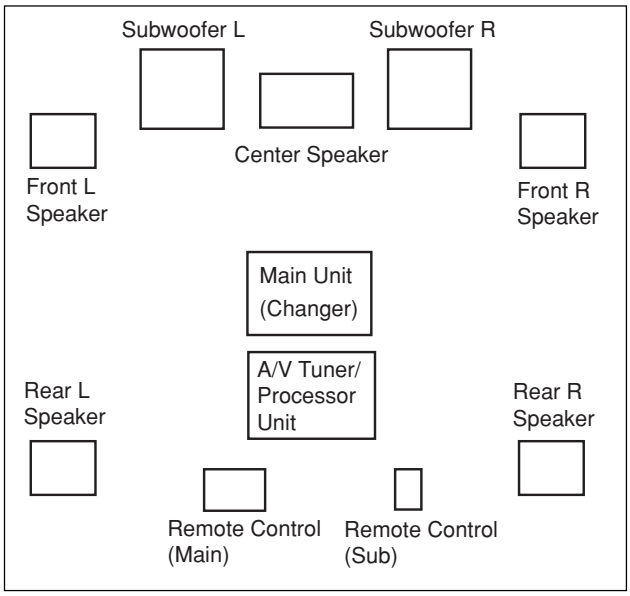

Fig. 1.1 SS-10 Configuration

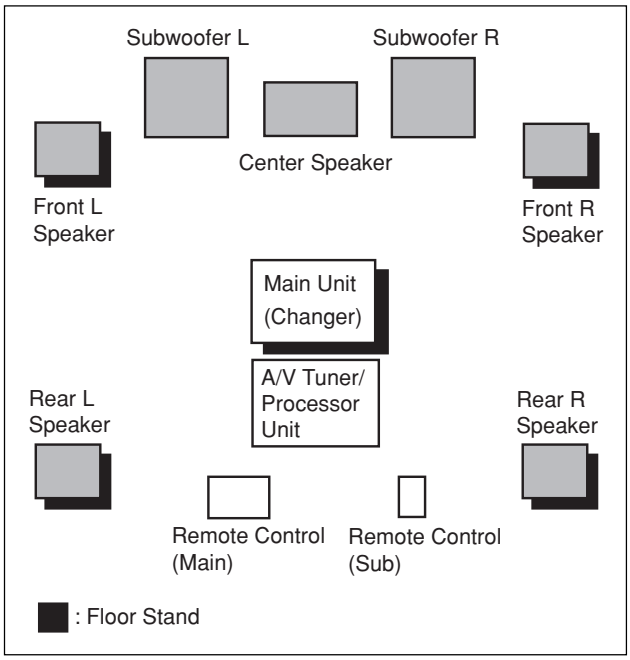

Fig. 1.2 SS-11 Configuration

(2) SoundSpace 21 Configuration

See Fig. 1.3.

- **Main Unit (See pages 1-1, 1-2, ... in this manual)**
  Controls entire of the System. Mainly consists of the following sections:
  - Floor Stand Ass'y
  - Microprocessor section
  - Display control section
  - 5-Disc Changer section (Mechanism section)

- **A/V Tuner/Processor Unit**
  (See pages 2-1, 2-2, ... in this manual)
  Mainly consists of the followings:
  - Tuner section
  - Audio/video signal processing section
  - Audio/video amp. section
  - Power supply section

- **Subwoofer L/R Unit**
  (See pages 3-1, 3-2, ... in this manual)
  - Power amp. section
  - Power supply section

- **Satellite Speakers**
  (See pages 5-1, 5-2, ... in this manual)
  - Front L and R speakers (Movable type)
  - Rear L and R speakers (Movable type)
  - Center speaker

- **Main Remote Control/Sub Remote Control**

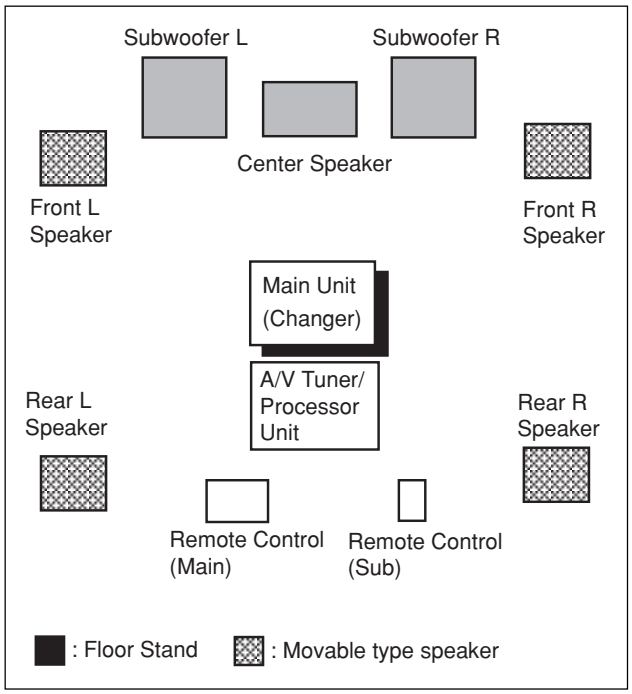

Fig. 1.3 SS-21 Configuration

1.3. Cautions/Warnings

(1) Product Safety Notice

Parts marked with the symbol ⚠ in the schematic diagram have critical characteristics.
Use ONLY replacement parts recommended by the manufacturer. It is recommended that the unit be operated from a suitable DC supply or batteries during initial check-out procedures.

(2) Leakage Current Check/Resistance Check

Before returning the unit to the customer, make sure you make either (1) a leakage current check or (2) a line to chassis resistance check. If the leakage current exceeds 0.5 milliamp, or if the resistance from chassis to either side of the power cord is less than 240 k ohms, the unit is defective.
WARNING — DO NOT return the unit to the customer until the problem is located and corrected.

(3) Protection of Eyes from Laser Beam

To protect eyes from invisible laser beam during servicing, ***DO NOT LOOK AT THE LASER BEAM*** on the Changer.

(4) Laser Caution

CAUTION
Adjusting the knobs, switches, and controls, etc. or taking actions not specified herein may result in a harmful emission of laser beams. This Changer must be adjusted and repaired only by qualified service personnel.

OBSERVERA!
Sådana inställningar av rattarna, omkopplarna eller övriga kontrollknappar som inte är beskriva i bruksanvisningen kan resultera i farlig laserutstrålning. Justering eller reparation av denna kompaktskivspelare skall endast utföras av kvalificerad servicepersonal.

OBS!
Indstilling af knapper, cmskiftere og øvrige kontrolknapper, som ikke følger den i brugsanvisningen beskrevne måde, kan resultere i farlig laserudstråling. Justering eller reparation af denno CD-afspiller må kun udføres af kvalificeret servicepersonale.

OBS!
Justering av ratt, brytere og kontroller andre enn de som er beskrevet her, kan resultere i farlig laserbestråling. Justering eller reparasjon av denne kompaktdiskspilleren ma bare utføres av kvalifiserte fagfolk.

HUOMAUTUS
Jos nuppeja, kytkimiä ja säätimiä ym, säädetään tai laitetta käytetään toisella tavalla kuin on selostettu, tuloksena saattaa olla vaarallista lasersäteiden vuotoa. CD-soittimen säätö ja korjaus on jätettävä aina asiantuntevan huoltoteknikon tehtäväksi.

ADVERSEL: USYNLIG LASERSTRÅLING VED ÅBNING. UNDGÅ UDSAETTELSE FOR STRÅLING.

VARO!: AVATTAESSA OLET ALTTIINA NÄKYMÄTTÖMÄLLE LASERSÄTEILYLLE. ÄLÄ KATSO SÄTEESEEN.

VARNING — OSYNLIG LASERSTRÅLNING NAR DENNA DEL ÄR ÖPPNAD. BETRAKTA EJ STRÅLEN.

CLASS 1
LASER PRODUCT

THIS COMPACT DISC PLAYER IS CLASSIFIED AS A CLASS 1 LASER PRODUCT.
THE CLASS 1 LASER PRODUCT LABEL IS LOCATED ON THE REAR EXTERIOR.

(5) When Replacing the DVD Traverse Ass'y

When removing the DVD Traverse Ass'y in the Main unit, you need to short the laser diode shorting lands beforehand.
For details, see 2.7. "Mechanism P.C.B. Ass'y" on page 1-8.

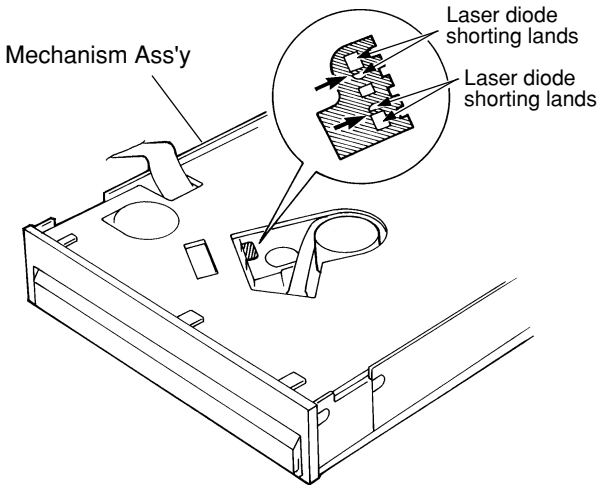

Fig. 1.4 Shorting the Laser Diode Shorting Lands

(6) Caution for handling Laser Pickup of DVD Player

[Electric Influence because of the impressed electricity]

Laser pickup of DVD player is more weak and sensitive than CD player's one, and it is possible to damage the pickup under the specific electrical environment, such as impressed or leaked electricity including the static electricity. The electricity, impressed during modification for zone coding, updating the micro processor and so forth, may influence the laser pickup.

Prevention of Impressed Electricity

- **In general**

  It is very difficult to specify why and how the static electricity is impressed. It is considerable to be thoroughly for grounding the working bench and fastening the antistatic electricity wrist band, besides the daily management of isolating resistor of soldering iron and leaked current in the working room.
  Unfortunately, it is impossible for us, even as the supplier, to assure all these conditions at any distributor or subsidiary that is not identical to the situation in the manufacturing site. Consequently, we don't recommend any modification for zone coding, that can be a negative factor against the quality assurance, and consider that the pickup failure of any modified unit for zone code shall be out of warranty.

- **How to prevent or discharge the impressed electricity**

  Please refer to the following items.

  1) **Grounding**

     When you repair a laser pickup, first ground the human body, as well as the measuring instruments and other tools (with particular caution to soldering iron). What's more, your workbench and floor should desirably be grounded using conductive sheet or copper plate. Be careful so as not to let your clothes touch the laser pickup, as static electricity on the clothes may be released even if your body is grounded.

  2) **Discharge of electricity**

     Be sure to discharge electricity from objects brought into contact with the laser pickup (i.e., soldering iron, tweezers, probes, volt-ohm-meter probes, etc.) before starting work by contacting them with the DVD player's chassis. Besides, never touch the laser pickup while power is applied.

3) Soldering iron

The soldering iron for use in repair work should be: (1) a ceramic soldering iron, (2) a soldering iron with its metal part grounded, or (3) a soldering iron whose insulation resistance after of power application is 10 M-ohm or more at 500 VDC. Soldering should be completed promptly, at a soldering iron temperature of 320°C ideally. (39W). A soldering iron hearted above this temperature can break down the laser diode.

Condition of Soldering Iron

Type	Output Wattage	Tip Temperature	Isolated Resistance	Leaked Current
For IC or LSI	13 — 18W	300±40°C	≥100MΩ	≤1.0μA
For Elec. Part	23 — 30W	360±40°C	≥50MΩ	≤2.0μA

Note: A precise digital tester is needed to measure the leaked current.

1.4. Before Shipping the Floor SP Ass'y [SS-21 Only]

Before shipping each Floor SP Ass'y (Front L/R or Rear L/R) of SS-21, be sure to insert the Lock Screw into the hole at the bottom of the Floor SP Ass'y, to fix the internal Satellite SP Ass'y.

To insert the Lock Screw, move the Satellite SP Ass'y in the Floor SP Ass'y to the upper most position. (You can move it by the Speaker Up button at the bottom of the Floor SP Ass'y. Also you can move it by hand.)

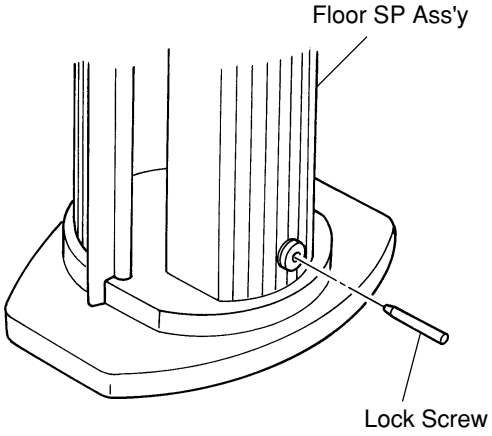

Fig. 1.5 Lock Screw [SS-21]

1.5. RAM Clear Before Shipping the System

Before shipping, be sure to perform the RAM Clear to clear the user setting values and to perform initialization operation of the changer mechanism. For details, refer to 3.1.3/3.2.3 "RAM Clear" on page 1-13/1-17.

1.6. Package Ass'y and Accessory Ass'y
1.6.1. Package Ass'y and Accessory Ass'y [SS-10/11]
(1) For Main (Main Unit, A/V Tuner/Processor Unit, Remote Control Unit) [SS10/11]

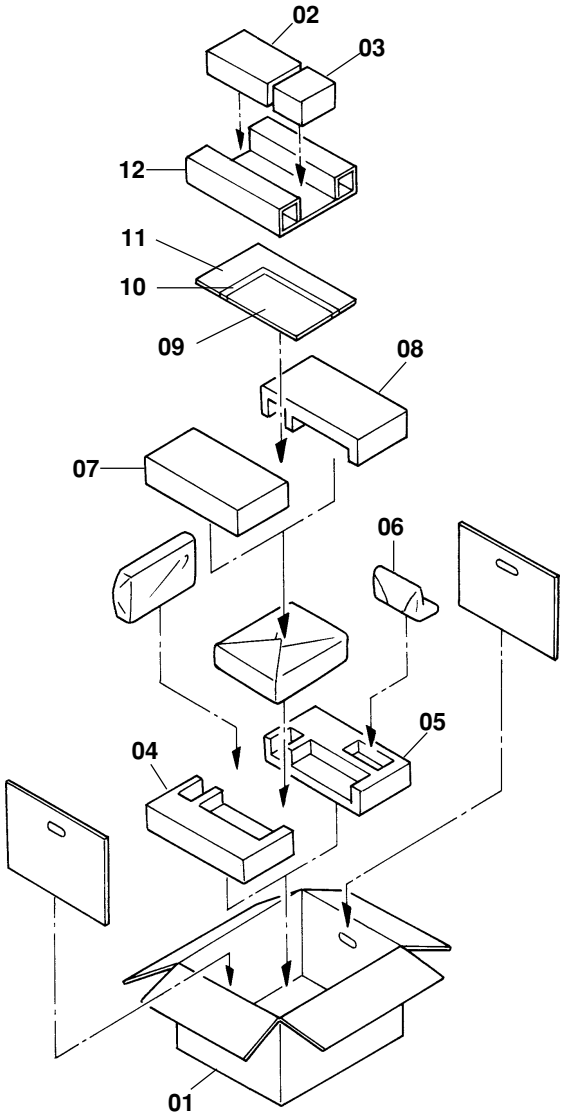

Fig. 1.6 Main Unit [SS-10/11]

Schematic Ref. No.	Part No.	Description	Q'ty
	—	**Package & Accessory Ass'y (Main Unit) [SS-10/11]**	
01	0F05485B	Carton Box Center **[SS-10]**	1
	0F05569A	Carton Box Center **[SS-11]**	1
02	0F05489A	Accessory Box	1
03	0F05533A	Remote Box	1
04	0F05508C	Packing Bottom Center L	1
05	0F05509B	Packing Bottom Center R	1
06	HA08121A	D Top Stand Ass'y	1
07	0F05486B	Packing Top Center L	1
08	0F05487A	Packing Top Center R	1
09	0D07295A	Template Bracket	1
10	0D07294A	Template Speaker	1
11	0D07230A	Template	1
12	0F05538A	Carton Spacer Top	1
—	0F04458A	Sheet	1
—	0F05488A	Soft Bag	1
—	0F05534A	Remote Box Spacer A	1
—	0F05535A	Remote Box Spacer B	1
—	0F05536A	Soft Bag Remote	1
—	0F05539A	Soft Bag Center Stand	1
—	0F05565A	Door Protect Paper	1
—	0F05566A	Open Protect Paper	1
—	0J08641A	Spacer Tapping	2
—	0B85373A	3.5 Plug Cable 5m	2
—	0B85375A	3P RCA Cable 5m	1
—	0B85376A	4P RCA Cable 5m	1
—	0B85377A	Digital Cable 5m	1
—	0B85379A	S Video Cable 5m	1
—	0B85381A	13P DIN Cable 5m L	1
—	0B85383A	13P DIN Cable 5m S	1
—	0B90462A	Battery UM4x1	2
—	0B90683A	Battery AM3	6
—	0B90818A	AM Loop Antenna Ass'y	1
—	0B90819A	FM Indoor Antenna	1
—	0B90820A	Antenna Adaptor	1
—	0D07105A	Speaker Cable	3
—	0D07224A	Owner's Manual (Japanese) **[SS-10]**	1
	0D07301A	Owner's Manual (Japanese) **[SS-11]**	1
—	0D07225B	Owner's Manual (English) **[SS-10]**	1
	0D07299B	Owner's Manual (English) **[SS-11]**	1
—	0D07226A	Owner's Manual (English/French/ German/Spanish/Italian) **[SS-10]**	1
	0D07302A	Owner's Manual (English/French/ German/Spanish/Italian) **[SS-11]**	1
—	0D07227B	Owner's Manual (French/Spanish) **[SS-10]**	1
	0D07300B	Owner's Manual (French/Spanish) **[SS-11]**	1
—	0D07228A	Owner's Manual (China) **[SS-10]**	1
	0D07303A	Owner's Manual (China) **[SS-11]**	1
—	0D07229A	Owner's Manual (Taiwan) **[SS-10]**	1
	0D07304A	Owner's Manual (Taiwan) **[SS-11]**	1
—	HA08122A	Main Remote Ass'y RES1-D1 **[SS-10]**	1
—	HA08277A	Main Remote Ass'y **[SS-11]**	1
—	0D07233A	Speaker Cable 15m	2
—	0D07238A	AC Cord (USA, CAN)	3
—	0D07239A	AC Cord (EP)	3
—	0D07240A	AC Cord (OTR, DA, TW)	3
—	0D07241A	AC Cord (JPN)	3
—	0D07242A	AC Cord (UK, HK, ML)	3
—	0D07243A	AC Cord (CH)	3
—	0D07244A	AC Cord (KR)	3
—	0D07245A	AC Cord (AUS)	3
—	0F03467A	Poly Bag	1
—	0F04157A	Poly Bag	3
—	0F05568A	Poly Bag	1
—	0H08216A	CD Single Adaptor (JPN)	1
—	0H08413C	Cable Holder	1
—	DA05449A	Screw Ass'y	1
—	DG05310A	Remote Control Sub Ass'y SS-5	1

(2) For SP1 (Subwoofer L, Center, Rear L/R Speakers) [SS-10/11]

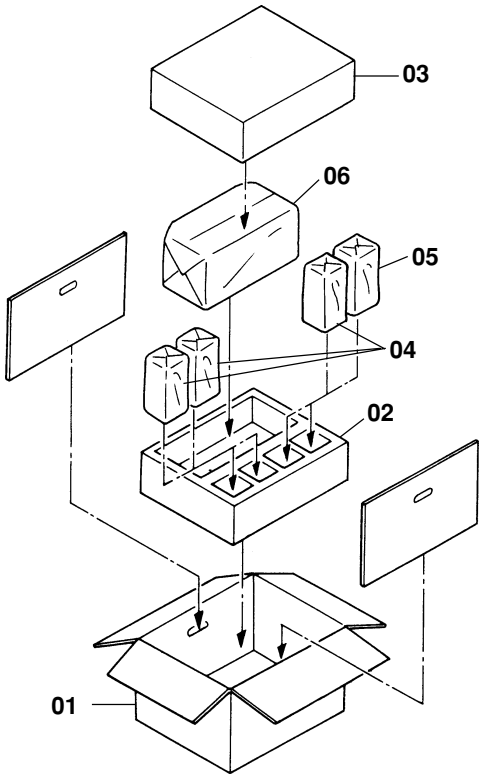

Fig. 1.7 SP1 [SS-10/11]

Schematic Ref. No.	Part No.	Description	Q'ty
	—	**Package & Accessory Ass'y (SP1) [SS-10/11]**	
01	0F05499B	Carton Box S355SP1 **[SS-10]**	1
	0F05570A	Carton Box S360SP1 **[SS-11]**	1
02	0F05501A	Packing Bottom S355SP1	1
03	0F05500A	Packing Top S355SP1	1
04	0F05541A	Soft Bag Satellite	3
05	2J00218B	Bracket Wall A	1
	2J00219C	Bracket Wall B	1
06	0F05540A	Soft Sheet Woofer	1
—	0F05516A	Air Cap Center Speaker Bracket	1
—	0F05518A	Center Speaker Bracket Spacer	1

(3) For SP2 (Subwoofer R, Front L/R Speakers) [SS-10/11]

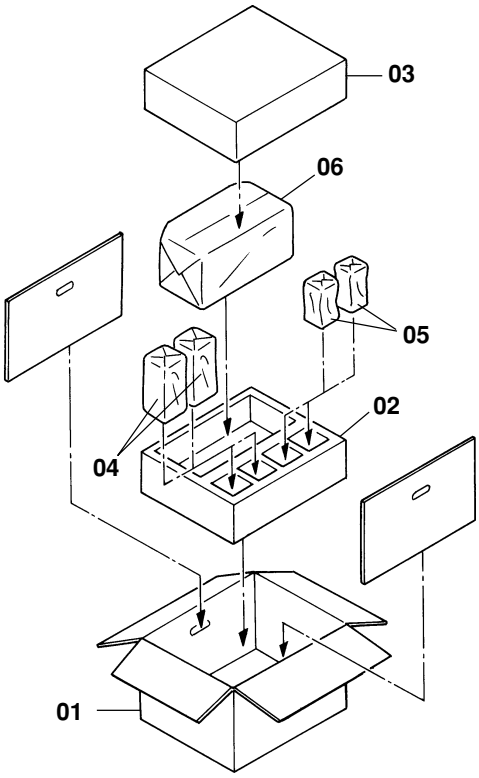

Fig. 1.8 SP2 [SS-10/11]

Schematic Ref. No.	Part No.	Description	Q'ty
	—	**Package & Accessory Ass'y (SP2) [SS-10/11]**	
01	0F05493B	Carton Box S356SP2 **[SS-10]**	1
	0F05571A	Carton Box S361SP2 **[SS-11]**	1
02	0F05501A	Packing Bottom S355SP1	1
03	0F05500A	Packing Top S355SP1	1
04	0F05541A	Soft Bag Satellite	2
05	0F05517A	Soft Bag Speaker Stand	2
06	0F05540A	Soft Sheet Woofer	1
—	0F05515A	Satellite Stand Spacer	2
—	0J08411A	Stand Spacer S	8
—	CB00648A	Stand Ass'y Satellite (For Front L/R Speakers)	2
—	DA05420A	Screw Ass'y S356	1
—	DA05421A	Spacer Ass'y S356	1

1.6.2. Package Ass'y and Accessory Ass'y [SS-21]
(1) Main Unit [SS-21]

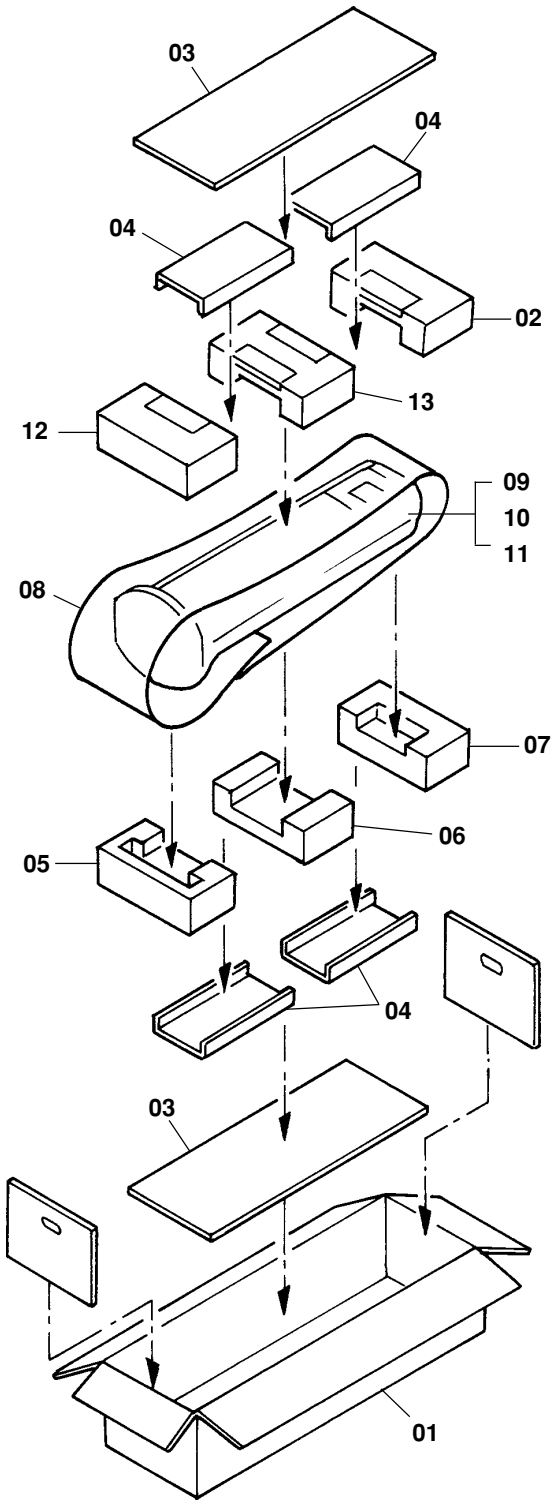

Fig. 1.9 Main Unit [SS-21]

Schematic Ref. No.	Part No.	Description	Q'ty
	—	**Package Ass'y (Main Unit) [SS-21]**	
01	0F05544A	Carton Box Center	1
02	0F05547B	Packing Top T Center	1
03	0F05590A	Carton Spacer T.B	2
04	0F05582A	Packing Spacer	4
05	0F05546B	Packing Bottom D Center	1
06	0F05577A	Packing Center D	1
07	0F05545B	Packing Bottom T Center	1
08	0F05588B	Soft Sheet	1
09	0F05565A	Door Protect Paper	1
10	0F05592A	Open Protect Paper	1
11	0F05604A	Wood Paper Center/Satellite	2
12	0F05548C	Packing Top D Center	1
13	0F05576B	Packing Center T	1
—	0J08641A	Spacer Tapping G	2

(2) A/V Tuner/Processor Unit [SS-21]

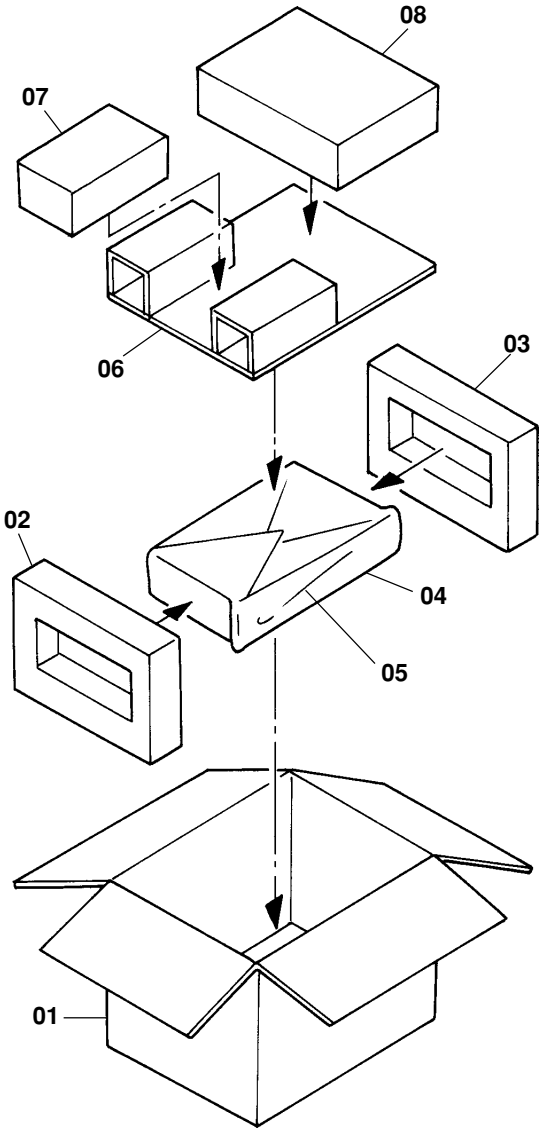

Fig. 1.10 A/V /Tuner/Processor Unit [SS-21]

Schematic Ref. No.	Part No.	Description	Q'ty
	—	**Package & Accessory Ass'y (A/V /Tuner/Processor Unit) [SS-21]**	
01	0F05550A	Carton Box	1
02	0F05551A	Packing L	1
03	0F05552A	Packing R	1
04	0F04458A	Sheet	1
05	0F05605A	Wood Paper HB	1
06	0F05553A	Carton Spacer	1
07	0F05533A	Remote Box	1
08	0F05489A	Accessory Box	1
—	0B85373A	3.5 Plug Cable	2
—	0B85375A	3P RCA Cable	1
—	0B85376A	4P RCA Cable	1
—	0B85377A	Digital Cable	1
—	0B85379A	S Video Cable	1
—	0B85381A	13P DIN Cable 5m L	1
—	0B85383A	13P DIN Cable 5m S	1
—	0B85512A	3.5 Plug Cable	2
—	0B85513A	3.5 Plug Cable	2
—	0B90462A	Battery UM4x1	2
—	0B90683A	Battery	6
—	0B90818A	AM Loop Antenna Ass'y	1
—	0B90819A	FM Indoor Antenna	1
—	0B90820A	Antenna Adaptor	1
—	0D06102B	Warranty Card EP (UK, EP)	1
—	0D06132A	USA Pack (JPN)	1
—	0D06522C	HA Warranty UL2(2) (USA, CAN)	1
—	0D06944C	HA Warranty DM1 (JPN)	1
—	0D07105A	Speaker Cable	3
—	0D07233A	Speaker Cable 15m	2
—	0D07238A	AC Cord (USA, CAN)	3
—	0D07239A	AC Cord (EP)	3
—	0D07240A	AC Cord (OTR, DA, TW)	3
—	0D07241A	AC Cord (JPN)	3
—	0D07242A	AC Cord (UK, HK, ML)	3
—	0D07243A	AC Cord (CH)	3
—	0D07244A	AC Cord (KR)	3
—	0D07245A	AC Cord (AUS)	3
—	0D07283A	Owner's manual (English)	1
—	0D07284A	Owner's Manual (French/Spanish)	1
—	0D07285A	Owner's Manual (Japanese)	1
—	0D07286A	Owner's Manual (English/French/German/Spanish/Italian)	1
—	0D07287A	Owner's Manual (China)	1
—	0D07288A	Owner's Manual (Taiwan)	1
—	0D07340A	Owner's Manual (Korean)	1
—	0H08216A	CD Single Adaptor (JPN)	1
—	0H08413C	Cable Holder	1
—	DG05310A	Remote Control Sub Ass'y SS-5	1
—	HA08183A	Main Remote Ass'y	1
—	0F05534A	Remote Box Spacer A	1
—	0F05535A	Remote Box Spacer B	1
—	0F05536A	Soft Bag Remote	1
—	0F05607A	Wood Paper Remote	1

(3) Subwoofer L (4ch) Unit [SS-21]

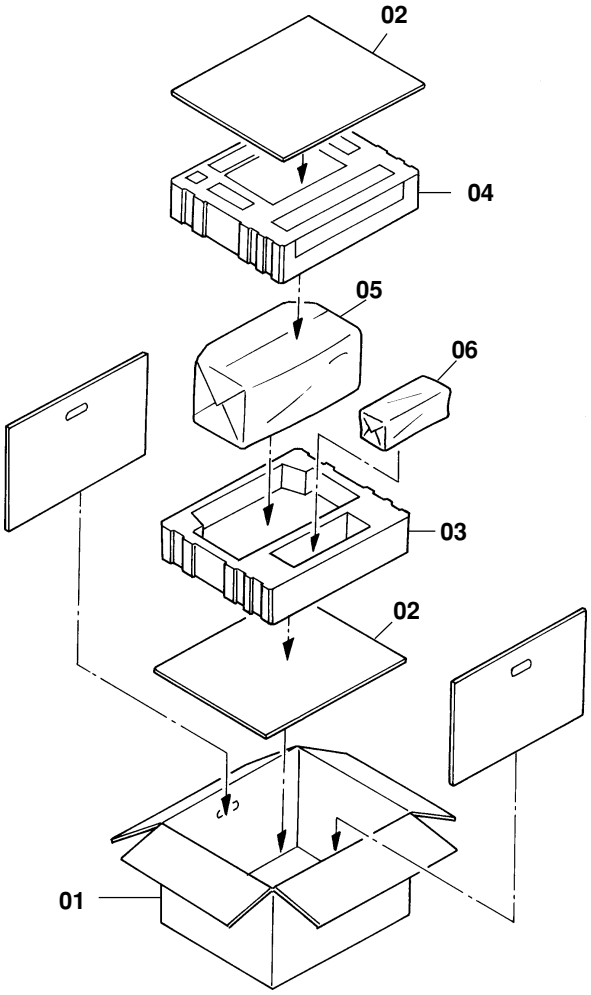

Fig. 1.11 Subwoofer L Unit [SS-21]

Schematic Ref. No.	Part No.	Description	Q'ty
	—	**Package & Accessory Ass'y (Subwoofer L Unit) [SS-21]**	
01	0F05561A	Carton Box	1
02	0F05602A	Packing Spacer	2
03	0F05563C	Packing Bottom	1
04	0F05564C	Packing Top	1
05	0F05540A	Soft Sheet Woofer	1
06	0F05541A	Soft Bag Satellite	1
—	0F05603A	Wood Paper SW	1
—	0F05606A	Wood Paper C.SP	1
—	0D07294A	Template Speaker	1
—	0D07295A	Template Bracket	1
—	DA05444A	Screw Ass'y	1
—	DA05445A	Spacer Ass'y	1

(4) Subwoofer R (3ch) Unit [SS-21]

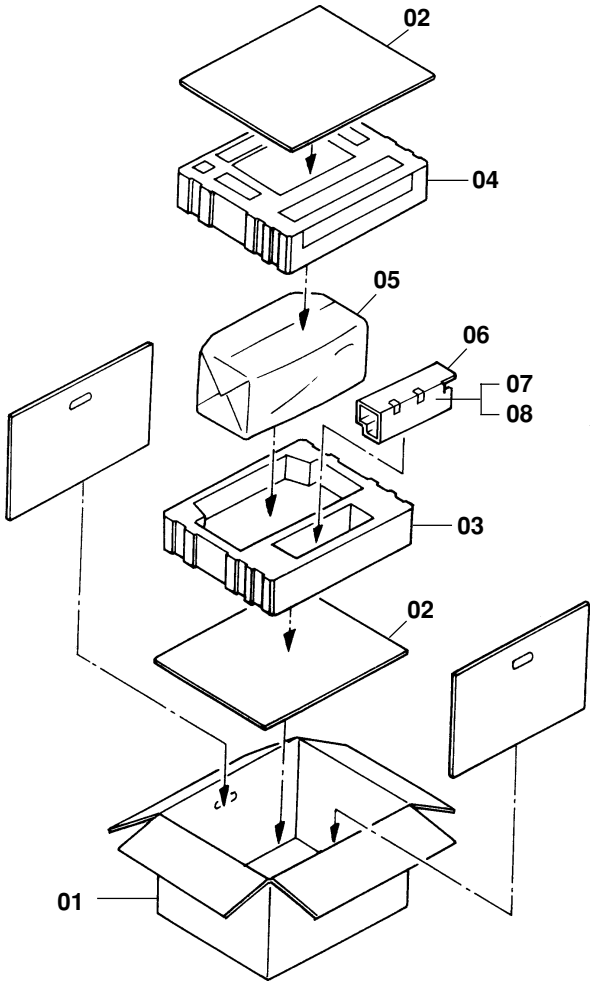

Fig. 1.12 Subwoofer R Unit [SS-21]

Schematic Ref. No.	Part No.	Description	Q'ty
	—	**Package & Accessory Ass'y (Subwoofer R Unit) [SS-21]**	
01	0F05562A	Carton Box	1
02	0F05602A	Packing Spacer	2
03	0F05563C	Packing Bottom	1
04	0F05564C	Packing Top	1
05	0F05540A	Soft Sheet Woofer	1
06	0F05518A	Center Speaker Bracket Spacer	1
07	2J00218B	Bracket Wall A	1
08	2J00219C	Bracket Wall B	1
—	0F05516A	Air Cap Center Speaker Bracket	1
—	0F05603A	Wood Paper SW	1

(5) Satellite Speaker Unit and Remote Control Unit [SS-21]

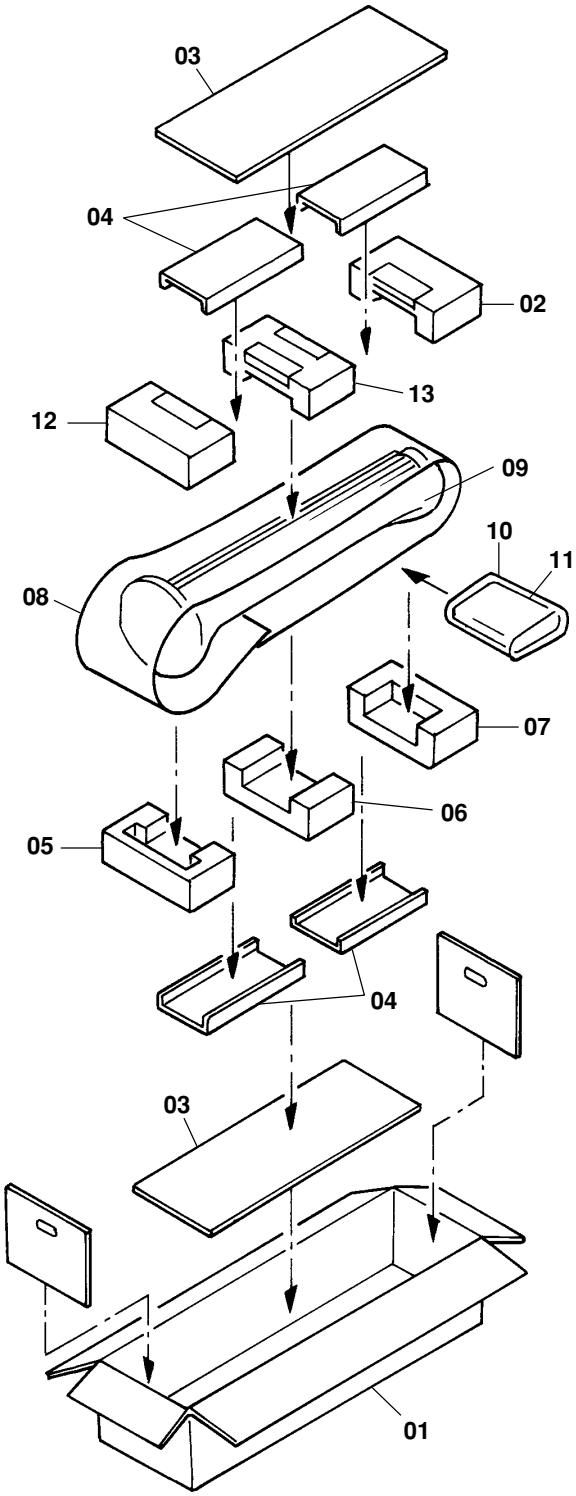

Fig. 1.13 Floor Speaker Unit [SS-21]

Schematic Ref. No.	Part No.	Description	Q'ty
	—	**Package Ass'y (Floor Speaker Unit) [SS-21]**	
01	0F05555A	Carton Box A 3/8	1
	0F05584A	Carton Box B 4/8	1
	0F05585A	Carton Box C 5/8	1
	0F05586A	Carton Box D 6/8	1
02	0F05558C	Packing Top T	1
03	0F05591A	Carton Spacer T.B	2
04	0F05583A	Packing Spacer	4
05	0F05557D	Packing Bottom D	1
06	0F05579B	Packing Center D	1
07	0F05556C	Packing Bottom T	1
08	0F05560B	Soft Sheet	1
09	0F05604A	Wood Paper Center/Satellite	2
10	0F05589A	SP Spacer Sheet	1
11	0F05581A	SP Packing Spacer	1
12	0F05559C	Packing Top D	1
13	0F05578B	Packing Center T	1

Transistor Shapes

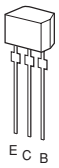

2SA733
2SA970BL
2SA1015
2SA1145
2SC945
2SC2240
2SC2705
2SC2878

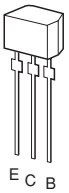

2SC2669

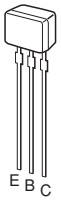

DTA114ES
DTA143ES
DTC114ES
DTC114TS
2SC2058S

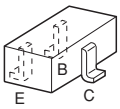

DTA114EK
DTA144EK
DTC114EK
DTC114TK
DTC144EK
DTC143TK
DTC314TK
DTC323TK
2SA1576S
2SC2412K
2SC4081S

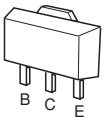

2SB1132
2SD2153

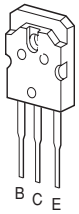

2SD1758

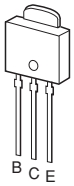

2SB1182

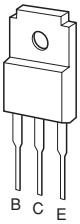

2SD1761

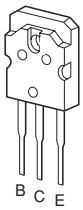

2SB1557
2SD2386

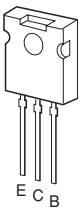

2SC3421

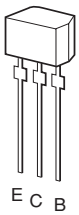

2SB1626
2SD2495

Main Unit

Main Unit Section
[SS-10/11/21]

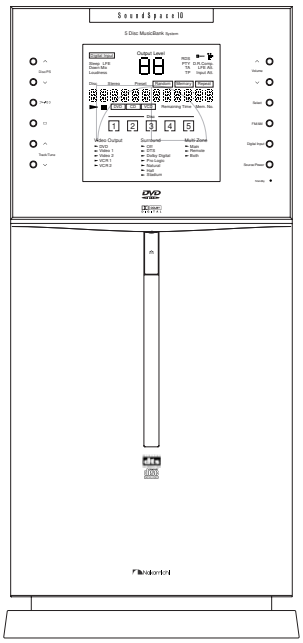

[SS-10/11]

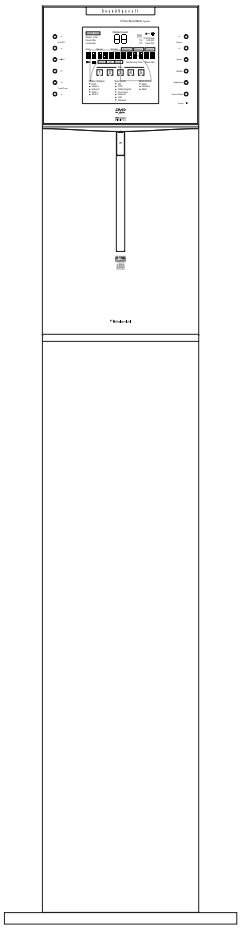

[SS-11]

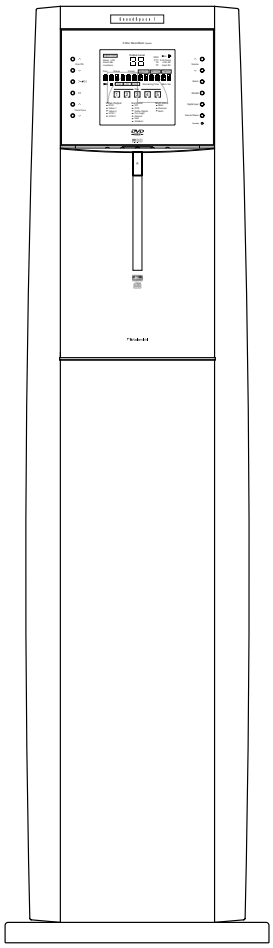

[SS-21]

CONTENTS

1. MEASUREMENT INSTRUMENTS AND JIGS

(1) DC Voltmeter
(2) AC Voltmeter
(3) Tracking Offset Meter LE-9055A or LTM-9055 (Leader Electronics Corp.)
(4) A-BEX Vertical Deviation Test Disc TDV-562 (DA09206A)
(5) SONY Test Disc Type 3

2. REMOVAL PROCEDURES

NOTES:

1. Do not use an electric screwdriver to disassemble or assemble the parts.
2. When reassembling, reverse the removal procedure. Follow the note for reassembling, if it is written.

2.1. Rear Cover Block

Refer to Fig. 2.1.

(1) Remove the Main Jack Cover "**1**" by sliding it.
(2) Remove the 6 screws "**2**" (PT3x10 + Truss) and 2 screws "**3**" (ST3x6 + Binding (Black)), and open the Rear Cover block.
(3) Disconnect the connector "**4**" from the OTP P.C.B. Ass'y in the Rear Cover Block, and remove the Rear Cover block.

● Note when reassembling:
When reassembling the Rear Cover, do not excessively tighten the screws "**2**".

2.2. Lid Drive Ass'y

Refer to Fig. 2.1.

(1) Remove the Rear Cover Block. See item 2.1.
(2) Cut the Insu-lock which fixes the cables to the Main Chassis Top, and disconnect the connectors "a", "b" and "c" from the Main P.C.B. Ass'y.
(3) Remove the 6 screws "**5**" to detach the Lid Drive Ass'y.

● Note when reassembling:
When binding the cables with an Insu-lock, be sure that they are binded with slack and not tightly binded.
The lead wire of the Lid Drive Motor can be cut it is has not enough slack.

2.3. Door & Mechanism Ass'y

Refer to Fig. 2.1.

(1) Remove the Lid Drive Ass'y. See item 2.2.
(2) Remove the 10 screws "**6**" (PT3x8 + Binding (Black)) and 4 screws "**7**" (ST3x5 + Binding), and detach the Main Chassis Top.
(3) Remove the 4 screws "**8**" (ST2.6x4 + Binding) and detach "**9**" (Shaft Holder, 2 pcs.), "**10**" (Lid Drive Pinion, 2 pcs.) and "**11**" (Lid Drive Shaft).
    ● Note when reassembling:
    Shaft Holder "**9**" has two projections on both sides. The shorter projection should be positioned inward.
(4) Remove the 2 screws "**12**" (M2x3 + Pan (Black)) and detach the Sen P.C.B. Ass'y.
    ● Note when reassembling:
    Handle the Sen P.C.B. Ass'y carefully, since applying excessive force to the wire soldering part can damage the Sen P.C.B. Ass'y.
(5) Remove the 8 screws "**13**" (ST3x5 + Binding), and, while lifting the Main Chassis, disconnect the 1 connector and Flexible wires "d", "e", and "f" from the Main P.C.B. Ass'y. Then, remove the Main Chassis and the Main P.C.B. Ass'y together.
(6) Remove the Escutcheon Center Ass'y from the Door & Mechanism Ass'y.
    ● Note when reassembling:
    When reassembling the Escutcheon Center Ass'y, insert the end of Tension Spring L/R into the holes "**A**" in the Escutcheon Center Ass'y.

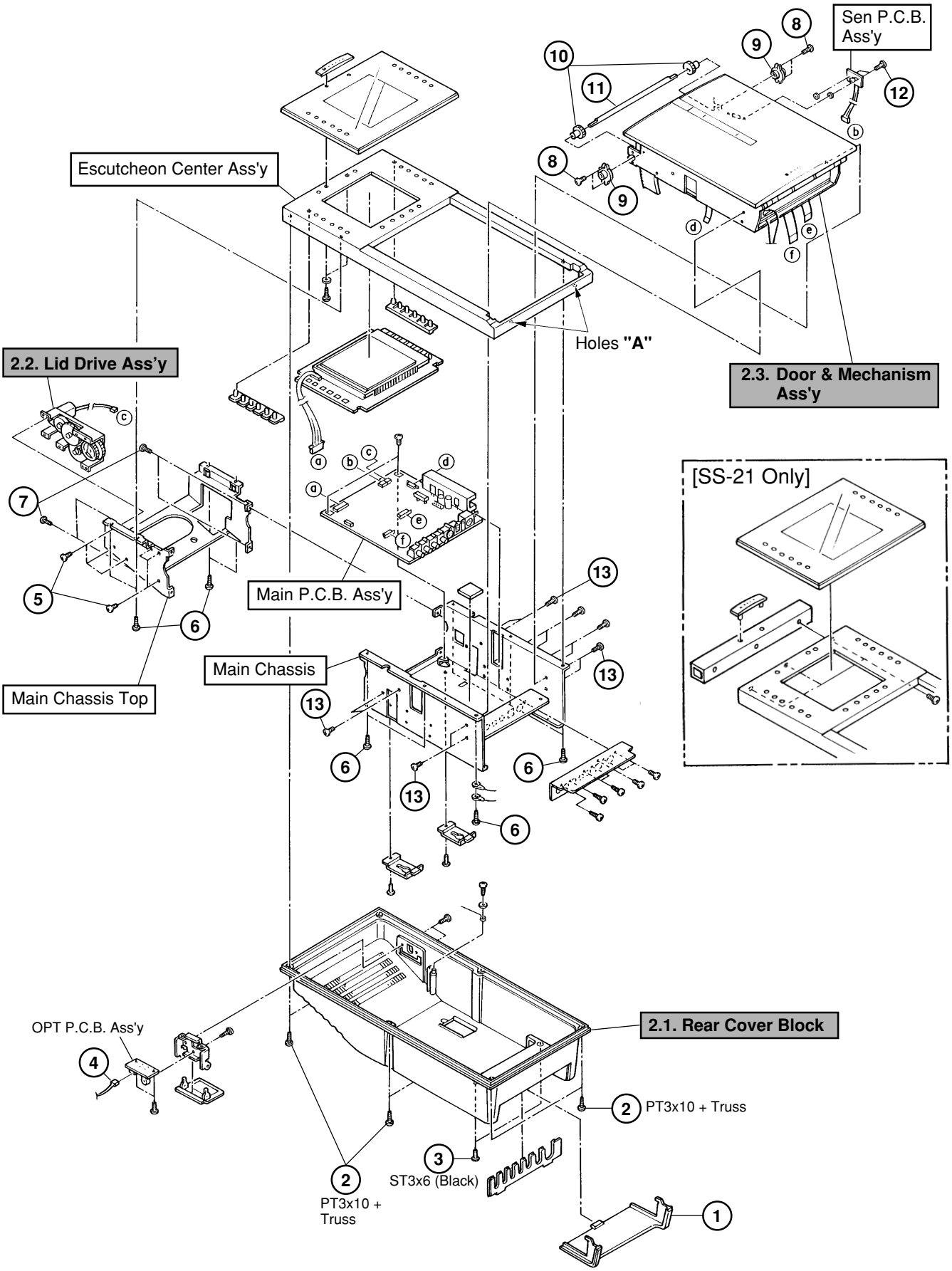
Sen P.C.B. Ass'y
Escutcheon Center Ass'y
Holes "A"
2.2. Lid Drive Ass'y
2.3. Door & Mechanism Ass'y
[SS-21 Only]
Main P.C.B. Ass'y
Main Chassis
Main Chassis Top
OPT P.C.B. Ass'y
2.1. Rear Cover Block
PT3x10 + Truss
ST3x6 (Black)
PT3x10 + Truss

Fig. 2.1

2.4. DVD Main P.C.B. Ass'y

Refer to Fig. 2.2.

(1) Remove the Door & Mechanism Ass'y. See item 2.3.
(2) Turn over the Door Drive Chassis.
(3) Remove the 4 screws "**1**" (M3x5 + Binding) and the DVD Heat Sink "**2**", disconnect the two connectors "a" and "b" from the DVD Main P.C.B. Ass'y, and detach the DVD Main P.C.B. Ass'y.

2.5. Mechanism Ass'y

Refer to Fig. 2.2.

(1) Remove the DVD Main P.C.B. Ass'y. See item 2.4.
(2) Remove the 8 screws "**3**" (M3x8 + Binding 2A (PW)) and disconnect the Flexible Wire "**4**".
(3) Loosen (not remove) the two screws "**5**" (ST3x8 + Binding) to set free the Lid Drive Rack "**6**", and detach the Mechanism Ass'y.
(4) Gently peel off the Protective Tape (5 places) on the Bottom Cover of the Mechanism Ass'y. (The tapes will be reused. Keep them by sticking on the Bottom Cover.)

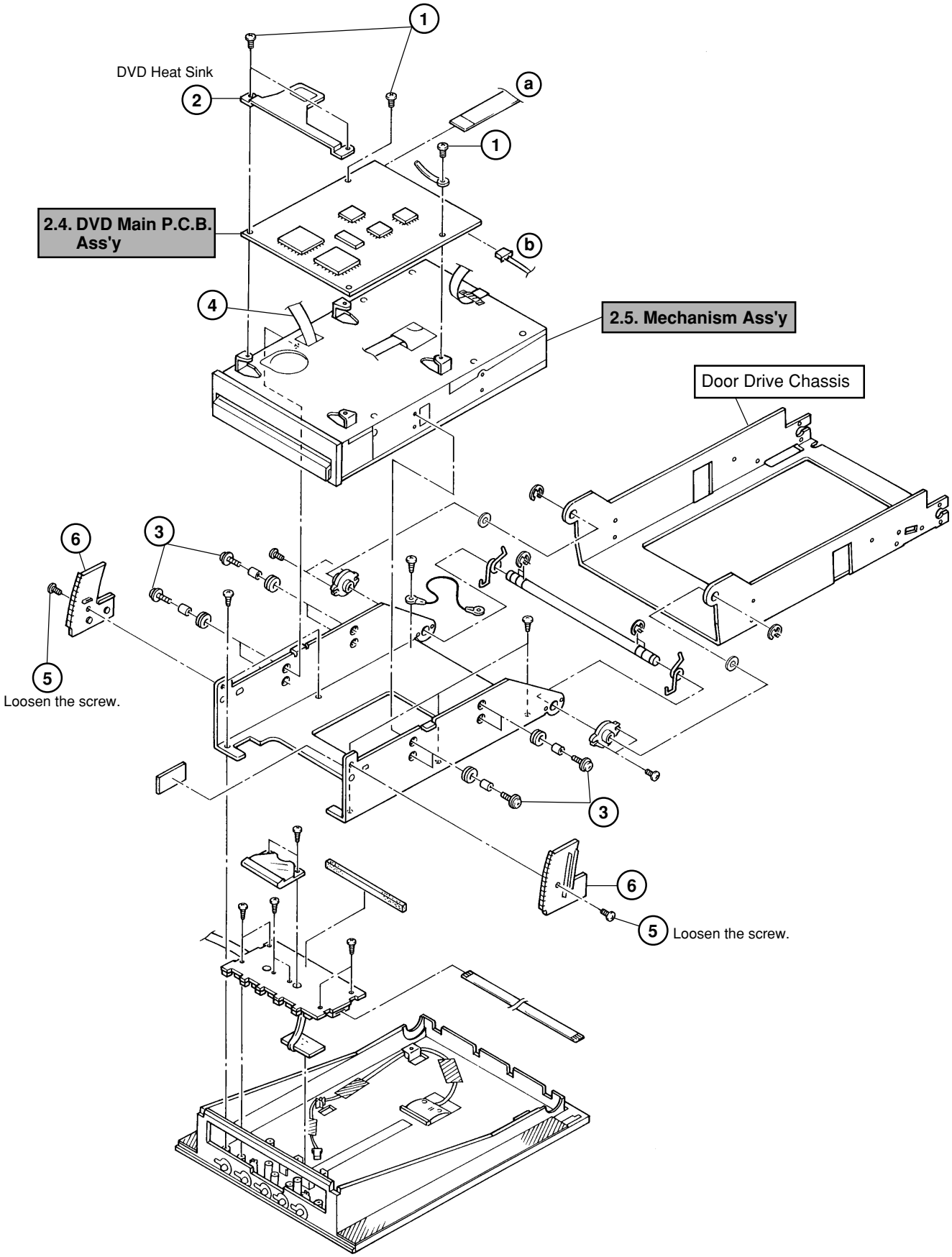
1
DVD Heat Sink
2
a
1
2.4. DVD Main P.C.B. Ass'y
b
4
2.5. Mechanism Ass'y
Door Drive Chassis
6
3
5
Loosen the screw.
3
6
5
Loosen the screw.

Fig. 2.2

2.6. Bottom Cover EX Ass'y, Top Cover EX Ass'y and F Panel EX Ass'y

Refer to Fig. 2.3.

(1) Remove the 6 screws "**1**" (M2.6x5 + Pan (#0 Type 3)) and detach the Bottom Cover EX Ass'y.

(2) Remove the 2 screws "**2**" (M2.6x3 + Pan), and detach the Top Cover EX Ass'y and F Panel EX Ass'y.

2.7. Mechanism P.C.B. Ass'y

Refer to Fig. 2.3.

(1) Remove the Bottom Cover EX Ass'y, Top Cover EX Ass'y and F Panel EX Ass'y. See item 2.6.

(2) Shorting the laser diode shorting land of the DVD Traverse Ass'y:
Short the laser diode shorting lands (2 places shown by the arrows) with a soldering iron before removing the Mechanism P.C.B. Ass'y.

Note: Use the soldering iron whose metal part is grounded or a ceramic soldering iron.

CAUTION: Do not disconnect the Flexible Cable from the connector P200 on the Mechanism P.C.B. Ass'y unless the laser shorting lands (2 places) are shorted.

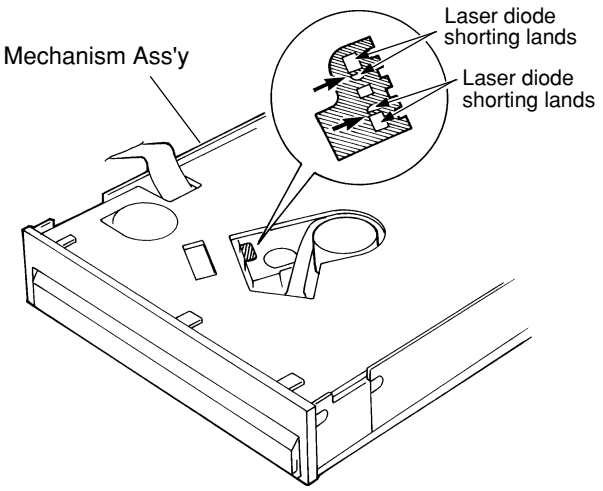

[Shorting the Laser Diode Shorting Lands of the DVD Traverse Ass'y]

● Note when reassembling:
Unsolder the laser diode shorting lands after reassembling the Mechanism P.C.B. Ass'y.

(3) Remove 1 screw "**3**" (M2.6x3.5 + Pan (#0 Type 3)) and 1 screw "**4**" (M2.6x8 + Pan).

(4) Disconnect the Mecha Flexible P.C.B. Ass'y "**5**" by pulling the edges of the connector CP103 "**6**" on the Mechanism P.C.B. Ass'y to unlock the connector edges.

(5) Pull the edges of the connector CN300 "**7**" on the Mechanism P.C.B. Ass'y to unlock the connector edges and carefully pull out the Traverse Flexible P.C.B. Ass'y.

(6) Pull the edges of the connector CN200 "**8**" on the Mechanism P.C.B. Ass'y to unlock the connector edges and carefully pull out the Pickup Flexible P.C.B. "**9**".

(7) Carefully disconnect the 3 connectors CP104 "**10**" (EX Motor Ass'y), CN500 "**11**" (Sled Motor Ass'y), and CN600 "**12**" (Inner Switch).

(8) Remove the Mechanism P.C.B. Ass'y from the Mechanism Ass'y.

2.8. Loading EX Ass'y

Refer to Fig. 2.3.

(1) Remove the Mechanism P.C.B. Ass'y. See item 2.7.

(2) Remove the 6 screws "**13**" (ST2.6x3 + Pan (#0 Type 3)), 1 screw "**14**" (M1.7x2.5 + Pan (#0 Type 3) (Black)), and 4 screws "**15**" (M2x2 + Pan (#0 Type 3) (Black)).

● Note when reassembling:
When reassembling the Mecha Flexible P.C.B. Ass'y "**5**", move it front side.
Be sure that the shutter is positioned in the center of the shutter sensor on the Mecha Flexible P.C.B. Ass'y, when the shutter of the Loading EX Ass'y is closed by hand,

(3) Remove the EX Loading Chassis block "16" backward while lifting its right side a little.

(4) Remove the Loading EX Ass'y while lifting it.

Note: Do not damage the Catch Arm Ass'y and the Loading Link Ass'y of the Loading EX Ass'y.

2.9. DVD Traverse Ass'y

Refer to Fig. 2.3.

(1) Remove the Loading EX Ass'y. See item 2.8.

(2) Remove the 3 screws "**17**" (ST2.6x3 + Pan (#0 Type 3)) and remove the EX Motor Ass'y.

(3) Remove the 3 screws "**18**" (ST2.6x3 + Pan (#0 Type 3)) and remove the EX Chassis Ass'y.

(4) Remove the 4 pcs. of Damper Screw SL "**19**", 4 pcs. of and SUS Collar B "**20**", and 4 pcs. of SUS Collar T "**21**", and detach the DVD Traverse Ass'y.

Notes:

1. Pay attention so as not to damage the Door Sensor P.C.B. of the Mecha Flexible P.C.B. "**5**".
2. Assemble the Door Sensor P.C.B. so as not it is inclined.
3. Be sure that the projection of the Front Door Ass'y can be correctly inserted into the Door Sensor.

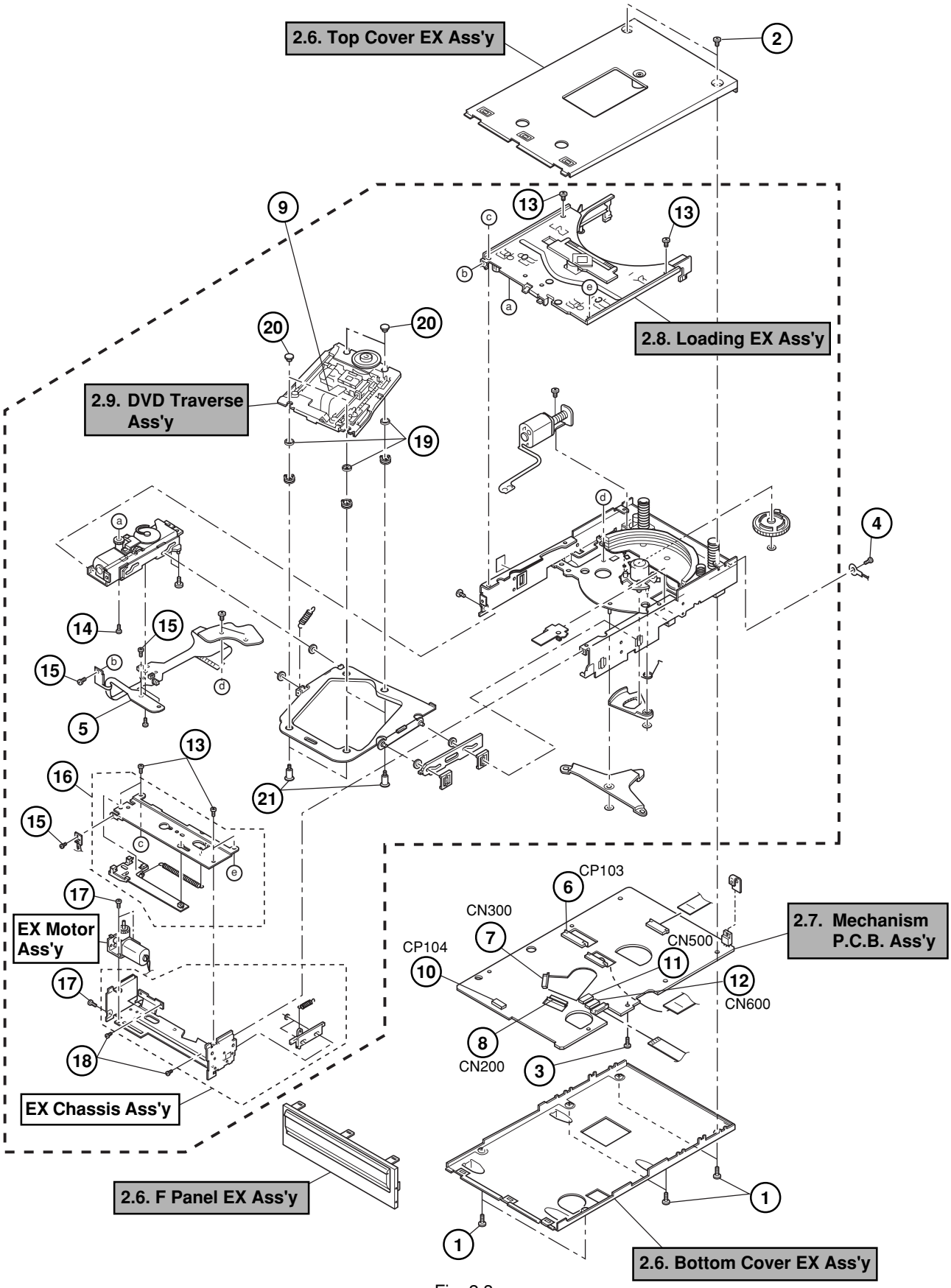
2.6. Top Cover EX Ass'y
2
9
13
13
c
b
a
e
2.8. Loading EX Ass'y
20
20
2.9. DVD Traverse Ass'y
19
d
4
a
14
15
15
b
d
5
13
16
21
15
c
e
17
EX Motor Ass'y
17
18
EX Chassis Ass'y
CP103
6
CN300
7
CP104
10
CN500
11
12
CN600
8
CN200
3
2.7. Mechanism P.C.B. Ass'y
2.6. F Panel EX Ass'y
1
1
2.6. Bottom Cover EX Ass'y

Fig. 2.3

3. ADJUSTMENTS

For Current Model

3.1. Adjustments for Current Model

How to Distinguish the Current DVD Main P.C.B. Ass'y (M3C1):
Distinguish the current DVD Main P.C.B. Ass'y by looking at the letter "M3" labeled on the P.C.B. (If "C3" is found, it is the former one.)

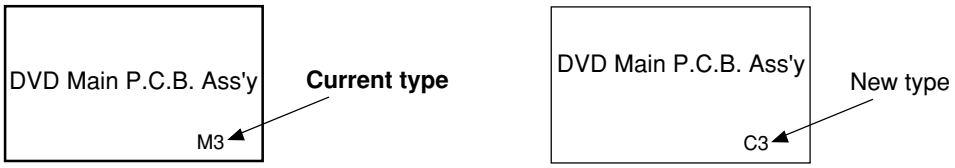

3.1.1. Parts Location for Adjustments

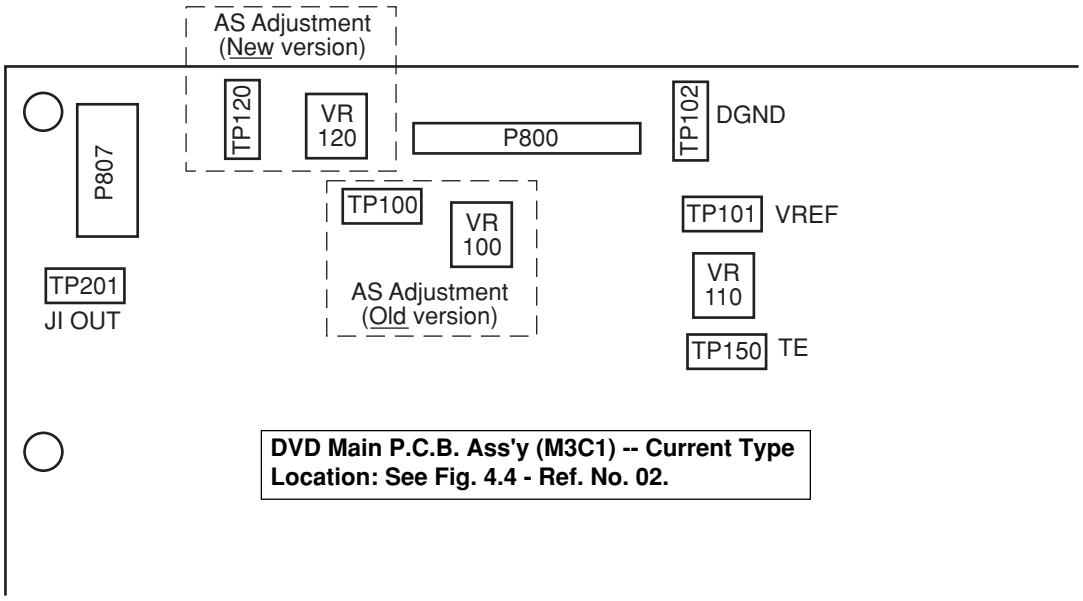

Fig. 3.1.1 Parts Location for Electrical Adjustment (For Current Models)

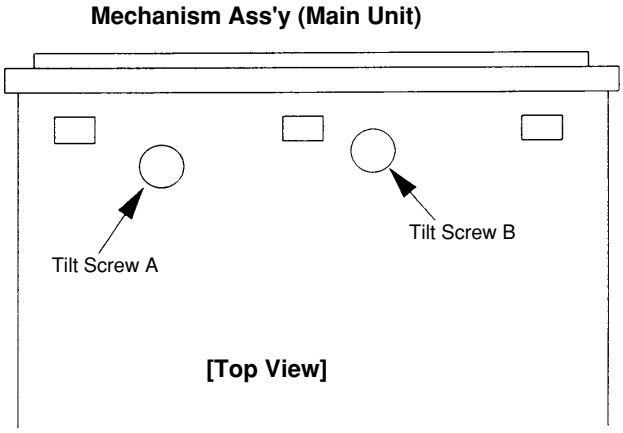

Fig. 3.1.2 Tilt Adjustment Screws (For Current Model)

For Current Model

3.1.2. Adjustment Procedure

NOTE: Follow the next steps in order.

STEP	ITEM	SIGNAL SOURCE	OUTPUT CONNECTION	ADJUST-MENT	REMARKS
1	Entering DVD Adjust Mode				1. Connect each measuring instrument as follows: • Connect a DC voltmeter between TP120 (or TP100) (+ terminal) and TP102 (DGND) (- terminal) on the DVD Main P.C.B. Ass'y. • Connect an AC voltmeter between TP201 (JI OUT) (+ terminal) and TP102 (DGND) (- terminal) on the DVD Main P.C.B. Ass'y. • Connect a tracking offset meter between TP150 (+ terminal) and TP101 (VREF) (- terminal) on the DVD Main P.C.B. Ass'y. 2. Connect the Main unit to the A/V Tuner/Processor unit. 3. Turn on the **A/V Tuner/Processor unit** by pushing its **POWER** switch. 4. Press the **POWER** key on the **Main unit** for more than 2 seconds. Then, the Standby indicator lights up and the Main unit enters Standby mode. 5. While pressing and holding the **SELECT** key on the Main unit, press the **PLAY/PAUSE** key for more than 2 seconds. Be sure that the following message appears on the display of the Main unit. **DVD ADJUST**
2	AS Adjustment	—	● New Version DC Voltmeter between TP120 (+) and TP102 (DGND) (-) on DVD Main P.C.B.	VR120	1. Press the **STOP** key once. The message will change as follows: → **AS ADJUST** → **DVD LD ON** 2. Note the reading on the DC voltmeter. (**Vdvd**) 3. Press the **TRACK UP** (∧) key once. The following message will appear on the display. **CD LD ON** 4. Note the reading on the DC voltmeter. (**Vcd**) 5. Be sure that the value "Vcd — Vdvd" is as follow: **Vcd — Vdvd = 50 mV ± 10 mV DC** Vcd: Value in step 4 Vdvd: Value in step 2 6. If not, while displaying "DVD LD ON", adjust **VR120 (or VR100)** until the value "Vcd — Vdvd" is within above range. You can switch over "DVD LD ON" and "CD LD ON" as follows: • Pressing the **TRACK DOWN** (V) key changes the display from "CD LD ON" to "DVD LD ON". • Pressing the **TRACK UP** ( ) key will return the display to "CD LD ON". (to be continued)
			● Old Version DC Voltmeter between TP100 (+) and TP102 (DGND) (-) on DVD Main P.C.B.	VR100	

For Current Model

STEP	ITEM	SIGNAL SOURCE	OUTPUT CONNECTION	ADJUST-MENT	REMARKS
					7. Press the **TRACK UP** (Λ) key until the following message appears on the display. **LD OFF** The pickup will move to the innermost position and then stops there. ***Caution:*** *DO NOT use the TRACK DOWN (V) key to set "LD OFF", since the pickup cannot move to the innermost position. If this is done, the pickup will be damaged when you insert the test disc.* 8. Proceed to the next step.
3	Tilt Adjustment	DVD Vertical Deviation Test Disc TDV-562 (DA09206A)	AC Voltmeter between TP201 (JI OUT) (+) and TP102 (DGND) (-) on DVD Main P.C.B.	Tilt Screws A and B	1. Press the **STOP** key once. Be sure that the following message appears on the display. **MECHA ADJUST** 2. Press the **EJECT** key and insert the DVD test disc. 3. Press the **PLAY**/**PAUSE** key to play back the disc. 4. Press the **TRACK UP** (Λ) key to play back the Chapter 16 (outermost track). 5. Press the **PLAY**/**PAUSE** key to pause the disc. (The disc will keep turning.) 6. Turn the **Screw A** to obtain minimum reading on the AC voltmeter. 7. Turn the **Screw B** to obtain minimum reading on the AC voltmeter. 8. Repeat steps **6** and **7** several times until minimum readings are obtained. 9. Press the **EJECT** key to eject the disc. 10. Proceed to the next step.
4	CD Tracking Adjustment	CD Test Disc SONY Type 3	Tracking Offset Meter between TP150 (+) and TP101 (VREF) (-) on DVD Main P.C.B.	VR110	1. Set the tracking offset meter as follows: • Sensitivity switch: HIGH (right side) • Level switch: MEASURE (left side) • Center switch: MEASURE (center position) 2. Insert the CD test disc. 3. Press the **STOP** key once. Be sure that the following message appears on the display. **CD ADJUST** 4. Adjust **VR110** so that the center meter indicates **0 V** as shown on the left. Also, be sure that the left side meter indicates around **1 V**. 5. Press the **EJECT** key to eject the disc. 6. Proceed to the next step to terminate the adjustment.

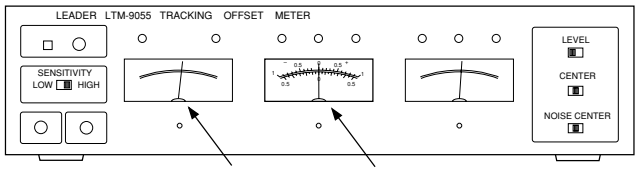

For Current Model

STEP	ITEM	SIGNAL SOURCE	OUTPUT CONNECTION	ADJUST-MENT	REMARKS
5	Termination				1. Press the **POWER** key on the **Main unit** for more than 2 seconds to enter Standby mode. 2. Press the **POWER** button on the **A/V Tuner/ Processor unit** to turn off the System. 3. Disconnect the measuring instruments. 4. Apply paint lock to the **Screws A** and **B**.

3.1.3. RAM Clear (System Controller & Mechanism Controller Clear)

NOTE: Before shipping perform the RAM Clear to perform the followings:
- To clear the usable setting values (such as tuner preset) to the initial setting values.
- To perform initialization operation of the changer mechanism

STEP	ITEM	SIGNAL SOURCE	OUTPUT CONNECTION	ADJUST-MENT	REMARKS
1	RAM Clear				1. Press the **POWER** key on the **Main unit** for more than 2 seconds to enter Standby mode. 2. Remove all discs. 3. Press and hold the **SELECT** and **STOP** buttons for more than 2 seconds. 4. The following messages will appear on the display. **RAM CLEAR 2** ↓ (After 5 seconds) **REGION x** (**x**: 0 to 8) 5. Then, the following operation will be done. • User setting values are reset to the initial setting values. • Changer mechanism is initialized. 6. "Power OFF" will be displayed and the system is automatically shut off. **POWER OFF** If the disc remains in the changer mechanism, power is not shut off and the display returns to the normal one.

For New Model

3.2. Adjustments for New Model

How to Distinguish the New DVD Main P.C.B. Ass'y (C3M1):
Distinguish the new DVD Main P.C.B. Ass'y by looking at the letter "C3" labeled on the P.C.B. (If "M3" is found, it is the former one.)

3.2.1. Parts Location for Adjustments

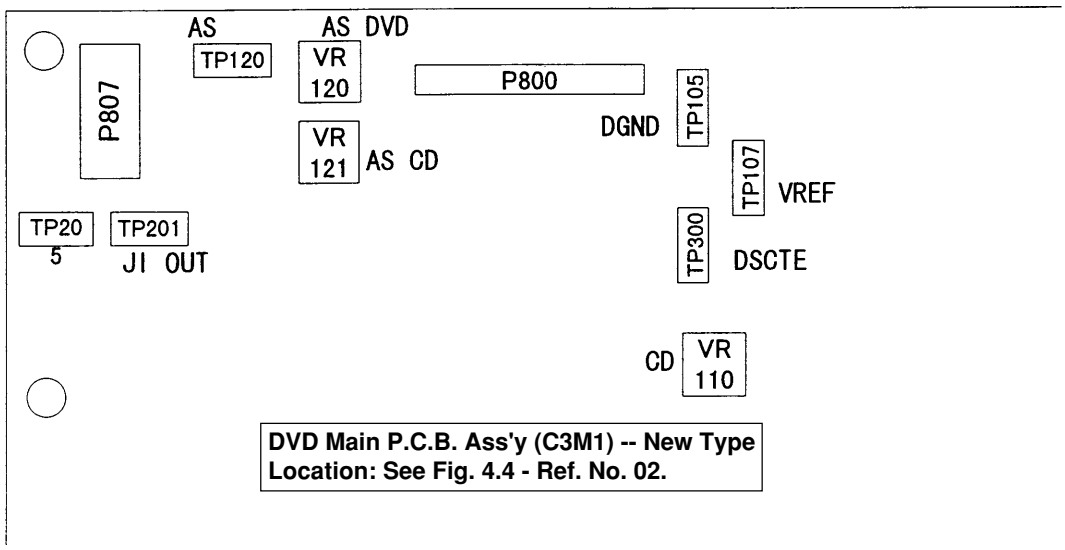

Fig. 3.2.1 Parts Location for Electrical Adjustment (For New Model)

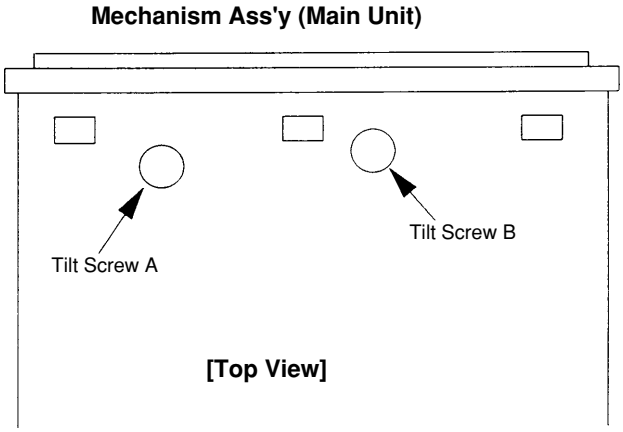

Fig. 3.2.2 Tilt Adjustment Screws (For New Model)

For New Model

3.2.2. Adjustment Procedure

NOTE: Follow the next steps in order.

STEP	ITEM	SIGNAL SOURCE	OUTPUT CONNECTION	ADJUST-MENT	REMARKS
1	Entering DVD Adjust Mode				1. Connect each measuring instrument as follows: • Connect a DC voltmeter between TP120 (AS) (+ terminal) and TP107 (VREF) (- terminal) on the DVD Main P.C.B. Ass'y. • Connect an AC voltmeter between TP201 (JI OUT) (+ terminal) and TP105 (DGND) (- terminal) on the DVD Main P.C.B. Ass'y. • Connect a tracking offset meter between TP300 (DSCTE) (+ terminal) and TP107 (VREF) (- terminal) on the DVD Main P.C.B. Ass'y. 2. Connect the Main unit to the A/V Tuner/Processor unit. 3. Turn on the **A/V Tuner/Processor unit** by pushing its **POWER** switch. 4. Press the **POWER** key on the **Main unit** for more than 2 seconds. Then, the Standby indicator lights up and the Main unit enters Standby mode. 5. While pressing and holding the **SELECT** key on the Main unit, press the **PLAY/PAUSE** key for more than 2 seconds. Be sure that the following message appears on the display of the Main unit. **DVD ADJUST**
2	AS Adjustment	—	DC Voltmeter between TP120 (AS) (+) and TP107 (VREF) (-) on DVD Main P.C.B.	VR121 (for CD LD) VR120 (for DVD LD)	**Note:** Perform the adjustment in the order of "CD LD ON" and "DVD LD ON" as mentioned below: 1. Press the **STOP** key once. The message will change as follows: → **AS ADJUST** → **DVD LD ON** 2. Press the **TRACK UP** (Λ) key once. The following message will appear on the display. **CD LD ON** 3. Adjust **VR121** to obtain **0V ± 10 mV DC** on the DC voltmeter. 4. Press the **TRACK UP** (Λ) key twice. The following message will appear on the display. **DVD LD ON** 5. Adjust **VR120** to obtain **0V ± 10 mV DC** on the DC voltmeter. (to be continued)

For New Model

STEP	ITEM	SIGNAL SOURCE	OUTPUT CONNECTION	ADJUST-MENT	REMARKS
					6. Press the **TRACK UP** (∧) key twice. The following message will appear on the display. **LD OFF** Then, the pickup will move to the innermost position and then stops there. ***Caution:*** *DO NOT use the TRACK DOWN (V) key to set "LD OFF", since the pickup cannot move to the innermost position. If this is done, the pickup will be damaged when you insert the test disc.* 7. Proceed to the next step.
3	Tilt Adjustment	DVD Vertical Deviation Test Disc TDV-562 (DA09206A)	AC Voltmeter between TP201 (JI OUT) (+) and TP105 (DGND) (-) on DVD Main P.C.B.	Tilt Screws A and B	1. Press the **STOP** key once. Be sure that the following message appears on the display. **MECHA ADJUST** 2. Press the **EJECT** key and insert the DVD test disc. 3. Press the **PLAY/PAUSE** key to play back the disc. 4. Press the **TRACK UP** (∧) key to play back the Chapter 16 (outermost track). 5. Press the **PLAY/PAUSE** key to pause the disc. (The disc will keep turning.) 6. Turn the **Screw A** to obtain minimum reading on the AC voltmeter. 7. Turn the **Screw B** to obtain minimum reading on the AC voltmeter. 8. Repeat steps **6** and **7** several times until minimum readings are obtained. 9. Press the **EJECT** key to eject the disc. 10. Proceed to the next step.
4	CD Tracking Adjustment	CD Test Disc SONY Type 3	Tracking Offset Meter between TP300 (DSCTE) (+) and TP107 (VREF) (-) on DVD Main P.C.B.	VR110	1. Set the tracking offset meter as follows: • Sensitivity switch: HIGH (right side) • Level switch: MEASURE (left side) • Center switch: MEASURE (center position) 2. Insert the CD test disc. 3. Press the **STOP** key once. Be sure that the following message appears on the display. **CD ADJUST** 4. Adjust **VR110** so that the center meter indicates **0 V** as shown on the left. Also, be sure that the left side meter indicates around **1 V**. 5. Press the **EJECT** key to eject the disc. 6. Proceed to the next step to terminate the adjustment.

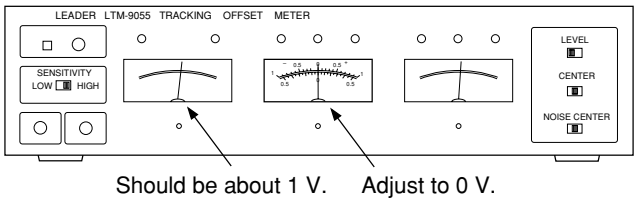

For New Model					
STEP	**ITEM**	**SIGNAL SOURCE**	**OUTPUT CONNECTION**	**ADJUST-MENT**	**REMARKS**
5	Termination				1. Press the **POWER** key on the **Main unit** for more than 2 seconds to enter Standby mode. 2. Press the **POWER** button on the **A/V Tuner/ Processor unit** to turn off the System. 3. Disconnect the measuring instruments. 4. Apply paint lock to the **Screws A** and **B**.

3.2.3. RAM Clear (System Controller & Mechanism Controller Clear)

NOTE: Before shipping perform the RAM Clear to perform the followings:
- To clear the usable setting values (such as tuner preset) to the initial setting values.
- To perform initialization operation of the changer mechanism

STEP	ITEM	SIGNAL SOURCE	OUTPUT CONNECTION	ADJUST-MENT	REMARKS
1	RAM Clear				1. Press the **POWER** key on the **Main unit** for more than 2 seconds to enter Standby mode. 2. Remove all discs. 3. Press and hold the **SELECT** and **STOP** buttons for more than 2 seconds. 4. The following messages will appear on the display. **RAM CLEAR 2** ↓ (After 5 seconds) **REGION x** (**x**: 0 to 8) 5. Then, the following operation will be done. • User setting values are reset to the initial setting values. • Changer mechanism is initialized. 6. "Power OFF" will be displayed and the system is automatically shut off. **POWER OFF** If the disc remains in the changer mechanism, power is not shut off and the display returns to the normal one.

4. MECHANISM ASS'Y AND PARTS LIST

4.1. Main Unit's Stand Ass'y

4.1.1. Main Unit's Stand Ass'y [SS-10/11]

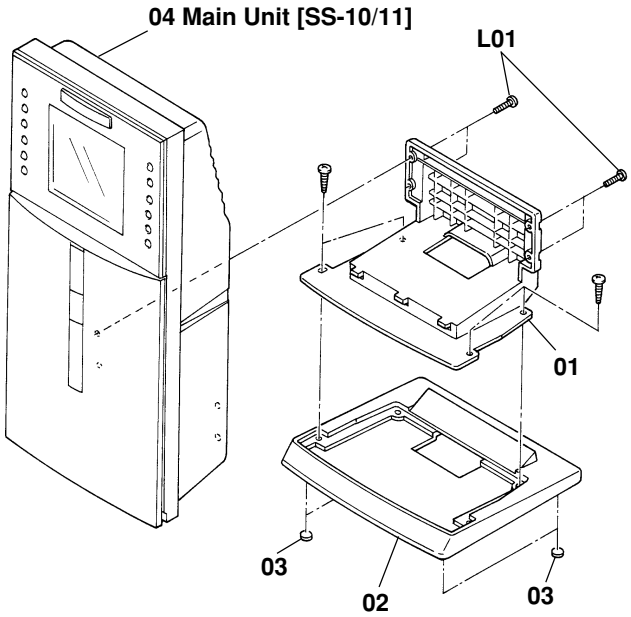

Fig. 4.1.1 SS-10/11

4.1.1. Main Unit's Stand Ass'y [SS-10/11]

Schematic Ref. No.	Part No.	Description	Q'ty
	HA08121A	**D Top Stand Ass'y [SS-10/11]**	**1**
01	0H08415D	Stand Set Holder	1
02	0H08464C	D Top Base CNT	1
03	0J08411A	Stand Spacer S	4
04	—	Main Unit [SS-10/11]	1
L01	0E04177A	PT4x12 + Binding (Black)	

4.1.2. Main Unit's Floor Stand Ass'y [SS-11 Only]

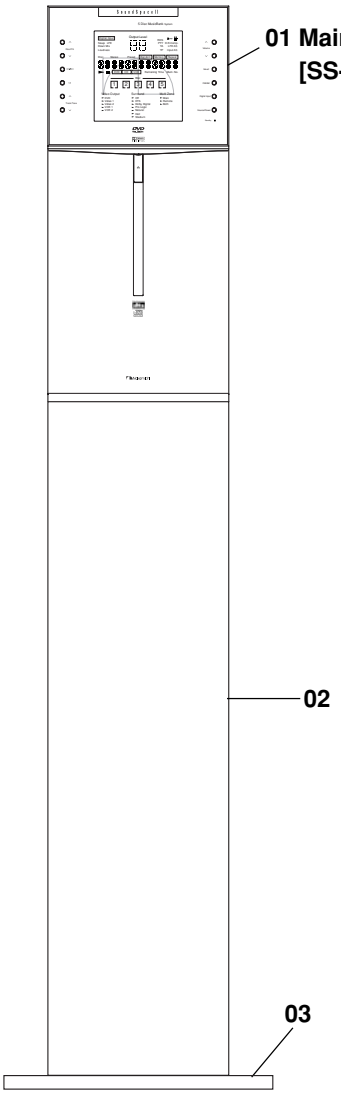

Fig. 4.1.2 SS-11

4.1.2. Main Unit's Floor Stand Ass'y [SS-11 Only]

Schematic Ref. No.	Part No.	Description	Q'ty
	—	**Floor Stand Ass'y N209 (For Main Unit) [SS-11]**	**1**
01	—	Main Unit [SS-10/11]	1
02	0H08466A	Stand Pole D202CNT	1
03	0H08465C	Stand Base D202CNT	1
—	0J08410A	Stand Spacer D202L	5
—	0H08415D	Stand Set Holder D202	1
L01	0E00852A	BT4x12 + Binding (Black)	

Schematic Ref. No.	Part No.	Description	Q'ty
	—	**Accessory Ass'y (Floor Stand) [SS-11]**	
—	0H08555A	Stand Cover D202SA (For Front L/R and Rear L/R Speakers)	4
—	DA05446A	Screw Ass'y N210 (For Front L/R and Rear L/R Speakers)	2
—	DA05428A	Screw Ass'y N209 (For Center Speaker)	1

4.1.3. Main Unit's Stand Ass'y [SS-21]

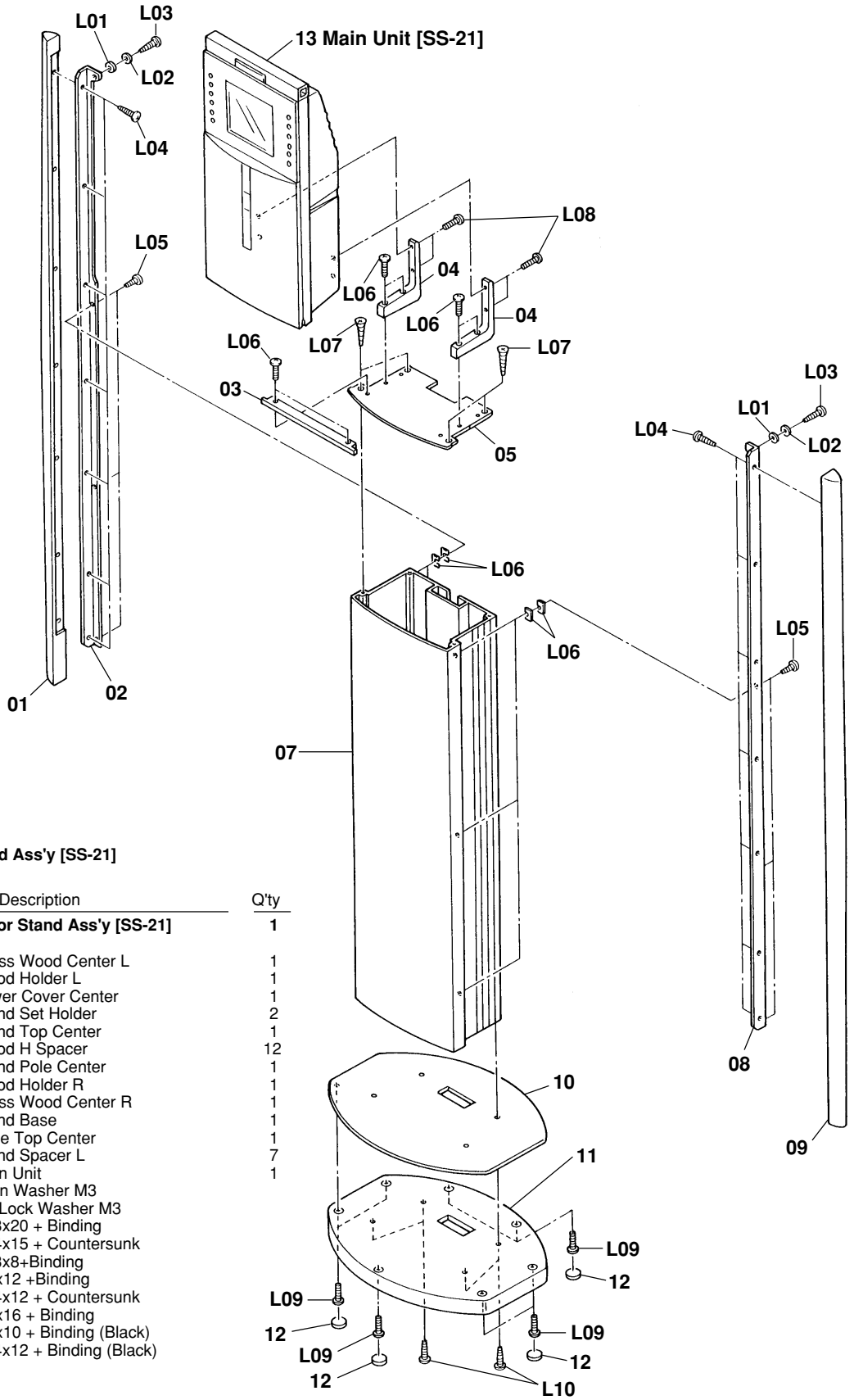

4.1.3. Main Unit's Floor Stand Ass'y [SS-21]

Schematic Ref. No.	Part No.	Description	Q'ty
	—	**Floor Stand Ass'y [SS-21]**	**1**
01	0H08518B	Dress Wood Center L	1
02	0H08520B	Wood Holder L	1
03	0H08575A	Lower Cover Center	1
04	0H08528B	Stand Set Holder	2
05	0H08527B	Stand Top Center	1
06	0J08488A	Wood H Spacer	12
07	0H08526B	Stand Pole Center	1
08	0H08521B	Wood Holder R	1
09	0H08519B	Dress Wood Center R	1
10	0H08525E	Stand Base	1
11	0H08576A	Base Top Center	1
12	0J08410A	Stand Spacer L	7
13	—	Main Unit	1
L01	0E04227A	Plain Washer M3	
L02	0E04228A	SP Lock Washer M3	
L03	0E04229A	PT3x20 + Binding	
L04	0E04230A	TP4x15 + Countersunk	
L05	0E03028A	BT3x8+Binding	
L06	0E03424A	M3x12 +Binding	
L07	0E04240A	BT4x12 + Countersunk	
L08	0E03265A	M3x16 + Binding	
L09	0E00953A	M4x10 + Binding (Black)	
L10	0E00852A	BT4x12 + Binding (Black)	

Fig. 4.1.3 SS-21

4.2. Synthesis (Main Unit)

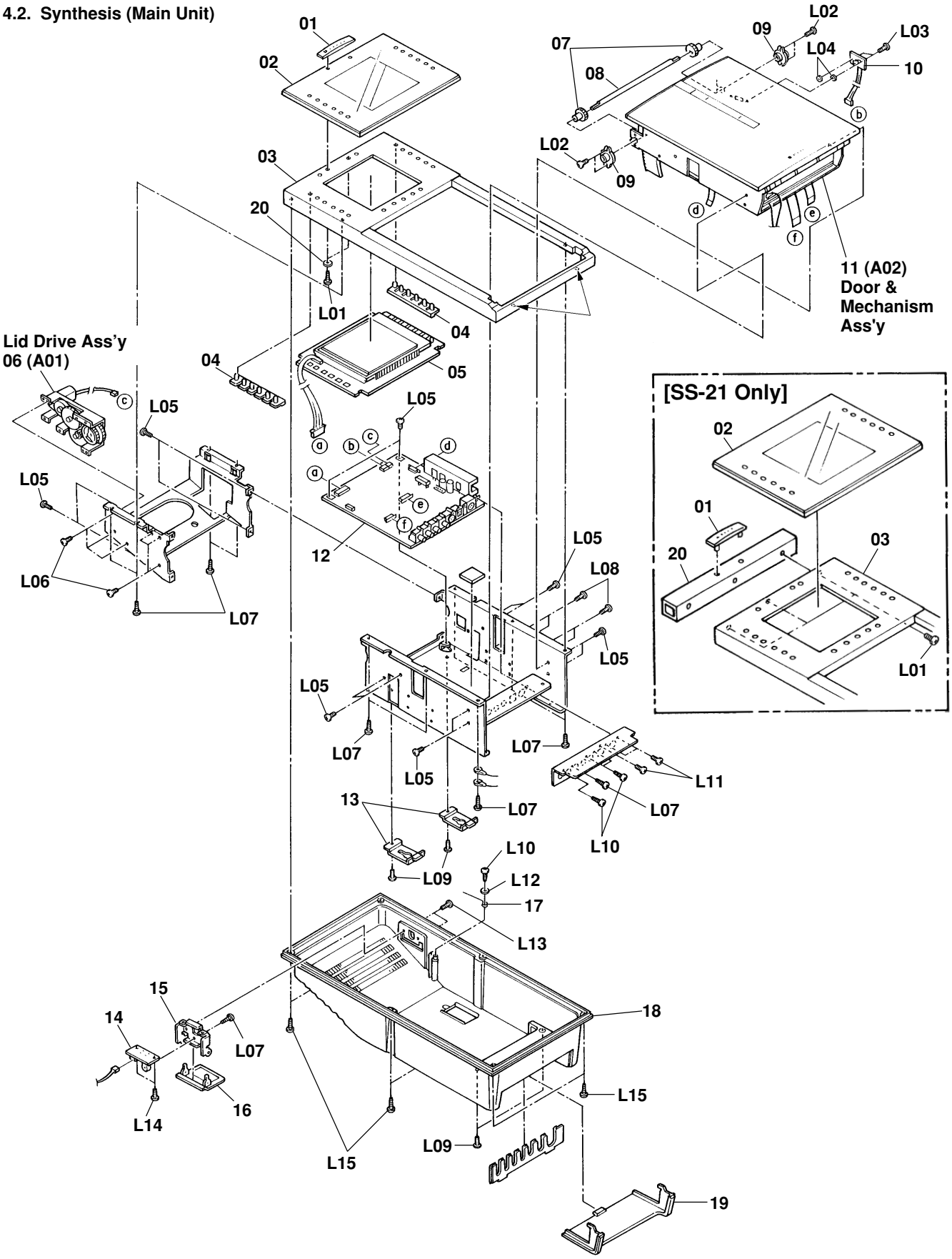

Fig. 4.2

4.2. Synthesis (Main Unit)

4.2.1. Synthesis (Main Unit) [SS-10/11]

Schematic Ref. No.	Part No.	Description	Q'ty
	—	**Synthesis (Main Unit) [SS-10/11]**	
01	0H08374C	Name Plate **[SS-10]**	1
	0H08558A	Name Plate **[SS-11]**	1
02	0H08373E	Dress Glass	1
03	0H08370F	Escutcheon Center	1
04	0H08379B	Button Control	2
05	BA10169A	LCD P.C.B. Ass'y	1
06	CA09396A	Lid Drive Ass'y	1
07	0C10338B	Lid Drive Pinion	2
08	0C10339B	Lid Drive Shaft	1
09	0J08363A	Shaft Holder	2
10	BA10174A	Sen P.C.B. Ass'y	1
11	—	Door & Mechanism Ass'y	1
12	BA10163A	Main P.C.B. Ass'y (JPN)	1
	BA10164A	Main P.C.B. Ass'y (DA, USA, CAN)	1
	BA10165A	Main P.C.B. Ass'y (UK, EP, AUS)	1
	BA10166A	Main P.C.B. Ass'y (OTR, CH, HK, ML)	1
	BA10167A	Main P.C.B. Ass'y (TW, KR)	1
13	0J08261B	Hook Plate	2
14	BA10173A	OPT P.C.B. Ass'y	1
15	0J08361C	Mini Jack Plate	1
16	0H08376C	Mini Jack Cover	1
17	0J08379B	Cover SP	1
18	0H08372D	Rear Cover	1
19	0H08375B	Main Jack Cover	1
20	0J08447A	Name Plate Spacer	2
L01	0E03814A	PT2x8 Binding (Black)	
L02	0E03573A	ST2.6x4 + Binding	
L03	0E00922A	M2x3 + Pan (Black)	
L04	0E04199A	Washer 2.5x4.3x0.188	
L05	0E00877A	ST3x5 + Binding	
L06	0E00791A	M2.6x6 + Binding	
L07	0E03749A	PT3x8 + Binding (Black)	
L08	0E00896A	M3x6 + Binding	
L09	0E03283A	ST3x6 + Binding (Black)	
L10	0E00921A	BT3x8 + Binding (Black)	
L11	0E03072A	M2.6x6 + Binding (Black)	
L12	0E00029A	Washer 2x6x0.4	
L13	0E04179A	ST3x6 + Flat Head (Black)	
L14	0E03669A	M2x4 + Binding	
L15	0E04133A	PT3x10 + Truss	

4.2.2. Synthesis (Main Unit) [SS-21]

Schematic Ref. No.	Part No.	Description	Q'ty
	—	**Synthesis (Main Unit) [SS-21]**	
01	0H08522B	Name Plate	1
02	0H08510B	Dress Glass	1
03	0H08543C	Escutcheon Center	1
04	0H08379B	Button Control	2
05	BA10169A	LCD P.C.B Ass'y	1
06	CA09396A	Lid Drive Ass'y	1
07	0C10338B	Lid Drive Pinion	2
08	0C10339B	Lid Drive Shaft	1
09	0J08363A	Shaft Holder	2
10	BA10174A	Sen P.C.B. Ass'y	1
11	—	Door & Mechanism Ass'y	1
12	BA10163A	Main P.C.B Ass'y (JPN)	1
	BA10164A	Main P.C.B Ass'y (USA, CAN, DA)	1
	BA10165A	Main P.C.B Ass'y (UK, SA, EP)	1
	BA10166A	Main P.C.B Ass'y (DU, CH, HK, ML)	1
	BA10167A	Main P.C.B Ass'y (KR, TW)	1
13	0J08261B	Hook Plate	2
14	BA10173A	OPT P.C.B. Ass'y	1
15	0J08361C	Mini Jack Plate	1
16	0H08376C	Mini Jack Cover	1
17	0J08379B	Cover SP	1
18	0H08372D	Rear Cover	1
19	0H08375B	Main Jack Cover	1
20	0H08523C	Dress Top Center	1
L01	0E00608A	M3x10 + Pan 3A	
L02	0E03573A	ST2.6x4 + Binding	
L03	0E00922A	M2x3 + Pan (Black)	
L04	0E04199A	Washer 2.5x4.3x0.188	
L05	0E00877A	ST3x5 + Binding	
L06	0E00791A	M2.6x6 + Binding	
L07	0E03749A	PT3x8 + Binding (Black)	
L08	0E00896A	M3x6 + Binding	
L09	0E03283A	ST3x6 + Binding (Black)	
L10	0E00921A	BT3x8 + Binding (Black)	
L11	0E03072A	M2.6x6 + Binding (Black)	
L12	0E00029A	Washer 2x6x 0.4	
L13	0E04179A	ST3x6 + Flat Head (Black)	
L14	0E03669A	M2x4 + Binding	
L15	0E04133A	PT3x10 + Trass	

4.3. Lid Drive Ass'y (A01)

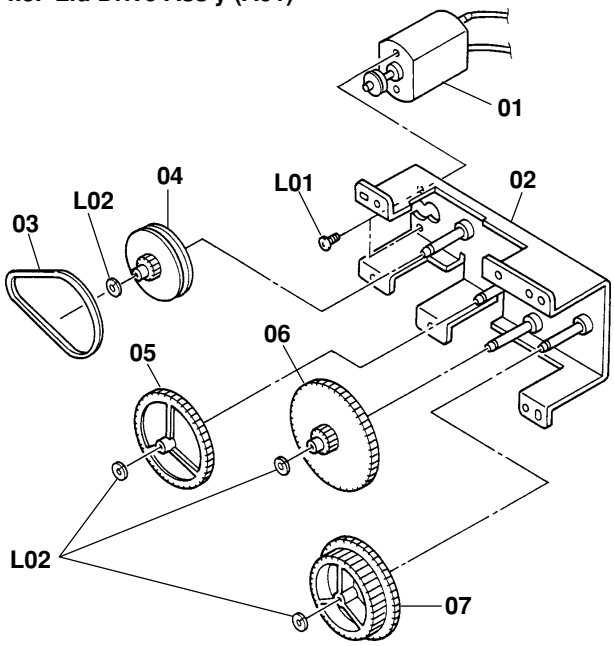

Fig. 4.3

4.3. Lid Drive Ass'y (A01)

Schematic Ref. No.	Part No.	Description	Q'ty
A01	**CA09396A**	**Lid Drive Ass'y**	**1**
01	CA09398A	Lid Drive Motor Ass'y	1
02	CA09397E	Lid Drive Chassis S Ass'y	1
03	0C10352A	Belt	1
04	0C10334B	Lid Drive Gear OM	1
05	0C10335C	Lid Drive Gear OE	1
06	0C10336C	Lid Drive Gear OP	1
07	0C10337C	Lid Drive Gear OB	1
L01	0E03953A	M2x2 + Pan (#0 Type 1)	
L02	0E04175B	Cut Washer 2.6x5x0.188	

4.4. Door & Mechanism Ass'y (A02)

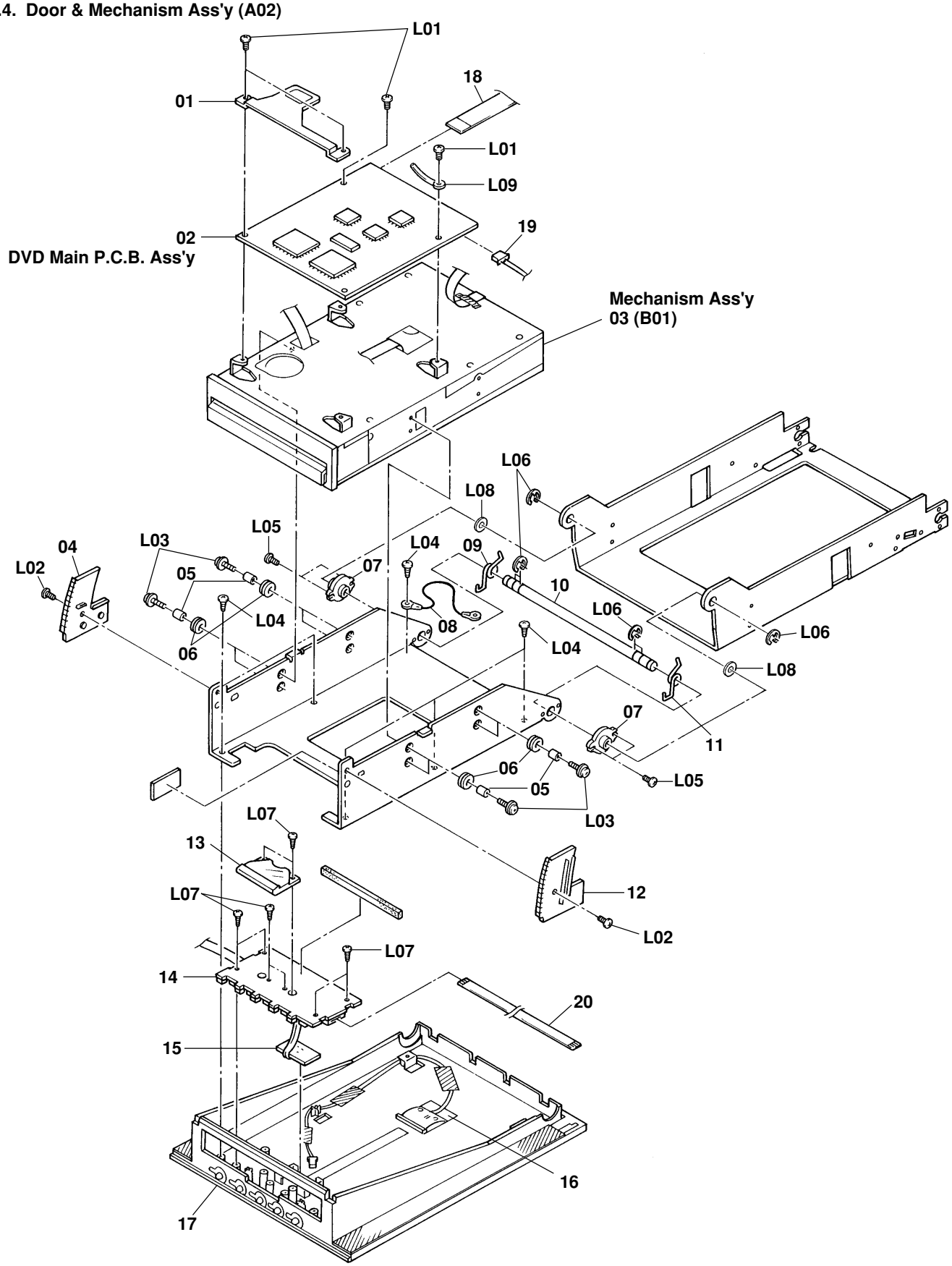

Fig. 4.4

4.4. Door & Mechanism Ass'y (A02)

4.4.1. Door & Mechanism Ass'y (A02) [SS-10/11]

Schematic Ref. No.	Part No.	Description	Q'ty
A02	**—**	**Door & Mechanism Ass'y [SS-10/11]**	**1**
01	0J08459A	DVD Heat Sink	1
02	BK10322A	DVD Main P.C.B. Ass'y (C3M1) [New]	1
	BG10107A	DVD Main P.C.B. Ass'y (M3C1) [Current] **(See Note below.)**	1
03	HA08001B	Mechanism Ass'y (M3C1) [Current]	1
	HA08661A	Mechanism Ass'y (C3M1) [New]	1
04	0C10341D	Lid Drive Rack R	1
05	0J08381A	Damper Collar	8
06	0J08380B	Mecha Damper	8
07	0J08363A	Shaft Holder	2
08	0B85493A	1P Wire GND D202	1
09	0J08367B	Tension Spring R	1
10	0J08365A	Door Fix Shaft	1
11	0J08366B	Tension Spring L	1
12	0C10340C	Lid Drive Rack L	1
13	0H08411A	Illumination Lens	1
14	BA10170A	SW P.C.B. Ass'y	1
15	BA10172A	REM P.C.B. Ass'y	1
16	BA10171A	LED P.C.B. Ass'y	1
17	HA08375A	Door Sub Ass'y Center (Except UK, EP)	1
	HA08376A	Door Sub Ass'y Center RDS (UK, EP)	1
18	0B85436A	24P Flexible Wire	1
19	0B85427A	6P Wire Ass'y Power	1
20	0B85433B	8P Flexible Wire	1
L01	0E00964A	M3x5 + Binding	
L02	0E03280A	ST3x8 + Binding	
L03	0E04176A	M3x8 + Binding 2A (PW)	
L04	0E03731A	PT3x8 + Binding	
L05	0E03203A	ST2.6x5 + Binding	
L06	0E00134A	E-Ring 4mm	
L07	0E03814A	PT2x8 Binding (Black)	
L08	0E04200B	Washer 7.6x12x0.5	
L09	0E03700B	Coating Clip	

4.4.2. Door & Mechanism Ass'y (A02) [SS-21]

Schematic Ref. No.	Part No.	Description	Q'ty
A02	**—**	**Door & Mechanism Ass'y [SS-21]**	**1**
01	0J08459A	DVD Heat Sink	1
02	BK10322A	DVD Main P.C.B Ass'y (C3M1) [New]	1
	BG10107A	DVD Main P.C.B. Ass'y (M3C1) [Current] **(See Note below.)**	1
03	HA08001B	Mechanism Ass'y (M3C1) [Current]	1
	HA08661A	Mechanism Ass'y (C3M1) [New]	1
04	0C10341D	Lid Drive Rack R	1
05	0J08381A	Damper Collar	8
06	0J08380B	Mecha Damper	8
07	0J08363A	Shaft Holder	4
08	0B85493A	1P WIRE GND D202	1
09	0J08367B	Tension Spring R	1
10	0J08365A	Door Flexible Shaft	1
11	0J08366B	Tension Spring L	1
12	0C10340C	Lid Drive Rack L	1
13	0H08411A	Illumination Lens	1
14	BA10170A	SW P.C.B Ass'y	1
15	BA10172A	REM P.C.B. Ass'y	1
16	BA10171A	LED P.C.B Ass'y	1
17	HA08375A	Door Sub Ass'y Center (Except UK, EP)	1
17	HA08376A	Door Sub Ass'y Center RDS (UK, EP)	1
18	0B85436A	24P Flexible Wire	1
19	0B85427A	6P Wire Ass'y Power	1
20	0B85433B	8P Flexible Wire	1
L01	0E00964A	M3x5 + Binding	
L02	0E03280A	ST3x8 + Binding	
L03	0E04176A	M3x8 + Binding 2A (PW)	
L04	0E03731A	PT3x8 + Binding	
L05	0E03203A	ST2.6x5 + Binding	
L06	0E00134A	E-Ring 4mm	
L07	0E03814A	PT2x8 Binding (Black)	
L08	0E04200B	Washer 7.6x12x0.5	
L09	0E03700B	Coating Clip	

Note for Ref. No. 02 (DVD Main P.C.B. Ass'y):
The current DVD Main P.C.B. Ass'y (M3C1) is not supplied. Therefore, you need to replace it with the new DVD Main P.C.B. Ass'y (C3M1).

When the current DVD Main P.C.B. Ass'y (M3C1) is need to replace with the new DVD Main P.C.B. Ass'y (C3M1), you need to also replace the Mechanism P.C.B. Ass'y with new one.

- How to distinguish the type:
  See the mark on the P.C.B. If it is "M3", the Main P.C.B. is the current one.

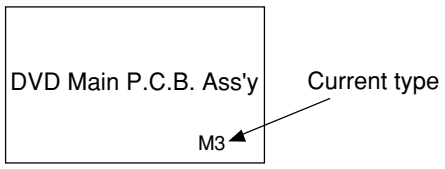

- Things to prepare:
  BG10251A DVD Main P.C.B. Ass'y (C3M1) [New] (For SS-10/11)
  BG10322A DVD Main P.C.B. Ass'y (C3M1) [New] (For SS-21)
  BA10323A Mechanism P.C.B. Ass'y (C3M1) [New] (Ref. No. 28 on page 1-24.)

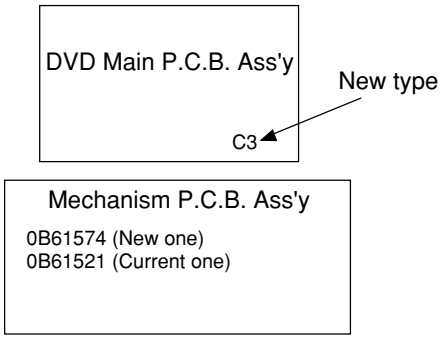

4.5. Mechanism Ass'y (B01)

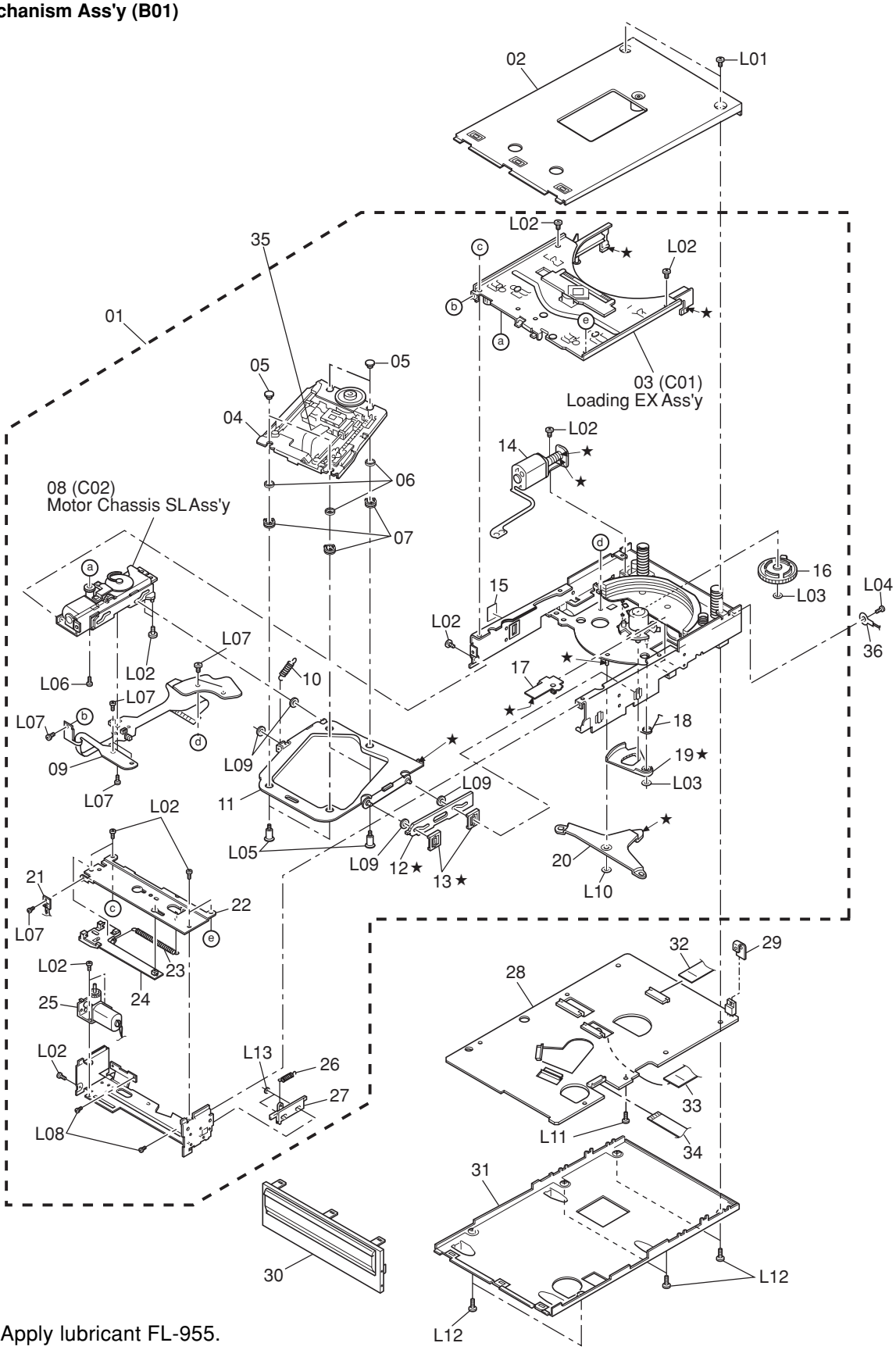

★: Apply lubricant FL-955.

Fig. 4.5

4.5. Mechanism Ass'y (A01)

Schematic Ref. No.	Part No.	Description	Q'ty
B01	**HA08001A**	**Mechanism Ass'y (M3C1) [Current]**	**1**
01	CG09399A	Mechanism Deck Ass'y	1
02	CA09393A	Top Cover EX Ass'y	1
03	CA09402A	Loading EX Ass'y	1
04	CG09401A	DVD Traverse Ass'y	1
05	0C10325B	SUS Collar T	4
06	0C10326A	SUS Collar B	4
07	0C10279A	Damper S SL	4
08	CA09415A	Motor Chassis EX Ass'y	1
09	BA09736A	Mecha Flexible P.C.B. Ass'y	1
10	0C10286A	Anti Rattle Spring SL	1
11	CA09392B	SUS Base ADT S Ass'y	1
12	0C10185B	Mechanism UD Sub Cam SL	1
13	0C10186A	UD S Cam Guide SL	2
14	CA09351A	Stocker Motor SL Ass'y	1
15	0J08004A	Dust Seal Emergency SL	1
16	0C10175A	Stocker Position Gear SL	1
17	0C10211B	Plate Spring SL	1
18	0C10184A	Disc Lock Spring SL	1
19	0C10183A	Disc Lock Arm SL	1
20	0C10187A	UD Link Arm SL	1
21	BA10175A	Photo P.C.B. Ass'y	1
22	0C10306C	EX Loading Chassis	1
23	0C10351A	EX Loading Return Spring	1
24	CA09407A	Mov G Plate Ass'y	1
25	CA09408A	EX Motor Ass'y	1
26	0C10250A	Shutter Spring SL	1
27	0C10305B	Sub Cam Extension	1
28	BA10168A	Mechanism P.C.B. Ass'y (M3C1) **(See Note.)**	1
29	0J08023A	Heat Sink Reg	1
30	HA07968B	F Panel EX Ass'y	1
31	CA09394A	Bottom Cover EX Ass'y	1
32	0B85435A	14P Flexible Wire	1
33	0B85438A	40P Flexible Wire	1
34	0B85434A	13P Flexible Wire	1
35	0B85437A	30P Flexible Wire	1
36	0B85493A	1P Wire GND D202	1
L01	0E00120A	M2.6x3 + Pan	
L02	0E03964A	ST2.6x3 + Pan (#0 Type 3)	
L03	0E03955A	Cut Washer 2.2x4.2x0.2	
L04	0E04036A	M2.6x8 + Pan	
L05	0C10287A	Damper Screw SL	
L06	0E03845A	M1.7x2.5 + Pan (#0 Type 3) (Black)	
L07	0E03945A	M2x2 + Pan (#0 Type 3) (Black)	
L08	0E03953A	M2x2 + Pan (#0 Type 1)	
L09	0E03971A	Pet Washer	
L10	0E03956A	Cut Washer 3.2x5.2x0.2	
L11	0E03947A	M2.6x3.5 + Pan (#0 Type 3)	
L12	0E04032A	M2.6x5 + Pan (#0 Type 3)	
L13	0E03954A	Cut Washer 1.6x3.2x0.2	

Schematic Ref. No.	Part No.	Description	Q'ty
B01	**HA08661A**	**Mechanism Ass'y (C3M1) [New]**	**1**
01	CG09478A	Mechanism Deck Ass'y	1
02	CA09393A	Top Cover EX Ass'y	1
03	CA09402A	Loading EX Ass'y	1
04	CA09479A	DVD Traverse Ass'y	1
05	0C10325B	SUS Collar T	4
06	0C10326A	SUS Collar B	4
07	0C10279A	Damper S SL	4
08	CA09415A	Motor Chassis EX Ass'y	1
09	BA09736A	Mecha Flexible P.C.B. Ass'y	1
10	0C10286A	Anti Rattle Spring SL	1
11	CA09392B	SUS Base ADT S Ass'y	1
12	0C10185B	Mechanism UD Sub Cam SL	1
13	0C10186A	UD S Cam Guide SL	2
14	CA09351A	Stocker Motor SL Ass'y	1
15	0J08004A	Dust Seal Emergency SL	1
16	0C10175A	Stocker Position Gear SL	1
17	0C10211B	Plate Spring SL	1
18	0C10184A	Disc Lock Spring SL	1
19	0C10183A	Disc Lock Arm SL	1
20	0C10187A	UD Link Arm SL	1
21	BA10175A	Photo P.C.B. Ass'y	1
22	0C10306C	EX Loading Chassis	1
23	0C10351A	EX Loading Return Spring	1
24	CA09407A	Mov G Plate Ass'y	1
25	CA09408A	EX Motor Ass'y	1
26	0C10250A	Shutter Spring SL	1
27	0C10305B	Sub Cam Extension	1
28	BA10323A	Mechanism P.C.B. Ass'y (C3M1) **(See Note.)**	1
29	0J08023A	Heat Sink Reg	1
30	HA07968B	F Panel EX Ass'y	1
31	CA09394A	Bottom Cover EX Ass'y	1
32	0B85435A	14P Flexible Wire	1
33	0B85438A	40P Flexible Wire	1
34	0B85434A	13P Flexible Wire	1
35	0B85437A	30P Flexible Wire	1
36	0B85493A	1P Wire GND D202	1
L01	0E00120A	M2.6x3 + Pan	
L02	0E03964A	ST2.6x3 + Pan (#0 Type 3)	
L03	0E03955A	Cut Washer 2.2x4.2x0.2	
L04	0E04036A	M2.6x8 + Pan	
L05	0C10287A	Damper Screw SL	
L06	0E03845A	M1.7x2.5 + Pan (#0 Type 3) (Black)	
L07	0E03945A	M2x2 + Pan (#0 Type 3) (Black)	
L08	0E03953A	M2x2 + Pan (#0 Type 1)	
L09	0E03971A	Pet Washer	
L10	0E03956A	Cut Washer 3.2x5.2x0.2	
L11	0E03947A	M2.6x3.5 + Pan (#0 Type 3)	
L12	0E04032A	M2.6x5 + Pan (#0 Type 3)	
L13	0E03954A	Cut Washer 1.6x3.2x0.2	

Note for Ref. No. 28:
When the Mechanism P.C.B. Ass'y is replaced with new one, pay attention to the compatibility with the DVD Main P.C.B. Ass'y.
- When the current DVD Main P.C.B. Ass'y (M3C1) is used, use the Mechanism P.C.B. Ass'y (M3C1).
- When the new DVD Main P.C.B. Ass'y (C3M1) is used, use the new Mechanism P.C.B. Ass'y (C3M1).

To identify the current and new DVD Main P.C.B. Ass'y, see "Note for Ref. No. 02" on page 1-22.

Lubricant:
NOTE: For places to be lubricant, see the next page.

We suggest that you use grease FL-955/G-4270 or equivalent type.
The company dealing FL-955/G-4270 is as follows:
- FL-955
  Kanto Chemicals Co. Ltd., 2-7 Kanda Sakuma-cho, Chiyoda-Ku, Tokyo, Japan

4.6. Loading EX Ass'y (C01)

Schematic Ref. No.	Part No.	Description	Q'ty
C01	**CA09402A**	**Loading EX Ass'y**	**1**
01	0C10201A	Loading Plate R SL	1
02	0C10215A	LP Slider SL	2
03	0C10295A	Loading Roller	4
04	0C10296A	Screw Collar	4
05	0C10294A	Loading Screw	4
06	CA09403A	Clamper ADT Ass'y	1
07	0C10203A	Disc Guide Upper SL	1
08	0C10252A	Loading Return Spring SL	1
09	CA09356A	Loading Link B SL S Ass'y	1
10	0C10248A	Loading Idler Gear L SL	1
11	0C10247A	Loading Gear Collar SL	1
12	CA09355A	Loading Link A SL S Ass'y	1
13	0C10213A	Timing Gear SL	1
14	0C10190A	Timing Belt SL	1
15	CA09335A	Disc Fin Arm LO SL S Ass'y	1
16	0C10199A	Disc Guide L SL	1
17	0C10214A	Catch Arm Spring SL	1
18	0C10193A	Pulley Spring SL	1
19	0C10192A	Pulley Fork SL	1
20	0C10191A	Idler Pulley SL	1
21	0C10195B	Lapping Arm SL	2
22	0C10194A	Disc Catch Gear SL	1
23	CA09336A	Disc Fin Arm SL S Ass'y	1
24	0C10196C	Lapping Arm Spring	1
25	CA09337A	Loading Plate L SL A Ass'y	1
26	0C10251A	Loading Center Gear SL	1
27	0C10250A	Shutter Spring SL	1
28	0C10204A	Shutter Lever SL	1
29	CA09361C	Loading Chassis SLS Ass'y	1
30	0C10255A	Shutter Arm Cushion SL	2
31	0C10249A	Shutter Arm SL	1
32	0C10254A	Shutter Arm Shaft SL	1
33	0C10206A	Clamp Holder R SL	1
34	0C10205A	Clamp Holder L SL	1
35	0C10253A	Clamper Return Spring SL	1
36	CA09395A	Disc G R EX S Ass'y	1
L01	0E03961A	BT2x4 + Pan (#0 Type 1) (Black)	
L02	0E03943A	BT1.7x5 + Pan (#0 Type 3) (Black)	
L03	0E03955A	Cut Washer 2.2x4.2x0.2	
L04	0E03969A	M1.4x3 + Pan (#0 Type 3)	
L05	0E03963A	BT1.7x3 + Pan (#0 Type 1) (Black)	

● **For Fig. 4.6**

Apply **FL-955** (grease) to the following places (marked with ★) when parts are replaced.

Ref. No.	Location	Remarks
01	Loading Plate R SL	Groove
02	LP Slider SL	Whole surface (2 places)
03	Loading Roller	Whole surface (4 places)
04	Screw Collar	Whole surface (4 places)
09	Loading Link B SL S Ass'y	Gear surface
10	Loading Idler Gear L SL	Gear surface
12	Loading Link A SL S Ass'y	Gear surface
13	Timing Gear SL	Gear surface
16	Disc Guide L SL	Stud
20	Idler Pulley SL	Whole surface
25	Loading Plate L SL A Ass'y	Grooves (2 places)
26	Loading Center Gear SL	Whole surface
29	Loading Chassis SL Ass'y	Holes (4 places)
33	Clamp Holder L SL	Whole surface
34	Clamp Holder R SL	Whole surface

● **For Fig. 4.5 on page 1-24**

Apply **FL-955** (grease) to the following places (marked with ★) when parts are replaced.

Ref. No.	Location	Remarks
03	Loading EX Ass'y Edges which are inserted into the chassis plate	
11	SUS Base ADT S Ass'y • Contact part with the Plate Spring SL (Ref. No. 17)	
12	Mecha UD Sub Cam SL	Whole surface
13	UD S Cam Guide SL (2 pcs.)	Whole surface
14	Stocker Motor SL Ass'y • Motor Shaft Worm Gear • Motor Shaft End	
17	Plate Spring SL Contact part (bottom end) with the SUS Base X Sub Ass'y (Ref. No. 11)	
19	Disc Lock Arm SL	Whole surface
20	UD Link Arm SL • Around the Top End	
—	Shaft for UD Link Arm SL (Ref. No. 20)	

4.6. Loading EX Ass'y (C01)

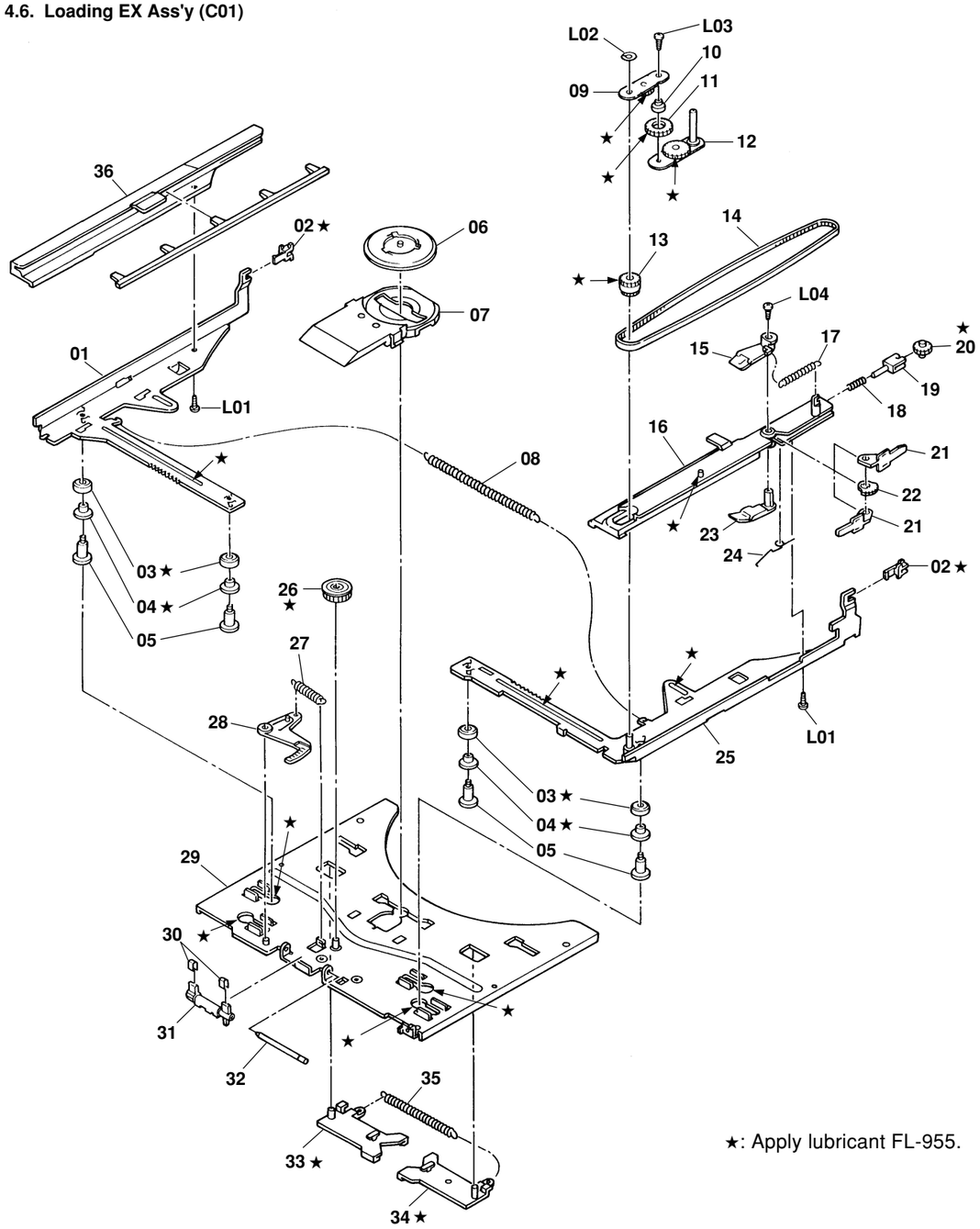

Fig. 4.6

4.7. Motor Chassis SL Ass'y (C02)

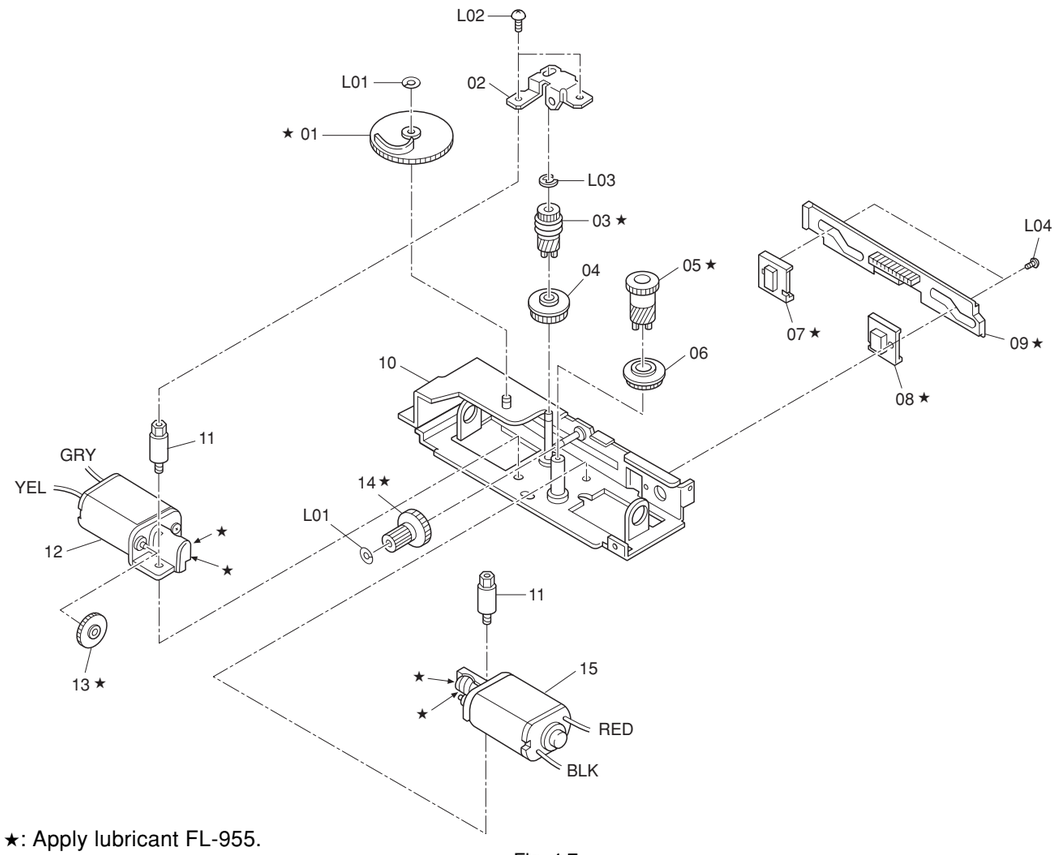

Fig. 4.7

4.7. Motor Chassis SL Ass'y (C02)

Schematic Ref. No.	Part No.	Description	Q'ty
C02	**CA09415A**	**Motor Chassis EX Ass'y**	**1**
01	0C10238A	Loading Plate Cam SL	1
02	0C10240A	UD Worm Plate SL	1
03	0C10233A	UD Worm Gear SL	1
04	0C10235A	Mecha Sensor Ring SL	1
05	0C10236A	Loading Worm Gear SL	1
06	0C10237A	Loading Sensor Ring SL	1
07	0C10208A	UD Cam Guide SL	1
08	0C10242A	UD Cam Guide W SL	1
09	0C10232A	UD Cam SL	1
10	CA09338A	Motor Chassis SL S Ass'y	1
11	0C10241A	Bracket Screw SL	2
12	CA09417A	UD Motor EX Ass'y	1
13	0C10239A	Emergency Gear SL	1
14	0C10234A	Mecha UD Gear SL	1
15	CA09416A	Loading Motor EX Ass'y	1
L01	0E03955A	Cut Washer 2.2x4.2x0.2	
L02	0E03947A	M2.6x3.5 + Pan (#0 Type 3)	
L03	0E00222A	E-Ring 2.0mm	
L04	0E03967A	M1.4x2 + Pan (#0 Type 1) (Black)	

Apply **FL-955** (grease) to the following places (marked with ★) when parts are replaced.

Ref. No.	Location	Remarks
01	Loading Plate Cam SL	Whole surface
03	UD Worm Gear SL	Whole surface
05	Loading Worm Gear SL	Whole surface
07	UD Cam Guide SL	Whole surface
08	UD Cam Guide W SL	Whole surface
09	UD Cam SL	Whole surface
12	UD Motor EX Ass'y • Motor Shaft Worm Gear • Motor Shaft End	
13	Emergency Gear SL	Whole surface
14	Mecha UD Gear SL	Whole surface
15	Loading Motor EX Ass'y • Motor Shaft Worm Gear • Motor Shaft End	

NOTES: 1. Abbreviations
TR – Transistor, SID – Silicon Diode, ZD – Zener Diode, Varicap – Variable Capacitance Diode
RK – Carbon Resistor, RM – Metal Film Resistor, RF – Fail Safe Type Resistor,
RC – Cement Resistor, CE – Electrolytic Capacitor, CML – Mylar Capacitor,
CC – Ceramic Capacitor, CPP – PP Capacitor, CMM – Metalized Mylar Capacitor,
CSP – Polystyrene Capacitor, C – Mica Capacitor, CT – Tantalum Capacitor
2. Description of capacitor: 10 16V = 10µ 16V
3. Parts marked with * show chip parts.

5.1. Main P.C.B. Ass'y

Schematic Ref. No.	Part No.	Description
	BA10163A	**Main P.C.B Ass'y (JPN)**
	BA10164A	**Main P.C.B Ass'y (USA, CAN, DA)**
	BA10165A	**Main P.C.B Ass'y (UK, AUS, EP)**
	BA10166A	**Main P.C.B Ass'y (OTR, CH, HK, ML)**
	BA10167A	**Main P.C.B Ass'y (KR, TW) [SS-10/11/21]**
U101	0B12863A	IC UPD78F4225GC-8*
U102	0B10554A	IC PQ05RF1
U103	0B10806A	IC TC4538BF*
U104	0B10805A	IC TC4001BF*
U105	0B10723A	IC SN74LV32NS*
U106	0B10719A	IC TA8409F*
U301	0B12864A	IC PQ30RV2
U302	0B10571A	IC PQ05RF2
U303	0B12864A	IC PQ30RV2
U304	0B10645A	IC NJM2100M*
U305	0B10832A	IC TC74HCU04AF*
U307,308	0B12862A	IC BA7660FS*
Q101,102	0B14167A	TR 2SC2412K*
Q103	0B14167A	TR 2SC2412K*
Q104	0B10930A	TR 2SD1758F*
Q105,106	0B14011A	TR DTC114EK*
Q107	0B14011A	TR DTC114EK*
Q108	0B14002A	TR DTA114EK*
Q109	0B14011A	TR DTC114EK*
Q301L,R	0B14193A	TR DTC323TK*
Q302	0B12901A	TR 2SB1132R*
Q303	0B14011A	TR DTC114EK*
ZD101,102	0B12150A	ZD RD5.6V JS B2
ZD103,104	0B12150A	ZD RD5.6V JS B2
ZD105,106	0B12150A	ZD RD5.6V JS B2
ZD107,108	0B12150A	ZD RD5.6V JS B2
ZD109,110	0B12150A	ZD RD5.6V JS B2
ZD111	0B12150A	ZD RD5.6V JS B2
ZD112	0B12154A	ZD RD6.2V JS B3
ZD113	0B12150A	ZD RD5.6V JS B2
D101,102	0B12249A	SID 1SS133
D103	0B12586A	SID 1N4002
D106,107	0B12249A	SID 1SS133
D108,109	0B12249A	SID 1SS133
D110,111	0B12249A	SID 1SS133
D112	0B12249A	SID 1SS133
D113	0B12745A	SID MA719
L101,102	0B51369A	Inductor 10mH
L316,317	0B50354A	Coil 750* (UK, OTR, AUS, EP, CH, HK, KR, ML, TW)
	0B25612A	RK 0 1/10W J* (USA, CAN, DA, JPN)
L323,324	0B50354A	Coil 750* (UK, OTR, AUS, EP, CH, HK, KR, ML, TW)
	0B25612A	RK 0 1/10W J* (USA, CAN, DA, JPN)
L325	0B50354A	Coil 750* (UK, OTR, AUS, EP, CH, HK, KR, ML, TW)
	0B25612A	RK 0 1/10W J* (USA, CAN, DA, JPN)
X101	0B90905A	X'tal 8.38MHz
T301	0B51351A	Pulse Transformer (TC-1027-04)
R000	0B25612A	RK 0 1/10W J*
R101,102	0B25539A	RK 1K 1/10W J*
R103,104	0B25539A	RK 1K 1/10W J*
R105,106	0B25539A	RK 1K 1/10W J*
R107,108	0B25539A	RK 1K 1/10W J*
R109	0B25539A	RK 1K 1/10W J*
R110,111	0B25555A	RK 4.7K 1/10W J*
R112,113	0B25539A	RK 1K 1/10W J*
R114,115	0B25539A	RK 1K 1/10W J*
R116,117	0B25539A	RK 1K 1/10W J*
R118,119	0B25539A	RK 1K 1/10W J*
R120,121	0B25539A	RK 1K 1/10W J*
R122	0B25539A	RK 1K 1/10W J*
R123	0B25563A	RK 10K 1/10W J*
R124,125	0B25547A	RK 2.2K 1/10W J*
R126,127	0B25563A	RK 10K 1/10W J*
R128	0B25563A	RK 10K 1/10W J*
R129	0B25612A	RK 0 1/10W J* (UK, OTR, AUS, EP, CH, HK, ML)
	0B29999A	Dummy R (JPN, USA, CAN, DA, KR, TW)
R130	0B25563A	RK 10K 1/10W J* (OTR, CH, HK, KR, ML, TW)
	0B25612A	RK 0 1/10W J* (USA, CAN, DA)
	0B29999A	Dummy R (UK, JPN, AUS, EP)
R131	0B25612A	RK 0 1/10W J* (JPN)
	0B29999A	Dummy R (Except JPN)
R132,133	0B25539A	RK 1K 1/10W J*
R134	0B25555A	RK 4.7K 1/10W J*
R135	0B25611A	RK 1M 1/10W J*
R136	0B25563A	RK 10K 1/10W J*
R137	0B25587A	RK 100K 1/10W J*
R138	0B25547A	RK 2.2K 1/10W J*
R139,140	0B25587A	RK 100K 1/10W J*
R141	0B25605A	RK 560K 1/10W J*
R142	0B25609A	RK 820K 1/10W J*
R143	0B25563A	RK 10K 1/10W J*
R144	0B25605A	RK 560K 1/10W J*
R145	0B25571A	RK 22K 1/10W J*
R146	0B25579A	RK 47K 1/10W J*
R147	0B25563A	RK 10K 1/10W J*
R148	0B25605A	RK 560K 1/10W J*
R149	0B25571A	RK 22K 1/10W J*
R150	0B25605A	RK 560K 1/10W J*
R151	0B25563A	RK 10K 1/10W J*
R152,153	0B25579A	RK 47K 1/10W J*
R154,155	0B25515A	RK 100 1/10W J*
R156	0B25539A	RK 1K 1/10W J*
R157	0B25515A	RK 100 1/10W J*
R158	0B25587A	RK 100K 1/10W J*
R159	0B25539A	RK 1K 1/10W J*
R160	0B25612A	RK 0 1/10W J*
R161	0B25563A	RK 10K 1/10W J*
R162,163	0B25507A	RK 47 1/10W J*
R164	0B25491A	RK 10 1/10W J*
R165	0B25499A	RK 22 1/10W J*
R166,167	0B25539A	RK 1K 1/10W J*
R168,169	0B25539A	RK 1K 1/10W J*
R170	0B25515A	RK 100 1/10W J*
R171	0B25587A	RK 100K 1/10W J*
R301	0B25553A	RK 3.9K 1/10W J*
R302	0B25539A	RK 1K 1/10W J*
R303	0B25543A	RK 1.5K 1/10W J*
R304	0B25538A	RK 910 1/10W J*
R307L,R	0B25579A	RK 47K 1/10W J*
R308L,R	0B25515A	RK 100 1/10W J*
R309	0B25523A	RK 220 1/10W J*
R310	0B25563A	RK 10K 1/10W J*
R311	0B25579A	RK 47K 1/10W J*
R313	0B25512A	RK 75 1/10W J*
R314,315	0B25579A	RK 47K 1/10W J*
R316,317	0B25514A	RK 91 1/10W J*
R318,319	0B25531A	RK 470 1/10W J*
R320,321	0B25579A	RK 47K 1/10W J*
R322	0B25579A	RK 47K 1/10W J*
R323,324	0B25514A	RK 91 1/10W J*
R325	0B25514A	RK 91 1/10W J*
R326,327	0B25531A	RK 470 1/10W J*
R328	0B25531A	RK 470 1/10W J*
R329,330	0B25587A	RK 100K 1/10W J*
R331	0B25587A	RK 100K 1/10W J*
R332L,R	0B25562A	RK 9.1K 1/10W J*
R333L,R	0B25547A	RK 2.2K 1/10W J*
R334L,R	0B25562A	RK 9.1K 1/10W J*
R335	0B25539A	RK 1K 1/10W J*
R336	0B25521A	RK 180 1/10W J*
R337	0B25543A	RK 1.5K 1/10W J*
R338	0B21642A	RF 3.6 5W
R340L,R	0B25563A	RK 10K 1/10W J*
R341L,R	0B25563A	RK 10K 1/10W J*
R342L,R	0B25538A	RK 910 1/10W J*
R343,344	0B25598A	RK 300K 1/10W J*
R345,346	0B25598A	RK 300K 1/10W J*
R347	0B25598A	RK 300K 1/10W J*
R501,502	0B25579A	RK 47K 1/10W J*
C101	0B40081A	CE 470 16V
C102,103	0B43092A	CC 0.1 25V Z*
C104	0B40074A	CE 10 16V
C105	0B43092A	CC 0.1 25V Z*
C106	0B40074A	CE 10 16V
C107	0B42342A	CE 0.1F 5.5V
C108,109	0B43092A	CC 0.1 25V Z*
C111,112	0B43200A	CC 220P 50V J*
C113	0B43092A	CC 0.1 25V Z*
C114	0B40113A	CE 2.2 50V
C115,116	0B41300A	CML 0.15 50V J
C117,118	0B41823A	CML 0.01 50V J
C119	0B42235A	CML 2200P 50V J
C120	0B43092A	CC 0.1 25V Z*
C121	0B43221A	CC 0.047 25V K*

Schematic Ref. No.	Part No.	Description
C122	0B40081A	CE 470 16V
C123	0B43092A	CC 0.1 25V Z*
C124	0B40888A	CE 100 25V
C125	0B40079A	CE 220 16V
C126,127	0B43092A	CC 0.1 25V Z*
C128,129	0B43092A	CC 0.1 25V Z*
C130,131	0B43210A	CC 1000P 50V J*
C132	0B40081A	CE 470 16V
C301,302	0B41298A	CML 0.1 50V J
C303	0B40880R	CE 2200 16V
C304	0B41298A	CML 0.1 50V J
C305	0B40078A	CE 100 16V
C306	0B41298A	CML 0.1 50V J
C307	0B40082A	CE 1000 16V
C308,309	0B41298A	CML 0.1 50V J
C310	0B40081A	CE 470 16V
C311L,R	0B40715A	CE 10 16V (LN)
C312L,R	0B42231A	CML 1000P 50V J
C313L,R	0B40715A	CE 10 16V (LN)
C314	0B40078A	CE 100 16V
C315	0B43092A	CC 0.1 25V Z*
C316	0B40658A	CE 33 16V (LN)
C317	0B41249A	CPP 0.01 100V J
C318,319	0B40074A	CE 10 16V
C320	0B40078A	CE 100 16V
C321	0B40854A	CE 1000 6.3V
C323,324	0B43062A	CC 100P 50V J*
C325	0B40077A	CE 47 16V
C326	0B43092A	CC 0.1 25V Z*
C327,328	0B40074A	CE 10 16V
C329	0B40074A	CE 10 16V
C330	0B40854A	CE 1000 6.3V
C332,333	0B40078A	CE 100 16V
C334,335	0B43062A	CC 100P 50V J*
C336	0B43062A	CC 100P 50V J*
C337	0B40077A	CE 47 16V
C338	0B43092A	CC 0.1 25V Z*
C339L,R	0B42672A	CML 220P 50V J
C341	0B43092A	CC 0.1 25V Z*
C342	0B40078A	CE 100 16V
C343	0B41298A	CML 0.1 50V J
C345,346	0B43092A	CC 0.1 25V Z*
C347,348	0B43092A	CC 0.1 25V Z*
C349L,R	0B40074A	CE 10 16V
CN101	0B85466A	13P DIN Socket
CN102	0B85452A	13P Mini Socket
CN107	0B85430A	3P Wire Ass'y OPT
CP101	0B85422A	14P F Connector*
CP102	0B81468A	4P S-Post
CP103	0B84607A	8P F Connector*
CP104	0B85423A	24P F Connector*
CP105	0B84473A	11P S-Post (WHT)
CP106	0B81464A	7P T-Post
CP108	0B81466A	2P S-Post
CP301	0B81638A	6P T-Post
JB100,101	0B85492A	1P Wire VGND
PJ301	0B85356A	1P Pin Jack Gold
PJ302	0B85358A	1P S Jack Gold
PJ303	0B85357A	3P Pin Jack Gold
	0B80673A	Earth Terminal (1)
	0E00766A	M3x8 + Binding (3)
	0E00896A	M3x6 + Binding (2)
	0J08415A	Heat Sink Center (1)
	0J08433C	DIN FIX Plate (1)

5.2. Mechanism P.C.B. Ass'y

5.2.1. Mechanism P.C.B. Ass'y (M3C1) [Current]

Schematic Ref. No.	Part No.	Description
	BA10168A	**Mechanism P.C.B. Ass'y (M3C1) [Current] [SS-10/11/21]**
ICP01	0B12918A	IC ICP 0.5A*
U001	0B12868A	IC BA6859AFP*
U002	0B12867A	IC BA5938FM*
U003	0B11001A	IC NJM4558M
U004	0B06404A	IC NJM2904M
U105,106	0B10719A	IC TA8409F*
U107,108	0B10719A	IC TA8409F*
U401	0B10566A	IC PQ09RF1
U501	0B12869A	IC HD6433396*
U502	0B11928A	IC TC4049BF
Q001	0B14013A	TR DTC144EK*
Q031,032	0B12901A	TR 2SB1132R*
Q033	0B14227A	TR 2SA1576 S*
Q034	0B14009A	TR DTA144TKA*
Q035	0B14013A	TR DTC144EK*
Q036	0B10882A	TR DTC114TKA*
Q037	0B14188A	TR 2SC4081 R*
Q038,039	0B14002A	TR DTA114EK*
Q040,041	0B14188A	TR 2SC4081 R*
Q401	0B10792A	TR 2SB1182QR*
Q402	0B14167A	TR 2SC2412K*
Q403	0B10901A	TR 2SD2153TL*
Q404	0B10930A	TR 2SD1758F*
Q411,412	0B14167A	TR 2SC2412K*
Q413	0B14167A	TR 2SC2412K*
Q501	0B14167A	TR 2SC2412K*
Q502	0B14013A	TR DTC144EK*
Q511,512	0B14018A	TR DTC143TK*
Q513,514	0B14018A	TR DTC143TK*
Q515	0B14018A	TR DTC143TK*
ZD033	0B12168A	ZD RD10V JS B2
ZD401	0B12150A	ZD RD5.6V JS B2
ZD402	0B12160A	ZD RD7.5V JS B3
ZD403	0B12153A	ZD RD6.2V JS B2
ZD404	0B12150A	ZD RD5.6V JS B2
ZD502,503	0B12154A	ZD RD6.2V JS B3
D011	0B12249A	SID 1SS133
D031,032	0B12249A	SID 1SS133
D404	0B10540A	SID MA152WA*
D406	0B10540A	SID MA152WA*
D516	0B10539A	SID MA152WK*
D518	0B12249A	SID 1SS133
L001,002	0B50346A	Coil 80*
L003	0B50346A	Coil 80*
L503	0B50287A	Coil 120uH*
X501	0B90740A	Resonator 6.00MHz
J404,405	0B25612A	RK 0 1/10W J*
R001,002	0B09605A	RK 1 1/6W J
R003	0B09605A	RK 1 1/6W J
R004	0B25563A	RK 10K 1/10W J*
R005	0B25612A	RK 0 1/10W J*
R006	0B25563A	RK 10K 1/10W J*
R007,008	0B25517A	RK 120 1/10W J*
R011	0B25612A	RK 0 1/10W J*
R012	0B25563A	RK 10K 1/10W J*
R013,014	0B25579A	RK 47K 1/10W J*
R015,016	0B25612A	RK 0 1/10W J*
R017,018	0B25579A	RK 47K 1/10W J*
R019,020	0B25565A	RK 12K 1/10W J*
R021	0B25612A	RK 0 1/10W J*
R023	0B25573A	RK 27K 1/10W J*
R024	0B25555A	RK 4.7K 1/10W J*
R025	0B25553A	RK 3.9K 1/10W J*
R031	0B25612A	RK 0 1/10W J*
R032,033	0B25603A	RK 470K 1/10W J*
R034	0B25612A	RK 0 1/10W J*
R035,036	0B21416A	RM 91K 1/10W F*
R037	0B21393A	RM 10K 1/10W F*

Schematic Ref. No.	Part No.	Description
R038	0B21381A	RM 3.3K 1/10W F*
R039	0B25563A	RK 10K 1/10W J*
R040	0B25501A	RK 27 1/10W J*
R042	0B20675A	RK 2.2 1/10W K*
R043	0B25535A	RK 680 1/10W J*
R044	0B09621A	RK 4.7 1/6W J
R046	0B25531A	RK 470 1/10W J*
R047	0B25551A	RK 3.3K 1/10W J*
R050,051	0B25575A	RK 33K 1/10W J*
R052	0B25563A	RK 10K 1/10W J*
R053	0B25551A	RK 3.3K 1/10W J*
R054	0B25571A	RK 22K 1/10W J*
R055,056	0B25563A	RK 10K 1/10W J*
R061,062	0B09605A	RK 1 1/6W J
R063	0B09605A	RK 1 1/6W J
R066	0B25612A	RK 0 1/10W J*
R071,072	0B25612A	RK 0 1/10W J*
R073,074	0B25612A	RK 0 1/10W J*
R075,076	0B25612A	RK 0 1/10W J*
R401	0B25527A	RK 330 1/10W J*
R404	0B25587A	RK 100K 1/10W J*
R405	0B25563A	RK 10K 1/10W J*
R406	0B25595A	RK 220K 1/10W J*
R407	0B25579A	RK 47K 1/10W J*
R408,409	0B25587A	RK 100K 1/10W J*
R411	0B20068A	RK 220 1/2W J
R412	0B25563A	RK 10K 1/10W J*
R413	0B25533A	RK 560 1/10W J*
R414,415	0B25587A	RK 100K 1/10W J*
R416	0B25587A	RK 100K 1/10W J*
R417	0B20068A	RK 220 1/2W J
R418	0B25539A	RK 1K 1/10W J*
R419	0B25595A	RK 220K 1/10W J*
R420	0B25611A	RK 1M 1/10W J*
R422	0B25567A	RK 15K 1/10W J*
R506,507	0B25563A	RK 10K 1/10W J*
R508,509	0B25563A	RK 10K 1/10W J*
R510,511	0B25563A	RK 10K 1/10W J*
R512,513	0B25563A	RK 10K 1/10W J*
R516	0B25565A	RK 12K 1/10W J*
R517	0B25547A	RK 2.2K 1/10W J*
R518	0B25587A	RK 100K 1/10W J*
R519	0B25563A	RK 10K 1/10W J*
R524	0B25508A	RK 51 1/10W J*
R527	0B25555A	RK 4.7K 1/10W J*
R528	0B25611A	RK 1M 1/10W J*
R529,530	0B25555A	RK 4.7K 1/10W J*
R531	0B25611A	RK 1M 1/10W J*
R532	0B25555A	RK 4.7K 1/10W J*
R536,537	0B25579A	RK 47K 1/10W J*
R538,539	0B25579A	RK 47K 1/10W J*
R540,541	0B25579A	RK 47K 1/10W J*
R542,543	0B25579A	RK 47K 1/10W J*
R548	0B25579A	RK 47K 1/10W J*
R549	0B25563A	RK 10K 1/10W J*
R564,565	0B25531A	RK 470 1/10W J*
R570	0B25524A	RK 240 1/10W J*
R571	0B25509A	RK 56 1/10W J*
R572	0B25517A	RK 120 1/10W J*
R573	0B25513A	RK 82 1/10W J*
C001,002	0B42570A	CC 0.47 16V Z*
C003	0B42570A	CC 0.47 16V Z*
C004	0B43092A	CC 0.1 25V Z*
C005	0B42318A	CE 47 16V
C006	0B43092A	CC 0.1 25V Z*
C007	0B42321A	CE 100 10V
C008	0B42307A	CE 22 16V
C009	0B43092A	CC 0.1 25V Z*
C011	0B42321A	CE 100 10V
C012	0B42570A	CC 0.47 16V Z*
C013	0B42318A	CE 47 16V
C014	0B42307A	CE 22 16V
C015	0B43092A	CC 0.1 25V Z*
C031,032	0B43092A	CC 0.1 25V Z*
C033	0B43210A	CC 1000P 50V J*

Schematic Ref. No.	Part No.	Description
C034	0B43092A	CC 0.1 25V Z*
C035	0B43210A	CC 1000P 50V J*
C036	0B43092A	CC 0.1 25V Z*
C037	0B42307A	CE 22 16V
C038	0B42313A	CE 33 16V
C039	0B43092A	CC 0.1 25V Z*
C040	0B42318A	CE 47 16V
C041,042	0B43092A	CC 0.1 25V Z*
C043	0B43092A	CC 0.1 25V Z*
C044	0B42318A	CE 47 16V
C050,051	0B43092A	CC 0.1 25V Z*
C052,053	0B43092A	CC 0.1 25V Z*
C054,055	0B43092A	CC 0.1 25V Z*
C056	0B43092A	CC 0.1 25V Z*
C058,059	0B43092A	CC 0.1 25V Z*
C060,061	0B43092A	CC 0.1 25V Z*
C062	0B43092A	CC 0.1 25V Z*
C140	0B43092A	CC 0.1 25V Z*
C141	0B42318A	CE 47 16V
C162	0B43092A	CC 0.1 25V Z*
C403	0B42321A	CE 100 10V
C404	0B43092A	CC 0.1 25V Z*
C405	0B42324A	CE 220 10V
C406	0B43221A	CC 0.047 25V K*
C407	0B42314A	CE 33 25V
C409	0B42860A	CE 100 25V
C411	0B42247A	CE 0.1F 5.5V
C413,414	0B43092A	CC 0.1 25V Z*
C417	0B42313A	CE 33 16V
C419	0B43221A	CC 0.047 25V K*
C422	0B43210A	CC 1000P 50V J*
C504	0B43092A	CC 0.1 25V Z*
C505,506	0B43206A	CC 560P 50V J*
C507	0B42500A	CC 2.2 16V*
C509	0B43090A	CC 47P 50V J*
C516	0B43092A	CC 0.1 25V Z*
C521	0B43092A	CC 0.1 25V Z*
CN100	0B85425A	40P F Connector*
CN200	0B85424A	30P F Connector*
CN300	0B85420A	11P F Connector*
CN500	0B81466A	2P S-Post
CN501	0B80941A	14P F Connector*
CN600	0B85426A	2P S Post
CP103	0B84785A	22P F Connector*
CP104	0B81466A	2P S-Post
CP502	0B85421A	13P F Connector*

5.2.2. Mechanism P.C.B. Ass'y (C3M1) [New]

Schematic Ref. No.	Part No.	Description
	BA10323A	**Mechanism P.C.B. Ass'y (C3M1) [New] [SS-10/11/21]**
ICP01	0B12918A	IC ICP 0.5A*
U001	0B12868A	IC BA6859AFP*
U002	0B12867A	IC BA5938FM*
U003	0B11001A	IC NJM4558M
U004	0B06404A	IC NJM2904M
U105,106	0B10719A	IC TA8409F*
U107,108	0B10719A	IC TA8409F*
U401	0B10566A	IC PQ09RF1
U501	0B12869A	IC HD6433396*
U502	0B11928A	IC TC4049BF
Q001	0B14013A	TR DTC144EK*
Q031,032	0B12901A	TR 2SB1132R*
Q033,034	0B14227A	TR 2SA1576 S*
Q035	0B14188A	TR 2SC4081 R*
Q036	0B10882A	TR DTC114TKA*
Q037	0B14188A	TR 2SC4081 R*
Q038	0B14002A	TR DTA114EK*
Q090	0B14167A	TR 2SC2412K*
Q401	0B10792A	TR 2SB1182QR*

Schematic Ref. No.	Part No.	Description
Q402	0B14167A	TR 2SC2412K*
Q403	0B10901A	TR 2SD2153TL*
Q404	0B10930A	TR 2SD1758F*
Q411,412	0B14167A	TR 2SC2412K*
Q413	0B14167A	TR 2SC2412K*
Q501	0B14167A	TR 2SC2412K*
Q502	0B14013A	TR DTC144EK*
Q511,512	0B14018A	TR DTC143TK*
Q513,514	0B14018A	TR DTC143TK*
Q515	0B14018A	TR DTC143TK*
ZD033	0B12168A	ZD RD10V JS B2
ZD401	0B12150A	ZD RD5.6V JS B2
ZD402	0B12160A	ZD RD7.5V JS B3
ZD403	0B12153A	ZD RD6.2V JS B2
ZD404	0B12150A	ZD RD5.6V JS B2
ZD502,503	0B12154A	ZD RD6.2V JS B3
D011	0B12249A	SID 1SS133
D031,032	0B12249A	SID 1SS133
D404	0B10540A	SID MA152WA*
D406	0B10540A	SID MA152WA*
D516	0B10539A	SID MA152WK*
D518	0B12249A	SID 1SS133
L001,002	0B50346A	Coil 80*
L003	0B50346A	Coil 80*
L503	0B50287A	Coil 120uH*
X501	0B90740A	Resonator 6.00MHz
R001,002	0B09605A	RK 1 1/6W J
R003	0B09605A	RK 1 1/6W J
R004	0B25563A	RK 10K 1/10W J*
R005	0B25612A	RK 0 1/10W J*
R006	0B25563A	RK 10K 1/10W J*
R007,008	0B25517A	RK 120 1/10W J*
R011	0B25612A	RK 0 1/10W J*
R012	0B25563A	RK 10K 1/10W J*
R013,014	0B25579A	RK 47K 1/10W J*
R015,016	0B25612A	RK 0 1/10W J*
R017,018	0B25579A	RK 47K 1/10W J*
R019,020	0B25565A	RK 12K 1/10W J*
R021	0B25612A	RK 0 1/10W J*
R031	0B25612A	RK 0 1/10W J*
R032,033	0B25603A	RK 470K 1/10W J*
R034	0B25612A	RK 0 1/10W J*
R035,036	0B21416A	RM 91K 1/10W F*
R037	0B21393A	RM 10K 1/10W F*
R038	0B21381A	RM 3.3K 1/10W F*
R039	0B25563A	RK 10K 1/10W J*
R040	0B25491A	RK 10 1/10W J*
R042	0B20675A	RK 2.2 1/10W K*
R043	0B25535A	RK 680 1/10W J*
R044	0B25491A	RK 10 1/10W J*
R046	0B25531A	RK 470 1/10W J*
R047	0B25551A	RK 3.3K 1/10W J*
R048,049	0B25575A	RK 33K 1/10W J*
R050,051	0B25575A	RK 33K 1/10W J*
R052	0B25563A	RK 10K 1/10W J*
R053	0B25551A	RK 3.3K 1/10W J*
R055,056	0B21650A	RK 1.8M 1/10W J*
R057,058	0B25539A	RK 1K 1/10W J*
R059	0B25491A	RK 10 1/10W J*
R060	0B25499A	RK 22 1/10W J*
R066	0B25612A	RK 0 1/10W J*
R067	0B25555A	RK 4.7K 1/10W J*
R071,072	0B25612A	RK 0 1/10W J*
R073,074	0B25612A	RK 0 1/10W J*
R075,076	0B25612A	RK 0 1/10W J*
R081	0B25612A	RK 0 1/10W J*
R090	0B21379A	RM 2.7K 1/10W D*
R091	0B21377A	RM 2.2K 1/10W D*
R092	0B25524A	RK 240 1/10W J*
R093	0B25539A	RK 1K 1/10W J*
R401	0B25527A	RK 330 1/10W J*
R404	0B25587A	RK 100K 1/10W J*
R405	0B25563A	RK 10K 1/10W J*
R406	0B25595A	RK 220K 1/10W J*
R407	0B25579A	RK 47K 1/10W J*

Schematic Ref. No.	Part No.	Description
R408,409	0B25587A	RK 100K 1/10W J*
R411	0B20068A	RK 220 1/2W J
R412	0B25563A	RK 10K 1/10W J*
R413	0B25533A	RK 560 1/10W J*
R414,415	0B25587A	RK 100K 1/10W J*
R416	0B25587A	RK 100K 1/10W J*
R417	0B20068A	RK 220 1/2W J
R418	0B25539A	RK 1K 1/10W J*
R419	0B25595A	RK 220K 1/10W J*
R420	0B25611A	RK 1M 1/10W J*
R422	0B25567A	RK 15K 1/10W J*
R506,507	0B25563A	RK 10K 1/10W J*
R508,509	0B25563A	RK 10K 1/10W J*
R510,511	0B25563A	RK 10K 1/10W J*
R512,513	0B25563A	RK 10K 1/10W J*
R516	0B25565A	RK 12K 1/10W J*
R517	0B25547A	RK 2.2K 1/10W J*
R518	0B25587A	RK 100K 1/10W J*
R519	0B25563A	RK 10K 1/10W J*
R524	0B25508A	RK 51 1/10W J*
R527	0B25555A	RK 4.7K 1/10W J*
R528	0B25611A	RK 1M 1/10W J*
R529,530	0B25555A	RK 4.7K 1/10W J*
R531	0B25611A	RK 1M 1/10W J*
R532	0B25555A	RK 4.7K 1/10W J*
R536,537	0B25579A	RK 47K 1/10W J*
R538,539	0B25579A	RK 47K 1/10W J*
R540,541	0B25579A	RK 47K 1/10W J*
R542,543	0B25579A	RK 47K 1/10W J*
R548	0B25579A	RK 47K 1/10W J*
R549	0B25563A	RK 10K 1/10W J*
R564,565	0B25531A	RK 470 1/10W J*
R570	0B25524A	RK 240 1/10W J*
R571	0B25509A	RK 56 1/10W J*
R572	0B25517A	RK 120 1/10W J*
R573	0B25513A	RK 82 1/10W J*
C001,002	0B42570A	CC 0.47 16V Z*
C003	0B42570A	CC 0.47 16V Z*
C004	0B43092A	CC 0.1 25V Z*
C005	0B42318A	CE 47 16V
C006	0B43092A	CC 0.1 25V Z*
C007	0B42321A	CE 100 10V
C008	0B42307A	CE 22 16V
C009	0B43092A	CC 0.1 25V Z*
C011	0B42321A	CE 100 10V
C012	0B42833A	CC 0.47 16V K*
C013	0B42318A	CE 47 16V
C014	0B42307A	CE 22 16V
C015	0B43092A	CC 0.1 25V Z*
C031,032	0B43092A	CC 0.1 25V Z*
C033	0B43210A	CC 1000P 50V J*
C034	0B43092A	CC 0.1 25V Z*
C035	0B43210A	CC 1000P 50V J*
C036	0B43092A	CC 0.1 25V Z*
C037,038	0B42318A	CE 47 16V
C039	0B43092A	CC 0.1 25V Z*
C040	0B42318A	CE 47 16V
C041,042	0B43092A	CC 0.1 25V Z*
C043	0B43092A	CC 0.1 25V Z*
C044	0B42318A	CE 47 16V
C050,051	0B43092A	CC 0.1 25V Z*
C052,053	0B43092A	CC 0.1 25V Z*
C054,055	0B43092A	CC 0.1 25V Z*
C056	0B43092A	CC 0.1 25V Z*
C058,059	0B43092A	CC 0.1 25V Z*
C060,061	0B43092A	CC 0.1 25V Z*
C062	0B43092A	CC 0.1 25V Z*
C081	0B42570A	CC 0.47 16V Z*
C091	0B43062A	CC 100P 50V J*
C092	0B42318A	CE 47 16V
C140	0B43092A	CC 0.1 25V Z*
C141	0B42318A	CE 47 16V
C162	0B43092A	CC 0.1 25V Z*
C403	0B42321A	CE 100 10V
C404	0B43092A	CC 0.1 25V Z*

Schematic Ref. No.	Part No.	Description
C405	0B42324A	CE 220 10V
C406	0B43221A	CC 0.047 25V K*
C407	0B42314A	CE 33 25V
C409	0B42860A	CE 100 25V
C411	0B42247A	CE 0.1F 5.5V
C413,414	0B43092A	CC 0.1 25V Z*
C417	0B42313A	CE 33 16V
C419	0B43221A	CC 0.047 25V K*
C422	0B43210A	CC 1000P 50V J*
C504	0B43092A	CC 0.1 25V Z*
C505,506	0B43206A	CC 560P 50V J*
C507	0B42500A	CC 2.2 16V*
C509	0B43090A	CC 47P 50V J*
C516	0B43092A	CC 0.1 25V Z*
C521	0B43092A	CC 0.1 25V Z*
CN100	0B85425A	40P F Connector*
CN200	0B85424A	30P F Connector*
CN300	0B85420A	11P F Connector*
CN500	0B81466A	2P S-Post
CN501	0B80941A	14P F Connector*
CN600	0B85426A	2P S Post
CP103	0B84785A	22P F Connector*
CP104	0B81466A	2P S-Post
CP502	0B85421A	13P F Connector*
J404,405	0B25612A	RK 0 1/10W J*

5.3. LCD P.C.B. Ass'y

Schematic Ref. No.	Part No.	Description
	BA10169A	**LCD P.C.B Ass'y [SS-10/11/21]**
U701	0B12866A	IC LC75874E*
D701,702	0B12865A	LED White
D703,704	0B12865A	LED White
D705,706	0B12865A	LED White
D707	0B10825A	LED Amber GL3HS43
LCD701	0B90906A	LCD 110x110
R701	0B25529A	RK 390 1/10W J*
R702	0B25531A	RK 470 1/10W J*
R703	0B25537A	RK 820 1/10W J*
R704	0B25541A	RK 1.2K 1/10W J*
R705	0B25549A	RK 2.7K 1/10W J*
R706	0B25561A	RK 8.2K 1/10W J*
R707	0B25529A	RK 390 1/10W J*
R708	0B25531A	RK 470 1/10W J*
R709	0B25537A	RK 820 1/10W J*
R710	0B25541A	RK 1.2K 1/10W J*
R711	0B25549A	RK 2.7K 1/10W J*
R712	0B25561A	RK 8.2K 1/10W J*
R713,714	0B09659A	RK 180 1/6W J
R715	0B09659A	RK 180 1/6W J
R719	0B25523A	RK 220 1/10W J*
R720	0B25578A	RK 43K 1/10W J*
R721,722	0B25555A	RK 4.7K 1/10W J*
R723	0B25555A	RK 4.7K 1/10W J*
R724,725	0B25579A	RK 47K 1/10W J*
R726,727	0B25579A	RK 47K 1/10W J*
C701	0B42318A	CE 47 16V 47 16V
C702	0B43092A	CC 0.1 25V Z*
C703	0B43207A	CC 680P 50V J*
C704,705	0B43092A	CC 0.1 25V Z*
CN701	0B85428A	11P Wire Ass'y LCD
SW701,702	0B70282A	Tact Switch
SW703,704	0B70282A	Tact Switch
SW705,706	0B70282A	Tact Switch
SW707,708	0B70282A	Tact Switch
SW709,710	0B70282A	Tact Switch
SW711,712	0B70282A	Tact Switch
	0H08381C	LCD Reflector (1)
	0H08382B	LCD Lens (1)
	0H08383B	LCD Holder (1)
	0J08439B	Reflector Label A (1)
	0J08440A	Reflector Label B (1)
	0J08453A	LED Reflector (1)

5.4. SW P.C.B. Ass'y

Schematic Ref. No.	Part No.	Description
	BA10170A	**SW P.C.B Ass'y [SS-10/11/21]**
D906	0B12900A	LED Blue
D911,912	0B10825A	LED Amber GL3HS43
D913,914	0B10825A	LED Amber GL3HS43
D915	0B10825A	LED Amber GL3HS43
R901,902	0B25525A	RK 270 1/10W J*
R903,904	0B25525A	RK 270 1/10W J*
R905	0B25525A	RK 270 1/10W J*
R906	0B25507A	RK 47 1/10W J*
R907,908	0B09666A	RK 360 1/6W J*
C901	0B42318A	CE 47 16V
CP901	0B85418A	8P F Connector
CP902	0B85419A	13P F Connector
CP904	0B81466A	2P S-Post
S901,902	0B70251A	Tact Switch
S903,904	0B70251A	Tact Switch
S905	0B70251A	Tact Switch
S906	0B70282A	Tact Switch
	0J07771C	LED Holder (5)
	0J08443A	LED Spacer (1)

5.5. LED P.C.B. Ass'y

Schematic Ref. No.	Part No.	Description
	BA10171A	**LED P.C.B Ass'y [SS-10/11/21]**
D907	0B12865A	LED White
CN904	0B85429A	2P Wire Ass'y LED

5.6. REM P.C.B. Ass'y

Schematic Ref. No.	Part No.	Description
	BA10172A	**REM P.C.B. Ass'y [SS-10/11/21]**
U903	0B12804A	IR Sensor
CN903	0B85439A	3P Wire REM

5.7. Photo P.C.B. Ass'y

Schematic Ref. No.	Part No.	Description
	BA10175A	**Photo P.C.B. Ass'y [SS-10/11/21]**
	0B10737A	IC Photointerrupter (1)
	0B85440B	Wire EX Photo1 B (1)
	0B85441B	Wire EX Photo2 B (1)
	0B85442B	Wire EX Photo3 B (1)

5.8. OPT P.C.B. Ass'y

Schematic Ref. No.	Part No.	Description
	BA10173A	**OPT P.C.B. Ass'y [SS-10/11/21]**
U306	0B12811A	Toslink TOTX178A
C340	0B43092A	CC 0.1 25V Z*
CP107	0B81467A	3P S-Post

5.9. Sen P.C.B. Ass'y

Schematic Ref. No.	Part No.	Description
	BA10174A	**Sen P.C.B. Ass'y [SS-10/11/21]**
PC501,502	0B10737A	IC Photointerrupter
R503,504	0B25523A	RK 220 1/10W J*
CN501	0B85431A	4P Wire Ass'y OP/CL
	0J08373A	Sensor Adaptor 4 (1)

5.10. Mecha Flexible P.C.B. Ass'y

Schematic Ref. No.	Part No.	Description
	BA09736A	**Mecha Flexible P.C.B. Ass'y [SS-10/11/21]**
R701,702	0B21219A	RK 220 1/10W J*
R703,704	0B21219A	RK 220 1/10W J*
R705,706	0B21219A	RK 220 1/10W J*
R707,708	0B21219A	RK 220 1/10W J*
R709	0B21219A	RK 220 1/10W J*
PC701,702	0B10737A	IC Photointerrupter
PC703,704	0B10737A	IC Photointerrupter
PC705,706	0B10737A	IC Photointerrupter
PC707,708	0B10737A	IC Photointerrupter
PC709	0B10737A	IC Photointerrupter

Note: Mounting diagram of the Mecha Flexible P.C.B. Ass'y is omitted.

6. IC BLOCK DIAGRAMS

U101 μPD78F4225GC-8 (System Controller)

Pin No.	Signal Name	I/O	Function	Active	Standby
1	INT/$\overline{\text{EXT}}$	I	Video signal presence/absence detect signal.	—	—
2	$\overline{\text{MASTER}}$	I	Remote controller's Main/Remote detect signal.	—	—
3	P17/AN17	—	Grounded.		
4	AVSS	—	GND		
5	$\overline{\text{INH}}$	O	LCD display OFF signal.	L	L
6	CE	O	LCD driver IC enable signal.	H	L
7	AVREF1	—	+5V		
8	DI	I	Serial data input.	—	—
9	DO	O	Serial data output.	L/H	L
10	CLK	O	Serial clock output.	L/H	L
11	DVDI	I	Serial data input for DVD.	—	—
12	DVDO	O	Serial data output for DVD.	L/H	L
13	DVCLK	O	Serial clock output for DVD.	L/H	L
14	READY/BSY	I	READY/BUSY input for DVD.	—	L
15	ACCCONT	O	MB mechanism operation/standby control output.	H	L
16	SI	I	Serial data input for MB mechanism. (Serial data input for flash ROM writing.)	—	—
17	SO	O	Serial data output for CD mechanism. (Serial data output for flash ROM writing.)	L/H	L
18	SCK	I	Serial clock input for MB mechanism. (Serial clock input for flash ROM writing.)	—	L
19	CLKOUT	O	Serial clock output for MB mechanism.	L/H	L
20	DATOUT	O	Serial data output for MB mechanism.	L/H	L
21	A	O	Strobe address A for A/V Tuner/Processor unit.	L/H	L
22	B	O	Strobe address B for A/V Tuner/Processor unit.	L/H	L
23	C	O	Strobe address C for A/V Tuner/Processor unit.	L/H	L
24	LT1	O	Strobe permit output 1 for A/V Tuner/Processor unit.	L	L
25	LT2	O	Strobe permit output 2 for A/V Tuner/Processor unit.	L	L
26	B.L-ON	—	Not used.		
27	DZFL	I	DVD audio zero signal.	—	—
28	DZFR	I	DVD audio zero signal.	—	—
29	P52/A10	—	Not used.		
30	P53/A11	—	Not used.		
31	P54/A12	—	Not used.		
32	K.OP/CL	I	Door Open/Close signal.	—	—
33	VSS1	—	GND		
34	OPEN	I	Door open sensor signal.	—	—
35	CLOSE	I	Door close sensor signal.	—	—
36	MOT1	—	Not used.		
37	MOT2	—	Not used.		
38	P62/A18	—	Not used.		
39	P63/A19	—	Not used.		
40	AL5V	I	A/V Tuner/Processor unit connection detect signal.	—	—
41	P65/$\overline{\text{WR}}$	O	DVD backlighting ON signal.	H	L
42	L.LIGHT	O	LCD backlighting ON signal.	H	L
43	L.STBY	O	Standby LED ON signal.	H	L

Pin No.	Signal Name	I/O	Function	Active	Standby
44	P30/TO0	O	Transmission data select signal.	L/H	L
45	DSPSEL	O	Motor quasi-control output for DVD MPU.	H	L
46	P32/TO2	O	Motor quasi-control output for DVD MPU.	H	L
47	P33/TI1	—	Not used.		
48	P34/TI2	—	Not used.	H	L
49	REM	I	Remote controller signal.	—	—
50	MUTE	O	DVD audio mute signal.	H	L
51	P.ON	O	Power ON signal.	—	—
52	OPEN	O	Open SW output to DVD.	L	L
53	CLOSE	O	Close SW output to DVD.	L	L
54	DVRST	O	DVD reset signal.	H	L
55	CTL5V	O	5V control output for DVD.	H	L
56	V.MUTE	O	DVD video mute signal.	H	L
57	LM1	I	DVD tray motor control terminal signal.	—	—
58	LM2	I	DVD tray motor control terminal signal.	—	—
59	L.BLUE	O	Blue LED ON signal.	H	L
60	$\overline{\text{RESET}}$	—	Reset signal.		
61	P00/INTP0	—	Not used.		
62	$\overline{\text{P-OFF}}$	I	Power OFF detect signal.	—	—
63	P02/INT2	—	Not used.		
64	P03/INT3	—	Not used.		
65	P04/INT4	—	Not used.		
66	P05/INT5	—	Not used.		
67	Vss0	—	GND		
68	Vdd1	—	+5V		
69	X2	—	Crystal connecting terminal.		
70	X1	—	Crystal connecting terminal.		
71	VPP	—	—		
72	XT2	—	—		
73	XT1	—	—		
74	VDD0	—	+5V		
75	AVDD	—	+5V		
76	KIN1	I	Key input 1 signal.	—	—
77	KIN2	I	Key input 2 signal.	—	—
78	NT/$\overline{\text{PAL}}$	I	NTSC/PAL detect signal.	—	—
79	AREA	I	Destination setting signal.	—	—
80	MODEL	I	Model setting signal.	—	—

U501 HD6433396F12 (Mechanism Controller)

Pin No.	Signal Name	I/O	Function	Active
1	$\overline{\text{RES}}$	I	Reset signal.	—
2	XTAL	—	CPU clock (6MHz).	—
3	EXTAL	—	CPU clock (6MHz).	—
4	MD1	I	CPU mode select input.	—
5	MD0	I	CPU mode select input.	—
6	NMI	I	Grounded.	—
7	$\overline{\text{STBY}}$	I	Grounded.	—
8	VCC	—	+5V	—
9	CLK-IN	I	S-BUS clock input (SCI).	—
10	DAT-IN	I	S-BUS data input (SCI).	—
11	SYS-ON	O	System on signal.	H
12	VSS	—	GND	—
13	NC	—	—	—
14	NC	—	—	—
15	NC	—	—	—
16	NC	—	—	—
17	NC	—	—	—
18	$\overline{\text{BSENS}}$	I	Battery voltage sensing input.	—
19	$\overline{\text{ACC-CNT}}$	I	ACC control signal.	—
20	SQCK	O	Not used.	—
21	KEY1	I	key 1 input signal.	—
22	KEY2	I	key 2 input signal.	—
23	$\overline{\text{SCOR}}$	I	Grounded.	—
24	LD-PLS	I	Loading pulse.	—
25	UD-PLS	I	Up/Down pulse.	—
26	KEY3	I	key 3 input signal.	—
27	KEY4	I	key 4 input signal.	—
28	KEY5	I	key 5 input signal.	—
29	AVCC	—	+5V	—
30	SENSE	I	Grounded.	—
31	SQSO	I	Grounded.	—
32	FOK	I	Grounded.	—
33	GFS	I	Grounded.	—
34	UD-HOME	I	Up/down reference position signal.	—
35	DOOR	I	Door open signal.	—
36	SHUTTER	I	Shutter signal.	—
37	LD-INOUT	I	Loading in signal.	—
38	AVSS	—	GND	—
39	DLOCK	I	Disc lock signal.	—
40	DCNT	I	Disc count signal.	—
41	DCNT-HOME	I	Disc count home position	—
42	UD-UP	O	Up/down-motor down drive output.	H
43	UD-DOWN	O	Up/down-motor up drive output.	H
44	DSPSEL	I	DSP select signal.	—
45	FRONT	O	Loading-motor rear drive output.	H
46	REAR	O	Loading-motor front drive output.	H

Pin No.	Signal Name	I/O	Function	Active
47	VCC	—	+5V	—
48	NC	—	—	—
49	NC	—	—	—
50	NC	—	—	—
51	NC	—	—	—
52	NC	—	—	—
53	NC	—	—	—
54	NC	—	—	—
55	NC	—	—	—
56	VSS	—	GND	—
57	NC	—	—	—
58	NC	—	—	—
59	NC	—	—	—
60	DATA	O	Not used.	—
61	$\overline{\text{TR-ON}}$	O	Not used.	—
62	$\overline{\text{LDON}}$	O	Not used.	—
63	CDRST	O	Not used.	—
64	ENCLK	O	Not used.	H
65	LED1	O	Disc 1 LED drive output.	H
66	LED2	O	Disc 2 LED drive output.	H
67	LED3	O	Disc 3 LED drive output.	H
68	LED4	O	Disc 4 LED drive output.	H
69	LED5	O	Disc 5 LED drive output.	H
70	NC	—	—	—
71	NC	—	—	—
72	NC	—	—	—
73	VSS	—	GND	—
74	ST-DOWN	O	Stocker-motor down drive output.	H
75	ST-UP	O	Stocker-motor up drive output.	H
76	CLK	O	Not used.	—
77	MUTE	O	Not used.	—
78	DAT-OUT	O	S-BUS data out signal.	—
79	XLAT	O	Not used.	—
80	CLK-OUT	O	S-BUS clock out signal.	—

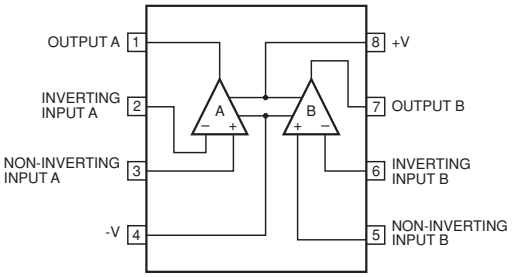

Fig. 6.1 Operational Amp. NJM2100M, 4558M, 2904M

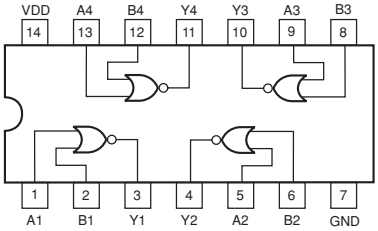

Fig. 6.2 NOR Gate TC4001BF (U104)

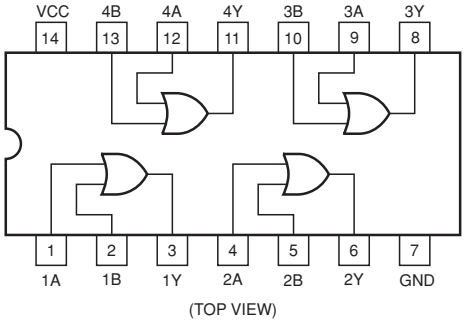

Fig. 6.3 OR Gate SN74LV32NS (U105)

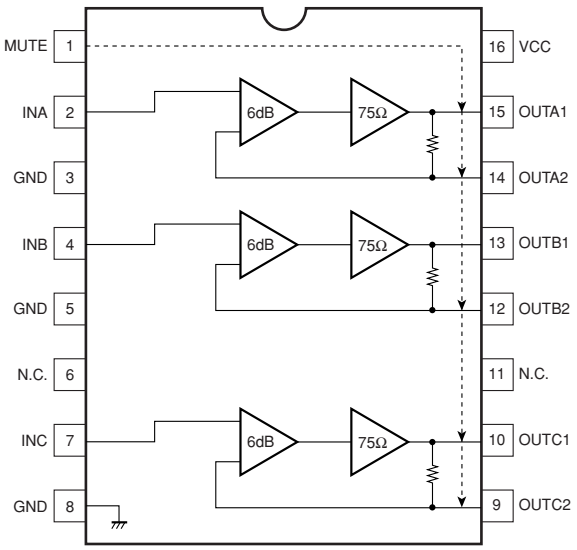

Fig. 6.4 75Ω Driver BA7660FS (U307, 308)

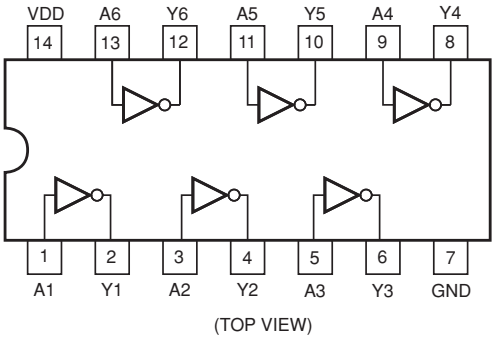

Fig. 6.5 Inverter TC74HCU04AF/TC4049BF (U305/U502)

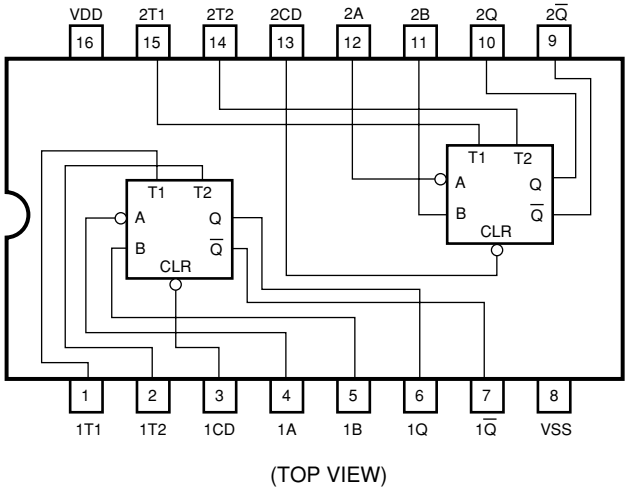

Fig. 6.6 One shot Multi-vibrator TC4538BF (U103)

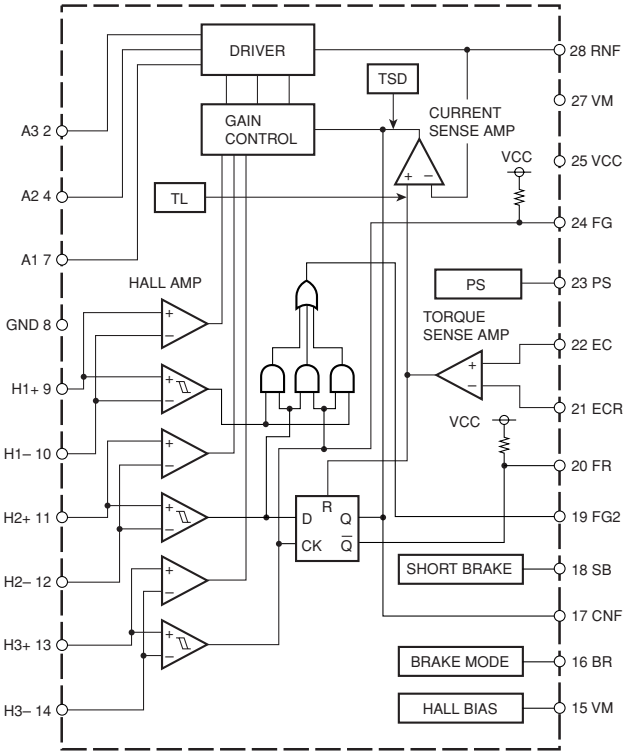

Fig. 6.7 3-Phase Motor Driver BA6859AFP (U001)

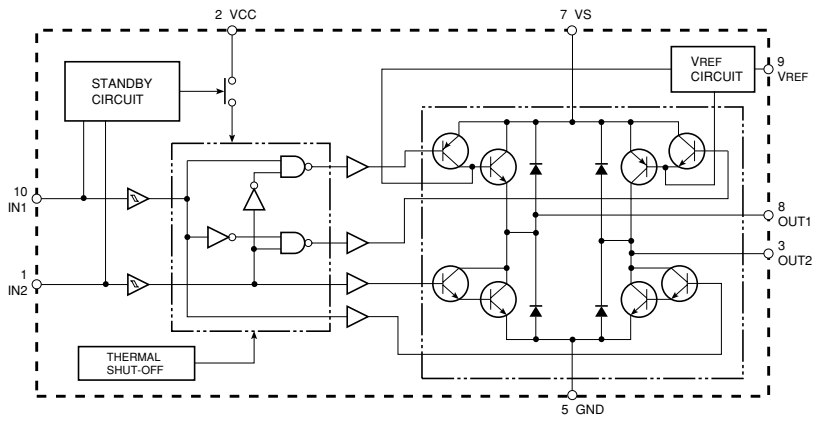

Fig. 6.8 Motor Driver TA8409F (U105-108)

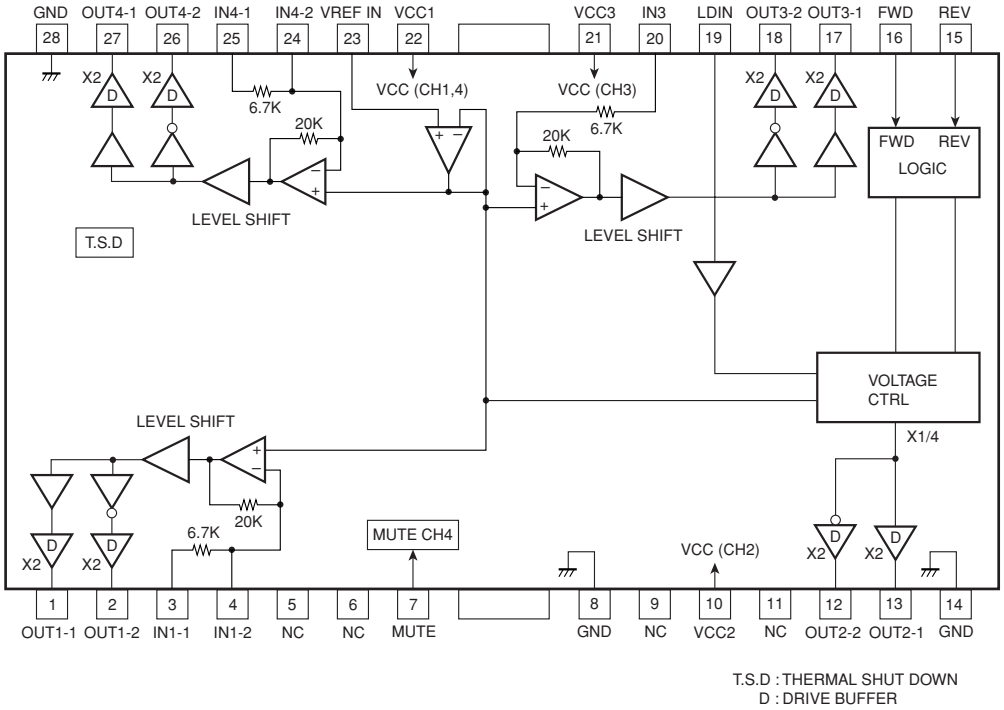

Fig. 6.9 Power Driver BA5938FM (U002)

7. BLOCK DIAGRAMS

7.1. Main P.C.B. Ass'y Section

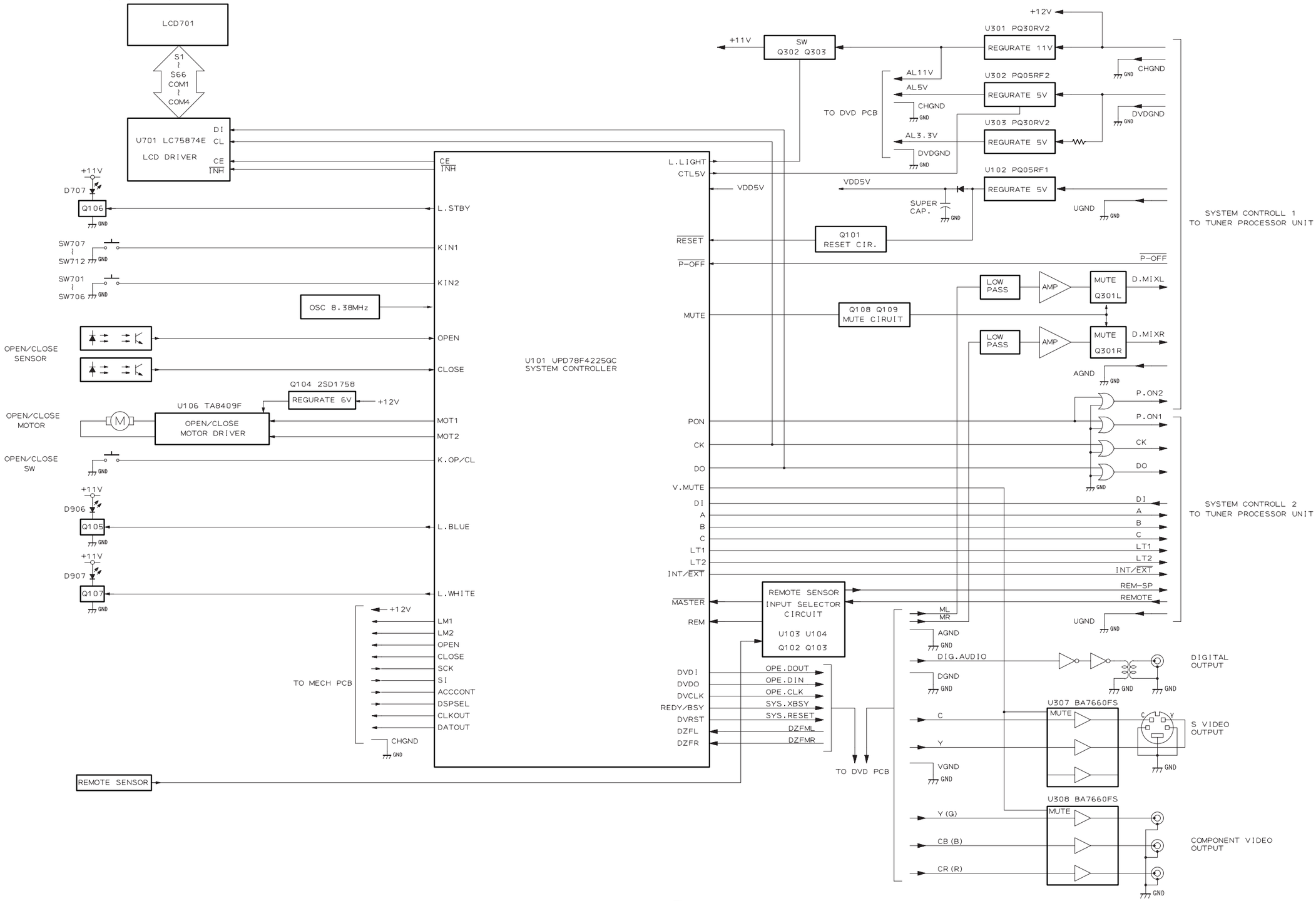

Fig. 7.1

7.2. Mechanism P.C.B. Ass'y Section

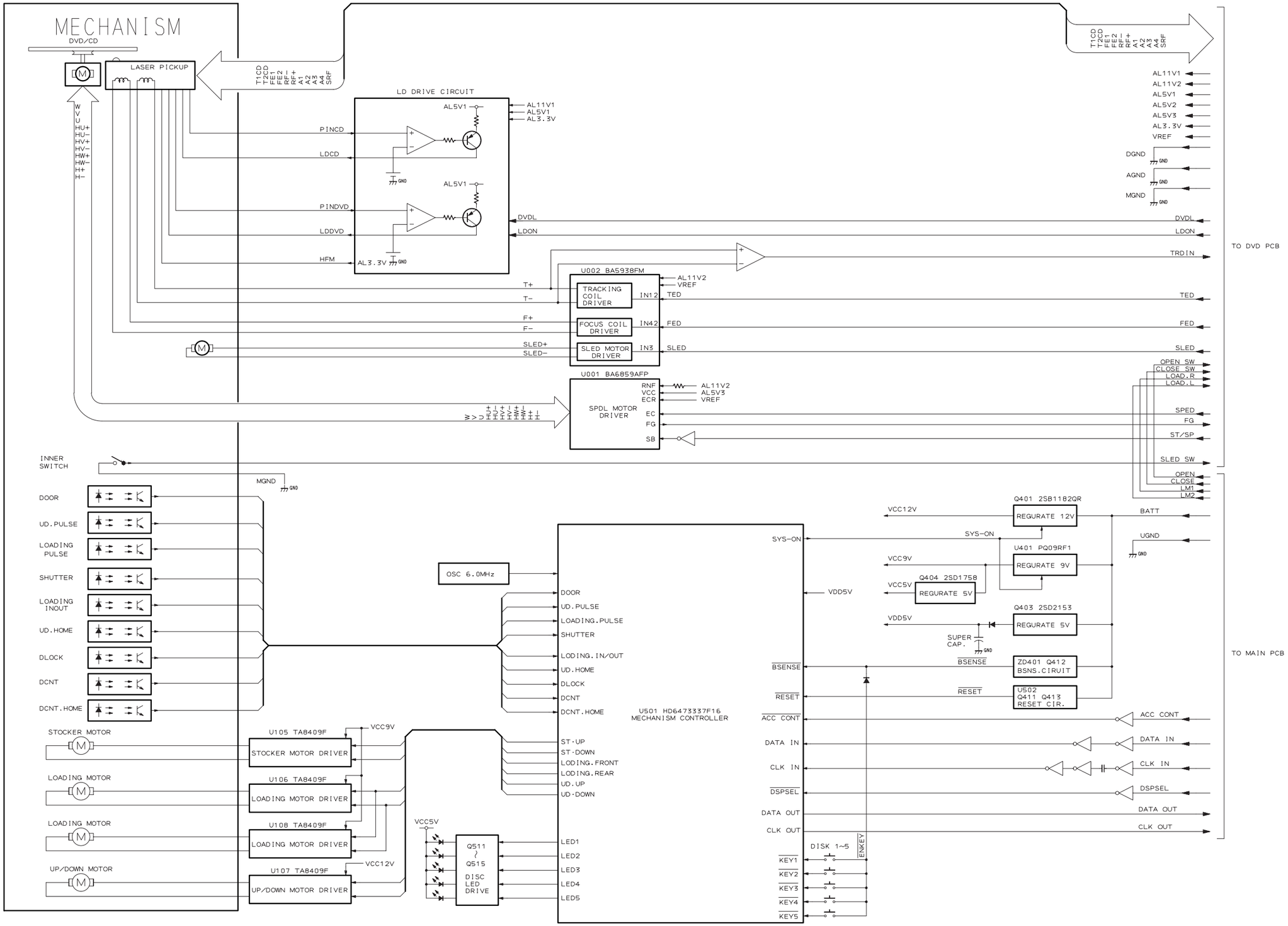

Fig. 7.2

A/V Tuner/Processor

A/V Tuner/Processor Unit Section

[SS-10/11/21]

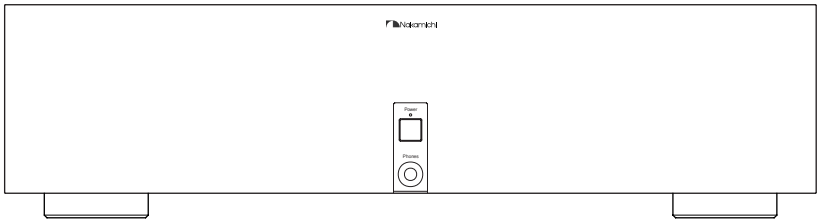

[SS-10/11]

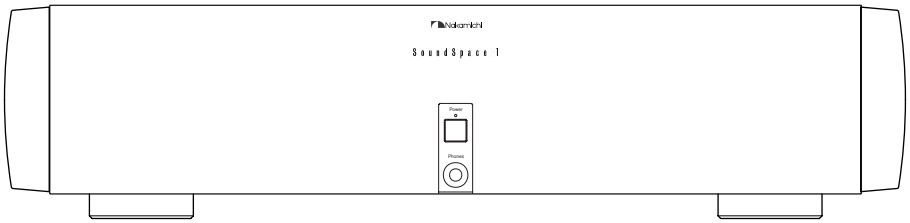

[SS-21]

CONTENTS

1. MECHANISM ASS'Y AND PARTS LIST

1.1. Synthesis (A/V Tuner/Processor Unit)

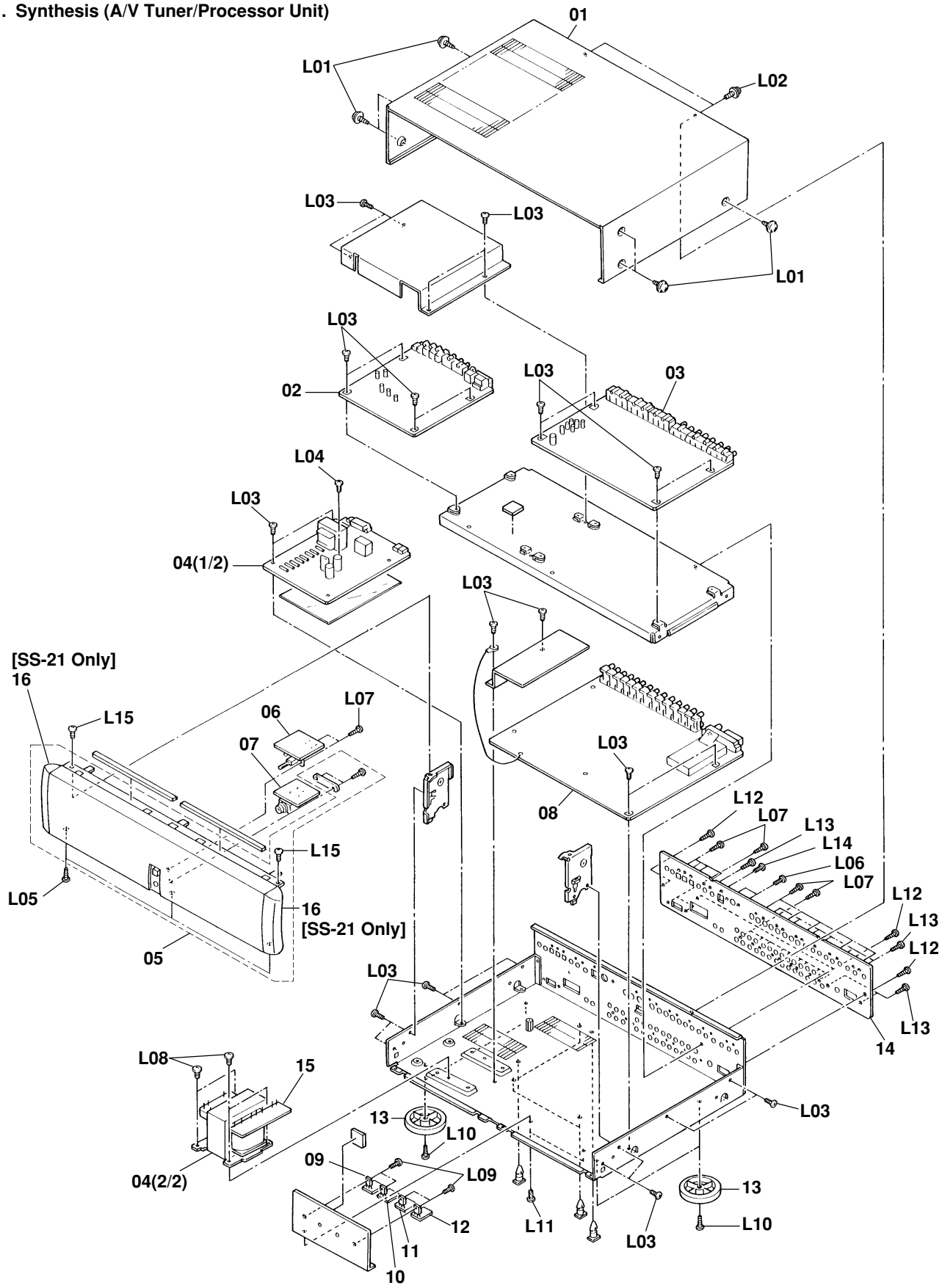

Fig. 1.1

(+) Polarity of Capacitor (–)

2. MOUNTING DIAGRAMS AND PARTS LIST

2.1. Digital P.C.B. Ass'y
Refer to the mounting diagram on pages 1-28 and 29.

2.2. P. Supply P.C.B. Ass'y
Refer to the mounting diagram on pages 1-34 and 35.

2.3. PSW-LED P.C.B. Ass'y
Refer to the mounting diagram on pages 1-34 and 35.

2.4. Headphone P.C.B. Ass'y
Refer to the mounting diagram on pages 1-34 and 35.

2.5. HS1 P.C.B. Ass'y
Refer to the mounting diagram on pages 1-34 and 35.

2.6. HS2 P.C.B. Ass'y
Refer to the mounting diagram on pages 1-34 and 35.

2.7. HS3 P.C.B. Ass'y
Refer to the mounting diagram on pages 1-34 and 35.

2.8. HS4 P.C.B. Ass'y
Refer to the mounting diagram on pages 1-34 and 35.

2.9. Trans-S P.C.B. Ass'y
Refer to the mounting diagram on pages 1-34 and 35.

2.10. AC LF P.C.B. Ass'y
Refer to the mounting diagram on pages 1-34 and 35.

1.1. Synthesis (A/V Tuner/Processor Unit)
1.1.1. Synthesis (A/V Tuner/Processor Unit) [SS-10/11]

Schematic Ref. No.	Part No.	Description	Q'ty
		Synthesis (A/V Tuner/Processor Unit) [SS-10/11]	
01	0H08392A	Top Cover HB	1
02	BA10135A	Digital P.C.B. Ass'y	1
03	BA10137A	Video P.C.B. Ass'y NTSC (JPN, TW, USA, CAN, KR)	1
	BA10147A	Video P.C.B. Ass'y PAL (OTR, DA, UK, CH, HK, EP, AUS, ML)	1
04	BA10136A	P. Supply P.C.B. Ass'y (USA, CAN)	1
	BA10144A	P. Supply P.C.B. Ass'y (JPN)	1
	BA10145A	P. Supply P.C.B. Ass'y (UK, CH, HK, KR, EP, AUS, ML)	1
	BA10146A	P. Supply P.C.B. Ass'y (OTR, DA, TW)	1
05	HA08120A	F Panel Ass'y HB **[SS-10]**	1
	HA08288A	F Panel Ass'y HB **[SS-10]**	1
06	BA10138A	PSW-LED P.C.B. Ass'y (Except JPN)	1
	BA10220A	PSW-LED P.C.B. Ass'y (JPN)	1
07	BA10139A	Headphone P.C.B Ass'y	1
08	BA10134A	Analog P.C.B. Ass'y (OTR, DA, TW, USA, CAN, CH, HK, KR, ML)	1
	BA10142A	Analog P.C.B. Ass'y (JPN)	1
	BA10143A	Analog P.C.B. Ass'y (UK, EP, AUS)	1
09	BA10229A	HS4 P.C.B. Ass'y	1
10	BA10228A	HS3 P.C.B. Ass'y	1
11	BA10194A	HS1 P.C.B. Ass'y	1
12	BA10195A	HS2 P.C.B. Ass'y	1
13	0H08470A	55 Foot A	4
14	0H08391E	Rear Sheet HB (USA, CAN) **[SS-10]**	1
	0H08393F	Rear Sheet HB (UK, CH, HK, KR, EP, AUS, ML) **[SS-10]**	1
	0H08414E	Rear Sheet HB (OTR, DA, TW) **[SS-10]**	1
	0H08501B	Rear Sheet HB (JPN) **[SS-10]**	1
	0H08562A	Rear Sheet HB (USA, CAN) **[SS-10]**	1
	0H08559A	Rear Sheet HB (UK, CH, HK, KR, EP, AUS, ML) **[SS-10]**	1
	0H08561A	Rear Sheet HB (OTR, DA, TW) **[SS-10]**	1
	0H08560A	Rear Sheet HB (JPN) **[SS-10]**	1
15	BA10177A	Trans-S P.C.B. Ass'y	1
—	BA10271A	AC LF P.C.B. Ass'y (UK, AUS, EP, CH, HK, KR, ML)	1
L01	0E04146A	BT4x8 + Pan	
L02	0E04147A	BT3x8 + Binding	
L03	0E00877A	ST3x5 + Binding	
L04	0E00992A	M3x4 + Binding	
L05	0E03028A	BT3x8 + Binding (Nickel)	
L06	0E04187B	M3x6 + Flat (Black)	
L07	0E03749A	PT3x8 + Binding (Black)	
L08	0E03438A	ST4x6 + Binding	
L09	0E00766A	M3x8 + Binding	
L10	0E00857A	BT3x6 + Binding	
L11	0E00896A	M3x6 + Binding	
L12	0E03283A	ST3x6 + Binding (Black)	
L13	0E00921A	BT3x8 + Binding (Black)	
L14	0E04188B	M2.6x6 + Flat (Black)	
L15	0E00868A	BT3x8 + Binding	
—	0E03656A	PT2.6x8 + Binding (Black) (for Voltage Selector) (OTR, DA)	

1.1.2. Synthesis (A/V Tuner/Processor Unit) [SS-21]

Schematic Ref. No.	Part No.	Description	Q'ty
		Synthesis (A/V Tuner/Processor Unit) [SS-21]	
01	0H08392A	Top Cover HB	1
02	BA10135A	Digital P.C.B Ass'y	1
03	BA10137A	Video P.C.B Ass'y NTSC (USA, CAN, JPN, KR, TW)	1
	BA10147A	Video P.C.B. Ass'y PAL (UK, OTR, AUS, EP, CH, DA, HK, ML)	1
04	BA10136A	P. Supply P.C.B Ass'y (USA, CAN)	1
	BA10144A	P. Supply P.C.B Ass'y (JPN)	1
	BA10145A	P. Supply P.C.B Ass'y (UK, AUS, EP, CH, HK, KR, ML)	1
	BA10146A	P. Supply P.C.B Ass'y (OTR, DA, TW)	1
05	HA08244A	F Panel Ass'y HB	1
06	BA10138A	PSW-LED P.C.B. Ass'y (Except JPN)	1
	BA10220A	PSW-LED P.C.B. Ass'y (JPN)	1
07	BA10139A	Headphone P.C.B Ass'y (JPN, OTR, USA, CAN, ,DA, TW)	1
	BA10270A	Headphone P.C.B. Ass'y (UK, AUS, EP, CH, HK, KR, ML)	1
08	BA10134A	Analog P.C.B Ass'y (USA, CAN, OTR, CH, DA, HK KR, ML, TW)	1
	BA10142A	Analog P.C.B Ass'y (JPN)	1
	BA10143A	Analog P.C.B Ass'y (UK, SA, EP)	1
09	BA10229A	HS4 P.C.B. Ass'y	1
10	BA10228A	HS3 P.C.B. Ass'y	1
11	BA10194A	HS1 P.C.B. Ass'y	1
12	BA10195A	HS2 P.C.B. Ass'y	1
13	0H08470A	55 Foot A	4
14	0H08530A	Rear Sheet HB (USA, CAN)	1
	0H08531A	Rear Sheet HB (JPN)	1
	0H08532A	Rear Sheet HB (OTR, DA, TW)	1
	0H08533A	Rear Sheet HB (UK, SA, EP, CH, HK, ML)	1
	0H08815A	Rear Sheet HB (KR)	1
15	BA10177A	Trans-S P.C.B. Ass'y	1
16	0H08539B	Dress Wood HB (Included in 05)	2
—	BA10271A	AC LF P.C.B. Ass'y (UK, AUS, EP, CH, HK, KR, ML)	1
—	0J08449A	W.F.20x80	4
—	0J08492A	Wood Spacer HB	2
L01	0E04146A	BT4x8 + Pan	
L02	0E04147A	BT3x8 + Binding	
L03	0E00877A	ST3x5 + Binding	
L04	0E00992A	M3x4 + Binding	
L05	0E03028A	BT3x8 + Binding (Nickel)	
L06	0E04187B	M3x6 + Flat (Black)	
L07	0E03749A	PT3x8 + Binding (Black)	
L08	0E03438A	ST4x6 + Binding	
L09	0E00766A	M3x8 + Binding	
L10	0E00857A	BT3x6 + Binding	
L11	0E00896A	M3x6 + Binding	
L12	0E03283A	ST3x6 + Binding (Black)	
L13	0E00921A	BT3x8 + Binding (Black)	
L14	0E04188B	M2.6x6 + Flat (Black)	
L15	0E00868A	BT3x8 + Binding	
—	0E03656A	PT2.6x8 + Binding (Black) (OTR, DA) (for Voltage Selector) (OTR, DA)	

NOTES: 1. Abbreviations
TR – Transistor, SID – Silicon Diode, ZD – Zener Diode, Varicap – Variable Capacitance Diode
RK – Carbon Resistor, RM – Metal Film Resistor, RF – Fail Safe Type Resistor,
RC – Cement Resistor, CE – Electrolytic Capacitor, CML – Mylar Capacitor,
CC – Ceramic Capacitor, CPP – PP Capacitor, CMM – Metalized Mylar Capacitor,
CSP – Polystyrene Capacitor, C – Mica Capacitor, CT – Tantalum Capacitor
2. Description of capacitor: 10 16V = 10µ 16V
3. Parts marked with * show chip parts.

2.1. Digital P.C.B. Ass'y

Schematic Ref. No.	Part No.	Description		
	BA10135A	**Digital P.C.B Ass'y [SS-10/11/21]**		
U801	0B11603A	IC	TC74HCU04AF	
U802	0B12881A	IC	TC74HC151AF*	
U803	0B12883A	IC	LC89055W*	
U804	0B12786A	IC	CS5360-KS*	
U805	0B12885A	IC	YSS912*	
U806	0B12884A	IC	TC55812BJ-15*	
U807,808	0B12783A	IC	AD1855*	
U809	0B12783A	IC	AD1855*	
U810	0B13396A	IC	TC74VHC153AF*	
U811,812	0B10809A	IC	NJU3712M*	
U813	0B10809A	IC	NJU3712M*	
U814,815	0B12880A	IC	HD74HC137FP*	
U816,817	0B10877A	IC	TC74HC165AF*	
U818	0B10877A	IC	TC74HC165AF*	
U819	0B12791A	IC	PQ20VZ1U*	
U820,821	0B10765A	IC	NJM2114M*	
U822	0B10765A	IC	NJM2114M*	
U823,824	0B11603A	IC	TC74HCU04AF	
U825,826	0B10645A	IC	NJM2100M*	
U827,828	0B11615A	TR	TC74HC08AF*	
U829	0B11615A	TR	TC74HC08AF*	
U830	0B11603A	IC	TC74HCU04AF	
Q801,802	0B14205A	TR	DTC314TK*	
Q803	0B14002A	TR	DTA114EK*	
Q804,805	0B14011A	TR	DTC114EK*	
ZD801,802	0B10485A	ZD	RD5.6UJN2*	
ZD803,804	0B10485A	ZD	RD5.6UJN2*	
ZD805,806	0B10485A	ZD	RD5.6UJN2*	
ZD807,808	0B10485A	ZD	RD5.6UJN2*	
ZD809,810	0B10485A	ZD	RD5.6UJN2*	
ZD811,812	0B10485A	ZD	RD5.6UJN2*	
D801,802	0B12249A	SID	1SS133	
L801,802	0B51392A	Inductor 47uH		
L803,804	0B51369A	Inductor 10mH		
L805	0B51392A	Inductor 47uH		
X801	0B90902A	X'tal 12.288MHz		
R801	0B25512A	RK	75	1/10W J*
R802	0B25579A	RK	47K	1/10W J*
R803	0B25537A	RK	820	1/10W J*
R804	0B25512A	RK	75	1/10W J*
R805	0B25579A	RK	47K	1/10W J*
R806	0B25537A	RK	820	1/10W J*
R807	0B25512A	RK	75	1/10W J*
R808	0B25579A	RK	47K	1/10W J*
R809	0B25537A	RK	820	1/10W J*
R810,811	0B25515A	RK	100	1/10W J*
R812,813	0B25515A	RK	100	1/10W J*
R814,815	0B25515A	RK	100	1/10W J*
R816	0B25563A	RK	10K	1/10W J*
R817,818	0B25515A	RK	100	1/10W J*
R819	0B25515A	RK	100	1/10W J*
R821	0B25512A	RK	75	1/10W J*
R822,823	0B25556A	RK	5.1K	1/10W J*
R824	0B25556A	RK	5.1K	1/10W J*
R825	0B25563A	RK	10K	1/10W J*
R826,827	0B25555A	RK	4.7K	1/10W J*
R828,829	0B25563A	RK	10K	1/10W J*
R830,831	0B25519A	RK	150	1/10W J*
R832	0B09925A	RK	2.2	1/4W J
R833	0B25563A	RK	10K	1/10W J*
R834,835	0B25555A	RK	4.7K	1/10W J*
R836,837	0B25563A	RK	10K	1/10W J*
R838,839	0B25519A	RK	150	1/10W J*
R840,841	0B25587A	RK	100K	1/10W J*
R842	0B25609A	RK	820K	1/10W J*
R844,845	0B25563A	RK	10K	1/10W J*
R846,847	0B25515A	RK	100	1/10W J*
R848	0B25563A	RK	10K	1/10W J*
R849	0B25611A	RK	1M	1/10W J*
R850,851	0B25515A	RK	100	1/10W J*
R852,853	0B25515A	RK	100	1/10W J*
R854,855	0B25515A	RK	100	1/10W J*
R856,857	0B25515A	RK	100	1/10W J*
R858,859	0B25563A	RK	10K	1/10W J*
R860,861	0B25563A	RK	10K	1/10W J*
R862	0B25563A	RK	10K	1/10W J*
R863	0B25515A	RK	100	1/10W J*
R864,865	0B25563A	RK	10K	1/10W J*
R866	0B25563A	RK	10K	1/10W J*
R867	0B25562A	RK	9.1K	1/10W J*
R868	0B25547A	RK	2.2K	1/10W J*
R869,870	0B25562A	RK	9.1K	1/10W J*
R871	0B25547A	RK	2.2K	1/10W J*
R872,873	0B25562A	RK	9.1K	1/10W J*
R874	0B25562A	RK	9.1K	1/10W J*
R875	0B25547A	RK	2.2K	1/10W J*
R876	0B25562A	RK	9.1K	1/10W J*
R877	0B25547A	RK	2.2K	1/10W J*
R878	0B25562A	RK	9.1K	1/10W J*
R879,880	0B25563A	RK	10K	1/10W J*
R881,882	0B25563A	RK	10K	1/10W J*
R883	0B25563A	RK	10K	1/10W J*
R884	0B25515A	RK	100	1/10W J*
R885,886	0B25563A	RK	10K	1/10W J*
R887	0B25563A	RK	10K	1/10W J*
R888,889	0B25562A	RK	9.1K	1/10W J*
R890	0B25547A	RK	2.2K	1/10W J*
R891	0B25562A	RK	9.1K	1/10W J*
R892	0B25547A	RK	2.2K	1/10W J*
R893,894	0B25562A	RK	9.1K	1/10W J*
R895	0B25562A	RK	9.1K	1/10W J*
R896	0B25547A	RK	2.2K	1/10W J*
R897	0B25562A	RK	9.1K	1/10W J*
R898	0B25547A	RK	2.2K	1/10W J*
R899	0B25562A	RK	9.1K	1/10W J*
R900,901	0B25563A	RK	10K	1/10W J*
R902,903	0B25563A	RK	10K	1/10W J*
R904	0B25563A	RK	10K	1/10W J*
R905	0B25515A	RK	100	1/10W J*
R906,907	0B25563A	RK	10K	1/10W J*
R908	0B25563A	RK	10K	1/10W J*
R909,910	0B25562A	RK	9.1K	1/10W J*
R911	0B25547A	RK	2.2K	1/10W J*
R912	0B25562A	RK	9.1K	1/10W J*
R913	0B25547A	RK	2.2K	1/10W J*
R914,915	0B25562A	RK	9.1K	1/10W J*
R916	0B25562A	RK	9.1K	1/10W J*
R917	0B25547A	RK	2.2K	1/10W J*
R918	0B25562A	RK	9.1K	1/10W J*
R919	0B25547A	RK	2.2K	1/10W J*
R920	0B25562A	RK	9.1K	1/10W J*
R921	0B25531A	RK	470	1/10W J*
R922,923	0B25491A	RK	10	1/10W J*
R924	0B25563A	RK	10K	1/10W J*
R925	0B25539A	RK	1K	1/10W J*
R926	0B25544A	RK	1.6K	1/10W J*
R927,928	0B25603A	RK	470K	1/10W J*
R929,930	0B25603A	RK	470K	1/10W J*
R931,932	0B25603A	RK	470K	1/10W J*
R933	0B25603A	RK	470K	1/10W J*
R934,935	0B25539A	RK	1K	1/10W J*
R936,937	0B25515A	RK	100	1/10W J*
R938	0B25515A	RK	100	1/10W J*
R939,940	0B25539A	RK	1K	1/10W J*
R941,942	0B25539A	RK	1K	1/10W J*
R943	0B25539A	RK	1K	1/10W J*
R944	0B20675A	RK	2.2	1/10W K*
R945	0B25612A	RK	0	1/10W J*
R946	0B25515A	RK	100	1/10W J*
R947,948	0B25539A	RK	1K	1/10W J*
R949,950	0B25539A	RK	1K	1/10W J*
R951,952	0B25539A	RK	1K	1/10W J*
R953,954	0B25539A	RK	1K	1/10W J*
R955,956	0B25539A	RK	1K	1/10W J*
R957,958	0B25539A	RK	1K	1/10W J*
R959,960	0B25539A	RK	1K	1/10W J*
R961,962	0B25563A	RK	10K	1/10W J*
R963,964	0B25539A	RK	1K	1/10W J*
R965,966	0B25539A	RK	1K	1/10W J*
R967	0B25563A	RK	10K	1/10W J*
R968,969	0B25539A	RK	1K	1/10W J*
R970	0B09717A	RK	47K	1/6W J
R971,972	0B25539A	RK	1K	1/10W J*
R973,974	0B25539A	RK	1K	1/10W J*
R975,976	0B25539A	RK	1K	1/10W J*
R979,980	0B25539A	RK	1K	1/10W J*
R981	0B25539A	RK	1K	1/10W J*
R984,985	0B25539A	RK	1K	1/10W J*
R986	0B25539A	RK	1K	1/10W J*
R987,988	0B25515A	RK	100	1/10W J*
R989,990	0B25515A	RK	100	1/10W J*
R991	0B09701A	RK	10K	1/6W J
R992,993	0B25523A	RK	220	1/10W J*
R994	0B25523A	RK	220	1/10W J*
C801	0B41298A	CML	0.1 50V J	
C803	0B41298A	CML	0.1 50V J	
C805	0B41298A	CML	0.1 50V J	
C807,808	0B43092A	CC	0.1 25V Z*	
C809,810	0B43092A	CC	0.1 25V Z*	
C811	0B40063A	CE	100 10V	
C812,813	0B43092A	CC	0.1 25V Z*	
C814,815	0B43092A	CC	0.1 25V Z*	
C816,817	0B43092A	CC	0.1 25V Z*	
C818,819	0B41298A	CML	0.1 50V J	
C820,821	0B05681A	CML	0.01 50V J	
C822,823	0B40077A	CE	47 16V	
C824	0B40077A	CE	47 16V	
C825,826	0B43092A	CC	0.1 25V Z*	
C827,828	0B43061A	CC	22P 50V J*	
C829	0B05880A	CC	470P 50V K	
C830,831	0B43092A	CC	0.1 25V Z*	
C832,833	0B43092A	CC	0.1 25V Z*	
C834	0B43092A	CC	0.1 25V Z*	
C835,836	0B40077A	CE	47 16V	

Schematic Ref. No.	Part No.	Description
C837,838	0B43092A	CC 0.1 25V Z*
C839,840	0B43092A	CC 0.1 25V Z*
C841	0B40074A	CE 10 16V
C842	0B41298A	CML 0.1 50V J
C843	0B40715A	CE 10 16V (LN)
C844	0B41298A	CML 0.1 50V J
C845,846	0B40715A	CE 10 16V (LN)
C847	0B41410A	CPP 1000P 50V J
C848	0B41394A	CPP 220P 50V J
C849	0B41410A	CPP 1000P 50V J
C850	0B41394A	CPP 220P50VJ
C851	0B41298A	CML 0.1 50V J
C852	0B41410A	CPP 1000P 50V J
C853	0B41394A	CPP 220P 50V J
C854	0B41410A	CPP 1000P 50V J
C855	0B41394A	CPP 220P 50V J
C856	0B43092A	CC 0.1 25V Z*
C857	0B40074A	CE 10 16V
C858	0B41298A	CML 0.1 50V J
C859	0B40715A	CE 10 16V (LN)
C860	0B41298A	CML 0.1 50V J
C861,862	0B40715A	CE 10 16V (LN)
C863	0B41410A	CPP 1000P 50V J
C864	0B41394A	CPP 220P 50V J
C865	0B41410A	CPP 1000P 50V J
C866	0B41394A	CPP 220P 50V J
C867	0B41298A	CML 0.1 50V J
C868	0B41410A	CPP 1000P 50V J
C869	0B41394A	CPP 220P 50V J
C870	0B41410A	CPP 1000P 50V J
C871	0B41394A	CPP 220P 50V J
C872	0B43092A	CC 0.1 25V Z*
C873	0B40074A	CE 10 16V
C874	0B41298A	CML 0.1 50V J
C875	0B40715A	CE 10 16V (LN)
C876	0B41298A	CML 0.1 50V J
C877,878	0B40715A	CE 10 16V (LN)
C879	0B41410A	CPP 1000P 50V J
C880	0B41394A	CPP 220P 50V J
C881	0B41410A	CPP 1000P 50V J
C882	0B41394A	CPP 220P 50V J
C883	0B41298A	CML 0.1 50V J
C884	0B41410A	CPP 1000P 50V J
C885	0B41394A	CPP 220P 50V J
C886	0B41410A	CPP 1000P 50V J
C887	0B41394A	CPP 220P 50V J
C888,889	0B43092A	CC 0.1 25V Z*
C890,891	0B43092A	CC 0.1 25V Z*
C892,893	0B43092A	CC 0.1 25V Z*
C894,895	0B43092A	CC 0.1 25V Z*
C896,897	0B43092A	CC 0.1 25V Z*
C898	0B43092A	CC 0.1 25V Z*
C899,900	0B40654A	CE 100 25V (LN)
C901,902	0B40077A	CE 47 16V
C903	0B40063A	CE 100 10V
C904,905	0B43092A	CC 0.1 25V Z*
C906	0B40063A	CE 100 10V
C907,908	0B40074A	CE 10 16V
C909	0B43092A	CC 0.1 25V Z*
C910	0B40074A	CE 10 16V
C911	0B43092A	CC 0.1 25V Z*
C912	0B40074A	CE 10 16V
C913,914	0B43078A	CC 2200P 50V K*
C915	0B43092A	CC 0.1 25V Z*
C916	0B40074A	CE 10 16V
C917	0B43092A	CC 0.1 25V Z*
C918	0B40074A	CE 10 16V
C919	0B43092A	CC 0.1 25V Z*
C920	0B40063A	CE 100 10V
C921,922	0B43092A	CC 0.1 25V Z*
C923	0B43092A	CC 0.1 25V Z*
C924	0B41298A	CML 0.1 50V J
C925,926	0B43211A	CC 1000P 50V J*
C927,928	0B43211A	CC 1000P 50V J*

Schematic Ref. No.	Part No.	Description
C929	0B43211A	CC 1000P 50V J*
C930,931	0B41298A	CML 0.1 50V J
C932	0B43211A	CC 1000P 50V J*
C933,934	0B43092A	CC 0.1 25V Z*
C935,936	0B43092A	CC 0.1 25V Z*
C937,938	0B43092A	CC 0.1 25V Z*
C939	0B43211A	CC 1000P 50V J*
C993	0B43092A	CC 0.1 25V Z*
C1000	0B47117A	CC 0.1 50V Z
C1002	0B47117A	CC 0.1 50V Z
C1003	0B41298A	CML 0.1 50V J
C1004	0B47117A	CC 0.1 50V Z
CP3	0B81463A	6P T-Post
CP4	0B81465A	8P T-Post
CP8	0B81460A	3P T-Post
CP9	0B81460A	3P T-Post
CP10	0B84086A	11P T-Post
CP11	0B84085A	10P T-Post
CP12	0B81464A	7P T-Post
CP13	0B81462A	5P T-Post
CP14	0B81463A	6P T-Post
CP33	0B81459A	2P T-Post
CP801,802	0B10807A	Tos Link TORX178A
CP803	0B12811A	Toslink TOTX178A
CP804	0B10824A	IC Photocoupler PC918X
J100	0B25612A	RK 0 1/10W J*
J101	0B25523A	RK 220 1/10W J*
J104,105	0B25612A	RK 0 1/10W J*
J106	0B25612A	RK 0 1/10W J*
JK801	0B85452A	13P Mini Socket
JK802	0B80668A	DIN 13P Socket
PJ801	0B85544A	Pin Jack 3P AU O
PJ804,805	0B80774A	Mini Jack H

2.2. P. Supply P.C.B. Ass'y

Schematic Ref. No.	Part No.	Description
	BA10136A	**P. Supply P.C.B Ass'y (USA, CAN)**
	BA10144A	**P. Supply P.C.B Ass'y (JPN)**
	BA10145A	**P. Supply P.C.B Ass'y (UK, AUS, EP, CH, HK, KR, ML)**
	BA10146A	**P. Supply P.C.B Ass'y (OTR, DA, TW) [SS-10/11/21]**
ICP401	0B11248A	IC Protector ICP-N5 0.25A
U401	0B11240A	IC NJM78L05A
U402	0B12907A	IC PQ12RF1
U406	0B17033A	IC NJM78M12FA
ZD401	0B12314A	ZD MTZ12V B
Q401	2B10073A	TR 2SD1761E/D
Q402,403	0B06100A	TR 2SC945
Q404	0B06100A	TR 2SC945
Q405,406	0B10068A	TR DTC114ES
Q407	0B10058A	TR DTA114ES
Q408	0B06100A	TR 2SC945
D401,402	0B12586A	SID 1N4002
D403,404	0B12586A	SID 1N4002
D405	0B12249A	SID 1SS133
D406,407	0B12586A	SID 1N4002
D410,411	0B12874A	SID 2W02G
D412	0B10543A	SID GBU8D
T1	0B50342A	Sub Transformer (JPN, USA, CAN)
	0B50343A	Sub Transformer (Except JPN, USA, CAN)

Schematic Ref. No.	Part No.	Description
T2	0B50344A	Power Transformer (JPN, USA, CAN)
	0B50345A	Power Transformer (Except JPN, USA, CAN)
R403	0B24083A	RF 180 1W
R404	0B24442R	RF 22 1W
R405,406	0B09709A	RK 22K 1/6W J
R407	0B09677A	RK 1K 1/6W J
R408	0B09701A	RK 10K 1/6W J
R409	0B20057A	RK 4.7M 1/2W J (JPN)
	0B21652R	RK 4.7M 1/2W (USA, CAN)
R410	0B09703A	RK 12K 1/6W J
R411,412	0B09629A	RK 10 1/6W J
R413	0B09629A	RK 10 1/6W J
R416	0B09717A	RK 47K 1/6W J
R418	0B09677A	RK 1K 1/6W J
R419	0B09656A	RK 130 1/6W J
R420	0B09655A	RK 120 1/6W J
R421	0B09685A	RK 2.2K 1/6W J
R422	0B80082A	Jumper Wire 5mm (JPN, OTR, USA, CAN, DA, TW)
R423	0B09613A	RK 2.2 1/6W J
C401	0B40094A	CE 470 25V
C403	0B40078A	CE 100 16V
C404,405	0B47134A	CC 0.022 50V Z
C406	0B47134A	CC 0.022 50V Z
C407,408	0B40078A	CE 100 16V
C409,410	0B47134A	CC 0.022 50V Z
C411	0B40078A	CE 100 16V
C412	0B40112A	CE 1 50V
C413	0B40113A	CE 2.2 50V
C414,415	0B09591A	CPP 0.01 100V J
C416	0B40097R	CE 3300 25V
C417	0B41298A	CML 0.1 50V J
C418	0B40077A	CE 47 16V
C419	0B41298A	CML 0.1 50V J
C420,421	0B09591A	CPP 0.01 100V J
C422	0B40085R	CE 4700 16V
C423	0B41298A	CML 0.1 50V J
C424	0B40081A	CE 470 16V
C425	0B41298A	CML 0.1 50V J
C426,427	0B09591A	CPP 0.01 100V J
C428	0B41298A	CML 0.1 50V J
C429	0B42616A	CE 1000 25V
C430	0B41298A	CML 0.1 50V J
C431	0B40078A	CE 100 16V
C432	0B41298A	CML 0.1 50V J
C433	0B40078A	CE 100 16V
C434	0B41298A	CML 0.1 50V J
C435	0B40078A	CE 100 16V
C436	0B41298A	CML 0.1 50V J
C437,438	0B09591A	CPP 0.01 100V J
C439	0B40082A	CE 1000 16V
C440	0B47117A	CC 0.1 50V Z
C441	0B40082A	CE 1000 16V
C442	0B47117A	CC 0.1 50V Z
C443	0B42616A	CE 1000 25V
C444,445	0B09591A	CPP 0.01 100V J
C446	0B41825A	CC 4700P 400V (Except JPN)
	0B41826A	CC 4700P 250V (JPN)
C447	0B40112A	CE 1 50V
C448	0B41298A	CML 0.1 50V J
C449,450	0B47117A	CC 0.1 50V Z (UK, AUS, EP, CH, HK, KR, ML)
CN1	0B85527A	1P Connector Ass'y CN-1
CN2	0B85402A	12P Connector Ass'y CN-2
CN3	0B85403A	6PConnector Ass'y CN-3
CN4	0B85404A	8PConnector Ass'y CN-4

Schematic Ref. No.	Part No.	Description
CN5	0B85405A	3PConnector Ass'y CN-5
CN6	0B85406A	8PConnector Ass'y CN-6
CN14	0B85414A	6PConnector Ass'y CN-14
CN17	0B85528A	1P Connector Ass'y CN-17
CN20	0B85456A	1P Connector Ass'y CN-20
CN21	0B85529A	1P Connector Ass'y CN-21 (Except KR)
CN22	0B85530A	1P Connector Ass'y CN-22 (JPN, OTR, USA, CAN, DA, TW)
CN23	0B85531A	1P Connector Ass'y CN-23
CN24	0B85532A	1P Connector Ass'y CN-24/28 (UK, AUS, EP, CH, HK, ML)
CN25	0B85533A	1P Connector Ass'y CN-25 (UK, AUS, EP, CH, HK, ML)
CN26	0B85462A	1P Connector Ass'y CN-26 (OTR, DA, TW)
CN27	0B85463A	1P Connector Ass'y CN-27 (OTR, DA, TW)
CN28	0B85460A	1P Connector Ass'y CN-24/28 (OTR, DA, TW)
CN30	0B85475A	1P Connector Ass'y CN-30 (OTR, DA, TW)
CN31	0B85476A	1P Connector Ass'y CN-31 (OTR, DA, TW)
CN32	0B85477A	1P Connector Ass'y CN-32 (OTR, DA, TW)
CN38	0B85497A	1P Connector Ass'y CN-38/42/43
CN45	0B85521A	1-2P Connector A/37
CP2	0B81644A	12P T Post
CP7	0B81461A	4P T-Post
CP16	0B81459A	2P T-Post
F401	0B90872A	Fuse T 5AL250V (Except KR)
F402	0B90853A	FU.F 5A 125V (JPN, OTR, USA, CAN, DA, TW)
	0B90870A	Fuse T 3.15AL250V (UK, AUS, EP, CH, HK, KR, ML)
F403	0B90849A	Fuse F 2A 250V (JPN, OTR, USA, CAN, DA, TW)
	0B90868A	Fuse T 2AL250V (UK, AUS, EP, CH, HK, KR, ML)
F404	0B90849A	Fuse F 2A 250V (JPN, OTR, USA, CAN, DA, TW)
	0B90868A	Fuse T 2AL250V (UK, AUS, EP, CH, HK, KR, ML)
F405	0B90851A	Fuse F 3A 250V (JPN, OTR, USA, CAN, DA, TW)
	0B90870A	Fuse T 3.15AL250V (UK, AUS, EP, CH, HK, KR, ML)
F406	0B90851A	Fuse F 3A 250V (JPN, OTR, USA, CAN, DA, TW)
	0B90870A	Fuse T 3.15AL250V (UK, AUS, EP, CH, HK, KR, ML)
F407	0B90846A	Fuse 1A 250V F (JPN, OTR, USA, CAN, DA, TW)
	0B90865A	Fuse 1A 250V T (UK, AUS, EP, CH, HK, KR, ML)
F408	0B90846A	Fuse 1A 250V F (JPN, OTR, USA, CAN, DA, TW)
	0B90865A	Fuse 1A 250V T (UK, AUS, EP, CH, HK, KR, ML)
F409	0B90846A	Fuse 1A 250V F (JPN, OTR, USA, CAN, DA, TW)
	0B90865A	Fuse 1A 250V T (UK, AUS, EP, CH, HK, KR, ML)
F410	0B90846A	Fuse 1A 250V F (JPN, OTR, USA, CAN, DA, TW)
	0B90865A	Fuse 1A 250V T (UK, AUS, EP, CH, HK, KR, ML)
FC401,402	0B90757A	Fuse Clip (UK, AUS, EP, CH, HK, ML)
FC403,404	0B90757A	Fuse Clip
FC405,406	0B90757A	Fuse Clip
FC407,408	0B90757A	Fuse Clip
FC409,410	0B90757A	Fuse Clip
FC411,412	0B90757A	Fuse Clip
FC413,414	0B90757A	Fuse Clip
FC415,416	0B90757A	Fuse Clip
FC417,418	0B90757A	Fuse Clip
FC419,420	0B90757A	Fuse Clip
G401	0B80673A	Earth Terminal (USA, CAN)
G402	0B80673A	Earth Terminal
INLET1	0B85361A	AC Inlet UL (USA, CAN)
	0B85362A	AC Inlet EP (JPN, OTR, DA, TW)
OUTLET1	0B85359A	2P AC Outlet (JPN, OTR, USA, CAN, DA, TW)
	0B85417A	AC Outlet (UK, AUS, EP, CH, HK, ML)
PJ401,402	0B80774A	Mini Jack H
RY401	0B90907A	Relay OSZ-SH-112
	0B70285A	Voltage Switch (OTR, DA, TW) (1)
	0B85400A	Terminal Pin K (4)
	0B85465A	3P20 Wire Holder (2)
	0B90924A	Capacitor Cover (1)

2.3. PSW-LED P.C.B. Ass'y

Schematic Ref. No.	Part No.	Description
	BA10138A	**PSW-LED P.C.B. Ass'y (Except JPN)**
	BA10220A	**PSW-LED P.C.B. Ass'y (JPN) [SS-10/11/21]**
ED401	0B12806A	LED Green
ED402	0B10825A	LED Amber GL3HS43
C1	0B41825A	CC 4700P 400V (Except JPN)
	0B41826A	CC 4700P 250V (JPN)
CN7	0B85407A	4PConnector Ass'y CN-7
S1	0B70284A	Power Switch MB-10
	0B90924A	Capacitor Cover (1) (Except JPN)

2.4. Headphone P.C.B. Ass'y

Schematic Ref. No.	Part No.	Description
	BA10139A	**Headphone P.C.B. Ass'y (JPN, OTR, USA, CAN, DA, TW)**
	BA10270A	**Headphone P.C.B. Ass'y (UK, AUS, EP, CH, HK, KR, ML) [SS-10/11/21]**
C2,3	0B05550A	CML 1000P 50V J (UK, AUS, EP, CH, HK, KR, ML)
C4	0B41298A	CML 0.1 50V J (UK, AUS, EP, CH, HK, KR, ML)
CN15	0B85415A	5P Connector Ass'y CN-15
CN16	0B85416A	2P Connector Ass'y CN-16
HJ101	0B85360A	Headphone Jack
	0B85542A	1P Connector Ass'y CN-46/47 (UK, AUS, EP, CH, HK, KR, ML) (1)

2.5. HS1 P.C.B. Ass'y

Schematic Ref. No.	Part No.	Description
	BA10194A	**HS1 P.C.B. Ass'y [SS-10/11/21]**
U403	0B10554A	IC PQ05RF1
CN18	0B85455A	3P Connector Ass'y CN-18/19
	0B85465A	3P20 Wire Holder (1)

2.6. HS2 P.C.B. Ass'y

Schematic Ref. No.	Part No.	Description
	BA10195A	**HS2 P.C.B. Ass'y [SS-10/11/21]**
U404	0B11751A	IC NJM7815FA
CN-19	0B85455A	3P Connector Ass'y CN-18/19
	0B85465A	3P20 Wire Holder (1)

2.7. HS3 P.C.B. Ass'y

Schematic Ref. No.	Part No.	Description
	BA10228A	**HS3 P.C.B. Ass'y [SS-10/11/21]**
U917	0B10554A	IC PQ05RF1
CN34	0B85495A	3P Connector Ass'y CN-34

2.8. HS4 P.C.B. Ass'y

Schematic Ref. No.	Part No.	Description
	BA10229A	**HS4 P.C.B. Ass'y [SS-10/11/21]**
U405	0B11752A	IC NJM7915FA
CN35	0B85455A	3P Connector Ass'y CN-18/19
	0B85465A	3P20 Wire Holder (1)

2.9. Trans-S P.C.B. Ass'y

Schematic Ref. No.	Part No.	Description
	BA10177A	**Trans-S P.C.B. Ass'y [SS-10/11/21]**
CN2	0B85402A	12P Connector Ass'y CN-2

2.10. AC LF P.C.B. Ass'y

Schematic Ref. No.	Part No.	Description
	BA10271A	**AC LF P.C.B. Ass'y (UK, AUS, EP, CH, HK, KR, ML) [SS-10/11/21]**
CN22	0B85530A	1P Connector Ass'y CN-22 (UK, AUS, EP, CH, HK, KR, ML)
CN48	0B85547A	1P Connector Ass'y CN-48 (UK, AUS, EP, CH, HK, KR, ML)
INLET1	0B85362A	AC Inlet EP (UK, AUS, EP, CH, HK, KR, ML)
L1	0B85543A	AC Line Filter (UK, AUS, EP, CH, HK, KR, ML)

2.11. Video P.C.B. Ass'y

Schematic Ref. No.	Part No.	Description
	BA10137A	**Video P.C.B Ass'y NTSC (JPN, USA, CAN, KR, TW)**
	BA10147A	**Video P.C.B. Ass'y PAL (UK, OTR, AUS, EP, CH, DA, HK, ML) [SS-10/11/21]**
U901	0B12877A	IC BA7664FV*
U902,903	0B12875A	IC TC4051BP
U904,905	0B12875A	IC TC4051BP
U906,907	0B12875A	IC TC4051BP
U908,909	0B12862A	IC BA7660FS*
U910	0B12862A	IC BA7660FS*
U911	0B11146A	IC TC4053BP
U912	0B12862A	IC BA7660FS*
U913	0B06270A	IC TC4069UBP
U914	0B10809A	IC NJU3712M*
U915	0B10816A	IC M35013-001
U916	0B06270A	IC TC4069UBP
U918	0B17001A	IC NJM79M05FA
Q901	0B10060A	TR DTA143ES
Q902,903	0B10820A	TR 2SC2058S
Q904	0B10820A	TR 2SC2058S
Q905	0B10068A	TR DTC114ES
Q906	0B10820A	TR 2SC2058S
Q907	0B10174A	TR 2SC2669 O,Y
Q908	0B10094A	TR 2SA1015 (Y)
Q909,910	0B10078A	TR 2SC2240 GR
ZD901	0B10821A	ZD MTZJ2.0B
D901,902	0B12249A	SID 1SS133
D903,904	0B12249A	SID 1SS133
D905,906	0B12249A	SID 1SS133
D907,908	0B12249A	SID 1SS133
D909	0B12836A	SID 1SR35-400A
L901	0B51415A	Coil 15uH

Schematic Ref. No.	Part No.	Description
X901	0B90908A	X'tal 14.31818MHz (JPN, USA, CAN, KR, TW)
	0B90909A	X'tal 17.734475MHz (UK, OTR, AUS, EP, CH, DA, HK, ML)
R901,902	0B09650A	RK 75 1/6W J
R903,904	0B09650A	RK 75 1/6W J
R905,906	0B09650A	RK 75 1/6W J
R907,908	0B09650A	RK 75 1/6W J
R909,910	0B09650A	RK 75 1/6W J
R911,912	0B09701A	RK 10K 1/6W J
R913,914	0B09701A	RK 10K 1/6W J
R915,916	0B09701A	RK 10K 1/6W J
R917,918	0B09649A	RK 68 1/6W J
R919,920	0B09649A	RK 68 1/6W J
R921,922	0B09649A	RK 68 1/6W J
R923,924	0B09701A	RK 10K 1/6W J
R925,926	0B09649A	RK 68 1/6W J
R927,928	0B09650A	RK 75 1/6W J
R929,930	0B09650A	RK 75 1/6W J
R931,932	0B09701A	RK 10K 1/6W J
R933,934	0B09649A	RK 68 1/6W J
R935,936	0B09701A	RK 10K 1/6W J
R937,938	0B09649A	RK 68 1/6W J
R941,942	0B09650A	RK 75 1/6W J
R943,944	0B09717A	RK 47K 1/6W J
R945,946	0B09717A	RK 47K 1/6W J
R947,948	0B09717A	RK 47K 1/6W J
R949,950	0B09717A	RK 47K 1/6W J
R951	0B09717A	RK 47K 1/6W J
R952	0B09693A	RK 4.7K 1/6W J
R953	0B09701A	RK 10K 1/6W J
R954	0B09705A	RK 15K 1/6W J
R955	0B09733A	RK 220K 1/6W J
R956	0B09725A	RK 100K 1/6W J
R957	0B09741A	RK 470K 1/6W J
R958	0B09693A	RK 4.7K 1/6W J
R959	0B09725A	RK 100K 1/6W J
R960	0B09701A	RK 10K 1/6W J
R961	0B09637A	RK 22 1/6W J
R962,963	0B09665A	RK 330 1/6W J
R964	0B09736A	RK 300K 1/6W J
R965,966	0B09717A	RK 47K 1/6W J
R967	0B09665A	RK 330 1/6W J
R968	0B09653A	RK 100 1/6W J
R969	0B09669A	RK 470 1/6W J
R970,971	0B09613A	RK 2.2 1/6W J
R972	0B09705A	RK 15K 1/6W J
R973	0B09679A	RK 1.2K 1/6W J
R974	0B09699A	RK 8.2K 1/6W J
R975,976	0B09705A	RK 15K 1/6W J
R977	0B09721A	RK 68K 1/6W J
R978	0B09665A	RK 330 1/6W J
R979	0B09668A	RK 430 1/6W J
R980	0B09669A	RK 470 1/6W J
R981	0B09629A	RK 10 1/6W J
R982	0B09669A	RK 470 1/6W J
R983	0B09705A	RK 15K 1/6W J
R984	0B09725A	RK 100K 1/6W J
R985	0B09685A	RK 2.2K 1/6W J
R986	0B09707A	RK 18K 1/6W J
R987,988	0B09713A	RK 33K 1/6W J
R989,990	0B09733A	RK 220K 1/6W J
R991	0B09701A	RK 10K 1/6W J
R992	0B09713A	RK 33K 1/6W J
R993,994	0B09741A	RK 470K 1/6W J
R995,996	0B09741A	RK 470K 1/6W J
R1001,1002	0B09736A	RK 300K 1/6W J
R1003,1004	0B09736A	RK 300K 1/6W J
R1005,1006	0B09736A	RK 300K 1/6W J
R1007,1008	0B09650A	RK 75 1/6W J
R1009	0B09677A	RK 1K 1/6W J
C901,902	0B41974A	CC 100P 50V J
C903,904	0B41974A	CC 100P 50V J
C905,906	0B41974A	CC 100P 50V J

Schematic Ref. No.	Part No.	Description
C907,908	0B41974A	CC 100P 50V J
C909,910	0B41974A	CC 100P 50V J
C911	0B41974A	CC 100P 50V J
C912	0B40053A	CE 1000 6.3V
C913	0B41974A	CC 100P 50V J
C914,915	0B40074A	CE 10 16V
C916	0B47117A	CC 0.1 50V Z
C917	0B40053A	CE 1000 6.3V
C919,920	0B47117A	CC 0.1 50V Z
C921,922	0B47117A	CC 0.1 50V Z
C923,924	0B47117A	CC 0.1 50V Z
C925,926	0B47117A	CC 0.1 50V Z
C927,928	0B47117A	CC 0.1 50V Z
C929,930	0B47117A	CC 0.1 50V Z
C931,932	0B40074A	CE 10 16V
C933	0B40074A	CE 10 16V
C934	0B40053A	CE 1000 6.3V
C936	0B40053A	CE 1000 6.3V
C938	0B40053A	CE 1000 6.3V
C940	0B47117A	CC 0.1 50V Z
C941,942	0B40074A	CE 10 16V
C943	0B40074A	CE 10 16V
C944	0B40053A	CE 1000 6.3V
C946	0B40053A	CE 1000 6.3V
C948	0B40053A	CE 1000 6.3V
C950	0B47117A	CC 0.1 50V Z
C951,952	0B40074A	CE 10 16V
C953	0B40074A	CE 10 16V
C954	0B40053A	CE 1000 6.3V
C956	0B40053A	CE 1000 6.3V
C958	0B40053A	CE 1000 6.3V
C960,961	0B47117A	CC 0.1 50V Z
C962,963	0B40074A	CE 10 16V
C964	0B40053A	CE 1000 6.3V
C966	0B40078A	CE 100 16V
C968	0B47117A	CC 0.1 50V Z
C969	0B40077A	CE 47 16V
C970	0B47117A	CC 0.1 50V Z
C971	0B47300A	CC 0.01 50V M
C972	0B47213A	CC 220P 50V J
C973	0B47210A	CC 120P 50V J
C974	0B47117A	CC 0.1 50V Z
C975	0B47006A	CC 820P 50V K
C976	0B40077A	CE 47 16V
C977	0B47117A	CC 0.1 50V Z
C978,979	0B41708A	CC 22P 50V J
C980	0B40077A	CE 47 16V
C981	0B47117A	CC 0.1 50V Z
C982,983	0B41976A	CC 33P 50V J
C984	0B40115A	CE 4.7 50V
C985	0B40078A	CE 100 16V
C986,987	0B40077A	CE 47 16V
C988	0B47013A	CC 3300 50V K
C989	0B40115A	CE 4.7 50V
C990	0B41975A	CC 10P 50V C
C991,992	0B47117A	CC 0.1 50V Z
C994	0B40069A	CE 2200 10V
C995,996	0B47117A	CC 0.1 50V Z
C997	0B40063A	CE 100 10V
C998,999	0B47117A	CC 0.1 50V Z
C1000	0B40074A	CE 10 16V
C1001	0B40053A	CE 1000 6.3V
C1002	0B47117A	CC 0.1 50V Z
C1010,1011	0B47117A	CC 0.1 50V Z
C1012,1013	0B47117A	CC 0.1 50V Z
C1014	0B41974A	CC 100P 50V J
CN13	0B85413A	5PConnector Ass'y CN-13
CP5	0B81460A	3P T-Post
CP34	0B81635A	3P T-Post
PJ901,902	0B85364A	3P Pin Jack AU Y
PJ903	0B85363A	2P Pin Jack AU Y
PJ904,905	0B85365A	3P S Jack W/SW
PJ906	0B85365A	3P S Jack W/SW

2.12. Analog P.C.B. Ass'y

Schematic Ref. No.	Part No.	Description
	BA10134A	**Analog P.C.B Ass'y (OTR, USA, CAN, CH, DA, HK, KR, ML, TW)**
	BA10142A	**Analog P.C.B Ass'y (JPN)**
	BA10143A	**Analog P.C.B Ass'y (UK, AUS, EP) [SS-10/11/21]**
U102,103	0B06124A	IC NJM4558D
U104,105	0B06124A	IC NJM4558D
U107,108	0B10812A	IC LC78211
U109	0B10814A	IC LC78213
U110,111	0B11713A	IC UPC4570C
U112,113	0B11713A	IC UPC4570C
U114,115	0B11713A	IC UPC4570C
U116,117	0B11713A	IC UPC4570C
U118,119	0B12879A	IC TC9459N
U120	0B12879A	IC TC9459N
U121,122	0B12878A	IC TC9184AP
U123,124	0B11713A	IC UPC4570C
U125,126	0B11713A	IC UPC4570C
U127,128	0B10879A	IC NJM2114D
U129	0B10879A	IC NJM2114D
U130	0B10743A	IC NJM4556D
U132	0B06124A	IC NJM4558D
U133	0B12841A	IC LC72722PM* (UK, AUS, EP)
U134	0B06169A	IC TC4066BP
U135	0B11713A	IC UPC4570C
Q101	0B06299A	TR 2SC2878
Q102	0B10058A	TR DTA114ES
Q103	0B10068A	TR DTC114ES
Q104	0B06299A	TR 2SC2878
Q105	0B10058A	TR DTA114ES
Q106	0B10068A	TR DTC114ES
Q107,108	0B06299A	TR 2SC2878
Q109	0B10058A	TR DTA114ES
Q110	0B10068A	TR DTC114ES
Q111,112	0B06299A	TR 2SC2878
Q115	0B06299A	TR 2SC2878
Q118,119	0B06299A	TR 2SC2878
Q120	0B06299A	TR 2SC2878
Q123,124	0B06299A	TR 2SC2878
Q125	0B06100A	TR 2SC945
Q126,127	0B10104A	TR DTC114TS
Q128	0B10068A	TR DTC114ES
Q129	0B06100A	TR 2SC945
Q130	0B10058A	TR DTA114ES
Q131	0B10068A	TR DTC114ES
D101,102	0B12249A	SID 1SS133
D103,104	0B12249A	SID 1SS133
D105,106	0B12249A	SID 1SS133
D107,108	0B12249A	SID 1SS133
D109,110	0B12249A	SID 1SS133
D111,112	0B12249A	SID 1SS133
D113,114	0B12249A	SID 1SS133
D115	0B12249A	SID 1SS133
L101	0B51183A	Inductor 100uH
L102,103	0B51178A	Coil 39uH
X101	0B90919A	X'Tal 4.332MHz (UK, AUS, EP)
R101	0B09725A	RK 100K 1/6W J
R102	0B09653A	RK 100 1/6W J
R103	0B09717A	RK 47K 1/6W J
R104	0B09725A	RK 100K 1/6W J
R105	0B09653A	RK 100 1/6W J
R106	0B09717A	RK 47K 1/6W J
R107	0B09725A	RK 100K 1/6W J
R108	0B09653A	RK 100 1/6W J
R109	0B09717A	RK 47K 1/6W J
R110	0B09725A	RK 100K 1/6W J
R111	0B09653A	RK 100 1/6W J
R112	0B09717A	RK 47K 1/6W J
R113	0B09725A	RK 100K 1/6W J
R114	0B09653A	RK 100 1/6W J
R115	0B09717A	RK 47K 1/6W J
R116	0B09725A	RK 100K 1/6W J
R117	0B09653A	RK 100 1/6W J
R118	0B09717A	RK 47K 1/6W J
R119	0B09725A	RK 100K 1/6W J
R120	0B09653A	RK 100 1/6W J
R121	0B09717A	RK 47K 1/6W J
R122	0B09725A	RK 100K 1/6W J
R123	0B09653A	RK 100 1/6W J
R124	0B09717A	RK 47K 1/6W J
R125	0B09725A	RK 100K 1/6W J
R126	0B09653A	RK 100 1/6W J
R127	0B09717A	RK 47K 1/6W J
R128	0B09725A	RK 100K 1/6W J
R129	0B09653A	RK 100 1/6W J
R130	0B09717A	RK 47K 1/6W J
R131	0B09725A	RK 100K 1/6W J
R132	0B09653A	RK 100 1/6W J
R133	0B09717A	RK 47K 1/6W J
R134	0B09725A	RK 100K 1/6W J
R135	0B09653A	RK 100 1/6W J
R136	0B09717A	RK 47K 1/6W J
R137	0B09725A	RK 100K 1/6W J
R138	0B09677A	RK 1K 1/6W J
R139	0B09725A	RK 100K 1/6W J
R140	0B09677A	RK 1K 1/6W J
R141	0B09725A	RK 100K 1/6W J
R142	0B09677A	RK 1K 1/6W J
R143	0B09725A	RK 100K 1/6W J
R144,145	0B09677A	RK 1K 1/6W J
R146	0B09725A	RK 100K 1/6W J
R147	0B09677A	RK 1K 1/6W J
R148,149	0B09701A	RK 10K 1/6W J
R150	0B09701A	RK 10K 1/6W J
R151	0B09693A	RK 4.7K 1/6W J
R152	0B09709A	RK 22K 1/6W J
R154	0B80082A	Jumper Wire 5mm
R155	0B09693A	RK 4.7K 1/6W J
R156	0B09709A	RK 22K 1/6W J
R158	0B80082A	Jumper Wire 5mm
R159	0B09653A	RK 100 1/6W J
R160	0B09717A	RK 47K 1/6W J
R161	0B09653A	RK 100 1/6W J
R162	0B09717A	RK 47K 1/6W J
R163	0B09689A	RK 3.3K 1/6W J
R164	0B09685A	RK 2.2K 1/6W J
R165	0B09689A	RK 3.3K 1/6W J
R166	0B09685A	RK 2.2K 1/6W J
R167	0B09689A	RK 3.3K 1/6W J
R168	0B09685A	RK 2.2K 1/6W J
R169	0B09689A	RK 3.3K 1/6W J
R170	0B09685A	RK 2.2K 1/6W J
R171	0B09689A	RK 3.3K 1/6W J
R172	0B09685A	RK 2.2K 1/6W J
R173	0B09689A	RK 3.3K 1/6W J
R174	0B09685A	RK 2.2K 1/6W J
R175	0B09701A	RK 10K 1/6W J
R176	0B09692A	RK 4.3K 1/6W J
R177,178	0B09701A	RK 10K 1/6W J
R179	0B09688A	RK 3.0K 1/6W J
R180,181	0B09701A	RK 10K 1/6W J
R182,183	0B09701A	RK 10K 1/6W J
R184	0B09701A	RK 10K 1/6W J
R185,186	0B09677A	RK 1K 1/6W J
R187	0B09685A	RK 2.2K 1/6W J
R188,189	0B09677A	RK 1K 1/6W J
R190	0B09685A	RK 2.2K 1/6W J
R191,192	0B09677A	RK 1K 1/6W J
R193	0B09685A	RK 2.2K 1/6W J
R194	0B09688A	RK 3.0K 1/6W J
R195	0B09693A	RK 4.7K 1/6W J
R196	0B09701A	RK 10K 1/6W J
R197	0B09670A	RK 510 1/6W J
R198	0B09685A	RK 2.2K 1/6W J
R199	0B09711A	RK 27K 1/6W J
R201	0B09723A	RK 82K 1/6W J
R202	0B09721A	RK 68K 1/6W J
R203	0B09693A	RK 4.7K 1/6W J
R204	0B09727A	RK 120K 1/6W J
R205	0B09741A	RK 470K 1/6W J
R206	0B09670A	RK 510 1/6W J
R207	0B09685A	RK 2.2K 1/6W J
R208	0B09711A	RK 27K 1/6W J
R210	0B09723A	RK 82K 1/6W J
R211	0B09721A	RK 68K 1/6W J
R212	0B09693A	RK 4.7K 1/6W J
R213	0B09727A	RK 120K 1/6W J
R214	0B09741A	RK 470K 1/6W J
R215	0B09653A	RK 100 1/6W J
R216	0B09717A	RK 47K 1/6W J
R217	0B09677A	RK 1K 1/6W J
R218	0B09692A	RK 4.3K 1/6W J
R219	0B09653A	RK 100 1/6W J
R220	0B09717A	RK 47K 1/6W J
R221	0B09677A	RK 1K 1/6W J
R222	0B09692A	RK 4.3K 1/6W J
R223	0B09670A	RK 510 1/6W J
R224	0B09685A	RK 2.2K 1/6W J
R225	0B09711A	RK 27K 1/6W J
R227	0B09723A	RK 82K 1/6W J
R228	0B09721A	RK 68K 1/6W J
R229	0B09693A	RK 4.7K 1/6W J
R230	0B09727A	RK 120K 1/6W J
R231	0B09741A	RK 470K 1/6W J
R232	0B09670A	RK 510 1/6W J
R233	0B09685A	RK 2.2K 1/6W J
R234	0B09711A	RK 27K 1/6W J
R236	0B09723A	RK 82K 1/6W J
R237	0B09721A	RK 68K 1/6W J
R238	0B09693A	RK 4.7K 1/6W J
R239	0B09727A	RK 120K 1/6W J
R240	0B09741A	RK 470K 1/6W J
R241	0B09653A	RK 100 1/6W J
R242	0B09717A	RK 47K 1/6W J
R243	0B09677A	RK 1K 1/6W J
R244	0B09681A	RK 1.5K 1/6W J
R245	0B09677A	RK 1K 1/6W J
R246	0B09717A	RK 47K 1/6W J
R247	0B09677A	RK 1K 1/6W J
R248	0B09701A	RK 10K 1/6W J
R249	0B09717A	RK 47K 1/6W J
R250	0B09684A	RK 2K 1/6W J
R251	0B09701A	RK 10K 1/6W J
R252	0B09715A	RK 39K 1/6W J
R253	0B09708A	RK 20K 1/6W J
R254	0B09684A	RK 2K 1/6W J
R255	0B09701A	RK 10K 1/6W J
R256	0B09715A	RK 39K 1/6W J
R257	0B09708A	RK 20K 1/6W J
R258	0B09715A	RK 39K 1/6W J
R259	0B09708A	RK 20K 1/6W J
R260	0B09715A	RK 39K 1/6W J
R261	0B09708A	RK 20K 1/6W J
R262	0B09701A	RK 10K 1/6W J
R263	0B09715A	RK 39K 1/6W J
R264	0B09708A	RK 20K 1/6W J
R265	0B09701A	RK 10K 1/6W J
R266,267	0B09715A	RK 39K 1/6W J
R269	0B09717A	RK 47K 1/6W J
R270	0B09676A	RK 910 1/6W J
R271	0B09653A	RK 100 1/6W J
R272	0B09701A	RK 10K 1/6W J
R273	0B09747A	RK 820K 1/6W J
R274	0B09717A	RK 47K 1/6W J
R275	0B09676A	RK 910 1/6W J
R276	0B09653A	RK 100 1/6W J
R277	0B09701A	RK 10K 1/6W J

Schematic Ref. No.	Part No.	Description
R278	0B09717A	RK 47K 1/6W J
R279	0B09676A	RK 910 1/6W J
R280	0B09653A	RK 100 1/6W J
R281	0B09701A	RK 10K 1/6W J
R283	0B09747A	RK 820K 1/6W J
R284	0B09717A	RK 47K 1/6W J
R285	0B09676A	RK 910 1/6W J
R286	0B09653A	RK 100 1/6W J
R287	0B09701A	RK 10K 1/6W J
R288	0B09717A	RK 47K 1/6W J
R289	0B09676A	RK 910 1/6W J
R290	0B09653A	RK 100 1/6W J
R291	0B09701A	RK 10K 1/6W J
R294	0B09717A	RK 47K 1/6W J
R295	0B09676A	RK 910 1/6W J
R296,297	0B09653A	RK 100 1/6W J
R298	0B09701A	RK 10K 1/6W J
R301	0B09676A	RK 910 1/6W J
R302	0B09653A	RK 100 1/6W J
R303	0B09701A	RK 10K 1/6W J
R304	0B09677A	RK 1K 1/6W J
R305	0B09717A	RK 47K 1/6W J
R306,307	0B09695A	RK 5.6K 1/6W J
R308	0B09653A	RK 100 1/6W J
R309	0B09717A	RK 47K 1/6W J
R310	0B09701A	RK 10K 1/6W J
R311	0B80082A	Jumper Wire 5mm
R312	0B09677A	RK 1K 1/6W J
R313	0B09717A	RK 47K 1/6W J
R314	0B09695A	RK 5.6K 1/6W J
R315	0B09653A	RK 100 1/6W J
R316	0B09717A	RK 47K 1/6W J
R317	0B09701A	RK 10K 1/6W J
R318	0B80082A	Jumper Wire 5mm
R319	0B09677A	RK 1K 1/6W J
R321	0B09741A	RK 470K 1/6W J
R322	0B09691A	RK 3.9K 1/6W J
R323	0B09682A	RK 1.6K 1/6W J
R324	0B09676A	RK 910 1/6W J
R325	0B09717A	RK 47K 1/6W J
R326	0B09701A	RK 10K 1/6W J
R327	0B09653A	RK 100 1/6W J
R328	0B09677A	RK 1K 1/6W J
R330	0B09741A	RK 470K 1/6W J
R331	0B09691A	RK 3.9K 1/6W J
R332	0B09682A	RK 1.6K 1/6W J
R333	0B09676A	RK 910 1/6W J
R334	0B09717A	RK 47K 1/6W J
R335	0B09701A	RK 10K 1/6W J
R336	0B09653A	RK 100 1/6W J
R337,338	0B09701A	RK 10K 1/6W J
R339,340	0B09701A	RK 10K 1/6W J
R341,342	0B09701A	RK 10K 1/6W J
R343,344	0B09701A	RK 10K 1/6W J
R345,346	0B09701A	RK 10K 1/6W J
R347,348	0B09701A	RK 10K 1/6W J
R349,350	0B09701A	RK 10K 1/6W J
R351,352	0B09701A	RK 10K 1/6W J
R353,354	0B09717A	RK 47K 1/6W J
R355	0B80082A	Jumper Wire 5mm (JPN)
R356	0B80082A	Jumper Wire 5mm (Except JPN)
R357,358	0B09685A	RK 2.2K 1/6W J
R359,360	0B09689A	RK 3.3K 1/6W J
R361,362	0B09653A	RK 100 1/6W J
R363,364	0B09677A	RK 1K 1/6W J (UK, AUS, EP)
R365,366	0B09677A	RK 1K 1/6W J (UK, AUS, EP)
R367	0B09677A	RK 1K 1/6W J (UK, AUS, EP)
R368	0B09701A	RK 10K 1/6W J
R369	0B09677A	RK 1K 1/6W J
R371,372	0B09701A	RK 10K 1/6W J
R373,374	0B09725A	RK 100K 1/6W J

Schematic Ref. No.	Part No.	Description
R375	0B09725A	RK 100K 1/6W J
R376	0B09695A	RK 5.6K 1/6W J
R378	0B09684A	RK 2K 1/6W J
R379,380	0B09653A	RK 100 1/6W J
R381,382	0B09653A	RK 100 1/6W J
R383,384	0B09653A	RK 100 1/6W J
R385,386	0B09653A	RK 100 1/6W J
R387,388	0B09653A	RK 100 1/6W J
R389,390	0B09653A	RK 100 1/6W J
R391,392	0B09653A	RK 100 1/6W J
R393,394	0B09653A	RK 100 1/6W J
R395,396	0B09653A	RK 100 1/6W J
R397,398	0B09653A	RK 100 1/6W J
R399,400	0B09653A	RK 100 1/6W J
R401,402	0B09653A	RK 100 1/6W J
R403	0B09685A	RK 2.2K 1/6W J
R404,405	0B09741A	RK 470K 1/6W J
R406,407	0B09741A	RK 470K 1/6W J
R408	0B09741A	RK 470K 1/6W J
R413,414	0B09741A	RK 470K 1/6W J
R415,416	0B09741A	RK 470K 1/6W J
R417	0B09741A	RK 470K 1/6W J
R418,419	0B09702A	RK 11K 1/6W J
R420,421	0B09705A	RK 15K 1/6W J
R422	0B09747A	RK 820K 1/6W J
R423	0B09677A	RK 1K 1/6W J
R424	0B09671A	RK 560 1/6W J
R425	0B09677A	RK 1K 1/6W J
R426	0B09671A	RK 560 1/6W J
R427	0B09702A	RK 11K 1/6W J
R428	0B09705A	RK 15K 1/6W J
R429	0B09702A	RK 11K 1/6W J
R430	0B09705A	RK 15K 1/6W J
C101,102	0B47027A	CML 470P 50V J
C103	0B47027A	CML 470P 50V J
C104	0B41298A	CML 0.1 50V J
C105	0B40077A	CE 47 16V
C106	0B41298A	CML 0.1 50V J
C107,108	0B47027A	CML 470P 50V J
C109,110	0B47027A	CML 470P 50V J
C111,112	0B47027A	CML 470P 50V J
C113,114	0B41298A	CML 0.1 50V J
C115	0B47027A	CML 470P 50V J
C116	0B41298A	CML 0.1 50V J
C117,118	0B47027A	CML 470P 50V J
C119	0B41298A	CML 0.1 50V J
C120	0B40077A	CE 47 16V
C121,122	0B47027A	CML 470P 50V J
C123,124	0B47027A	CML 470P 50V J
C125,126	0B47027A	CML 470P 50V J
C127	0B41298A	CML 0.1 50V J
C128,129	0B40115A	CE 4.7 50V
C130	0B40115A	CE 4.7 50V
C131,132	0B41298A	CML 0.1 50V J
C133	0B80082A	Jumper Wire 5mm
C134	0B41298A	CML 0.1 50V J
C135,136	0B80082A	Jumper Wire 5mm
C137	0B41298A	CML 0.1 50V J
C138,139	0B80082A	Jumper Wire 5mm
C140	0B80082A	Jumper Wire 5mm
C141,142	0B41298A	CML 0.1 50V J
C143,144	0B41298A	CML 0.1 50V J
C145	0B40768A	CE 4.7 25V (LN)
C146	0B41302A	CML 0.22 50V J
C147	0B05550A	CML 1000P 50VJ
C148	0B80082A	Jumper Wire 5mm
C149	0B40077A	CE 47 16V
C150,151	0B41298A	CML 0.1 50V J
C152	0B40077A	CE 47 16V
C153	0B40768A	CE 4.7 25V (LN)
C154	0B41302A	CML 0.22 50V J
C155	0B05550A	CML 1000P 50VJ
C156	0B80082A	Jumper Wire 5mm
C157	0B40768A	CE 4.7 25V (LN)
C158	0B80082A	Jumper Wire 5mm

Schematic Ref. No.	Part No.	Description
C160	0B80082A	Jumper Wire 5mm
C161	0B40077A	CE 47 16V
C162,163	0B41298A	CML 0.1 50V J
C164	0B40077A	CE 47 16V
C165	0B40768A	CE 4.7 25V (LN)
C166	0B80082A	Jumper Wire 5mm
C168	0B80082A	Jumper Wire 5mm
C169	0B40768A	CE 4.7 25V (LN)
C170	0B41302A	CML 0.22 50V J
C171	0B05550A	CML 1000P 50VJ
C172	0B80082A	Jumper Wire 5mm
C173	0B40077A	CE 47 16V
C174,175	0B41298A	CML 0.1 50V J
C176	0B40077A	CE 47 16V
C177	0B40768A	CE 4.7 25V (LN)
C178	0B41302A	CML 0.22 50V J
C179	0B05550A	CML 1000P 50VJ
C180	0B80082A	Jumper Wire 5mm
C181	0B40077A	CE 47 16V
C182	0B41298A	CML 0.1 50V J
C183	0B40077A	CE 47 16V
C184	0B41298A	CML 0.1 50V J
C185	0B05557A	CML 0.015 50VJ
C186	0B05653A	CML 1500P 50VJ
C187	0B05530A	CML 6800P 50VJ
C188	0B05796A	CML 0.047P 50VJ
C189	0B40708A	CE 1 50V (LN)
C190	0B42668A	CML 100P 50V J
C191	0B41874A	CC 27P 50V J
C192	0B05557A	CML 0.015 50VJ
C193	0B05653A	CML 1500P 50VJ
C194	0B80082A	Jumper Wire 5mm
C195	0B05530A	CML 6800P 50VJ
C196	0B05796A	CML 0.047P 50VJ
C197	0B40708A	CE 1 50V (LN)
C198	0B42668A	CML 100P 50V J
C199	0B41874A	CC 27P 50V J
C200	0B80082A	Jumper Wire 5mm
C201	0B41298A	CML 0.1 50V J
C202,203	0B42668A	CML 100P 50V J
C204	0B41298A	CML 0.1 50V J
C205	0B40077A	CE 47 16V
C206	0B41298A	CML 0.1 50V J
C207	0B05557A	CML 0.015 50VJ
C208	0B05653A	CML 1500P 50VJ
C209	0B05530A	CML 6800P 50VJ
C210	0B05796A	CML 0.047P 50VJ
C211	0B40708A	CE 1 50V (LN)
C212	0B42668A	CML 100P 50V J
C213	0B41874A	CC 27P 50V J
C214	0B41298A	CML 0.1 50V J
C215,216	0B80082A	Jumper Wire 5mm
C217	0B40077A	CE 47 16V
C218	0B41298A	CML 0.1 50V J
C219	0B40708A	CE 1 50V (LN)
C220	0B05557A	CML 0.015 50VJ
C221	0B05653A	CML 1500P 50VJ
C222	0B80082A	Jumper Wire 5mm
C223	0B05530A	CML 6800P 50VJ
C224	0B05796A	CML 0.047P 50VJ
C225	0B40708A	CE 1 50V (LN)
C226	0B42668A	CML 100P 50V J
C227	0B41874A	CC 27P 50V J
C228	0B80082A	Jumper Wire 5mm
C229	0B41298A	CML 0.1 50V J
C230	0B40074A	CE 10 16V
C231	0B05652A	CML 4700P 50VJ
C233	0B40715A	CE 10 16V (LN)
C234	0B80082A	Jumper Wire 5mm
C235,236	0B05796A	CML 0.047P 50VJ
C237	0B41298A	CML 0.1 50V J
C238	0B80082A	Jumper Wire 5mm
C239,240	0B05796A	CML 0.047P 50VJ
C241,242	0B05796A	CML 0.047P 50VJ
C243	0B41298A	CML 0.1 50V J

Schematic Ref. No.	Part No.	Description
C244,245	0B05796A	CML 0.047P 50VJ
C246,247	0B05796A	CML 0.047P 50VJ
C248	0B41298A	CML 0.1 50V J
C249	0B05582A	CML 0.022 50VJ
C250	0B05796A	CML 0.047P 50VJ
C251,252	0B40715A	CE 10 16V (LN)
C253,254	0B40715A	CE 10 16V (LN)
C255,256	0B40715A	CE 10 16V (LN)
C257	0B40074A	CE 10 16V
C258	0B42668A	CML 100P 50V J
C259	0B40074A	CE 10 16V
C260	0B41298A	CML 0.1 50V J
C261	0B40074A	CE 10 16V
C262	0B42668A	CML 100P 50V J
C263	0B40074A	CE 10 16V
C264	0B41298A	CML 0.1 50V J
C265,266	0B40769A	CE 220 16V (LN)
C267	0B40081A	CE 470 16V
C268	0B40112A	CE 1 50V
C269	0B42668A	CML 100P 50V J
C270	0B40074A	CE 10 16V
C271	0B40112A	CE 1 50V
C272	0B42668A	CML 100P 50V J
C273	0B40074A	CE 10 16V
C274	0B40115A	CE 4.7 50V
C275	0B41298A	CML 0.1 50V J
C276	0B40115A	CE 4.7 50V
C277,278	0B05652A	CML 4700P 50VJ
C279,280	0B05550A	CML 1000P 50VJ
C281	0B47117A	CC 0.1 50V Z
C282	0B40074A	CE 10 16V
C283	0B40074A	CE 10 16V
		(UK, AUS, EP)
C284	0B47117A	CC 0.1 50V Z
		(UK, AUS, EP)
C286,287	0B41708A	CC 22P 50V J
		(UK, AUS, EP)
C288	0B47117A	CC 0.1 50V Z
		(UK, AUS, EP)
C289	0B47117A	CC 0.1 50V Z
C290	0B40078A	CE 100 16V
C291,292	0B47117A	CC 0.1 50V Z
C293,294	0B47117A	CC 0.1 50V Z
C295,296	0B47117A	CC 0.1 50V Z
C297	0B47117A	CC 0.1 50V Z
C298	0B41298A	CML 0.1 50V J
C299	0B40078A	CE 100 16V
C300	0B41302A	CML 0.22 50V J
C301,302	0B40078A	CE 100 16V
C303,304	0B41298A	CML 0.1 50V J
C305,306	0B42668A	CML 100P 50V J
C307,308	0B41944A	CC 1000P 50V K
C309	0B41944A	CC 1000P 50V K
C310,311	0B47027A	CML 470P 50V J
		(UK, AUS, EP)
C312,313	0B47027A	CML 470P 50V J
		(UK, AUS, EP)
C314,315	0B47027A	CML 470P 50V J
		(UK, AUS, EP)
C316,317	0B47027A	CML 470P 50V J
		(UK, AUS, EP)
ANT101	0B84964A	Antenna Terminal
CN8	0B85408A	3P Connector Ass'y CN-8
CN9	0B85409A	3P Connector Ass'y CN-9
CN10	0B85410A	11P Connector Ass'y
		CN-10
CN11	0B85411A	10P Connector Ass'y
		CN-11
CN12	0B85412A	7P Connector Ass'y
		CN-12
CN33	0B85494A	2P Connector Ass'y
		CN-33
CN39	0B85498A	1P Connector Ass'y
		CN-39

Schematic Ref. No.	Part No.	Description
CN41	0B85509A	2P Connector Ass'y CN-41
CN42,43	0B85497A	1P Connector Ass'y
		CN-38/42/43
CN44	0B85520A	1-2P Connector A/40
		(JPN, OTR, USA, CAN,
		CH, DA, HK, KR, ML, TW)
CP6	0B81465A	8P T-Post
CP15	0B81462A	5P T-Post
G101,102	0B80673A	Earth Terminal
PJ101	0B85450A	6P Pin Jack AU W R
		(JPN, OTR, USA, CAN,
		CH, DA, HK, KR, ML, TW)
	0B85545A	Pin Jack 6P AU W R
		(UK, AUS, EP)
PJ102	0B85450A	6P Pin Jack AU W R
		(JPN, OTR, USA, CAN,
		CH, DA, HK, KR, ML, TW)
	0B85545A	Pin Jack 6P AU W R
		(UK, AUS, EP)
PJ103	0B85450A	6P Pin Jack AU W R
		(JPN, OTR, USA, CAN,
		CH, DA, HK, KR, ML, TW)
	0B85545A	Pin Jack 6P AU W R
		(UK, AUS, EP)
PJ104	0B85450A	6P Pin Jack AU W R
		(JPN, OTR, USA, CAN,
		CH, DA, HK, KR, ML, TW)
	0B85545A	Pin Jack 6P AU W R
		(UK, AUS, EP)
PJ105	0B85449A	4P Pin Jack AU W R
		(JPN, OTR, USA, CAN,
		CH, DA, HK, KR, ML, TW)
	0B85546A	Pin Jack 4P AU W R
		(UK, AUS, EP)
TU101	BG09939A	Tuner Pack (JPN)
	BG09946A	Tuner Pack (Except JPN)

3. IC BLOCK DIAGRAMS

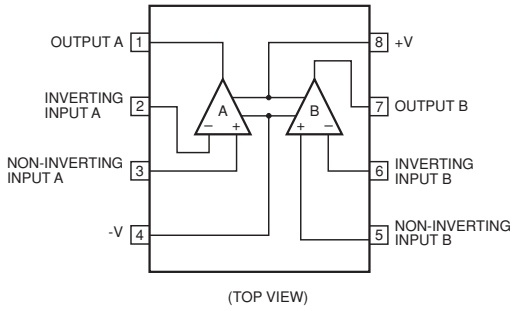

Fig. 3.1 Operational Amp. NJM2100M, 2114, 4556, 4558D, 4570C

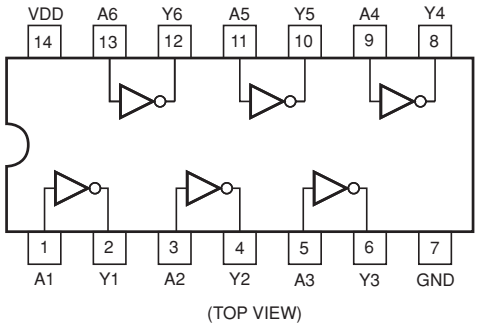

Fig. 3.2 Inverter TC74HCU04AF (U801, 823, 824, 830)/ TC4069UBP (U913, 916)

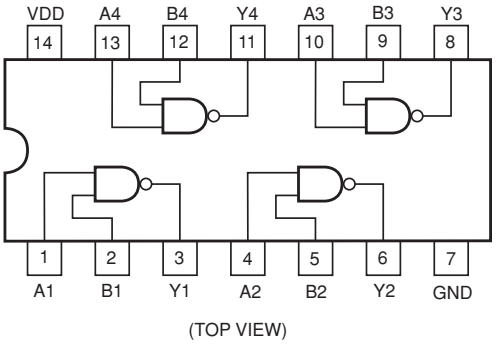

Fig. 3.3 NAND Gate TC74HC08AF (U827-829)

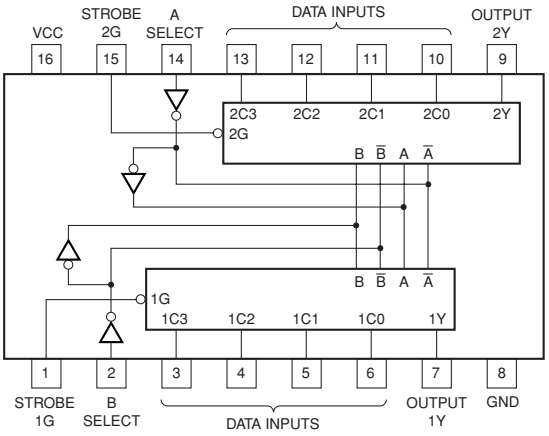

Fig. 3.4 Selector TC74VHC153AF (U810)

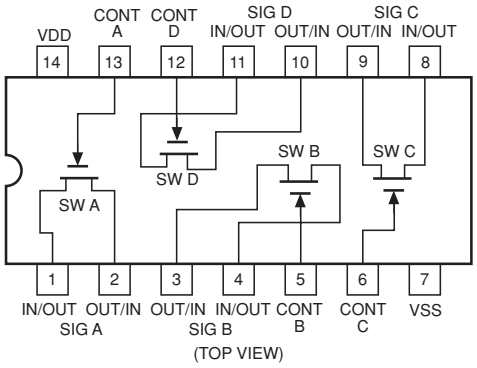

Fig. 3.5 Analog Switch TC4066BP (U134)

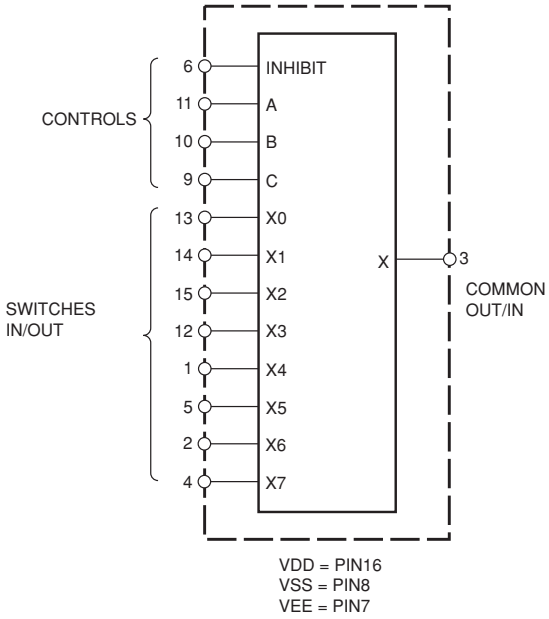

Fig. 3.6 Selector TC4051BP (U902-907)

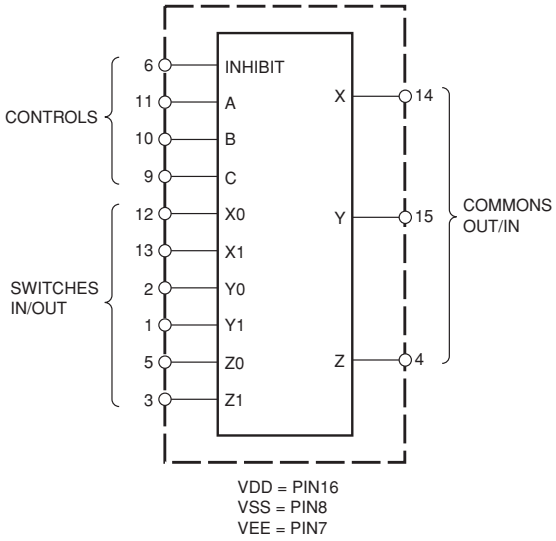

Fig. 3.7 Selector TC4053BP (U911)

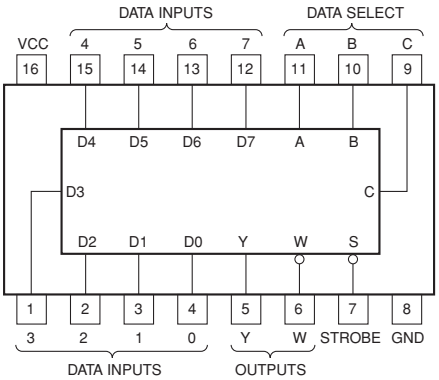

Fig. 3.8 Selector TC74HC151AF (U802)

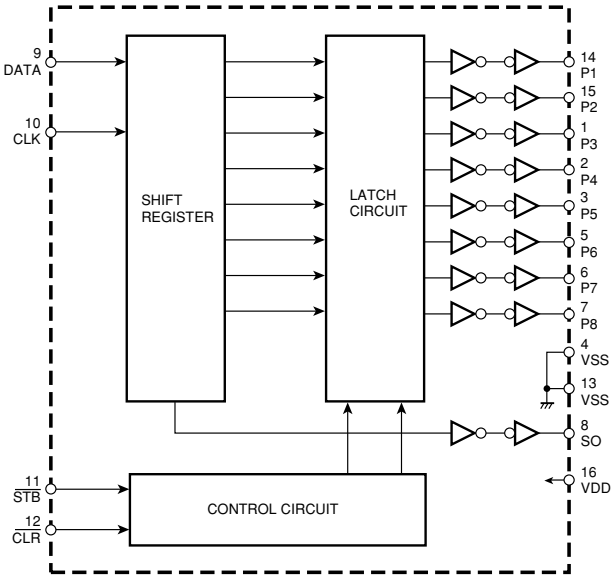

Fig. 3.9 8-bit Serial-to-parallel Converter NJU3712M

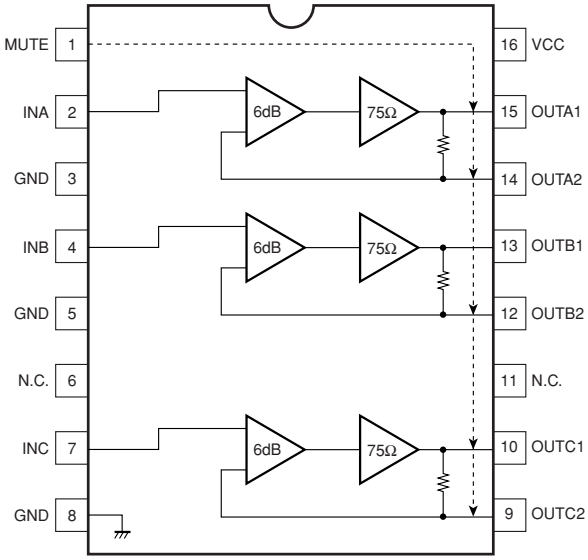

Fig. 3.10 75Ω Driver BA7660FS (U908-910, 912)

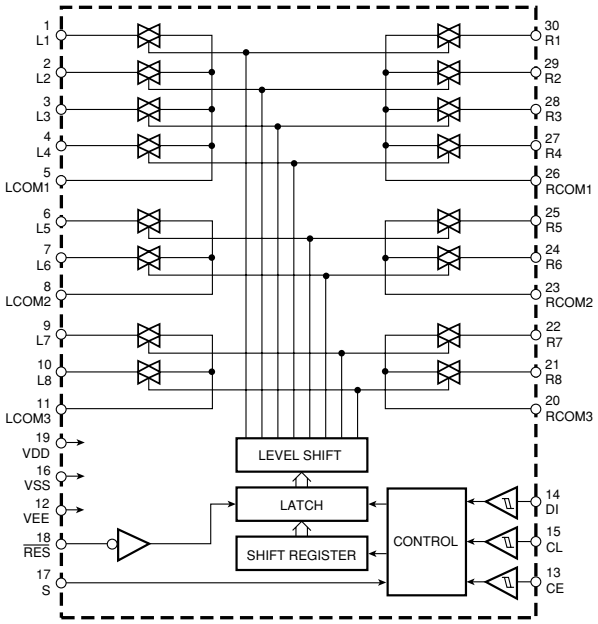

Fig. 3.11 Function Switch LC78211 (U107, 108)

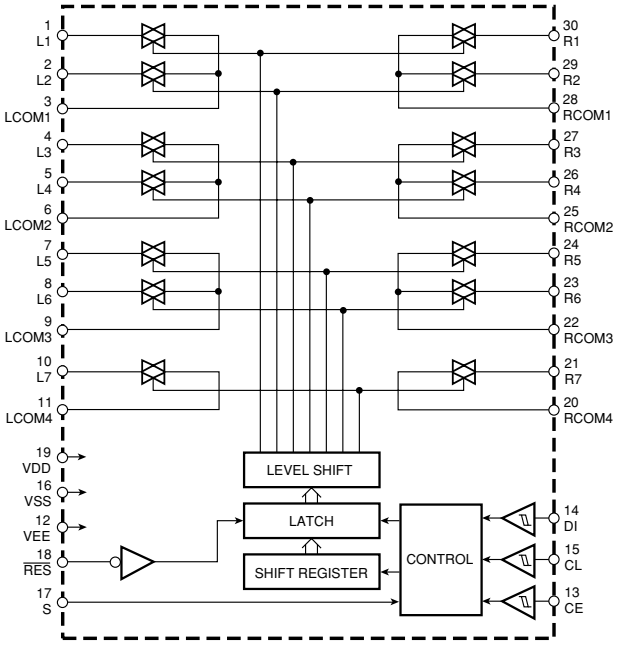

Fig. 3.12 Function Switch LC78213 (U109)

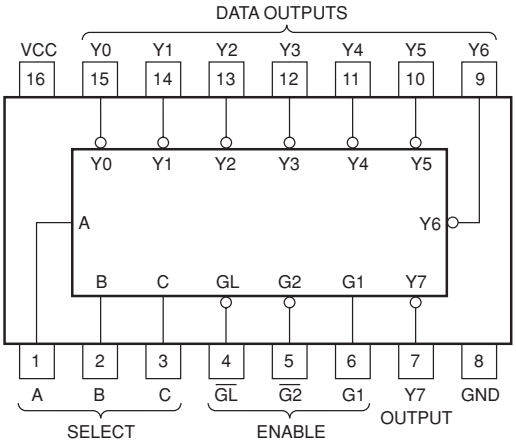

Fig. 3.13 Decoder HD74HC137FP (U814, 815)

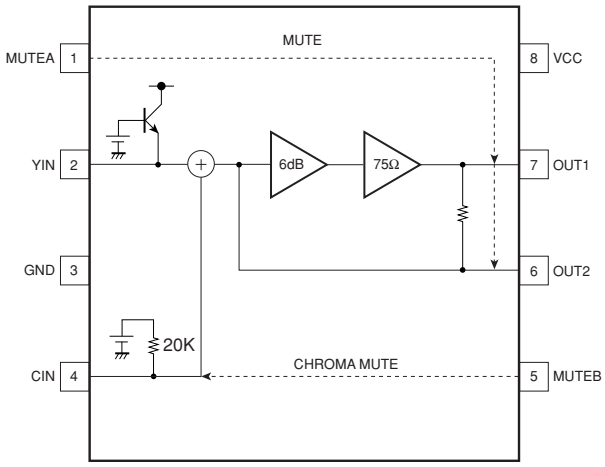

Fig. 3.14 75Ω Driver (Y/C Mixing Type) BA7664FV (U901)

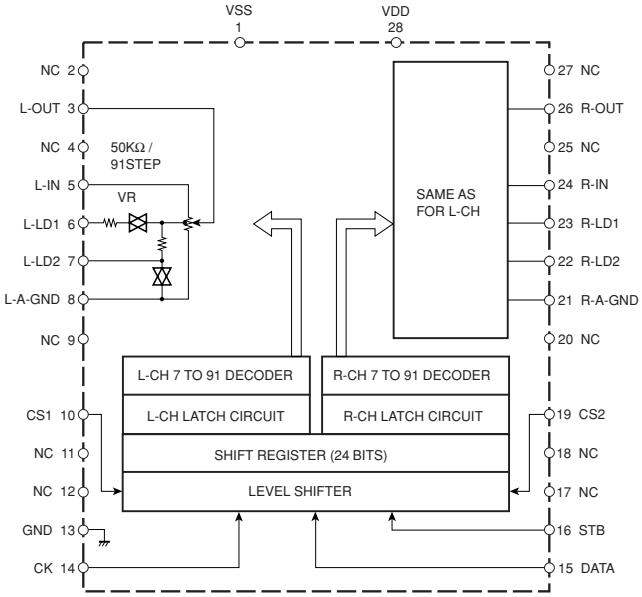

Fig. 3.15 Electronic Volume TC9459N (U118, 119, 120)

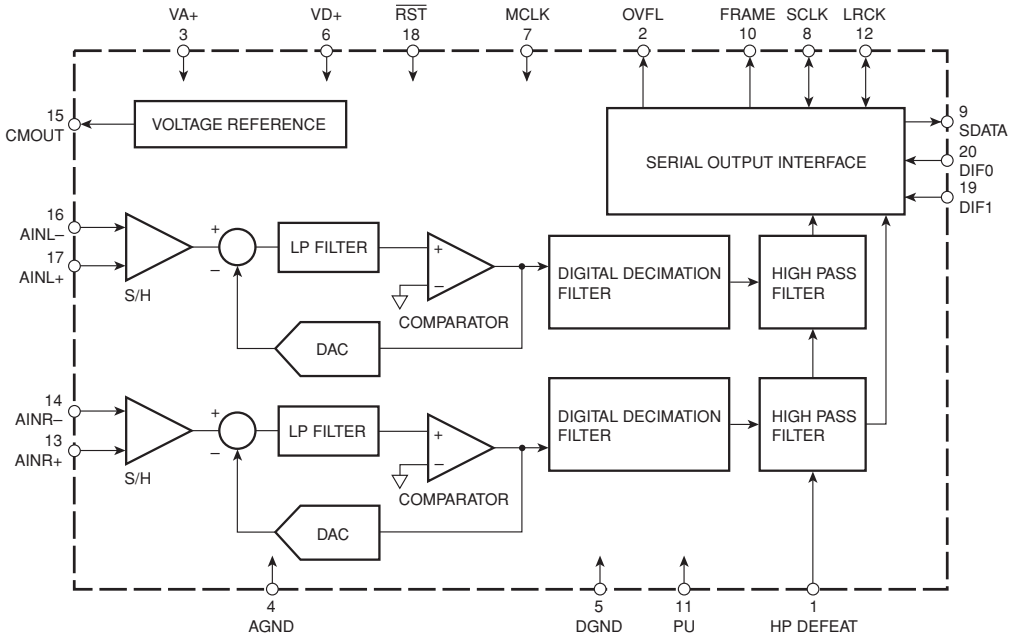

Fig. 3.16 Δ–∑ Audio A/D Converter CS5360-KS (U804)

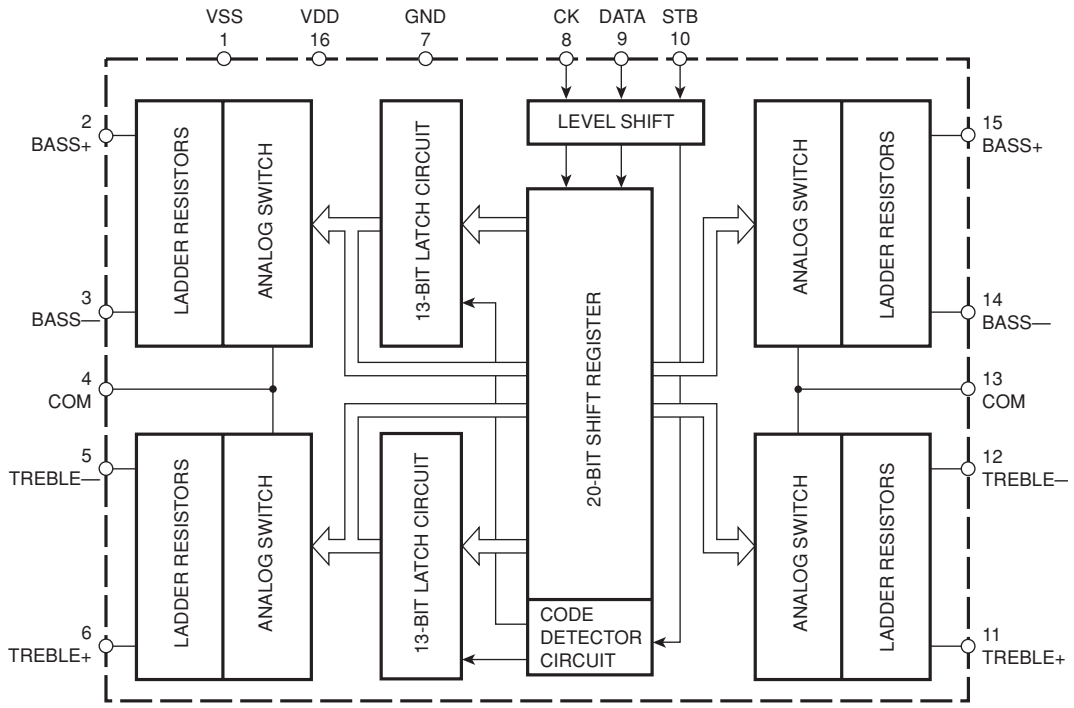

Fig. 3.17 Electronic Tone Controller TC9184AP (U121, 122)

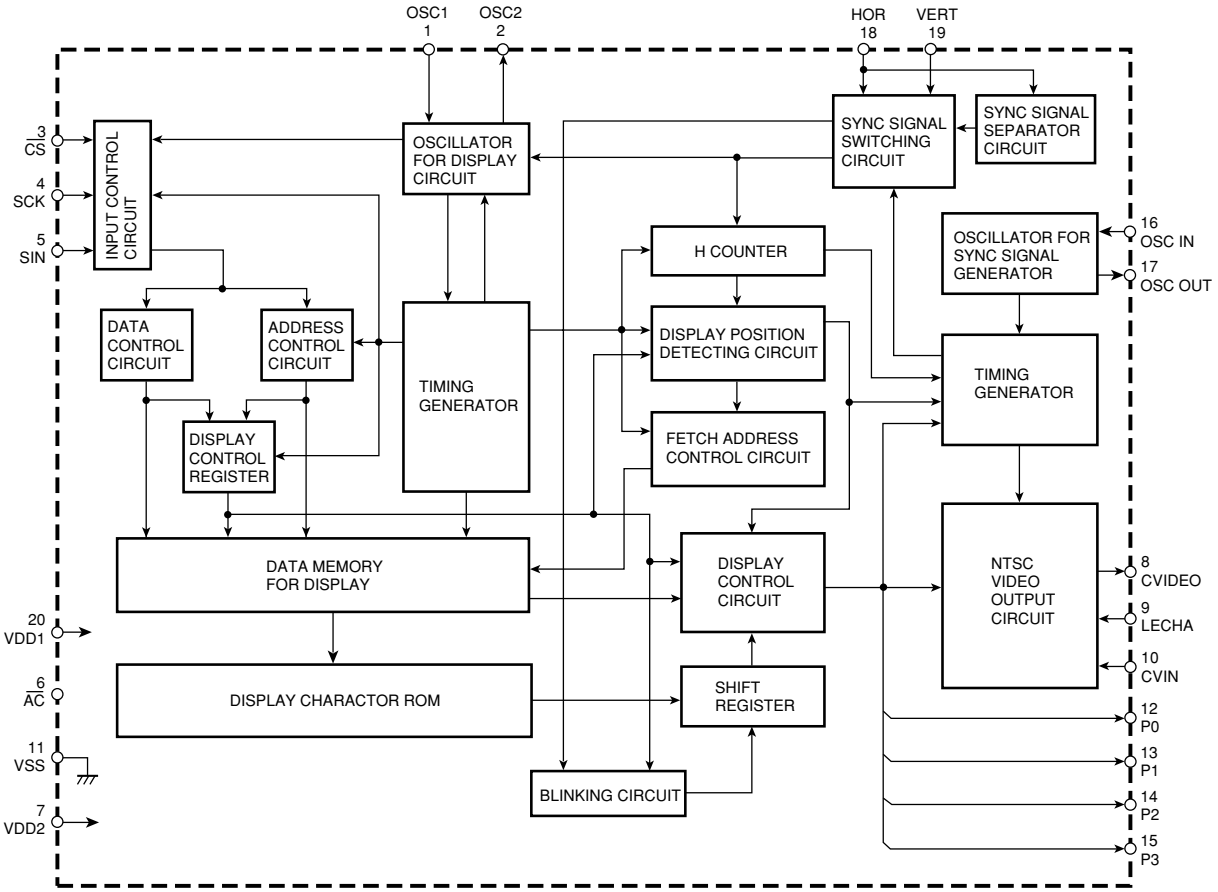

Fig. 3.18 Character/Pattern Display Controller M35013-001(U915)

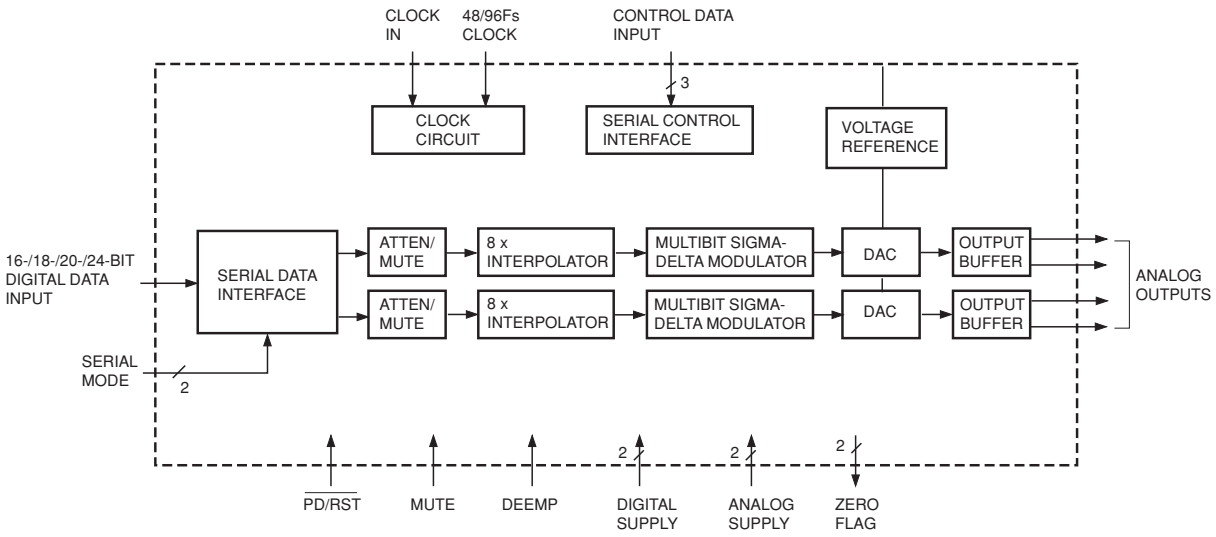

Fig. 3.19 A/D Converter AD1855 (U807-809)

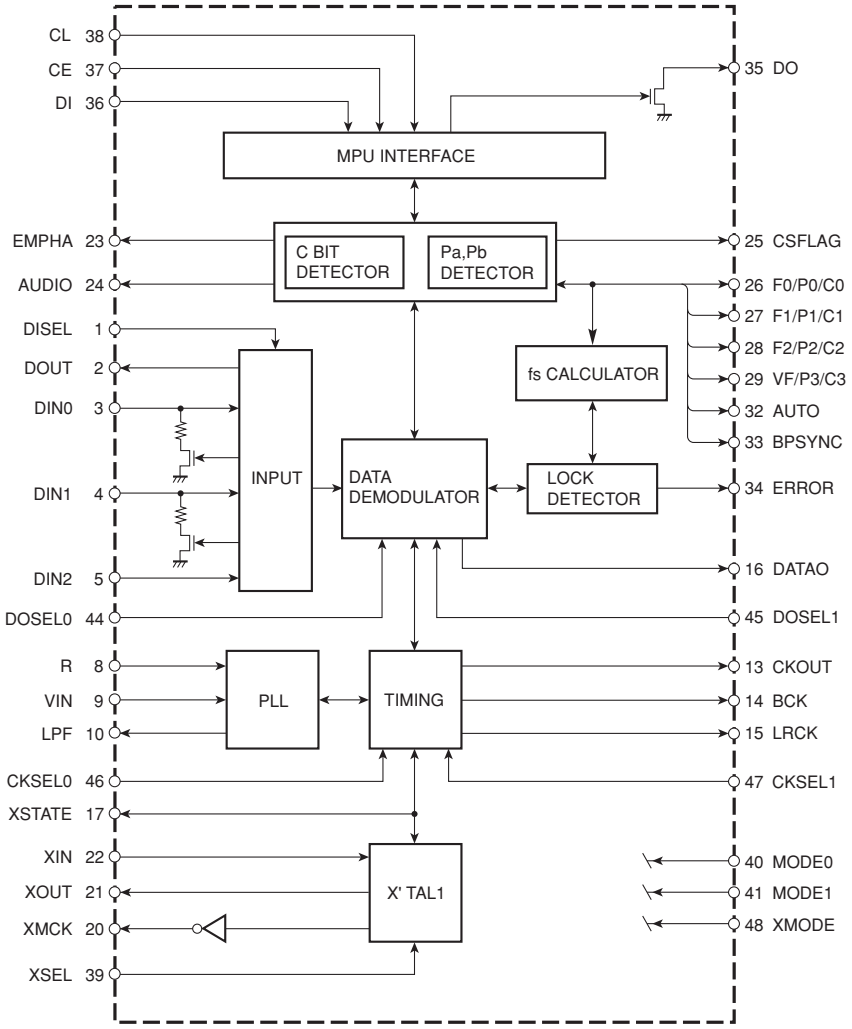

Fig. 3.20 Digital audio interface receiver LC89055W (U803)

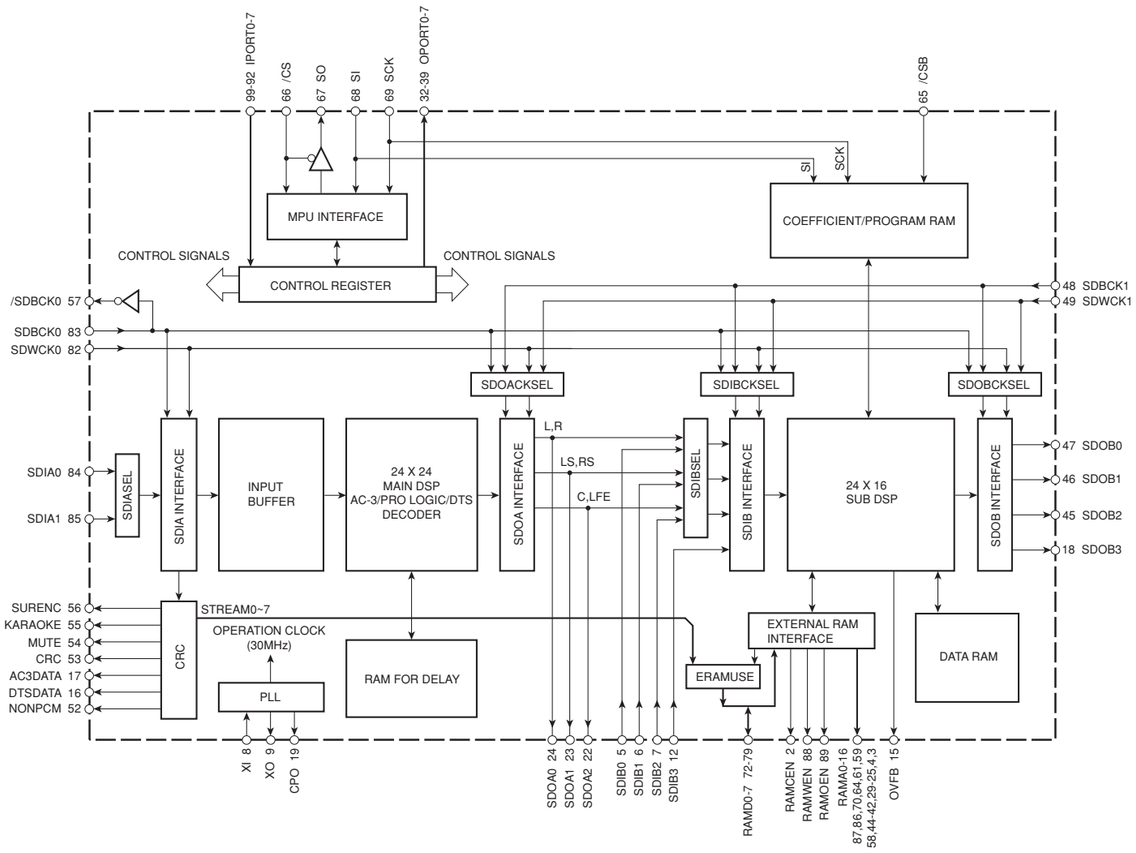

Fig. 3.21 Dolby Digital (AC3)/Prologic/DTS Decoder & Programmable DSP YSS912 (U805)

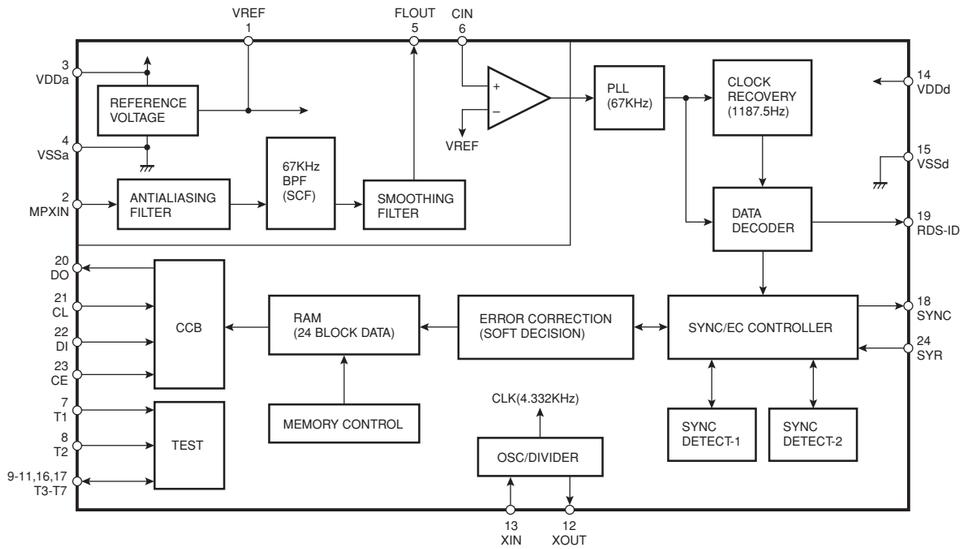

Fig. 3.22 RDS Controller LC72722PM (U133)

4. BLOCK DIAGRAMS

ANALOG PART (ANALOG P.C.B.)

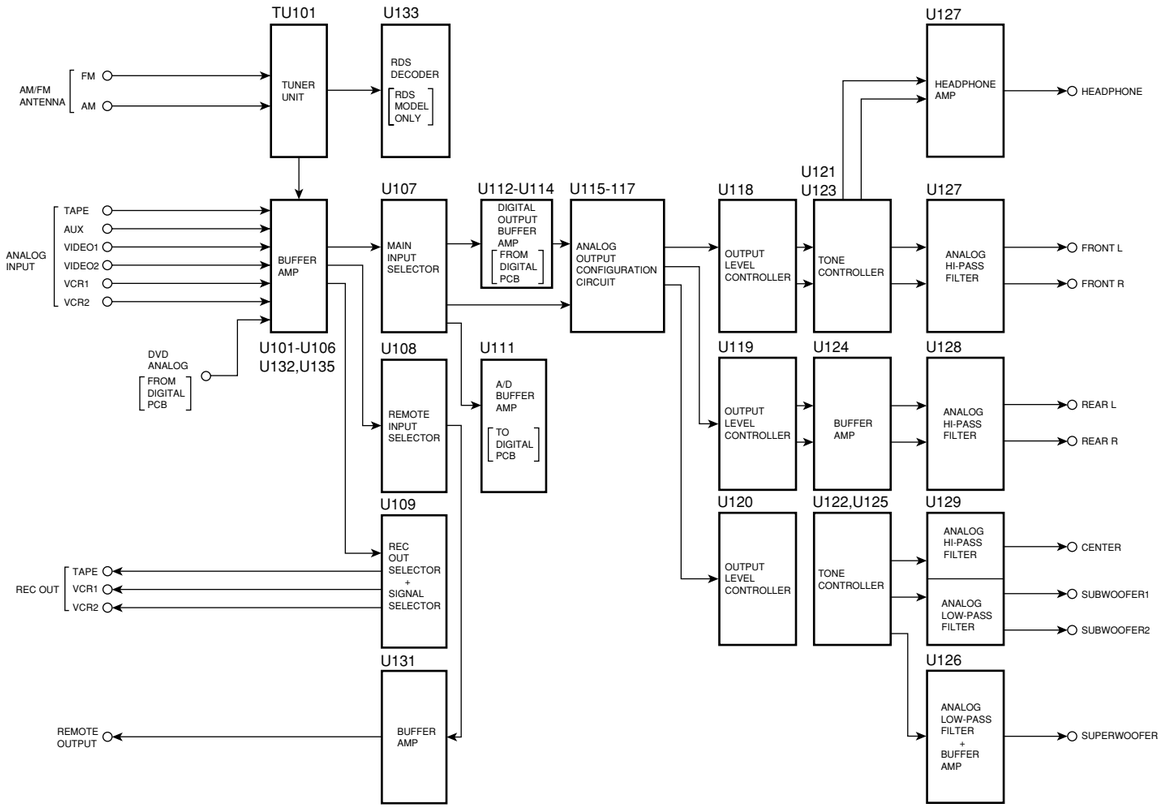

VIDEO PART (VIDEO P.C.B.)

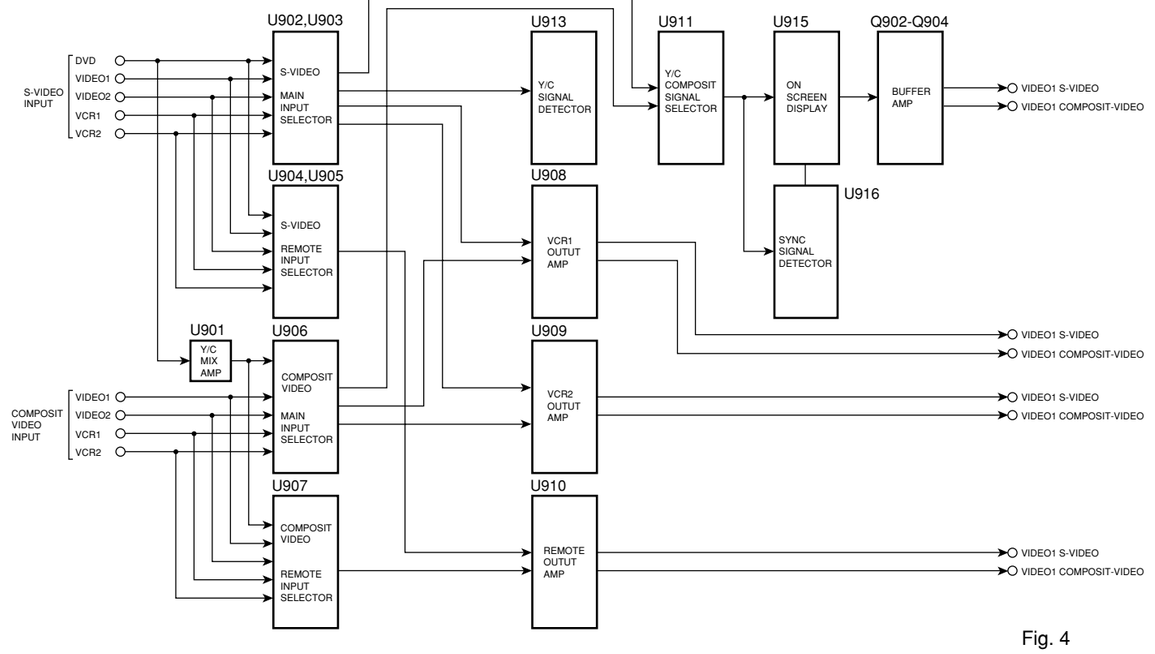

Fig. 4

DIGITAL PART (DIGITAL P.C.B.)

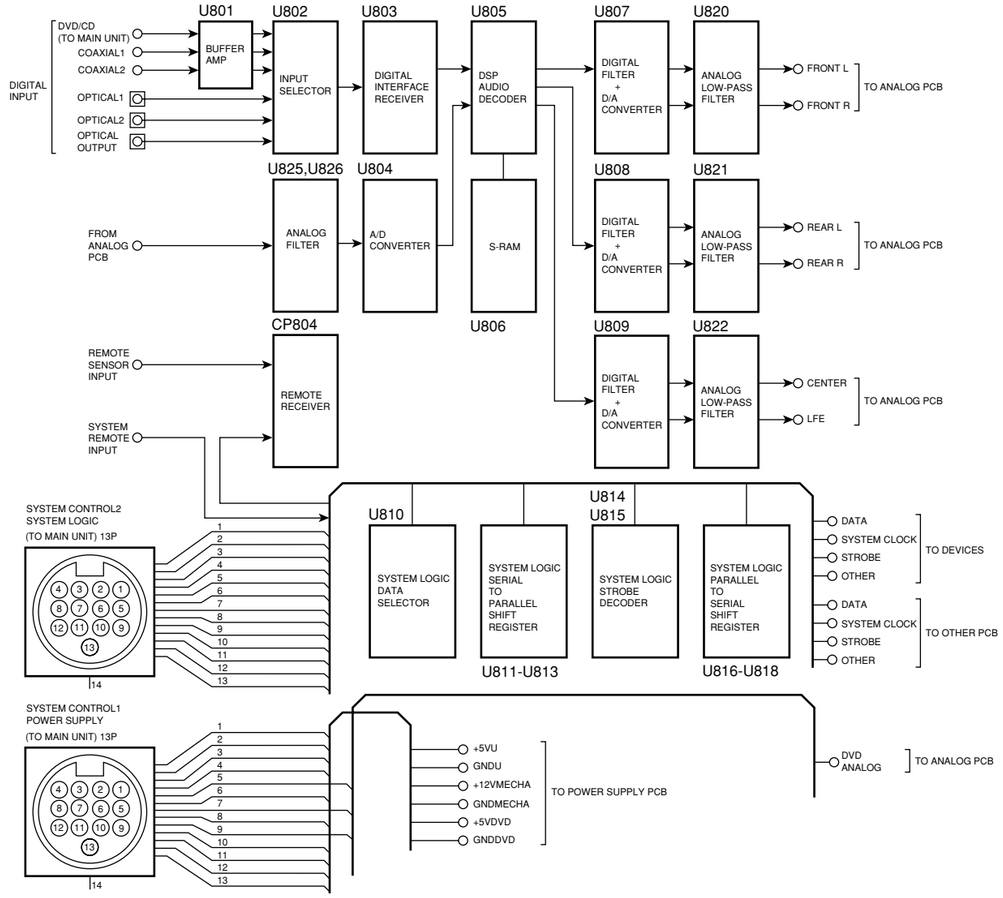

POWER SUPPLY PART (POWER SUPPLY P.C.B.)

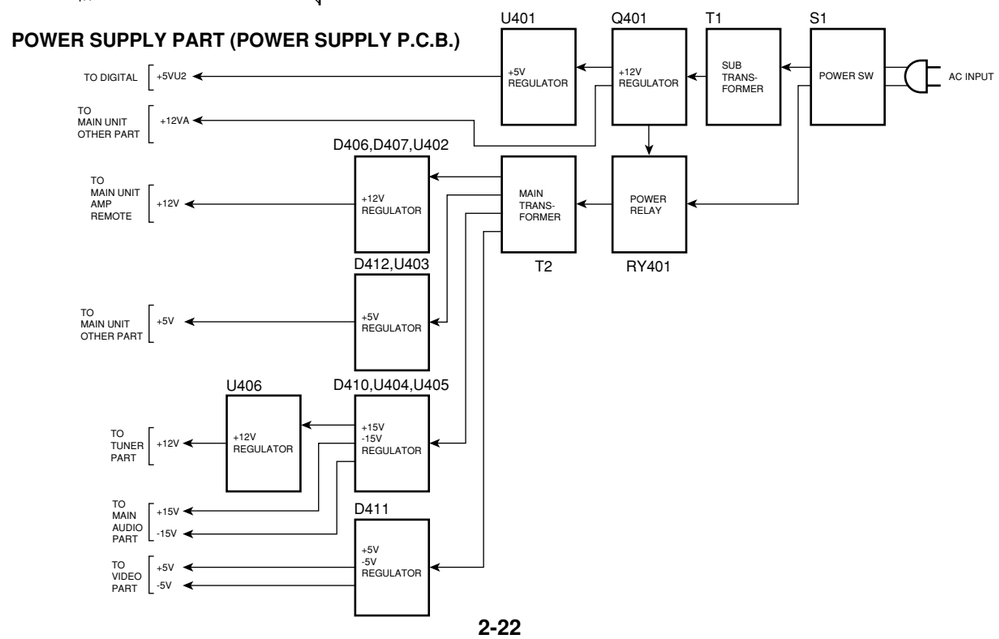

Subwoofer

Subwoofer Section
[SS-10/11/21]

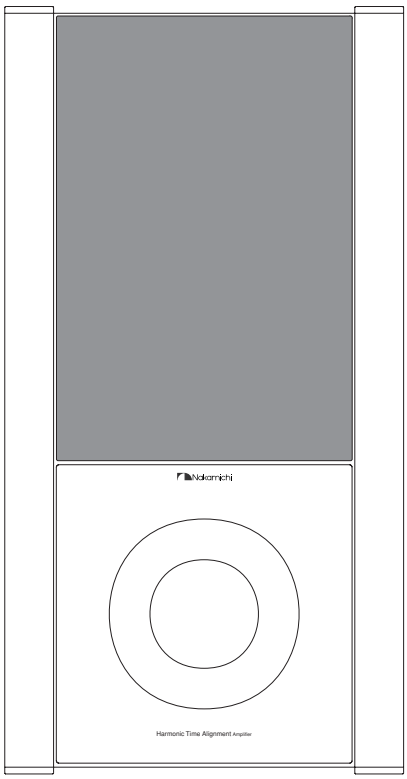

[SS-10/11]

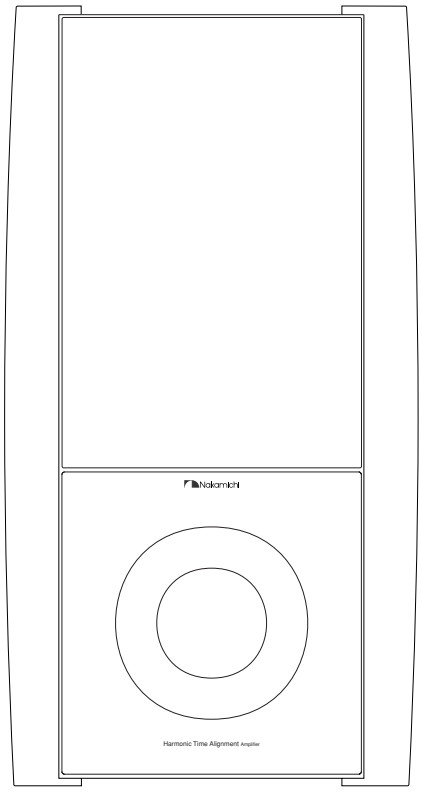

[SS-21]

CONTENTS

1. ELECTRICAL ADJUSTMENTS

1.1. Parts Location for Electrical Adjustment (Subwoofer L/R Unit)

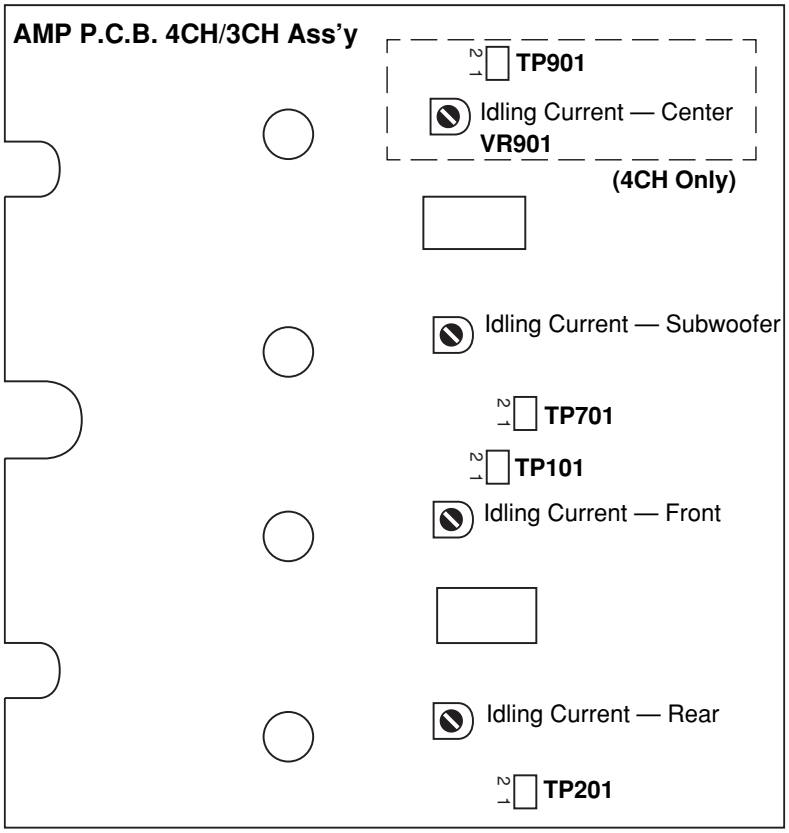

Fig. 1.1

1.2. Adjustment Procedure (Subwoofer L/R Unit)

STEP	ITEM	SIGNAL SOURCE	OUTPUT CONNECTION	ADJUST-MENT	REMARKS
1	Preparation				1. Insert shorting plugs into input jacks (Front L/R, Center, Rear L/R) on the Subwoofer L/R unit. 2. Remove the PA Chassis. 3. Turn ON the power of the Subwoofer L/R unit and allow 15 minutes before starting adjustment.
2	Idling Current Adjustment		DC Milli-voltmeter between pins of Test Point	VR101 (Front)	1. Connect the DC milli-voltmeter between pins of TP101. 2. Adjust VR101 to obtain **4.4 ± 1 mV** on the DC milli-voltmeter.
				VR201 (Rear)	1. Connect the DC milli-voltmeter between pins of TP201. 2. Adjust VR201 to obtain **4.4 ± 1 mV** on the DC milli-voltmeter.
				VR901 (Center)	**(AMP P.C.B. 4CH Ass'y Only)** 1. Connect the DC milli-voltmeter between pins of TP901. 2. Adjust VR901 to obtain **4.4 ± 1 mV** on the DC milli-voltmeter.
				VR701 (Subwoofer)	1. Connect the DC milli-voltmeter between pins of TP701. 2. Adjust VR701 to obtain **4.4 ± 1 mV** on the DC milli-voltmeter.

2. MECHANISM ASS'Y AND PARTS LIST

2.1. Subwoofer Synthesis

2.1.1. Subwoofer Synthesis [SS-10/11]

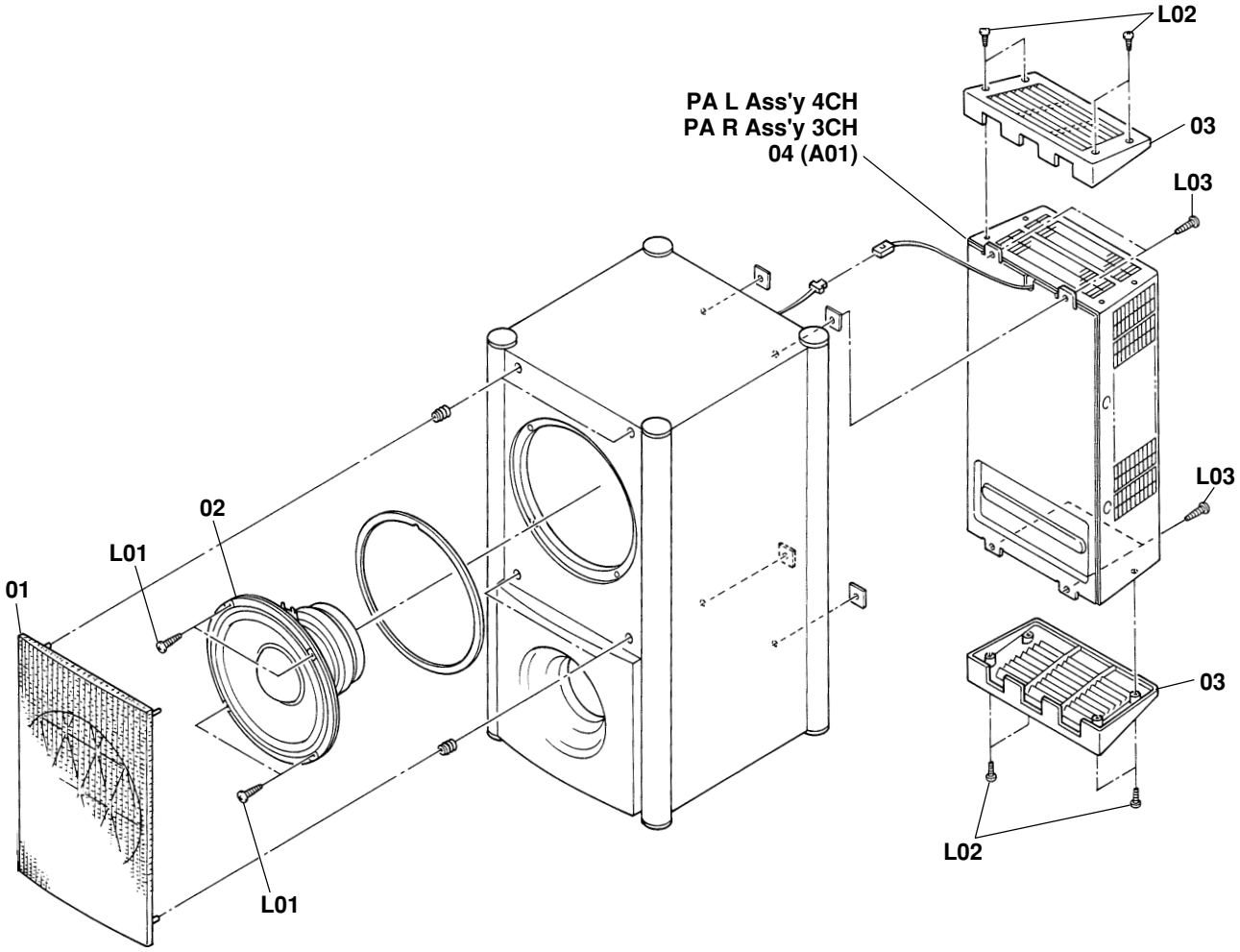

Fig. 2.1.1 SS-10/11

2.1.1. Subwoofer Synthesis (For Front L/R and Rear L/R) [SS-10/11]

Schematic Ref. No.	Part No.	Description	Q'ty
	—	**Subwoofer Synthesis (For Front L/R and Rear L/R) [SS-10/11]**	
01	CB00628A	Grille GRY Ass'y Woofer	1
02	CB00627A	Sub Woofer Speaker S800L05	1
03	0H08368E	Power Amp. Cover	2
04	—	PA L Ass'y 4CH	1
	—	PA R Ass'y 3CH	1
—	CB00634A	Cord Ass'y Woofer	1
L01	2E00103A	PT Screw 4x16	
L02	0E03281A	ST3x8 + Binding (Black)	
L03	0E04141A	4x6 + Pan Tapping	

2.1.2. Subwoofer Synthesis [SS-21]

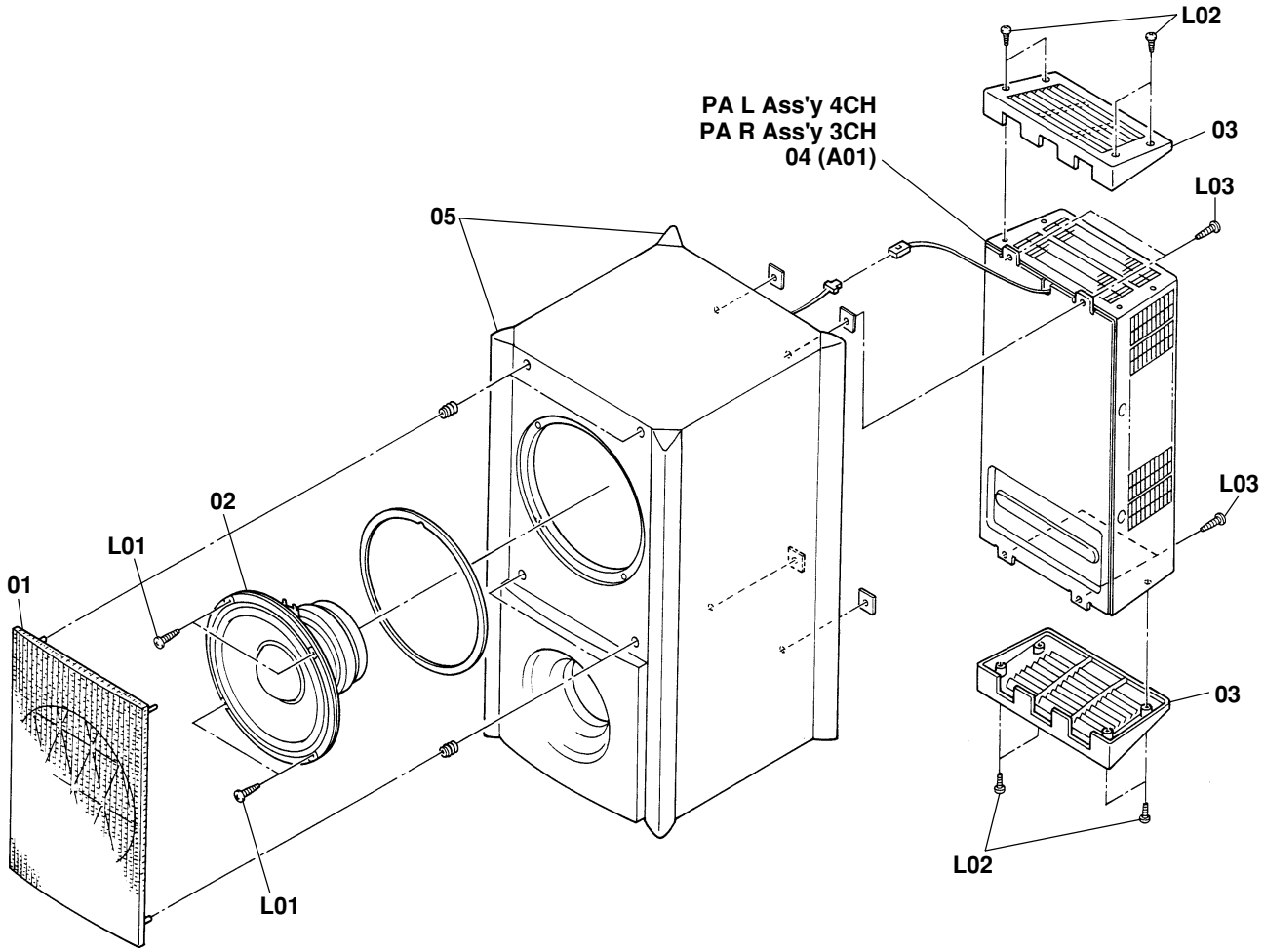

Fig. 2.1.2 SS-21

2.1.2. Subwoofer Synthesis (For Front L/R and Rear L/R) [SS-21]

Schematic Ref. No.	Part No.	Description	Q'ty
	—	**Subwoofer Synthesis (For Front L/R and Rear L/R) [SS-21]**	
01	CB00628A	Grill GRY Ass'y Woofer	1
02	CB00627A	Sub Woofer Speaker S800L05	1
03	0H08368E	Power Amp. Cover	2
04	—	PA R Ass'y 3CH	1
	—	PA L Ass'y 4CH	1
05	0H08506D	Wood Pole Woofer	4
—	CB00634A	Cord Ass'y Woofer	1
L01	2E00103A	PT Screw 4x16	
L02	0E03281A	ST3x8 + Binding (Black)	
L03	0E04141A	4x6 + Pan Tapping	

2.2. PA L Ass'y 4CH/PA R Ass'y 3CH (A01)
2.2.1. PA L Ass'y 4CH/PA R Ass'y 3CH (A01) [SS-10/11]

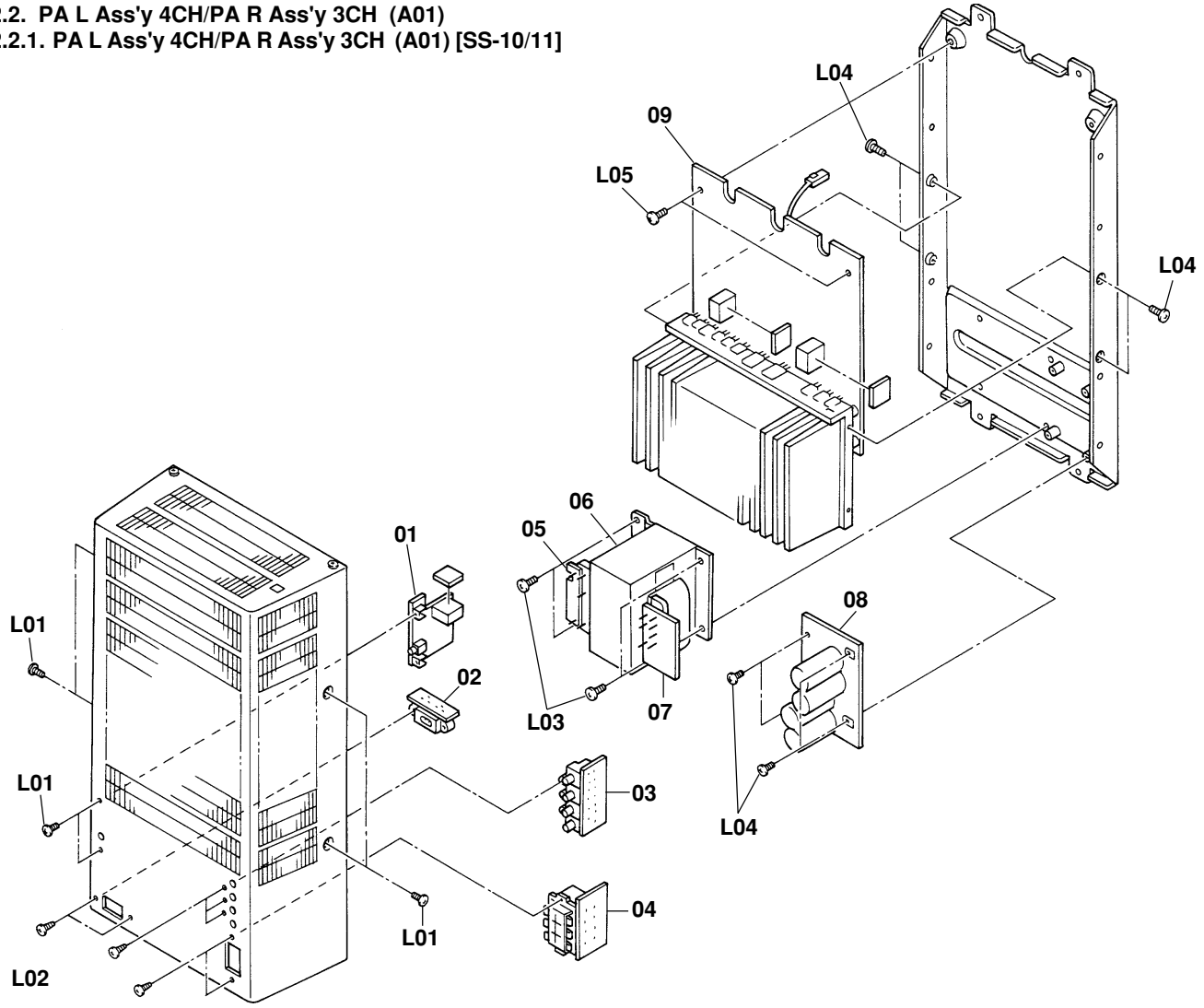

Fig. 2.2.1 SS-10/11

2.2.1.1. PA L Ass'y 4CH (A01) [SS-10/11]

Schematic Ref. No.	Part No.	Description	Q'ty
A01	**—**	**PA L Ass'y 4CH [SS-10/11]**	**1**
01	BA10206A	REM P.C.B. Ass'y (Except JPN)	1
	BA10125A	REM P.C.B. Ass'y (JPN)	1
02	BA10193A	Inlet P.C.B. Ass'y (Except USA, CAN)	1
	BA10204A	Inlet P.C.B. Ass'y (USA, CAN)	1
03	BA10127A	Input L P.C.B. Ass'y (UK, CH, HK, KR, EP, AUS, ML)	1
	BA10218A	Input L P.C.B. Ass'y (JPN, OTR, DA, TW, USA, CAN)	1
04	BA10124A	SP 6P P.C.B. Ass'y (UK, CH, HK, KR, EP, AUS, ML)	1
	BA10217A	SP 6P P.C.B.Ass'y (JPN, OTR, DA, TW, USA, CAN)	1
05	BA10128A	T.PRI P.C.B. Ass'y (Except JPN, USA, CAN)	1
	BA10205A	T.PRI P.C.B. Ass'y (JPN, USA, CAN)	1
06	0B50338A	Power Transformer (JPN)	1
	0B50339A	Power Transformer (OTR, DA)	1
	0B50340A	Power Transformer (UK, CH, HK, KR, EP, AUS, ML)	1
	0B50341A	Power Transformer (TW, USA, CAN)	1
07	BA10129A	T.SEC P.C.B. Ass'y	1
08	BA10122A	PS P.C.B. Ass'y	1
09	BA10121A	AMP P.C.B. 4CH Ass'y (UK, CH, HK, KR, EP, AUS, ML)	1
	BA10214A	AMP P.C.B. 4CH Ass'y (JPN, OTR, DA, TW, USA, CAN)	1
—	BA10130A	V.SEL P.C.B. Ass'y (OTR, DA, TW)	1
—	0B10199A	TR 2SC3421 [Q105, Q205, Q705, Q905]	1
—	0B12915A	TR 2SD2495 [Q107, Q207, Q907]	1
—	0B12914A	TR 2SB1626 [Q108, Q208, Q908]	1
—	0B12859A	TR 2SD2386 [Q707]	1
—	0B12861A	TR 2SB1557 [Q708]	1
—	0B85478A	1P Wire 1	1
—	0B85479A	1P Wire 2	1
—	0B85480A	1P Wire 3	1
—	0B85481A	1P Wire 4	1
—	0B85515A	1P Wire 5 (OTR, DA, TW)	1
—	0B85516A	1P Wire 6 (OTR, DA, TW)	1
—	0E00071A	Fiber Washer 3mm 0.5 T	1
L01	0E03281A	ST3x8 + Binding (Black)	
L02	0E03749A	PT3x8 + Binding (Black)	
L03	0E03438A	ST4x6 + Binding	
L04	0E00964A	M3x5 + Binding	
L05	0E00877A	ST3x5 + Binding	

2.2.1.2. PA R Ass'y 3CH (A01) [SS-10/11]

Schematic Ref. No.	Part No.	Description	Q'ty
A01	**—**	**PA R Ass'y 3CH [SS-10/11]**	**1**
01	BA10125A	REM P.C.B. Ass'y (JPN)	1
	BA10206A	REM P.C.B. Ass'y (Except JPN)	1
02	BA10193A	Inlet P.C.B. Ass'y (Except USA, CAN)	1
	BA10204A	Inlet P.C.B. Ass'y (USA, CAN)	1
03	BA10126A	Input R P.C.B. Ass'y (UK, CH, HK, KR, EP, AUS, ML)	1
	BA10219A	Input R P.C.B. Ass'y (JPN, OTR, DA, TW, USA, CAN)	1
04	BA10123A	SP 4P P.C.B. Ass'y (UK, CH, HK, KR, EP, AUS, ML)	1
	BA10216A	SP 4P P.C.B. Ass'y (JPN, OTR, DA, TW, USA, CAN)	1
05	BA10128A	T.PRI P.C.B. Ass'y (Except JPN, USA, CAN)	1
	BA10205A	T. PRI P.C.B. Ass'y (JPN, USA, CAN)	1
06	0B50338A	Power Transformer (JPN)	1
	0B50339A	Power Transformer (OTR, DA)	1
	0B50340A	Power Transformer (UK, CH, HK, KR, EP, AUS, ML)	1
	0B50341A	Power Transformer (TW, USA, CAN)	1
07	BA10129A	T.SEC P.C.B. Ass'y	1
08	BA10122A	PS P.C.B. Ass'y	1
09	BA10120A	AMP P.C.B. 3CH Ass'y (UK, CH, HK, KR, EP, AUS, ML)	1
	BA10215A	AMP P.C.B. 3CH Ass'y (JPN, OTR, DA, TW, USA, CAN)	1
—	BA10130A	V.SEL P.C.B. Ass'y (OTR, DA, TW)	1
—	0B10199A	TR 2SC3421 [Q105, Q205, Q705]	1
—	0B12915A	TR TR 2SD2495 [Q107, Q207]	1
—	0B12914A	TR TR 2SB1626 [Q108, Q208]	1
—	0B12859A	TR 2SD2386 [Q707]	1
—	0B12861A	TR 2SB1557 [Q708]	1
—	0B85478A	1P Wire 1	1
—	0B85479A	1P Wire 2	1
—	0B85480A	1P Wire 3	1
—	0B85481A	1P Wire 4	1
—	0B85515A	1P Wire 5 (OTR, DA, TW)	1
—	0B85516A	1P Wire 6 (OTR, DA, TW)	1
—	0E00071A	Fiber Washer 3mm 0.5 T	1
L01	0E03281A	ST3x8 + Binding (Black)	
L02	0E03749A	PT3x8 + Binding (Black)	
L03	0E03438A	ST4x6 + Binding	
L04	0E00964A	M3x5 + Binding	
L05	0E00877A	ST3x5 + Binding	

2.2.2. PA L Ass'y 4CH/PA R Ass'y 3CH (A01) [SS-21]

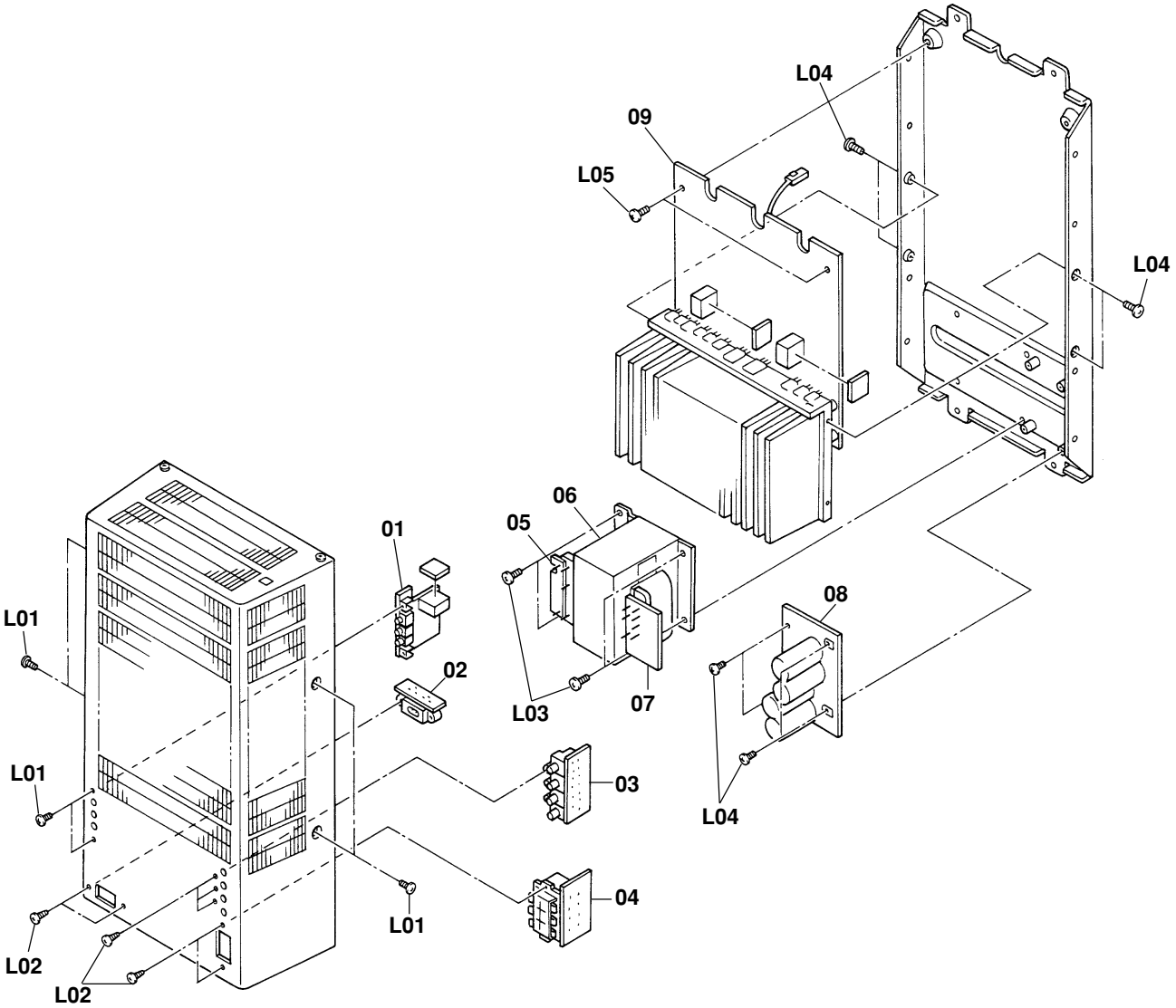

Fig. 2.2.2 SS-21

2.2.2.1. PA L Ass'y 4CH (A01) [SS-21]

Schematic Ref. No.	Part No.	Description	Q'ty
A01	**—**	**PA L Ass'y 4CH [SS-21]**	**1**
01	BA10241A	REM P.C.B. Ass'y (Except JPN)	1
	BA10242A	REM P.C.B. Ass'y (JPN)	1
02	BA10193A	Inlet P.C.B. Ass'y (Except USA, CAN)	1
	BA10204A	Inlet P.C.B. Ass'y (USA, CAN)	1
03	BA10127A	Input L P.C.B. Ass'y (UK, AUS, EP, CH HK, KR, ML)	1
	BA10218A	Input L P.C.B. Ass'y (JPN, OTR, USA, CAN, DA, TW)	1
04	BA10124A	SP 6P P.C.B. Ass'y (UK, AUS, EP, CH HK, KR, ML)	1
	BA10217A	SP 6P P.C.B. Ass'y (JPN, OTR, USA, CAN, DA, TW)	1
05	BA10128A	T.PRI P.C.B. Ass'y (Except JPN, USA, CAN)	1
	BA10205A	T. PRI P.C.B. Ass'y (JPN, USA, CAN)	1
06	0B50349A	Power Transformer (JPN)	1
	0B50350A	Power Transformer (OTR, DA, TW)	1
	0B50351A	Power Transformer (UK, AUS, EP, CH, HK, KR, ML)	1
	0B50352A	Power Transformer (USA, CAN)	1
07	BA10245A	T.SEC P.C.B. Ass'y (Except JPN, USA, CAN)	1
	BA10246A	T.SEC P.C.B. Ass'y (JPN, USA, CAN)	1
08	BA10240A	PS P.C.B. Ass'y	1
09	BA10121A	AMP P.C.B. 4CH Ass'y (UK, AUS, EP, CH HK, KR, ML)	1
	BA10214A	AMP P.C.B. 4CH Ass'y (JPN, OTR, USA, CAN, DA, TW)	1
—	BA10130A	V.SEL P.C.B. Ass'y (OTR, DA, TW)	1
—	0B10199A	2SC3421 [Q105, Q205, Q705, Q905]	1
—	0B12859A	2SD2386 [Q707]	1
—	0B12861A	2SB1557 [Q708]	1
—	0B12914A	2SB1626 [Q108, Q208, Q908]	1
—	0B12915A	2SD2495 [Q107, Q207, Q907]	1
—	0B85478A	1P Wire 1	1
—	0B85479A	1P Wire 2	1
—	0B85480A	1P Wire 3	1
—	0B85481A	1P Wire 4	1
—	0B85515A	1P Wire 5 (OTR, DA, TW)	1
—	0B85516A	1P Wire 6 (OTR, DA, TW)	1
—	0B85536A	Glass Tube D8X70	2
—	0B85537A	Glass Tube D8X150	1
L01	0E03281A	ST3x8 + Binding (Black)	
L02	0E03749A	PT3x8 + Binding (Black)	
L03	0E03438A	ST4x6 + Binding	
L04	0E00964A	M3x5 + Binding	
L05	0E00877A	ST3x5 + Binding	

2.2.2.2. PA R Ass'y 3CH (A01) [SS-21]

Schematic Ref. No.	Part No.	Description	Q'ty
A01	**—**	**PA R Ass'y 3CH [SS-21]**	**1**
01	BA10241A	REM P.C.B. Ass'y (Except JPN)	1
	BA10242A	REM P.C.B. Ass'y (JPN)	1
02	BA10193A	Inlet P.C.B. Ass'y (Except USA, CAN)	1
	BA10204A	Inlet P.C.B. Ass'y (USA, CAN)	1
03	BA10126A	Input R P.C.B. Ass'y (UK, AUS, EP, CH HK, KR, ML)	1
	BA10219A	Input R P.C.B. Ass'y (JPN, OTR, USA, CAN, DA, TW)	1
04	BA10123A	SP 4P P.C.B. Ass'y (UK, AUS, EP, CH HK, KR, ML)	1
	BA10216A	SP 4P Ass'y (JPN, OTR, USA, CAN, DA, TW)	1
05	BA10128A	T.PRI P.C.B. Ass'y (Except JPN, USA, CAN)	1
	BA10205A	T. PRI P.C.B. Ass'y (JPN, USA, CAN)	1
06	0B50349A	Power Transformer (JPN)	1
	0B50350A	Power Transformer (OTR, DA, TW)	1
	0B50351A	Power Transformer (UK, AUS, EP, CH, HK, KR, ML)	1
	0B50352A	Power Transformer (USA, CAN)	1
07	BA10245A	T.SEC P.C.B. Ass'y (Except JPN, USA, CAN)	1
	BA10246A	T.SEC P.C.B. Ass'y (JPN, USA, CAN)	1
08	BA10240A	PS P.C.B. Ass'y	1
09	BA10120A	AMP P.C.B. 3CH Ass'y (UK, AUS, EP, CH HK, KR, ML)	1
	BA10215A	AMP P.C.B 3CH Ass'y (JPN, OTR, USA, CAN, DA, TW)	1
—	0B10199A	2SC3421 [Q105, Q205, Q705]	1
—	0B12859A	2SD2386	1
—	0B12861A	2SB1557	1
—	0B12914A	TR 2SB1626 [Q108, Q208]	1
—	0B12915A	TR 2SD2495 [Q107, Q207]	1
—	0B85536A	Glass Tube D8x70	2
—	0B85537A	Glass Tube D8x150	1
—	0B85478A	1P Wire 1	1
—	0B85479A	1P Wire 2	1
—	0B85480A	1P Wire 3	1
—	0B85481A	1P Wire 4	1
—	0B85515A	1P Wire 5 (OTR, DA, TW)	1
—	0B85516A	1P Wire 6 (OTR, DA, TW)	1
L01	0E03281A	ST3x8 + Binding (Black)	
L02	0E03749A	PT3x8 + Binding (Black)	
L03	0E03438A	ST4x6 + Binding	
L04	0E00964A	M3x5 + Binding	
L05	0E00877A	ST3x5 + Binding	

3. PARTS LIST FOR MOUNTING DIAGRAMS

NOTES: 1. Abbreviations
TR – Transistor, SID – Silicon Diode, ZD – Zener Diode, Varicap – Variable Capacitance Diode
RK – Carbon Resistor, RM – Metal Film Resistor, RF – Fail Safe Type Resistor,
RC – Cement Resistor, CE – Electrolytic Capacitor, CML – Mylar Capacitor,
CC – Ceramic Capacitor, CPP – PP Capacitor, CMM – Metalized Mylar Capacitor,
CSP – Polystyrene Capacitor, C – Mica Capacitor, CT – Tantalum Capacitor
2. Description of capacitor: 10 16V = 10µ 16V
3. Parts marked with * show chip parts.

3.1. AMP P.C.B. 4CH Ass'y

Schematic Ref. No.	Part No.	Description
	BA10121A	**AMP P.C.B. 4CH Ass'y (UK, AUS, EP, CH, HK, KR, ML)**
	BA10214A	**AMP P.C.B. 4CH Ass'y (JPN, OTR, USA, CAN, DA, TW) [SS-10/11/21]**
IP401	0B11638A	IC Protector ICP-N20 0.8A
U501	0B11246A	IC UPC1237H
Q101,102	0B06142A	TR 2SC2240
Q103	0B06142A	TR 2SC2240
Q104	0B10221A	TR 2SA1145 Y
Q106	0B10222A	TR 2SC2705 Y
Q109	0B06142A	TR 2SC2240
Q110	0B10050A	TR 2SA970BL
Q201,202	0B06142A	TR 2SC2240
Q203	0B06142A	TR 2SC2240
Q204	0B10221A	TR 2SA1145 Y
Q206	0B10222A	TR 2SC2705 Y
Q209	0B06142A	TR 2SC2240
Q210	0B10050A	TR 2SA970BL
Q501	0B06013A	TR 2SA733
Q701,702	0B06142A	TR 2SC2240
Q703	0B06142A	TR 2SC2240
Q704	0B10221A	TR 2SA1145 Y
Q706	0B10222A	TR 2SC2705 Y
Q709	0B06142A	TR 2SC2240
Q710	0B10050A	TR 2SA970BL
Q901,902	0B06142A	TR 2SC2240
Q903	0B06142A	TR 2SC2240
Q904	0B10221A	TR 2SA1145 Y
Q906	0B10222A	TR 2SC2705 Y
Q909	0B06142A	TR 2SC2240
Q910	0B10050A	TR 2SA970BL
ZD501	0B12150A	ZD RD5.6V JS B2
D101,102	0B12249A	SID 1SS133
D103	0B12249A	SID 1SS133
D201,202	0B12249A	SID 1SS133
D203	0B12249A	SID 1SS133
D407	0B12249A	SID 1SS133
D501,502	0B12249A	SID 1SS133
D503,504	0B12249A	SID 1SS133
D505	0B12249A	SID 1SS133
D601	0B12249A	SID 1SS133
D701,702	0B12249A	SID 1SS133
D703	0B12249A	SID 1SS133
D901,902	0B12249A	SID 1SS133
D903	0B12249A	SID 1SS133
L101	0B50336A	Coil 0.8uH
L201	0B50336A	Coil 0.8uH
L701	0B50336A	Coil 0.8uH
L901	0B50336A	Coil 0.8uH
VR101	0B32188A	Semi VR 200 Top
VR201	0B32188A	Semi VR 200 Top
VR701	0B32188A	Semi VR 200 Top
VR901	0B32188A	Semi VR 200 Top
R102	0B09709A	RK 22K 1/6W J
R103	0B25661A	RM 2.2K 1/4W F
R104,105	0B25212A	RM 1.5K 1/4W F
R106,107	0B09651A	RK 82 1/6W J
R108	0B09664A	RK 300 1/6W J
R109	0B25649A	RM 390 1/4W F
R110	0B25669A	RM 4.7K 1/4W F
R111	0B09717A	RK 47K 1/6W J
R112	0B09684A	RK 2K 1/6W J
R113	0B25653A	RM 560 1/4W F
R114	0B09659A	RK 180 1/6W J
R115	0B09655A	RK 120 1/6W J
R116,117	0B09709A	RK 22K 1/6W J
R118,119	0B09177R	RF 47 1/4W
R120,121	0B24028A	RF 0.22 1W
R122	0B09701A	RK 10K 1/6W J
R123	0B09709A	RK 22K 1/6W J
R124	0B09737A	RK 330K 1/6W J
R125	0B09707A	RK 18K 1/6W J
R126	0B09725A	RK 100K 1/6W J
R127	0B09701A	RK 10K 1/6W J
R128	0B24388A	RF 5.6 1W
R129	0B24122A	RF 10 2W
R130	0B09731A	RK 180K 1/6W J
R151	0B22666A	RM 10 1/4W F
R202	0B09709A	RK 22K 1/6W J
R203	0B25661A	RM 2.2K 1/4W F
R204,205	0B25212A	RM 1.5K 1/4W F
R206,207	0B09651A	RK 82 1/6W J
R208	0B09664A	RK 300 1/6W J
R209	0B25649A	RM 390 1/4W F
R210	0B25669A	RM 4.7K 1/4W F
R211	0B09717A	RK 47K 1/6W J
R212	0B09684A	RK 2K 1/6W J
R213	0B25653A	RM 560 1/4W F
R214	0B09659A	RK 180 1/6W J
R215	0B09655A	RK 120 1/6W J
R216,217	0B09709A	RK 22K 1/6W J
R218,219	0B09177R	RF 47 1/4W
R220,221	0B24028A	RF 0.22 1W
R222	0B09701A	RK 10K 1/6W J
R223	0B09709A	RK 22K 1/6W J
R224	0B09737A	RK 330K 1/6W J
R225	0B09707A	RK 18K 1/6W J
R226	0B09725A	RK 100K 1/6W J
R227	0B09701A	RK 10K 1/6W J
R228	0B24388A	RF 5.6 1W
R229	0B24122A	RF 10 2W
R230	0B09731A	RK 180K 1/6W J
R251	0B22666A	RM 10 1/4W F
R401	0B09705A	RK 15K 1/6W J
R501	0B09709A	RK 22K 1/6W J
R502	0B09691A	RK 3.9K 1/6W J
R503	0B09717A	RK 47K 1/6W J
R504	0B09725A	RK 100K 1/6W J
R505	0B09719A	RK 56K 1/6W J
R506	0B09701A	RK 10K 1/6W J
R507	0B24497R	RF 100 2W
R601	0B09629A	RK 10 1/6W J
R702	0B09709A	RK 22K 1/6W J
R703	0B25661A	RM 2.2K 1/4W F
R704,705	0B25212A	RM 1.5K 1/4W F
R706,707	0B09651A	RK 82 1/6W J
R708	0B09664A	RK 300 1/6W J
R709	0B25649A	RM 390 1/4W F
R710	0B25669A	RM 4.7K 1/4W F
R711	0B09717A	RK 47K 1/6W J
R712	0B09684A	RK 2K 1/6W J
R713	0B25653A	RM 560 1/4W F
R714	0B09659A	RK 180 1/6W J
R715	0B09655A	RK 120 1/6W J
R716,717	0B09709A	RK 22K 1/6W J
R718,719	0B09177R	RF 47 1/4W
R720,721	0B09995A	RF 0.22 2W
R722	0B09701A	RK 10K 1/6W J
R723	0B09703A	RK 12K 1/6W J
R724	0B09735A	RK 270K 1/6W J
R725	0B09707A	RK 18K 1/6W J
R726	0B09725A	RK 100K 1/6W J
R727	0B09701A	RK 10K 1/6W J
R728	0B24388A	RF 5.6 1W
R729	0B24122A	RF 10 2W
R730	0B09731A	RK 180K 1/6W J
R751	0B22666A	RM 10 1/4W F
R902	0B09709A	RK 22K 1/6W J
R903	0B25661A	RM 2.2K 1/4W F
R904,905	0B25212A	RM 1.5K 1/4W F
R906,907	0B09651A	RK 82 1/6W J
R908	0B09664A	RK 300 1/6W J
R909	0B25649A	RM 390 1/4W F
R910	0B25669A	RM 4.7K 1/4W F
R911	0B09717A	RK 47K 1/6W J
R912	0B09684A	RK 2K 1/6W J
R913	0B25653A	RM 560 1/4W F
R914	0B09659A	RK 180 1/6W J
R915	0B09655A	RK 120 1/6W J
R916,917	0B09709A	RK 22K 1/6W J
R918,919	0B09177R	RF 47 1/4W
R920,921	0B24028A	RF 0.22 1W
R922	0B09701A	RK 10K 1/6W J
R923	0B09709A	RK 22K 1/6W J
R924	0B09737A	RK 330K 1/6W J
R925	0B09707A	RK 18K 1/6W J
R926	0B09725A	RK 100K 1/6W J
R927	0B09701A	RK 10K 1/6W J
R928	0B24388A	RF 5.6 1W
R929	0B24122A	RF 10 2W
R930	0B09731A	RK 180K 1/6W J
R951	0B22666A	RM 10 1/4W F
C102	0B40708A	CE 1 50V (LN)
C103	0B41219A	CPP 560P 100V J
C104	0B42618A	CPP 100P 100V J
C105	0B42223A	CML 220P 50V K (UK, AUS, EP, CH, HK, KR, ML)
C106	0B40686A	CE 470 16V (LN)
C107	0B09404A	CPP 1000P 100V J
C108,109	0B41870A	CC 12P 50V J
C110	0B40902A	CE 100 35V
C111,112	0B41298A	CML 0.1 50V J
C113	0B42225A	CM 330P 50V K
C114	0B40902A	CE 100 35V
C115,116	0B41298A	CML 0.1 50V J
C117	0B09405A	CPP 0.022 100V J
C118	0B42619A	CPP 0.1 100V J
C202	0B40708A	CE 1 50V (LN)
C203	0B41219A	CPP 560P 100V J
C204	0B42618A	CPP 100P 100V J
C205	0B42223A	CML 220P 50V K

Schematic Ref. No.	Part No.	Description
		(UK, AUS, EP, CH, HK, KR, ML)
C206	0B40686A	CE 470 16V (LN)
C207	0B09404A	CPP 1000P 100V J
C208,209	0B41870A	CC 12P 50V J
C210	0B40902A	CE 100 35V
C211,212	0B41298A	CML 0.1 50V J
C213	0B42225A	CM 330P 50V K
C214	0B40902A	CE 100 35V
C215,216	0B41298A	CML 0.1 50V J
C217	0B09405A	CPP 0.022 100V J
C218	0B42619A	CPP 0.1 100V J
C401	0B41826A	CC 4700P 250V
C501	0B40915A	CE 1 50V
C502	0B41298A	CML 0.1 50V J
C503	0B40902A	CE 100 35V
C504	0B40918A	CE 4.7 50V
C505	0B40119A	CE 47 50V
C506	0B40902A	CE 100 35V
C702	0B42196A	CE 10 16V (LN)
C703	0B41219A	CPP 560P 100V J
C704	0B42618A	CPP 100P 100V J
C705	0B42223A	CML 220P 50V K
		(UK, AUS, EP, CH, HK, KR, ML)
C706	0B40686A	CE 470 16V (LN)
C707	0B09404A	CPP 1000P 100V J
C708,709	0B41870A	CC 12P 50V J
C710	0B40902A	CE 100 35V
C711,712	0B41298A	CML 0.1 50V J
C713	0B42225A	CM 330P 50V K
C714	0B40902A	CE 100 35V
C715,716	0B41298A	CML 0.1 50V J
C717	0B09405A	CPP 0.022 100V J
C718	0B42619A	CPP 0.1 100V J
C719,720	0B41278A	CML 2200P 50V J
		(UK, AUS, EP, CH, HK, KR, ML)
C902	0B40708A	CE 1 50V (LN)
C903	0B41219A	CPP 560P 100V J
C904	0B42618A	CPP 100P 100V J
C905	0B42223A	CML 220P 50V K
		(UK, AUS, EP, CH, HK, KR, ML)
C906	0B40686A	CE 470 16V (LN)
C907	0B09404A	CPP 1000P 100V J
C908,909	0B41870A	CC 12P 50V J
C910	0B40902A	CE 100 35V
C911,912	0B41298A	CML 0.1 50V J
C913	0B42225A	CM 330P 50V K
C914	0B40902A	CE 100 35V
C915,916	0B41298A	CML 0.1 50V J
C917	0B09405A	CPP 0.022 100V J
C918	0B42619A	CPP 0.1 100V J
CN101	0B85482A	2P Connector Ass'y Yellow C
CN201	0B85483A	2P Connector Ass'y RED D
CN701	0B85387A	2P Connector Ass'y A
CN901	0B85484A	2P Connector Ass'y White E
CP101	0B81634A	2P T-Post
CP201	0B81634A	2P T-Post
CP701	0B81634A	2P T-Post
CP901	0B81634A	2P T-Post
F401	0B90830A	Fuse RP 4A 125V
RL501,502	0B90904A	Relay OSA-SS-224DM
RL601	0B90903A	Relay SDT-S112LMR
TF101	0B90322A	Thermal Fuse 126
TF201	0B90322A	Thermal Fuse 126
TF501	0B90322A	Thermal Fuse 126
TF701	0B90322A	Thermal Fuse 126
TF901	0B90322A	Thermal Fuse 126
TH501	2B10071A	Thermistor 50KDD130
	0B85388A	2P Connector Ass'y B (1)

Schematic Ref. No.	Part No.	Description
	0B85391A	6P Connector Ass'y A (1)
	0B85392A	6P Connector Ass'y B (2)
	0B85393A	7P Connector Ass'y A (1)
	0B85394A	1P Wire Ass'y A (1)
	0B85395A	1P Wire Ass'y B (1)
	0B85396A	1P Wire Ass'y C (1)
	0B85397A	1P Wire Ass'y D (1)
	0B85399B	6P Connector Ass'y C (1)

3.2. AMP P.C.B. 3CH Ass'y

Schematic Ref. No.	Part No.	Description
	BA10120A	**AMP P.C.B. 3CH Ass'y (UK, AUS, EP, CH, HK, KR, ML)**
	BA10215A	**AMP P.C.B. 3CH Ass'y (JPN, OTR, USA, CAN, DA, TW) [SS-10/11/21]**
IP401	0B11638A	IC Protector ICP-N20 0.8A
U501	0B11246A	IC UPC1237H
Q101,102	0B06142A	TR 2SC2240
Q103	0B06142A	TR 2SC2240
Q104	0B10221A	TR 2SA1145 Y
Q106	0B10222A	TR 2SC2705 Y
Q109	0B06142A	TR 2SC2240
Q110	0B10050A	TR 2SA970BL
Q201,202	0B06142A	TR 2SC2240
Q203	0B06142A	TR 2SC2240
Q204	0B10221A	TR 2SA1145 Y
Q206	0B10222A	TR 2SC2705 Y
Q209	0B06142A	TR 2SC2240
Q210	0B10050A	TR 2SA970BL
Q501	0B06013A	TR 2SA733
Q701,702	0B06142A	TR 2SC2240
Q703	0B06142A	TR 2SC2240
Q704	0B10221A	TR 2SA1145 Y
Q706	0B10222A	TR 2SC2705 Y
Q709	0B06142A	TR 2SC2240
Q710	0B10050A	TR 2SA970BL
ZD501	0B12150A	ZD RD5.6V JS B2
D101,102	0B12249A	SID 1SS133
D103	0B12249A	SID 1SS133
D201,202	0B12249A	SID 1SS133
D203	0B12249A	SID 1SS133
D407	0B12249A	SID 1SS133
D501,502	0B12249A	SID 1SS133
D503,504	0B12249A	SID 1SS133
D505	0B12249A	SID 1SS133
D601	0B12249A	SID 1SS133
D701,702	0B12249A	SID 1SS133
D703	0B12249A	SID 1SS133
L101	0B50336A	Coil 0.8uH
L201	0B50336A	Coil 0.8uH
L701	0B50336A	Coil 0.8uH
VR101	0B32188A	Semi VR 200 Top
VR201	0B32188A	Semi VR 200 Top
VR701	0B32188A	Semi VR 200 Top
R102	0B09709A	RK 22K 1/6W J
R103	0B25661A	RM 2.2K 1/4W F
R104,105	0B25212A	RM 1.5K 1/4W F
R106,107	0B09651A	RK 82 1/6W J
R108	0B09664A	RK 300 1/6W J
R109	0B25649A	RM 390 1/4W F
R110	0B25669A	RM 4.7K 1/4W F
R111	0B09717A	RK 47K 1/6W J
R112	0B09684A	RK 2K 1/6W J
R113	0B25653A	RM 560 1/4W F
R114	0B09659A	RK 180 1/6W J
R115	0B09655A	RK 120 1/6W J
R116,117	0B09709A	RK 22K 1/6W J

Schematic Ref. No.	Part No.	Description
R118,119	0B09177R	RF 47 1/4W
R120,121	0B24028A	RF 0.22 1W
R122	0B09701A	RK 10K 1/6W J
R123	0B09709A	RK 22K 1/6W J
R124	0B09737A	RK 330K 1/6W J
R125	0B09707A	RK 18K 1/6W J
R126	0B09725A	RK 100K 1/6W J
R127	0B09701A	RK 10K 1/6W J
R128	0B24388A	RF 5.6 1W
R129	0B24122A	RF 10 2W
R130	0B09731A	RK 180K 1/6W J
R151	0B22666A	RM 10 1/4W F
R202	0B09709A	RK 22K 1/6W J
R203	0B25661A	RM 2.2K 1/4W F
R204,205	0B25212A	RM 1.5K 1/4W F
R206,207	0B09651A	RK 82 1/6W J
R208	0B09664A	RK 300 1/6W J
R209	0B25649A	RM 390 1/4W F
R210	0B25669A	RM 4.7K 1/4W F
R211	0B09717A	RK 47K 1/6W J
R212	0B09684A	RK 2K 1/6W J
R213	0B25653A	RM 560 1/4W F
R214	0B09659A	RK 180 1/6W J
R215	0B09655A	RK 120 1/6W J
R216,217	0B09709A	RK 22K 1/6W J
R218,219	0B09177R	RF 47 1/4W
R220,221	0B24028A	RF 0.22 1W
R222	0B09701A	RK 10K 1/6W J
R223	0B09709A	RK 22K 1/6W J
R224	0B09737A	RK 330K 1/6W J
R225	0B09707A	RK 18K 1/6W J
R226	0B09725A	RK 100K 1/6W J
R227	0B09701A	RK 10K 1/6W J
R228	0B24388A	RF 5.6 1W
R229	0B24122A	RF 10 2W
R230	0B09731A	RK 180K 1/6W J
R251	0B22666A	RM 10 1/4W F
R401	0B09705A	RK 15K 1/6W J
R501	0B09709A	RK 22K 1/6W J
R502	0B09691A	RK 3.9K 1/6W J
R503	0B09717A	RK 47K 1/6W J
R504	0B09725A	RK 100K 1/6W J
R505	0B09719A	RK 56K 1/6W J
R506	0B09701A	RK 10K 1/6W J
R507	0B24497R	RF 100 2W
R601	0B09629A	RK 10 1/6W J
R702	0B09709A	RK 22K 1/6W J
R703	0B25661A	RM 2.2K 1/4W F
R704,705	0B25212A	RM 1.5K 1/4W F
R706,707	0B09651A	RK 82 1/6W J
R708	0B09664A	RK 300 1/6W J
R709	0B25649A	RM 390 1/4W F
R710	0B25669A	RM 4.7K 1/4W F
R711	0B09717A	RK 47K 1/6W J
R712	0B09684A	RK 2K 1/6W J
R713	0B25653A	RM 560 1/4W F
R714	0B09659A	RK 180 1/6W J
R715	0B09655A	RK 120 1/6W J
R716,717	0B09709A	RK 22K 1/6W J
R718,719	0B09177R	RF 47 1/4W
R720,721	0B09995A	RF 0.22 2W
R722	0B09701A	RK 10K 1/6W J
R723	0B09703A	RK 12K 1/6W J
R724	0B09735A	RK 270K 1/6W J
R725	0B09707A	RK 18K 1/6W J
R726	0B09725A	RK 100K 1/6W J
R727	0B09701A	RK 10K 1/6W J
R728	0B24388A	RF 5.6 1W
R729	0B24122A	RF 10 2W
R730	0B09731A	RK 180K 1/6W J
R751	0B22666A	RM 10 1/4W F
C102	0B40708A	CE 1 50V (LN)
C103	0B41219A	CPP 560P 100V J
C104	0B42618A	CPP 100P 100V J

Schematic Ref. No.	Part No.	Description
C105	0B42223A	CML 220P 50V K (UK, AUS, EP, CH, HK, KR, ML)
C106	0B40686A	CE 470 16V (LN)
C107	0B09404A	CPP 1000P 100V J
C108,109	0B41870A	CC 12P 50V J
C110	0B40902A	CE 100 35V
C111,112	0B41298A	CML 0.1 50V J
C113	0B42225A	CM 330P 50V K
C114	0B40902A	CE 100 35V
C115,116	0B41298A	CML 0.1 50V J
C117	0B09405A	CPP 0.022 100V J
C118	0B42619A	CPP 0.1 100V J
C202	0B40708A	CE 1 50V (LN)
C203	0B41219A	CPP 560P 100V J
C204	0B42618A	CPP 100P 100V J
C205	0B42223A	CML 220P 50V K (UK, AUS, EP, CH, HK, KR, ML)
C206	0B40686A	CE 470 16V (LN)
C207	0B09404A	CPP 1000P 100V J
C208,209	0B41870A	CC 12P 50V J
C210	0B40902A	CE 100 35V
C211,212	0B41298A	CML 0.1 50V J
C213	0B42225A	CM 330P 50V K
C214	0B40902A	CE 100 35V
C215,216	0B41298A	CML 0.1 50V J
C217	0B09405A	CPP 0.022 100V J
C218	0B42619A	CPP 0.1 100V J
C401	0B41826A	CC 4700P 250V
C501	0B40915A	CE 1 50V
C502	0B41298A	CML 0.1 50V J
C503	0B40902A	CE 100 35V
C504	0B40918A	CE 4.7 50V
C505	0B40119A	CE 47 50V
C506	0B40902A	CE 100 35V
C702	0B42196A	CE 10 16V (LN)
C703	0B41219A	CPP 560P 100V J
C704	0B42618A	CPP 100P 100V J
C705	0B42223A	CML 220P 50V K (UK, AUS, EP, CH, HK, KR, ML)
C706	0B40686A	CE 470 16V (LN)
C707	0B09404A	CPP 1000P 100V J
C708,709	0B41870A	CC 12P 50V J
C710	0B40902A	CE 100 35V
C711,712	0B41298A	CML 0.1 50V J
C713	0B42225A	CM 330P 50V K
C714	0B40902A	CE 100 35V
C715,716	0B41298A	CML 0.1 50V J
C717	0B09405A	CPP 0.022 100V J
C718	0B42619A	CPP 0.1 100V J
C719,720	0B41278A	CML 2200P 50V J (UK, AUS, EP, CH, HK, KR, ML)
CN101	0B85482A	2P Connector Ass'y Yellow C
CN201	0B85483A	2P Connector Ass'y RED D
CN701	0B85387A	2P Connector Ass'y A
CP101	0B81634A	2P T-Post
CP201	0B81634A	2P T-Post
CP701	0B81634A	2P T-Post
F401	0B90830A	Fuse RP 4A 125V
RL501,502	0B90904A	Relay OSA-SS-224DM
RL601	0B90903A	Relay SDT-S112LMR
TF101	0B90322A	Thermal Fuse 126
TF201	0B90322A	Thermal Fuse 126
TF501	0B90322A	Thermal Fuse 126
TF701	0B90322A	Thermal Fuse 126
TH501	2B10071A	Thermistor 50KDD130
	0B85388A	2P Connector Ass'y B (1)
	0B85391A	6P Connector Ass'y A (1)
	0B85392A	6P Connector Ass'y B (2)
	0B85393A	7P Connector Ass'y A (1)

Schematic Ref. No.	Part No.	Description
	0B85394A	1P Wire Ass'y A (1)
	0B85396A	1P Wire Ass'y C (1)
	0B85397A	1P Wire Ass'y D (1)
	0B85398C	4P Connector Ass'y C (1)

3.3. SP 4P P.C.B. Ass'y

Schematic Ref. No.	Part No.	Description
	BA10123A	**SP 4P P.C.B. Ass'y (UK, AUS, EP, CH, HK, KR, ML)**
	BA10216A	**SP 4P P.C.B. Ass'y (JPN, OTR, USA, CAN, DA, TW) [SS-10/11/21]**
C119R	0B41278A	CML 2200P 50V J (UK, AUS, EP, CH, HK, KR, ML)
C120R	0B41278A	CML 2200P 50V J (UK, AUS, EP, CH, HK, KR, ML)
C219R	0B41278A	CML 2200P 50V J (UK, AUS, EP, CH, HK, KR, ML)
C220R	0B41278A	CML 2200P 50V J (UK, AUS, EP, CH, HK, KR, ML)
CN601R	0B81322A	4P T-Post
CN611	0B85354A	4P Speaker Terminal

3.4. Input R P.C.B. Ass'y

Schematic Ref. No.	Part No.	Description
	BA10126A	**Input R P.C.B. Ass'y (UK, AUS, EP, CH, HK, KR, ML)**
	BA10219A	**Input R P.C.B. Ass'y (JPN, OTR, USA, CAN, DA, TW) [SS-10/11/21]**
R101	0B09677A	RK 1K 1/6W J
R201	0B09677A	RK 1K 1/6W J
R701	0B09677A	RK 1K 1/6W J
C101	0B41288A	CML 0.015 50V J (UK, AUS, EP, CH, HK, KR, ML)
C201	0B41288A	CML 0.015 50V J (UK, AUS, EP, CH, HK, KR, ML)
C701	0B41288A	CML 0.015 50V J (UK, AUS, EP, CH, HK, KR, ML)
PJ311	0B85352A	3P Pin Jack

3.5. PS P.C.B. Ass'y

3.5.1. PS P.C.B. Ass'y [SS-21 Only]

Schematic Ref. No.	Part No.	Description
	BA10240A	**PS P.C.B. Ass'y [SS-21Only]**
D401,402	0B10520A	SID GBU6D
D403,404	0B12586A	SID 1N4002
D405,406	0B12586A	SID 1N4002
C402,403	0B42852A	CE 6800 35V
C404,405	0B42852A	CE 6800 35V
C406	0B40893R	CE 2200 25V
C407,408	0B41298A	CML 0.1 50V J
C409,410	0B41298A	CML 0.1 50V J
C451,452	0B47300A	CC 0.01 50V M
C453,454	0B47300A	CC 0.01 50V M
CN402,403	0B81638A	6P T-Post
CN404	0B81636A	4P T-Post
CN405	0B81639A	7P T-Post
CN406	0B81638A	6P T-Post
CP407	0B81636A	4P T-Post
G401,402	0B80673A	Earth Terminal

3.5.2. PS P.C.B. Ass'y [SS-10/11 Only]

Schematic Ref. No.	Part No.	Description
	BA10122A	**PS P.C.B. Ass'y [SS-10/11]**
D401,402	0B10520A	SID GBU6D
C402,403	0B42852A	CE 6800 35V
C404,405	0B42852A	CE 6800 35V
C407,408	0B41298A	CML 0.1 50V J
C409,410	0B41298A	CML 0.1 50V J
CN402,403	0B81638A	6P T-Post
CN405	0B81639A	7P T-Post
CN406	0B81638A	6P T-Post
G401,402	0B80673A	Earth Terminal

3.6. SP 6P P.C.B. Ass'y

Schematic Ref. No.	Part No.	Description
	BA10124A	**SP 6P P.C.B. Ass'y (UK, AUS, EP, CH, HK, KR, ML)**
	BA10217A	**SP 6P P.C.B. Ass'y (JPN, OTR, USA, CAN, DA, TW) [SS-10/11/21]**
C119L	0B41278A	CML 2200P 50V J (UK, AUS, EP, CH, HK, KR, ML)
C120L	0B41278A	CML 2200P 50V J (UK, AUS, EP, CH, HK, KR, ML)
C219L	0B41278A	CML 2200P 50V J (UK, AUS, EP, CH, HK, KR, ML)
C220L	0B41278A	CML 2200P 50V J (UK, AUS, EP, CH, HK, KR, ML)
C919L	0B41278A	CML 2200P 50V J (UK, AUS, EP, CH, HK, KR, ML)
C920L	0B41278A	CML 2200P 50V J (UK, AUS, EP, CH, HK, KR, ML)
CN601	0B85353A	6P Speaker Terminal
CN601L	0B81573A	6P T-Post

3.7. Input L P.C.B. Ass'y

Schematic Ref. No.	Part No.	Description
	BA10127A	**Input L P.C.B. Ass'y (UK, AUS, EP, CH, HK, KR, ML)**
	BA10218A	**Input L P.C.B. Ass'y (JPN, OTR, USA, CAN, DA, TW) [SS-10/11/21]**
R101	0B09677A	RK 1K 1/6W J
R201	0B09677A	RK 1K 1/6W J
R701	0B09677A	RK 1K 1/6W J
R901	0B09677A	RK 1K 1/6W J
C101	0B41288A	CML 0.015 50V J (UK, AUS, EP, CH, HK, KR, ML)
C201	0B41288A	CML 0.015 50V J (UK, AUS, EP, CH, HK, KR, ML)
C701	0B41288A	CML 0.015 50V J (UK, AUS, EP, CH, HK, KR, ML)
C901	0B41288A	CML 0.015 50V J (UK, AUS, EP, CH, HK, KR, ML)
PJ301	0B85351A	4P Pin Jack

3.8. T.PRI P.C.B. Ass'y

Schematic Ref. No.	Part No.	Description
	BA10128A	**T.PRI P.C.B. Ass'y (Except JPN, USA, CAN)**
	BA10205A	**T. PRI P.C.B. Ass'y (JPN, USA, CAN) [SS-10/11/21]**
CP401	0B84275A	Wrapping Terminal 2P
F401	0B90830A	Fuse RP 4A 125V (JPN, USA, CAN)
	0B90868A	Fuse T 2AL250V (Except JPN, USA, CAN)
	0B90757A	Fuse Clip (2)

3.9. Inlet P.C.B. Ass'y

Schematic Ref. No.	Part No.	Description
	BA10193A	**Inlet P.C.B. Ass'y (Except USA, CAN)**
	BA10204A	**Inlet P.C.B. Ass'y (USA, CAN) [SS-10/11/21]**
	0B85361A	AC Inlet UL (USA, CAN) (1)
	0B85362A	AC Inlet EP (Except USA, CAN) (1)

3.10. REM P.C.B. Ass'y

Schematic Ref. No.	Part No.	Description
	BA10241A	**REM P.C.B. Ass'y (Except JPN)**
	BA10242A	**REM P.C.B. Ass'y (JPN) [SS-10/11/21]**
IP601,602	0B12926A	MultiFuse R60R160
D601	0B12249A	SID 1SS133
R601	0B09629A	RK 10 1/6W J
C401	0B41825A	CC 4700P 400V (Except JPN)
	0B41826A	CC 4700P 250V (JPN)
CN401	0B84275A	Wrapping Terminal 2P
CN407	0B85389A	4P Connector Ass'y A
G601,602	0B80791A	Terminal
PC401	0B84275A	Wrapping Terminal 2P
PJ601,602	0B80774A	Mini Jack H
PJ603	0B80774A	Mini Jack H

3.11. V.SEL P.C.B. Ass'y

Schematic Ref. No.	Part No.	Description
	BA10130A	**V.SEL P.C.B. Ass'y (OTR, DA, TW) [SS-10/11/21]**
	0B70285A	Voltage Switch (1)

3.12. T. SEC P.C.B. Ass'y

Schematic Ref. No.	Part No.	Description
	BA10245A	**T.SEC P.C.B. Ass'y (Except JPN, USA, CAN)**
	BA10246A	**T.SEC P.C.B. Ass'y (JPN, USA, CAN) [SS-21]**
CP404	0B85390A	4P Connector Ass'y B
F402	0B90828A	Fuse RP 3A 125V (JPN, USA, CAN)
	0B90867A	Fuse T 1.6A L250V (Except JPN, USA, CAN)
	0B90757A	Fuse Clip (2)

Satellite Speaker [SS-10/11]

Satellite Speaker Section

[SS-10/11]

- Satellite Speaker (Front/Rear)
- Center Speaker

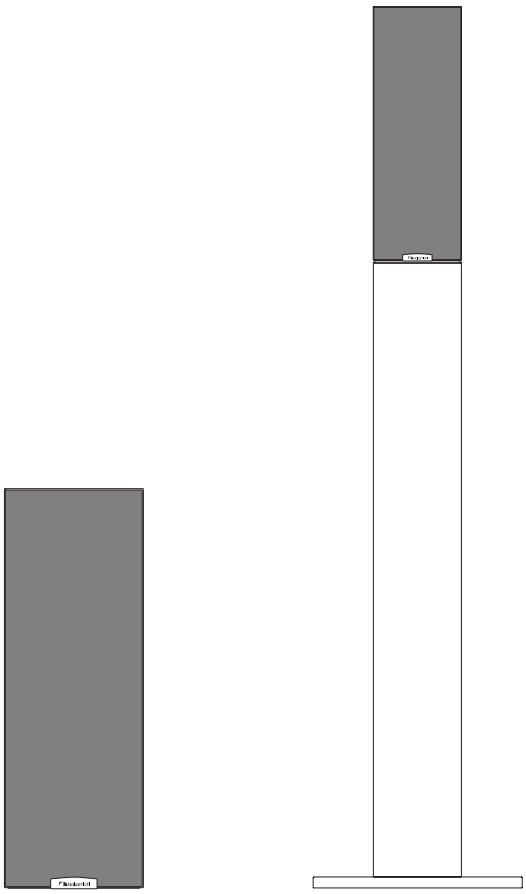

[SS-10] [SS-11]

CONTENTS

SPECIFICATIONS (See the end of this manual.)

1. MECHANISM ASS'Y AND PARTS LIST

1.1. Floor Stand (Front/Rear) [SS-11 Only]

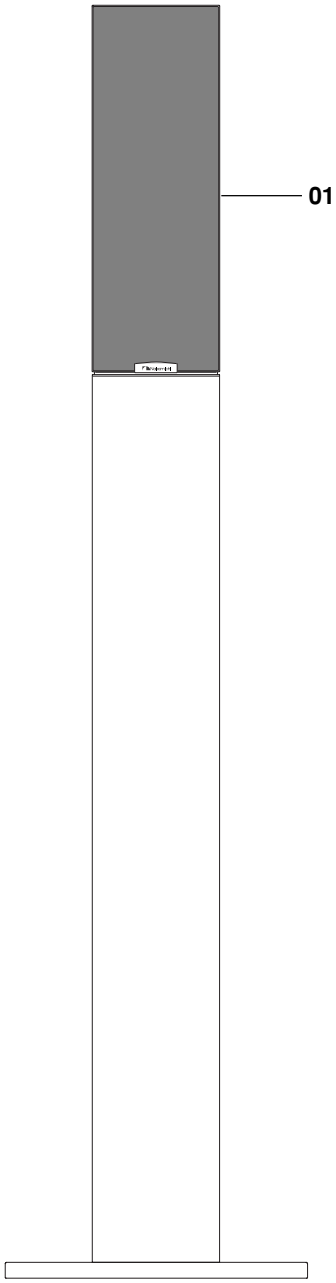

Fig. 1.1

1.1. Floor Stand (Front/Rear) [SS-11 Only]

Schematic Ref. No.	Part No.	Description	Q'ty
	—	**Floor Stand N210 (For Front L/R and Rear L/R Speakers) [SS-11]**	**1**
01	—	Satellite Ass'y (Front/Rear)	1
—	0H08442D	Stand Base D202SAT	1
—	0H08443A	Stand Pole D202SAT	1
—	0H08444B	Stand Top D202SAT	1
—	0J08410A	Stand Spacer D202L	5
—	0E00852A	BT4x12 + Binding (Black)	4
—	0E04204A	BT4x20 + Binding (Black)	4

1.2. Satellite Ass'y (Front/Rear) [SS-10/11]

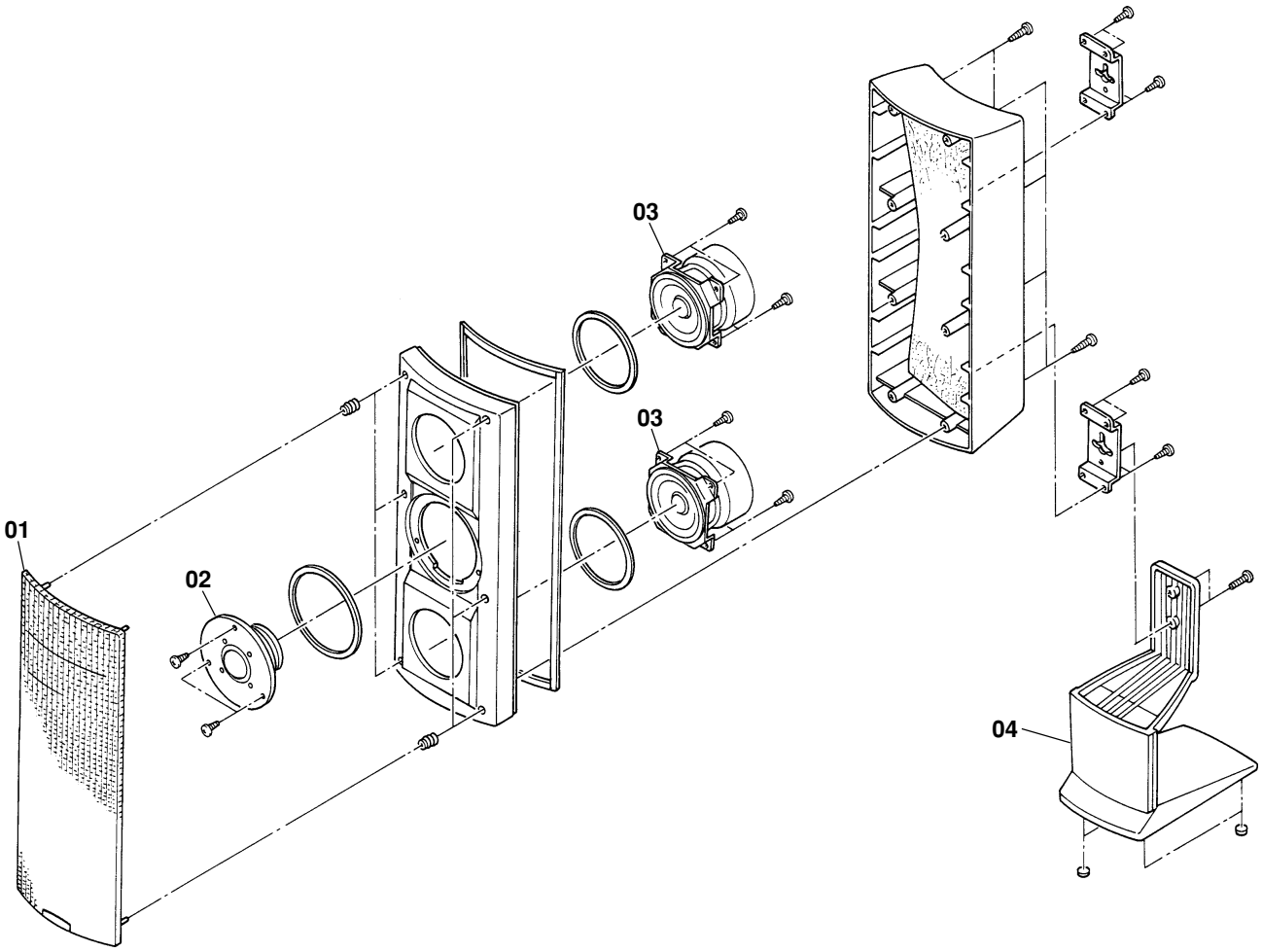

Fig. 1.2

1.2. Satellite Ass'y (Front/Rear) [SS-10/11]

Schematic Ref. No.	Part No.	Description	Q'ty
	—	**Satellite Ass'y (Front/Rear) [SS-10/11]**	**1**
01	CB00631A	Grille GRY Ass'y Satellite	1
02	CB00638A	Satellite Tweeter	1
03	CB00637A	Satellite Woofer Speaker S350F02	2
04	CB00648A	Stand Ass'y Satellite (For Front L/R Speaker)	1

1.3. Center SP Ass'y [SS-10/11]

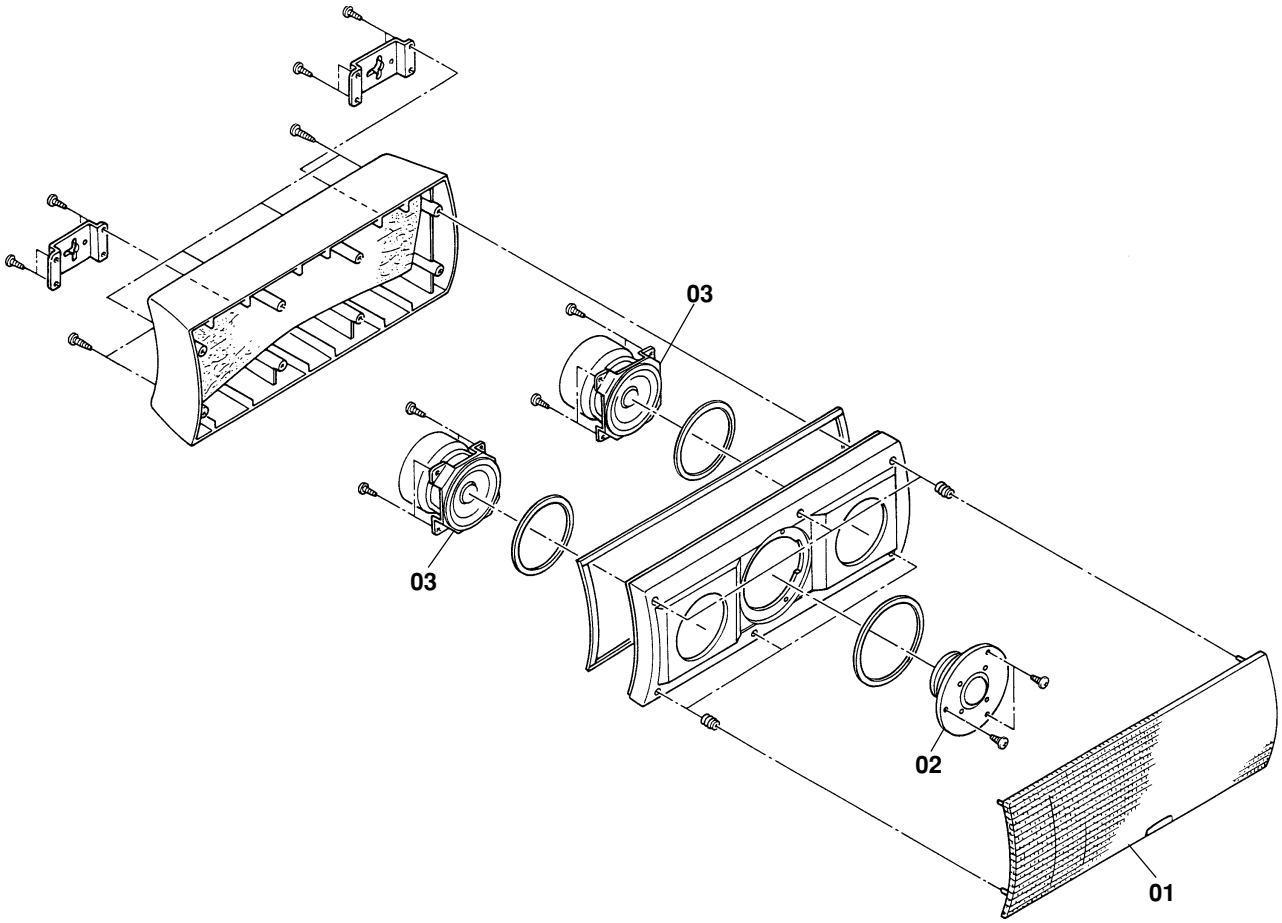

Fig. 1.3

1.3. Center SP Ass'y [SS-10/11]

Schematic Ref. No.	Part No.	Description	Q'ty
	—	**Center SP Ass'y [SS-10/11]**	**1**
01	CB00636A	Grille GRY Ass'y Center	1
02	CB00638A	Satellite Tweeter	1
03	CB00637A	Satellite Woofer Speaker S350F02	2

Satellite Speaker [SS-21]

Satellite Speaker Section

[SS-21]

- Satellite Speaker (Front/Rear)
- Center Speaker

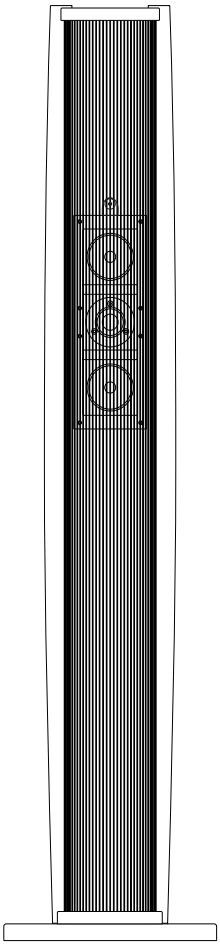

Satellite Speaker (Front/Rear)

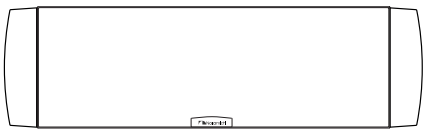

Center Speaker

CONTENTS

1. REMOVAL PROCEDURES

NOTES:
1. Do not use an electric screwdriver to disassemble or assemble the parts.
2. When reassembling, reverse the removal procedure. Follow the note for reassembling, if it is written.

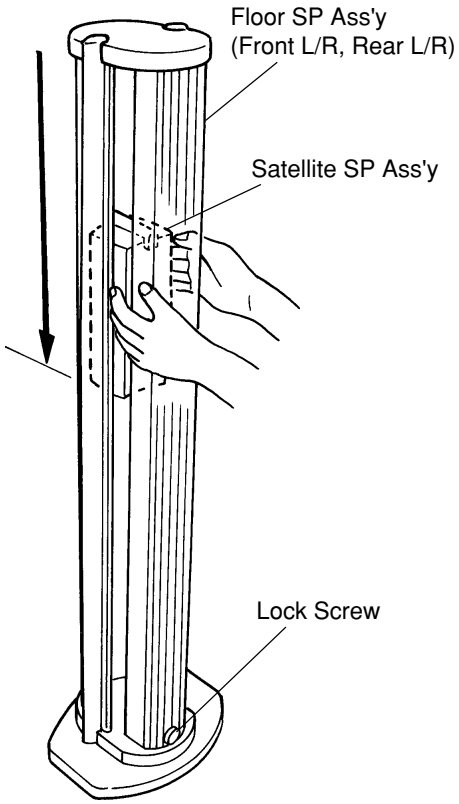

Fig. 1.1

1.1. Main Frame Block

Refer to Figs. 1.1 to 1.4.

(1) Remove the Lock Screw at the bottom of the Floor SP Ass'y. See Fig. 1.1.
(2) Move down the Satellite SP Ass'y by hand until it is located at around the center position. See Fig. 1.1
(3) Remove F01 (Cover Top) by pulling it upward. See Fig. 1.2.
(4) Remove the 3 screws F02 (BT4x12 + Binding (Black)) and loosen the 4 screws. See Fig. 1.2.

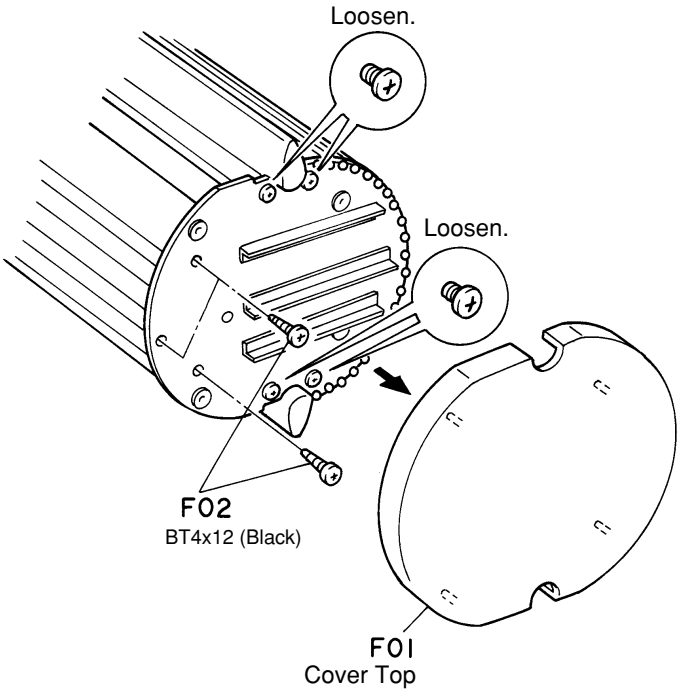

Fig. 1.2 Top View

(5) Remove the 5 screws F03 (BT4x8 + Binding (Black)) and detach F04 (Chassis AMP). See Fig. 1.3.
(6) Remove the 2 screws F05 (PT3x12 + Binding (Black)) and take off F06 from F04 (Chassis AMP). See Fig. 1.3.
(7) Remove the 4 screws F07 (BT4x8 + Binding (Black)), cut the 2 Insu-locks (shown by the arrows), disconnect all connectors, and detach F08 (SP Cont. P.C.B. Ass'y). See Fig. 1.3.
(8) Remove the 1 screw F09 (M3x6 + Binding) and detach F10 (TR P.C.B. Ass'y).
(9) Remove the 4 screws F11 (BT4x45 + Binding) and carefully remove F12 (Main Frame Block). See Fig. 1.4.

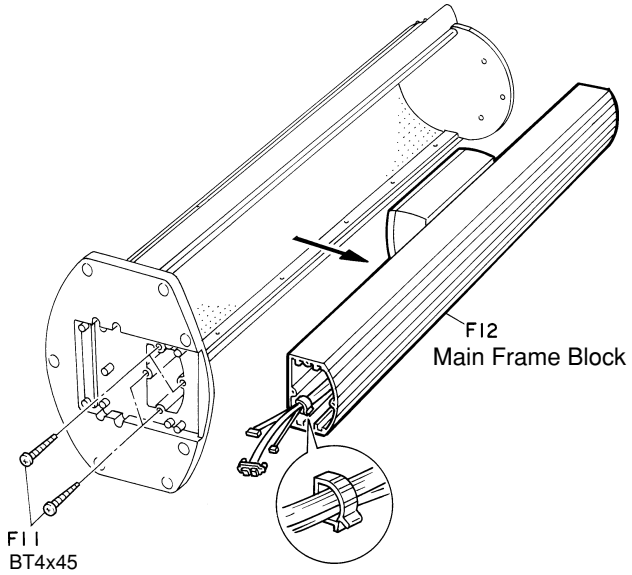

Fig. 1.4 Bottom View

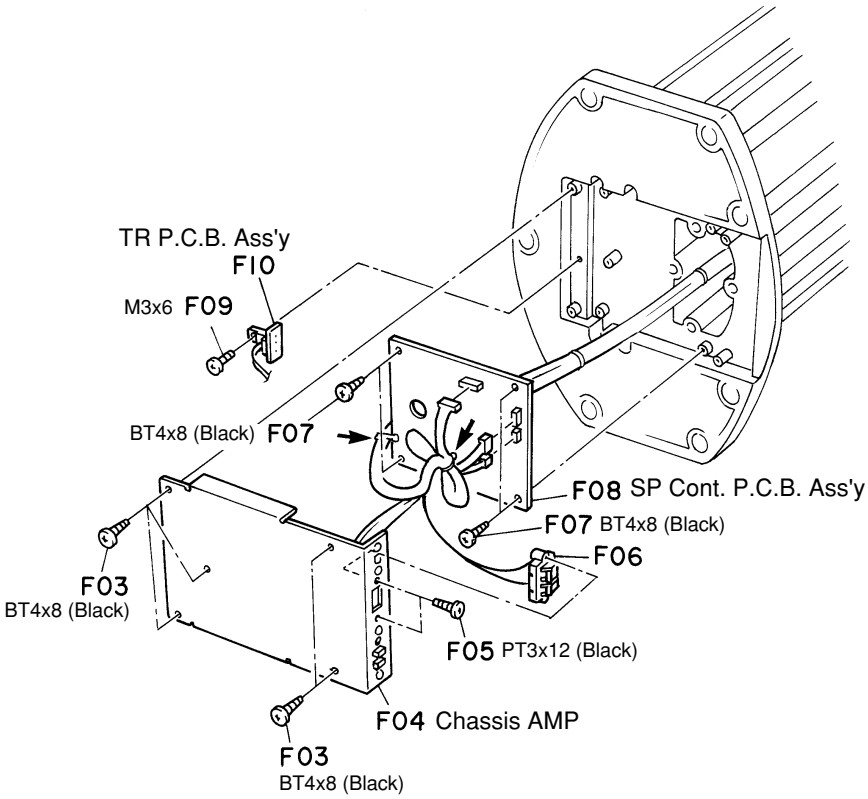

Fig. 1.3 Bottom View

1.2. Satellite SP Block

Refer to Fig. 1.5.

NOTE: Do not pull out or re-insert the Satellite SP Block by yourself. Do it with 2 persons or more.

(1) Remove the Main Frame Block. See item. 1.1.

(2) Remove 8 screws F13/F14 (M3x5 FH HS) and gently pull out F15 (Satellite SP Block).

● Note when reassembling:

When reassembling the Satellite SP Block, insert parts "A", "B", and "C" of the Satellite SP Block into the Main Frame as shown in the figure.

1.3. Plate D Top-Sub

(1) When removing the Plate D Top-Sub, push the motor belt inward as shown in Fig. 1.6 to avoid damage to the motor belt.

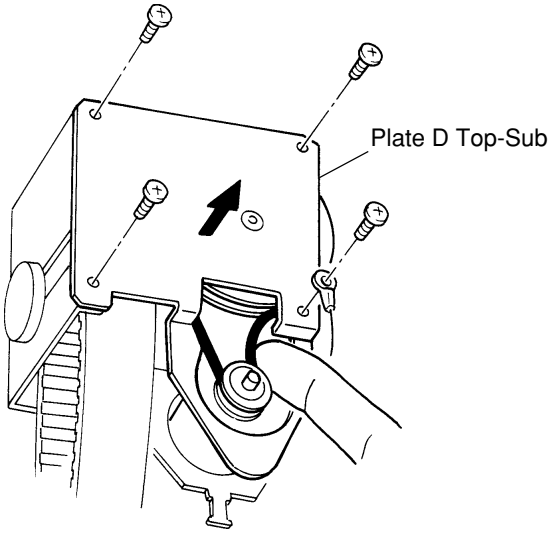

Fig. 1.6

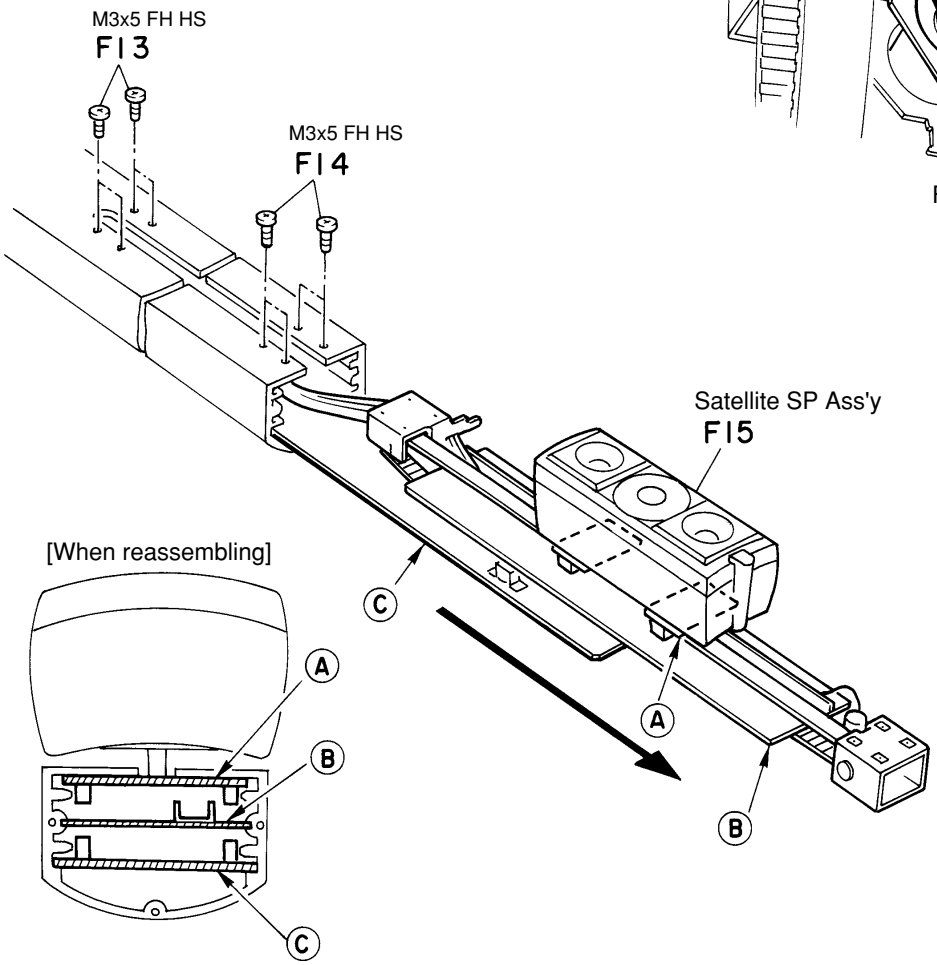

Fig. 1.5

1.4. Belt Removal and Belt Positioning

Note that you need to mark the belt position before you remove the T Belt Drive. If the belt positioning is incorrect, the Satellite SP Ass'y cannot move its movable range.

When removing the T Belt Drive:

- Paint marks on the belt teeth (A, A', B, and B'). See Fig. 1.7.
  NOTE: The number of teeth between A and B is 157.

When reassembling the T Belt Drive:

See Fig. 1.7

- Attach the 2 Belt-ST to the T Belt Drive correctly, while watching the marks on the belt, which were marked by you.
- Be sure that the Wire T SP is fastened to the place shown in the figure.

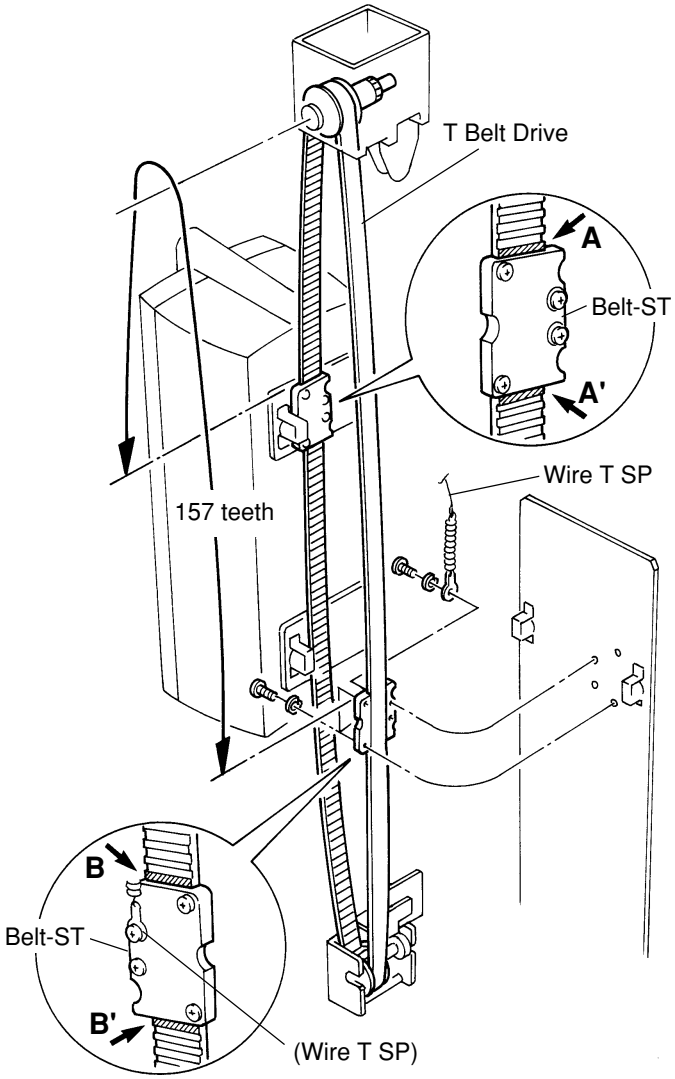

Fig. 1.7 Belt Positioning

1.5. Wire Assembling

Assemble the Wire T SP paying attention to the followings:

- The wire must be fixed to the indicated hole in the Belt-ST.
- The wire must be hooked on SP Pulley SS.
- The wire must be place in the groove of the W Side R.

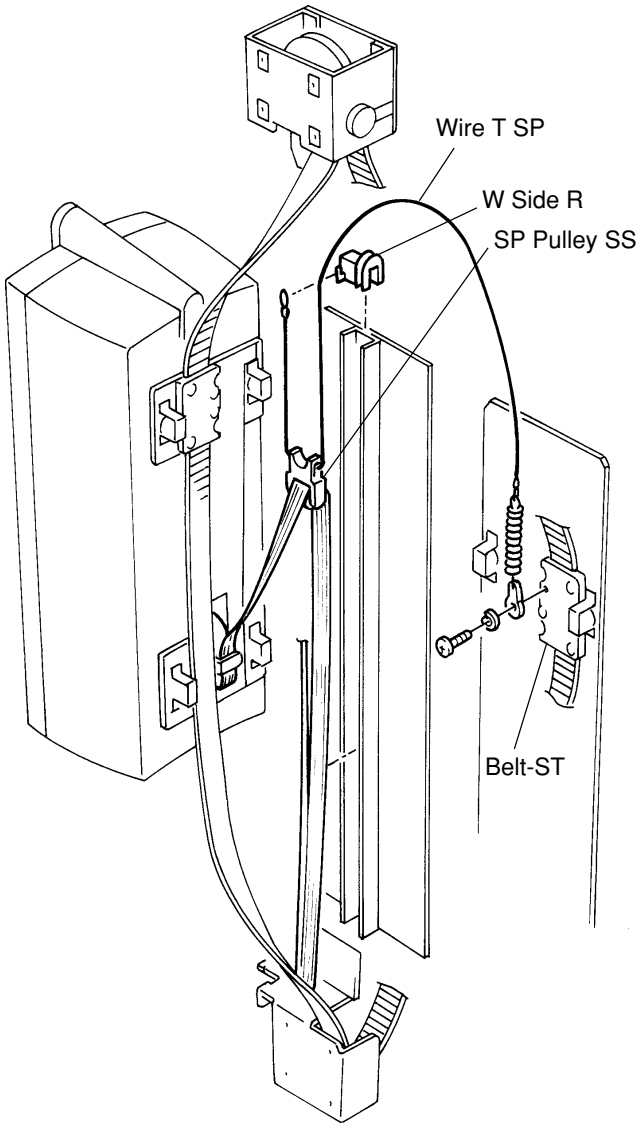

Fig. 1.8 Wire Assembling

2. MECHANISM ASS'Y AND PARTS LIST

2.1. Floor SP Ass'y (Front/Rear) [SS-21]

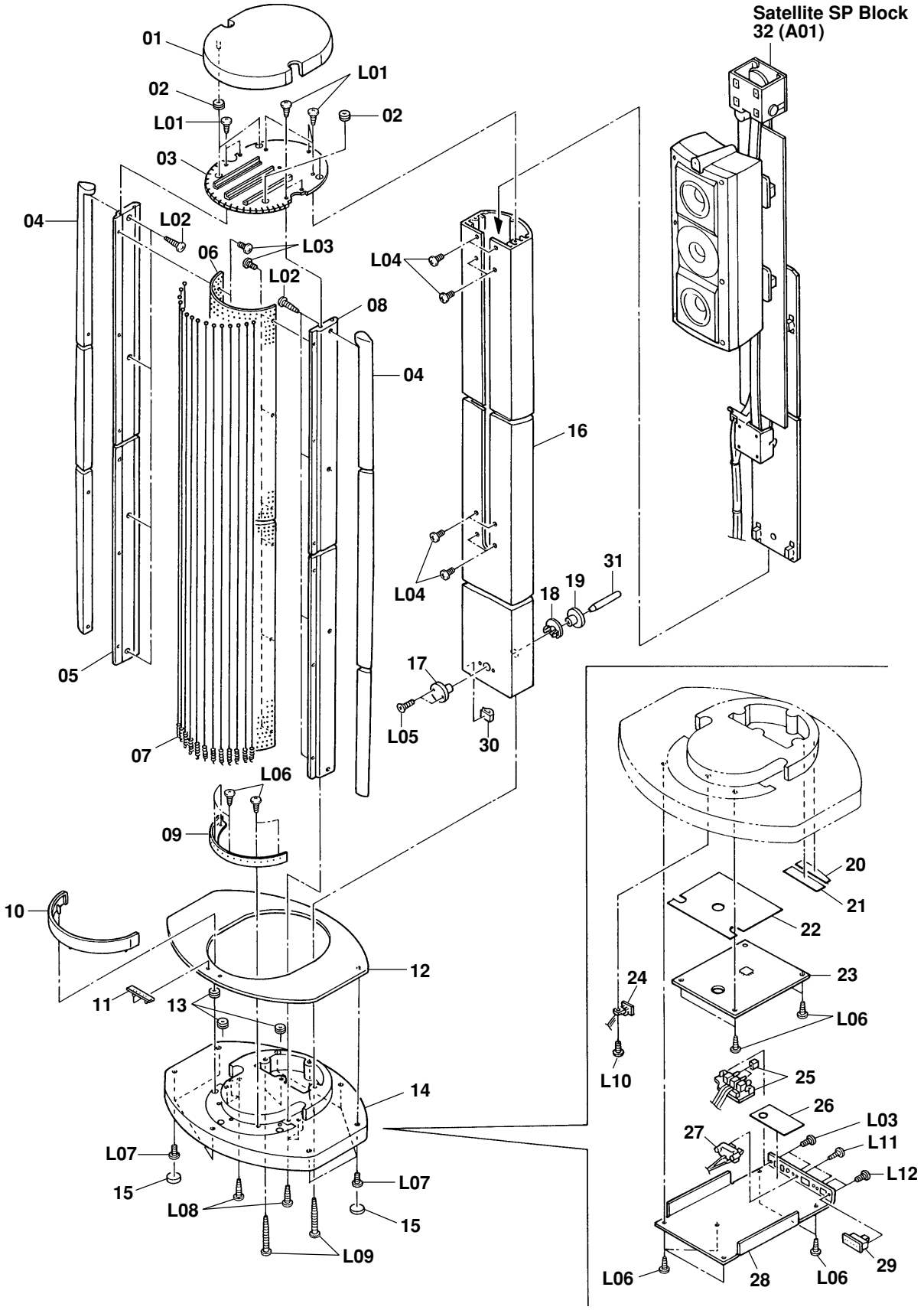

Fig. 2.1

2.1. Floor SP Ass'y (Front/Rear) [SS-21]

Schematic Ref. No.	Part No.	Description	Q'ty
	HG08174B	**Floor SP Ass'y [SS-21]**	**1**
01	0H08509A	Cover Top	1
02	0J08472A	Catcher	4
03	0J08461A	Chassis Top	1
04	0H08504C	Wood Pole SP	2
05	0J08469B	Metal Pole L	1
06	0H08507E	Grille Inner	1
07	0H08508A	Grille Wire	39
08	0J08460B	Metal Pole R	1
09	0J08462A	Chassis Bottom	1
10	0H08549A	Cover Bottom	1
11	0H08606A	Name Badge	1
12	0H08577A	Base Top SP	1
13	2J00210A	Grill Holder SA	3
14	0H08502E	Base	1
15	0J08410A	Stand Spacer L	7
16	0C10353C	Main Frame	1
17	0C10394B	Lock Flange	1
18	0C10398A	Lock Flange Guide	1
19	0C10395A	Lock Flange Rear	1
20	0J08491A	Insulator C	1
21	0J08490A	Insulator B	1
22	0J08489A	Insulator A	1
23	BA10222A	SP Cont. P.C.B. Ass'y	1
24	BA10250A	TR P.C.B. Ass'y	1
25	BA10231A	Push S P.C.B. Ass'y	1
26	0J08493A	Insulator D	1
27	0B85523A	Terminal SP	1
28	0H08503A	Chassis AMP	1
29	BA10230A	Slide S P.C.B. Ass'y	1
30	0E04218A	SP Cable Clamp	1
31	0C10396A	Lock Screw	1
32	—	Satellite SP Block	1
L01	0E00852A	BT4x12 + Binding (Black)	
L02	0E04203A	4x30 +Binding (Black)	
L03	0E03270A	M3x5 + Binding (Black)	
L04	0E04216A	M3x5 FH HS	
L05	0E04215A	M3x6 + Countersunk	
L06	0E00915A	BT4x8 + Binding (Black)	
L07	0E00953A	M4x10 + Binding (Black)	
L08	0E00878A	BT4x20 + Binding	
L09	0E04202A	BT4x45 + Binding	
L10	0E00896A	M3x6 + Binding	
L11	0E04223A	PT3x12 + Binding (Black)	
L12	0E00945A	M2.6x4 + Binding (Black)	

2.2. Floor SP Ass'y - Satellite SP Block (Front/Rear) (A01) [SS-21]

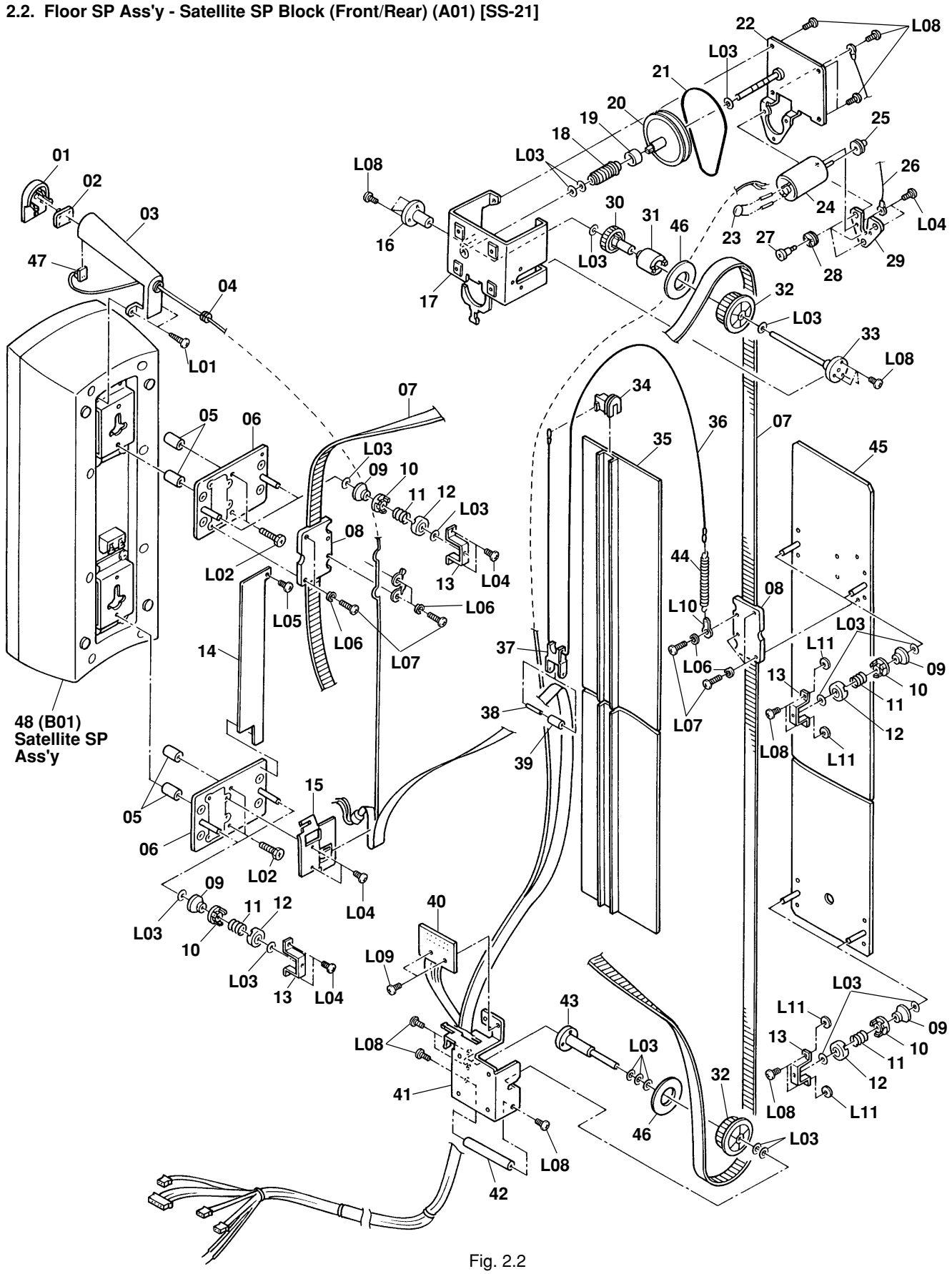

Fig. 2.2

2.2. Floor SP Ass'y - Satellite SP Block (Front/Rear) (A01) [SS-21]

Schematic Ref. No.	Part No.	Description	Q'ty
A01	**—**	**Satellite SP Block [SS-21]**	**1**
01	0H08572A	LED Cover F	1
02	0H08574A	LED Lens	1
03	0H08573A	LED Cover R	1
04	0J08531B	Cord Bushing LED	1
05	0C10382B	Collar SP Joint	4
06	CG09483A	Guide Plate SUB	2
07	0C10373A	T Belt Drive	1
08	0C10354A	Belt-ST	2
09	0C10358A	Roller F	8
10	0C10359A	Roller R	8
11	0C10391A	Spring Guide Plate	8
12	0C10362A	Flange SSP	8
13	0C10363A	Plate Roller	8
14	0C10407B	W Sheet	1
15	CG09473A	Cable Guide SUB	1
16	0C10384A	Flange DR	1
17	CA09443A	Plate Drive SUB	1
18	0C10361A	Worm 05	1
19	0C10409A	PW Guide	1
20	0C10357A	Pulley Drive	1
21	0C10372A	M Belt Drive	1
22	CA09444A	Plate D Top -SUB	1
23	0B42087A	CML 0.01 50V J	1
24	0B90929A	Motor Drive	1
25	0C10356B	Motor Pulley	1
26	0B85522A	GND Wire Ass'y	1
27	0C10287A	Damper Screw SL	3
28	0C10279A	Damper S SL	3
29	0C10379A	Plate Motor	1
30	0C10355A	Gear Hasu 05	1
31	0C10374A	Clutch Drive	1
32	0C10360A	S5M Pulley	2
33	CA09442A	Flange D SUB	1
34	0C10406B	W Slide R	1
35	0C10408B	Guide SP C	1
36	0C10431A	Wire T SP	1
37	0C10405A	SP Pulley SS	1
38	0C10404A	Shaft SP Pulley	1
39	0C10401A	SP Pulley	1
40	BA10223A	Sensor P.C.B. Ass'y	1
41	0C10366C	Plate TE Pulley	1
42	0C10383A	Shaft TP L	1
43	CA09441A	Flange DR SUB	1
44	0C10400A	Spring SP Guide	1
45	CG09484A	P Plate SUB	1
46	0C10381A	Flange Pulley	2
47	BA10244A	SP LED P.C.B. Ass'y	1
48	—	Satellite SP Ass'y	1
L01	0E04177A	PT4x12 + Binding (Black)	
L02	0E04214A	M5x20 Hex. Head	
L03	0E04210A	Washer 4.1x8x0.125	
L04	0E04047A	M3x3 + Bind	
L05	0E04221A	ST2x3 +Binding	
L06	0E00581A	Spring Washer 3mm	
L07	0E00766A	M3x8 + Binding	
L08	0E00896A	M3x6 + Binding	
L09	0E03669A	M2x4 + Binding	
L10	0E04198A	SP Plug	
L11	0E04212A	Washer 4x10x0.8	

2.3. Floor SP Ass'y - Satellite SP Ass'y (Front/Rear) (B01) [SS-21]

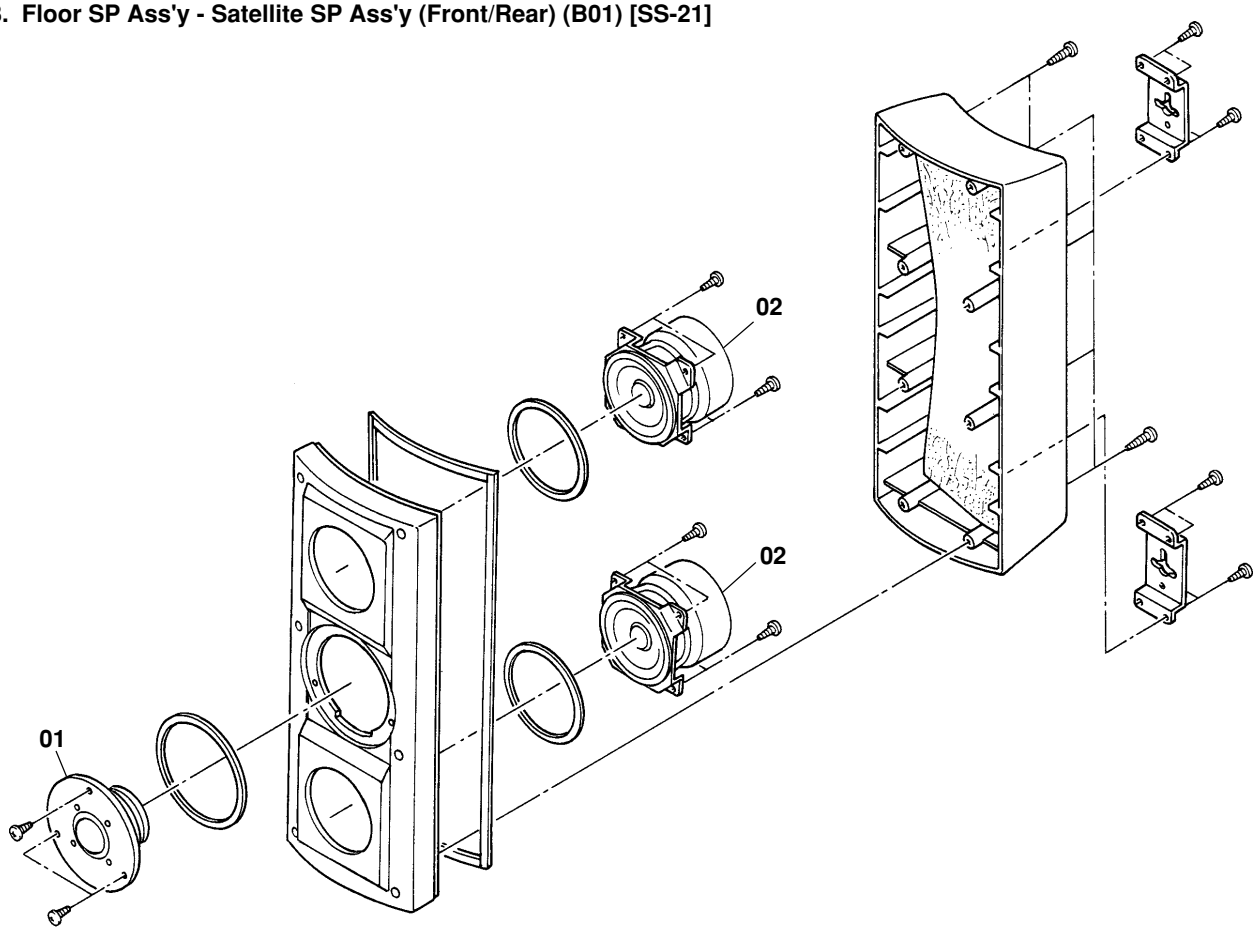

Fig. 2.3

2.3. Floor SP Ass'y - Satellite SP Ass'y (Front/Rear) (B01) [SS-21]

Schematic Ref. No.	Part No.	Description	Q'ty
B01	**—**	**Satellite SP Ass'y [SS-21]**	**1**
01	CB00638A	Satellite Tweeter	1
02	CB00637A	Satellite Woofer Speaker S350F02	2

2.4. Center SP Ass'y [SS-21]

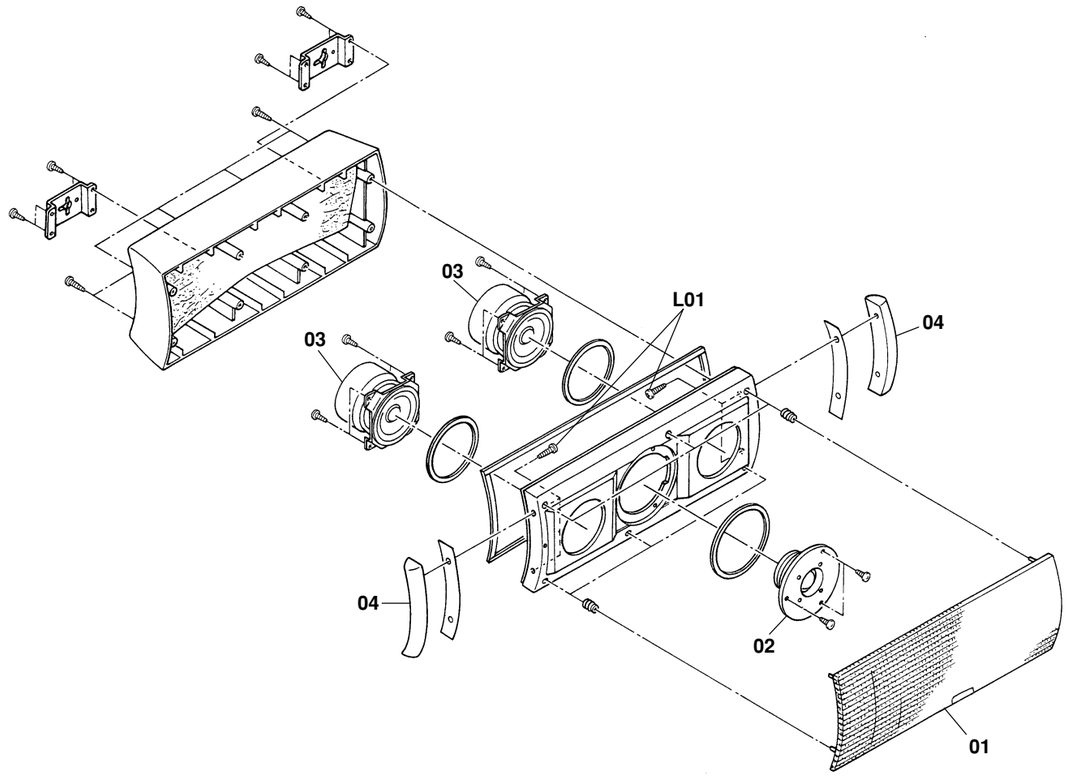

Fig. 2.4

2.4. Center SP Ass'y [SS-21]

Schematic Ref. No.	Part No.	Description	Q'ty
	—	**Center SP Ass'y [SS-21]**	**1**
01	CB00636A	Grill GRY Ass'y Center	1
02	CB00638A	Satellite Tweeter	1
03	CB00637A	Satellite Woofer Speaker S350F02	2
04	0H08505D	Wood Pole Center	2
L01	0E04141A	4x6 + Pan Tapping	

NOTES: 1. Abbreviations
TR – Transistor, SID – Silicon Diode, ZD – Zener Diode, Varicap – Variable Capacitance Diode
RK – Carbon Resistor, RM – Metal Film Resistor, RF – Fail Safe Type Resistor,
RC – Cement Resistor, CE – Electrolytic Capacitor, CML – Mylar Capacitor,
CC – Ceramic Capacitor, CPP – PP Capacitor, CMM – Metalized Mylar Capacitor,
CSP – Polystyrene Capacitor, C – Mica Capacitor, CT – Tantalum Capacitor
2. Description of capacitor: 10 16V = 10µ 16V
3. Parts marked with * show chip parts.

3.1. SP Cont. P.C.B. Ass'y

Schematic Ref. No.	Part No.	Description
	BA10222A	**SP Cont. P.C.B. Ass'y [SS-21]**
IP902	0B11248A	IC Protector ICP-N5 0.25A
IP903	0B11640A	IC Protector ICP-N38 1.5A
IP904	0B11248A	IC Protector ICP-N5 0.25A
U901	0B12936A	IC UPD78P018FGC*
U902,903	0B11611A	IC TC4584BP
U904	0B11753A	IC NJM7805FA
U906	0B12917A	IC TA7267BP
Q902,903	0B10025A	TR 2SC945L
Q904,905	0B10025A	TR 2SC945L
ZD901	0B12165A	ZD RD9.1V JS B2
ZD902	0B12162A	ZD RD8.2V JS B2
ZD903	0B12153A	ZD RD6.2V JS B2
ZD904	0B12150A	ZD RD5.6V JS B2
D901,902	0B12249A	SID 1SS133
D903,904	0B12249A	SID 1SS133
D905,906	0B12249A	SID 1SS133
D907,908	0B12249A	SID 1SS133
D909,910	0B12586A	SiD 1N4002
D911,912	0B12586A	SiD 1N4002
X901	0B92034A	Resonator 4.19MHz
R901,902	0B09713A	RK 33K 1/6W J
R903,904	0B09713A	RK 33K 1/6W J
R905,906	0B09713A	RK 33K 1/6W J
R907	0B09713A	RK 33K 1/6W J
R908,909	0B09717A	RK 47K 1/6W J
R910	0B09717A	RK 47K 1/6W J
R911	0B09657A	RK 150 1/6W J
R912,913	0B09677A	RK 1K 1/6W J
R914	0B09677A	RK 1K 1/6W J
R916	0B09707A	RK 18K 1/6W J
R917	0B09679A	RK 1.2K 1/6W J
R918	0B25679A	RM 22K 1/4W F
R919	0B09689A	RK 3.3K 1/6W J
R920	0B09713A	RK 33K 1/6W J
R921	0B09677A	RK 1K 1/6W J
R922	0B09717A	RK 47K 1/6W J
R923	0B09681A	RK 1.5K 1/6W J
R924	0B09721A	RK 68K 1/6W J
R925	0B09701A	RK 10K 1/6W J
R926	0B09727A	RK 120K 1/6W J
R927	0B09717A	RK 47K 1/6W J
R928	0B09701A	RK 10K 1/6W J
R929	0B09725A	RK 100K 1/6W J
R930	0B09665A	RK 330 1/6W J
R931	0B09677A	RK 1K 1/6W J
R932	0B09717A	RK 47K 1/6W J
R933,934	0B09725A	RK 100K 1/6W J
R935	0B09725A	RK 100K 1/6W J
R936	0B09705A	RK 15K 1/6W J
R937	0B09641A	RK 33 1/6W J
R940,941	0B09677A	RK 1K 1/6W J
R942,943	0B09677A	RK 1K 1/6W J
R944,945	0B09677A	RK 1K 1/6W J
R946,947	0B09677A	RK 1K 1/6W J
R950	0B09717A	RK 47K 1/6W J
R952	0B09725A	RK 100K 1/6W J
C301,302	0B40893A	CE 2200 25V
C303	0B40879A	CE 1000 16V
C901	0B42099A	CML 0.1 50V J
C904	0B40875A	CE 100 16V
C905	0B42231A	CML 1000P 50V J
C906	0B40915A	CE 1 50V
C907	0B42095A	CML 0.047 50V J
C908	0B40875A	CE 100 16V
C909	0B42247A	CE 0.1F 5.5V
C910,911	0B40875A	CE 100 16V
C912,913	0B42099A	CML 0.1 50V J
C914	0B42099A	CML 0.1 50V J
CN501	0B81463A	6P T-Post
CN502	0B81459A	2P T-Post
CN901	0B81464A	7P T-Post
CN902	0B84278A	2P T-Post BLK
CN903	0B84276A	2P T-Post RED
CP902	0B85489B	2P Connector Ass'y B
CP904	0B85524A	3P Wire Ass'y

3.2. Sensor P.C.B. Ass'y

Schematic Ref. No.	Part No.	Description
	BA10223A	**Sensor P.C.B. Ass'y [SS-21]**
R001,002	0B25525A	RK 270 1/10W J*
R003,004	0B25525A	RK 270 1/10W J*
R005,006	0B25525A	RK 270 1/10W J*
R007	0B25525A	RK 270 1/10W J*
CP901	0B85487B	2P Connector Ass'y A
CP903	0B85488B	7P Connector Ass'y A
PC001,002	0B10671A	Photo Reflector
PC003,004	0B10671A	Photo Reflector
PC005,006	0B10671A	Photo Reflector
PC007	0B10671A	Photo Reflector

3.3. Slide S P.C.B. Ass'y

Schematic Ref. No.	Part No.	Description
	BA10230A	**Slide S P.C.B. Ass'y [SS-21]**
CP503	0B85500A	2P Connector Ass'y C
SW903	0B70272A	Slide SW

3.4. Push S P.C.B. Ass'y

Schematic Ref. No.	Part No.	Description
	BA10231A	**Push S P.C.B. Ass'y [SS-21]**
CP501	0B85502A	6P Connector Ass'y
G901,902	0B80791A	Terminal
PJ901	0B80774A	Mini Jack H
SW901,902	0B70287A	Push SW SPPJ2
	0B70288A	Push SW Knob (2)

3.5. SP LED P.C.B. Ass'y

Schematic Ref. No.	Part No.	Description
	BA10244A	**SP LED P.C.B. Ass'y [SS-21]**
LED901	0B12900A	LED Blue
R951	0B25519A	RK 150 1/10W J*
C950	0B43210A	CC 1000P 50V J*
CP502	0B85501C	8P Connector Ass'y D

3.6. TR P.C.B. Ass'y

Schematic Ref. No.	Part No.	Description
	BA10250A	**TR P.C.B. Ass'y [SS-21]**
Q901	0B12938A	TR 2SB1481

4. IC BLOCK DIAGRAMS

U901 μPD78P018FGC (Satellite Speaker Controller)

Pin No.	Signal Name	I/O	Function	Active	Standby
1	TP	—	—		
2-8	NC	—	—		
9	VSS	—	GND		
10	S1	I	Sensor signal 1 for detecting the speaker position.		
11	S2	I	Sensor signal 2 for detecting the speaker position.		
12	S3	I	Sensor signal 3 for detecting the speaker position.		
13	S4	I	Sensor signal 4 for detecting the speaker position.		
14	S5	I	Sensor signal 5 for detecting the speaker position.		
15	S6	I	Sensor signal 6 for detecting the speaker position.		
16	S7	I	Sensor signal 7 for detecting the speaker position.		
17	NC	—	—		
18	MOT1	O	Output to motor driver IC	H	L
19	MOT2	O	Output to motor driver IC	H	L
20	LED	O	LED ON control signal during speaker moving.	L	L
21	MUP	I	Manual Up key input.		
22	MDOWN	I	Manual Down key input.		
23	ADDRESS	I	Address bit to set whether the speaker is used for Front or Rear.		
24	VSS	—	GND		
25	NC	—	—		
26	NC	—	—		
27	MV1	O	Motor application voltage control signal.	L	L
28	MV2	O	Motor application voltage control signal.	L	L
29	MV3	O	Motor application voltage control signal.	L	L
30	MV4	O	Motor application voltage control signal.	L	L
31	MV5	O	Motor application voltage control signal.	L	L
32	MV6	O	Motor application voltage control signal.	L	L
33	NC	—	—		
34	$\overline{\text{NC}}$	—	—		
35	RESET	I	Reset signal.	L	
36	$\overline{\text{REM}}$	I	Remote controller signal.	H/L	—
37	BSENSE	I	BATT voltage detect input.	L	—
38	NC	—	—		
39	NC	—	—		
40	VDD	—	+5V		
41	X2	—	X'tal is connected (4.19 MHz).		
42	X1	—	X'tal is connected (4.19 MHz).		
43	IC	—	Grouned.		
44	NC	—	—		
45	XT1	—	Supplied with +5V.		
46	AVSS	—	Analog GND		
47-54	NC	—	—		
55	AVDD	—	+5V		
56	AVREF	—	Grouned.		
57-64	NC	—	—		

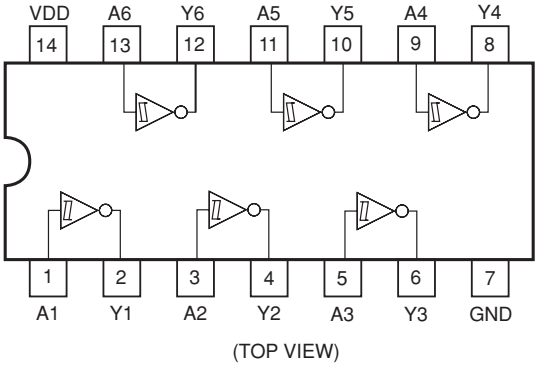

Fig. 4.1 Schmitt Inverter TC4584BP (U902, 903)

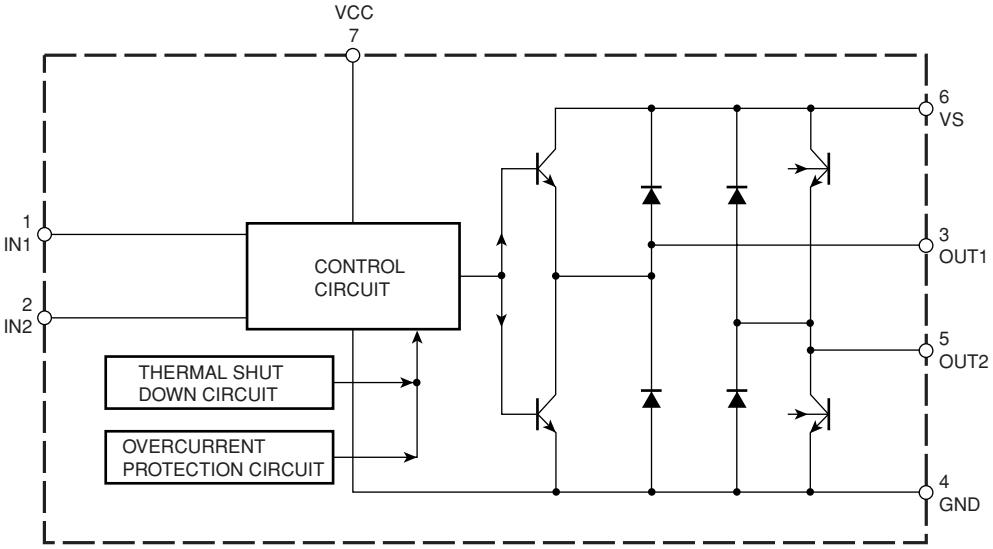

Fig. 4.2 Motor Driver TA7267BP (U906)

SPECIFICATIONS

■ Main Unit

CD Section

Outputs (SONY TYPE-3, Vol 49), 1 kHz, 0 dB
- Pre Output Level ..... 2.0 V ± 2 dB (Tr. No. 1)

Total Harmonic Distortion + Noise (SONY TYPE-3 Vol 49)
- 1 kHz 0 dB ..... Less than 0.006% (Tr. No. 1)

Frequency Response (SONY TYPE-3, Vol 49)
- Front 200 Hz to 20 kHz ..... -1 dB ± 2 dB
- Subwoofer 20 Hz ..... 1 dB ± 2 dB

Channel Separation (SONY TYPE-3, Vol 49)
- 1 kHz 0 dB ..... More than 75 dB (Tr. No. 30, 34)

Signal-to-Noise Ratio (SONY TYPE-3, Vol 49) ..... More than 95 dB (Tr. No. 23)

De-emphasis (SONY TYPE-3, Vol 49)
- 1 kHz ..... -0.4 dB ± 2 dB (Tr. No. 39)
- 5 kHz ..... -4.5 dB ± 2 dB (Tr. No. 40)
- 16 kHz ..... -9 dB ± 2 dB (Tr. No. 41)

Dynamic Range
- 1 kHz -60 dB ..... More than 95 dB (Tr. No. 20)

Interruption (A-BEX TCD-725A) ..... Not be interrupted at 0.7 mm (Tr. No. 3)

Black Dot (A-BEX TCD-725A) ..... Not be interrupted at 0.6 mm (Tr. No. 8)

Finger Print (A-BEX TCD-725A) ..... Not be disturbed by simulated finger print except for Noise at 65 μm (Tr. No. 13)

Eccentricity (A-BEX TCD-712R) ..... Except for Noise at 140 μm (Tr. No. 1,15)

DVD Player Section

Outputs (VT-501 T51 C1 1 kHz/C9 30 Hz, Vol 49)
- Front, Center, Rear ..... 2.0V ± 2 dB
- Subwoofer LFE ATT ON ..... 1.2V ± 2 dB
- LFE ATT OFF ..... 3.8V ± 2 dB

Total Harmonic Distortion + Noise (VT-501 T9 C7, Vol 49)
- 1 kHz 0 dB ..... Less than 0.03%

Frequency Response (VT-501 T50 C1/20 kHz C6/1 kHz, Vol 49)
- Front, Center, Rear 20 kHz ..... 0 dB ± 2 dB

Interruption (PTD5-INT) ..... Not be interrupted at 0.5 mm (T1, C8)

Black Dot (A-BEX TDV-525) ..... Not be interrupted at 0.4 mm (C7)

Finger Print (A-BEX TDV-525) ..... Not be disturbed by simulated finger print at 65 μm (C13)

Vertical Deviation (A-BEX TDV-532) ..... Not be interrupted at 0.6 mm (C16)

Eccentricity (A-BEX TDV-512) ..... Not be interrupted at 100 μm (C1)

■ Tuner Section

FM Tuner Section

•Standard Test Condition (S.T.C.)

RF input levels are given re 75 Ω Antenna Terminal, 1 kHz, 65 dBf.

Modulation ..... Mono: 100%, Stereo: Pilot 10%, Audio Signal: 90%

RF Frequency
- Except Japan ..... 98.1 MHz
- Japan ..... 83.0 MHz

Tuning Range
U.S.A./Canada ..... 87.5 - 107.9 MHz in 200 kHz steps
Japan ..... 76.0 - 90.0 MHz in 100 kHz steps
Other Area ..... 87.5 - 108.0 MHz in 50 kHz steps

•Mono

Usable Sensitivity (THD 3%)
Japan ..... Less than 20 dBμV
Except Japan ..... Less than 30 dBμV
Quieting Sensitivity (S/N = 50 dB)
Japan ..... Less than 25 dBμV
Except Japan ..... Less than 35 dBμV
Output Level ..... 460 mV ± 3 dB
Signal-to-Noise Ratio ..... More than 65 dB
Distortion ..... Less than 1.5%
Frequency Response (at 1 kHz 0 dB without IHF Filter)
30 Hz ..... -3 dB ± 3 dB
15 kHz ..... -15 dB ± 3 dB
Seek Stop Level ..... Within 20 dBμV to 46 dBμV
Limiting Sensitivity (Output -3 dB) ..... Less than 20 dBμV

•Stereo

Stereo Separation (1 kHz)
Japan ..... More than 30 dB
Except Japan ..... More than 18 dB
Signal-to-Noise Ratio ..... More than 60 dB
Distortion ..... Less than 1.5%

AM Tuner Section

•Standard Test Condition (S.T.C.)

RF input levels are given by Loop Antenna, 90 dB/m.
Modulation ..... 30% mod, 400 Hz
RF Frequency
U.S.A. Band ..... 1000 kHz
Europe Band ..... 999 kHz
Tuning Range
U.S.A./Canada ..... 530 kHz - 1,710 kHz in 10 kHz steps
EP ..... 522 kHz - 1,611 kHz in 9 kHz steps
Other Area ..... 531 kHz - 1,602 kHz in 9 kHz steps
Japan ..... 522 kHz - 1,629 kHz in 9 kHz steps

Usable Sensitivity (S/N = 20 dB) ..... Less than 64 dBμ
Output Level ..... 140 mV ± 3 dB
Signal-to-Noise Ratio (at 0 dB=Above Output Level) . More than 40 dB
Distortion ..... Less than 2.0%
Frequency Response (at 400 Hz 0 dB without Filter)
50 Hz ..... -16 dB ± 3 dB
3 kHz ..... -10 dB ± 5 dB
Seek Stop Level ..... Within 45 dBμ to 63 dBμ

■ Preamplifier Section

•Standard Test condition (S.T.C.)

Signal	1 kHz
Input AUX	200 mV
Output Pre out	1000 mV

Sensitivity (Output 1000 mV)		
Front L/R	1 kHz	200 mV ± 2 dB
Subwoofer L/R	20 Hz	180 mV ± 2 dB
Subwoofer	20 Hz	125 mV ± 2 dB
Signal-to-Noise Ratio (Input Shorted)		More than 82 dB (A-WTD)
Frequency Response (Center: Pro Logic, Ref. 200 Hz)		
Front, Center	200 Hz to 20 kHz	0 dB ± 2 dB
	60 Hz	-12 dB ± 2 dB
Subwoofer L/R	20 Hz	1 dB ± 2 dB (L/R Input)
	240 Hz	-11 dB ± 2 dB
Subwoofer	20 Hz	+3.5 dB ± 2 dB
	1.6 kHz	-2.5 dB ± 2 dB
Distortion		Less than 0.03%
Separation		
1 kHz		More than 65 dB
Tone Control (VR. Max.)		
Bass	Subwoofer 20 Hz	+10 dB ± 2 dB
		-10 dB ± 2 dB
Treble	Front, Center (at Pro Logic) 20 kHz	+10 dB ± 2 dB
		-10 dB ± 2 dB
Loudness (VR: 30)		
Subwoofer	20 Hz	+10 dB ± 3 dB
Front, Center (at Pro Logic)	20 kHz	+6 dB ± 3 dB
Output (Input 200 mV)		
Remote	1 kHz	280 mV ± 2 dB
Rec Out	1 kHz	200 mV ± 2 dB
Maximum Output Level		
1% THD		More than 7 V

■ Power Amplifier Section

•Standard Test Condition (S.T.C.)

Signal	1 kHz
Output	1 W

Output Power (1 ch driven, 1 kHz)		
Front, Center, Rear	4 Ω Load	More than 30 W at 0.1% Dist.
Woofer	4 Ω Load	More than 50 W at 0.1% Dist.
Frequency Response		
20 Hz to 20 kHz		0 dB ± 2 dB
Distortion (at Rated Power)		
20 Hz to 20 kHz		Less than 0.3%

Signal-to-Noise Ratio (Input short)	
At Rated Power	More than 95 dB (A-WTD)
Input Sensitivity (at Rated Power)	
Front, Center, Rear	850 mV ± 2 dB
Subwoofer	1100 mV ± 2 dB

■ Speaker Section

Subwoofer

Enclosure	Bass-reflex type
Driver Unit	20 cm cone/magnetically shielded
Impedance	4 Ω
Rated Power Handling	50 W
Maximum Power Handling	80 W

Front/Center/Rear Speakers

Enclosure	2-way sealed type
Driver Units	
Mid-range/woofer	8 cm cone/magnetically shielded
Tweeter	2.5 cm soft dome/magnetically shielded
Impedance	4 Ω
Rated Power Handling	30 W
Maximum Power Handling	50 W

■ Remote Control Units

Principle	Infrared pulse system
Power Supply	
Main Remote Control	For signal transmission: 3 V DC (1.5 V × 2) For backlighting: 6 V DC (1.5 V × 4)
Sub Remote Control	3 V DC (1.5 V × 2)
Dimensions*	
Main Remote Control	210 (W) × 55 (H) × 130 (D) mm
Sub Remote Control	49 (W) × 26 (H) × 110 (D) mm
Mass	
Main Remote Control	Approx. 700 g (including batteries)
Sub Remote Control	Approx. 60 g (including batteries)

■ General

Power Source	120 V AC, 60 Hz (U.S.A./Canada) 230 V AC, 50/60 Hz (Europe) 100 V AC, 50/60 Hz (Japan) AC 110 - 120 V or AC 220 - 240 V, 50/60 Hz (Other)
Power Consumption	
A/V Tuner/Processor Unit	Max. 75 W
Subwoofer Unit (L)	Max. 340 W
Subwoofer Unit (R)	Max. 275 W
AC Outlets	Switched × 2, max. 200 W (total)

Dimensions*	
[SS-10/11]	
Main Unit	205 (W) × 430 (H) × 120 (D) mm
A/V Tuner/Processor Unit	430 (W) × 100 (H) × 325 (D) mm
Subwoofer Unit	294 (W) × 565 (H) × 392 (D) mm
Satellite Speaker	120 (W) × 347 (H) × 117 (D) mm
Center Speaker	347 (W) × 120 (H) × 117 (D) mm
[SS-21]	
Main Unit	350 (W) × 1,511 (H) × 282 (D) mm
A/V Tuner/Processor Unit	430 (W) × 100 (H) × 325 (D) mm
Subwoofer Unit	311 (W) × 565 (H) × 392 (D) mm
Satellite Speaker	350 (W) × 1,511 (H) × 282 (D) mm
Center Speaker	393 (W) × 120 (H) × 117 (D) mm
Mass	
[SS-10/11]	
Main Unit	Approx. 5.1 kg
A/V Tuner/Processor Unit	Approx. 6.9 kg
Subwoofer Unit	Approx. 18.4 kg
Satellite Speaker	Approx. 2.8 kg
[SS-21]	
Main Unit	Approx. 22.8 kg
A/V Tuner/Processor Unit	Approx. 7.0 kg
Subwoofer Unit	Approx. 17.8 kg
Satellite Speaker	Approx. 32.8 kg
Center Speaker	Approx. 2.9 kg
Supplied Accessories	
[SS-10/11]	IEC R6 (size AA) battery for main remote control (6)
	IEC R3 (size AAA) battery for sub remote control (2)
	AM loop antenna (1)
	Dipole antenna (1)
	Antenna adapter (1)
	DIN cable (large) (1)
	DIN cable (small) (1)
	S-Video cable (1)
	Coaxial digital cable (1)
	RCA pin plug cable (4 plugs) (1)
	RCA pin plug cable (3 plugs) (1)
	Subwoofer control cable (2)
	Speaker cable 5 m (3)
	Speaker cable 15 m (2)
	Main unit desktop stand (1)
	Front speaker desktop stand (2)
	Main unit installation fitting (2)
	Bracket A (1)
	Bracket B (1)
	M5×20 self-tapping screw (2)
	Speaker fastening screw (10)
	M5×16 self-tapping screw (6)
	M5×8 screw (6)

M3×12 screw (4)
Screw with washer (2)
Main unit template (1)
Speaker template (1)
Wall fastening template (1)

[SS-21]

IEC R6 (size AA) battery for main remote control (6)
IEC R3 (size AAA) battery for sub remote control (2)
AM loop antenna (1)
Dipole antenna (1)
Antenna adapter (1)
DIN cable (large) (1)
DIN cable (small) (1)
S-Video cable (1)
Coaxial digital cable (1)
RCA pin plug cable (4 plugs) (1)
RCA pin plug cable (3 plugs) (1)
Subwoofer control cable (2)
Cable stopper (1)
Power Cord (3)
Speaker cable 5 m (3)
Speaker cable 15 m (2)
Speaker control cable 5 m (2)
Speaker control cable 15 m (2)
Bracket A (1)
Bracket B (1)
Speaker fastening screw (2)
M5×16 self-tapping screw (6)
M5×8 screw (2)
Screw with washer (2)
Center speaker template (1)
Wall fastening template (1)
Rubber foot (4)
Cushion pad (8)

* Dimensions do not include protruding parts. Height is the panel height.
• Specifications and design are subject to change for further improvement without notice.
• Nakamichi SoundS pace, MusicBank, Harmonic Time Alignment are registered trademarks of Nakamichi Corporation.
• Manufactured under license from Dolby Laboratories, Inc.
• Dolby, Pro Logic, and the Double-D symbol are trademarks of Dolby Laboratories, Inc.
• DTS and DTS Digital Surround are trademarks of Digital Theater Systems, Inc.

Nakamichi Corporation	1-153 Suzukicho, Kodaira, Tokyo 187-8501, Japan Phone: 81 (42) 342-1111
Nakamichi America	18375 S Broadwick Street Rancho Dominguez, CA 90220 Phone: 1 (310) 631-2122 Fax: 1 (310) 631-2760
Nakamichi Asia	8/F The Grande Bldg., 398 Kwun Tong Rd., Kowloon, Hong Kong Phone: 852-2357-6690 Fax: 852 -2357-6697
Nakamichi Europe	8th Floor, Hayes Gate House, 27 Uxbridge Road Hayes, Middlesex, UB4 OJN, England Phone: 44-181-581-9191 Fax: 44-181-581-9153
Web Site	http://www.nakamichi.com

0Q06258A G-000804A Printed in Japan

5.3-5.9 LCD P.C.B. Ass'y, etc

REM P.C.B. Ass'y

SW P.C.B. Ass'y

OPT P.C.B. Ass'y
Sen P.C.B. Ass'y

Headphone P.C.B. Ass'y
(A/V Tuner Processor Unit Section)

PSW-LED P.C.B. Ass'y
(A/V Tuner Processor Unit Section)

LED P.C.B. Ass'y

LCD P.C.B. Ass'y

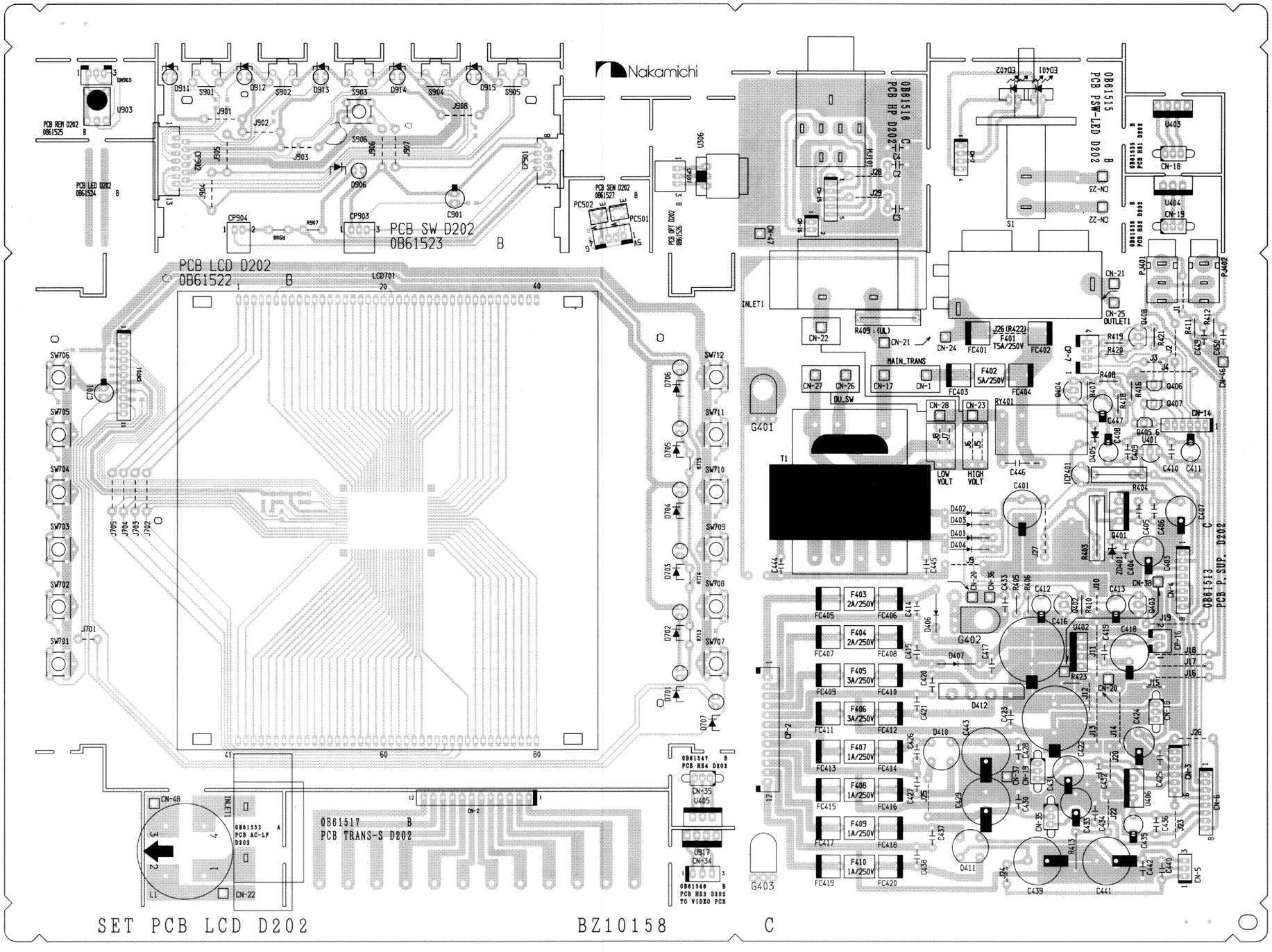

HS2 P.C.B. Ass'y/HS1 P.C.B. Ass'y
(A/V Tuner Processor Unit Section)

P. Supply P.C.B. Ass'y (A/V Tuner Processor Unit Section)

AC LF P.C.B. Ass'y
(A/V Tuner Processor Unit Section)

Trans-S P.C.B. Ass'y
(A/V Tuner Processor Unit Section)

HS3 P.C.B. Ass'y/HS4 P.C.B. Ass'y (A/V Tuner Processor Unit Section)

Fig. 5.3.1 Component Side

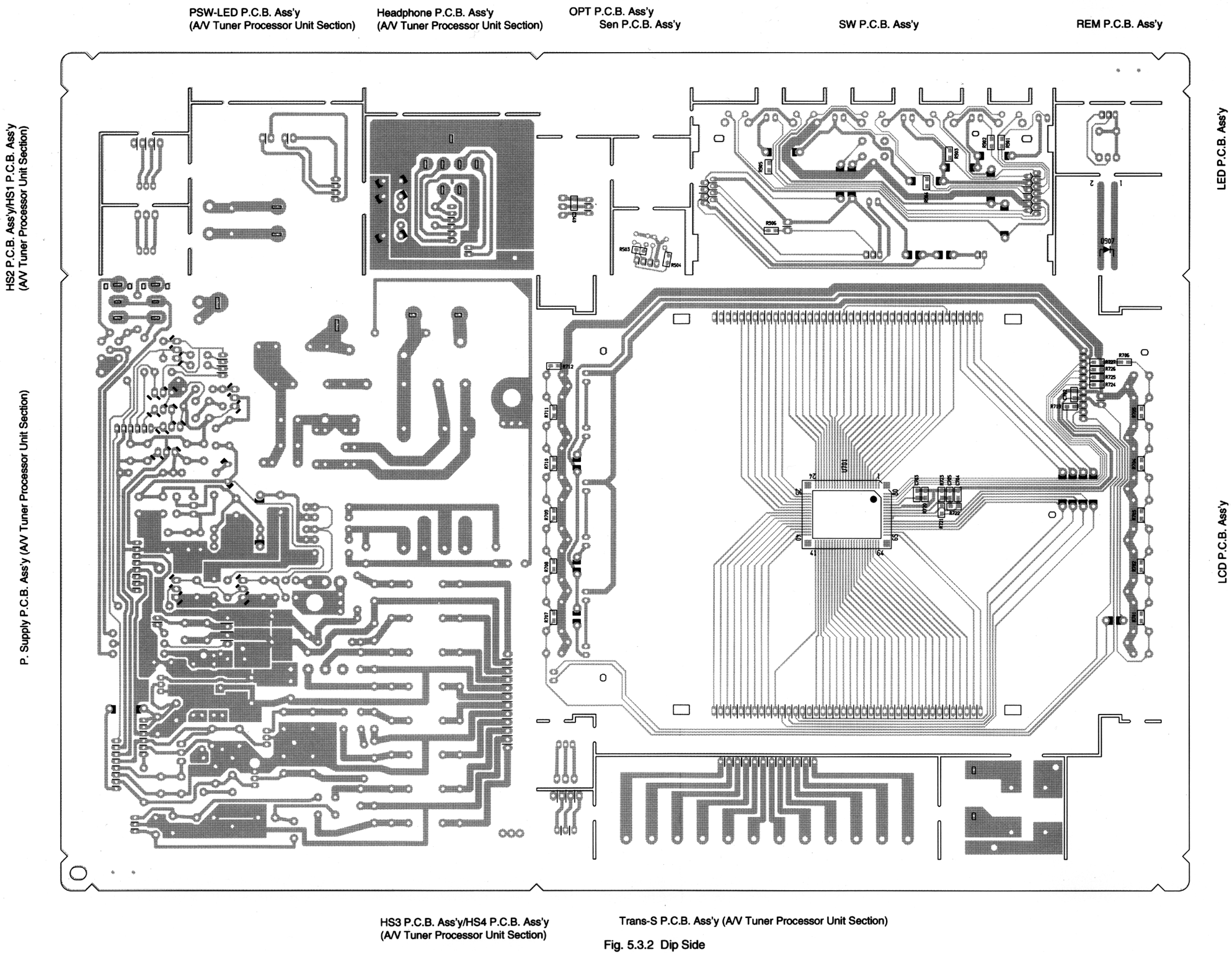

Fig. 5.3.2 Dip Side

2.11. Video P.C.B. Ass'y

Video P.C.B. Ass'y

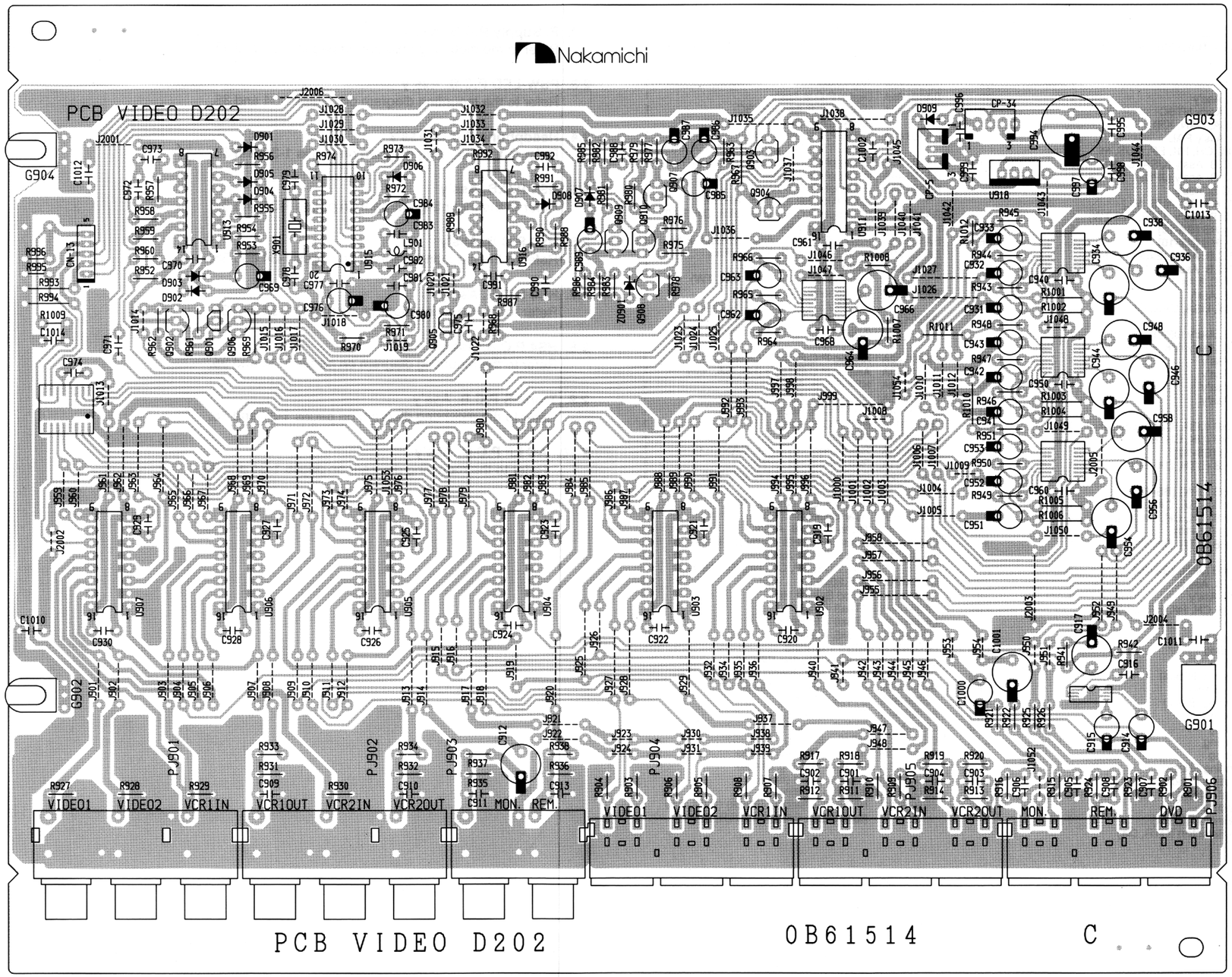

Fig. 2.1.1 Component Side

Video P.C.B. Ass'y

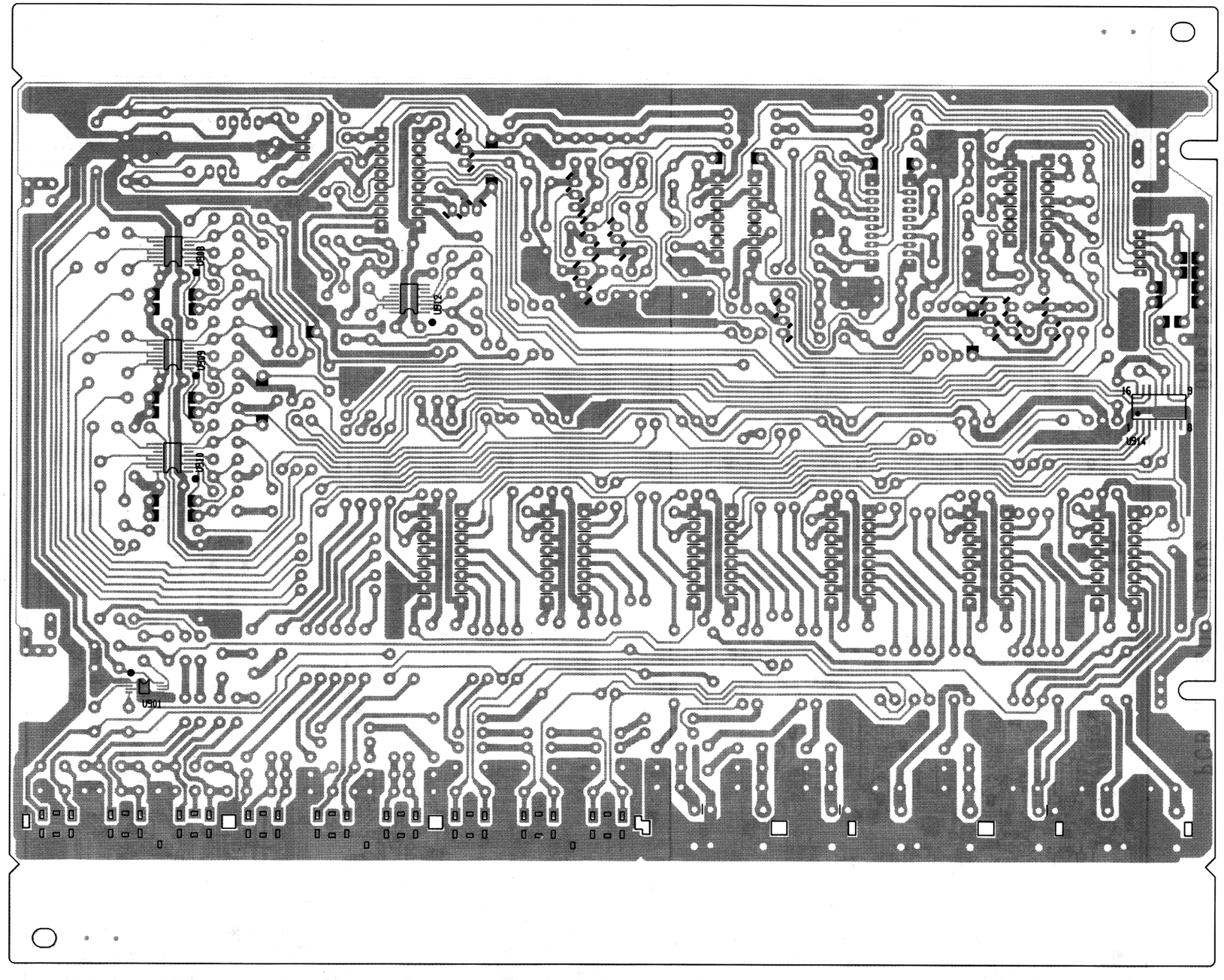

Fig. 2.1.2 Dip Side

2.12. Analog P.C.B. Ass'y

Analog P.C.B. Ass'y

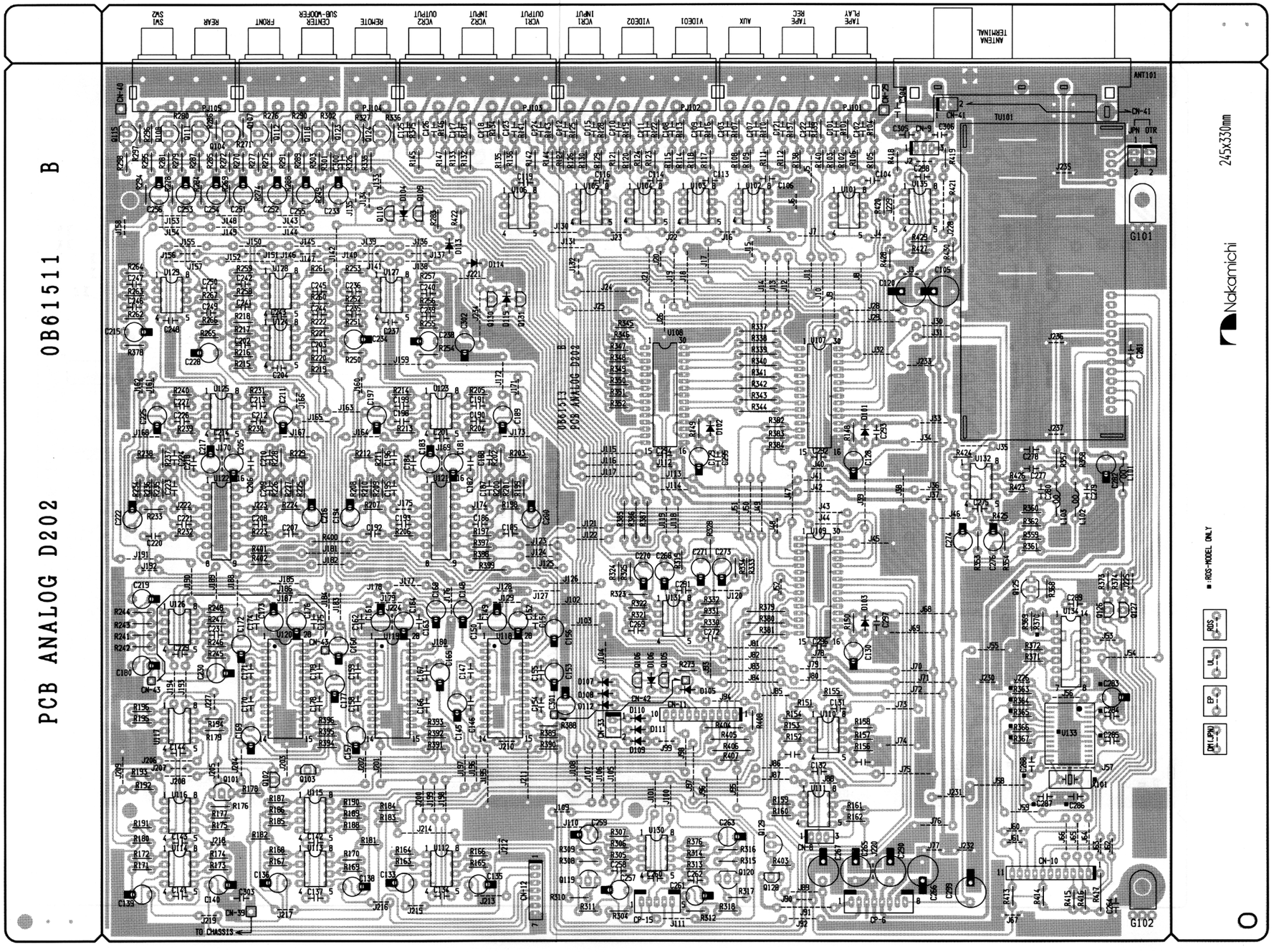

Fig. 2.2.1 Component Side

Analog P.C.B. Ass'y

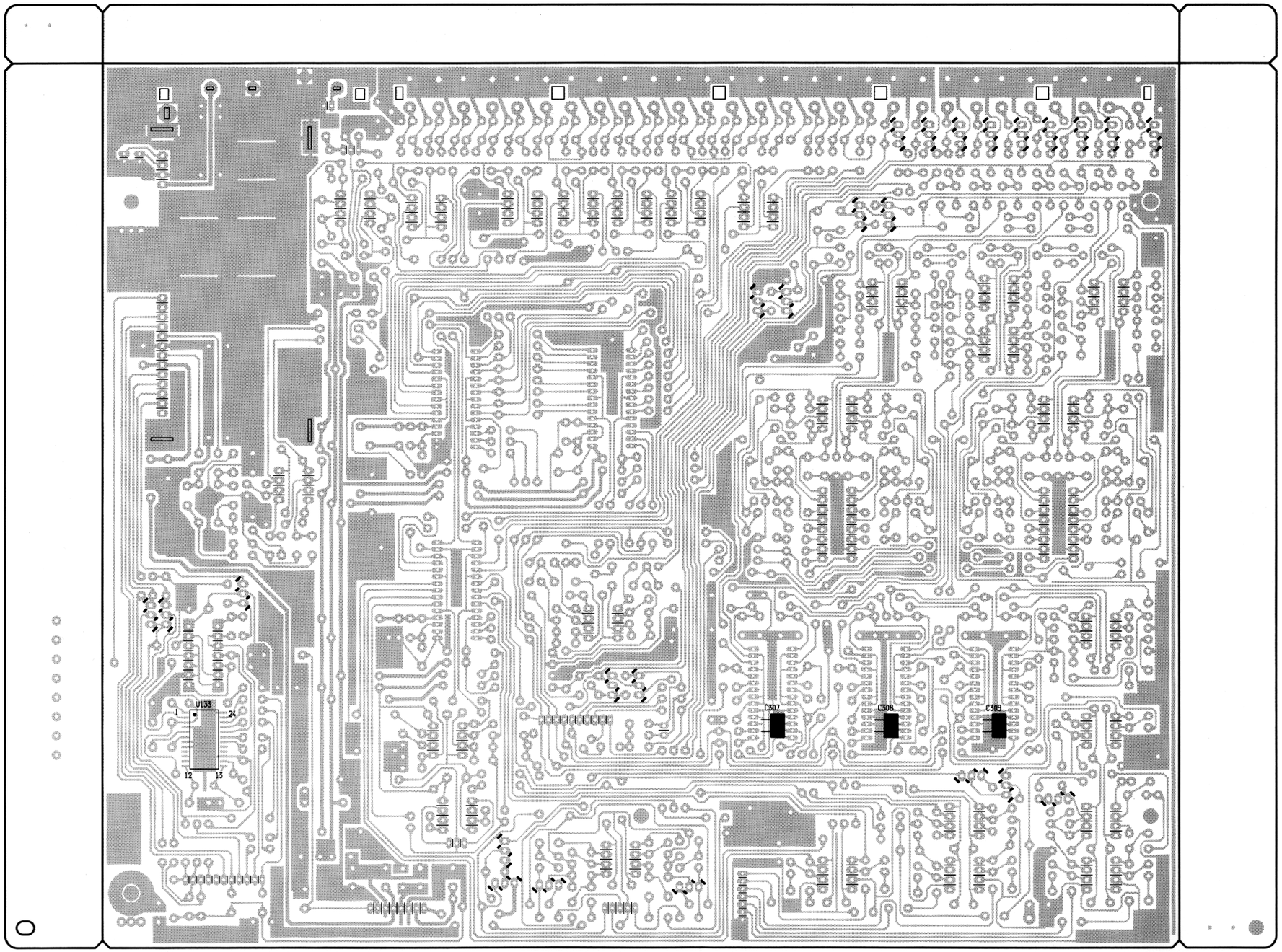

Fig. 2.2.2 Dip Side

3. MOUNTING DIAGRAMS AND PARTS LIST

(+) Polarity of Capacitor (−)

AMP P.C.B. 4CH/3CH Ass'y

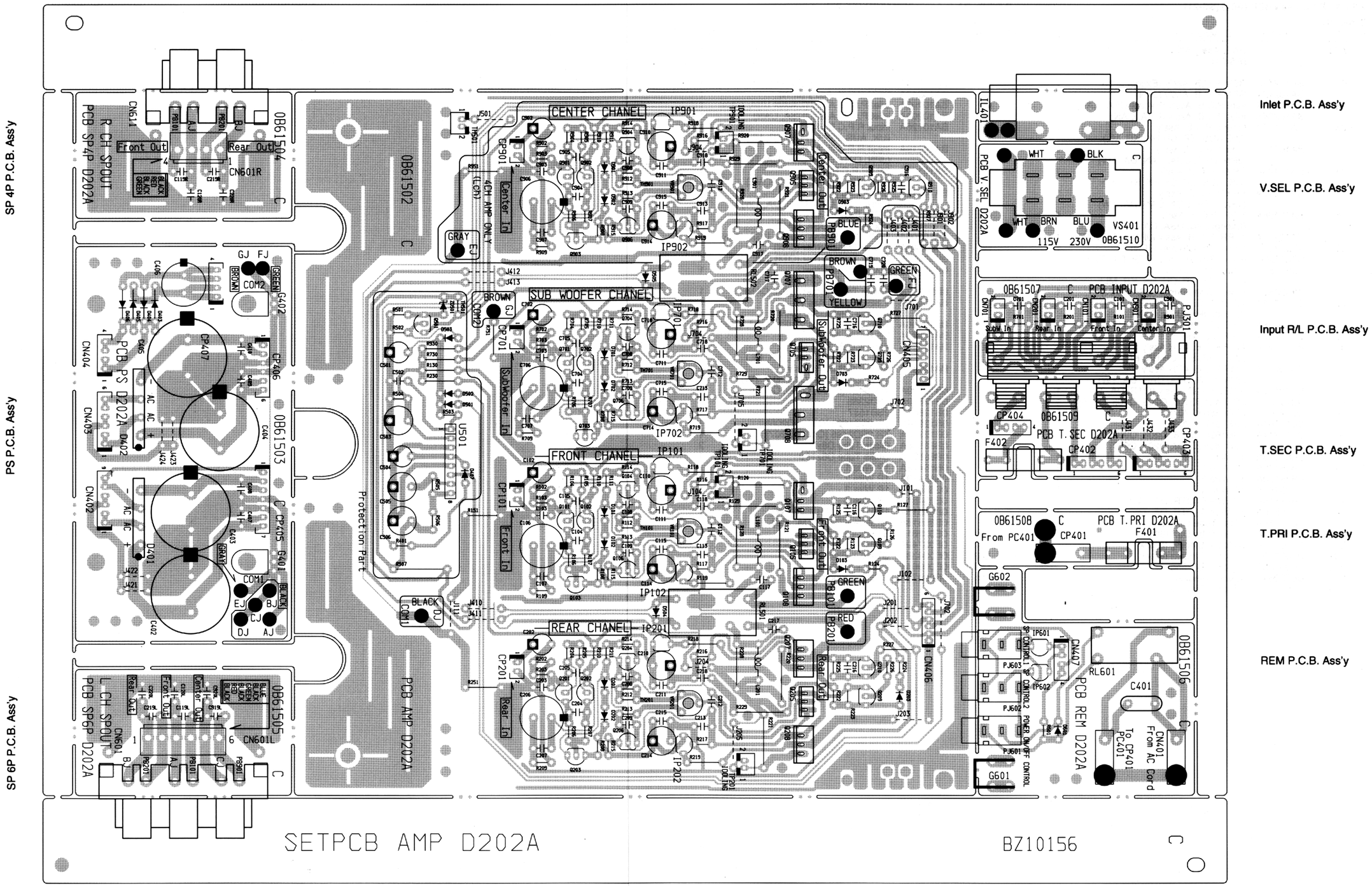

Fig. 3 Component Side

3. MOUNTING DIAGRAMS AND PARTS LIST

(+) Polarity of Capacitor (−)

SP Cont. P.C.B. Ass'y

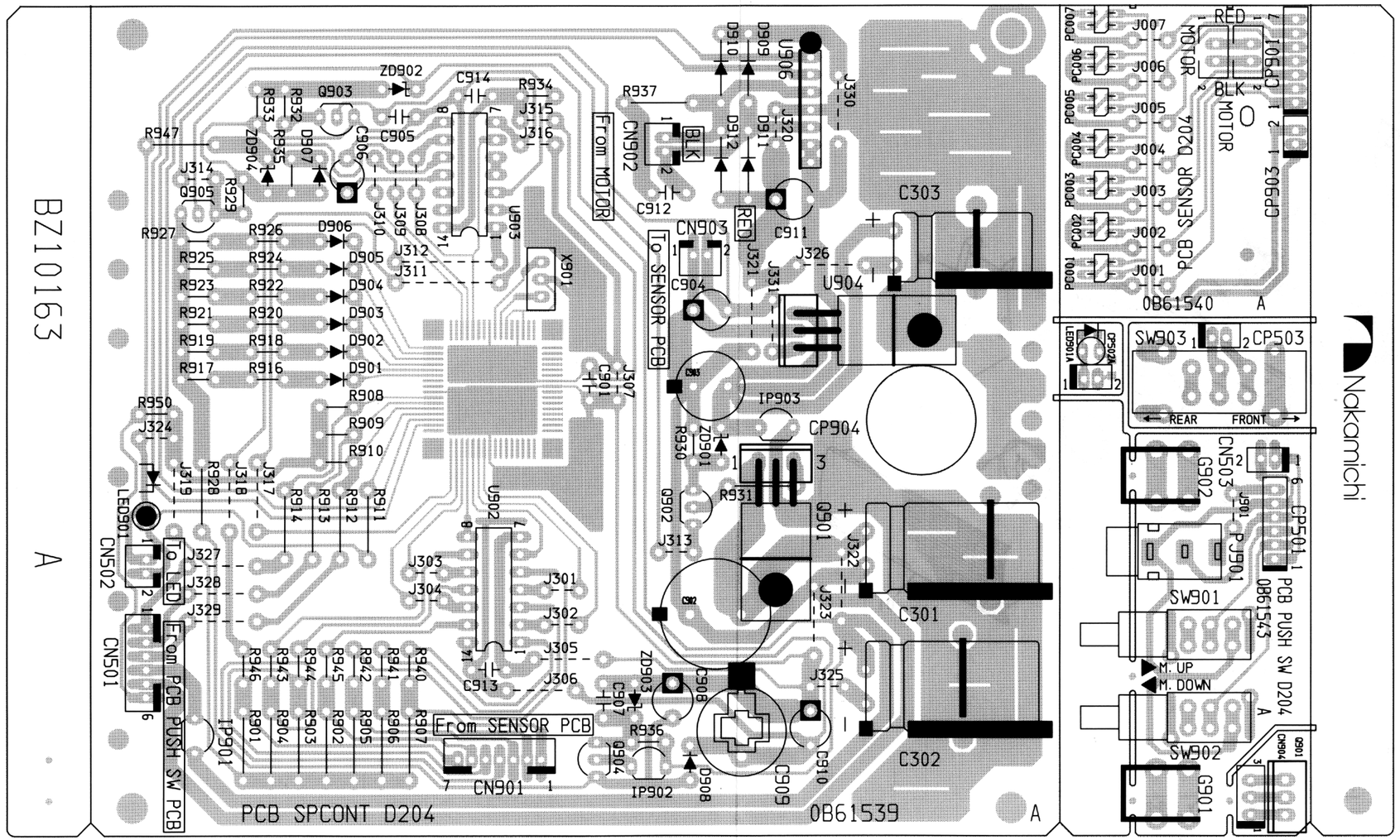

Sensor P.C.B. Ass'y

SP LED P.C.B. Ass'y

Slide S P.C.B. Ass'y

Push S P.C.B. Ass'y

TR P.C.B. Ass'y

Fig. 3.1 Component Side

SP Cont. P.C.B. Ass'y

Sensor P.C.B. Ass'y

SP LED P.C.B. Ass'y

Slide S P.C.B. Ass'y

Push S P.C.B. Ass'y

TR P.C.B. Ass'y

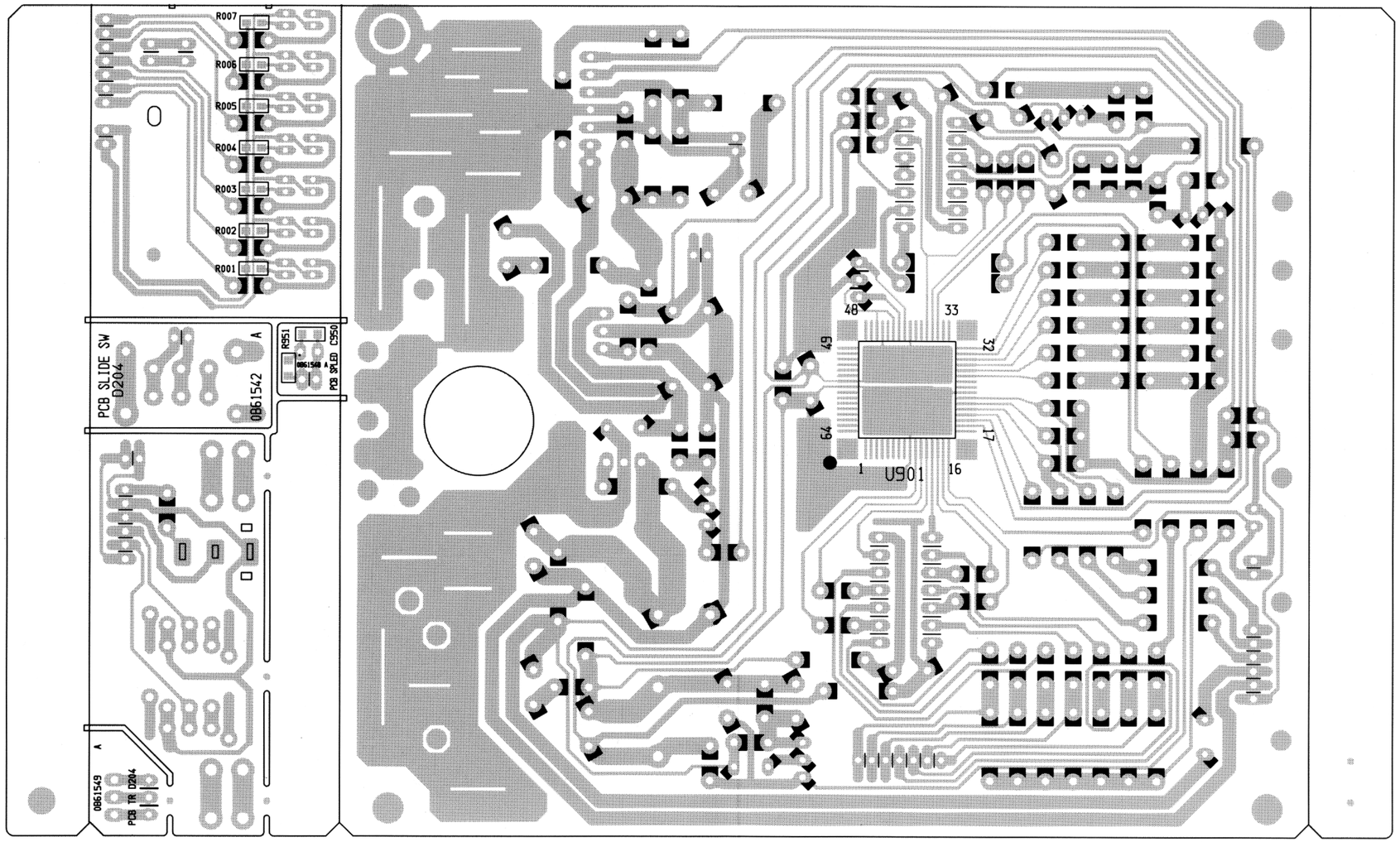

Fig. 3.2 Dip Side

SS-10/11/21

Main Unit (1/3) - Main Section

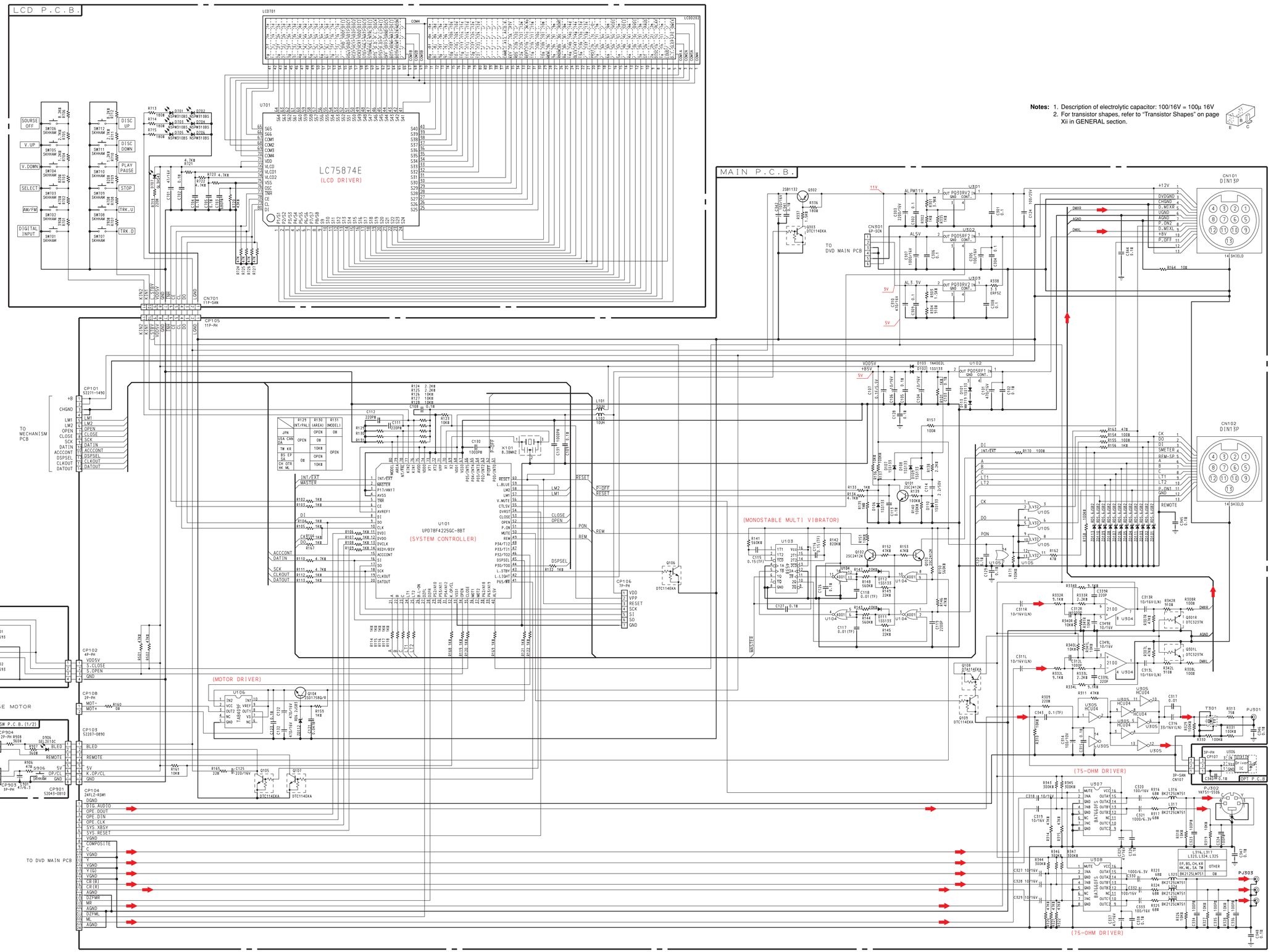

Notes: 1. Description of electrolytic capacitor: 100/16V = 100μ 16V
2. For transistor shapes, refer to "Transistor Shapes" on page Xii in GENERAL section.

SS-10/11/21

Main Unit (2/3)
Mechanism Control Section
(C3M1: New)

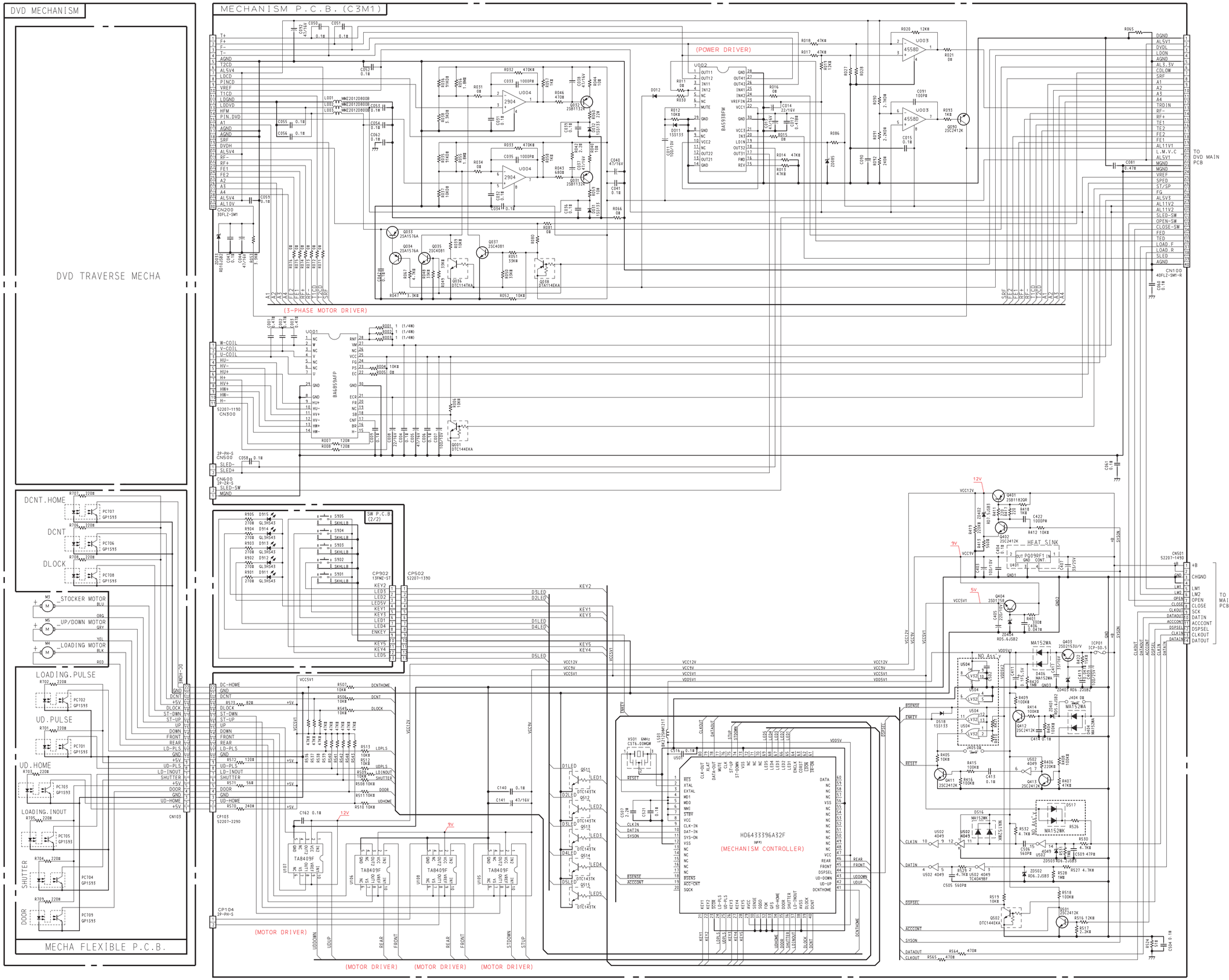

Notes: 1. Description of electrolytic capacitor: 100/16V = 100μ 16V
2. For transistor shapes, refer to "Transistor Shapes" on page Xii in GENERAL section.

#:CHIP PARTS

Main Unit (3/3)
Mechanism Control Section
(M3C1: Current)

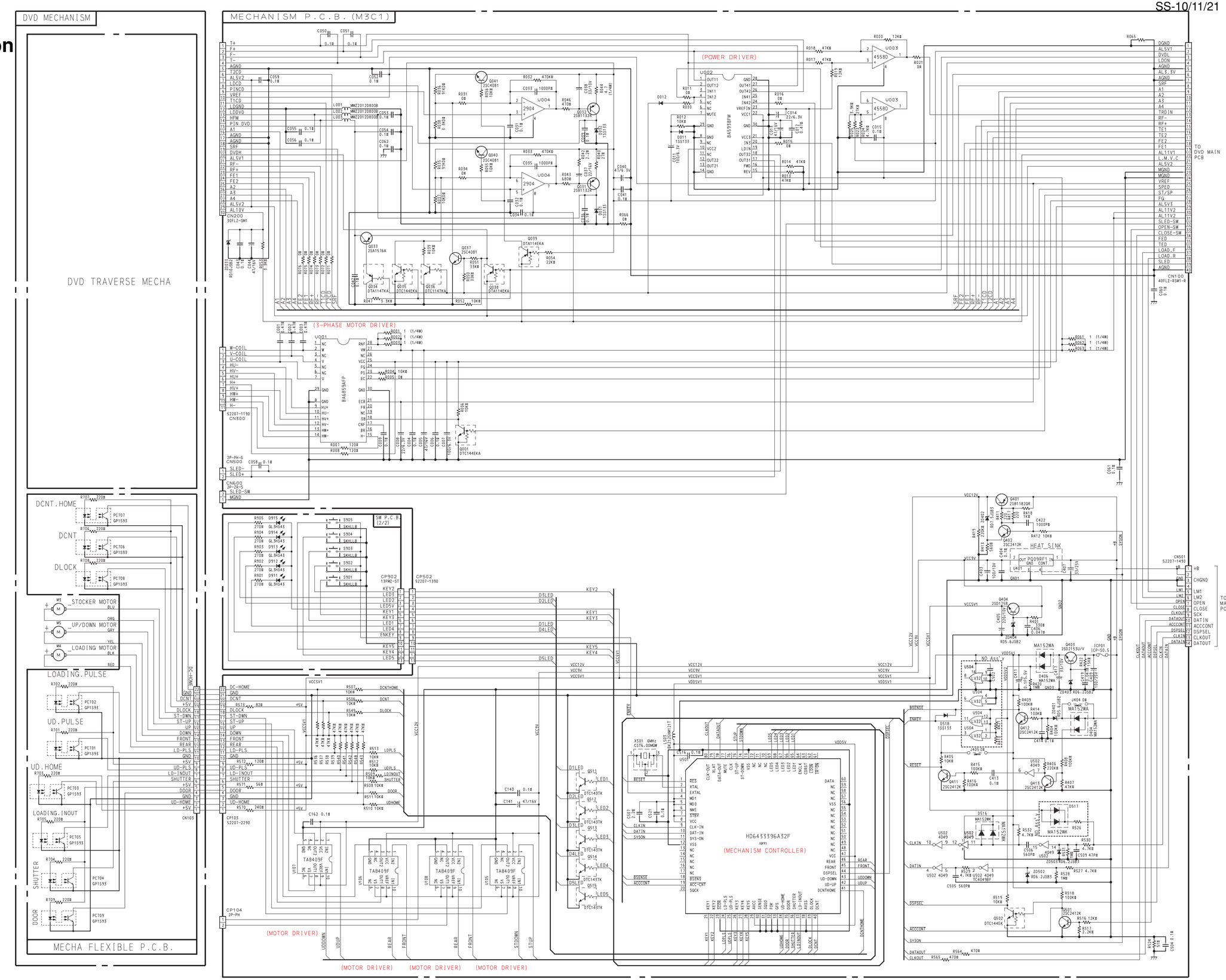

Notes: 1. Description of electrolytic capacitor: 100/16V = 100μ 16V
2. For transistor shapes, refer to "Transistor Shapes" on page Xii in GENERAL section.

#:CHIP PARTS

AV Tuner/Processor Unit (1/4)
Video Section

SS-10/11/21

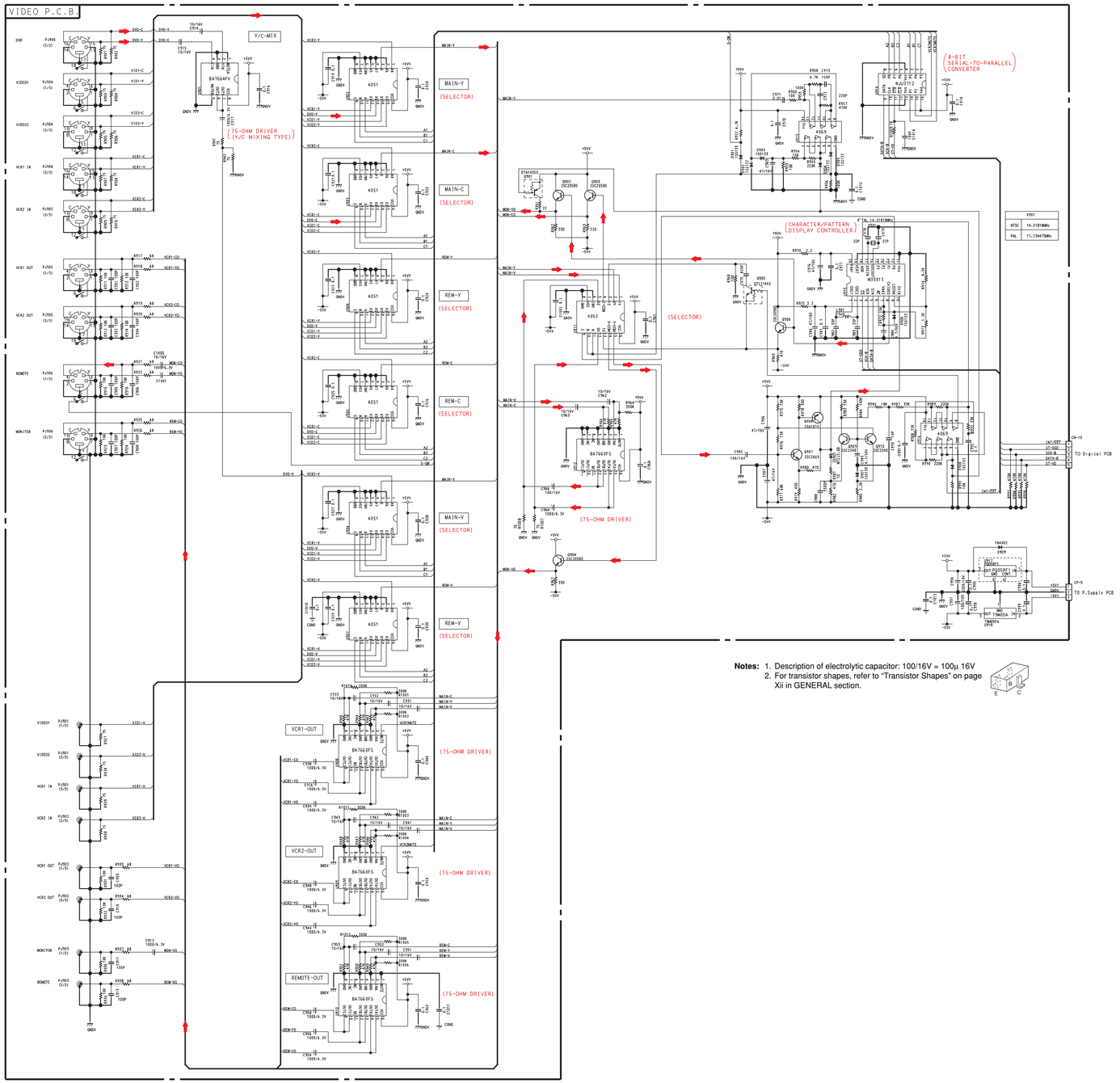

Notes: 1. Description of electrolytic capacitor: 100/16V = 100µ 16V
2. For transistor shapes, refer to "Transistor Shapes" on page Xii in GENERAL section.

A/V TUNER/PROCESSOR(SS-10/11/21)

SS-10/11/21

A/V Tuner/Processor Unit (2/4) — Digital Section

SS-10/11/21

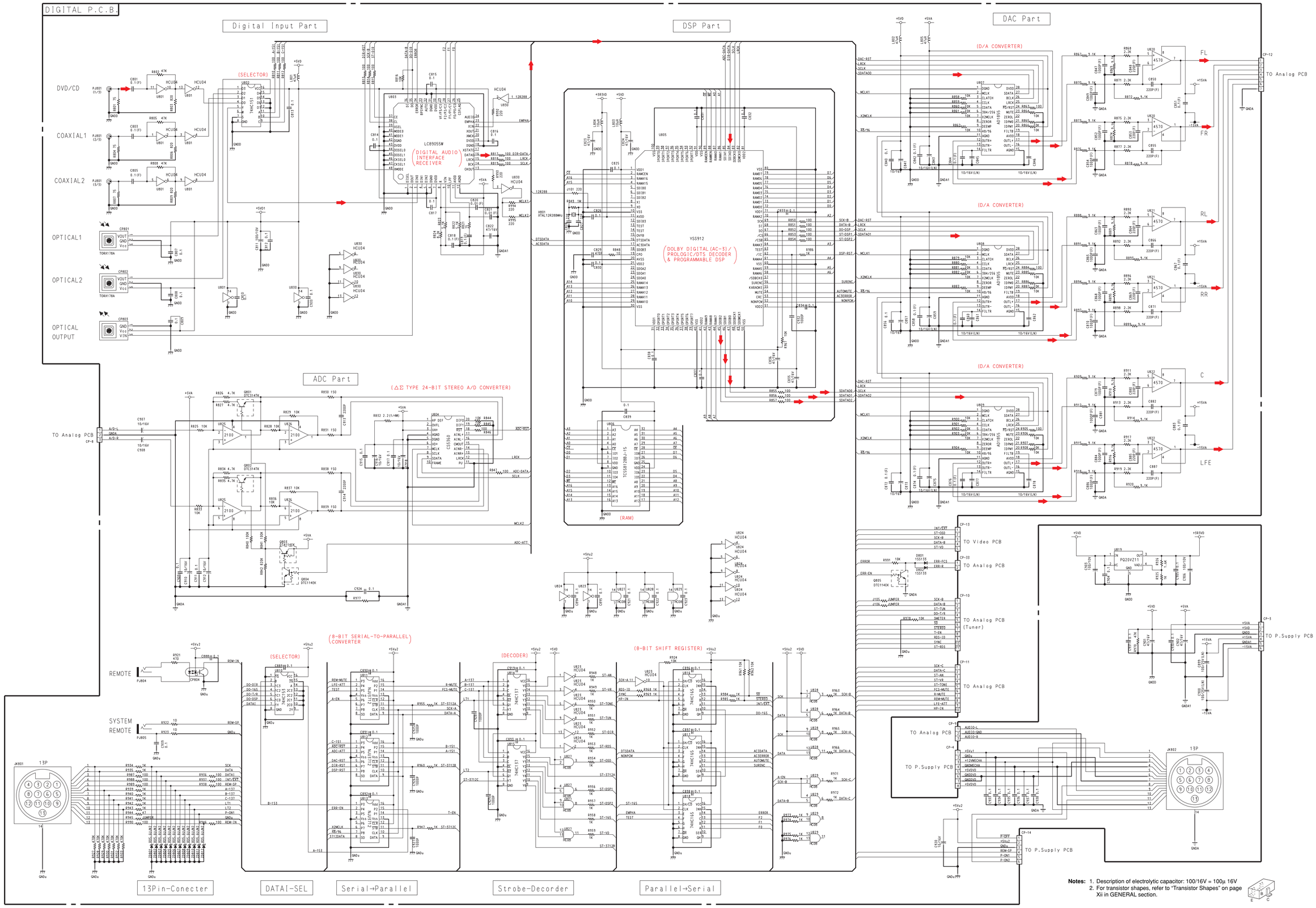

Notes: 1. Description of electrolytic capacitor: 100/16V = 100μ 16V
2. For transistor shapes, refer to "Transistor Shapes" on page XII in GENERAL section.

A/V Tuner/Processor Unit (3/4) — Analog Section

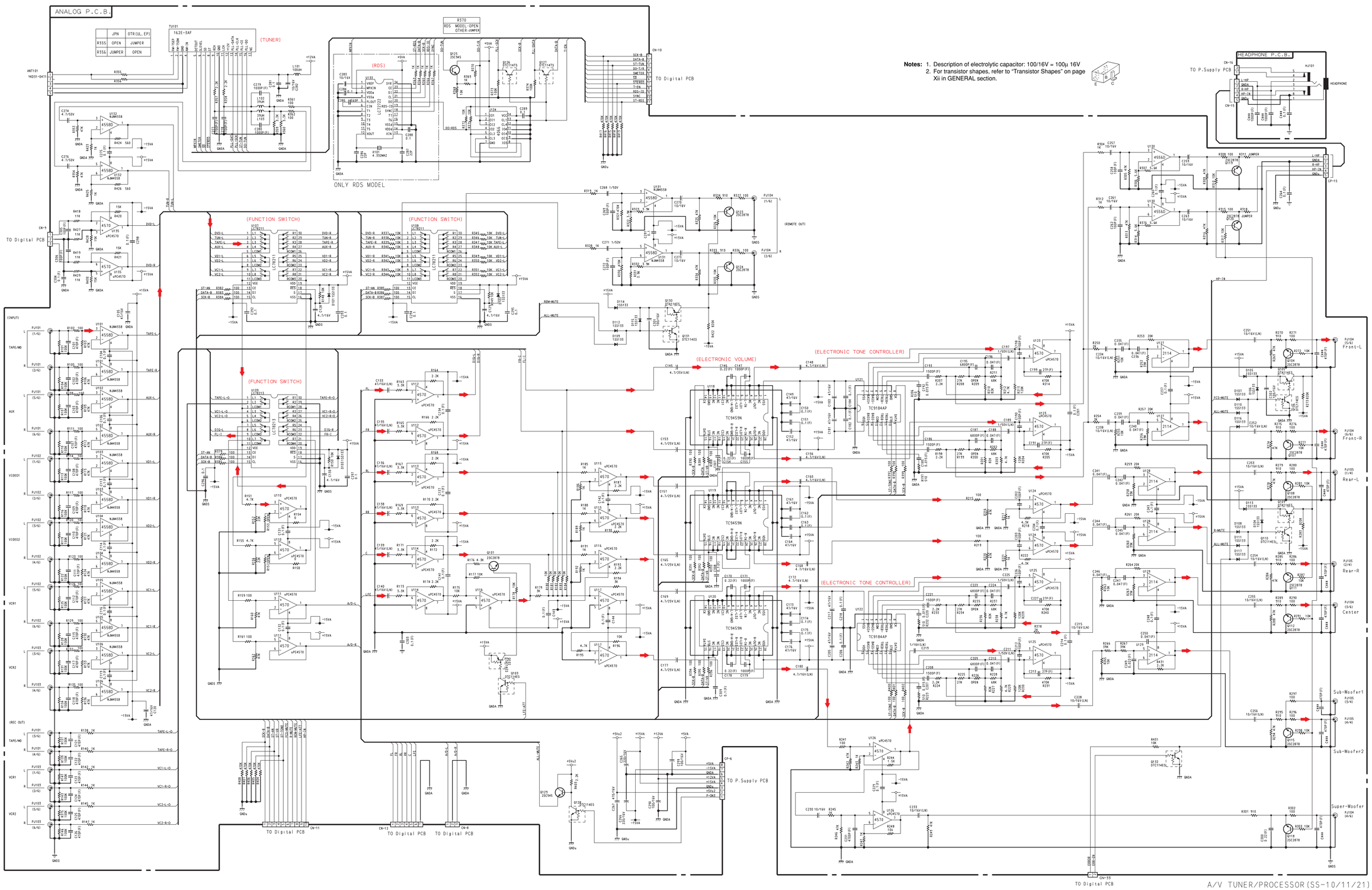

	JPN	OTR(UL,EP)
R355	OPEN	JUMPER
R356	JUMPER	OPEN

Notes: 1. Description of electrolytic capacitor: 100/16V = 100μ 16V
2. For transistor shapes, refer to "Transistor Shapes" on page Xii in GENERAL section.

A/V Tuner/Processor Unit (4/4) — Power Supply Section

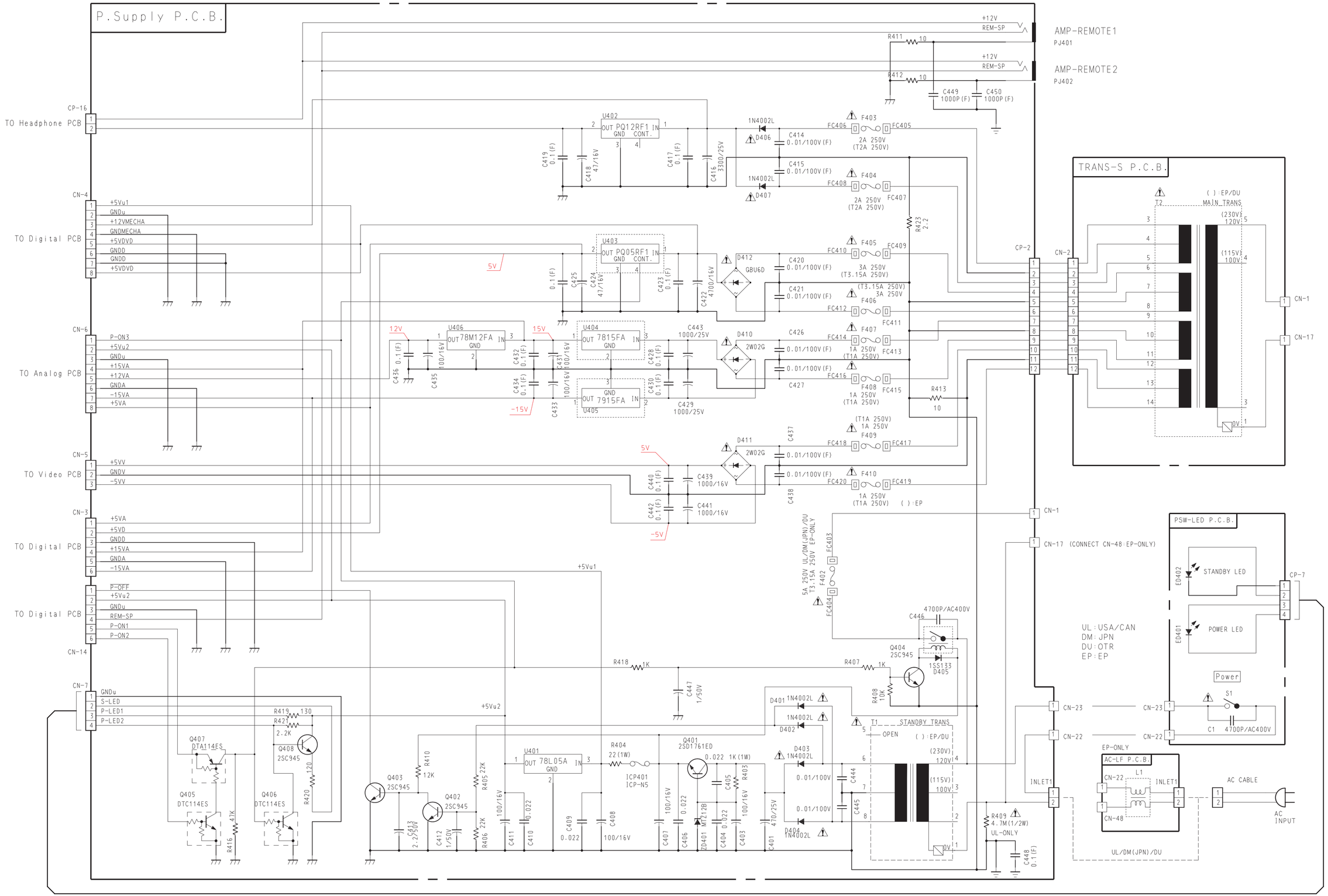

* WARNING:

Parts marked with this symbol ⚠ have critical characteristics.
Use ONLY replacement parts recommended by the manufacturer.

SS-10/11/21

Subwoofer

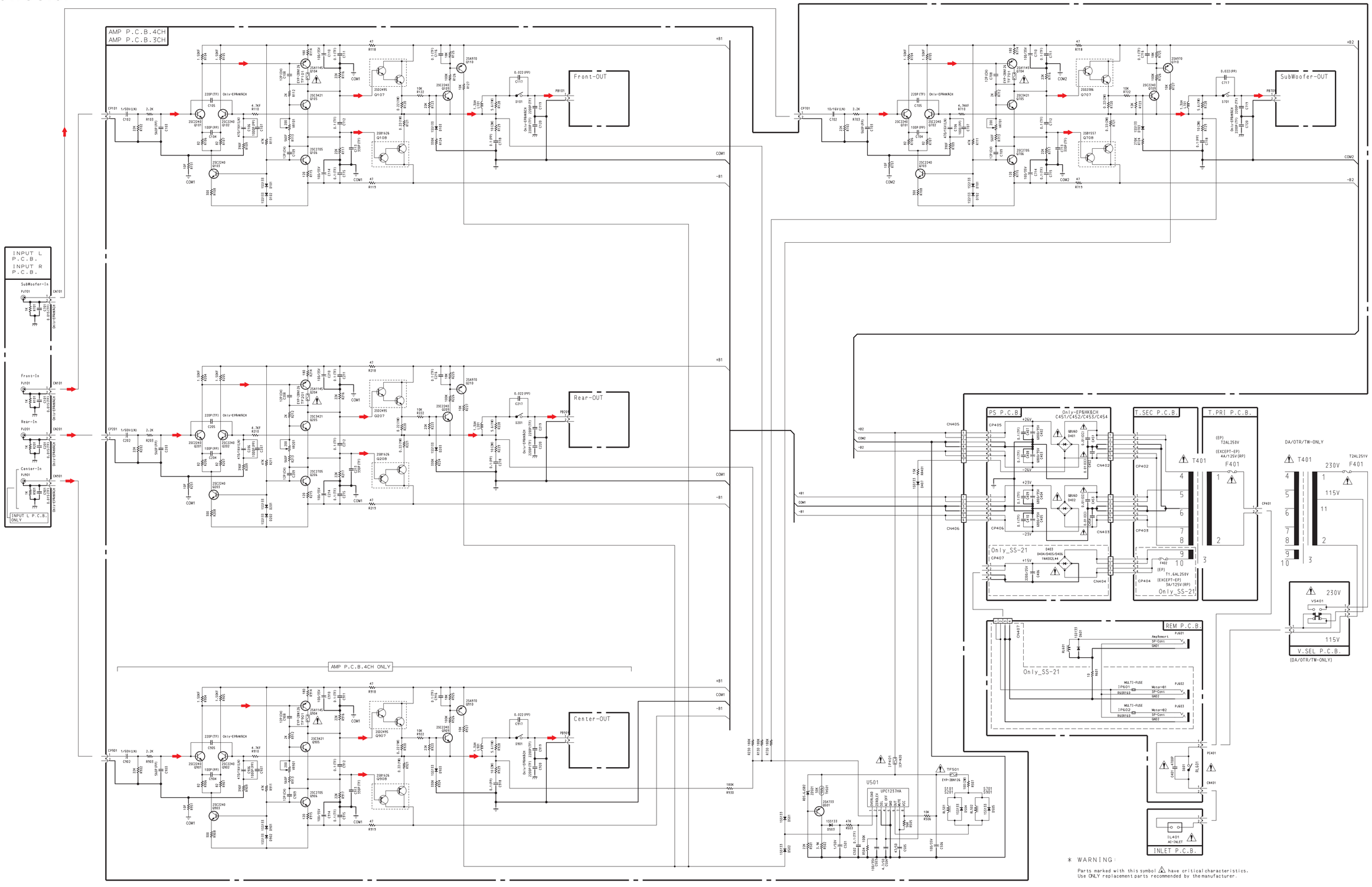

SUBWOOFER (SS-10/11/21)

Notes: 1. Description of electrolytic capacitor: 100/16V = 100μ 16V
2. For transistor shapes, refer to "Transistor Shapes" on page Xii in GENERAL section.

Floor Speaker Control Section [SS-21 Only]

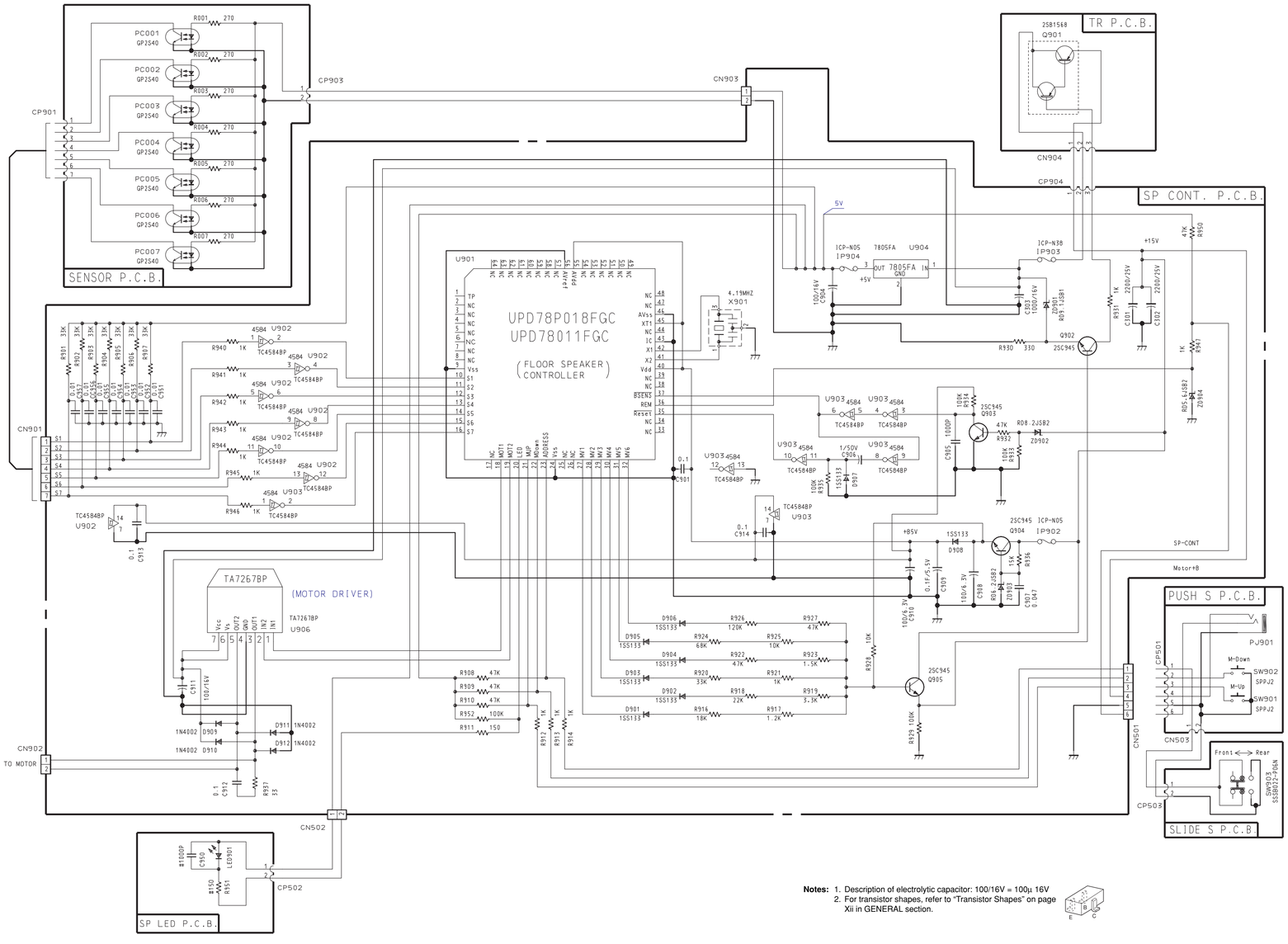

Notes: 1. Description of electrolytic capacitor: 100/16V = 100μ 16V
2. For transistor shapes, refer to "Transistor Shapes" on page Xii in GENERAL section.

FLOOR SPEAKER(SS-21)