EQUALIZER

EQ - I

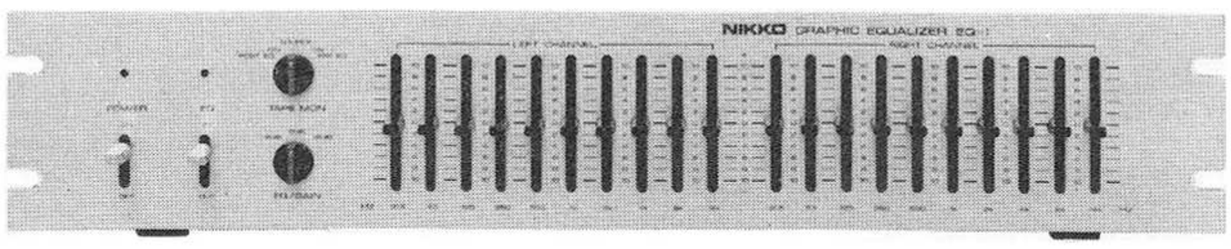

SERVICE MANUAL

TYPE AND VOLTAGE

W-TYPE UL and CSA type	120V AC
E-TYPE NK-STD type	220/240V AC
N-TYPE DEMKO and SEMKO type	
D-TYPE DIN type	

NIKKO

www.hifiengine.com

SCHEMATIC DIAGRAM

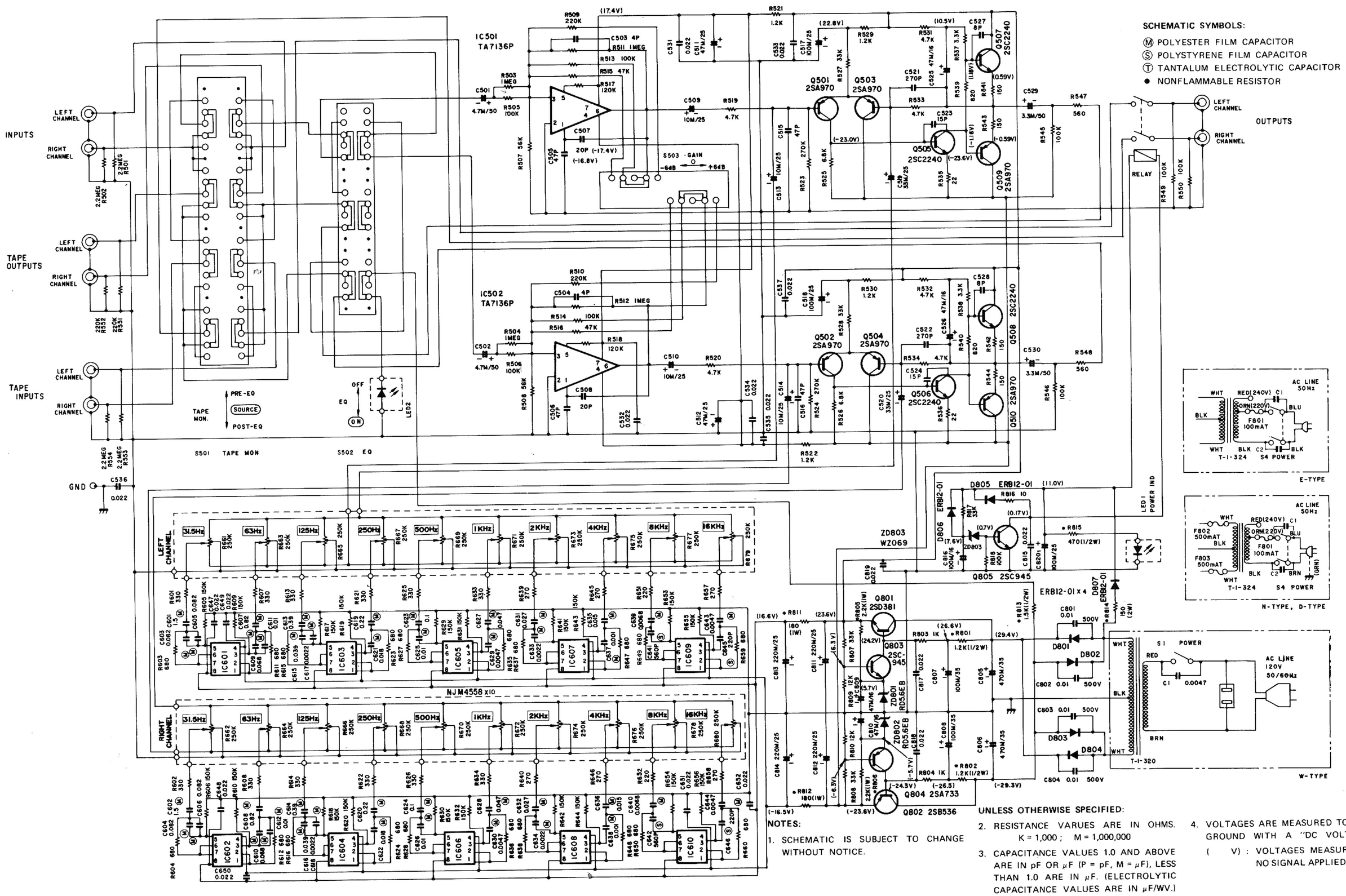

NOTES:

1. SCHEMATIC IS SUBJECT TO CHANGE WITHOUT NOTICE.

UNLESS OTHERWISE SPECIFIED:

2. RESISTANCE VARUES ARE IN OHMS. K = 1,000 ; M = 1,000,000
3. CAPACITANCE VALUES 1.0 AND ABOVE ARE IN pF OR μF (P = pF, M = μF), LESS THAN 1.0 ARE IN μF. (ELECTROLYTIC CAPACITANCE VALUES ARE IN μF/WV.)
4. VOLTAGES ARE MEASURED TO CHASSIS GROUND WITH A "DC VOLTMETER"

(V) : VOLTAGES MEASURED WITH NO SIGNAL APPLIED.