NIKKO RECEIVER

NR-520

AM/FM STEREO RECEIVER

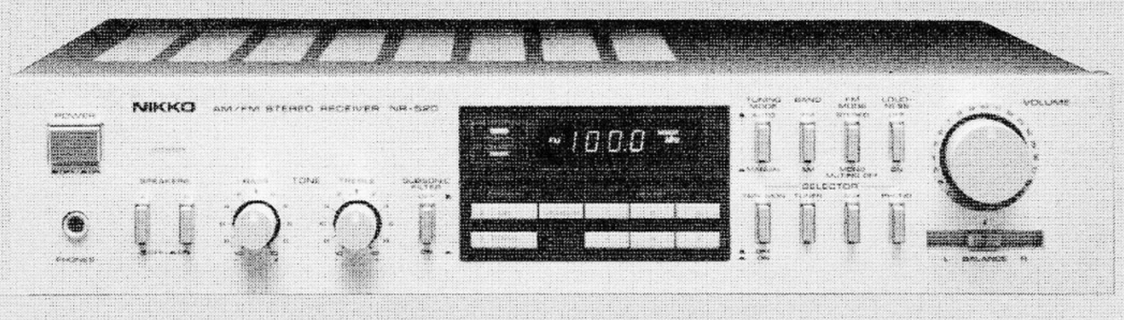

TYPE AND VOLTAGE

W-TYPE:	UL & CSA type	120V AC
E-TYPE:	NK-STD type	220V AC

SERVICE MANUAL

CONTENTS

SPECIFICATIONS 1, 2
BLOCK DIAGRAM 2
DISASSEMBLY 3
ALIGNMENT ..... 4 ~ 8
PARTS LOCATION 9
P. W. BOARD (1) 10, 11
P. W. BOARD (2) 12, 13
PARTS LIST ..... 14 ~ 17
SEMICONDUCTOR DATA,
TRANSISTORS 18
FIELD EFFECT TRANSISTOR 18
DIODE, LED'S 18
ZENER DIODES 18
INTEGRATED CIRCUITS ..... 19 ~ 22

www.hifiengine.com

SPECIFICATIONS

FM TUNER SECTION

Usable Sensitivity: . . . . . better than 16.8 dBf (4 μV)
50 dB Quieting Sensitivity:
. . . . . better than 19.8 dBf (5.62 μV)
Signal to Noise Ratio,
MONO: . . . . . better than 60 dB
STEREO: . . . . . better than 58 dB
Total Harmonic Distortion at 1000 Hz,
MONO: . . . . . no more than 0.3 %
STEREO: . . . . . no more than 0.8 %
Alternate Channel Selectivity: . . . . . better than 50 dB
Spurious Response Rejection: . . . . . better than 80 dB
Image Frequency Rejection: . . . . . better than 37 dB
IF Rejection: . . . . . better than 70 dB
AM Rejection: . . . . . better than 40 dB
Capture Ratio: . . . . . better than 3 dB

Stereo Separation,
100 Hz: . . . . . better than 30 dB
1000 Hz: . . . . . better than 35 dB
10000 Hz: . . . . . better than 20 dB
Subcarrier Suppression: . . . . . better than 38 dB
Muting Sensitivity: . . . . . 35 dBf ±6 dB
Tuning Frequency Range,
U. S. A. & Canada model: . . . . 87.9 – 107.9 MHz
Europe & U. K. model: . . . . . 87.5 – 108.0 MHz
Tuning Channel Step,
U. S. A. & Canada model: . . . . . 200 kHz
Europe & U. K. model: . . . . . 50 kHz
Antenna Impedance: . . . . . 300 ohms balanced &
75 ohms unbalanced
Output Level: . . . . . 500 mV ±3 dB

AM TUNER SECTION

Usable Sensitivity: . . . . . better than 60 dB/m
Signal to Noise Ratio: . . . . . better than 35 dB
Image Frequency Ratio,
1000 kHz: . . . . . better than 35 dB
IF Rejection: . . . . . better than 25 dB
Selectivity (±10 kHz): . . . . . better than 25 dB
Total Harmonic Distortion: . . . . . no more than 3 %
Spurious Response Rejection: . . . . . better than 35 dB

Tuning Frequency Range,
U. S. A. & Canada model: . . . . . 530 – 1620 kHz
Europe & U. K. model: . . . . . 522 – 1611 kHz
Tuning Channel Step,
U. S. A. & Canada model: . . . . . 10 kHz
Europe & U. K. model: . . . . . 9 kHz
Output Level . . . . . 120 mV ±3 dB

AUDIO AMPLIFIER SECTION

Continuous Power Output per channel,
20 – 20000 Hz (8 ohms): . . . . more than 30 Watts
1000 Hz (8 ohms): . . . . . more than 35 Watts
10000 Hz (4 ohms): . . . . . more than 40 Watts
Total Harmonic Distortion, 8 ohms
at Continuous Power Output: . no more than 0.05 %
at 1 Watt Power Output: . . . . no more than 0.09 %
I. M. Distortion, 8 ohms
at Continuous Power Output: . no more than 0.05 %
IHF Power Bandwidth, 8 ohms: . . . . . 20 – 30000 Hz
Damping Factor at 1000 Hz, 8 ohms: . . . . more than 30
Frequency Response,
PHONO to TAPE OUT (RIAA equalization):
. . . . . 30 – 15000 Hz ± 2 dB
AUX, TAPE IN to SPEAKER TERMINAL
. . . . . 20 – 20000 Hz +2, –3 dB
Input Sensitivity for Continuous Power Output,
PHONO: . . . . . 2.5 mV ± 2 dB
AUX, TAPE IN, ... 150 mV ± 2 dB

PHONO Maximum Input Capability at 1000 Hz,
PHONO: . . . . . more than 60 mV
Output Level at Continuous Power Output
TAPE OUT (input: PHONO): . . . . 150 mV ± 2 dB
Tone Controls,
BASS (70 Hz) Boost: . . . . . +10 dB ± 2 dB
Cut: . . . . . –10 dB ± 2 dB
TREBLE (10000 Hz) Boost: . . . . . +9 dB ± 2 dB
Cut: . . . . . –8 dB ± 2 dB
Loudness Control (Volume Control set at –30 dB position)
70 Hz: . . . . . +8 dB ± 2 dB
Subsonic Filter, at 15 Hz: . . . . . –3 dB ± 2 dB
Signal to Noise Ratio with IHF-A Network,
PHONO: . . . . . better than 70 dB
AUX, TAPE IN: . . . . . better than 90 dB
Output Muting Delay Time: . . . . . 2 + 2, –1 sec.
Midpoint Voltage: . . . . . 0 ± 150 mV

www.hifiengine.com

GENERAL

Power Requirement,
U. S. A. & Canada model: . . . . . AC 120 V/60 Hz
European model: . . . . . AC 220 V/50 Hz
Power Consumption: . . . . .180 Watts (by CSA standard)
280 Watts (by IEC standard)

*Specifications are subject to change without notice.

Dimensions without knobs and feet,
Width: . . . . . 440 mm, 17-1/4"
Height: . . . . . 96 mm, 3-3/4"
Depth: . . . . . 307 mm, 12"
Weight without package: . . . . . 6.2 kg, 13.7 lbs

BLOCK DIAGRAM

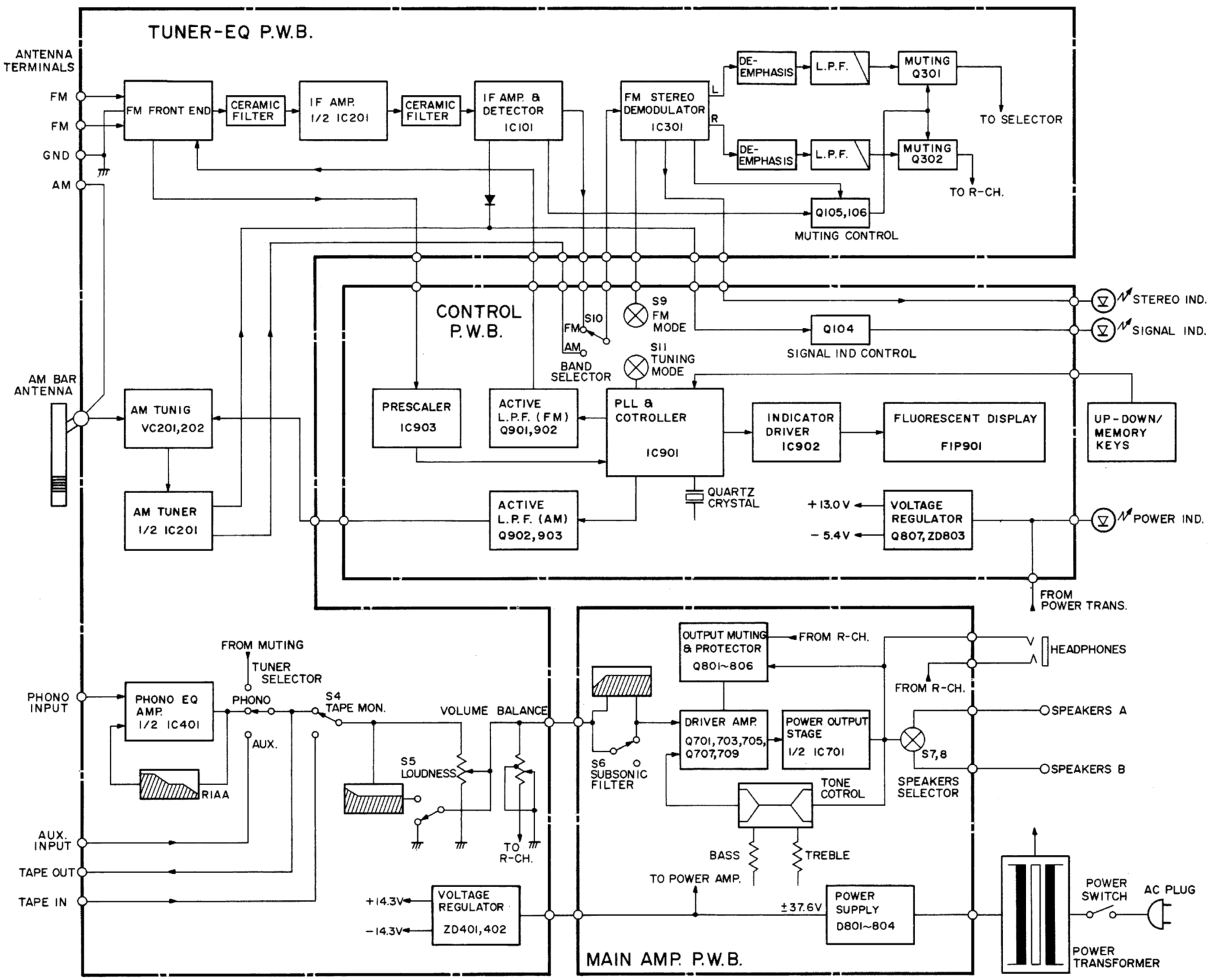

Figure 1

www.hifiengine.com

DISASSEMBLY

CABINET COVER REMOVAL

a. Remove four screws from both sides of the metal cover.
b. Remove two tapping screws from the rear of the metal cover.
c. Lift the cover away from the unit.

BOTTOM PLATE REMOVAL

a. Remove nine tapping screws (#1 ~ #9) and two transformer screws (#10 and #11) from the bottom of the unit as shown in Photo 1.
b. Lift the bottom plate away from the unit.

FRONT PANEL REMOVAL

a. Remove the bottom plate.
b. Remove the tapping screws (#12 and #13) from the bottom of the unit as shown in Photo 1.
c. Remove two tapping screws (#16 and #17) from the top of the unit as shown in Photo 2.
d. Remove the front panel away from the unit by pulling it forward.

POWER TRANSFORMER REMOVAL

a. Remove the bottom plate.
b. Disconnect all the power transformer cables.
c. Remove two screws (#14 and #15) from the bottom of the unit as shown in Photo 1.
d. Lift the power transformer away from the unit.

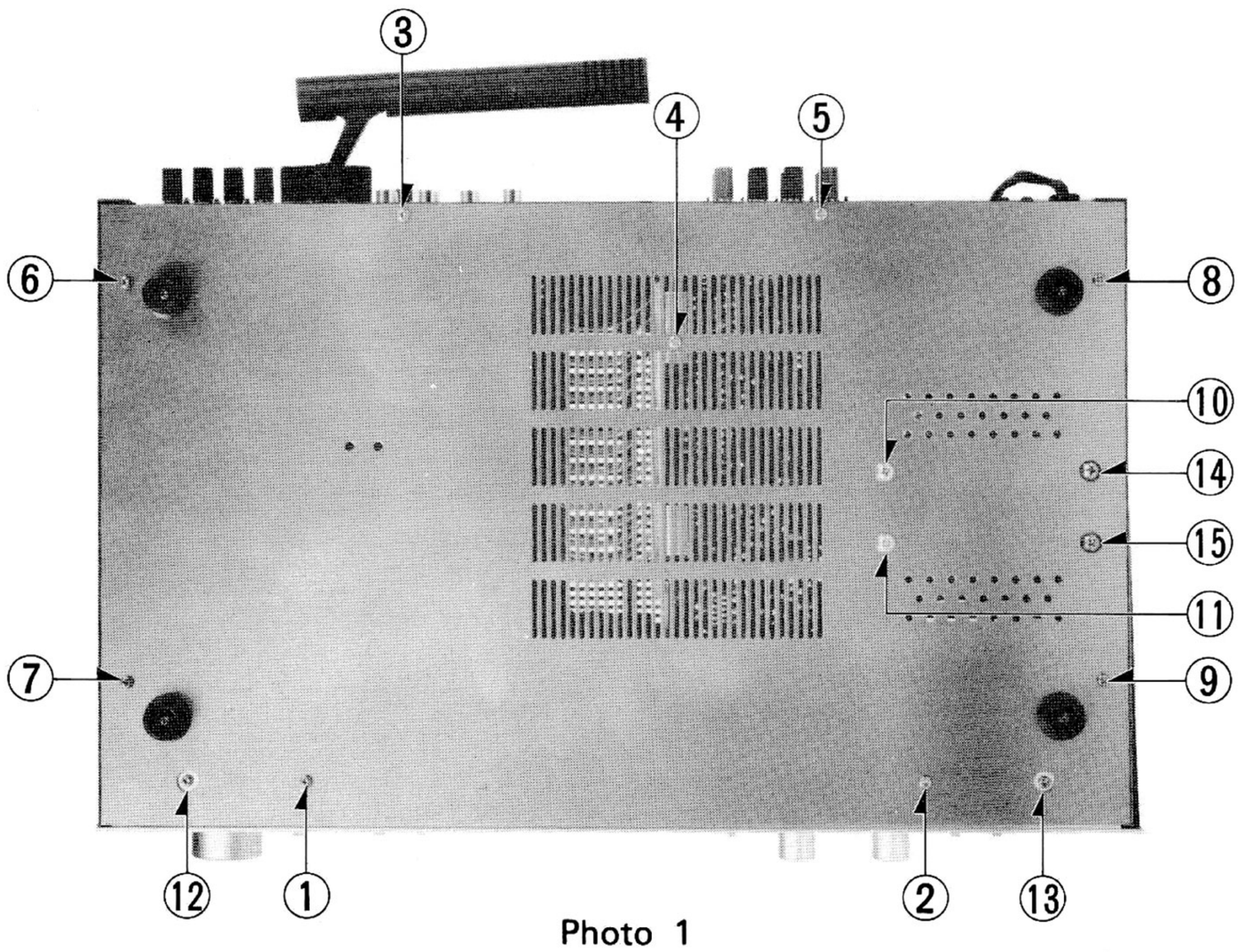

Photo 1

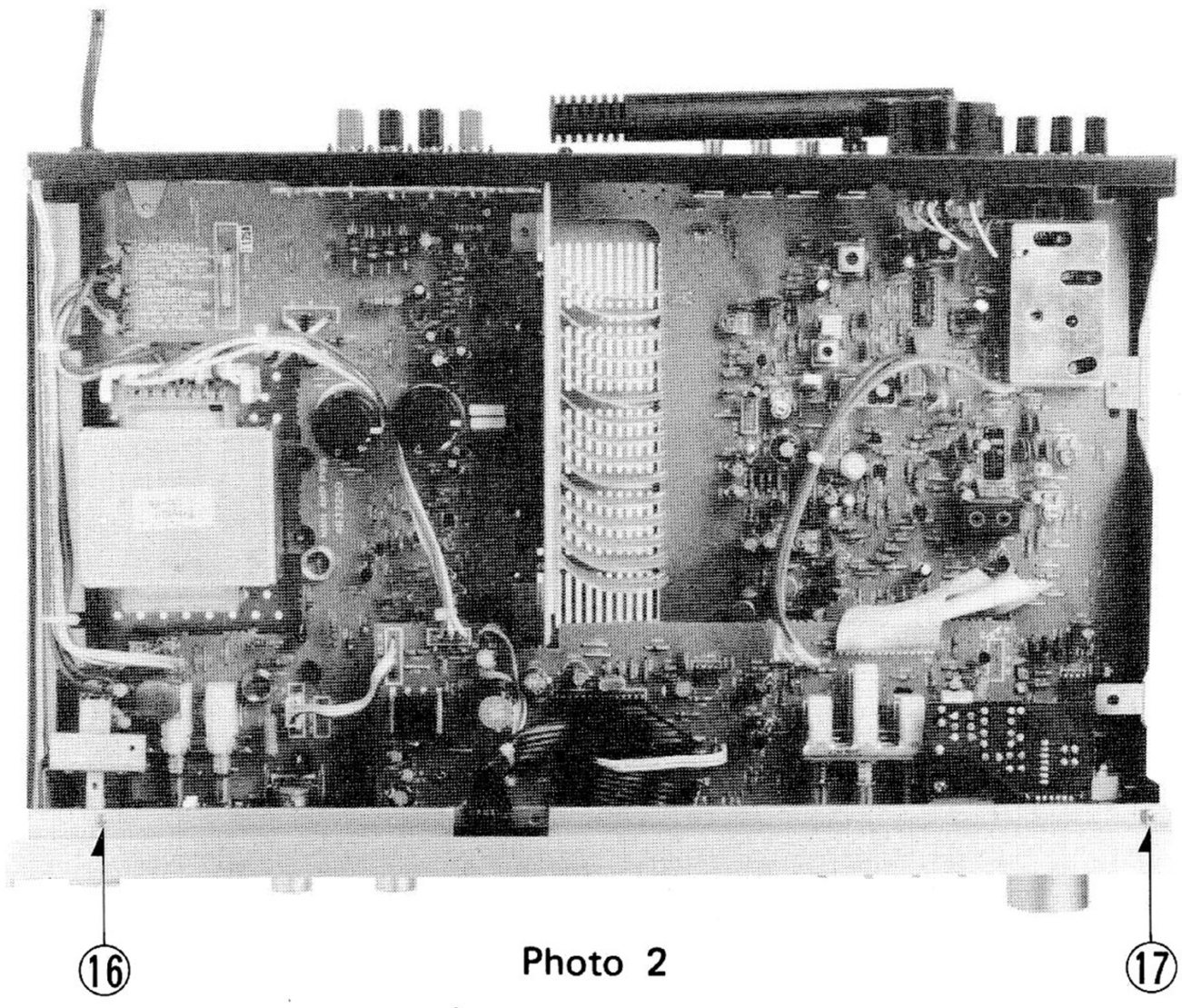

Photo 2

www.hifiengine.com

ALIGNMENT

TEST EQUIPMENTS

FM Signal Generator (FM SG)
Oscilloscope
AC Voltmeter
Distortion Meter
MPX Signal Generator (MPX SG)
Frequency Counter
AM Sweep Generator (AM SG)
DC Voltmeter

GENERAL ALIGNMENT INSTRUCTIONS

1. Always observe response curve on oscilloscope during alignment procedure.
2. Do not apply signals from FM or AM broadcast stations. Apply signals from generators only.
3. Use of excessive signal from FM SG or AM SG can cause overloading of the tuner circuits. To properly align the receiver, adjust FM SG or AM SG output level control so that response curve on oscilloscope is not distorted.
4. Input signal levels shown in the tables are measured at the antenna terminals of the receiver.
5. Allow a minimum of 10 minutes warm-up for test equipments and the receiver to be tested.
6. Turn the volume controls down to fully counter clockwise when the dummy load resistors or speakers are not connected to the speaker terminals.

FM SECTION

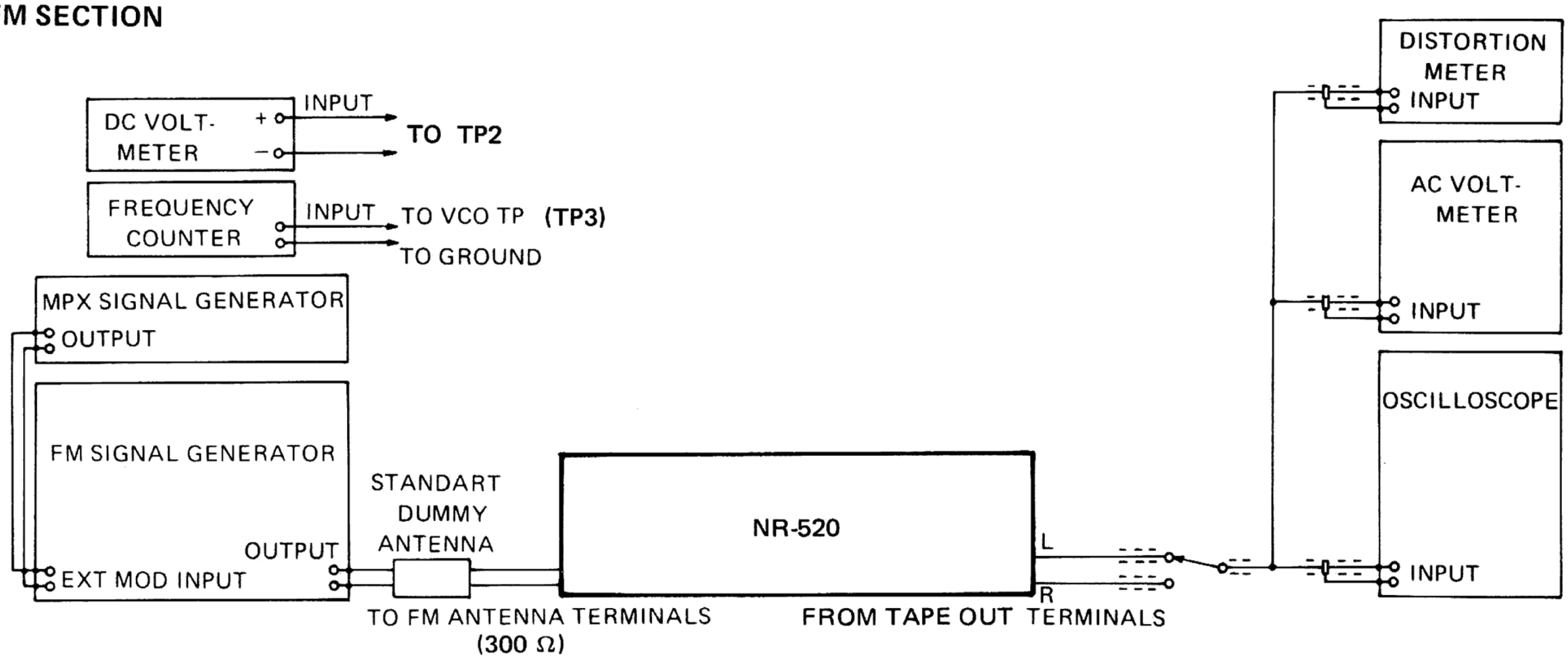

Figure 2 Test Equipment Hook-up

FM IF Alignment

STEP	FM SG FREQUENCY/ CALIBLATION	MODULATING FREQUENCY/ DEVIATION	SWITCHES OF THE RECEIVER	FRE-QUENCY DISPLAY	ADJUST-MENT POINT	PROCEDURE	REMARKS
1		(No modulation)	A. POWER to "ON". B. SELECTOR to "TUNER". C. BAND to "FM". D. MODE to "MONO".	Where no signal is tuned.	Primary core of T101	Adjust until DC voltmeter indicates zero volt.	Repeat steps 1 and 2 until distortion can no longer be minimized.
2	98.1 MHz/ 65 dBf (60 dBμ)	400 Hz/mono (± 75 kHz)		98.1 MHz	Secondary core of T101	Adjust for minimum distortion.	

Table 1 — 1

www.hifiengine.com

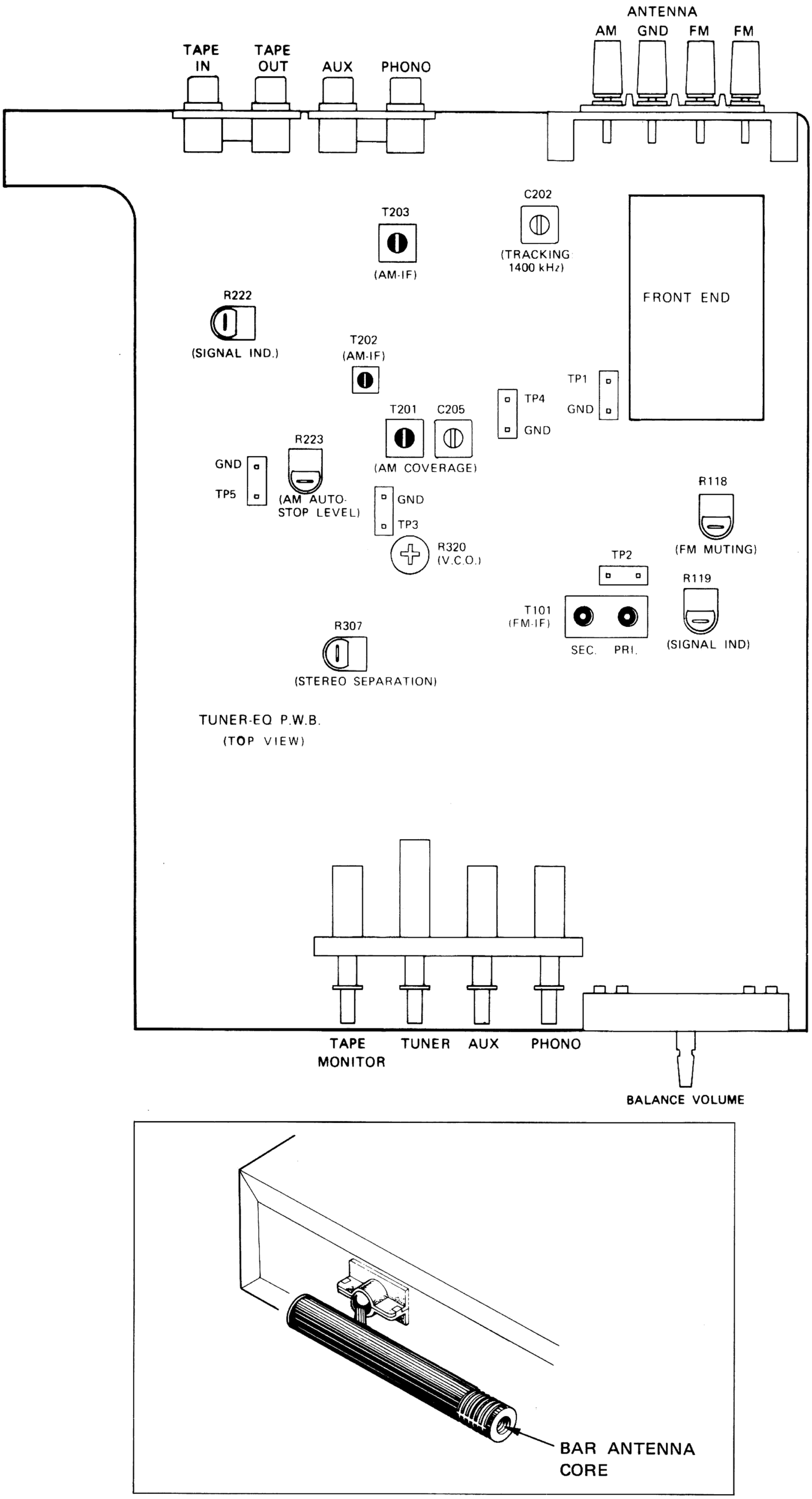

Figure 3 Adjustment Points

www.hifiengine.com

Muting Circuit Adjustment

STEP	FM SG FREQUENCY/ CALIBLATION	MODULATING FREQUENCY/ DEVIATION	SWITCHES OF THE RECEIVER	FREQUENCY DISPLAY	ADJUSTMENT POINT	PROCEDURE
1	98.1 MHz/ 65 dBf (60 dBμ)	400 Hz/mono [±75 kHz]	A. POWER to "ON". B. SELECTOR to "TUNER". C. BAND to "FM". D. FM MODE to "STEREO".	98.1 MHz		Check that audio output is observed on oscilloscope.
2	98.1 MHz/ 35 dBf (30 dBμ)				R118	Adjust until audio output is no longer present on oscilloscope.

Table 1-2

LED Signal-Strength Display Circuit Adjustment

STEP	FM SG FREQUENCY/ CALIBLATION	MODULATING FREQUENCY/ DEVIATION	SWITCHES OF THE RECEIVER	FREQUENCY DISPLAY	ADJUSTMENT POINT	PROCEDURE
1	98.1 MHz/ 65 dBf (60 dBμ)	400 Hz/mono [±75 kHz]	A. POWER to "ON". B. SELECTOR to "TUNER". C. BAND to "FM". D. FM MODE to "STEREO".	98.1 MHz	R119	Adjust until the signal-strength display LED lights.
2	(No signal)					Check that the LED goes off when the receiver is detuned.

Table 1-3

FM MPX Alignment

STEP	FM SG FREQUENCY/ CALIBLATION	MODULATING FREQUENCY/ DEVIATION	SWITCHES OF THE RECEIVER	FRE-QUENCY DISPLAY	ADJUST-MENT POINT	PROCEDURE	REMARKS
1	98.1 MHz/ 65 dBf (60 dBμ)	(Unmodulated carrier)	A. POWER to "ON" B. SELECTOR to "TUNER" C. BAND to "FM" D. FM MODE to "STEREO"	98.1 MHz	R320	Connect frequency counter to test points "TP3" and "GND" (Fig. 2). Adjust R320 for 76 kHz ± 100 Hz	
2		1 kHz/stereo [main (L) & sub (−L): ±67.5 kHz/pilot signal: ±7.5 kHz]			R307	Adjust for maximum separation (minimum output of right channel)	Check that stereo lamp lights up.
3		1 kHz/stereo [main (R) & sub (−R): ± ±67.5 kHz/pilot signal: ±7.5 kHz]				Adjust for maximum separation (minimum output of left channel)	Outputs of left and right channel should be equal.

Table 1-4

www.hifiengine.com

AM SECTION

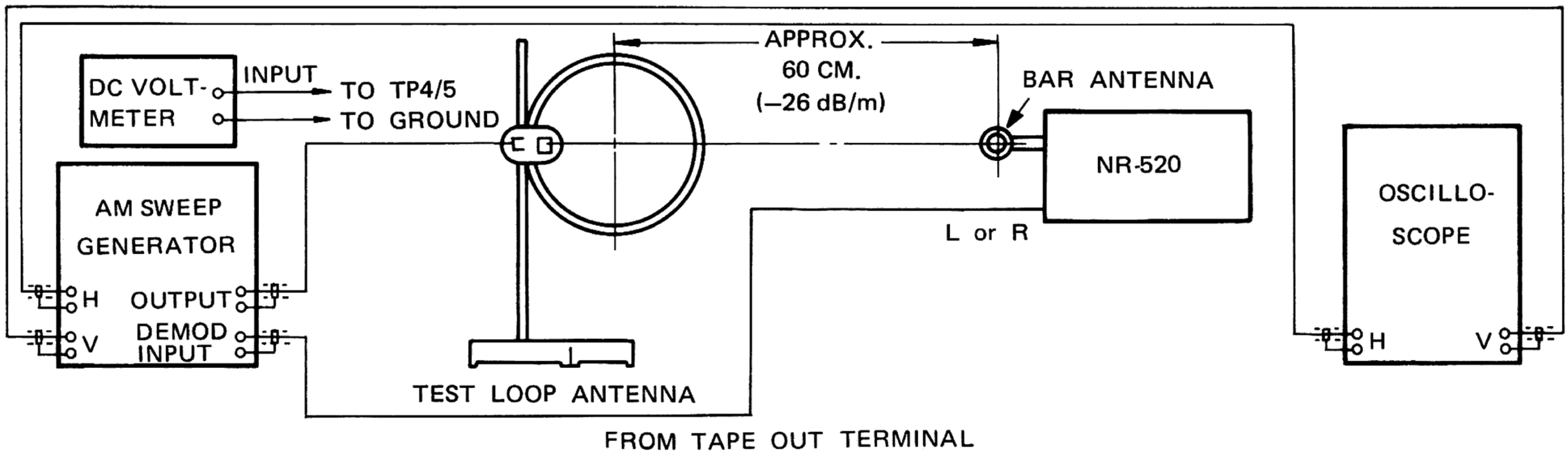

Figure 4 Test Equipment Hook-up

AM Frequency Coverage Alignment

NOTE: Apply no signal from AM SG.

STEP	SWITCHES OF THE RECEIVER	FREQUENCY DISPLAY	ADJUSTMENT POINT	PROCEDURE	REMARKS
1	A. POWER to "ON" B. SELECTOR to "TUNER" C. BAND to "AM"	1620 kHz (W-type) 1611 kHz (E-type)	C205	Connect DC voltmeter to test points "TP4" and "GND" (Fig. 3). Adjust C205 until DC voltmeter indicates approx. 8.0 V.	Repeat steps 1 and 2 several times and finally adjust the voltages to 8.0 V ± 100 mV at the high frequency end and 1.0 V ±50 mV at the low frequency end.
2		530 kHz (W-type) 522 kHz (E-type)	T201	Adjust T201 until DC voltmeter indicates approx. 1.0 V	

Table 2-1

AM Tracking Alignment

STEP	AM SG FREQUENCY CALIBRATION		MODULATING FREQUENCY/ MODULATION	SWITCHES OF THE RECEIVER	FREQUENCY DISPLAY	ADJUST FOR MAX. SCOPE INDICATION	REMARKS
1	600 kHz, 50 dB/m (W-type) 603 kHz, 50dB/m (e-type)	Set IF/RF switch of AM SG to "RF" position	400 Hz/30 %	A. POWER to "ON" B. SELECTOR to "TUNER" C. BAND to "AM"	600 kHz (W-type) 603 kHz (E-type)	Bar antenna core	Repeat steps 1 and 2 several times.
2	1400 kHz, 50 dB/m (W-type) 1404 kHz, 50 dB/m (E-type)				1400 kHz (W-type) 1404 kHz (E-type)	C202	

Table 2-2

NOTE: To check tracking errors, use an apparatus made of ferrite rod and copper wire (Figure 6). Move it toward the AM bar antenna gradually, while checking for the response curve on oscilloscope becoming smaller. If the response curve becomes larger, repeat steps 1 and 2 (See Figure 7).

www.hifiengine.com

AM IF Alignment

STEP	AM SG FREQUENCY/ CARIBLATION	MODULATING FREQUENCY/ MODULATION	SWITCHES OF THE RECEIVER	FREQUENCY DISPLAY	ADJUSTMENT POINT	REMARK
1	Set IF/RF switch of AM SG to "IF" position. 450 kHz, 50 dB/m	(Unmodulated carrier)	A. POWER to "ON" B. SELECTOR to "TUNER" C. BAND to "AM"	1620 kHz (W-type) 1611 kHz (E-type)	T202, 203	Adjust for maximum waveform on oscilloscope. (See Fig. 8)

Table 2-3

LED Signal-Strength Display Circuit Adjustment

STEP	AM SG FREQUENCY/ CARIBLATION	MODULATING FREQUENCY/ MODULATION	SWITCHES OF THE RECEIVER	FREQUENCY DISPLAY	ADJUSTMENT POINT	REMARK
1	600 kHz, 70 dB/m (W-type) 603 kHz, 70 dB/m (E-type)	400 Hz/30 %	A. POWER to "ON" B. SELECTOR to "TUNER" C. BAND to "AM"	600 kHz (W-type) 603 kHz (E-type)	R222	Adjust for signal-strength display LED lights up.
2	(No signal)					Check that the LED goes off when the receiver is detuned.

Table 2-4

AM Auto-Stop Level Adjustment

STEP	AM SG FREQUENCY/ CARIBLATION	MODULATING FREQUENCY/ MODULATION	SWITCHES OF THE RECEIVER	FREQUENCY DISPLAY	ADJUSTMENT POINT	REMARK
1	1000 kHz, 70 dB/m (W-type) 999 kHz, 70 dB/m (E-type)	400 Hz/30 %	A. POWER to "ON". B. SELECTOR to "TUNER". C. BAND to "AM".	1000 kHz (W-type) 999 kHz (E-type)	R223	Connect DC voltmeter to test points "TP5" and "GND". Adjust for 3V ± 0.1V.

Table 2-5

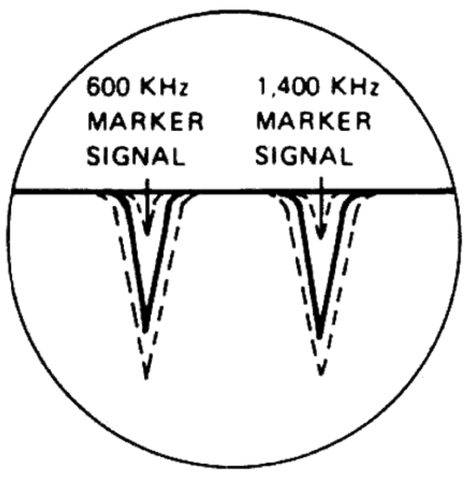

Figure 5
AM Frequency Coverage

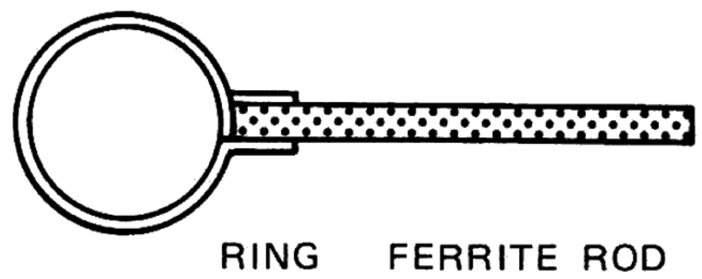

Figure 6 Apparatus

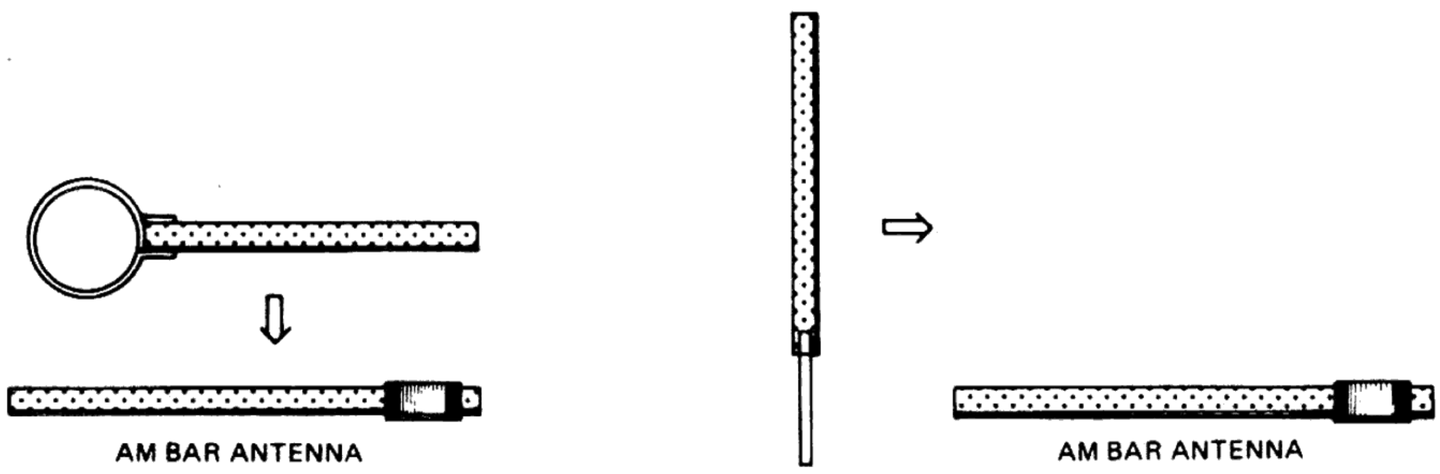

Figure 7 Tracking Errors

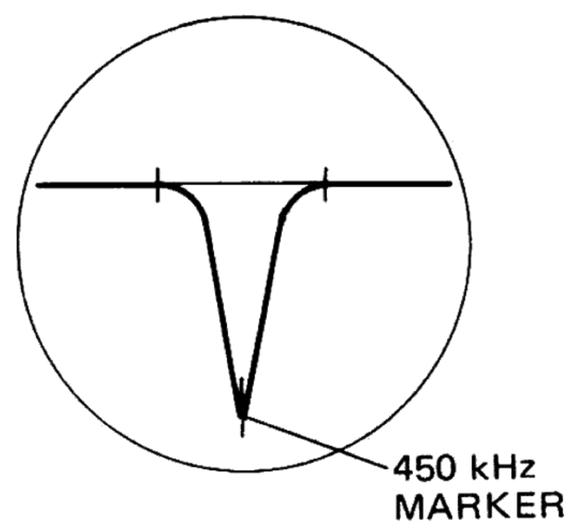

Figure 8 AM IF

www.hifiengine.com

PARTS LOCATION

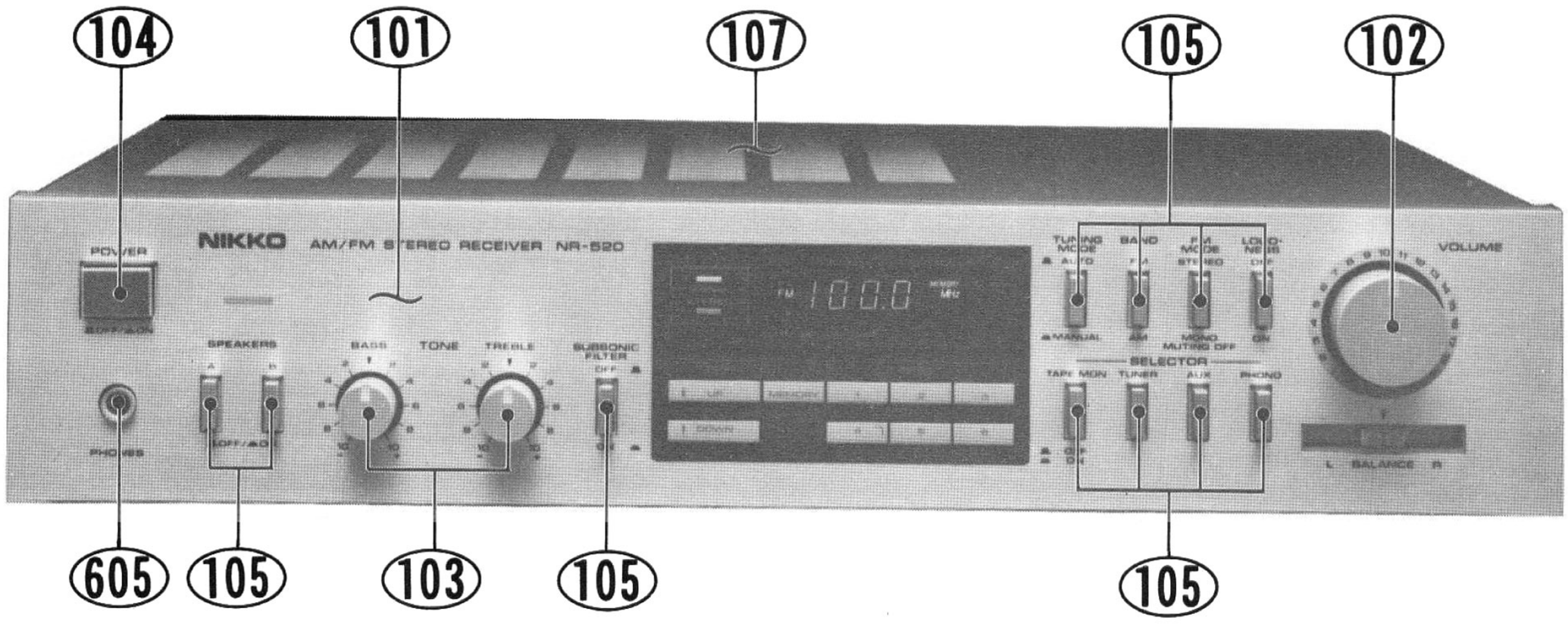

Photo 3

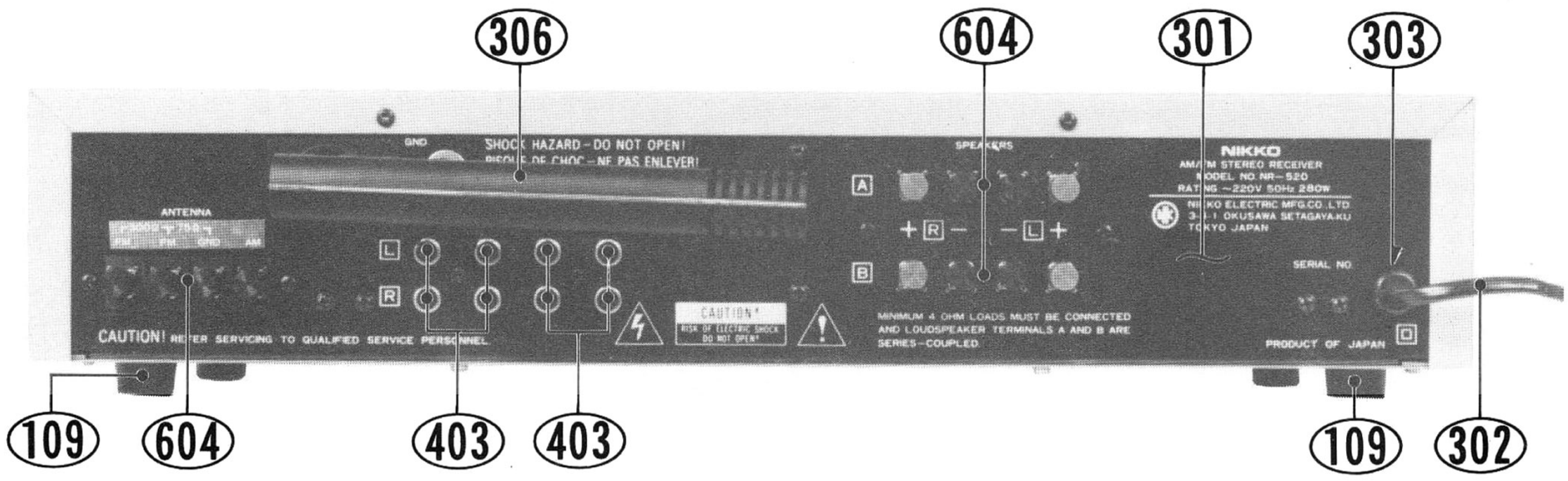

Photo 4

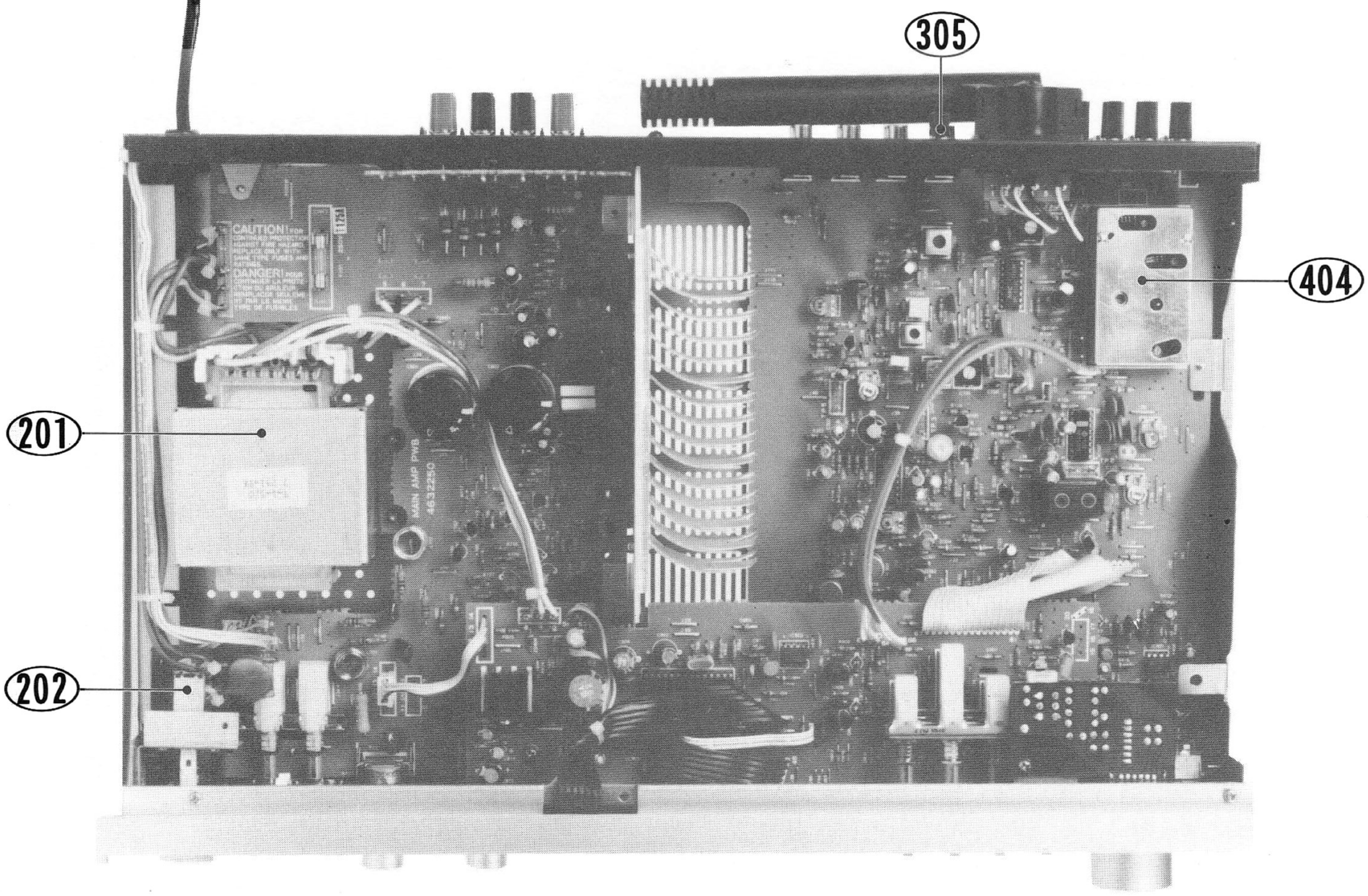

Photo 5

P.W. BOARD (Conductive Side View) Figure 9

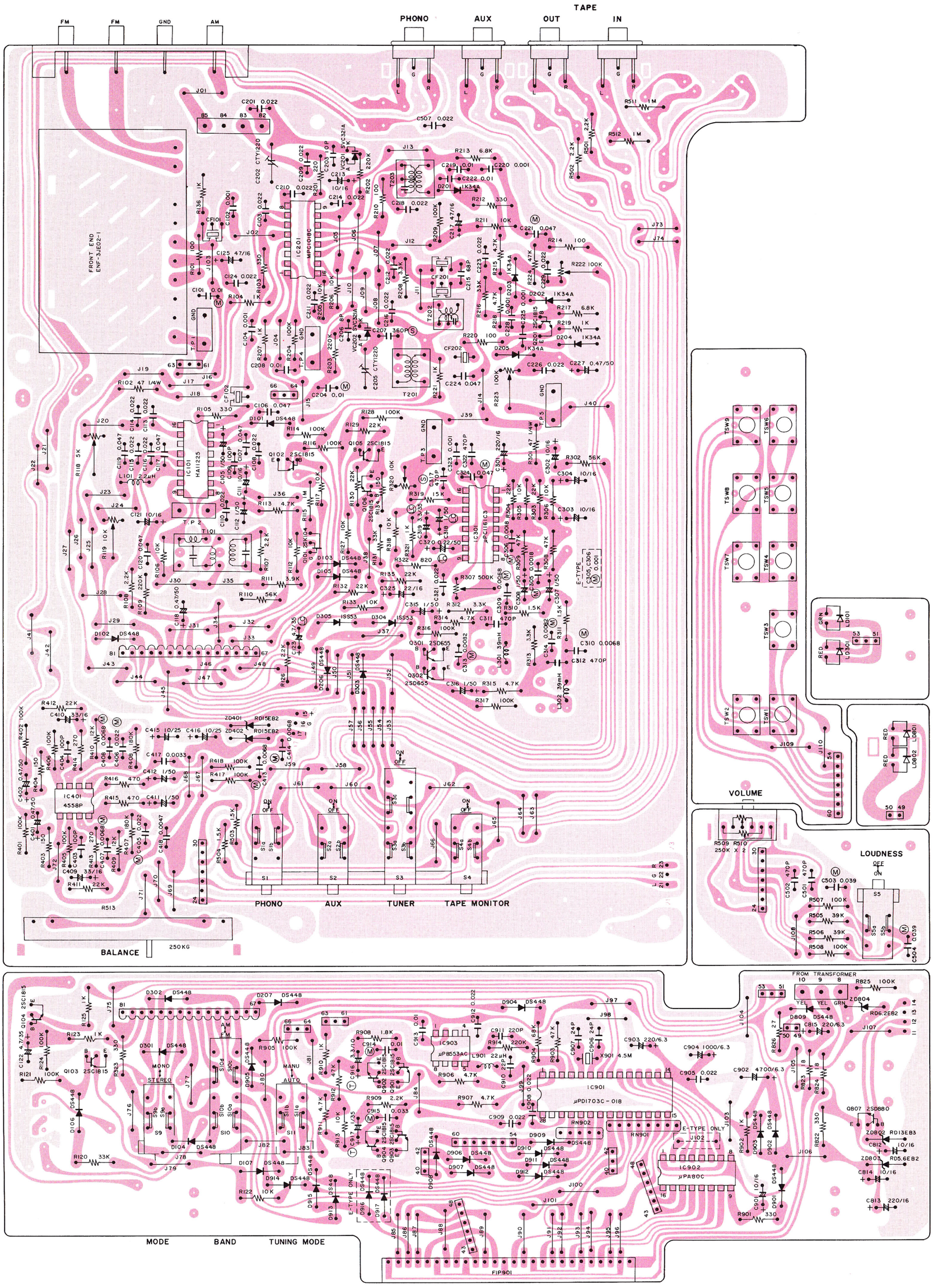

TUNER EQ PWB

P.W. BOARD (Conductive Side View) Figure 10

Note: The screens on the P.C.B. illustrations have the following significance.

GND
Other

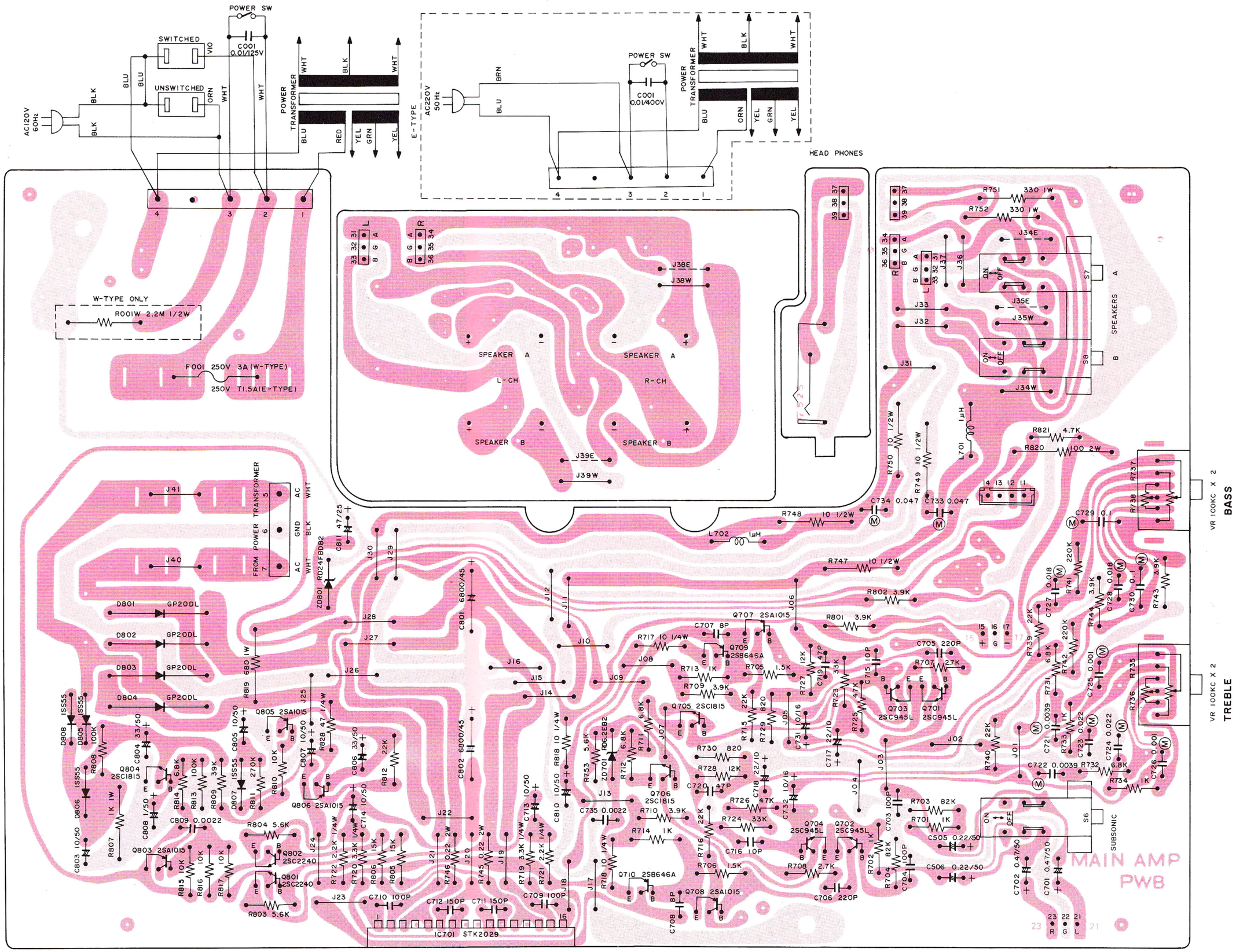

MAIN AMP PWB

PARTS LIST

NOTES:

1. ★ The REF. NUMBER (#) marked with a (★) on parts list is related to number of three digits with a (◯). (Photo 3～5)
2. + Numberals in file indicate the quantity of parts used in one type.
   W: U. S. A. & Canada model, AC 120V
   E: European model, AC 220V
3. ++ TR : Transistor
   FET : Field effect transistor
   VR : Volume control (Variable resistor)
   RES : Carbon film fixed resistor
   MO-RES : Metal oxide film fixed resistor
   CEM-RES : Cemented wirewound fixed resistor
   FP : Flame proof
   C-CAP : Ceramic capacitor
   E-CAP : Aluminum electrolytic capacitor
   M-CAP : Polyester film capacitor
   S-CAP : Polystyrene film capacitor
   T-CAP : Tantalum electrolytic capacitor
   BP-CAP : Bipolar electrolytic capacitor
   LC-CAP : Low current leakage electrolytic capacitor
4. Assemblies and parts are subject to change without notice.
5. Parts ordering procedure :
   A. DO NOT USE THE "REFERENCE" number and "SYMBOL" number. (these are control # for the factory only)
   B. Include in any order
      a. Part number. b. Part description. c. Model number.
      (any of the above lacking from an order may delay shipment of that order.)

WARNING :

⚠ INDICATES SAFETY CRITICAL COMPONENTS.
FOR CONTINUED SAFETY, REPLACE SAFETY CRITICAL COMPONENTS ONLY WITH MANUFACTURER'S RECOMMENDED PARTS.

REF. No.	SYMBOL No.	TYPE+ W	TYPE+ E	DESCRIPTION++	PART No.
				PACKING MATERIALS & ACCESSORIES	
001		1	1	Carton box	9826530
002		2	2	Pad	9841160
003		1	1	Sack, polyethylen cloth	9640720
004		1	1	Sack, polyethylen cloth – #13	9640320
005		1	1	Manual, instructions – in English and French	960424H
006		1	–	Card, warranty – U.S.A.	967046A
007		1	–	Card, warranty – Canada	967044A
008		1	–	List, service stations	9690210
009		1	1	Antenna, FM – Q-MATCH	4581360
				CABINET ASSEMBLY	
★101		1	1	Front panel assembly – with tuning buttons, pre-set buttons, balance knob and others	7886200
★102		1	1	Knob – 320SL-31D – volume	7841760
★103		2	2	Knob – 320SL-16DR – bass/treble	7841740
★104		1	1	Button, push – P1420SL – power	7852860
★105		11	11	Button, push – P414Z – others	7853160
106		1	1	Shaft, extension – 16.5 M	7405030
★107		1	1	Cover, top	7821400
108		1	1	Plate, bottom	7327760
★109		4	4	Foot, plastic	7402640
				CHASSIS ASSEMBLY	
⚠ ★201a		1	–	Transformer, power – T-1-509 – AC 120V	1105090
⚠ ★201b		–	1	Transformer, power – T-1-510 – AC 220V	1105100
⚠ ★202a		1	–	Switch, push – SDL-1P – power	4041810
⚠ ★202b		–	1	Switch, push – SDL-1P – power	4041820
⚠ 203a		1	–	C-CAP 0.01uf AC 120V	239103C
⚠ 203b		–	1	C-CAP 0.01uf AC 400V	239103S
⚠ 204		–	1	Cover, C-CAP	7400960
				BACK PLATE ASSEMBLY	
★301a		1	–	Plate, back – (W)	732790A
★301b		–	1	Plate, back – (E)	732791A
⚠ ★302a		1	–	Cord, AC line – DP-70	606007A
⚠ ★302b		–	1	Cord, AC line – CEE-2T	600510A
⚠ ★303a		1	–	Bush, power cord – SR-3P-4	7400620
⚠ ★303b		–	1	Bush, power cord – SR-4N-4	7400690
⚠ 304		2	–	Socket, AC outlet	4500150
★305		1	–	Terminal, GND	4450660
★306		1	1	Bar antenna, AM	1200560
				TUNER-EQUALIZER P. W. BOARD ASSEMBLY	
401	S1 ～ S4	1	1	Swtich, tetra push – tape monitor/selector	4042280
402	R513	1	1	VR, slide 250kohm (SW) – balance	4110080
★403		2	2	Terminal, RCA phono pin jack – 2P x 2	4444120
★404		1	1	Front end – ENF-3JE02-1	4910360
				(FM-IF SECTION)	
	T101	1	1	Coil, FM discriminator	1240520
	L101	1	1	Coil – 2.2uH	1210990
	CF101,102	2	2	Ceramic filter – SFE10.7MS2-GY	128075A
	IC101	1	1	IC HA11225	518070S
	Q101	1	1	FET 2SK104 (F)	516026S
	Q102,105, Q106	3	3	TR 2SC1815 (Y or GR)	512107S
	D101～103, D105	4	4	Diode DS448	501026S
	C101	1	1	M-CAP 0.01uf 5% 50V	222103J
	C102,104	2	2	C-CAP 0.001uf +80, –20% 50V YG	231102Z
	C103	1	1	C-CAP 0.022uf +80, –20% 50V YG	231223Z
	C105	1	1	E-CAP 1uf 50V	211510S
	C106,107	2	2	C-CAP 0.047uf +80, –20% 50V YG	231473Z
	C108,110	2	2	C-CAP 0.022uf +80, –20% 50V YG	231223Z
	C109	1	1	C-CAP 100pf 10% 50V SL	232101K
	C111	1	1	E-CAP 10uf 16V	211220S
	C112	1	1	E-CAP 1uf 50V	211510S
	C113～116	4	4	C-CAP 0.022uf +80, –20% 50V YG	231223Z

www.hifiengine.com

PART ORDERING PROCEDURE ----- DO NOT USE THE "REFERENCE" number and "SYMBOL" number. (these are control # for the factory only.) Include in any order: a. Part number b. Part description c. Model number. (any of the above lacking from an order may delay shipment of that order.) Excluded parts in the Parts List are not available as replacement parts.

REF. No.	SYMBOL No.	TYPE+ W	TYPE+ E	DESCRIPTION++	PART No.
	C117,119, C120	3	3	C-CAP 0.047uf +80, –20% 50V YG	231473Z
	C118	1	1	E-CAP 0.47uf 50V	211505S
	C121	1	1	E-CAP 10uf 16V	211220S
	C123	1	1	LC-CAP 1uf 50V	211510L
	C124	1	1	C-CAP 0.022uf +80, –20% 50V YG	231223Z
	C125	1	1	E-CAP 47uf 16V	211225S
	R118,119	2	2	Potentiometer 10kohm	4301580
	R101	1	1	RES 33 ohms 5% ¼W	328330J
	R102	1	1	FP-RES 47ohm 5% ¼W	328470L
	R103,105	2	2	RES 330ohm 5% ¼W	328331J
	R104	1	1	RES 560ohm 5% ¼W	328561J
	R106	1	1	RES 10kohm 5% ¼W	328103J
	R107,108	2	2	RES 2.2kohm 5% ¼W	328222J
	R109	1	1	RES 220kohm 5% ¼W	328224J
	R110	1	1	RES 56kohm 5% ¼W	328563J
	R111	1	1	RES 3.9kohm 5% ¼W	328392J
	R112	1	–	RES 10kohm 5% ¼W	328103J
	R112	–	1	RES 22kohm 5% ¼W	328223J
	R113	1	1	RES 4.7kohm 5% ¼W	328472J
	R114,116	2	2	RES 100kohm 5% ¼W	328104J
	R115	1	1	RES 1meg.ohm 5% ¼W	328105J
	R117	1	1	RES 10kohm 5% ¼W	328103J
	R126,127	2	2	RES 10kohm 5% ¼W	328103J
	R128	1	1	RES 100kohm 5% ¼W	328104J
	R129,130	2	2	RES 22kohm 5% ¼W	328223J
	R131	1	1	RES 33kohm 5% ¼W	328333J
	R132	1	1	RES 22kohm 5% ¼W	328223J
	R133	1	1	RES 10kohm 5% ¼W	328103J
	R134	1	1	RES 330ohm 5% ¼W	328331J
	R135	1	1	RES 22kohm 5% ¼W	328223J
	R136	1	1	RES 1kohm 5% ¼W	328102J
	(MPX SECTION)				
	L301,302	2	2	Coil – 39mH	1260120
	IC301	1	1	IC μPC1161C3	518135S
	Q301,302	2	2	TR 2SD655 (E or F)	513115S
	D303	1	1	Diode DS448	501026S
	D304,305	2	2	Diode 1SS53	501023S
	C301	1	1	E-CAP 220uf 16V	211232S
	C302~304	3	3	E-CAP 10uf 16V	211220S
	C305,306	2	–	M-CAP 0.0018uf 5% 50V	222182J
	C305,306	–	2	M-CAP 0.001uf 5% 50V	222102J
	C307,308	2	2	E-CAP 1uf 50V	211510S
	C309,310	2	2	M-CAP 0.0068uf 5% 50V	222682J
	C311,312	2	2	C-CAP 470pf 5% 50V SL	232471J
	C313,314	2	2	M-CAP 0.0082uf 5% 50V	222822J
	C315,316	2	2	E-CAP 1uf 50V	211510S
	C317	1	1	S-CAP 470pf 5% 50V	223471V
	C318	1	1	LC-CAP 1uf 50V	211510L
	C319	1	1	LC-CAP 3.3uf 35V	211413L
	C320	1	1	LC-CAP 0.22uf 50V	211502L
	C321	1	1	C-CAP 0.022uf +80, –20% 50V YG	231223Z
	C322	1	1	C-CAP 470pf 5% 50V	232471J

REF. No.	SYMBOL No.	TYPE+ W	TYPE+ E	DESCRIPTION++	PART No.
	C323	1	1	C-CAP 0.001uf +80, –20% 50V YG	231102Z
	C324	1	1	M-CAP 0.047uf 5% 50V	222473J
	R307	1	1	Potentiometer 500kohm	4301630
	R320	1	1	Potentiometer 10kohm	4300510
	(AM SECTION)				
	T201	1	1	Coil, AM oscillator	1220130
	T202	1	1	Coil, AM IF	1230160
	T203	1	1	Coil, AM discriminator	1230250
	CF201	1	1	Ceramic filter, AM – SFZ450A	1180730
	CF202	1	1	Ceramic filter, AM – BFU450C4N	1280800
	IC201	1	1	IC μPC1018C	518186S
	Q201	1	1	TR 2SC1815 (Y or GR)	512107S
	VC201,202	2	2	Variable capacitance diode SVC321-A	504003S
	D201~205	5	5	Diode 1K34A	500017G
	D206	1	1	Diode DS448	501026S
	C202,205	2	2	Capacitor, trimmer – CTY122D	4241070
	C201	1	1	C-CAP 0.022uf +80, –20% 50V YG	231223Z
	C203	1	1	C-CAP 10pf 10% 50V SL	232100K
	C204	1	1	M-CAP 0.01uf 5% 50V	222103J
	C206	1	1	C-CAP 8pf 50V NPO	232809C
	C207	1	1	S-CAP 360pf 5% 50V	223361V
	C208	1	1	C-CAP 0.01uf +80, –20% 50V YG	231103Z
	C209~212	4	4	C-CAP 0.022uf +80, –20% 50V YG	231223Z
	C213	1	1	E-CAP 10uf 16V	211220S
	C214,216	2	2	C-CAP 0.022uf +80, –20% 50V YG	231223Z
	C215	1	1	C-CAP 68pf 10% 50V SL	232680K
	C218,223	2	2	C-CAP 0.022uf +80, –20% 50V YG	231223Z
	C219,220	2	2	C-CAP 0.01uf +80, –20% 50V YG	231103Z
	C221	1	1	M-CAP 0.047uf 5% 50V	222473J
	C222	1	1	C-CAP 0.01uf +80, –20% 50V YG	231103Z
	C224	1	1	C-CAP 0.047uf +80, –20% 50V YG	231473Z
	C225,228	2	2	C-CAP 0.001uf +80, –20% 50V YG	231102Z
	C226,229	2	2	C-CAP 0.022uf +80, –20% 50V YG	231223Z
	C227	1	1	E-CAP 0.47uf 50V	211505S
	R222,223	2	2	Potentiometer 100kohm	4301610
	R201	1	1	RES 220 ohm 5% ¼W	328221J
	R202,203	2	2	RES 220kohm 5% ¼W	328224J
	R204	1	1	RES 100kohm 5% ¼W	328104J
	R205,206	2	2	RES 10kohm 5% ¼W	328103J
	R207	1	1	RES 1kohm 5% ¼W	328102J
	R208	1	1	RES 3.3kohm 5% ¼W	328332J
	R209	1	1	RES 100kohm 5% ¼W	328104J
	R210	1	1	RES 100ohm 5% ¼W	328101J
	R211	1	1	RES 10kohm 5% ¼W	328103J
	R212	1	1	RES 330ohm 5% ¼W	328331J
	R213	1	1	RES 6.8kohm 5% ¼W	328682J
	R214	1	1	RES 100ohm 5% ¼W	328101J
	R215	1	1	RES 4.7kohm 5% ¼W	328472J
	R216	1	1	RES 33kohm 5% ¼W	328333J
	R217	1	1	RES 6.8kohm 5% ¼W	328682J
	R218	1	1	RES 4.7kohm 5% ¼W	328472J
	R219	1	1	RES 1kohm 5% ¼W	328102J
	R220	1	1	RES 100ohm 5% ¼W	328101J
	R221	1	1	RES 1kohm 5% ¼W	328102J
	(EQ AMP SECTION)				
	IC401	1	1	IC TL4558P-A	518195S
	ZD401,402	2	2	Zener diode RD15EB2	502050S

www.hifiengine.com

PART ORDERING PROCEDURE ----- DO NOT USE THE "REFERENCE" number and "SYMBOL" number. (these are control # for the factory only.) Include in any order: a. Part number b. Part description c. Model number. (any of the above lacking from an order may delay shipment of that order.) Excluded parts in the Parts List are not available as replacement parts.

REF. No.	SYMBOL No.	TYPE+ W	TYPE+ E	DESCRIPTION++					PART No.
	C401,402	2	2	E-CAP	0.47uf	50V			211505S
	C403,404	2	2	C-CAP	100pf	10%	50V	SL	232101K
	C405,406	2	2	M-CAP	0.022uf	10%	50V		222223K
	C407,408	2	2	M-CAP	0.0068uf	10%	50V		222682K
	C409,410	2	2	E-CAP	33uf	16V			211223S
	C411,412	2	2	E-CAP	1uf	50V			211510S
	C413,414	2	2	M-CAP	0.0068uf	10%	50V		222682K
	C415,416	2	2	E-CAP	10uf	25V			211320S
	R401,402	2	2	RES	100kohm	5%	¼W		328104J
	R403,404	2	2	RES	150ohm	5%	¼W		328151J
	R405,406	2	2	RES	100kohm	5%	¼W		328104J
	R407,408	2	2	RES	180kohm	5%	¼W		328184J
	R409,410	2	2	RES	12kohm	5%	¼W		328123J
	R411,412	2	2	RES	22kohm	5%	¼W		328223J
	R413,414	2	2	RES	270ohm	5%	¼W		328271J
	R415,416	2	2	RES	470ohm	5%	¼W		328471J
	R417,418	2	2	RES	100kohm	5%	¼W		328104J
	(VOLUME AND LOUDNESS CONTROL SECTION)								
	S5	1	1	Switch, mono push – loudness					4042300
	R509,510	1	1	Volume 250kohm (B) x 2 – volume					4321330
	C501,502	2	2	C-CAP	470pf	10%	50V	SL	232471K
	C503,504	2	2	M-CAP	0.039uf	10%	50V		222393K
	R503,504	2	2	RES	1.5kohm	5%	¼W		328152J
	R505,506	2	2	RES	39kohm	5%	¼W		328393J
	R507,508	2	2	RES	100kohm	5%	¼W		328104J
	CONTROL P. W. BOARD ASSEMBLY								
501	SW9 ~ 11	1	1	Switch, tri push – tuning mode/band/ FM mode					4042350
502	FIP901	1	1	Fluorescent indicator panel					5890010
	L901	1	1	Inductor – 22uH					1210930
	X901	1	1	Crystal, quartz – 4.5MHz					1280820
	IC901	1	1	IC μPD1703C-018					518187S
	IC902	1	1	IC μPA80C					518188S
	IC903	1	1	IC μPB553AC					518099S
	Q901~904, Q103,104	6	6	TR 2SC1815 (Y or GR)					512107S
	(Diodes)	21	23	Diode DS448					501026S
	C122	1	1	E-CAP	4.7uf	35V			211415S
	C901	1	1	E-CAP	10uf	16V			211220S
	C902	1	1	LC-CAP	4700uf	6.3V			211045L
	C903	1	1	E-CAP	220uf	6.3V			211032S
	C904	1	1	E-CAP	1000uf	6.3V			211040S
	C905	1	1	C-CAP	0.022uf	+80, –20%	50V	YG	231223Z
	C906,907	2	2	C-CAP	22pf	50V	NPO		232220C
	C908,909	2	2	C-CAP	0.022uf	+80, –20%	50V	YG	231223Z
	C910	1	1	C-CAP	22pf	10%	50V	SL	232220K
	C911	1	1	C-CAP	220pf	10%	50V	SL	232221K
	C912	1	1	C-CAP	0.022uf	+80, –20%	50V	YG	231223Z
	C913	1	1	C-CAP	0.01uf	+80, –20%	50V	YG	231103Z
	C914	1	1	M-CAP	0.01uf	5%	50V		222103J
	C915	1	1	M-CAP	0.033uf	5%	50V		222333J
	C916	1	1	T-CAP	3.3uf	10V			252113M
	C917	1	1	T-CAP	1uf	35V			252410M
	RN901	1	1	Resistor network 100kohm x 7					519008K

REF. No.	SYMBOL No.	TYPE+ W	TYPE+ E	DESCRIPTION++				PART No.
	RN902	1	1	Resistor network 100kohm x 4				519002K
	R901	1	1	RES	330ohm	5%	¼W	328331J
	R902	1	1	RES	1kohm	5%	¼W	328102J
	R903	1	1	RES	47kohm	5%	¼W	328473J
	R904	1	1	RES	68kohm	5%	¼W	328683J
	R905	1	1	RES	100kohm	5%	¼W	328104J
	R906,907	2	2	RES	4.7kohm	5%	¼W	328472J
	R908	1	1	RES	1.8kohm	5%	¼W	328182J
	R909	1	1	RES	2.2kohm	5%	¼W	328222J
	R910	1	1	RES	1kohm	5%	¼W	328102J
	R911	1	1	RES	4.7kohm	5%	¼W	328472J
	R912	1	1	RES	47kohm	5%	¼W	328473J
	R913	1	1	RES	10kohm	5%	¼W	328103J
	R914	1	1	RES	220kohm	5%	¼W	328224J
	R120	1	1	RES	33kohm	5%	¼W	328333J
	R121	1	1	RES	100kohm	5%	¼W	328104J
	R122	1	1	RES	10kohm	5%	¼W	328103J
	R123,125	2	2	RES	1kohm	5%	¼W	328102J
	R124	1	1	RES	100kohm	5%	¼W	328104J
	(REGULATOR SECTION)							
	Q807	1	1	TR 2SD880 (Y or GR)				513106S
	D809	1	1	Diode DS448				501026S
	ZD802	1	1	Zener diode RD13EB3				502063S
	ZD803	1	1	Zener diode RD5.6EB2				502079S
	ZD804	1	1	Zener diode RD6.2EB2				502048S
	C812,814	2	2	E-CAP	10uf	16V		211220S
	C813	1	1	E-CAP	220uf	16V		211232S
	C815	1	1	E-CAP	220uf	6.3V		211032S
	R822	1	1	RES	330ohm	5%	¼W	328331J
	R823,824	2	2	RES	18ohm	5%	¼W	328180J
	R825	1	1	RES	100kohm	5%	¼W	328104J
	R826	1	1	RES	27ohm	5%	¼W	328270J
	(TACT SWITCH SECTION)							
	TSW1~9	9	9	Switch, tact – EVQ-QJ104K				4060120
	(INDICATOR SECTION)							
	LD101	1	1	LED TLG113A – signal indicator, green				5060470
	LD301	1	1	LED TLG120 – stereo indicator, red				5060480
	LD801,802	2	2	LED TLS113 – power indicator, red				5060540

www.hifiengine.com

PART ORDERING PROCEDURE ----- DO NOT USE THE "REFERENCE" number and "SYMBOL" number. (these are control # for the factory only.) Include in any order: a. Part number b. Part description c. Model number. (any of the above lacking from an order may delay shipment of that order.) Excluded parts in the Parts List are not available as replacement parts.

REF. No.	SYMBOL No.	TYPE+ W	TYPE+ E	DESCRIPTION++	PART No.
				MAIN AMP P.W. BOARD ASSEMBLY	
				(MAIN AMP SECTION)	
601	S6	1	1	Switch, mono push – subsonic filter	4042310
602	S7, 8	1	1	Switch, twin push – PSC022 – speakers A, B	4042290
603	R735,736, R737,738	2	2	VR 100kohm (C) x 2 – bass/treble	4321340
	L701,702	2	2	Coil, choke – 1uh	1210960
	IC701	1	1	IC STK2029	518165S
	Q701~704	4	4	TR 2SC945L (P)	512137S
	Q705,706	2	2	TR 2SC1815 (Y or GR)	512107S
	Q707,708	2	2	TR 2SA1015 (Y)	510102S
	Q709,710	2	2	TR 2SB646A (B or C)	511115S
	ZD701	1	1	Zener diode RD6.2EB2	502048S
	C505,506	2	2	E-CAP 0.22uf 50V	211502S
	C701,702	2	2	E-CAP 0.47uf 50V	211505S
	C703,704	2	2	C-CAP 100pf 10% 50V SL	232101K
	C705,706	2	2	C-CAP 220pf 10% 50V SL	232221K
	C707,708	2	2	C-CAP 8pf ± 0.5pf 50V SL	232809D
	C709,710	2	2	C-CAP 100pf 50V SL	232101K
	C711,712	2	2	C-CAP 150pf 50V SL	232151K
	C713,714	2	2	E-CAP 10uf 50V	211520S
	C715,716	2	2	C-CAP 10pf 10% 50V SL	232100K
	C717,718	2	2	E-CAP 22uf 10V	211122S
	C719,720	2	2	C-CAP 47pf 10% 50V SL	232470K
	C721,722	2	2	M-CAP 0.0039uf 10% 50V	222392K
	C723,724	2	2	M-CAP 0.022uf 10% 50V	222223K
	C725,726	2	2	M-CAP 0.001uf 10% 50V	222102K
	C727,728	2	2	M-CAP 0.018uf 10% 50V	222183K
	C729,730	2	2	M-CAP 0.1uf 10% 50V	222104K
	C731,732	2	2	M-CAP 10uf 16V	211220K
	C733,734	2	2	M-CAP 0.047uf 10% 50V	222473K
	C735	1	1	C-CAP 0.0022uf 10% 50V	231222K
	R701,702	2	2	RES 1kohm 5% ¼W	328102J
	R703,704	2	2	RES 82kohm 5% ¼W	328823J
	R705,706	2	2	RES 1.5kohm 5% ¼W	328152J
	R707,708	2	2	RES 2.7kohm 5% ¼W	328272J
	R709,710	2	2	RES 3.9kohm 5% ¼W	328392J
	R711,712	2	2	RES 6.8kohm 5% ¼W	328682J
	R713,714	2	2	RES 1kohm 5% ¼W	328102J
	R715,716	2	2	RES 22kohm 5% ¼W	328223J
	R717,718	2	2	FP-RES 10ohm 5% ¼W	328100L
	R179,720	2	2	FP-RES 3.3kohm 5% ¼W	328332L
	R721,722	2	2	FP-RES 2.2kohm 5% ¼W	328222L
	R723,724	2	2	RES 33kohm 5% ¼W	328333J
	R725,726	2	2	RES 47kohm 5% ¼W	328473J
	R727,728	2	2	RES 12kohm 5% ¼W	328123J
	R729,730	2	2	RES 820ohm 5% ¼W	328821J
	R731,732	2	2	RES 6.8kohm 5% ¼W	328682J
	R733,734	2	2	RES 1kohm 5% ¼W	328102J
	R739,740	2	2	RES 22kohm 5% ¼W	328223J
	R741,742	2	2	RES 220kohm 5% ¼W	328224J
	R743,744	2	2	RES 3.9kohm 5% ¼W	328392J
	R745,746	2	2	CEM-RES 0.22ohm 10% 2W	382229W
	R747~750	4	4	FP-RES 10ohm 5% ½W	329100L
	R751,752	2	2	FP-MO-RES 330ohm 5% 1W	361331L
	R753	1	1	RES 5.6kohm 5% ¼W	328562J

REF. No.	SYMBOL No.	TYPE+ W	TYPE+ E	DESCRIPTION++	PART No.
				(REGULATOR SECTION)	
	Q801,802	2	2	TR 2SC2240 (GR or BL)	512102S
	Q803,805, Q806	3	3	TR 2SA1015 (Y)	510102S
	Q804	1	1	TR 2SC1815 (Y or GR)	512107S
	D801~804	4	4	Diode GP20D-L	560065S
	D805~808	4	4	Diode 1SS55	501024S
	ZD801	1	1	Zener diode RD24FBDB2	502104S
	C801,802	2	2	E-CAP 6800uf 45V	2100240
	C803,805	2	2	E-CAP 10uf 50V	211520S
	C804,806	2	2	E-CAP 33uf 50V	211523S
	C807	1	1	E-CAP 10uf 50V	211520S
	C808	1	1	E-CAP 1uf 50V	211510S
	C809	1	1	C-CAP 0.0022uf 10% 50V	231222K
	C810	1	1	E-CAP 10uf 50V	211520S
	C811	1	1	E-CAP 47uf 25V	211325S
	R801,802	2	2	RES 3.9kohm 5% ¼W	328392J
	R803,804	2	2	RES 5.6kohm 5% ¼W	328562J
	R805,806	2	2	RES 15kohm 5% ¼W	328153J
	R807	1	1	FP-MO-RES 1kohm 5% 1W	361102L
	R808	1	1	RES 100kohm 5% ¼W	328104J
	R809	1	1	RES 39kohm 5% ¼W	328393J
	R810	1	1	RES 10kohm 5% ¼W	328103J
	R811	1	1	RES 270kohm 5% ¼W	328274J
	R812	1	1	RES 22kohm 5% ¼W	328223J
	R813	1	1	RES 100kohm 5% ¼W	328104J
	R814	1	1	RES 6.8kohm 5% ¼W	328682J
	R815~817	3	3	RES 10kohm 5% ¼W	328103J
	R818	1	1	FP-RES 10ohm 5% ¼W	348100L
	R819	1	1	FP-MO-RES 680ohm 5% 1W	361681L
	R820	1	1	FP-MO-RES 100ohm 5% 2W	357101V
	R821	1	1	RES 4.7kohm 5% ¼W	328472J
	R828	1	1	FP-RES 47ohm 5% ¼W	348470L
				(OUTPUT SECTION)	
★604		1	1	Terminal, speakers – 8P	4450640
★605		1	1	Jack, headphones	4550390
				(PRIMARY SECTION)	
⚠	F001	1	–	Fuse 3A 250V	4700630
⚠	F001	–	1	Midget fuse T1.25A 250V	4720970
⚠	R001	1	–	RES 2.2meg.ohm 5% ½W	329225J

www.hifiengine.com

SEMICONDUCTOR DATA

TRANSISTORS

† NOTES

Ge : Germanium
Si : Sillicon

A : Alloy
B : Base
D : Diffused
Dd : Double-diffused

Df : Drift-field
E : Epitaxial
G : Grown
J : Junction

M : Mesa
P : Planer
Pc : Point-contact
Td : Triple-diffused

DEVICE TYPE	APPLICATIONS	STRUCTURE†	MAXIMUM RATINGS Absolute-Maximum Values: (T_A = 25°C unless otherwise specified)					ELECTRICAL CHARACTERISTICS Typical Values: (T_A = 25°C unless otherwise specified)														MANUFACTURER
			Collector-to-Base Voltage V_{CBO} (V)	Emitter-to Base Voltage V_{EBO} (V)	Collector Current I_C (mA)	Collector Dissipation P_C (mW)	Junction Temperature T_J (°C)	Collector Cutoff Current I_{CBO} (uA)	V_{CB} (V)	Static Forward-Current Transfer Ratio h_{FE}	V_{CE} (V)	I_C (mA)	Collector-Emitter Saturation Voltage $V_{CE(sat)}$ (V)	I_C (mA)	I_B (mA)	Gain-Bandwidth Product f_T $f_{\alpha b}$* (MHz)	V_{CE} V_{CB}* (V)	I_E I_C* (mA)	Output Capacitance C_{ob} (pF)	Others	
2SA1015 (Y)	AF, General	PNP Si-E	−50	−5	−150	400	125	−0.1 max.	−50	120 ~ 240	−6	−2	−0.3 max.	−100	−10	80 min.	−10	−1*	7 max.		TOSHIBA
2SB646A (B, C)	AF, Voltage amp.	PNP Si-E	−120	−5	− 50	900	150	−10 max.	−100	60 ~ 200	−5	−10	−2 max.	−30	−3	140	−5	−10*	4		HITACHI
2SC945L (P)	AF, Low noise	NPN Si-E	60	5	100	250	125	0.1 max.	60	200 ~ 400	6	1	0.3 max.	100	10	450 max.	6	10	5 max.		N E C
2SC1815 (Y, GR)	AF, General	NPN Si-E	60	5	150	400	125	0.1 max.	60	120 ~ 400	6	2	0.25 max.	100	10	80 min.	10	1*	3 max.		TOSHIBA
2SC2240 (GR, BL)	AF, Low noise	NPN Si-E	120	5	100	300	125	0.1 max.	120	200 ~ 700	6	2	0.3 max.	10	1	100	6	1*	3		TOSHIBA
2SD655 (E, F)	AF, Muting	NPN Si-E	30	5	700	500	150	1 max.	20	400 ~1200	1	150	0.5 max.	500	50	250	1	150*			HITACHI
2SD880 (Y, GR)	AF, Power amp.	NPN Si-Td	60	7	3A	30W (Tc=25°C)	150	100 max.	60	100 ~ 300	5	0.5A	1 max.	3A	300	3	5	−500	70		TOSHIBA

FIELD EFFECT TRANSISTOR

DEVICE TYPE	APPLICATIONS	STRUCTURE†	MAXIMUM RATINGS Absolute-Maximum Values: (T_A = 25°C unless otherwise specified)						ELECTRICAL CHARACTERISTICS Typical Values: (T_A = 25°C unless otherwise specified)																MANUFACTURER
			Gate-to-Drain Voltage V_{GDO} (V)	Gate-to-Source Voltage V_{GSO} (V)	Gate Current I_G (mA)	Drain Current I_D (mA)	Total Dissipation P_D (mW)	Channel Temperature T_{ch} (°C)	Gate Leak Current Test Conditions	I_{GSS} (nA)	Gate to Drain Breakdown Voltage Test Conditions	$V_{(BR)GDO}$ (V)	Drain Current Test Conditions	I_{DSS} (mA)	Gate to Source Cutoff Voltage Test Conditions	$V_{GS(off)}$ (V)	Forward Transfer Admittance Test Conditions	$\lvert Y_{fs}\rvert$ (m℧)	Feed Back Capacitance Test Conditions	C_{rss} (pF)	Power Gain (Common Source) Test Conditions	G_{PS} (dB)	Noise Figure Test Conditions	NF (dB)	
2SK 104 (F)	AF, General	Si N-channel junction	−30	−30	10	20	250	125	V_{GS} = −30V V_{DS} = 0	−10 max.			V_{DS}=5V V_{GS}=0	1.0 ~ 3.0	V_{DS}=5V I_D =10μA	1.1	V_{DS}=5V I_D=0.5mA f = 1 kHz	2.1	V_{DS}=10V V_{GS}=0 f = 1 MHz	0.9					N E C

DIODES,LED'S

DEVICE TYPE	APPLICATIONS	STRUCTURE†	MAXIMUM RATINGS Absolute - Maximum Values: (T_A = 25°C unless otherwise specified)									ELECTRICAL CHARACTERISTICS Typical Values: (T_A = 25°C unless otherwise specified)							MANUFACTURER
			Reverse Surge Voltage V_{Rsurge} (V)	Peak Reverse Voltage V_{RM} (V)	Reverse Voltage V_R (V)	Peak Forward Voltage V_{FM} (V)	Peak Forward Current I_{FM} (mA)	Average Rectified Current I_O (mA)	Forward Surge Current $I_{F\,surge}$ (A)	Junction Temperature T_J (°C)	Total Power Dissipation P_D (mW)	Forward Current I_{Fmin} (mA)	Test Condition V_F (V)	Forward Voltage V_{Fmax} (V)	Test Condition I_F (mA)	Reverse Current I_{Rmax} (uA)	Test Condition V_R (V)	Others	
IK34A	Detector	Ge-Pc		75	60		150	50	0.5	70		5	1.0			20	10		UNIZON
1SS53	Medium speed switching	Si-EP		35	30		300	100	2	200	500			1.0	30	0.1	30		N E C
1SS55	Medium speed switching	Si-EP		100	75		300	100	2	200	500			1.0	30	0.1	75		N E C
DS448	Medium speed switching	Si-P		35	30		360	120	0.5	175	300			1.0	50	1.0	30		SANYO
GP20D-L	Rectifier	Si-DJ			200	200		2.0A	65	150				1.1	2.0A	5			GENERAL INSTRUMENT
TLG113A	Lamp (green)	GaP			4			I_F = 25 mA		75	100			2.8	20	5	4	I_V = 17.0 mcd (I_F = 15 mA)	TOSHIBA
TLR120	Lamp (red)	GaP			4			I_F = 20 mA		75	90			2.8	20	5	4	I_V = 4.0 mcd (I_F = 15 mA)	TOSHIBA
TLS113	Lamp (red)	GaAsP			4			I_F = 25 mA		75	100			2.8	20	100	4	I_V = 15.0 mcd (I_F = 15 mA)	TOSHIBA

ZENER DIODES

DEVICE TYPE	APPLICATIONS	STRUCTURE†	MAXIMUM RATINGS Absolute - Maximum Values: (T_A = 25°C unless otherwise specified)			ELECTRICAL CHARACTERISTICS Typical Values: (T_A = 25°C unless otherwise specified)														MANUFACTURER
			Total Power Dissipation P_D (mW)	Zener Current I_Z (A)	Junction Temperature T_J (°C)	Zener Voltage V_Z MIN (V)	TYP (V)	MAX (V)	Test Conditions I_Z (mA)	Differential Resistance r_Z TYP (Ω)	MAX (Ω)	Test Conditions I_Z (mA)	Temperature Coefficient γ_Z TYP (%/°C)	MAX (%/°C)	Test Conditions I_Z (mA)	Reverse Current I_Z MAX (μA)	Test Conditions V_R (V)	Others	
RD5.6-EB2	Regulator	Si-P	500		175	5.45		5.73	20		13	20				5	2.5		N E C
RD6.2-EB2	Regulator	Si-P	500		175	5.96		6.27	20		10	20				5	3.0		N E C
RD13-EB3	Regulator	Si-P	500		175	12.99		13.66	10		14	10				0.2	10		N E C
RD15-EB2	Regulator	Si-P	500		175	13.89		14.62	10		16	10				0.2	11		N E C
RD24-FBDB2	Regulator	Si-P	1000		175	23.17		24.36	10		16	10				10	19		N E C

www.hifiengine.com

INTEGRATED CIRCUITS STK-2029

FUNCTION/MANUFACTURER

- **Dual Audio Power Amplifier Output Stage/Sanyo**

ABSOLUTE MAXIMUM RATINGS (Ta=25°C)

ITEM	SYMBOL	CONDITION	RATING	UNIT
Supply Voltage	Vcc max.		±37	V
Junction Temperature	Tj		150	°C
Storage Temperature	Tstg		−30 ~ +105	°C
Short-Circuit Time Limit	Ts	Vcc=±25.5V, Po=25W, RL=8ohms, f=50Hz	2	sec.

ELECTRICAL CHARACTERISTICS (Ta=25°C, Vcc=±25.5V, RL=8ohms, Rg=600ohms, VG=26.3dB; unless otherwise noted)

ITEM	SYMBOL	CONDITION	MIN.	TYP.	MAX.	UNIT
Idling Current	Icco	Vcc=±31V	20	40	80	mA
Output Power	Po (1)	f=20 ~ 20kHz, THD=0.02%	25			W
Total Harmonic Distortion	THD	f=20 ~ 20kHz, Po=1 ~ 25W			0.02	%

EQUIVALENT CIRCUIT

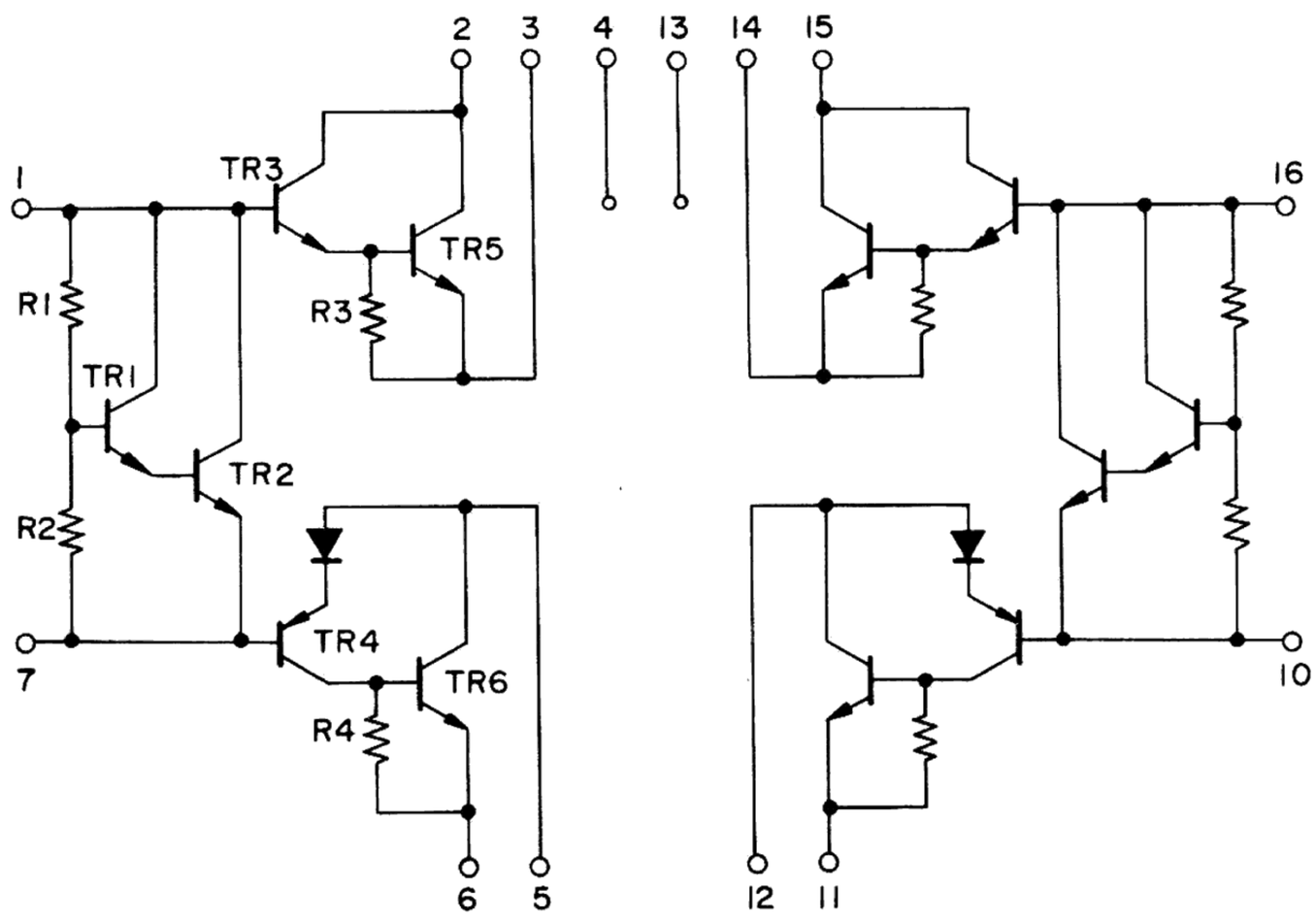

EXTERNAL VIEW

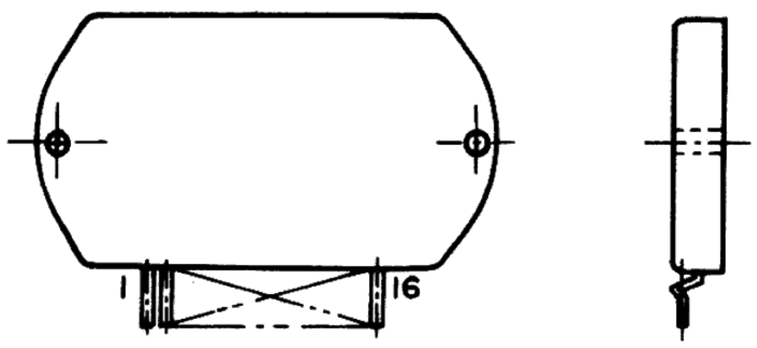

www.hifiengine.com

LSI μPD1703C-018

FUNCTION/MANUFACTURER

■ **PLL Synthesizer & Controller for AM/FM Tuner/NEC**

Absolute Maximum Ratings (Ta=25±2°C)

ITEM	SYMBOL	RATING	UNIT
Supply Voltage	V_{DD}	−0.3 ~ +0.6	V
Input Voltage	V_I	−0.3 ~ +V_{DD}	V
Output Voltage	V_O	−0.3 ~ +V_{DD}	V
Output Current	I_O	10	mA
Maximum Output Voltage	V_{BDS}	−35	V
Operating Temperature	Topt	−35 ~ +75	°C
Storage Temperature	Tstg	−55 ~ +125	°C

PIN CONFIGULATION (TOP VIEW)

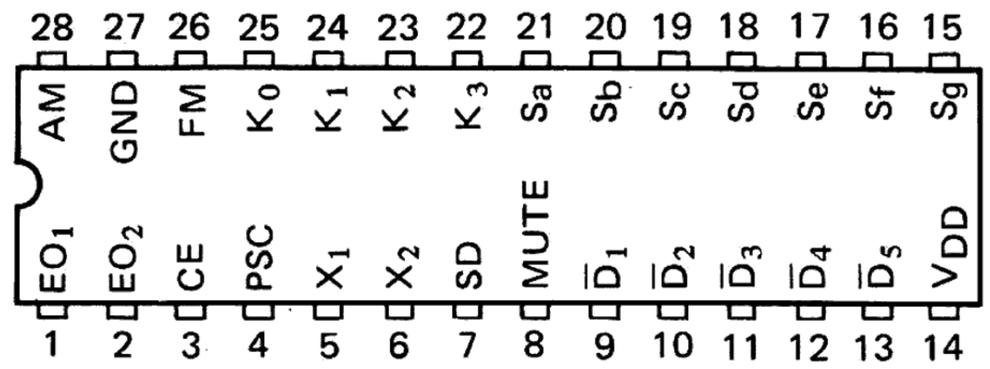

PIN DESCRIPTION

PIN #	SYMBOL	NAME AND FUNCTION
1	EO_1	Phase Detector Outputs; These pins are the charge pump outputs.
2	EO_2	
3	CE	Chip Enable Input.
4	PSC	Prescaler Control Output.
5	X_1	Crystal Oscillator Inputs; Connect 4.5 MHz quartz crystal.
6	X_2	
7	SD	Auto Tuning Stop Input.
8	MUTE	Muting Output.
9	$\bar{D}_1$	Digit Outputs
10	$\bar{D}_2$	
11	$\bar{D}_3$	
12	$\bar{D}_4$	
13	$\bar{D}_5$	
14	V_{DD}	Power Supply; +5V ± 0.5V
15	Sg	Segment Outputs
16	Sf	
17	Se	
18	Sd	
19	Sc	
20	Sb	
21	Sa	
22	K_3	Key Return Signal Inputs
23	K_2	
24	K_1	
25	K_0	
26	FM	FM Local Oscillator Signal Input
27	GND	OV Power Supply
28	AM	AM Local Oscillator Signal Input

www.hifiengine.com

INTEGRATED CIRCUIT μPB553AC

FUNCTION/MANUFACTURER

- **Prescaler/NEC**

BLOCK DIAGRAM & CONNECTION INFORMATION

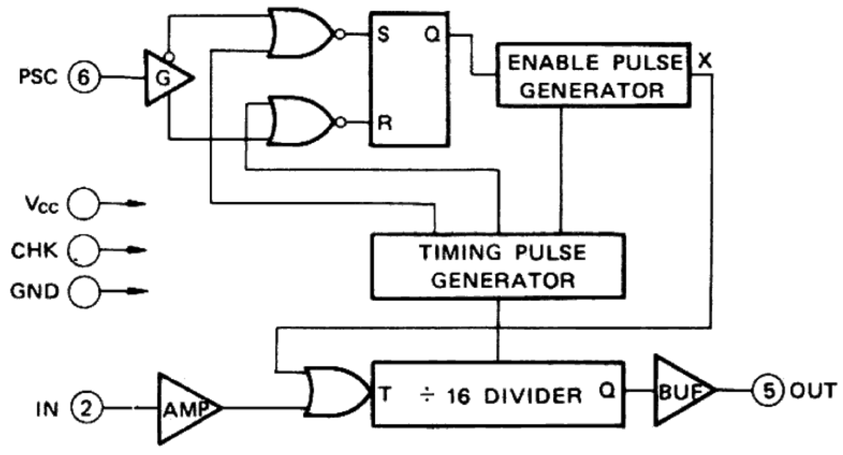

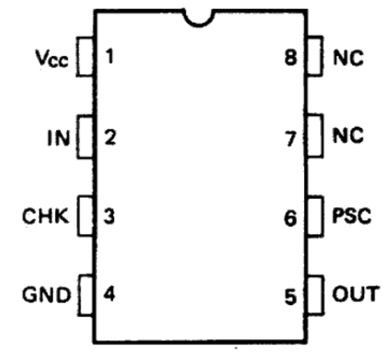

INTEGRATED CIRCUIT μPC1018C

FUNCTION/MANUFACTURER

- **FM-AM Radio Receiver System/NEC**

EQUIVALENT CIRCUIT & CONNECTION INFORMATION

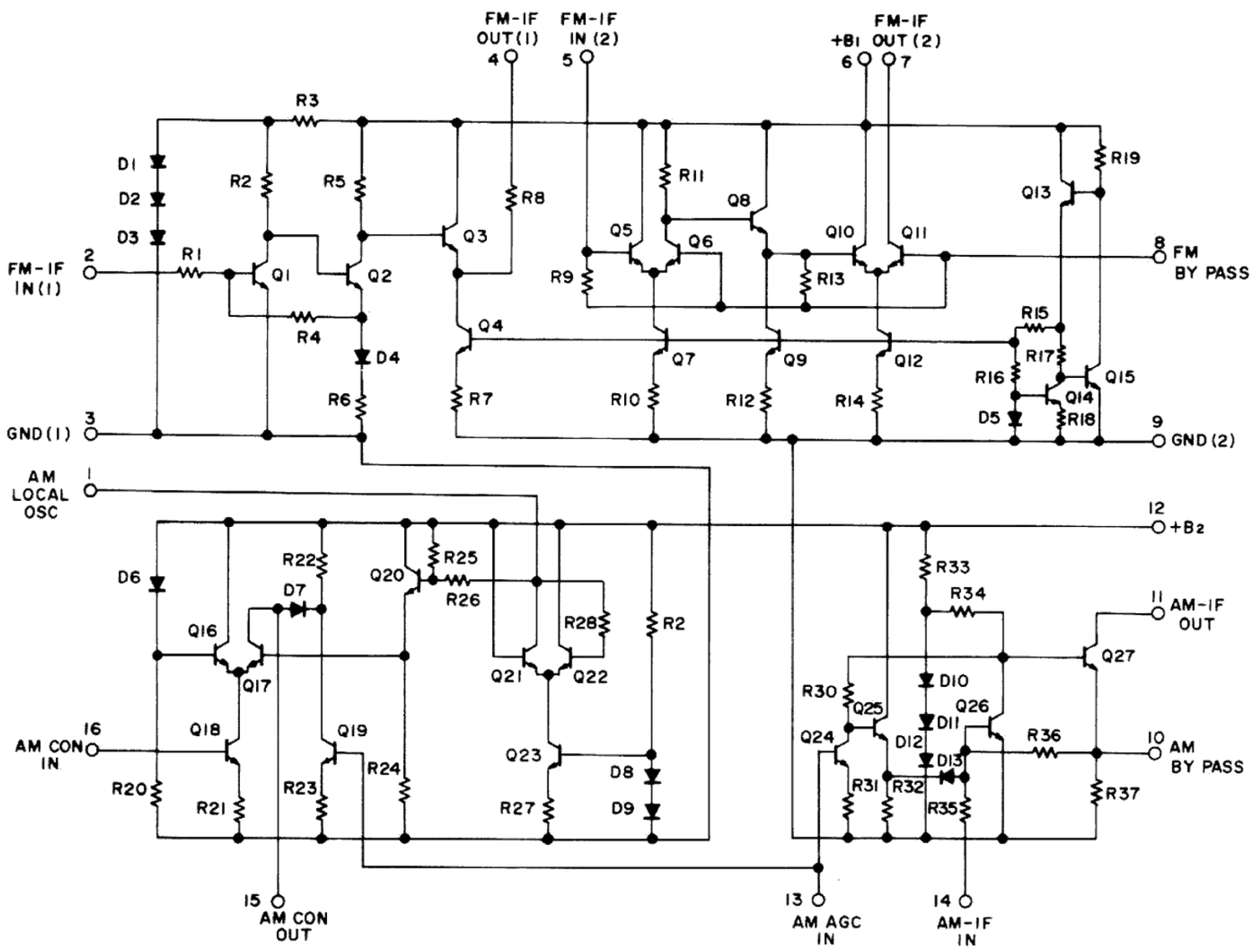

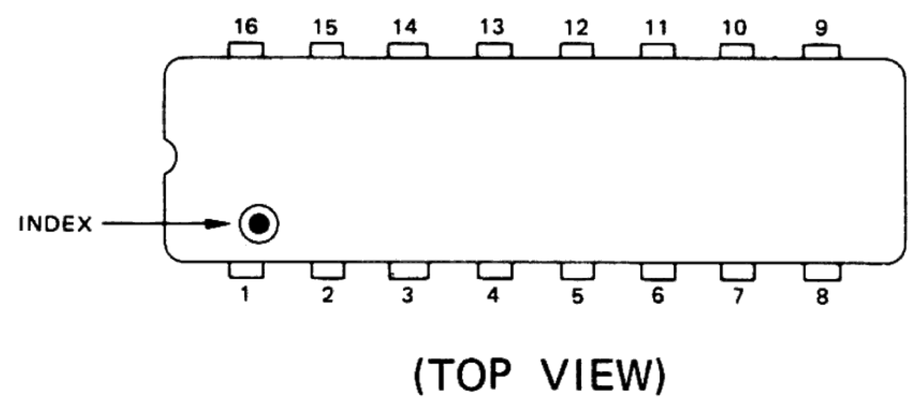

INTEGRATED CIRCUIT μPC1161C3

FUNCTION/MANUFACTURER

- **FM Stereo Demodulator/NEC**

BLOCK DIAGRAM & CONNECTION INFORMATION

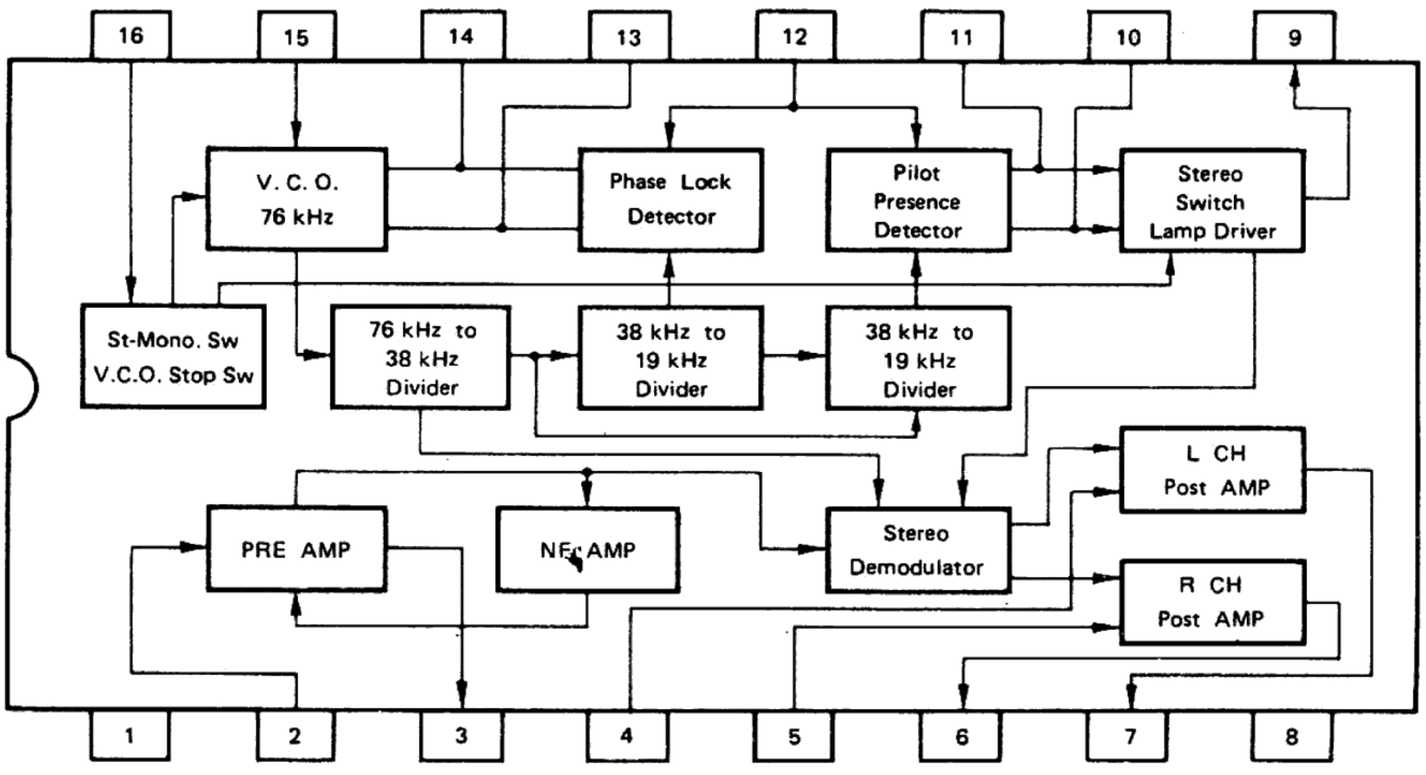

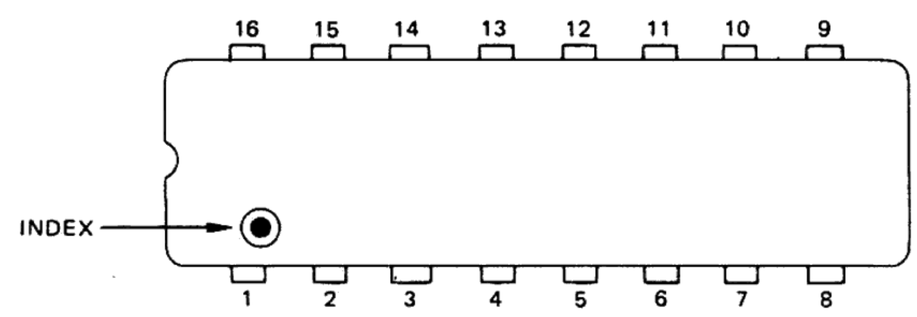

(TOP VIEW)

www.hifiengine.com

INTEGRATED CIRCUIT HA11225

FUNCTION/MANUFACTURER

- FM-IF System/Hitachi

BLOCK DIAGRAM & CONNECTION INFORMATION

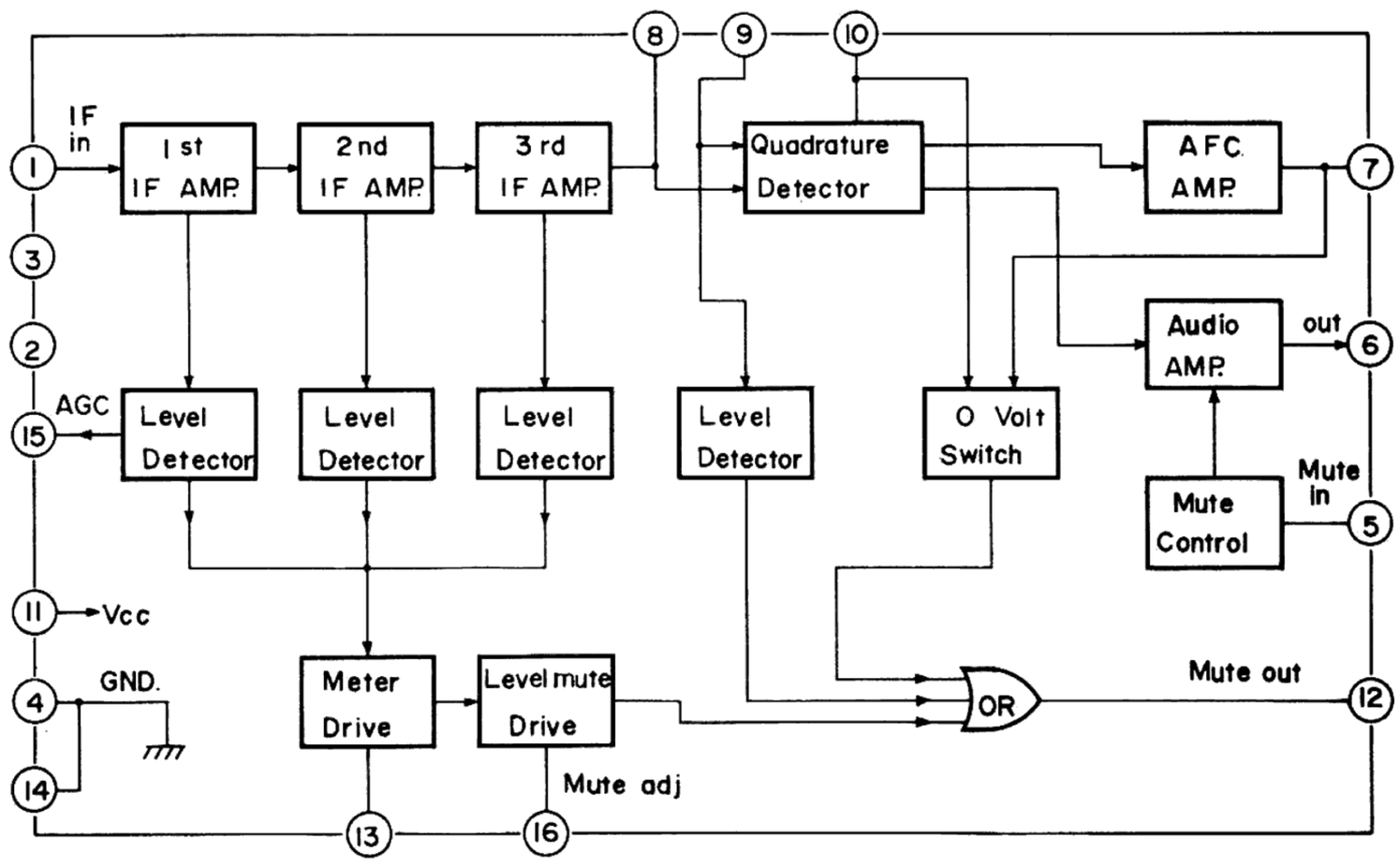

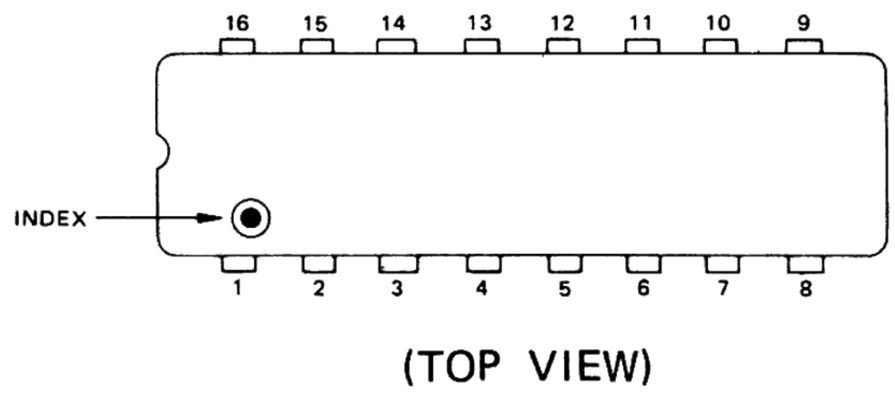

(TOP VIEW)

INTEGRATED CIRCUIT TL4558PA

FUNCTION/MANUFACTURER

- Dual Operational Amplifier/Texas Instruments

EQUIVALENT CIRCUIT & CONNECTION INFORMATION

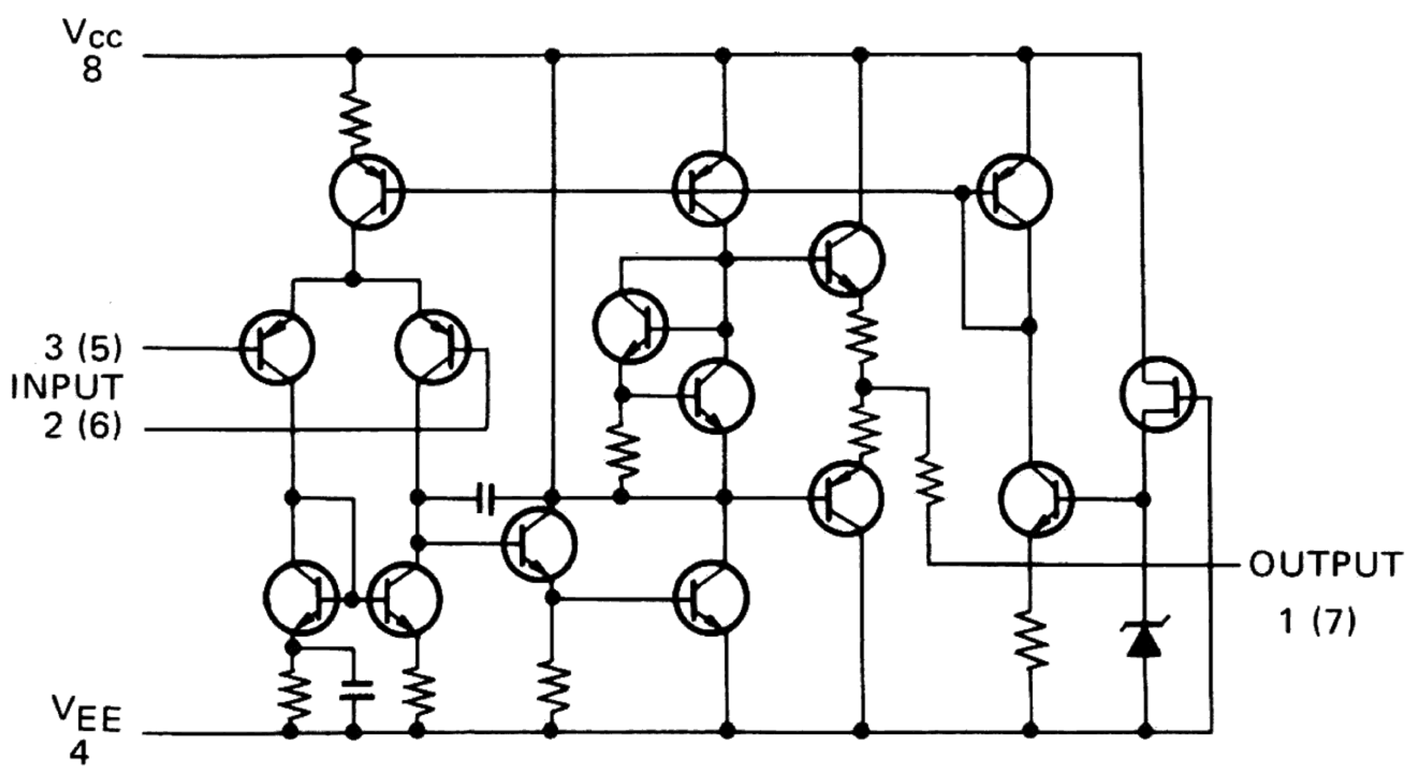

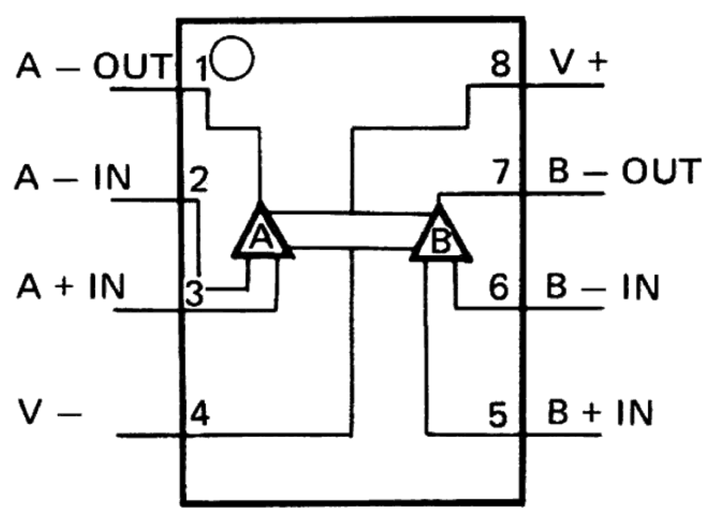

(TOP VIEW)

INTEGRATED CIRCUIT μPA80C

FUNCTION/MANUFACTURER

- Transistor Array/NEC

EQUIVALENT CIRCUIT & CONNECTION INFORMATION

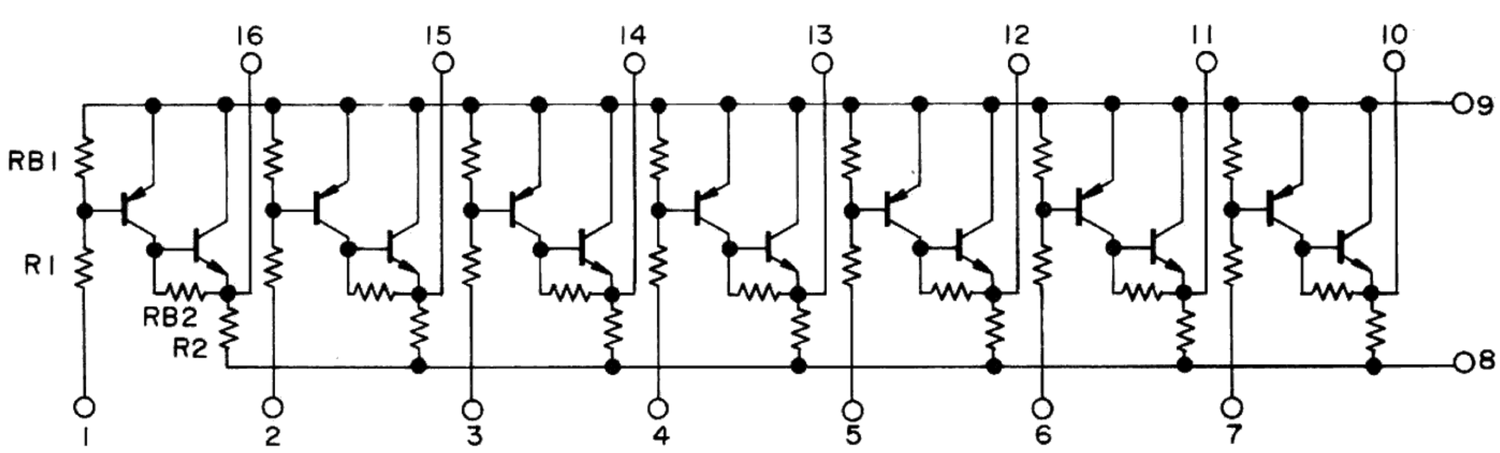

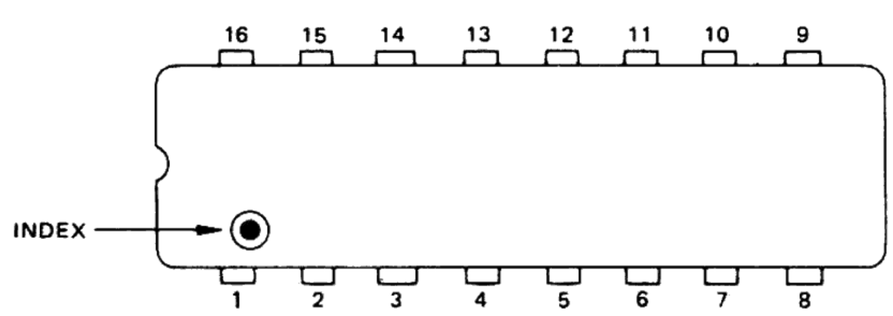

(TOP VIEW)

www.hifiengine.com

SCHEMATIC DIAGRAM

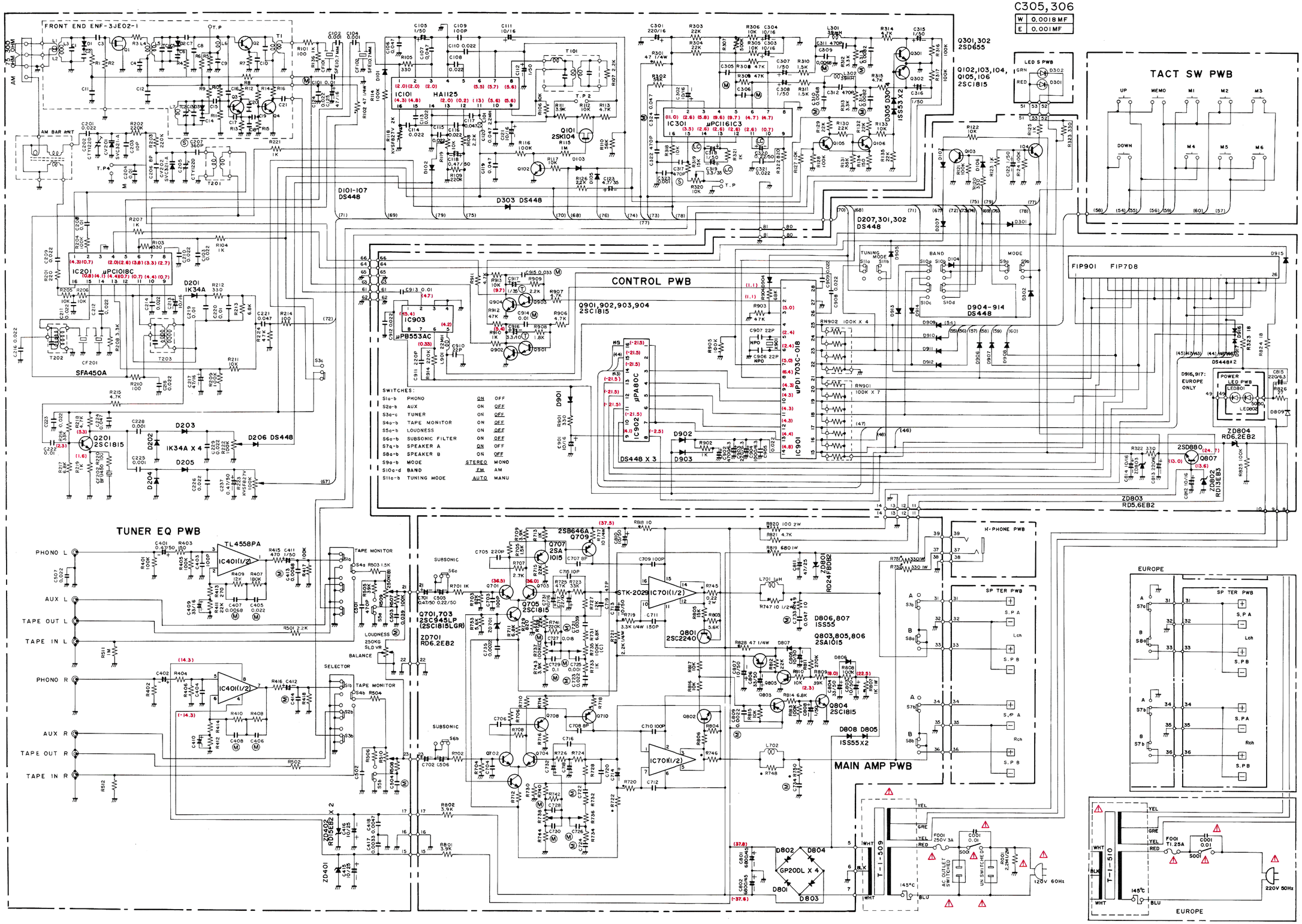

C305,306

W	0.0018MF
E	0.001MF

SEMICONDUCTORS

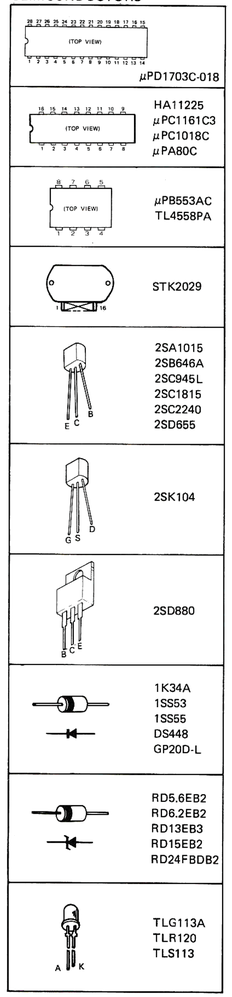

NOTES:

1. SCHEMATIC IS SUBJECT TO CHANGE WITHOUT NOTICE.

UNLESS OTHERWISE SPECIFIED:

2. RESISTANCE VALUES ARE IN OHMS. K=1,000 ; M=1,000,000
3. CAPACITANCE VALUES 1.0 AND ABOVE ARE IN pF OR μF (P=pF, M=μF), LESS THAN 1.0 ARE IN μF. (ELECTROLYTIC CAPACITANCE VALUES ARE IN μF/WV.)
4. VOLTAGES ARE MEASURED TO CHASSIS GROUND WITH A "DC VOLTMETER".

SCHEMATIC SYMBOLS:

(M) POLYESTER FILM CAPACITOR
(S) POLYSTYRENE FILM CAPACITOR
(LC) LOW CURRENT LEAKAGE ELECTROLYTIC CAPACITOR
(NO MARK) CERAMIC CAPACITOR
• NONFLAMMABLE RESISTOR

SERVICE INFORMATION:

CAUTION: REFER SERVICING TO QUALIFIED SERVICE PERSONNEL.

1. EACH PRECAUTION TO BE FOLLOWED DURING SERVICING.
2. ⚠ INDICATES SAFETY CRITICAL COMPONENTS FOR CONTINUED SAFETY. REPLACE SAFETY CRITICAL COMPONENTS ONLY WITH MANUFACTURER'S RECOMMENDED PARTS.
3. BEFORE RETURNING THIS APPLIANCE TO THE CUSTOMER, YOU MAKE LEAKAGE-CURRENT OR RESISTANCE MEASUREMENTS TO DETERMINE THAT EXPOSED PARTS ARE ACCEPTABLY INSULATED FROM THE SUPPLY CIRCUIT.

NIKKO ELECTRIC MFG. CO., LTD.
4-1, Okusawa 3-chome, Setagaya-ku, Tokyo 158, Japan

NIKKO ELECTRIC CORP. OF AMERICA
HEAD OFFICE
7801 East Compton Blvd., Paramount, Ca. 90723, U.S.A.
N.Y. OFFICE
320 Oser Ave., Hauppauge, N.Y. 11787, U.S.A.

965223E 82. Sep. 1,500 Printed in Japan

www.hifiengine.com