SCHEMATIC DIAGRAM STA-501S

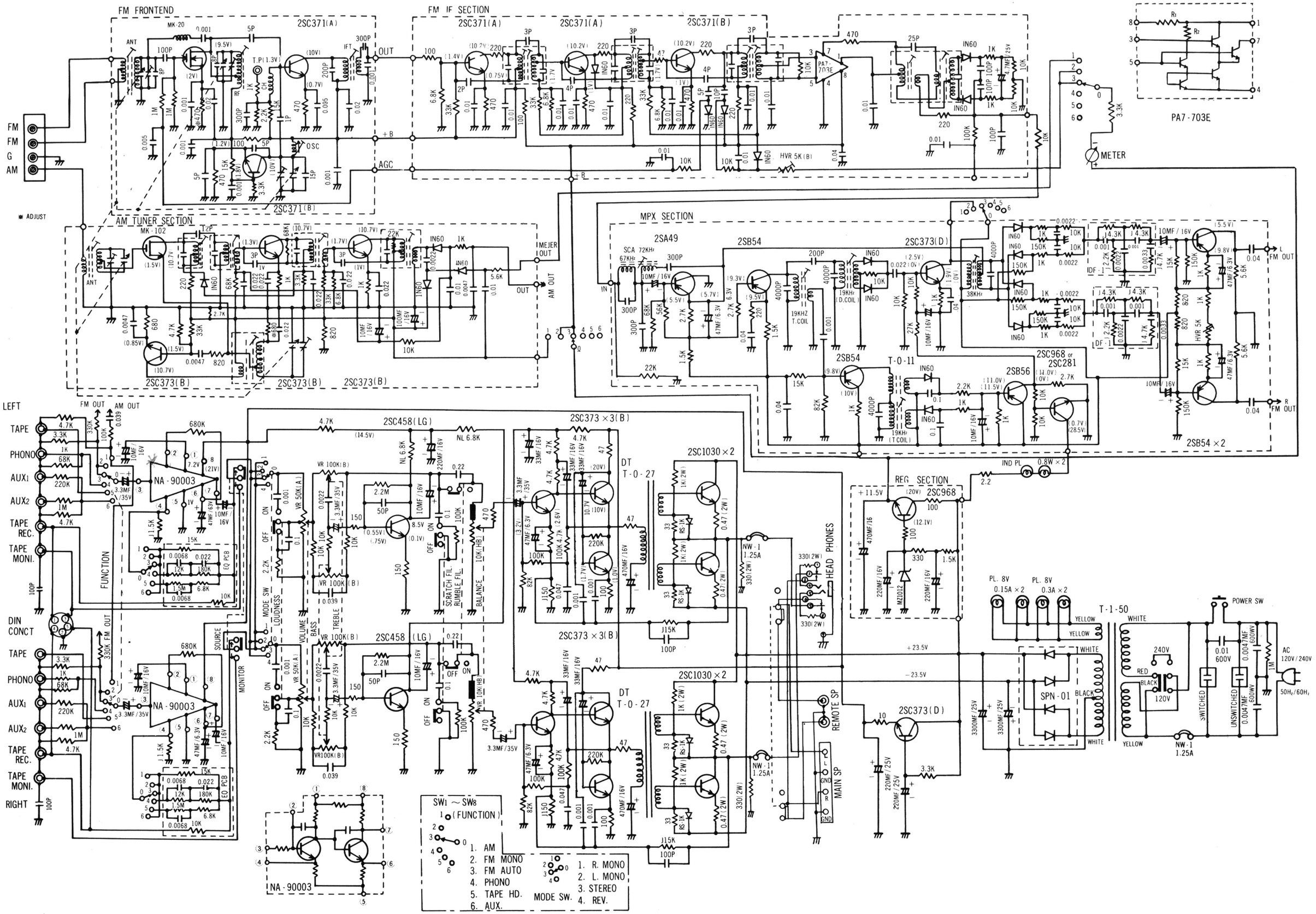

SCHEMATIC DIAGRAM

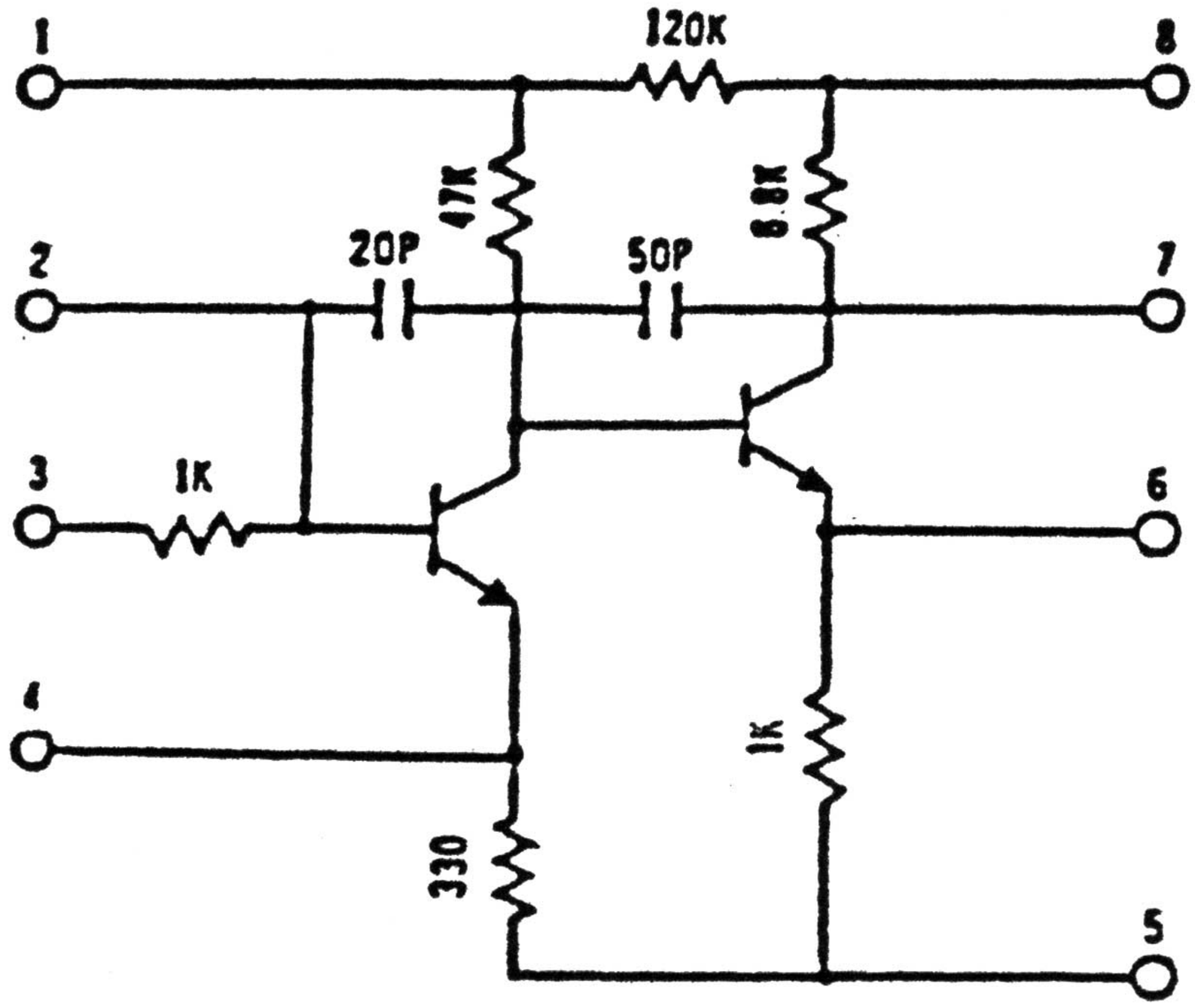

CONNECTION DIAGRAM

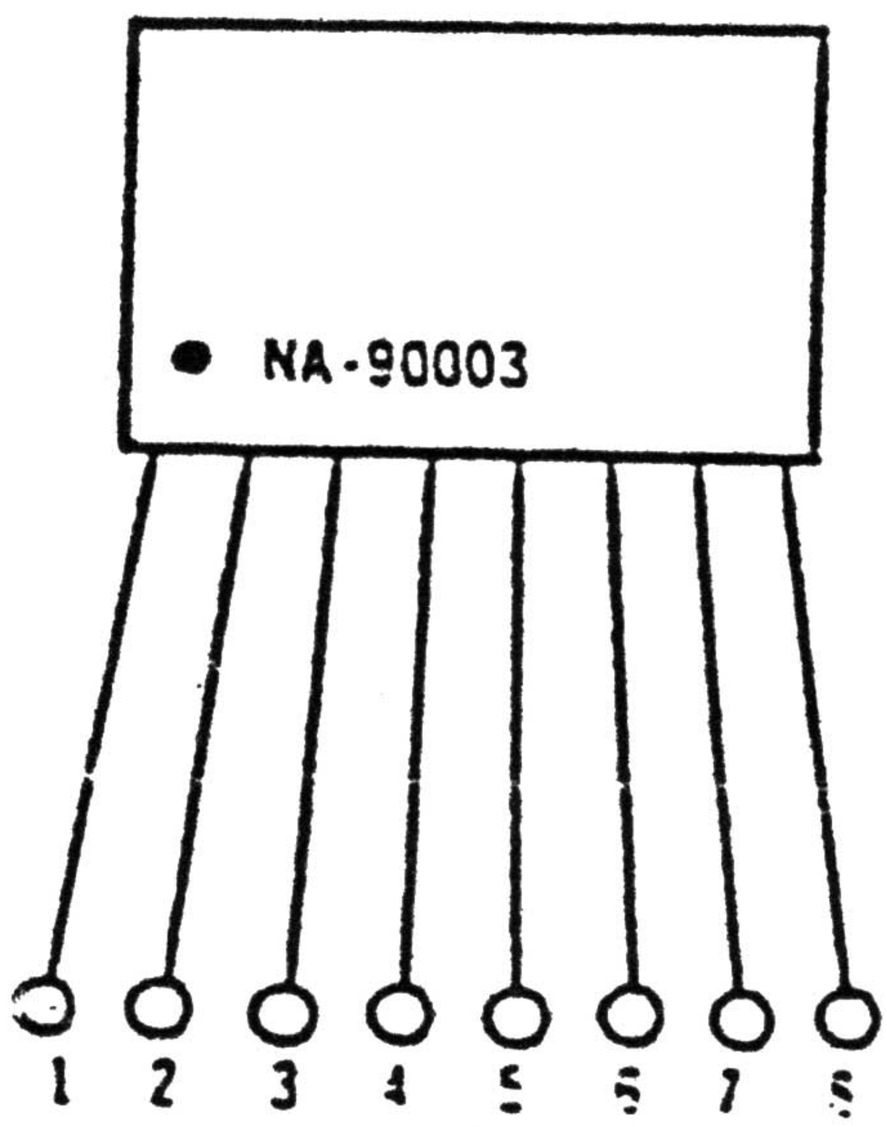

PARTS LIST

Q-1, 2	2SC 1845	R-4	1k ohm ½ watt
C-1	20 PF/50 V.D.C. Ceramic	R-5	1k ohm ½ watt
C-2	50 PF/50 V.D.C. Ceramic	R-6	330 ohm ½ watt
R-1	120k ohm ½ watt		
R-2	47k ohm ½ watt		
R-3	6.8k ohm ½ watt		

www.hifiengine.com