SCHEMATIC DIAGRAM TRM - 500

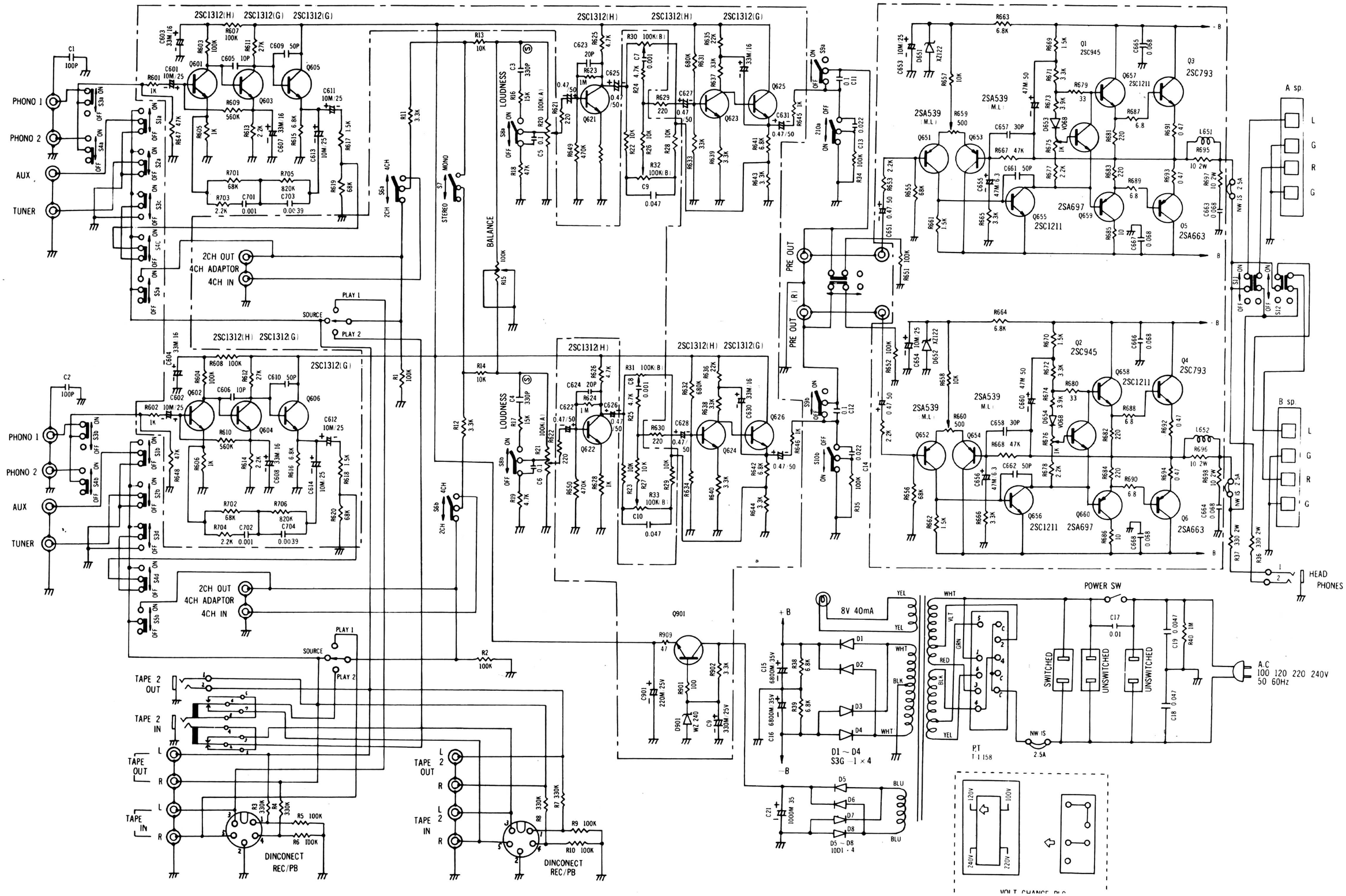

B073 C 9949