Compact Disc Player CDC263/01

CDC265/01

Service
Service
Service

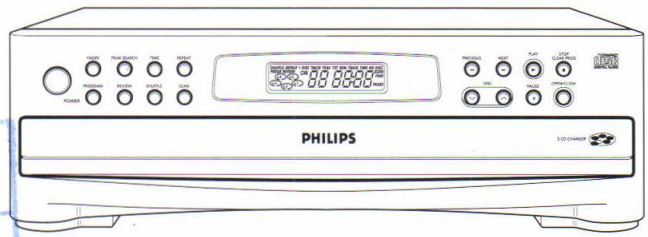

Service Manual

Table Of Content : **Page**

Published by Consumer Electronics Printed in The Netherlands Subject to modification 4822 725 25162

PHILIPS

PHILIPS

PCS 64 476

SPECIFICATION

GENERAL

Mains voltage	:	Switchable 120V/230V
Mains frequency	:	50-60Hz
Power consumption (max)	:	12W
Dimension (W x D x H)	:	360 x 116 x 390mm
Weight	:	4.965kg

LINE OUTPUT

Number of channels	:	2
Output voltage	:	2 Vrms ±2dB
Unbalance left-right	:	max. 2dB
Output resistance	:	1kΩ
Frequency response	:	Max. ± 1.0dB from20Hz to 20kHz
Signal to noise ratio	:	min. 80dB from 20Hz to 20kHz
Total harmonic distortion	:	0.5% from 20Hz to 20kHz
Out-band attenuation	:	min. 35dB above 40kHz
Channel separation	:	min. 70dB from 20Hz to 20kHz
Automatic switched deemphasis with time constant	:	15/50 µs

OPTICAL READ-OUT SYSTEM

Laser type	:	Semiconductor AlGaAs
Wavelength	:	780nm ±20nm
Light output (c.w.)	:	max. 0.5mW

INSTALLATION

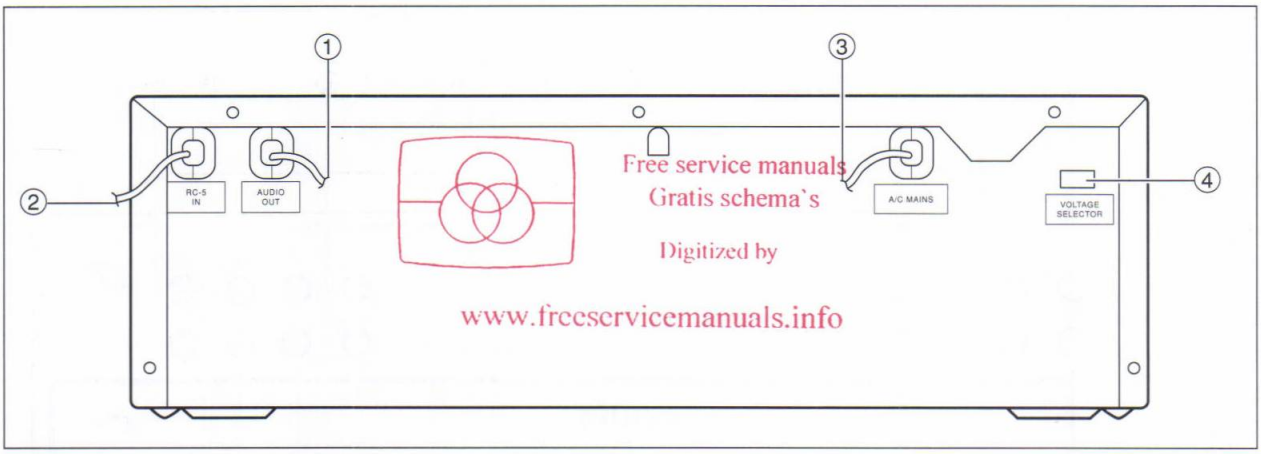

POWER SUPPLY SETTING

- Check that the type plate on the rear of your changer indicates the correct power voltage.
- If your power supply voltage is different, consult your dealer or an Authorized Philips Service Center.

PLACING THE COMPACT DISC CHANGER

Free standing

- Always position the changer horizontally on a flat, firm surface.
- Allow a free space of at least 3 cm above the changer so as not to interfere with the cooling of the changer.

In an audio rack

- The changer can be sited in any desired position.

Stacked

- Site the changer preferably at the bottom or at the top.
- Never position the changer directly on top of a high-power amplifier/receiver, as such an amplifier/receiver gives off a substantial amount of heat.

CONNECTIONS

1 **AUDIO OUT**
For the connecting cable to the amplifier or HiFi system.
- Insert a red plug into the 'R' jack and the other plug into the 'L' jack of the CD or AUX input of your amplifier or HiFi system.
- You can also use the TUNER or TAPE IN connection, but ***never*** the PHONO input!

2 **RC5-IN (Remote In)** *(for CDC263 only)*
For connecting up the equipment when you are incorporating the player in the amplifier or HiFi system with RC5.

3 **Main Supply Cable**

4 **Voltage selector *(not all versions)***
Use a screw driver or something similar to set the voltage selector to the local voltage.

Important notes for users in the U.K.:

Mains Plug
This apparatus is fitted with an approved moulded 13 Amp plug.
To change a fuse in this type of plug proceed as follows:
- Remove fuse cover and fuse.
- Fix new fuse which should be a BS1362 5 A, A.S.T.A. or BSI approved type.
- Refit the fuse cover.

If the fitted plug is not suitable for your socket outlets, it should be cut off and an appropriate plug fitted in its place.
If the mains plug contains a fuse, this should have a value of 5 A. If a plug without a fuse is used, the fuse at the distribution board should not be greater than 5 A.

Note:
The severed plug must be destroyed to avoid a possible shock hazard should it be inserted into a 13 A socket elsewhere.

How to connect a plug
The wires in the mains lead are coloured with the following code:
blue = neutral (N), brown = live. (L)
As these colours may not correspond with the colour markings identifying the terminals in your plug, proceed as follows:
- Connect the blue wire to the terminal marked N or coloured black.
- Connect the brown wire to the terminal marked L or coloured red.
- Do not connect either wire to the earth terminal in the plug, marked E (or e) or coloured green (or green and yellow).

Before replacing the plug cover, make certain that the cord grip is clamped over the sheath of the lead – not simply over the two wires.

Copyright:
Recording and playback of material may require consent. See Copyright Act 1956 and The Performer's Protection Acts 1958 to 1972.

FUNCTIONAL OVERVIEW

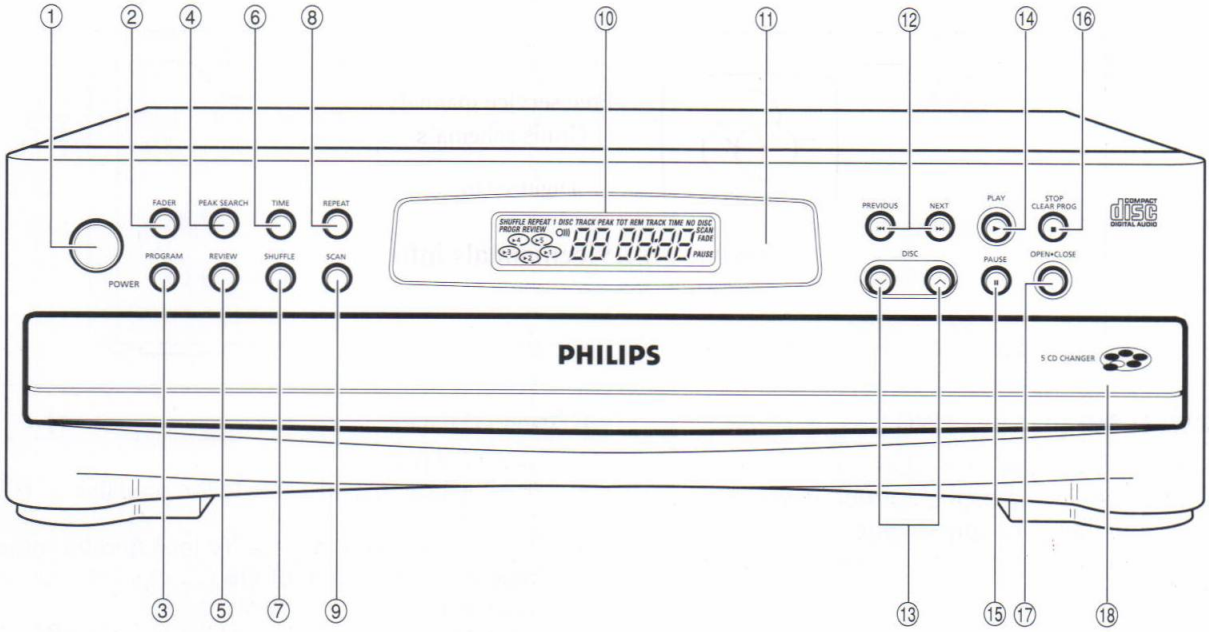

FRONT OF CHANGER

1 **POWER** – Switching on and off.
2 **FADER** – Fading in and out during play.
3 **PROGRAM** – Opening and storing the memory when compiling a program.
4 **PEAK SEARCH** – Searching for the loudest passage (peak) on a CD or in a program when making a tape recording.
5 **REVIEW** – Checking a program.
6 **TIME** – Selecting the information you want to see on the display.
7 **SHUFFLE** – Playing in random order.
8 **REPEAT** – Repeating play.
9 **SCAN** – Automatically playing the beginning of each track.
10 **Display** – Informs you about the functioning of the player.
11 **I**(nfra) **R**(ed) **SENSOR** ***(CDC265 only)*** – Receives the signals from the remote control.
12 **PREVIOUS** ∞ / **NEXT** ⏭
– Selecting previous/next track or passage.
13 **DISC** ⌃ / ⌄
– Selecting another CD and when compiling a program.
14 **PLAY** ▶ – Starting play.
15 **PAUSE** ❚❚ – Interrupting play.
16 **STOP** ■ **/CLEAR PROG**
– Stopping play.
– Erasing a program
17 **OPEN•CLOSE** – Opening and closing the CD tray.
18 **CD TRAY:** for compact disc.

Inside the CD tray

19 **QUICK PLAY** – Immediate playing of a particular CD.
20 **LOAD** – Rotating the turntable in the CD compartment when inserting CDs.

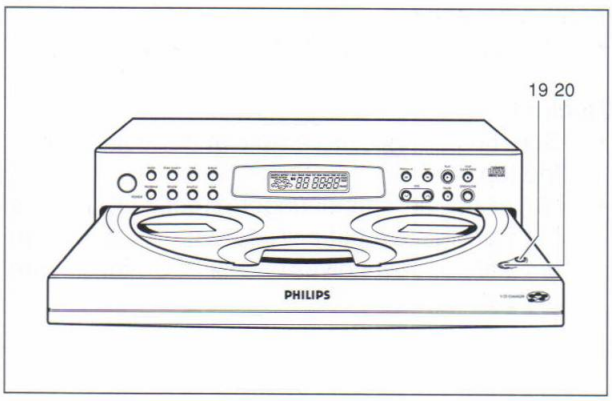

FUNCTIONAL OVERVIEW

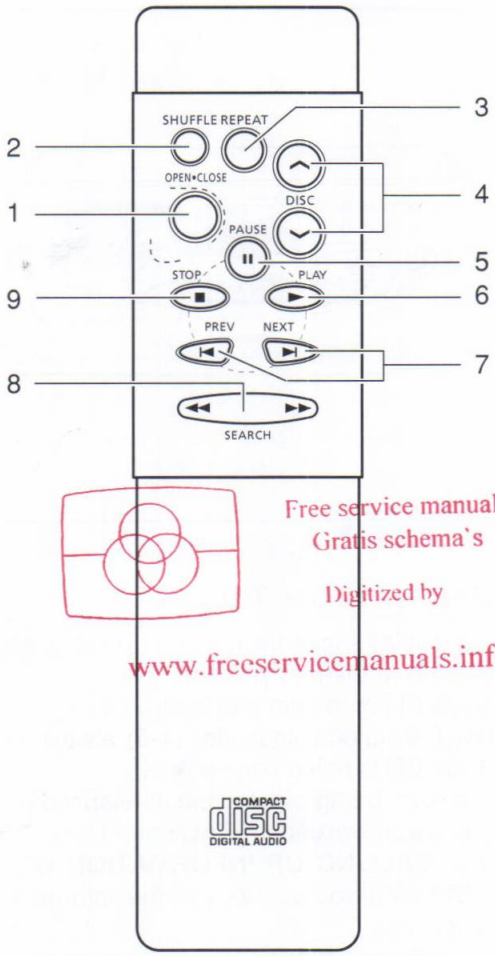

REMOTE CONTROL *(for CDC265 only)*

1 **OPEN•CLOSE**
Opening and closing the CD compartment.

2 **SHUFFLE**
Playing in random order.

3 **REPEAT**
Repeating play.

4 **DISC ⌃ / ⌄**
Selecting the previous or next disc.

5 **PAUSE ❚❚**
Interrupting play .

6 **PLAY ▶**
Starting play.

7 **NEXT ▶❙ / PREV ❙◀**
To select the next or previous track.

8 **SEARCH ◀◀ / ▶▶**
Fast search to a particular passage during play.

9 **STOP ■**
Stopping.

DISPLAY

1 O))) – Lights up when the changer receives a command from the remote control.

2 **SHUFFLE** – Lights up when the tracks are played in random order.

3 **PROGR** – Flashes when a program is being compiled.
– Lights up when a program is being played.

4 **REPEAT 1** – Lights up when you repeat a track.

5 **REPEAT DISC** – Lights up when you repeat a CD.

6 **REPEAT** – Lights up when you repeat all CD's or a programme from them.

7 **1–5 CD NUMBER INDICATOR**
– Flashes when you switch the changer on.
– Indicates the number of CDs in the CD tray.
– Indicates what CD is being played.

8 **REVIEW** – Lights up when checking a program.

9 **TRACK** – Indicates:
– what track is being played;
– the number of tracks on the CD or in a program.

10 **PEAK** – Lights up when searching for the loudest passage.

11 **TRACK TIME** – Indicates the elapsed playing time of the track being played.

12 **REM**(aining) **TRACK TIME** – Indicates the remaining playing time of the track being played.

13 **TOT**(al) **REM**(aining) **TIME** – Indicates the remaining playing time of a CD.

14 **TOT**(al) **TIME** – Indicates the total playing time of a CD.

15 **NO DISC** – Lights up when there are no CDs in the CD compartment.

16 **SCAN** – Lights up when CD's contents list is being scanned.

17 **FADE** – Lights up when fading in and out during play.

18 **PAUSE** – Lights up when play is interrupted.

Display messages:

Lights up when you try to activate a function for which you must first start play.

Lights up when you try to activate a function for which you must first stop play.

PLAY MODE

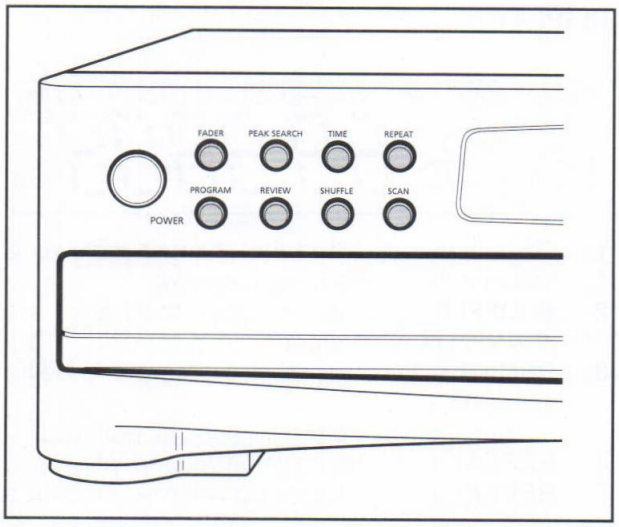

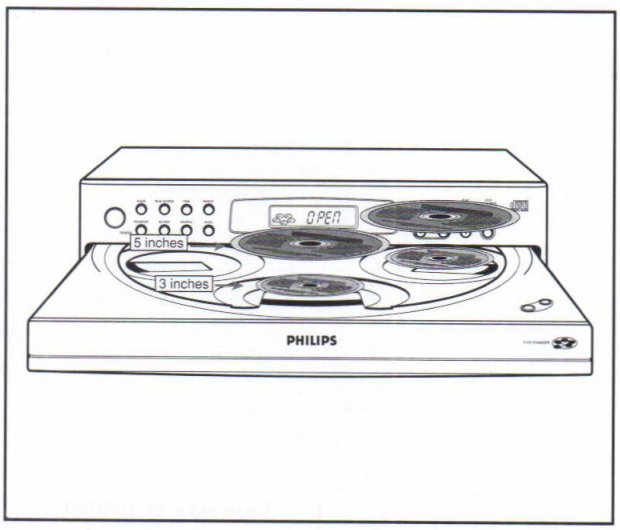

INSERTING THE CDs

NOTE! *Use only audio CDs; do not use CD-ROM, CD-I or CDV. You can load up to 5 discs with the CD changer for continuous play without interruption. You can see the display of the selected or current disc on the display panel. The 5 disc tray in the CD changer can be used to play 5" (12 cm) disc; it can also be used for 3" (8 cm) disc without any adaptor.*

- Press POWER to switch the changer on.
- – The changer will now start CD detection to check how many CDs there are in the CD compartment. The turntable will rotate slowly until all positions (1–5) in the CD compartment have been checked.
- – The position which is being checked is always shown on the display *(DISC X)*.
- – After CD detection the 1-5 CD number indicator will show the number of CDs in the CD compartment.
- Open the CD compartment by pressing OPEN•CLOSE.
- – *OPEN* lights up.
- Insert the CDs, ***printed side up;*** use the LOAD button to rotate the turntable in the CD compartment.
- Close the compartment by pressing OPEN•CLOSE.
- – *CLOSE* lights up. The changer will start CD detection again.

NOTE!

- – During the disc detection, do not press any buttons as the disc detection will stop immediately and the display will give an incorrect indication of the number of CDs in the CD compartment.
- – ***Always*** remove all CDs from the CD compartment if you want to transport the changer.

NORMAL PLAYBACK (PLAY)

- – The display shows the number of the current disc which is in the play position.
- Press PLAY to start playback.
- – The CD number indicator (1-5) always shows which CD is being played (▶ X).
  The track being played and its elapsed playing time are shown under TRACK and TRACK TIME. See **'CALLING UP INFORMATION ON THE DISPLAY'** if you wish to see other information on the display.
- – Play will stop after all CDs have been played.
- Press POWER to switch the changer off.

NOTE!

- – You can also press PLAY immediately after inserting the CDs; the compartment then closes automatically.
- – You can interrupt playback by pressing PAUSE. PAUSE then lights up. Press PLAY or PAUSE to restart.
- – If you press PLAY during playback, playback is interrupted and PAUSE lights up.
- – You can stop playback by pressing STOP/ CLEAR PROG.
- – If you press OPEN•CLOSE *during play*, the CD compartment will open while play continues.

CD PLAY WHILE LOADING

- During play mode press OPEN•CLOSE to draw open the CD compartment.
  The three CDs outside the chamber may now be changed without playback being interrupted.
- Load in the CDs into the CD compartment.
- Close the CD compartment by pressing OPEN•CLOSE again.

PLAY•SEARCH•SCAN•SHUFFLE

NOTE!
- No disc detection will be made during PLAY mode.
- The CD number indicator (1-5) will not show the correct information.

STARTING WITH QUICK PLAY

- Load CD onto the PREFERRED POSITION (Marked on the CD tray) and then start play by pressing QUICK PLAY.
- CD compartment will close now, and the insert CD will start playing.

NOTE!
- *No disc detection will be made during QUICK PLAY.*
- The CD number indicator (1-5) will not show the correct information.

SELECTING ANOTHER TRACK DURING PLAY (∞ / ▶▶|)

- Press NEXT ▶▶| (or PREVIOUS ∞) until the required track number appears in the display.
  - Shortly after this, the chosen track will start playing.

SELECTING ANOTHER CD DURING PLAY (∧ / ∨)

- Press DISC ∧ (or DISC ∨) until the required CD number appears in the display.
  - Shortly after this, the chosen CD will start playing.

SEARCHING FOR A PASSAGE DURING PLAY (∞ ▶▶|)

- Hold PREVIOUS ∞ down to search backwards to the beginning.
- Hold NEXT ▶▶| down to search forwards to the end.

The searching speed is determined by how long a key is pressed.
- the first 2 seconds fairly slowly, with sound;
- then at the maximum speed, with no sound.

If you reach the end of the last track and release ▶▶|, play will resume a few seconds before the end of the CD.

STARTING WITH A PARTICULAR CD (∧ ∨)

- Press DISC ∧ (or DISC ∨) until the desiredCD disc appears in the display.
- If the CD tray was open, it will now close.
- Play starts from the selected CD.

STARTING WITH A PARTICULAR TRACK (∧ ∨)

- First select the number of the desired CD using DISC ∧ (or DISC ∨).
- Then select the (track) number by using NEXT ▶▶| or PREVIOUS ∞ *(press less than 0.5 second).*
- Play starts from the selected track.

SCANNING CDs (SCAN)

All CDs:
- Press SCAN before or during play.
- If the CD compartment was open, it will now close.
- *SCAN* lights up and the first 8 seconds of each track are played in turn (starting from the current track). 8 seconds are counted down each time under REM(aining) TRACK TIME.
- When the player reaches a track which you wish to hear in full, press SCAN again.

One CD:
- Select the number of the required CD using DISC ∧ (or DISC ∨).
- Press SCAN, ***within the time*** the CD number is flashing on the display.
- Now only the first 8 seconds of each track on the selected CD will be played in turn.

PLAYING IN RANDOM ORDER (SHUFFLE)

All CDs:
- Press SHUFFLE before or during play.
- If the CD compartment was open, it will now close.
- SHUFFLE lights up and all the tracks are now played in a random order.
- If you press NEXT ▶▶|, you will select any one of the following tracks.
- Press SHUFFLE again if you wish to return to normal play.

NOTE!
If, during play, you open the CD compartment to change CDs (see 'NORMAL PLAYBACK') then play in random order will be cancelled. Play will stop as soon as the last track of the current CD has been played (in normal order).

One CD:
- Select the number of the required CD using DISC ∧ (or DISC ∨).
- Press SHUFFLE, ***within the time*** the CD number is flashing on the display.
- DISC and SHUFFLE light up; the tracks of the selected CD will now be played in a random order.
- If you press NEXT ▶▶|, you will select any one of the following tracks.

REPEAT•TIME•FADER

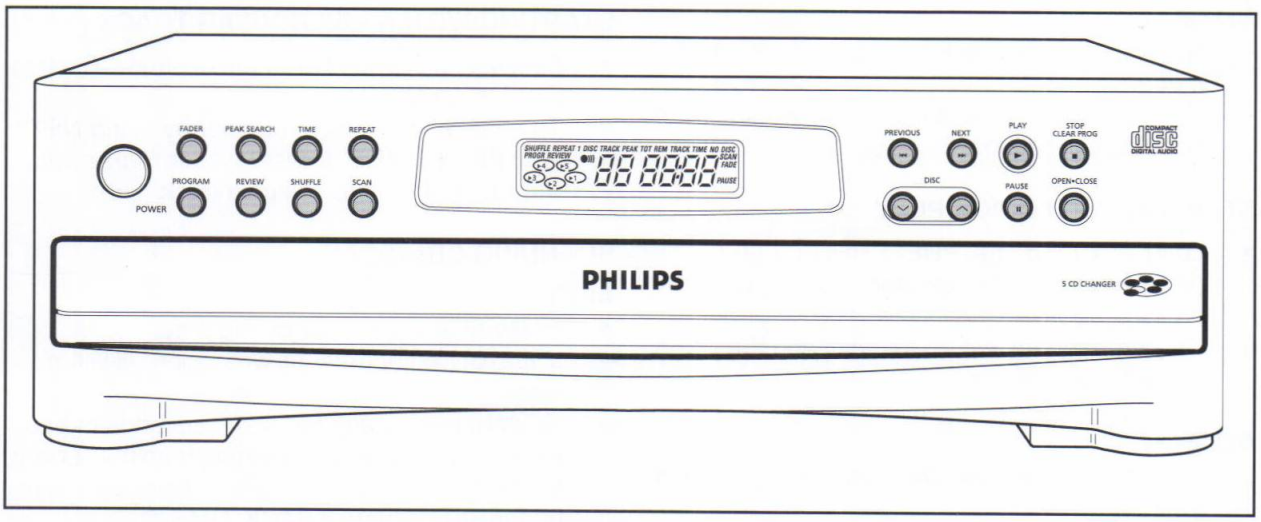

If you press REPEAT, the tracks will be repeated in a different order each time, although the first track will always be the same.

– When all tracks of the selected CD have been played, play stops.

• Press SHUFFLE again if you wish to return to normal play

REPEATING PLAY (REPEAT)

Repeating a track:

• Press REPEAT before or during play of the CD.

– REPEAT 1 lights up, the track will now be repeated continuously.

Repeating a CD:

• Press REPEAT *twice* before or during play of the CD.

– REPEAT DISC lights up, the CD will now be repeated continuously.

Repeating all CDs:

• Press REPEAT *thrice* before or during play.

– REPEAT lights up; the CDs will now be repeated continuously.

• Press REPEAT again to stop the CDs being repeated.

CALLING UP INFORMATION ON THE DISPLAY (TIME)

IN stop MODE:

Text display

– After loading the CDs and closing the CD compartment, the display shows the number of the CD to be played (= default display in STOP mode).

During play:

1. **Time display**

– When you start play (from STOP mode), the display shows the elapsed playing time of the current track (= default display in PLAY mode).

• Press TIME whenever you want to know the remaining playing time of the current track (REM TRACK TIME).

• Press time again if you wish to know the remaining playing time of the entire CD (TOT REM TIME). ***Note*** – TOT(al) REM(aining) TIME indication is *not* available in SHUFFLE mode.

• If you wish to know the total playing time of the CD, you must go back to STOP mode *first* and *then* press TIME.

– The display now shows the total number of tracks and the total playing time of the current CD (TOT TIME).

2. **Text display**

• If you press TIME again, you will switch to text display; the display shows the number of the current CD.

ACTIVATING THE FADE-IN AND FADE-OUT FUNCTION (FADER)

NOTE!

The FADER function can be used if the changer is connected to the amplifier or the system via the ANALOG OUT output or the DIGITAL OUT output.

• During play press FADER.

– The sound level will now gradually decrease (FADE OUT), after which the changer will go into the PAUSE mode.

• Press FADER again.

– Play continues and the sound level will increase again to the originally set level (FADE IN).

PEAK SEARCH•PROGRAMMING

SEARCHING FOR THE LOUDEST PASSAGE (PEAK SEARCH)

- In STOP mode, press PEAK SEARCH.
- – *SELECT DISC* lights up.
- Select the number of the required CD using DISC ∧ or DISC ∨.
- – The CD will now be scanned for the loudest passage (the peak).
- – The display shows the track being scanned and its elapsed playing time.
- – When the loudest passage has been found, it will be repeated continuously (from 2 seconds before the peak until 2 seconds after the peak).
- You can now adjust your recording device.
- You can stop the scan by pressing STOP/ CLEAR PROG.

NOTE!

- – When searching for the loudest passage in a programme, (from one or more CDs) there is no need to enter the CD number(s).
- – If you wish to record tracks from different CDs, you have to repeat peak search for each CD.

STORING A PROGRAM (PROGRAM)

- – By programming the changer, you can play up to 30 tracks in any required sequence.
- – *FULL* lights up if you exceed the maximum of 30 tracks.
- In STOP mode, press PROGRAM to open the memory.
- – *SELECT DISC* lights up and PROGRAM starts flashing.
- Select the number of the first required CD using DISC ∧ or DISC ∨.
- Select the required track numbers of the selected CD using the PREVIOUS ∞ or NEXT ⏭.
- Store the required track number by pressing PROGRAM.
- – Every track number you enter in this way will be included immediately in the program.
- – The display always shows the number of tracks and the total playing time of your program.
- If you wish to store tracks from another CD, you should first enter the number of the CD.
- Press STOP ■ to quit the PROGRAM mode.
- Press PLAY ▶ to play the program.

CHECKING THE PROGRAM (REVIEW)

- Press REVIEW prior to, during or after programmed play.
- – *REVIEW* lights up and all CD and track numbers appear in the programmed sequence on the display
- – Under TRACK TIME you will see the playing time of each track.

NO PROG will light up if no track numbers have been stored. With REVIEW you can proceed more rapidly to the next block of information.

PLAYING THE PROGRAM (PLAY ▶)

- Press PLAY ▶.
- – Play starts with the first number of the program.

The PROGRAM and PEAK SEARCH buttons *cannot* be used during programmed play.
Searching for a particular passage is only possible within the track being played.

ERASING A PROGRAM (STOP/CLEAR PROG ■ or OPEN•CLOSE)

In PLAY mode:

- Press OPEN•CLOSE or STOP/CLEAR PROG ■ *(twice)*.

In STOP mode:

- – Press OPEN•CLOSE, or STOP/CLEAR PROG ■.
- – The program has now been erased.

MAINTENANCE•RECYCLING

MAINTENANCE

The CDs

- Never write on the printed side of a CD.
- Do not attach any stickers to the CD.
- Keep the shiny surface of the disc clean. Use a soft, lint-free cloth, and always wipe the disc in a straight line from centre to edge.
- Never use cleaning agents for conventional records.
- Detergents or abrasive cleaning agents should not be used either.

The changer

- A chamois leather, slightly moistened with water, is sufficient for cleaning the changer.
- Do not use cleaning agents containing alcohol, spirits, ammonia or abrasives.

RECYCLING

Please observe the local regulations regarding the disposal of packing materials, exhausted batteries and old equipment.

1. All unnecessary packaging material has been omitted. We have done our utmost to make the packaging easily separable into two single materials:
   - – cardboard, buffer (paper pulp)
   - – polyethylene (bags, protective foam sheet)
2. Your set consists of materials which can be recycled if disassembled by a company that specializes in that area.
3. Do not dispose of exhausted batteries with your household waste.

TROUBLESHOOTING

If a fault occurs, run through the points listed below before taking your player for repair.
If the fault remains, try to clear it by switching the player off and on again. If this also fails to help, consult your dealer.
Under no circumstances should you repair the player yourself as this will invalidate the guarantee!

SYMPTOM	POSSIBLE CAUSE	REMEDY
– PLAY of the CD does not start or interruption of PLAY	– The CD has been loaded upside down. – No CD inserted. – The CD is badly scratched or dirty. – Moisture condensation on the lens.	• Reload the CD, label side up. • Insert a CD, label side up. • Clean the CD player with a soft, lint-free cloth. • Leave the CD player in a warm environment until the moisture evaporates.
– Sound skips (at the same part)	– The CD is dirty.	• Clean the CD with a soft, lint-free cloth.
– The CD skips tracks.	– The CD is damaged or dirty.	• Replace or clean the CD.
– Play does not start from the first track	– Program or SHUFFLE activated activated	• Switch off SHUFFLE or clear programme.
– No sound or bad sound	– Loose or wrong connections. – Strong magnetic fields near the CD player.	• Check connections. • Find another place for the unit or change connections.
– Remote control does not function	– Batteries are empty. – RC5-IN line not properly connected or missing *(for CDC263 only)*	• Replace the batteries. • Connect the RC5-IN line *(for CDC263 only)*
– Remote control commands are not properly received	– The distance between remote control and CD player or HiFi System is further than 8 metres.	• Use remote control receiver EM 2200/2201. • Reduce the distance between remote control and CD player.

ESD

GB WARNING

All ICs and many other semi-conductors are susceptible to electrostatic discharges (ESD).
Careless handling during repair can reduce life drastically.
When repairing, make sure that you are connected with the same potential as the mass of the set via a wrist wrap with resistance.
Keep components and tools also at this potential.

F ATTENTION

Tous les IC et beaucoup d'autres semi-conducteurs sont sensibles aux décharges statiques (ESD).
Leur longévité pourrait être considérablement écourtée par le fait qu'aucune précaution n'est prise à leur manipulation.
Lors de réparations, s'assurer de bien être relié au même potentiel que la masse de l'appareil et enfiler le bracelet serti d'une résistance de sécurité.
Veiller à ce que les composants ainsi que les outils que l'on utilise soient également à ce potentiel.

D WARNUNG

Alle ICs und viele andere Halbleiter sind empfindlich gegenüber elektrostatischen Entladungen (ESD).
Unsorgfältige Behandlung im Reparaturfall kan die Lebensdauer drastisch reduzieren.
Veranlassen Sie, dass Sie im Reparaturfall über ein Pulsarmband mit Widerstand verbunden sind mit dem gleichen Potential wie die Masse des Gerätes.
Bauteile und Hilfsmittel auch auf dieses gleiche Potential halten.

NL WAARSCHUWING

Alle IC's en vele andere halfgeleiders zijn gevoelig voor electrostatische ontladingen (ESD).
Onzorgvuldig behandelen tijdens reparatie kan de levensduur drastisch doen verminderen.
Zorg ervoor dat u tijdens reparatie via een polsband met weerstand verbonden bent met hetzelfde potentiaal als de massa van het apparaat.
Houd componenten en hulpmiddelen ook op ditzelfde potentiaal.

I AVVERTIMENTO

Tutti IC e parecchi semi-conduttori sono sensibili alle scariche statiche (ESD).
La loro longevità potrebbe essere fortemente ridatta in caso di non osservazione della più grande cauzione alla loro manipolazione.
Durante le riparazioni occorre quindi essere collegato allo stesso potenziale che quello della massa dell'apparecchio tramite un braccialetto a resistenza.
Assicurarsi che i componenti e anche gli utensili con quali si lavora siano anche a questo potenziale.

GB

Safety regulations require that the set be restored to its original condition and that parts which are identical with those specified, be used.

NL

Veiligheidsbepalingen vereisen, dat het apparaat bij reparatie in zijn oorspronkelijke toestand wordt teruggebracht en dat onderdelen, identiek aan de gespecificeerde, worden toegepast.

I

Le norme di sicurezza esigono che l'apparecchio venga rimesso nelle condizioni originali e che siano utilizzati i pezzi di ricambio identici a quelli specificati.

F

Les normes de sécurité exigent que l'appareil soit remis à l'état d'origine et que soient utilisées les piéces de rechange identiques à celles spécifiées.

D

Bei jeder Reparatur sind die geltenden Sicherheitsvorschriften zu beachten. Der Original zustand des Geräts darf nicht verändert werden; für Reparaturen sind Original-Ersatzteile zu verwenden.

"After servicing and before returning set to customer perform a leakage current measurement test from all exposed metal parts to earth ground to assure no shock hazard exist. The leakage current must not exceed 0.5mA."

"Pour votre sécurité, ces documents doivent être utilisés par des spécialistes agréés, seuls habilités à réparer votre appareil en panne".

CLASS 1
LASER PRODUCT
3122 110 03420

GB Warning !

Invisible laser radiation when open.
Avoid direct exposure to beam.

S Varning !

Osynlig laserstrålning när apparaten är öppnad och spärren är urkopplad. Betrakta ej strålen.

SF Varoitus !

Avatussa laitteessa ja suojalukituksen ohitettaessa olet alttiina näkymättömälle laserisäteilylle. Älä katso säteeseen!

DK Advarse !

Usynlig laserstråling ved åbning når sikkerhedsafbrydere er ude af funktion. Undgå udsaettelse for stråling.

DISMANTLING INSTRUCTIONS
DEMOUNTING OF COVER

5

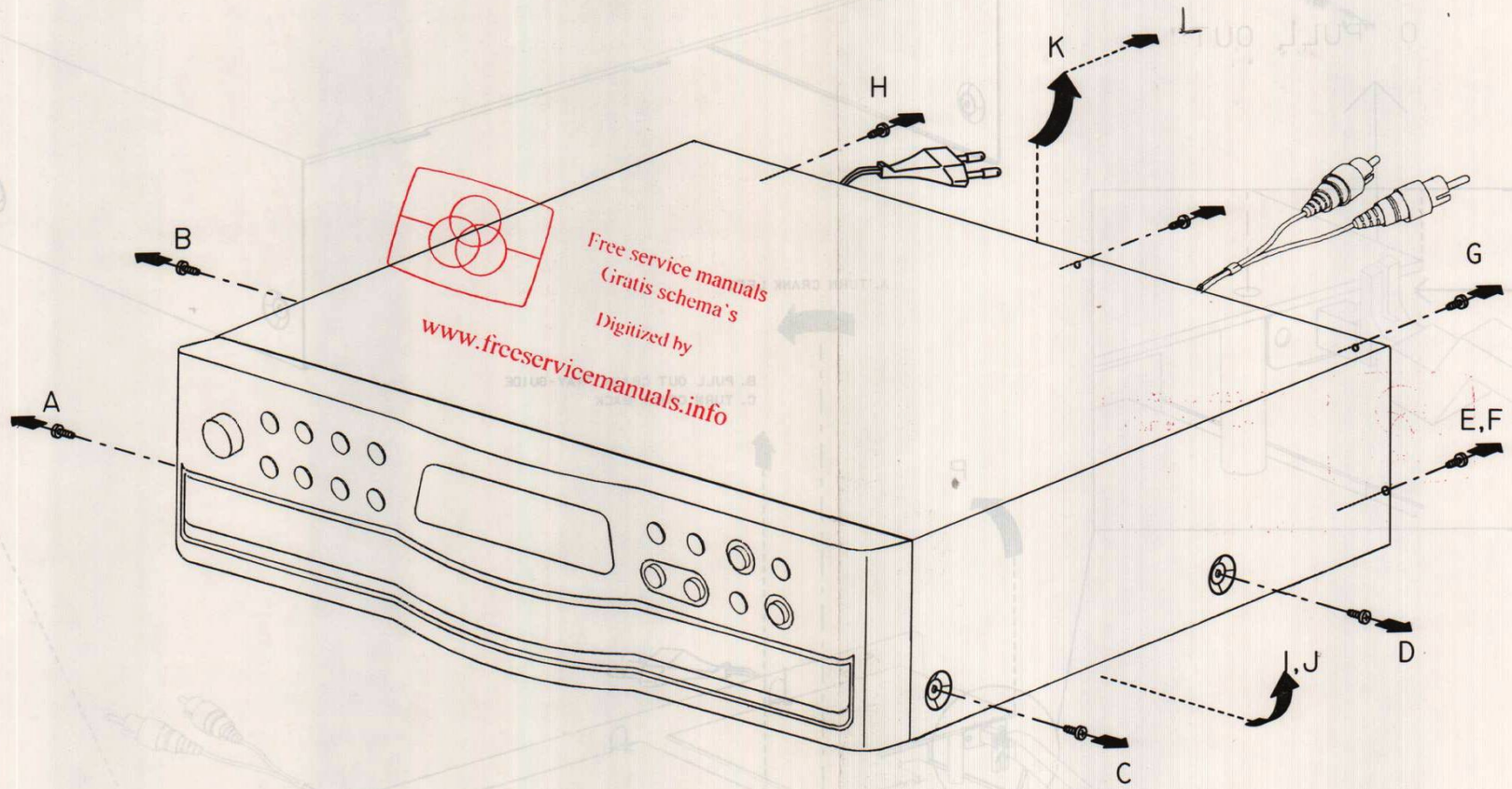

PULL OUT OF TRAY
DEMOUNTING OF TRAYFRONT

6

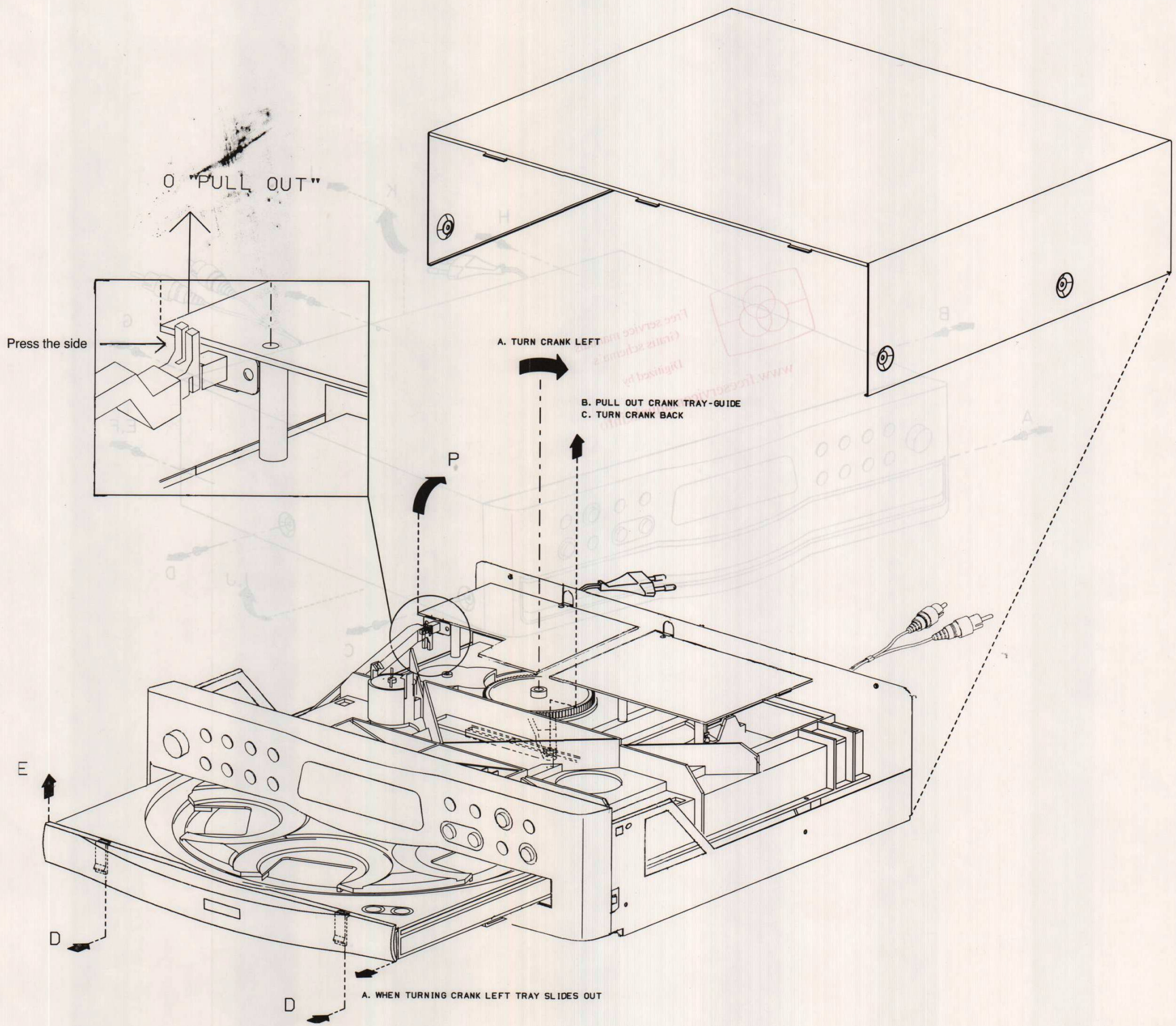

PULL-OUT OF FLEXFOIL DEMOUNTING OF FRONT

7

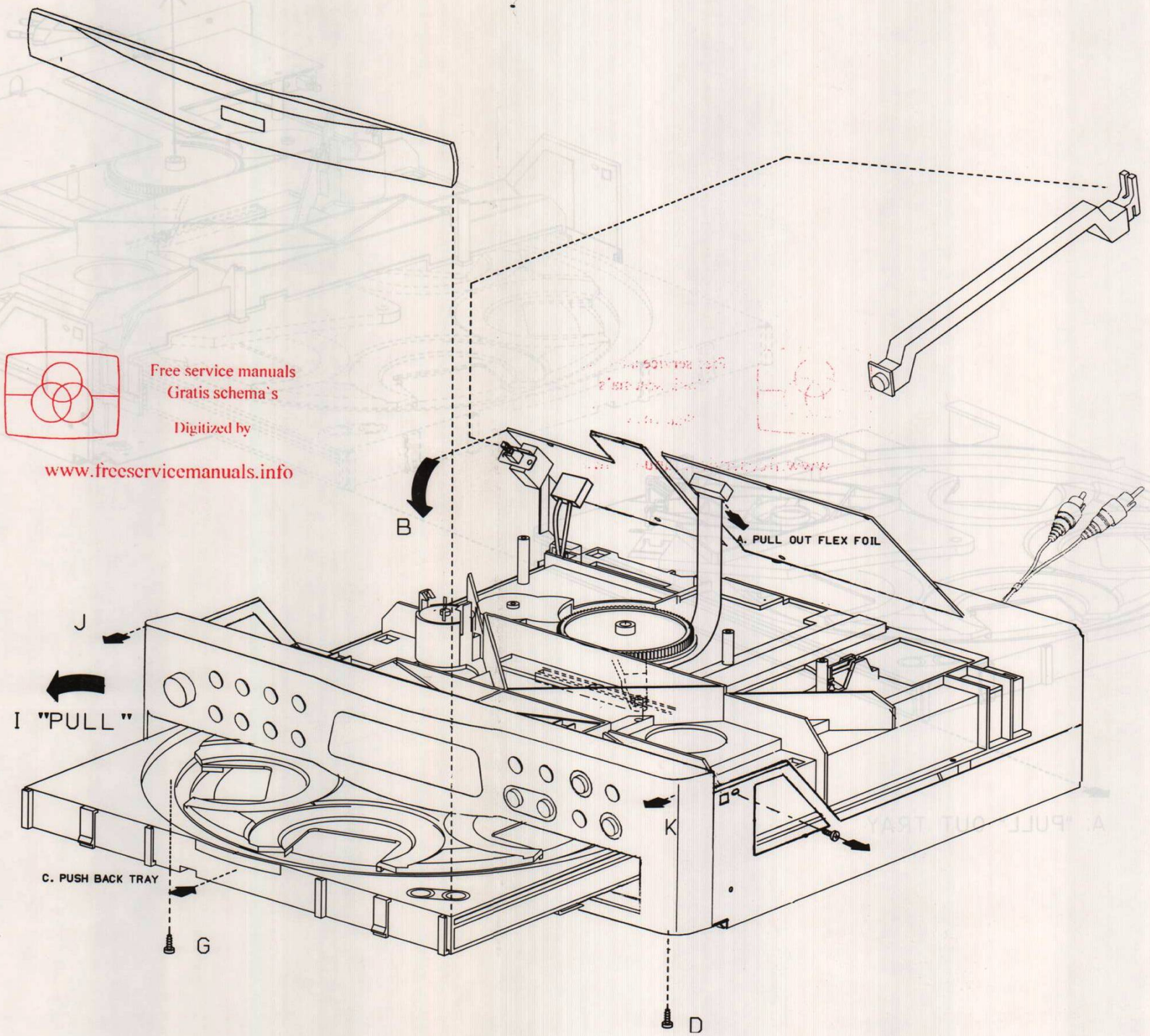

8

PULL OUT OF TRAY

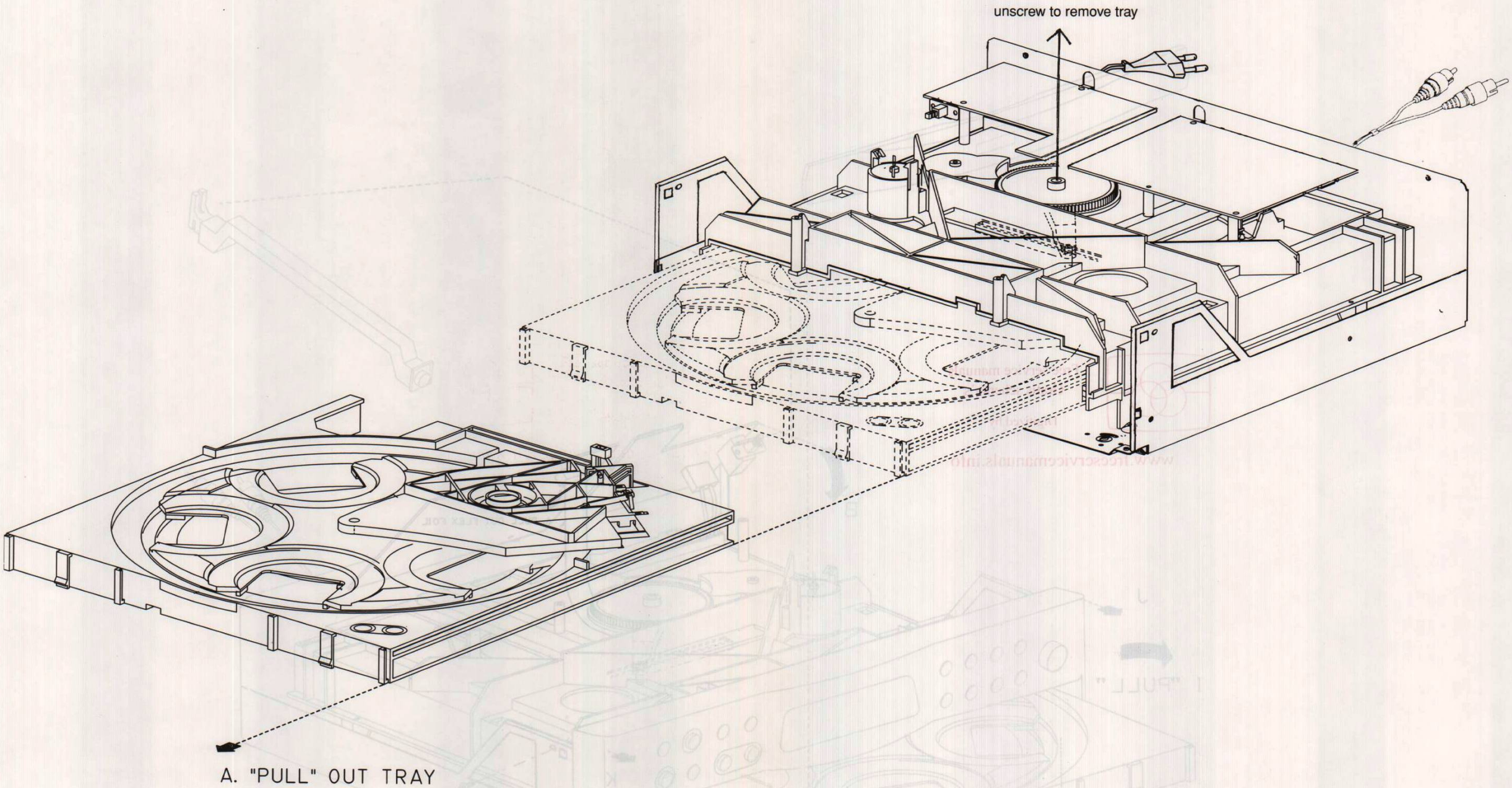

DEMOUNTING OF CARROUSEL
DEMOUNTING OF CDM

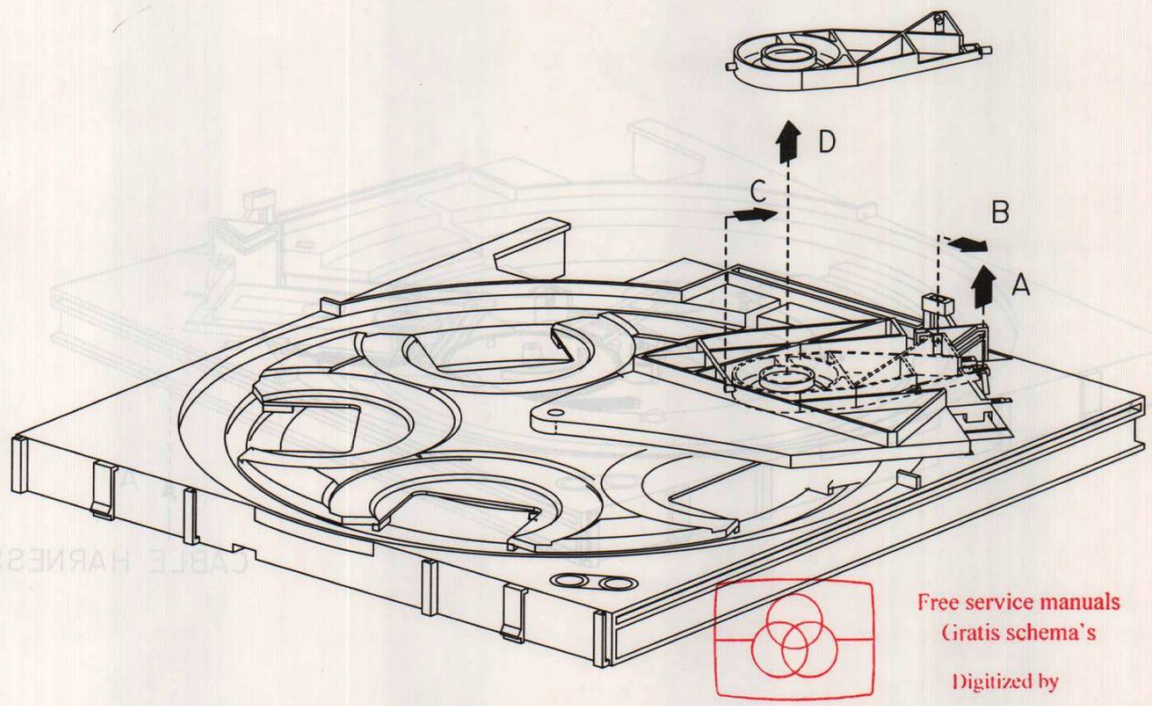

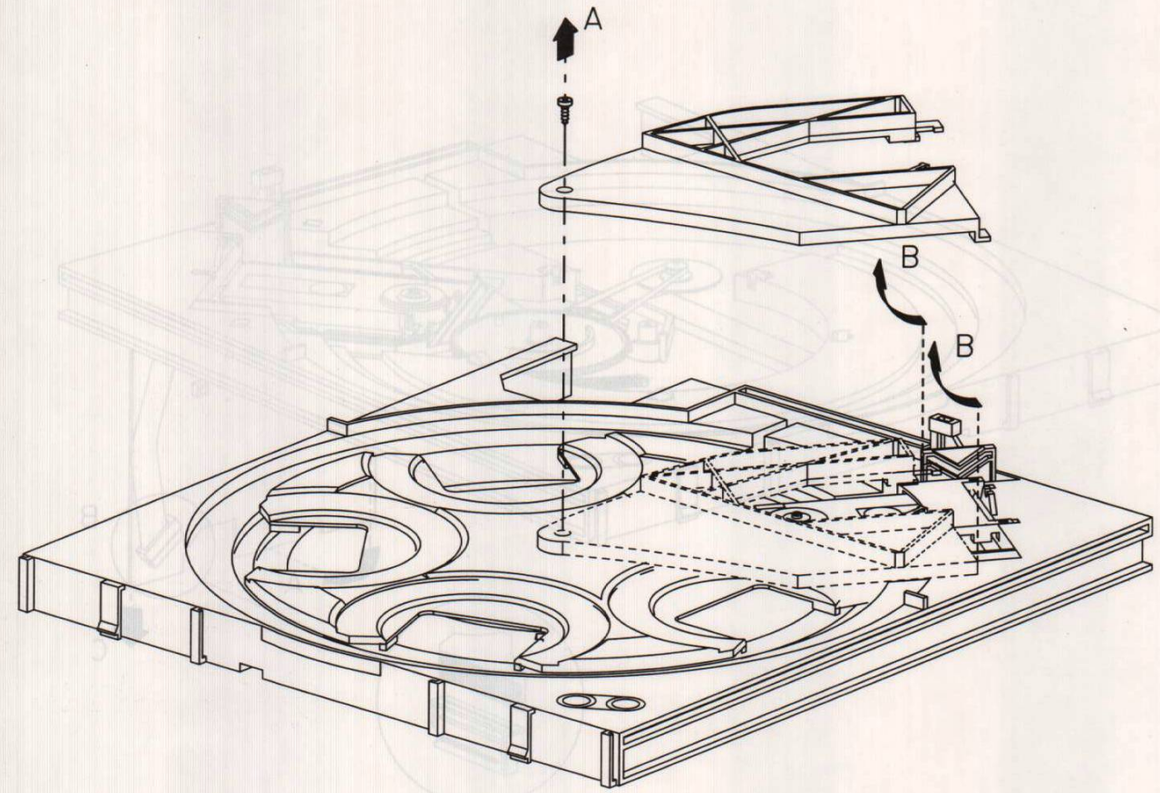

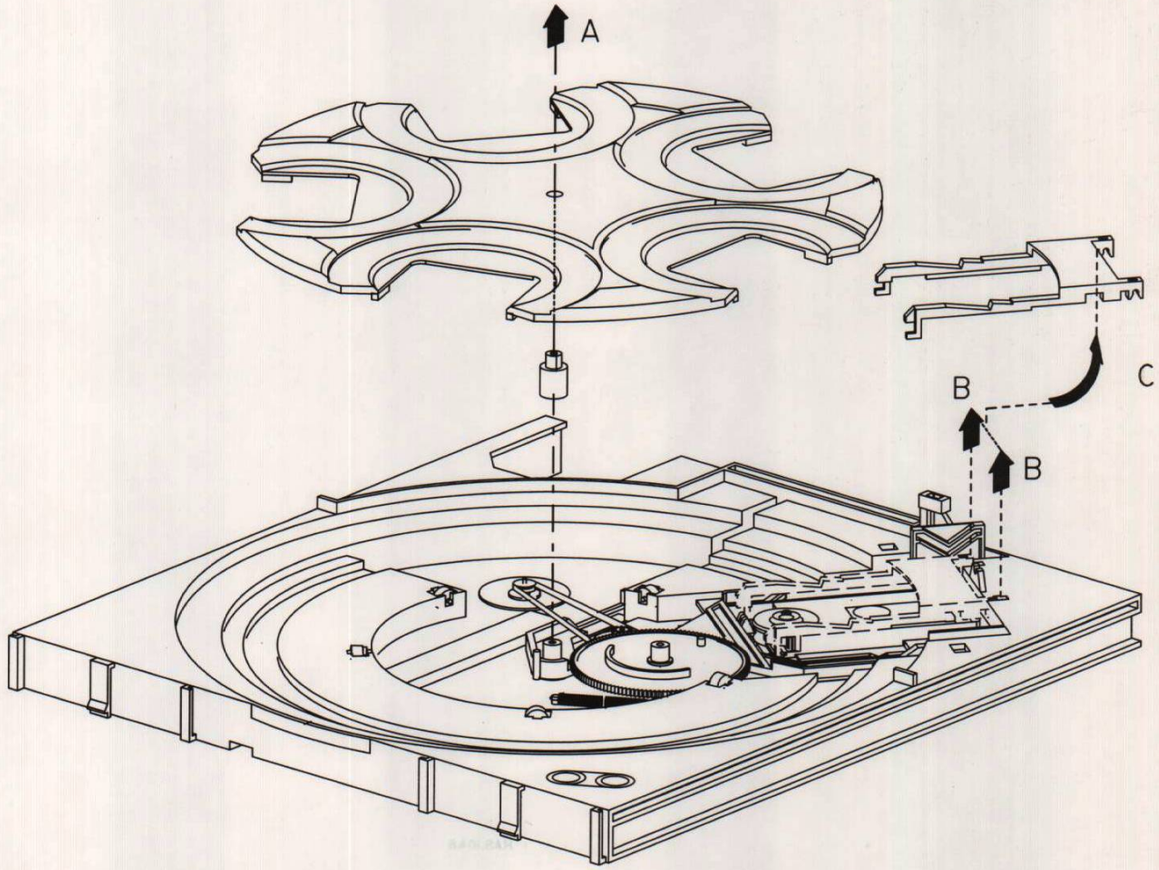

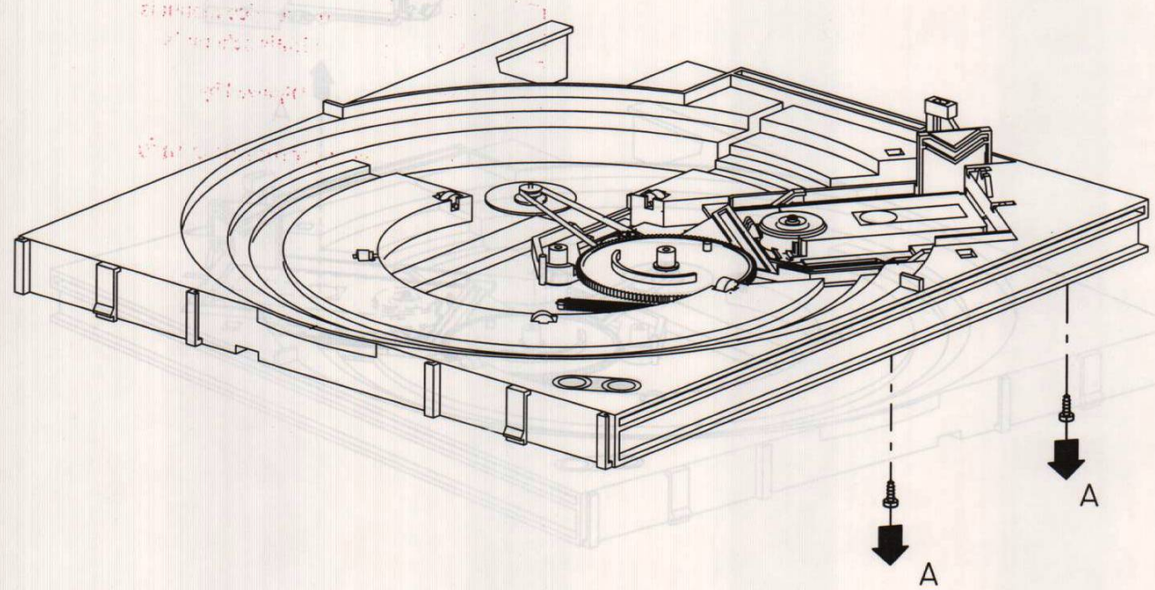

HAS.1047

10

DEMOUNTING OF CDM

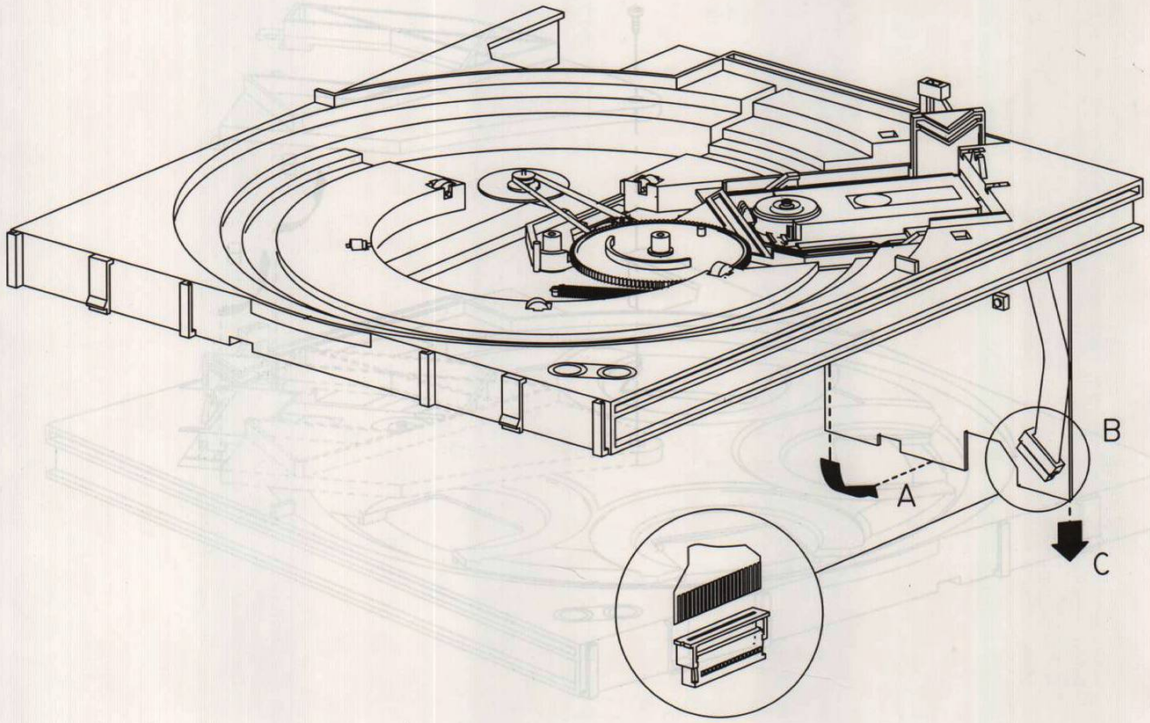

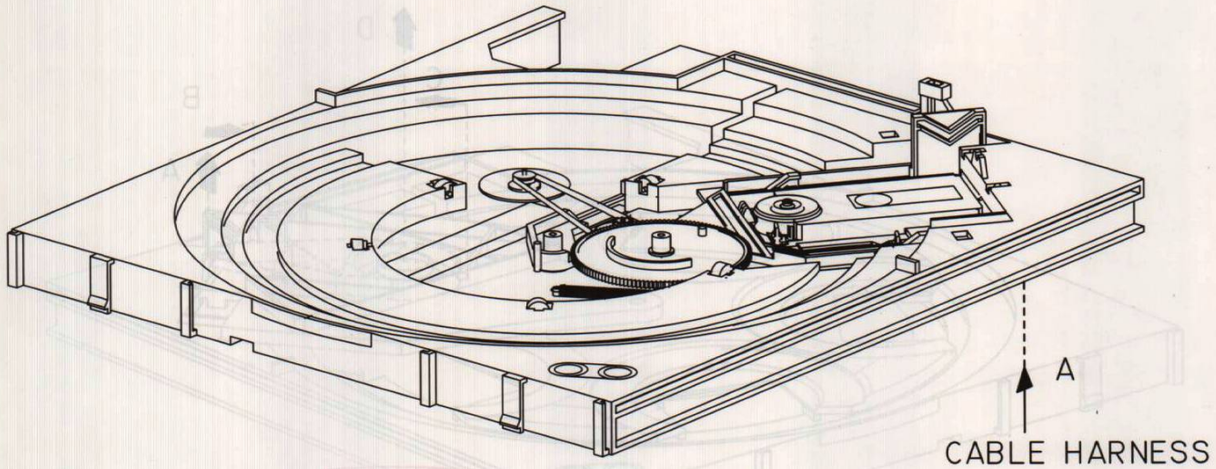

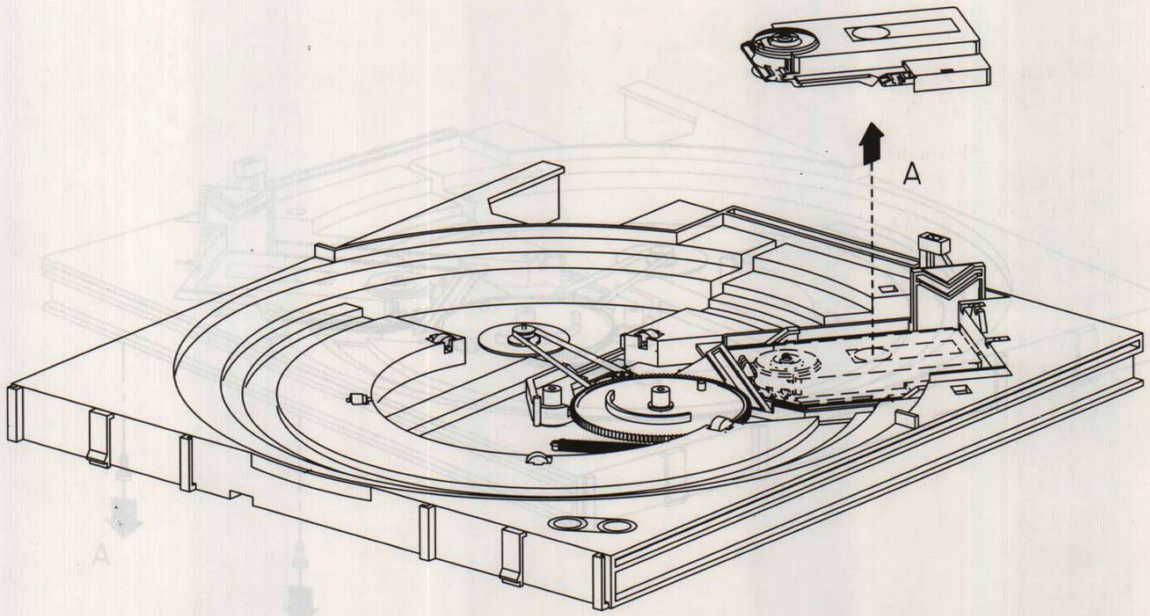

HAS.1048

SERVICING HINTS

In the set chip components have been applied. For disassembly and assembly of chip components see the figure below.

HANDLING CHIP COMPONENTS

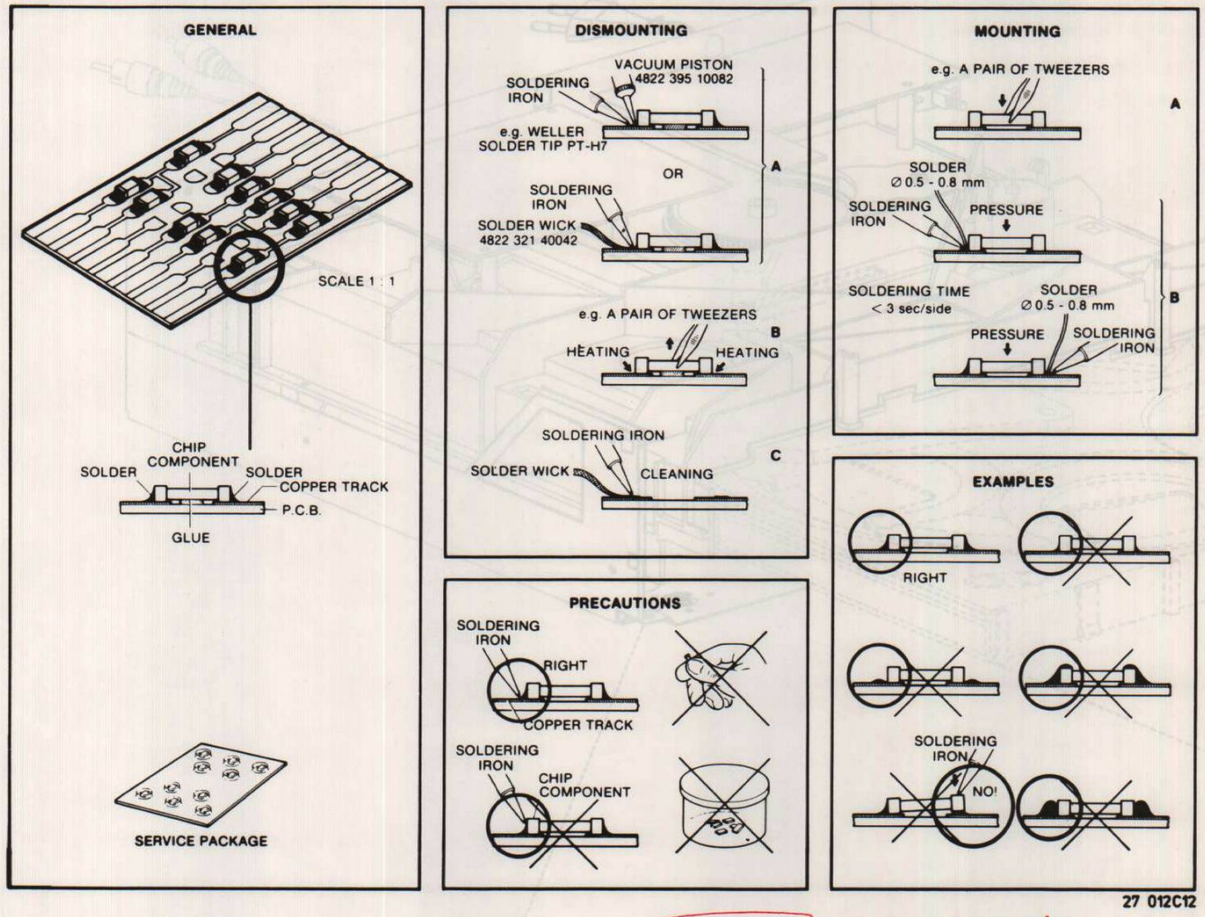

SERVICE TOOLS

Audio signal disc	4822 397 30184
Disc without errors (test disc 5) + disc with DO errors, black spots and fingerprints (test disc 5A	4822 397 30096
Disc (65 min 1kHz) without pause	4822 397 30155
Max. diameter disc (58.0 mm)	4822 397 60141
Torx screwdrivers	
Set (straight)	4822 395 50145
Set (square)	4822 395 50132
13th order filter	4822 395 30204

11

SERVICE HINT ABOUT PHOTOTRANSISTOR 7601

The disc detection does not work when the decoder panel is demounted and when external light fails on the phototransistor.
This can be prevented by covering the transistor with a place of paper or a cloth.

12

SERVICING HINTS

SERVICE POSITION OF TRAY

- Pull out tray and place it horizontally on the frame.
- Reconnect the flexfoil.
- Power on. Wait until discnumber "1" or "2" is on its preferred position.
- Press stop.
- Power off.
- Load disc (on the preferred position).
- Go to service mode 0.
- Press play: wait until the disc is in the playposition.
- Now it is possible to place the tray vertically on the frame while playing.
- In this position measurements can be done on the Servo Panel.

Please: do not touch the disc selection buttons, the shuffle button and the load button.

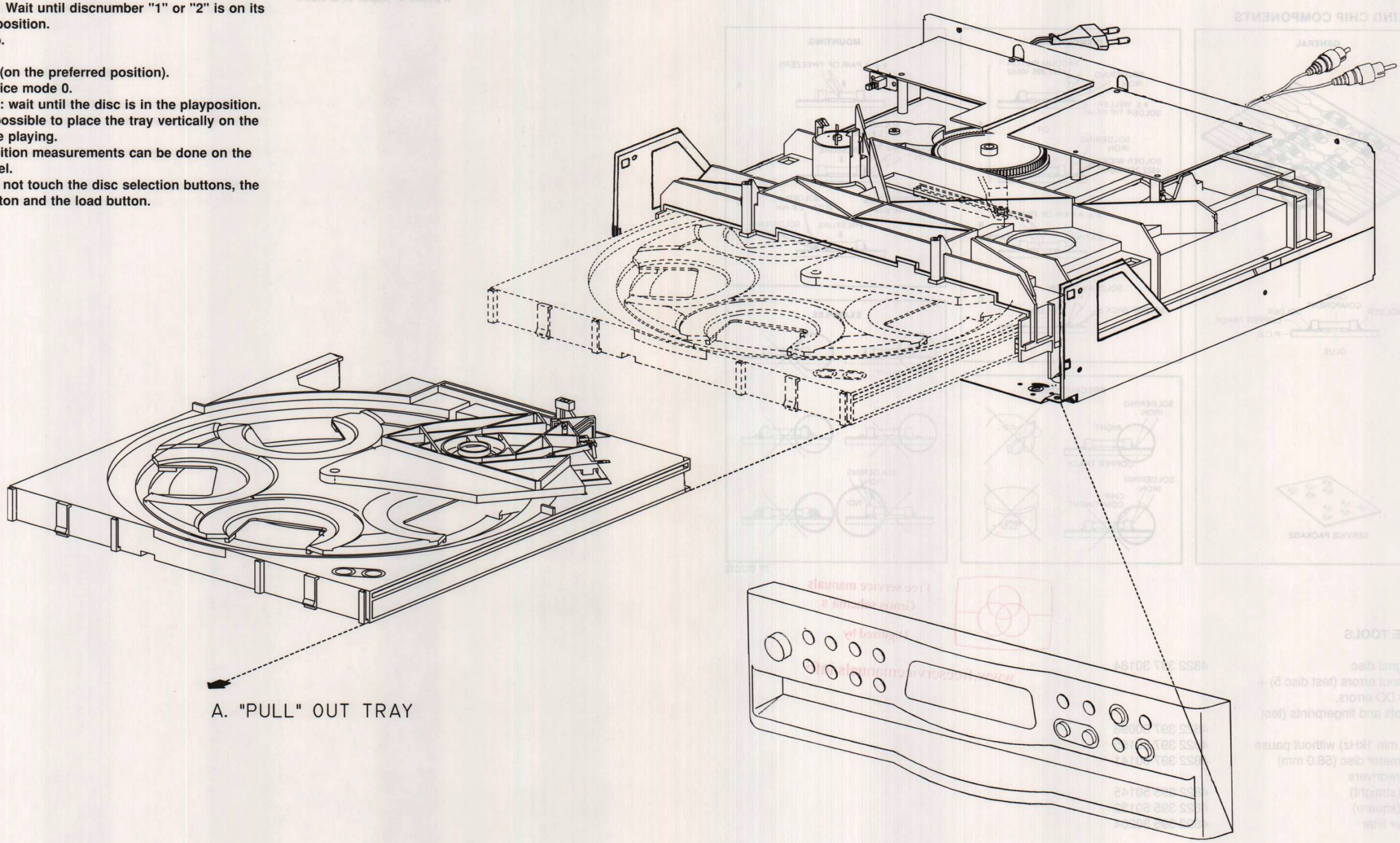

13

13

ASSEMBLY OF THE CARROUSEL

Turn camwheel (Exploded View item 116) until the conduction pin is in line with the rotary table of the CDM and the axis of the carrousel, or until the conduction pin is close to the CDM. The CDM is now in the highest position (Play position).
Mount the carrousel with the discnumber "1" to the CDM.

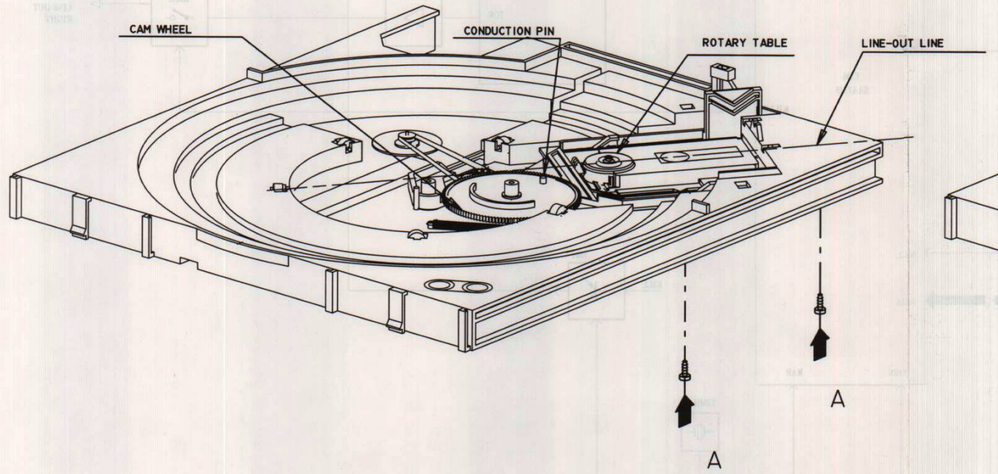

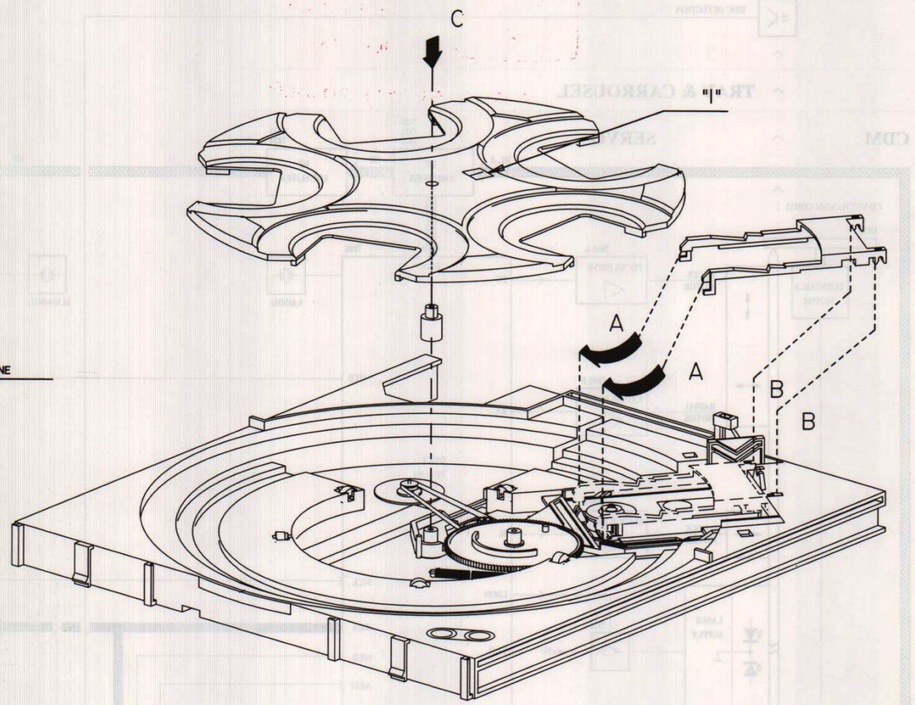

ABBREVIATIONS

ACK	Acknowledge signal display(active LOW)
BCK	Bit clock input of BCC-DAC TDA1549
CARMOT	Carrousel motor
CARSW	Carrousel switch
CFLG	correction flag output
CL	interface clock input line
CL11	11.2896 MHz clock output
CL16	16.9344 MHz system clock output
CLA	4.2336 MHz microprocessor clock out put
CLO	Clock output
CRIN	crystal/resonator input
CROUT	crystal/resonator output
D1-D4	Central diode input of TDA1301
D1-D5	Photodiode signals from CDM12 mechanism
DA	interface data I/O line
DACCL	Bit clock output of CD6 decoder SAA7345
DACDA	Data output of CD6 decoder SAA7345
DACWS	Word select output of CD6 decoder SAA7345
DATA	serial data output/Data input of BCC-DAC TDA1549
DISPOS	Disc position
DISRES	RESET display
DOBM	Digital AUDIO output
ESI	Enhanced System Intelligence
FO	Focus actuator output
FOC+	+Connection of focus actuator
FOC-	Ground connection of focus actuator
HF	High-Frequency signal to decoder input
HFIN	comparator signal input
HFREF	comparator common-mode input
I.R.	Infra red receiver remote control
IREF	Reference current output
ISLICE	current feedback from data slicer
LDON	Laser drive on
LOAD SW	Load switch
MISC	general purpose DAC output
MOTO1,2	motor output 1,2
NRST	Reset input
OTD	Off track detector
PORE	power-on reset enable input(active low)
R1-R2	Satellite diode signal input
RA	Radial actuator output
RAB	interface R/W and acknowledge input
RAD+	+Connection of radial actuator
RAD-	Ground connection of radial actuator
SCK	CLOCK display
SCLK	serial bit clock output
SDAT	Serial data
SDAT0	DATAIN display
SDAT1	DATAOUT display
SDIS	Select display
SICL	Serial interface clock
SIDA	Serial interface data
SILD	Serial interface load
SL	Sledge output
SL OUT	+Connection of sledge motor
SLEDGE SW	Sledge switch of CDM12 mechanism
V1-5	Versatile input pins
VOL	Left channel output
VOR	Right channel output
WCLK	Word clock output
WS	Word select input of BCC-DAC TDA1549
XTLI	Oscillator input
XTLO	Oscillator output
XTLR	Oscillator reference

BLOCK DIAGRAM

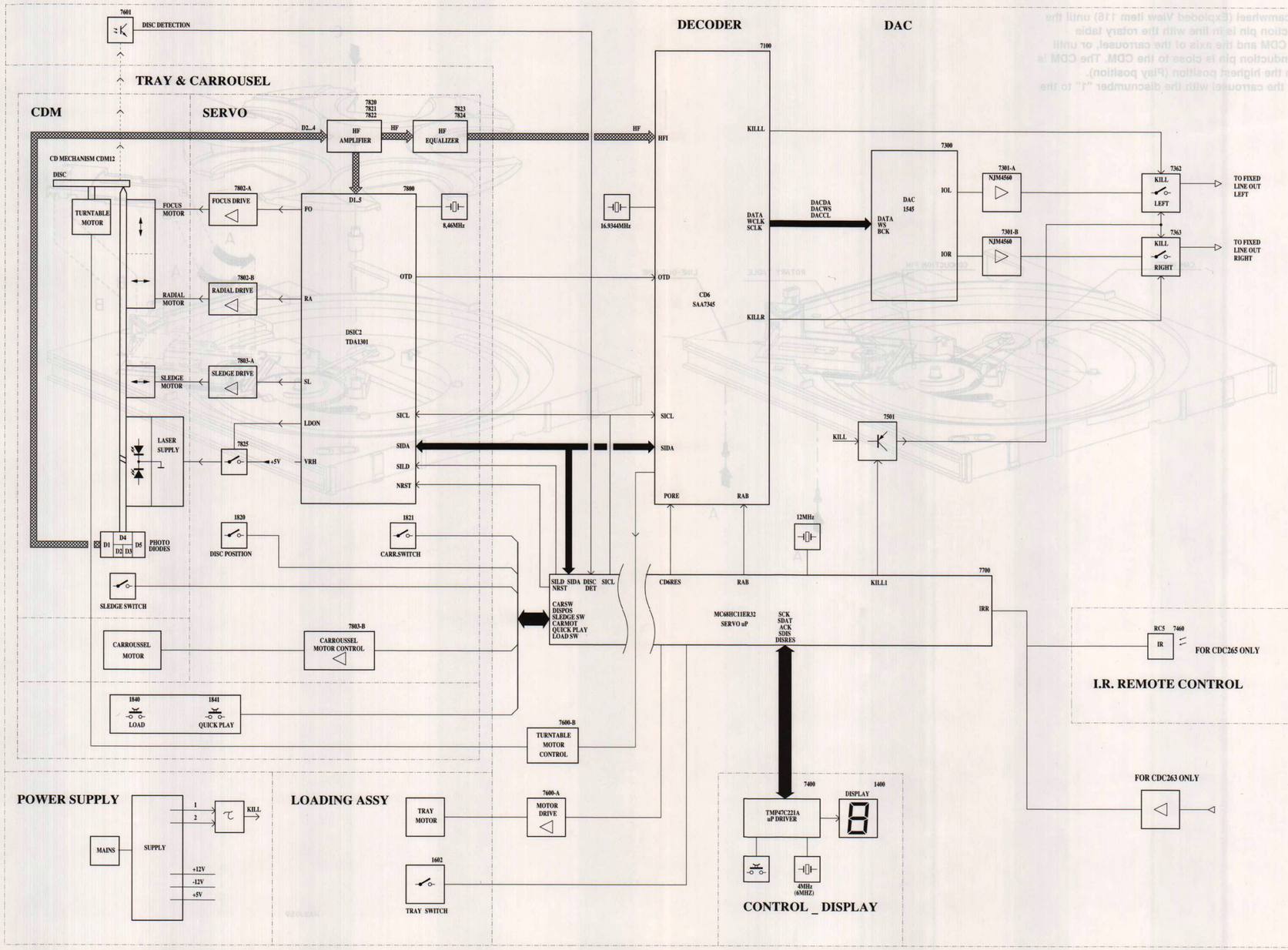

15

WIRING DIAGRAM

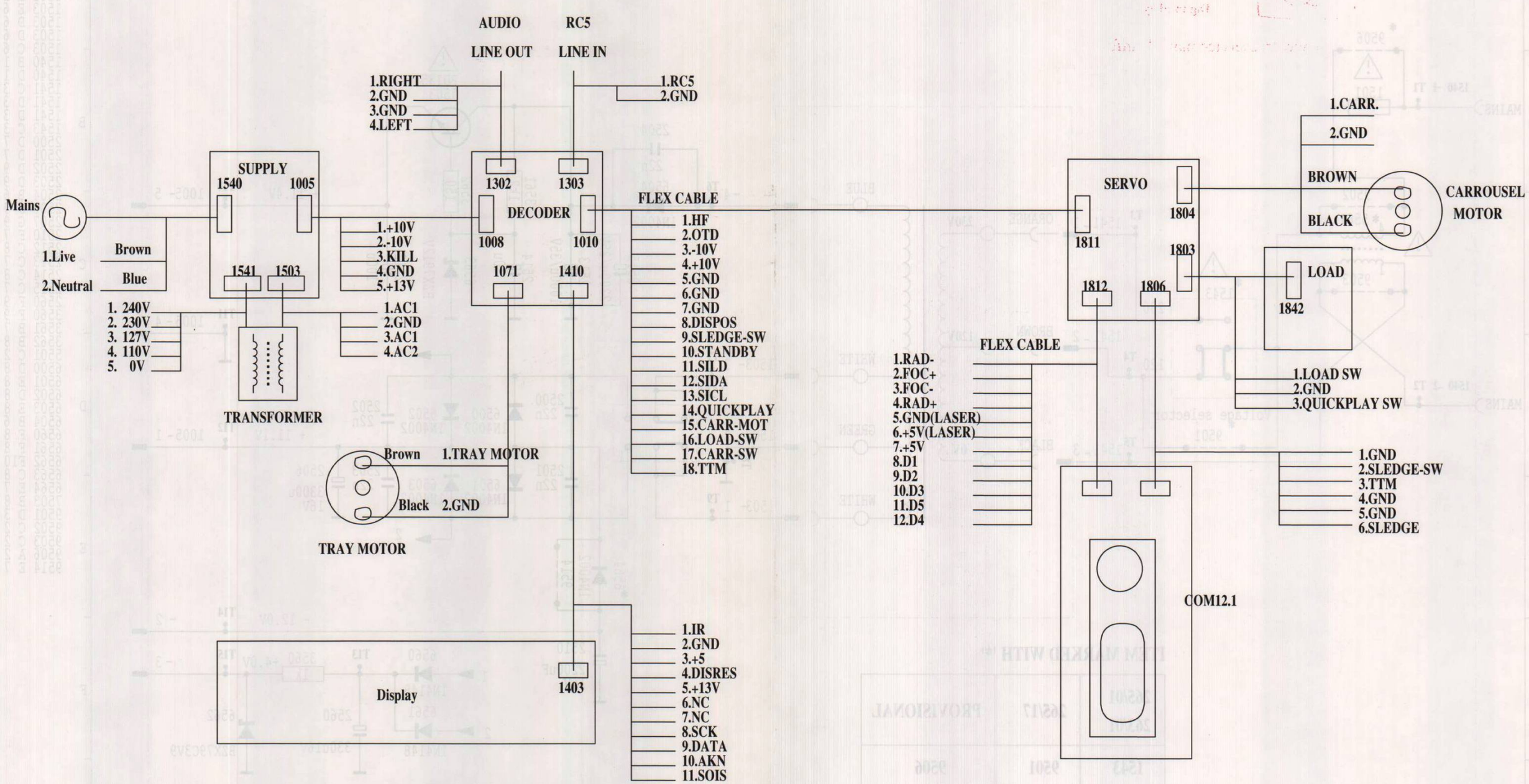

16

POWER SUPPLY CIRCUIT DIAGRAM

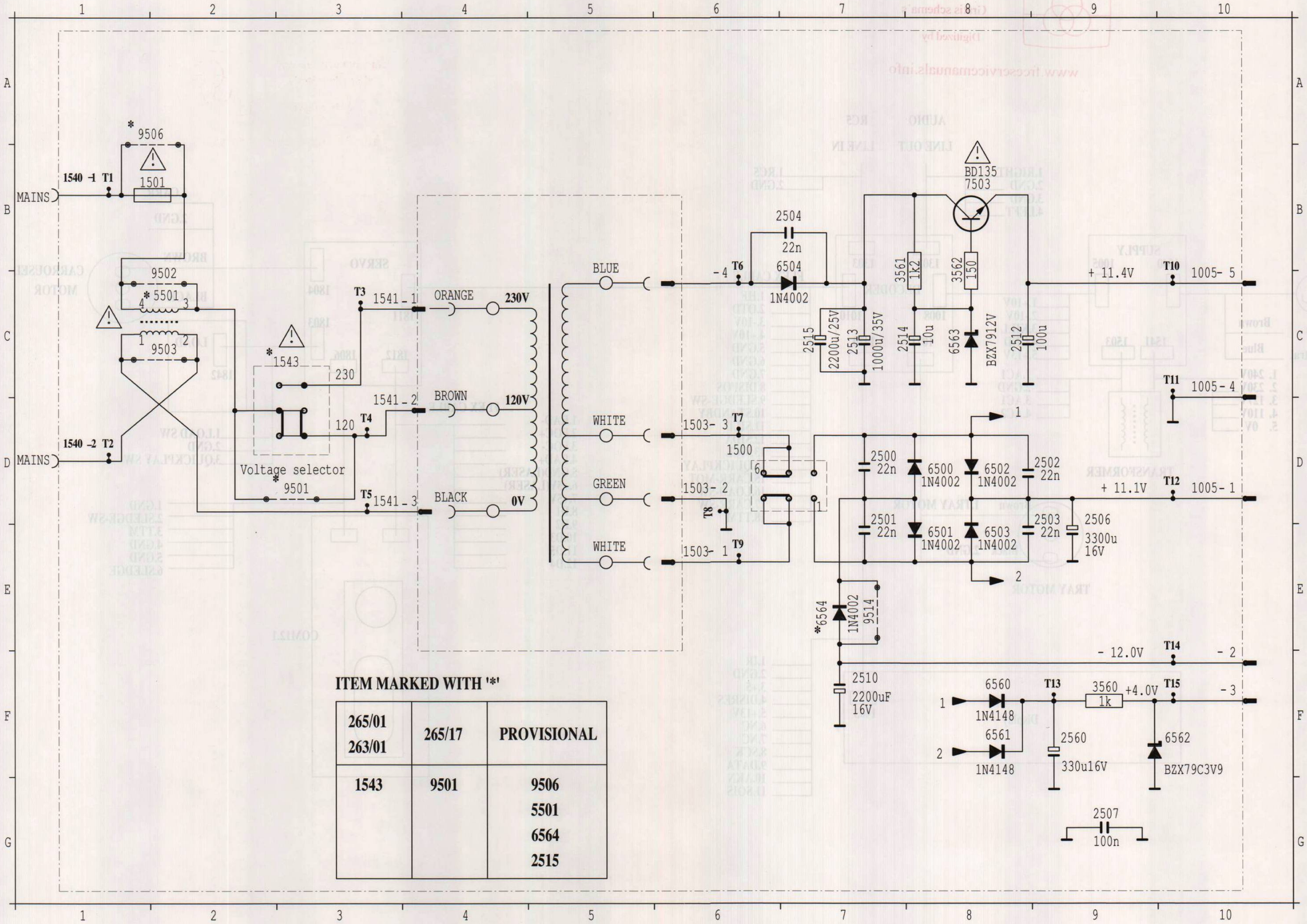

1005 D10
1005 F10
1005 F10
1005 C10
1005 C10
1500 D 6
1501 B 2
1503 E 6
1503 D 6
1503 D 6
1503 C 6
1540 B 1
1540 D 1
1541 C 3
1541 D 3
1541 D 3
1543 C 3
2500 D 7
2501 D 7
2502 D 9
2503 D 9
2504 B 6
2506 D 9
2507 G 9
2510 F 7
2512 C 8
2513 C 7
2514 C 8
2515 C 7
2560 F 9
3560 F 9
3561 B 7
3562 B 8
5501 C 2
6500 D 8
6501 E 8
6502 D 8
6503 E 8
6504 B 6
6560 F 8
6561 F 8
6562 F10
6563 C 8
6564 E 7
7503 B 8
9501 D 3
9502 C 2
9503 C 2
9506 A 2
9514 E 7

ITEM MARKED WITH '*'

265/01 263/01	265/17	PROVISIONAL
1543	9501	9506 5501 6564 2515

17

POWER SUPPLY COMPONENT LAYOUT

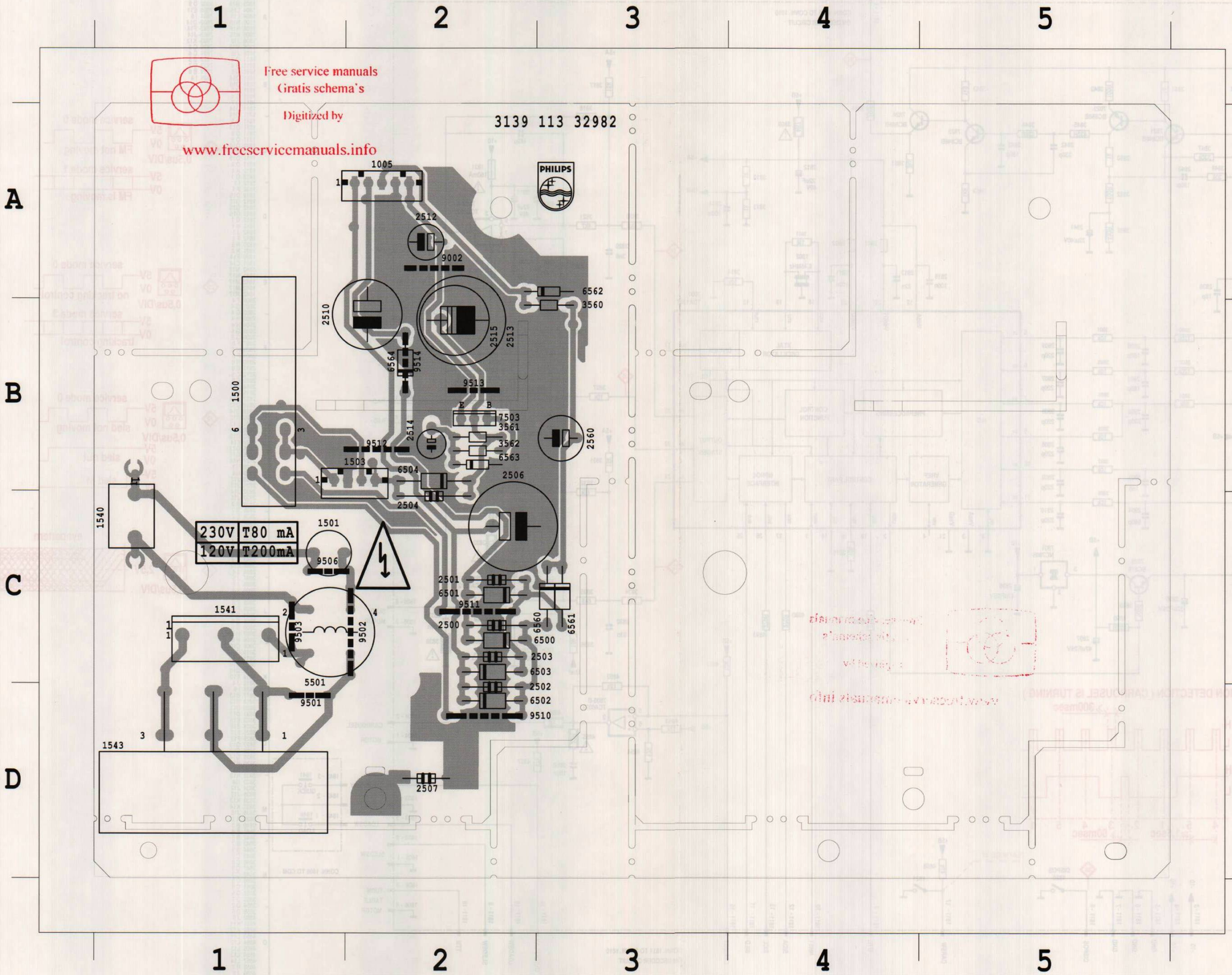

1005 A 2
1500 B 1
1501 C 1
1503 B 2
1540 C 1
1541 C 1
1543 D 1
2500 C 2
2501 C 2
2502 D 2
2503 C 2
2504 C 2
2506 C 2
2507 D 2
2510 B 2
2512 A 2
2513 B 2
2514 B 2
2515 B 2
2560 B 3
3560 B 3
3561 B 2
3562 B 2
5501 C 1
6500 C 2
6501 C 2
6502 D 2
6503 C 2
6504 B 2
6560 C 3
6561 C 3
6562 A 3
6563 B 2
6564 B 2
7503 B 2
9002 A 2
9501 D 1
9502 C 2
9503 C 1
9506 C 1
9510 D 2
9511 C 2
9512 B 2
9513 B 2
9514 B 2

SERVO CIRCUIT DIAGRAM

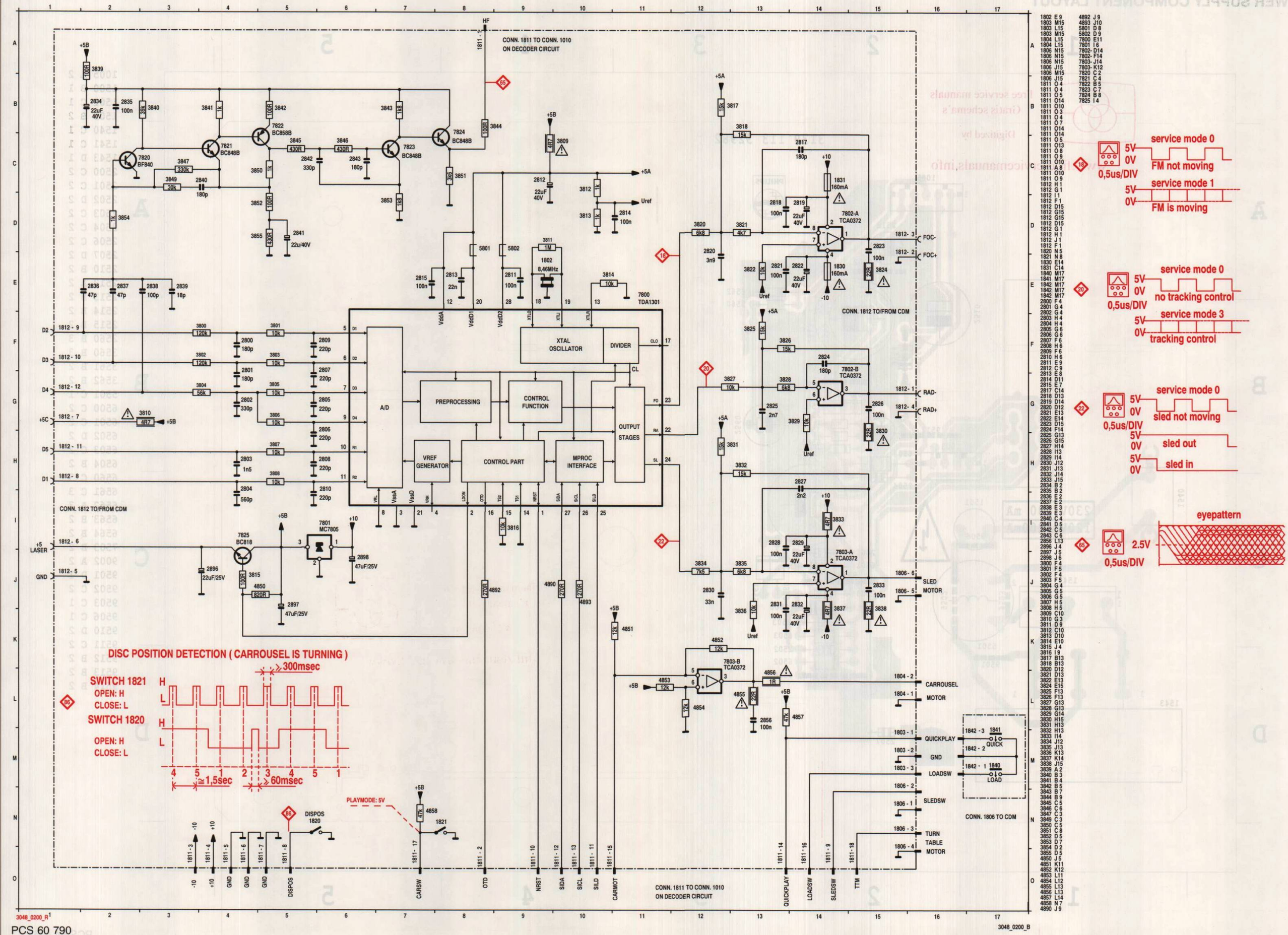

SERVO PANEL
COMPONENT SIDE

1802 A 3	1845 A 5	2809 B 2	2819 A 4	2829 B 3	2839 A 1	3801 B 2	3811 A 3	3822 A 4	3833 B 4	3843 B 2	3854 B 1	4858 C 3	4899 A 4	7823 C 2	9807 C 3	9819 C 3	9830 B 4	1840 C 6
1803 B 5	2800 B 2	2810 A 2	2820 A 3	2830 B 3	2840 B 2	3802 A 2	3812 B 2	3824 A 3	3834 B 3	3844 B 3	3855 C 1	4890 B 4	5801 B 3	7824 B 2	9808 A 3	9820 C 4	9831 B 4	1841 C 6
1804 A 5	2801 B 2	2811 B 2	2821 A 4	2831 B 4	2841 B 1	3803 B 2	3813 B 2	3825 A 3	3835 C 3	3845 C 1	4850 C 3	4891 B 4	5802 B 2	7825 C 3	9810 A 3	9821 C 4	9832 B 5	1842 B 6
1806 A 5	2802 B 2	2812 B 2	2822 A 4	2832 B 4	2842 C 2	3804 A 2	3814 A 2	3826 A 4	3836 C 4	3846 C 1	4851 B 3	4892 A 3	7800 A 2	9800 C 1	9811 A 3	9822 C 4	9833 A 5	
1811 B 4	2803 A 2	2813 A 3	2823 A 4	2833 A 4	2843 C 2	3805 B 2	3815 C 3	3827 B 3	3837 B 4	3847 B 1	4852 C 3	4893 C 4	7801 B 3	9801 B 1	9812 A 3	9823 C 4	9834 B 5	
1812 A 1	2804 A 2	2814 B 2	2824 A 4	2834 C 2	2856 A 4	3806 A 2	3816 A 3	3828 A 4	3838 A 5	3849 B 2	4853 B 3	4894 B 2	7802 A 4	9802 A 1	9814 A 3	9824 C 4	9835 B 4	
1820 C 5	2805 B 2	2815 A 2	2825 A 3	2835 C 2	2896 C 3	3807 A 2	3817 A 3	3829 A 4	3839 C 3	3850 C 2	4854 B 3	4895 A 1	7803 B 3	9803 A 2	9815 A 4	9825 C 4	9836 B 5	
1821 C 2	2806 A 2	2816 A 2	2826 A 3	2836 A 2	2897 B 3	3808 A 2	3818 A 4	3830 A 3	3840 B 2	3851 C 2	4855 A 4	4896 B 2	7820 B 1	9804 A 2	9816 B 3	9827 C 4	9837 A 3	
1830 A 4	2807 B 2	2817 A 4	2827 C 3	2837 A 2	2898 B 3	3809 B 2	3820 B 3	3831 B 3	3841 B 2	3852 C 2	4856 A 4	4897 C 3	7821 B 2	9805 B 2	9817 B 4	9828 B 4	9838 B 2	
1831 A 4	2808 A 2	2818 A 4	2828 B 3	2838 A 2	3800 A 1	3810 A 3	3821 A 4	3832 C 3	3842 B 2	3853 C 2	4857 B 4	4898 A 4	7822 C 2	9806 C 3	9818 C 3	9829 B 4	----	

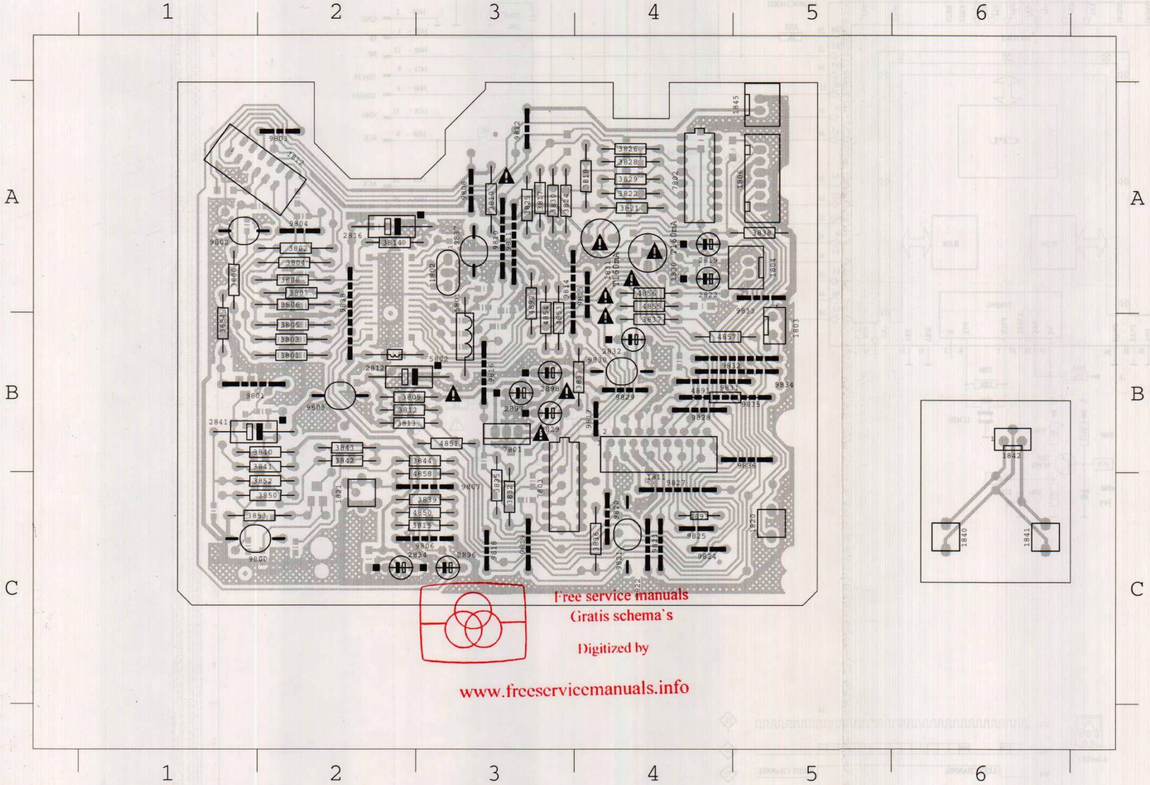

SOLDER SIDE

1840 C 6	9830 B 4	9819 C 3	9807 C 3	7823 C 2	4899 A 4	4858 C 3	3854 B 1	3843 B 2	3833 B 4	3822 A 4	3811 A 3	3801 B 2	2839 A 1	2829 B 3	2819 A 4	2809 B 2	1845 A 5	1802 A 3
1841 C 6	9831 B 4	9820 C 4	9808 A 3	7824 B 2	5801 B 3	4890 B 4	3855 C 1	3844 B 3	3834 B 3	3824 A 3	3812 B 2	3802 A 2	2840 B 2	2830 B 3	2820 A 3	2810 A 2	2800 B 2	1803 B 5
1842 B 6	9832 B 5	9821 C 4	9810 A 3	7825 C 3	5802 B 2	4891 B 4	4850 C 3	3845 C 1	3835 C 3	3825 A 3	3813 B 2	3803 B 2	2841 B 1	2831 B 4	2821 A 4	2811 B 2	2801 B 2	1804 A 5
	9833 A 5	9822 C 4	9811 A 3	9800 C 1	7800 A 2	4892 A 3	4851 B 3	3846 C 1	3836 C 4	3826 A 4	3814 A 2	3804 A 2	2842 C 2	2832 B 4	2822 A 4	2812 B 2	2802 B 2	1806 A 5
	9834 B 5	9823 C 4	9812 A 3	9801 B 1	7801 B 3	4893 C 4	4852 C 3	3847 B 1	3837 B 4	3827 B 3	3815 C 3	3805 B 2	2843 C 2	2833 A 4	2823 A 4	2813 A 3	2803 A 2	1811 B 4
	9835 B 4	9824 C 4	9814 A 3	9802 A 1	7802 A 4	4894 B 2	4853 B 3	3849 B 2	3838 A 5	3828 A 4	3816 A 3	3806 A 2	2856 A 4	2834 C 2	2824 A 4	2814 B 2	2804 A 2	1812 A 1
	9836 B 5	9825 C 4	9815 A 4	9803 A 2	7803 B 3	4895 A 1	4854 B 3	3850 C 2	3839 C 3	3829 A 4	3817 A 3	3807 A 2	2896 C 3	2835 C 2	2825 A 3	2815 A 2	2805 A 2	1820 C 5
	9837 A 3	9827 C 4	9816 B 3	9804 A 2	7820 B 1	4896 B 2	4855 A 4	3851 C 2	3840 B 2	3830 A 3	3818 A 4	3808 A 2	2897 B 3	2836 A 2	2826 A 3	2816 A 2	2806 A 2	1821 C 2
	9838 B 2	9828 B 4	9817 B 4	9805 B 2	7821 B 2	4897 C 3	4856 A 4	3852 C 2	3841 B 2	3831 B 3	3820 B 3	3809 B 2	2898 B 3	2837 A 2	2827 C 3	2817 A 4	2807 B 2	1830 A 4
	----	9829 B 4	9818 C 3	9806 C 3	7822 C 2	4898 A 4	4857 B 4	3853 C 2	3842 B 2	3832 C 3	3821 A 4	3810 A 3	3800 A 1	2838 A 2	2828 B 3	2818 A 4	2808 A 2	1831 A 4

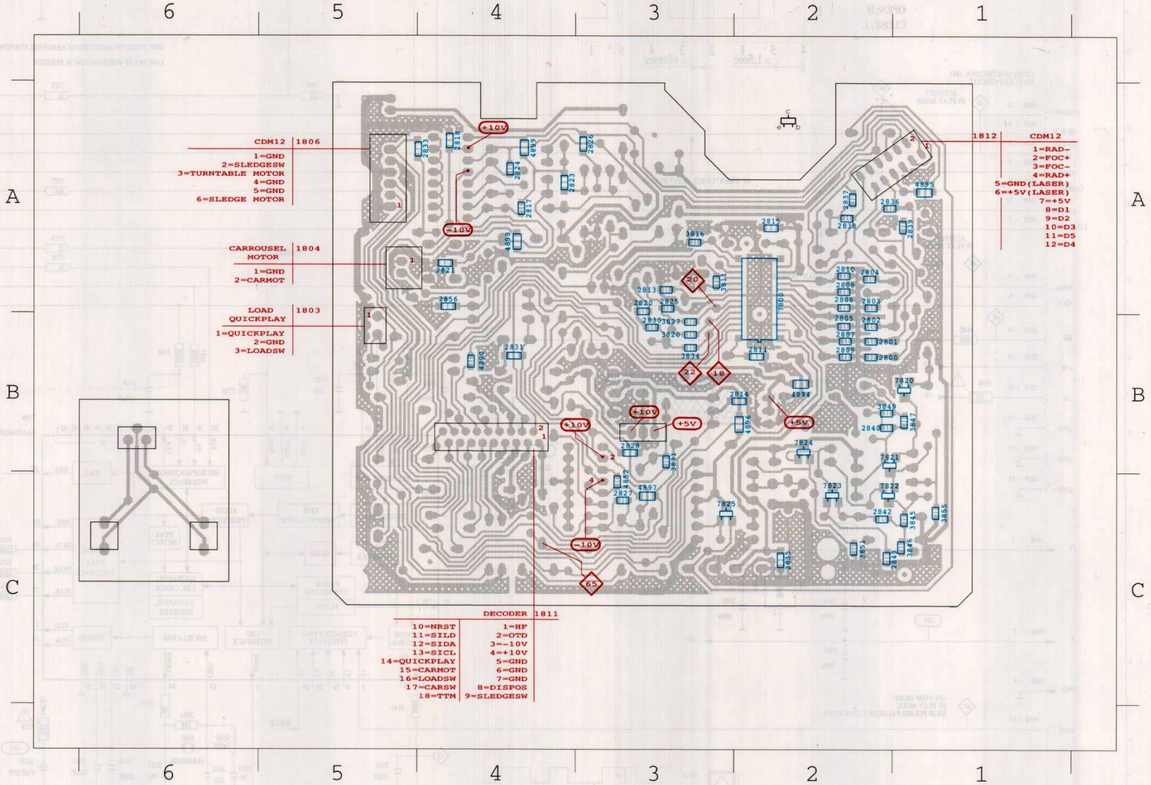

DECODER CIRCUIT DIAGRAM

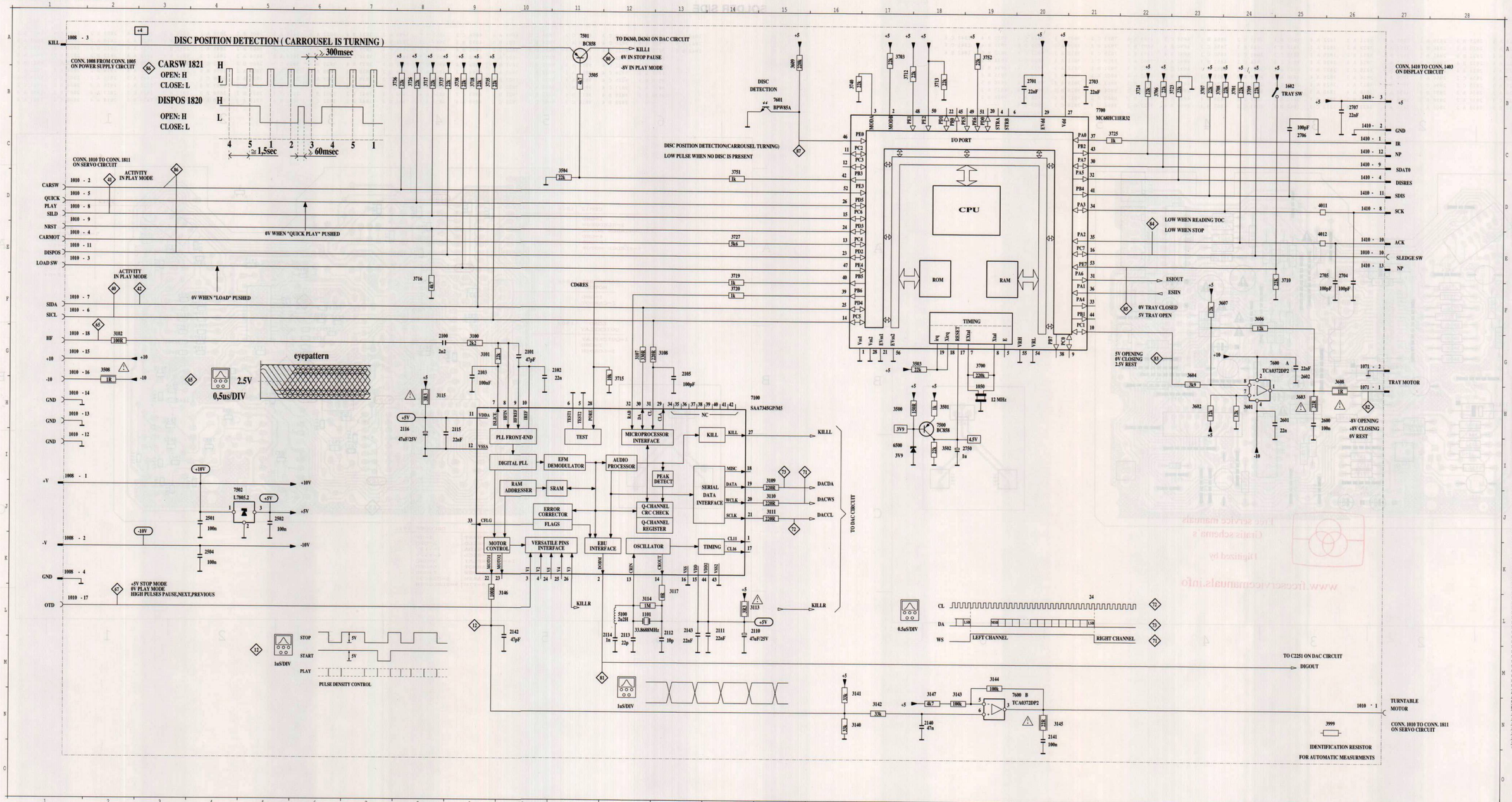

21

DECODER & DAC PANEL COMPONENT SIDE

9056 F 3	3999 B 4	3143 E 3	1008 F 1
9057 A 1	4000 B 3	3144 E 3	1010 D 4
9058 B 2	4001 A 3	3145 E 4	1020 B 1
9060 C 1	4002 A 1	3146 B 1	1050 E 2
9061 E 2	4003 B 3	3147 E 3	1071 F 3
9130 E 1	4004 C 3	3252 A 1	1073 A 1
9131 E 1	4005 A 3	3300 C 3	1101 A 1
9134 D 2	4006 B 1	3301 B 2	1250 A 1
9135 C 1	4009 C 1	3302 B 3	1300 A 2
9136 D 3	4010 E 2	3303 B 3	1301 B 2
9137 D 3	4011 E 2	3304 B 2	1302 A 4
	4012 F 2	3305 B 3	1410 F 3
	4013 F 2	3306 A 2	1602 D 1
	4014 D 1	3307 A 2	1750 A 3
	4300 A 2	3308 A 2	1751 A 3
	4301 A 2	3309 A 2	1800 D 1
	4501 F 1	3310 B 2	1815 B 4
	4740 A 4	3330 C 2	2100 A 1
	5100 A 1	3331 B 2	2101 A 1
	5250 A 1	3332 A 2	2102 A 1
	5300 B 2	3333 B 3	2103 B 1
	5301 B 3	3334 B 3	2105 B 1
	5501 E 1	3360 B 2	2110 B 1
	5502 E 1	3361 B 1	2111 B 1
	6360 B 3	3362 B 3	2112 B 1
	6361 B 2	3363 A 2	2113 A 1
	6500 D 2	3364 A 2	2114 A 1
	6740 A 4	3365 A 2	2115 A 1
	7100 B 1	3366 A 2	2116 A 1
	7300 C 2	3367 B 2	2118 B 1
	7301 B 3	3368 B 3	2140 E 3
	7302 C 2	3369 A 1	2141 E 4
	7360 B 3	3376 A 2	2142 B 1
	7361 A 1	3377 A 2	2143 B 1
	7362 A 2	3500 D 2	2251 A 1
	7363 A 2	3501 D 2	2253 A 1
	7364 A 2	3502 D 2	2254 A 1
	7365 B 2	3503 D 1	2300 B 3
	7500 D 2	3504 D 1	2301 C 3
	7501 E 1	3505 E 1	2302 B 3
	7502 C 1	3506 E 1	2303 C 3
	7600 E 3	3507 E 1	2304 B 3
	7601 C 1	3508 C 3	2305 B 3
	7700 D 1	3600 D 3	2306 A 3
	7730 D 2	3601 E 3	2307 A 3
	7740 A 3	3602 E 3	2308 A 2
	7741 A 3	3603 E 4	2309 A 2
	7742 A 4	3604 E 2	2310 B 3
	9000 A 1	3605 D 3	2311 B 3
	9001 B 2	3606 E 4	2312 B 3
	9002 B 2	3607 E 3	2313 C 2
	9003 B 2	3608 E 4	2314 B 3
	9004 B 2	3609 E 1	2315 B 2
	9005 B 1	3700 E 2	2316 C 3
	9006 C 3	3701 D 1	2317 A 2
	9007 E 1	3702 E 1	2330 B 2
	9008 A 3	3703 E 1	2331 C 2
	9009 A 3	3704 D 2	2332 C 2
	9010 A 1	3705 C 1	2333 C 2
	9011 B 3	3706 D 1	2334 C 2
	9012 B 3	3707 E 2	2335 B 2
	9013 A 2	3708 E 2	2336 B 3
	9014 A 2	3709 D 1	2337 B 3
	9015 E 1	3710 E 1	2338 A 3
	9016 E 1	3711 E 1	2339 C 2
	9017 B 1	3712 E 1	2500 C 1
	9018 C 1	3713 E 1	2501 C 1
	9019 D 1	3714 E 1	2502 C 1
	9020 E 1	3715 B 1	2503 E 1
	9021 C 3	3716 D 2	2504 E 1
	9022 C 3	3717 D 1	2505 D 3
	9023 C 3	3718 D 1	2600 E 4
	9024 E 1	3719 D 1	2601 E 4
	9025 D 1	3720 D 1	2602 E 3
	9026 E 2	3721 D 1	2700 D 2
	9027 D 2	3722 D 2	2701 D 1
	9028 E 2	3723 D 1	2703 D 2
	9029 D 4	3724 E 2	2704 F 3
	9030 D 4	3725 D 1	2705 F 2
	9031 D 3	3726 D 2	2706 F 2
	9032 D 3	3727 E 2	2707 F 3
	9033 D 3	3728 B 4	2708 E 3
	9034 D 3	3729 E 1	2709 E 3
	9035 D 2	3730 B 4	2710 E 3
	9036 E 2	3732 B 4	2730 D 2
	9037 D 3	3733 E 1	2740 A 3
	9038 D 2	3734 B 4	2741 A 3
	9039 D 2	3735 D 1	2742 A 3
	9040 E 3	3736 E 1	3100 A 1
	9041 E 4	3737 D 1	3101 A 1
	9042 C 1	3738 E 1	3102 C 3
	9043 C 1	3739 E 2	3107 B 1
	9044 C 4	3740 E 2	3108 B 1
	9045 C 1	3743 A 3	3109 B 1
	9046 C 1	3744 A 3	3110 B 1
	9047 D 2	3745 A 3	3111 B 1
	9048 D 2	3746 A 3	3113 A 1
	9049 C 2	3747 A 3	3114 A 1
	9050 D 1	3748 A 3	3115 A 1
	9051 D 1	3749 A 4	3116 B 1
	9052 D 1	3750 A 4	3117 B 1
	9053 D 1	3751 D 1	3140 E 4
	9054 C 2	3752 E 1	3141 E 4
	9055 C 1	3753 E 1	3142 E 3

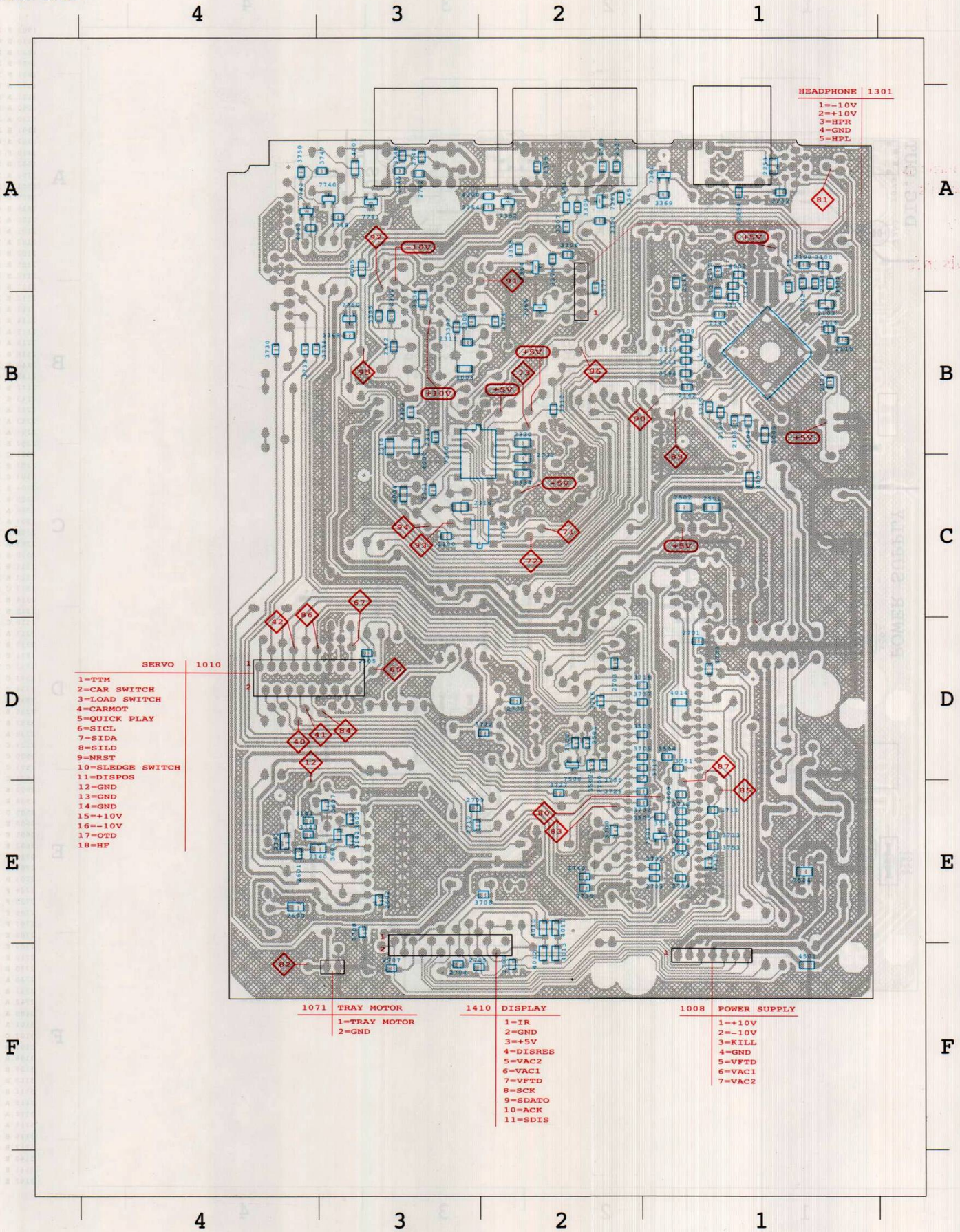

22

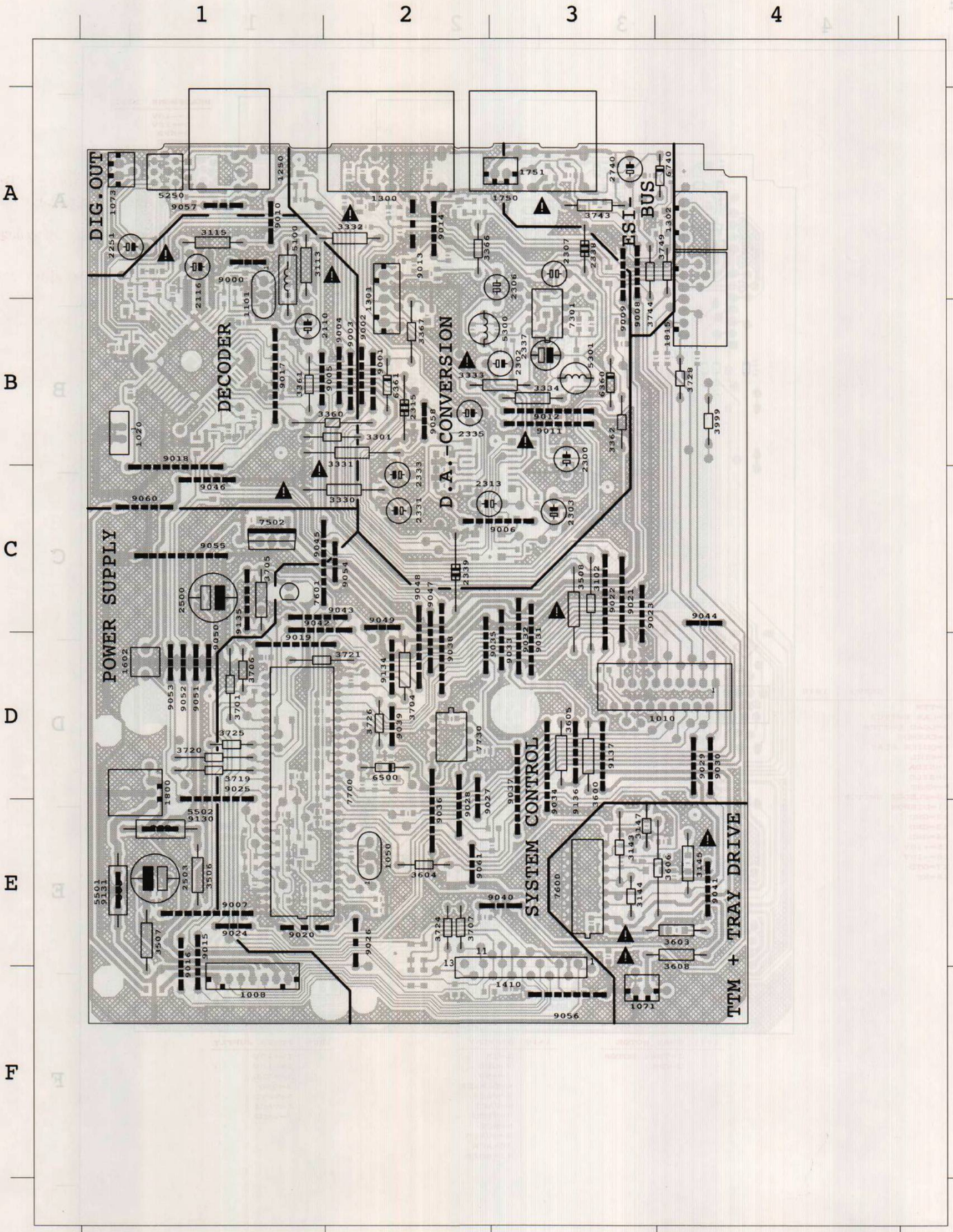

1008 F 1	3143 E 3	3999 B 4	9056 F 3
1010 D 4	3144 E 3	4000 B 3	9057 A 1
1020 B 1	3145 E 4	4001 A 3	9058 B 2
1050 E 2	3146 B 1	4002 A 1	9060 C 1
1071 F 3	3147 E 3	4003 B 3	9061 E 2
1073 A 1	3252 A 1	4004 C 3	9130 E 1
1101 A 1	3300 C 3	4005 A 3	9131 E 1
1250 A 1	3301 B 2	4006 B 1	9134 D 2
1300 A 2	3302 B 3	4009 C 1	9135 C 1
1301 B 2	3303 B 3	4010 E 2	9136 D 3
1302 A 4	3304 B 2	4011 E 2	9137 D 3
1410 F 3	3305 B 3	4012 F 2	
1602 D 1	3306 A 2	4013 F 2	
1750 A 3	3307 A 2	4014 D 1	
1751 A 3	3308 A 2	4300 A 2	
1800 D 1	3309 A 2	4301 A 2	
1815 B 4	3310 B 2	4501 F 1	
2100 A 1	3330 C 2	4740 A 4	
2101 A 1	3331 B 2	5100 A 1	
2102 A 1	3332 A 2	5250 A 1	
2103 B 1	3333 B 3	5300 B 2	
2105 B 1	3334 B 3	5301 B 3	
2110 B 1	3360 B 2	5501 E 1	
2111 B 1	3361 B 1	5502 E 1	
2112 B 1	3362 B 3	6360 B 3	
2113 A 1	3363 A 2	6361 B 2	
2114 A 1	3364 A 2	6500 D 2	
2115 A 1	3365 A 2	6740 A 4	
2116 A 1	3366 A 2	7100 B 1	
2118 B 1	3367 B 2	7300 C 2	
2140 E 3	3368 B 3	7301 B 3	
2141 E 4	3369 A 1	7302 C 2	
2142 B 1	3376 A 2	7360 B 3	
2143 B 1	3377 A 2	7361 A 1	
2251 A 1	3500 D 2	7362 A 2	
2253 A 1	3501 D 2	7363 A 2	
2254 A 1	3502 D 2	7364 A 2	
2300 B 3	3503 D 1	7365 B 2	
2301 C 3	3504 D 1	7500 D 2	
2302 B 3	3505 E 1	7501 E 1	
2303 C 3	3506 E 1	7502 C 1	
2304 B 3	3507 E 1	7600 E 3	
2305 B 3	3508 C 3	7601 C 1	
2306 A 3	3600 D 3	7700 D 1	
2307 A 3	3601 E 3	7730 D 2	
2308 A 2	3602 E 3	7740 A 3	
2309 A 2	3603 E 4	7741 A 3	
2310 B 3	3604 E 2	7742 A 4	
2311 B 3	3605 D 3	9000 A 1	
2312 B 3	3606 E 4	9001 B 2	
2313 C 2	3607 E 3	9002 B 2	
2314 B 3	3608 E 4	9003 B 2	
2315 B 2	3609 E 1	9004 B 2	
2316 C 3	3700 E 2	9005 B 1	
2317 A 2	3701 D 1	9006 C 3	
2330 B 2	3702 E 1	9007 E 1	
2331 C 2	3703 E 1	9008 A 3	
2332 C 2	3704 D 2	9009 A 3	
2333 C 2	3705 C 1	9010 A 1	
2334 C 2	3706 D 1	9011 B 3	
2335 B 2	3707 E 2	9012 B 3	
2336 B 3	3708 E 2	9013 A 2	
2337 B 3	3709 D 1	9014 A 2	
2338 A 3	3710 E 1	9015 E 1	
2339 C 2	3711 E 1	9016 E 1	
2500 C 1	3712 E 1	9017 B 1	
2501 C 1	3713 E 1	9018 C 1	
2502 C 1	3714 E 1	9019 D 1	
2503 E 1	3715 B 1	9020 E 1	
2504 E 1	3716 D 2	9021 C 3	
2505 D 3	3717 D 1	9022 C 3	
2600 E 4	3718 D 1	9023 C 3	
2601 E 4	3719 D 1	9024 E 1	
2602 E 3	3720 D 1	9025 D 1	
2700 D 2	3721 D 1	9026 E 2	
2701 D 1	3722 D 2	9027 D 2	
2703 D 2	3723 D 1	9028 E 2	
2704 F 3	3724 E 2	9029 D 4	
2705 F 2	3725 D 1	9030 D 4	
2706 F 2	3726 D 2	9031 D 3	
2707 F 3	3727 E 2	9032 D 3	
2708 E 3	3728 B 4	9033 D 3	
2709 E 3	3729 E 1	9034 D 3	
2710 E 3	3730 B 4	9035 D 2	
2730 D 2	3732 B 4	9036 E 2	
2740 A 3	3733 E 1	9037 D 3	
2741 A 3	3734 B 4	9038 D 2	
2742 A 3	3735 D 1	9039 D 2	
3100 A 1	3736 E 1	9040 E 3	
3101 A 1	3737 D 1	9041 E 4	
3102 C 3	3738 E 1	9042 C 1	
3107 B 1	3739 E 2	9043 C 1	
3108 B 1	3740 E 2	9044 C 4	
3109 B 1	3743 A 3	9045 C 1	
3110 B 1	3744 A 3	9046 C 1	
3111 B 1	3745 A 3	9047 D 2	
3113 A 1	3746 A 3	9048 D 2	
3114 A 1	3747 A 3	9049 C 2	
3115 A 1	3748 A 3	9050 D 1	
3116 B 1	3749 A 4	9051 D 1	
3117 B 1	3750 A 4	9052 D 1	
3140 E 4	3751 D 1	9053 D 1	
3141 E 4	3752 E 1	9054 C 2	
3142 E 3	3753 E 1	9055 C 1	

DAC CIRCUIT DIAGRAM

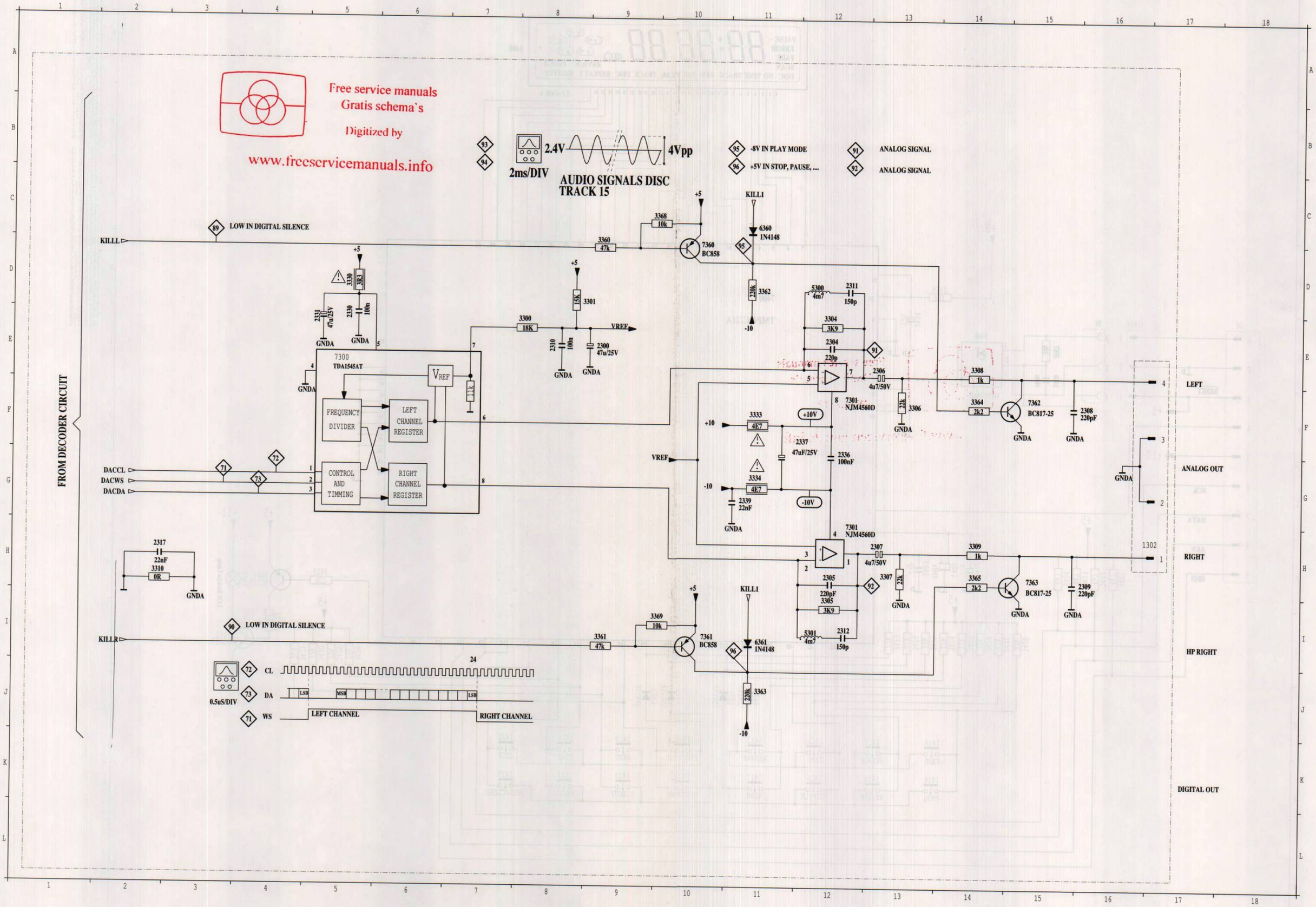

TMP47C221A/421A/921A

PIN ASSIGNMENT (TOP VIEW)

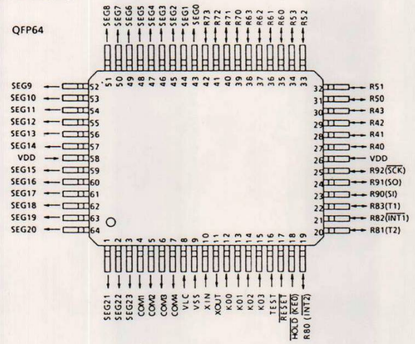

BLOCK DIAGRAM

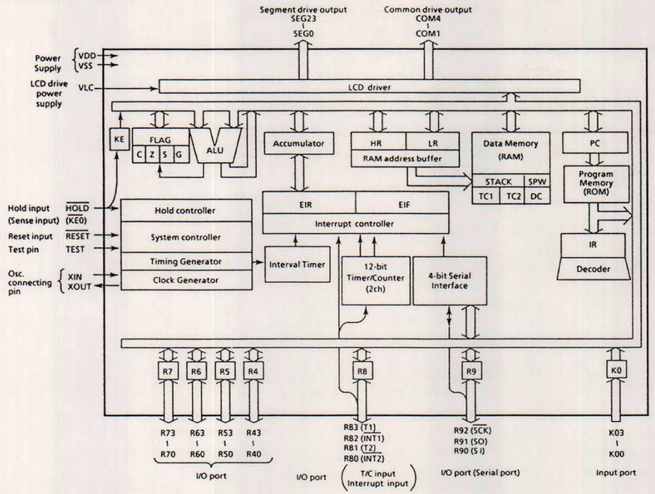

FRONT CIRCUIT DIAGRAM

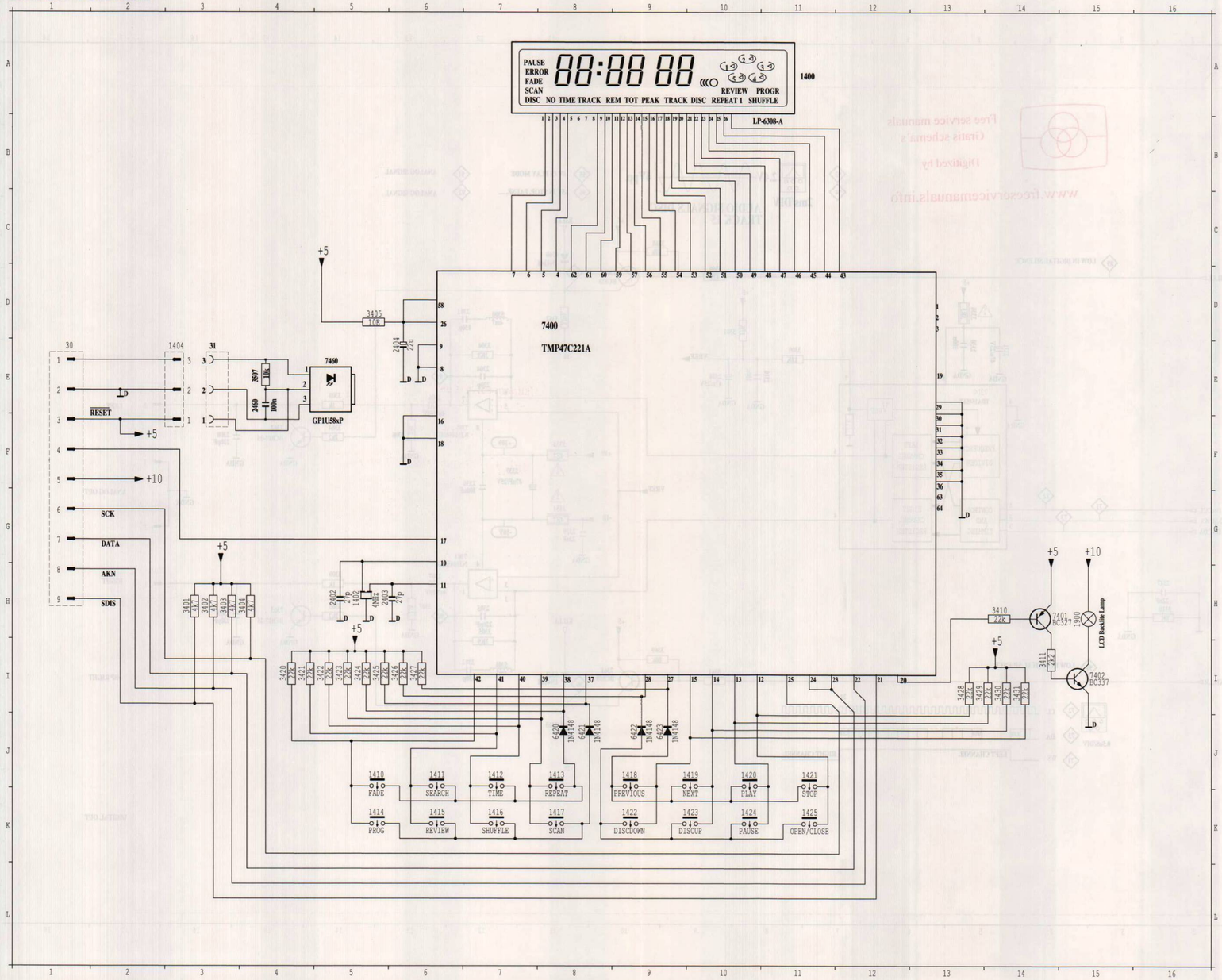

25

FRONT COMPONENT LAYOUT

1400 A 4	1404 A 8	1412 A 1	1415 B 1	1418 A 7	1421 A 8	1424 B 8	2402 A 5	3401 B 6	3404 B 6	3411 B 3	3422 A 2	3425 A 3	3428 A 5	3431 A 6	6422 B 7	7402 B 4	9403 B 3	9406 A 6	9409 B 5	9412 A 6	9415 B 6	2460 B 1
1402 A 5	1410 A 1	1413 A 2	1416 B 1	1419 A 7	1422 B 7	1425 B 8	2403 A 5	3402 B 6	3405 B 6	3420 A 3	3423 A 2	3426 B 6	3429 A 6	6420 A 3	6423 A 7	9401 B 5	9404 A 6	9407 A 6	9410 A 4	9413 A 6	----	3507 B 1
1403 A 8	1411 A 1	1414 B 1	1417 B 2	1420 A 8	1423 B 7	1900 B 4	2404 B 5	3403 B 6	3410 B 4	3421 A 3	3424 A 3	3427 B 6	3430 A 6	6421 A 3	7401 B 3	9402 B 3	9405 A 6	9408 A 6	9411 A 6	9414 A 5	1408 B 1	7460 B 1

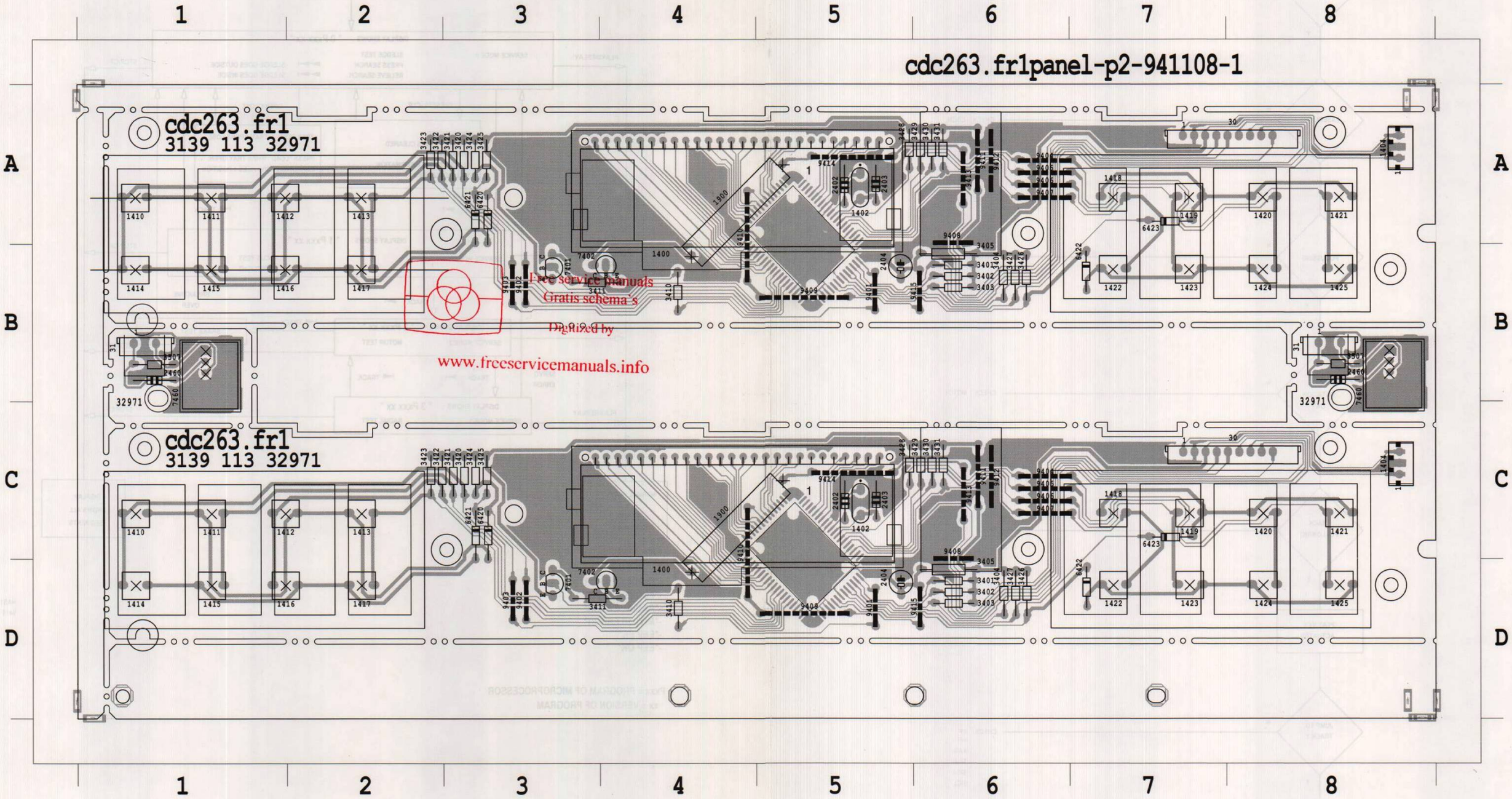

START UP PROCEDURE

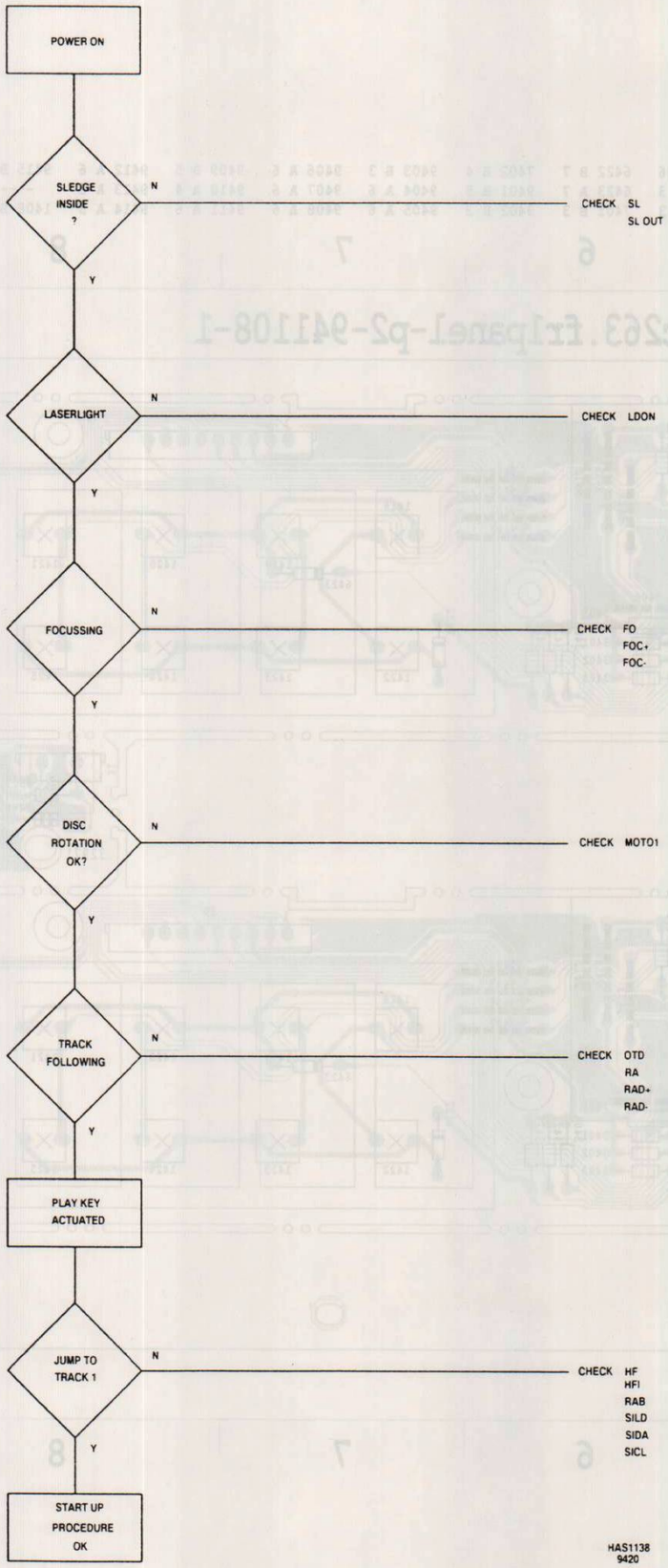

SERVICE TEST PROGRAM

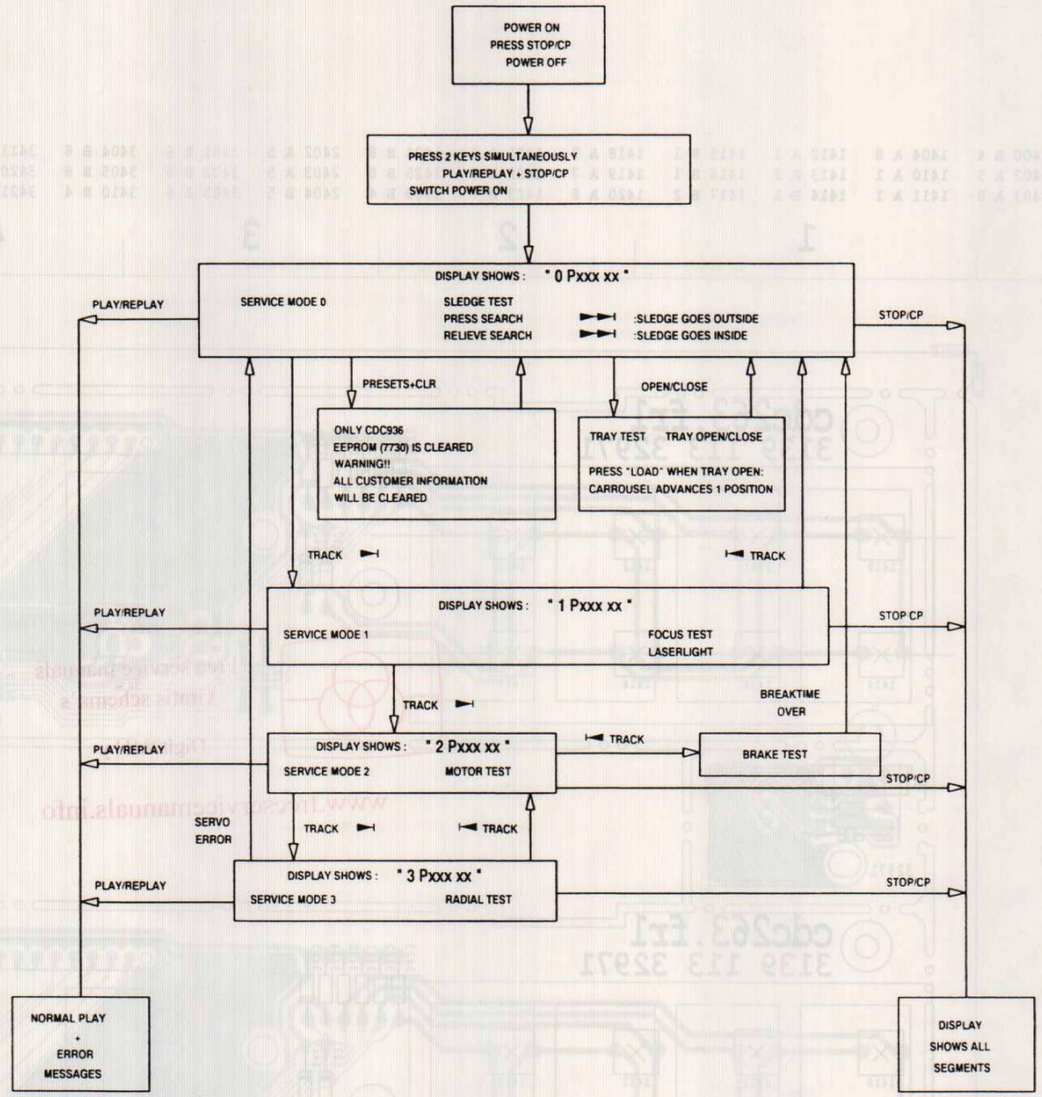

ERROR MESSAGES

- "SLEDGE ERROR"
- "FOCUS ERROR"
- "RADIAL ERROR"
- "MOTOR ERROR"
- "EEP ER"
- "EEP OK"

Pxxx = PROGRAM OF MICROPROCESSOR
xx = VERSION OF PROGRAM

HAS1137
9419

FAULTFINDING GUIDE

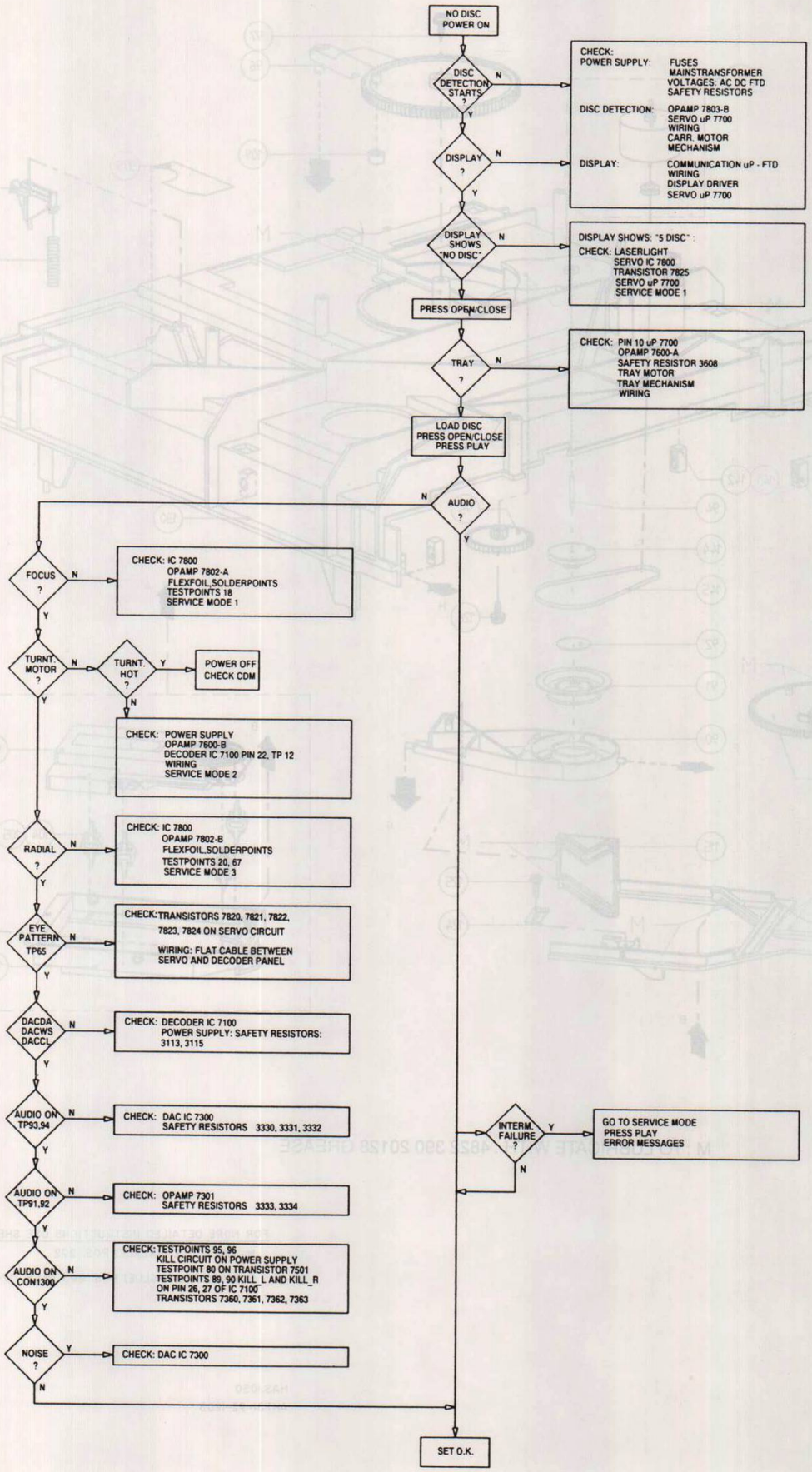

SPECIFICATIONS MEASUREMENT

SIGNAL	AUDIO SIGNALS DISC 1	TESTPOINT	REMARKS
ANALOG OUT LEFT	TOTAL HARMONIC DISTORTION TRACKS 10 - 23	FILTER OUTPUT	SEE TECHNICAL DATA SEE DRAWING
ANALOG OUT RIGHT			
ANALOG OUT LEFT	SIGNAL-TO-NOISE RATIO TRACK 1 REFERENCE LEVEL TRACK 49	FILTER OUTPUT	SEE TECHNICAL DATA SEE DRAWING
ANALOG OUT RIGHT			

FILTER = 13TH ORDER FILTER 4822 395 30204

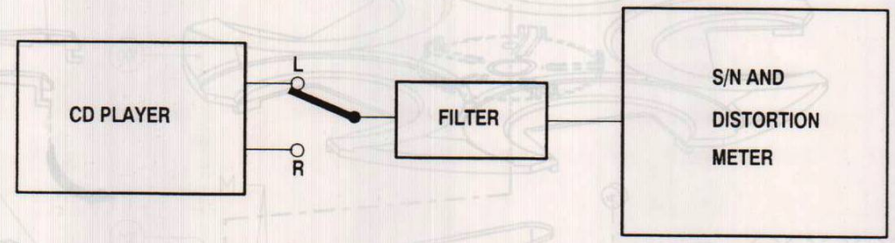

e.g. SOUND TECHNOLOGIE
ST1700B

28

EXPLODED VIEW - LOADING

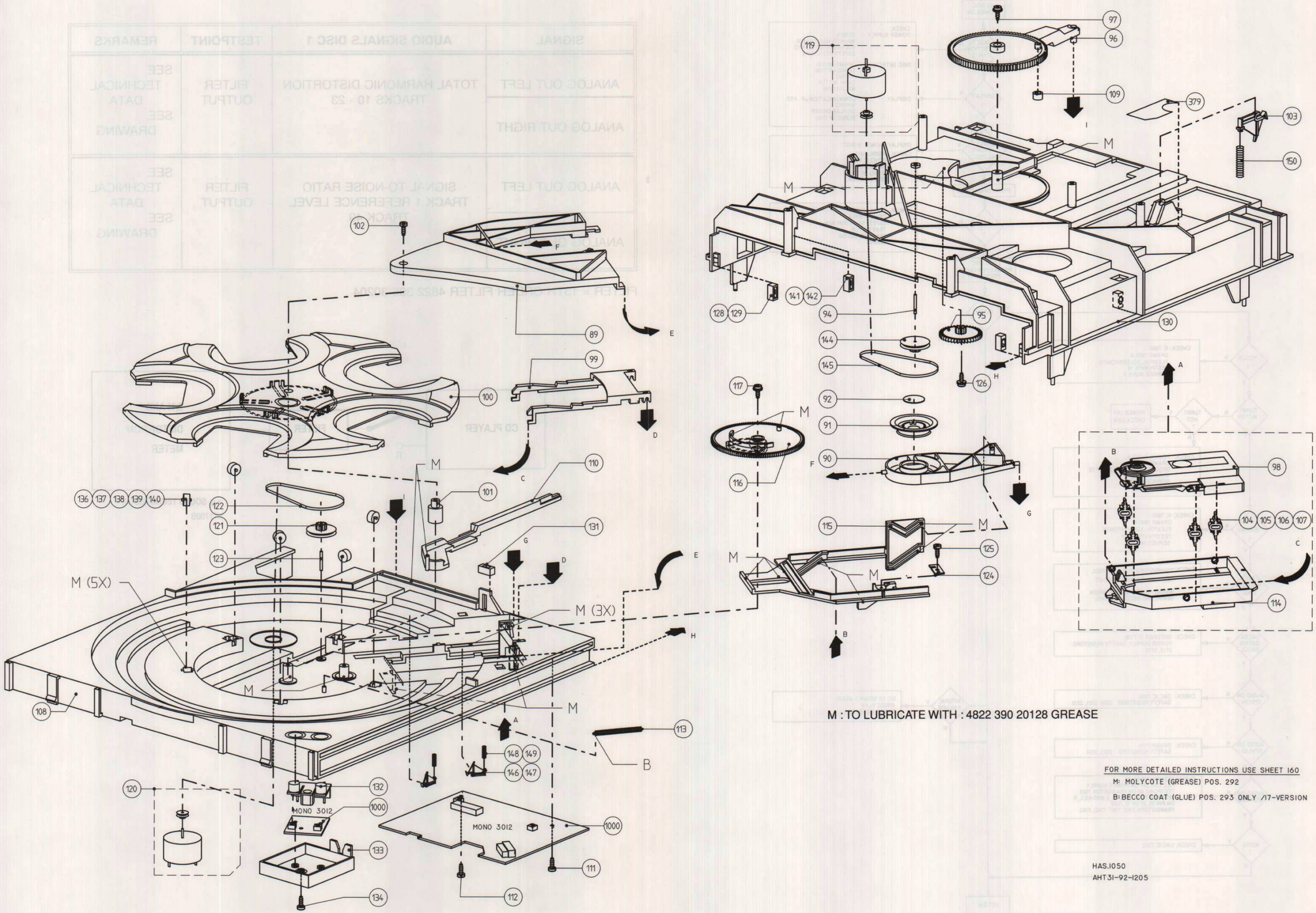

M : TO LUBRICATE WITH : 4822 390 20128 GREASE

FOR MORE DETAILED INSTRUCTIONS USE SHEET 160

M: MOLYCOTE (GREASE) POS. 292

B: BECCO COAT (GLUE) POS. 293 ONLY /17-VERSION

HAS.1050
AHT31-92-1205

PARTSLIST LOADING

89	4822 466 93131	Pressure plate
90	4822 256 91912	Pressure ring holder
91	4822 532 52386	Pressure ring
95	4822 522 33255	Gearwheel
96	4822 535 40105	Crank
98	4822 691 30278	CDM 12.1 W/o wiring
99	4822 403 70598	CDM locking
100	4822 466 93129	Rotary disc assy
101	4822 520 20758	Bearing
103	4822 401 11447	Tray tumbler
104	4822 325 50215	Suspension
105	4822 325 50215	Suspension
106	4822 325 50215	Suspension
107	4822 325 50215	Suspension
108	4822 444 30498	Tray assy
109	4822 532 51756	Damping grommet
110	4822 401 11444	Switch bracket
113	4822 492 52313	Tension spring
114	4822 256 91915	Support
115	4822 466 93134	Ide strip
116	4822 522 33256	Cam wheel
119	4822 528 50335	Motor assy
120	4822 528 50335	Motor assy
121	4822 528 50334	Pulley
122	4822 358 10115	Belt
128	4822 466 93132	Guide
129	4822 466 93132	Guide
130	4822 426 90109	Frame assy
131	4822 466 93132	Guide
132	4822 403 70599	Key unit
133	4822 466 93171	Cover plate
136	4822 528 70646	Pinch roller assy
137	4822 528 70646	Pinch roller assy
138	4822 528 70646	Pinch roller assy
139	4822 528 70646	Pinch roller assy
140	4822 528 70646	Pinch roller assy
141	4822 466 93132	Guide
142	4822 466 93132	Guide
144	4822 528 50334	Pulley
145	4822 358 10115	Belt
146	4822 402 50291	Lift tumbler
147	4822 402 50291	Lift tumbler
148	4822 492 52123	Compression spring
149	4822 492 52123	Compression spring
150	4822 492 52123	Compression spring

Note : Only the parts mentioned in this list are normal service spare parts.

Screws

97	PLASTITE M3X10 + WASHER
102	PLASTITE M3X16
111	PLASTITE M3X10
112	PLASTITE M3X10
125	PLASTITE M3X6
126	PLASTITE M3X10 + WASHER
134	PLASTITE M3X16

MECHANICAL PARTS LIST CABINET

208	4822 444 40805	Cabinet front - CDC265
208	4822 444 40804	Cabinet front - CDC263
212	4822 450 62374	Window display
213	4822 410 63558	Button set CDC
214	4822 410 63559	Button set CDC
218	4822 466 93132	Guide
222	4822 462 40683	Plate (foot)
258	4822 402 61555	Lever power
260	4822 444 61021	Cover door CDC
262	4822 532 60948	Bush
264	4822 532 60948	Bush - CDC263
266	4822 444 30497	Cover top

Note : Only the parts mentioned in this list are normal service spare parts.

220	PLASTITE TORX SCR 3 X10
225	PLASTITE TORX SCR 3 X10
228	TAPT TORX WASH SCR 3X6
233	TAPT TORX SCR M3X28
248	PLASTITE TORX SCR 3 X10
250	PLASTITE TORX SCR 3 X10
254	TAPT TORX WASH SCR 3X6
256	TAPT TORX WASH SCR 3X6
267	PLASTITE TORX SCR 3 X10
268	TAPT TORX WASH SCR 3X6
270	TAPT TORX WASH SCR 3X6

EXPLODED VIEW CABINET

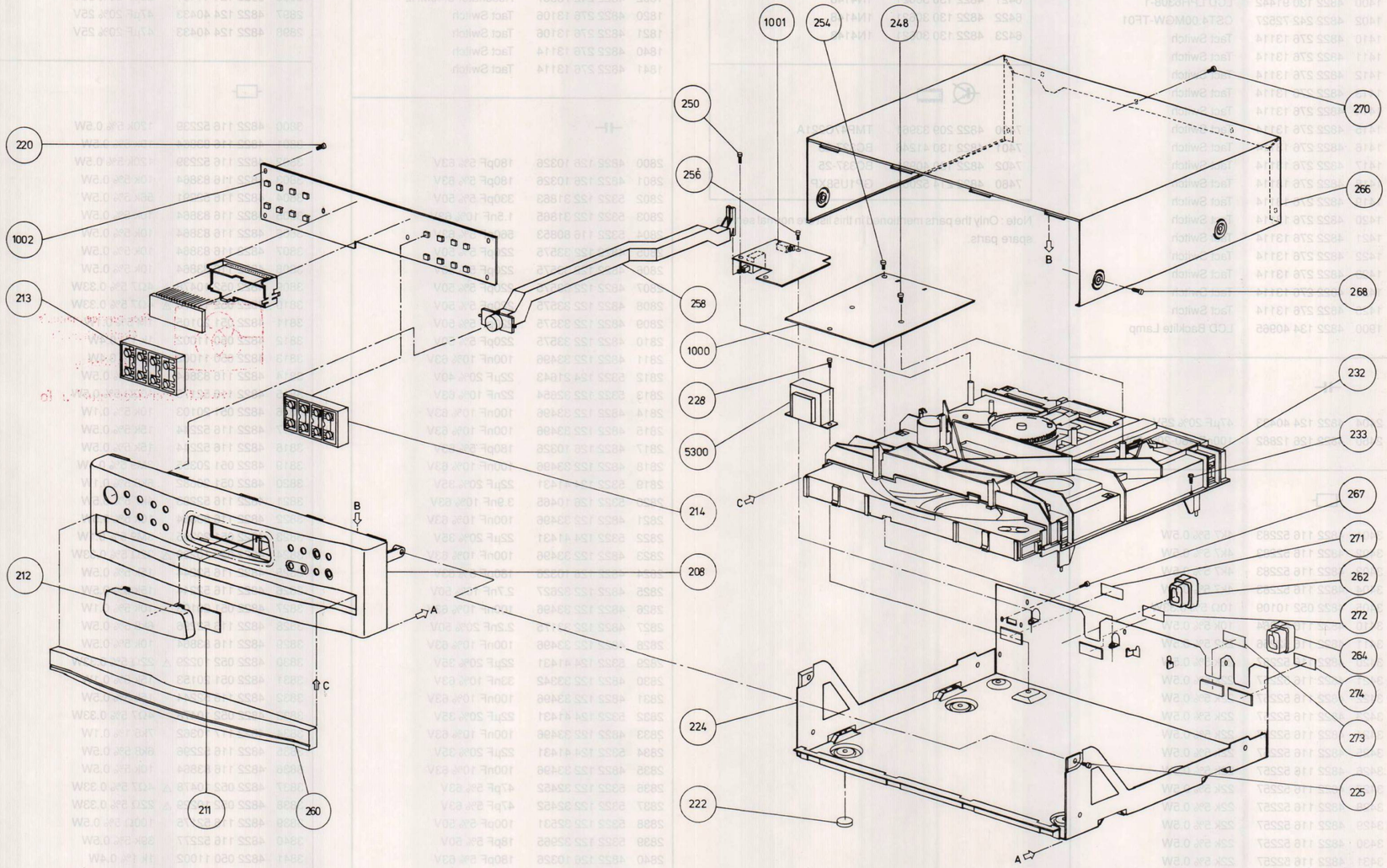

FRONT BOARD

MISCELLANEOUS

	4822 256 91477	DISPLAY HOLDER
1400	4822 130 91442	LCD LPH6308-1
1402	4822 242 72527	CST4.00MGW-TF01
1410	4822 276 13114	Tact Switch
1411	4822 276 13114	Tact Switch
1412	4822 276 13114	Tact Switch
1413	4822 276 13114	Tact Switch
1414	4822 276 13114	Tact Switch
1415	4822 276 13114	Tact Switch
1416	4822 276 13114	Tact Switch
1417	4822 276 13114	Tact Switch
1418	4822 276 13114	Tact Switch
1419	4822 276 13114	Tact Switch
1420	4822 276 13114	Tact Switch
1421	4822 276 13114	Tact Switch
1422	4822 276 13114	Tact Switch
1423	4822 276 13114	Tact Switch
1424	4822 276 13114	Tact Switch
1425	4822 276 13114	Tact Switch
1900	4822 134 40965	LCD Backlite Lamp

2404	4822 124 40433	47µF 20% 25V
2460	4822 126 12882	100nF +80-20% 50V

3401	4822 116 52283	4k7 5% 0.5W
3402	4822 116 52283	4k7 5% 0.5W
3403	4822 116 52283	4k7 5% 0.5W
3404	4822 116 52283	4k7 5% 0.5W
3405	4822 052 10109	10Ω 5% 0.33W
3410	4822 116 83864	10k 5% 0.5W
3411	4822 116 52256	2k2 5% 0.5W
3420	4822 116 52257	22k 5% 0.5W
3421	4822 116 52257	22k 5% 0.5W
3422	4822 116 52257	22k 5% 0.5W
3423	4822 116 52257	22k 5% 0.5W
3424	4822 116 52257	22k 5% 0.5W
3425	4822 116 52257	22k 5% 0.5W
3426	4822 116 52257	22k 5% 0.5W
3427	4822 116 52257	22k 5% 0.5W
3428	4822 116 52257	22k 5% 0.5W
3429	4822 116 52257	22k 5% 0.5W
3430	4822 116 52257	22k 5% 0.5W
3431	4822 116 52257	22k 5% 0.5W
3507	4822 116 83864	10k 5% 0.5W

6420	4822 130 30621	1N4148
6421	4822 130 30621	1N4148
6422	4822 130 30621	1N4148
6423	4822 130 30621	1N4148

7400	4822 209 33961	TMP47C221A
7401	4822 130 41246	BC327-25
7402	4822 130 40981	BC337-25
7460	4822 214 52009	GP1U58XP

Note : Only the parts mentioned in this list are normal service spare parts.

SERVO BOARD

MISCELLANEOUS

	4822 323 50157	Flexfoil 18pin
1802	4822 242 73557	Resonator 8.46MHz
1820	4822 276 13106	Tact Switch
1821	4822 276 13106	Tact Switch
1840	4822 276 13114	Tact Switch
1841	4822 276 13114	Tact Switch

2800	4822 126 10326	180pF 5% 63V
2801	4822 126 10326	180pF 5% 63V
2802	5322 122 31863	330pF 5% 50V
2803	5322 122 31865	1.5nF 10% 63V
2804	5322 116 80853	560pF 5% 63V
2805	4822 122 33575	220pF 5% 50V
2806	4822 122 33575	220pF 5% 50V
2807	4822 122 33575	220pF 5% 50V
2808	4822 122 33575	220pF 5% 50V
2809	4822 122 33575	220pF 5% 50V
2810	4822 122 33575	220pF 5% 50V
2811	4822 122 33496	100nF 10% 63V
2812	5322 124 21643	22µF 20% 40V
2813	5322 122 32654	22nF 10% 63V
2814	4822 122 33496	100nF 10% 63V
2815	4822 122 33496	100nF 10% 63V
2817	4822 126 10326	180pF 5% 63V
2818	4822 122 33496	100nF 10% 63V
2819	5322 124 41431	22µF 20% 35V
2820	5322 126 10465	3.9nF 10% 63V
2821	4822 122 33496	100nF 10% 63V
2822	5322 124 41431	22µF 20% 35V
2823	4822 122 33496	100nF 10% 63V
2824	4822 126 10326	180pF 5% 63V
2825	4822 122 32627	2.7nF 10% 50V
2826	4822 122 33496	100nF 10% 63V
2827	4822 122 33175	2.2nF 20% 50V
2828	4822 122 33496	100nF 10% 63V
2829	5322 124 41431	22µF 20% 35V
2830	4822 122 33342	33nF 10% 63V
2831	4822 122 33496	100nF 10% 63V
2832	5322 124 41431	22µF 20% 35V
2833	4822 122 33496	100nF 10% 63V
2834	5322 124 41431	22µF 20% 35V
2835	4822 122 33496	100nF 10% 63V
2836	5322 122 32452	47pF 5% 63V
2837	5322 122 32452	47pF 5% 63V
2838	5322 122 32531	100pF 5% 50V
2839	5322 122 32965	18pF 5% 50V
2840	4822 126 10326	180pF 5% 63V
2841	5322 124 21643	22µF 20% 40V
2842	5322 122 31863	330pF 5% 50V
2843	4822 126 10326	180pF 5% 63V

2856	4822 122 33496	100nF 10% 63V
2896	5322 124 41431	22µF 20% 35V
2897	4822 124 40433	47µF 20% 25V
2898	4822 124 40433	47µF 20% 25V

3800	4822 116 52239	120k 5% 0.5W
3801	4822 116 83864	10k 5% 0.5W
3802	4822 116 52239	120k 5% 0.5W
3803	4822 116 83864	10k 5% 0.5W
3804	4822 116 52291	56k 5% 0.5W
3805	4822 116 83864	10k 5% 0.5W
3806	4822 116 83864	10k 5% 0.5W
3807	4822 116 83864	10k 5% 0.5W
3808	4822 116 83864	10k 5% 0.5W
3809	4822 052 10478 ⚠	4Ω7 5% 0.33W
3810	4822 052 10478 ⚠	4Ω7 5% 0.33W
3811	4822 051 20105	1M 5% 0.1W
3812	4822 050 11002	1k 1% 0.4W
3813	4822 050 11002	1k 1% 0.4W
3814	4822 116 83864	10k 5% 0.5W
3815	4822 116 52175	100Ω 5% 0.5W
3816	4822 051 20103	10k 5% 0.1W
3817	4822 116 52244	15k 5% 0.5W
3818	4822 116 52244	15k 5% 0.5W
3819	4822 051 20395	3M9 5% 0.1W
3820	4822 051 20682	6k8 5% 0.1W
3821	4822 116 52283	4k7 5% 0.5W
3822	4822 116 83864	10k 5% 0.5W
3823	4822 051 20395	3M9 5% 0.1W
3824	4822 052 10229 ⚠	22Ω 5% 0.33W
3825	4822 116 52244	15k 5% 0.5W
3826	4822 116 52244	15k 5% 0.5W
3827	4822 051 20103	10k 5% 0.1W
3828	4822 116 52296	6k8 5% 0.5W
3829	4822 116 83864	10k 5% 0.5W
3830	4822 052 10229 ⚠	22Ω 5% 0.33W
3831	4822 051 20153	15k 5% 0.1W
3832	4822 116 52244	15k 5% 0.5W
3833	4822 052 10478	4Ω7 5% 0.33W
3834	4822 117 10362	7k5 1% 0.1W
3835	4822 116 52296	6k8 5% 0.5W
3836	4822 116 83864	10k 5% 0.5W
3837	4822 052 10478 ⚠	4Ω7 5% 0.33W
3838	4822 052 10229 ⚠	22Ω 5% 0.33W
3839	4822 116 52175	100Ω 5% 0.5W
3840	4822 116 52277	39k 5% 0.5W
3841	4822 050 11002	1k 1% 0.4W
3842	4822 116 52175	100Ω 5% 0.5W
3843	4822 116 52249	1k8 5% 0.5W
3844	4822 116 52175	100Ω 5% 0.5W

3845	4822 051 20431	430Ω 5% 0.1W
3846	4822 051 20431	430Ω 5% 0.1W
3847	4822 051 20334	330k 5% 0.1W
3849	4822 051 20303	30k 5% 0.1W
3850	4822 050 11002	1k 1% 0.4W
3851	4822 051 20362	3k6 5% 0.1W
3852	4822 116 52175	100Ω 5% 0.5W
3853	4822 116 52249	1k8 5% 0.5W
3854	4822 050 11002	1k 1% 0.4W
3855	4822 051 20431	430Ω 5% 0.1W
4850	4822 116 52231	820Ω 5% 0.5W
4851	4822 116 52238	12k 5% 0.5W
4852	4822 051 20123	12k 5% 0.1W
4853	4822 116 52238	12k 5% 0.5W
4854	4822 116 52238	12k 5% 0.5W
4855	4822 052 10229 ⚠	22Ω 5% 0.33W
4856	4822 052 10108 ⚠	1Ω 5% 0.33W
4857	4822 116 52284	47k 5% 0.5W
4858	4822 116 52284	47k 5% 0.5W
4890	4822 051 20271	270Ω 5% 0.1W
4891	4822 116 52217	270Ω 5% 0.5W
4892	4822 116 52217	270Ω 5% 0.5W
4893	4822 116 52217	270Ω 5% 0.5W
4894	4822 051 10008	0Ω 5% 0.25W
4895	4822 051 10008	0Ω 5% 0.25W
4896	4822 051 10008	0Ω 5% 0.25W
4897	4822 051 10008	0Ω 5% 0.25W
4898	4822 051 10008	0Ω 5% 0.25W
4899	4822 051 10008	0Ω 5% 0.25W

5801	4822 157 53447	Fixed Ind. 100MHz
5802	4822 157 53447	Fixed Ind. 100MHz

7800	4822 209 31064	TDA1301T/N1
7801	4822 209 80817	L7805CV
7802	4822 209 72587	TCA0372
7803	4822 209 72587	TCA0372
7820	4822 130 60887	BF840
7821	5322 130 41982	BC848B
7822	5322 130 41983	BC848B
7823	5322 130 41982	BC848B
7824	5322 130 41982	BC848B
7825	4822 130 42675	BC818

Note : Only the parts mentioned in this list are normal service spare parts.

31

DECODER BOARD

MISCELLANEOUS

	4822 255 40991	LED Socket
1010	4822 267 51094	Flex Connector
1050	5322 242 73686	Resonator 12MHz
1101	4822 242 80997	Crystal 33.8688MHz
1602	4822 276 13106	Tact Switch

2100	4822 122 33175	2.2nF 20% 50V
2101	5322 122 32452	47pF 5% 63V
2102	5322 122 32654	22nF 10% 63V
2103	4822 122 33496	100nF 10% 63V
2105	5322 122 32531	100pF 5% 50V
2110	4822 124 40433	47µF 20% 25V
2111	5322 122 32654	22nF 10% 63V
2113	5322 122 32452	47pF 5% 63V
2115	4822 122 33496	100nF 10% 63V
2116	4822 124 40433	47µF 20% 25V
2140	4822 122 32542	47nF 10% 63V
2141	4822 122 33496	100nF 10% 63V
2142	5322 122 32452	47pF 5% 63V
2143	5322 122 32654	22nF 10% 63V
2300	4822 124 41397	47µF 20% 25V
2304	4822 122 33575	220pF 5% 50V
2305	4822 122 33575	220pF 5% 50V
2306	4822 124 40433	47µF 20% 25V
2307	4822 124 40433	47µF 20% 25V
2308	4822 122 33575	220pF 5% 50V
2309	4822 122 33575	220pF 5% 50V
2310	4822 122 33496	100nF 10% 63V
2316	4822 122 33496	100nF 10% 63V
2317	5322 122 32654	22nF 10% 63V
2331	4822 124 40433	47µF 20% 25V
2336	4822 122 33496	100nF 10% 63V
2337	4822 124 40433	47µF 20% 25V
2338	4822 126 11585	22nF +80-20% 25V
2339	4822 126 11585	22nF +80-20% 25V
2501	4822 122 33496	100nF 10% 63V
2502	4822 122 33496	100nF 10% 63V
2504	4822 122 33496	100nF 10% 63V
2506	4822 124 40242	1µF 20% 63V
2600	4822 122 33496	100nF 10% 63V
2601	5322 122 32654	22nF 10% 63V
2602	5322 122 32654	22nF 10% 63V
2701	5322 122 32654	22nF 10% 63V
2703	5322 122 32654	22nF 10% 63V
2704	5322 122 32531	100pF 5% 50V
2705	5322 122 32531	100pF 5% 50V
2706	5322 122 32531	100pF 5% 50V
2707	5322 122 32654	22nF 10% 63V
2711	5322 122 32452	47pF 5% 63V

2740	4822 124 40433	47µF 20% 25V
2741	5322 122 32654	22nF 10% 63V
2743	5322 122 32654	22nF 10% 63V

3100	4822 051 20222	2k2 5% 0.1W
3101	4822 051 20223	22k 5% 0.1W
3102	4822 116 52175	100Ω 5% 0.5W
3107	4822 051 20331	330Ω 5% 0.1W
3108	4822 051 20221	220Ω 5% 0.1W
3109	4822 051 20221	220Ω 5% 0.1W
3110	4822 051 20221	220Ω 5% 0.1W
3111	4822 051 20221	220Ω 5% 0.1W
3113	4822 052 10338 ⚠	3Ω3 5% 0.33W
3114	4822 051 20105	1M 5% 0.1W
3115	4822 052 10338 ⚠	3Ω3 5% 0.33W
3117	4822 051 20008	0Ω Jumper
3120	4822 051 20562	5k6 5% 0.1W
3140	4822 051 20333	33k 5% 0.1W
3141	4822 051 20333	33k 5% 0.1W
3142	4822 051 20333	33k 5% 0.1W
3143	4822 116 52234	100k 5% 0.5W
3144	4822 116 52234	100k 5% 0.5W
3145	4822 052 10229 ⚠	22Ω 5% 0.33W
3146	4822 051 20101	100Ω 5% 0.1W
3147	4822 116 52283	4k7 5% 0.5W
3300	4822 051 20183	18k 5% 0.1W
3301	4822 116 52244	15k 5% 0.5W
3302	4822 051 20008	0Ω Jumper
3303	4822 051 20008	0Ω Jumper
3304	4822 051 20392	3k9 5% 0.1W
3305	4822 051 20392	3k9 5% 0.1W
3306	4822 051 20223	22k 5% 0.1W
3307	4822 051 20223	22k 5% 0.1W
3308	4822 051 10102	1k 2% 0.25W
3309	4822 051 10102	1k 2% 0.25W
3310	4822 051 20008	0Ω Jumper
3330	4822 052 10338 ⚠	3Ω3 5% 0.33W
3333	4822 052 10478 ⚠	4Ω7 5% 0.33W
3334	4822 052 10478 ⚠	4Ω7 5% 0.33W
3360	4822 116 52284	47k 5% 0.5W
3361	4822 116 52284	47k 5% 0.5W
3362	4822 116 83874	220k 5% 0.5W
3363	4822 051 20224	220k 5% 0.1W
3364	4822 051 20222	2k2 5% 0.1W
3365	4822 051 20222	2k2 5% 0.1W
3368	4822 051 20103	10k 5% 0.1W
3369	4822 051 20103	10k 5% 0.1W
3500	4822 051 20561	560Ω 5% 0.1W
3501	4822 051 10102	1k 2% 0.25W

3502	4822 051 20223	22k 5% 0.1W
3503	4822 051 20223	22k 5% 0.1W
3504	4822 051 20223	22k 5% 0.1W
3505	4822 051 20472	4k7 5% 0.1W
3508	4822 052 10108 ⚠	1Ω 5% 0.33W
3601	4822 051 20123	12k 5% 0.1W
3602	4822 051 20123	12k 5% 0.1W
3603	4822 052 10229 ⚠	22Ω 5% 0.33W
3604	4822 116 52276	3k9 5% 0.5W
3606	4822 116 52238	12k 5% 0.5W
3607	4822 051 20123	12k 5% 0.1W
3608	4822 052 10108 ⚠	1Ω 5% 0.33W
3609	4822 051 20224	220k 5% 0.1W
3700	4822 051 20224	220k 5% 0.1W
3701	4822 116 52257	22k 5% 0.5W
3703	4822 051 20223	22k 5% 0.1W
3706	4822 116 52257	22k 5% 0.5W
3707	4822 116 52257	22k 5% 0.5W
3708	4822 051 20223	22k 5% 0.1W
3709	4822 051 20223	22k 5% 0.1W
3710	4822 051 20223	22k 5% 0.1W
3712	4822 051 20223	22k 5% 0.1W
3713	4822 051 20223	22k 5% 0.1W
3715	4822 051 20103	10k 5% 0.1W
3716	4822 051 20472	4k7 5% 0.1W
3717	4822 051 20223	22k 5% 0.1W
3718	4822 051 20223	22k 5% 0.1W
3719	4822 050 11002	1k 1% 0.4W
3720	4822 050 11002	1k 1% 0.4W
3723	4822 051 20223	22k 5% 0.1W
3724	4822 116 52257	22k 5% 0.5W
3725	4822 050 11002	1k 1% 0.4W
3726	4822 116 52257	22k 5% 0.5W
3727	4822 051 20562	5k6 5% 0.1W
3735	4822 051 20223	22k 5% 0.1W
3736	4822 051 20223	22k 5% 0.1W
3737	4822 051 20223	22k 5% 0.1W
3738	4822 051 20223	22k 5% 0.1W
3740	4822 051 20223	22k 5% 0.1W
3741	4822 051 10102	1k 2% 0.25W
3742	4822 051 10102	1k 2% 0.25W
3743	4822 052 10109	10Ω 5% 0.33W
3744	4822 116 52175	100Ω 5% 0.5W
3745	4822 051 20473	47k 5% 0.1W
3746	4822 051 20183	18k 5% 0.1W
3748	4822 051 20473	47k 5% 0.1W
3751	4822 051 10102	1k 2% 0.25W
3753	4822 051 20223	22k 5% 0.1W
3754	4822 051 10102	1k 2% 0.25W
3755	4822 051 10102	1k 2% 0.25W
3756	4822 051 10102	1k 2% 0.25W
3999	4822 116 52257	22k 5% 0.5W

4001	4822 051 10008	0Ω 5% 0.25W
4002	4822 051 20008	0Ω Jumper
4003	4822 051 10008	0Ω 5% 0.25W
4004	4822 051 10008	0Ω 5% 0.25W
4005	4822 051 10008	0Ω 5% 0.25W
4006	4822 051 10008	0Ω 5% 0.25W
4009	4822 051 10008	0Ω 5% 0.25W
4011	4822 051 10008	0Ω 5% 0.25W
4012	4822 051 10008	0Ω 5% 0.25W
4014	4822 051 10008	0Ω 5% 0.25W
4015	4822 051 20008	0Ω Jumper
4016	4822 051 20008	0Ω Jumper
4300	4822 051 20008	0Ω Jumper
4301	4822 051 20008	0Ω Jumper

6360	4822 130 30621	1N4148
6361	4822 130 30621	1N4148
6500	4822 130 31981	BZX79-C3V9

7100	4822 209 33339	SAA7345GP/M5
7300	4822 209 33164	TDA1545AT/N2
7301	4822 209 83274	NJM4560D
7302	4822 209 33164	TDA1545AT/N2
7360	4822 130 62748	BC858
7361	4822 130 62748	BC858
7362	4822 130 42804	BC817-25
7363	4822 130 42804	BC817-25
7500	4822 130 62748	BC858
7501	4822 130 62748	BC858
7502	4822 209 80817	L7805CV
7600	4822 209 72587	TCA0372
7601	4822 130 83031	BPW85A
7700	4822 209 33962	MC68HC11ER
7741	4822 130 61207	BC848

Note : Only the parts mentioned in this list are normal service spare parts.

SUPPLY BOARD

MISCELLANEOUS

1500	4822 276 13489	Tact Switch
1501	4822 071 51001 ⚠	Fuse RAD T 100mA 250V
1543	4822 272 10269 ⚠	Voltage selector

2500	4822 126 11585	22nF +80-20% 25V
2502	4822 126 11585	22nF +80-20% 25V
2503	4822 126 11585	22nF +80-20% 25V
2504	4822 126 11585	22nF +80-20% 25V
2506	4822 124 40784	3300µF 20% 16V
2507	4822 126 12882	100nF +80-20% 50V
2510	4822 124 80148	2200µF 20% 16V
2512	4822 124 40433	47µF 20% 25V
2513	5322 124 22229	1000µF 20% 35V
2514	4822 124 40433	47µF 20% 25V
2560	4822 124 22225	330µF 20% 16V

3560	4822 050 11002	1k 1% 0.4W
3561	4822 116 52207	1k2 5% 0.5W
3562	4822 116 52211	150Ω 5% 0.5W

6500	4822 130 80291	1N4002GP
6502	4822 130 80291	1N4002GP
6503	4822 130 80291	1N4002GP
6504	4822 130 80291	1N4002GP
6560	4822 130 80291	1N4002GP
6561	4822 130 80291	1N4002GP
6562	4822 130 31981	BZX79-C3V9
6563	4822 130 34197	BZX79-C12

7503	4822 130 40823 ⚠	BD135

Note : Only the parts mentioned in this list are normal service spare parts.

MISCELLANEOUS ITEM

MISCELLANEOUS

4822 218 10546	Remote Control - CDC265
4822 736 22293	IFU (GB-S-F-C)
4822 321 62488	Mono cable - CDC263
4822 321 62381	Audio cord
4822 321 10809 ⚠	Main cord - CDC265
4822 321 10853 ⚠	Main cord - CDC263

5300	4822 146 31438 ⚠	Transformer

Note : Only the parts mentioned in this list are normal service spare parts.