PIONEER
The Art of Entertainment

Service Manual

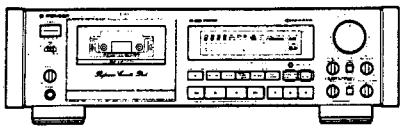

ORDER NO.
ARP2216

STEREO CASSETTE DECK

CT-979

CT-979 HAS THE FOLLOWING:

Type	Power Requirement	Remarks
HEM	AC220V–230V, 230V–240V (switchable) *	
HB	AC220V–230V, 230V–240V (switchable) *	

*Change the primary wiring of the power transformer.

- **This manual is applicable to the HEM and HB types.**
- **Ce manuel pour le service comprend les explications de réglage en français.**
- **Este manual de servicio trata del método ajuste escrito en español.**

CONTENTS

1. EXPLODED VIEWS AND PARTS LIST 2
2. PACKING 9
3. SCHEMATIC DIAGRAM 10
4. P.C. BOARDS CONNECTION DIAGRAM 17
5. P.C.B's PARTS LIST 25
6. ADJUSTMENTS 30
6. RÉGLAGE 35
6. AJUSTE 40
7. IC DESCRIPTIONS 45
8. SPECIFICATIONS 53
9. PANEL FACILITIES 54

PIONEER ELECTRONIC CORPORATION 4-1, Meguro 1-Chome, Meguro-ku, Tokyo 153, Japan
PIONEER ELECTRONICS SERVICE INC. P.O. Box 1760, Long Beach, California 90801 U.S.A.
PIONEER ELECTRONICS OF CANADA, INC. 505 Cochrane Drive, Markham, Ontario L3R 8E3 Canada
PIONEER ELECTRONIC [EUROPE] N.V. Keetberglaan 1, 9120 Beveren, Belgium
PIONEER ELECTRONICS AUSTRALIA PTY. LTD. 178-184 Boundary Road, Braeside, Victoria 3195, Australia TEL: [03] 580-9911

© PIONEER ELECTRONIC CORPORATION 1991

SI APR. 1991 Printed in Japan

1. EXPLODED VIEWS AND PARTS LIST

NOTES:

- Parts without part number cannot be supplied.
- The ⚠ mark found on some component parts indicates the importance of the safety factor of the part. Therefore, when replacing, be sure to use parts of identical designation.
- Parts marked by "⊙" are not always kept in stock. Their delivery time may be longer than usual or they may be unavailable.

1.1 PARTS LIST OF EXTERIOR

Mark	No.	Description	Part No.
	1	Cord stopper	CM – 22B
⚠	2	AC power cord (For HEM type)	ADG1036
⚠		AC power cord (For HB type)	PDG1036
⚠	3	FU703, FU704 Fuse (T2A)	REK – 103
⚠	4	Power transformer (T1)	RTT1158
	5	LED (D3)	SLF – 401C
	6	Absorber plate (B)	PNB1109
	7	Washer	RBF1019
	8	Button spring	RBH1144
	9	Door spring (L)	RBH1222
	10	Door spring (R)	RBH1223
	11	Cassette plate spring	RBL – 059
	12	Stabilizer (B)	REB1038
⚠	13	FU701, FU702 Audio fuse (T630mA)	REK – 098
	14	Screw	BBZ30P100FCC
	15	Cord clamper	
	16	Washer	ABE1009
	17	Leg assembly	AMR1159
	18	VR ring	RAT1007
	19	Screw	BBZ30P060FCC
	20	Screw	BBZ26P100FMC
	21	Counter reset knob	RAA1009
	22	Power button	RAC1410
	23	Function knob	RAC1411
	24	Slide SW knob	RAC1562
	25	Push knob	RAC1413
	26	Knob (B)	RAC1414
	27	Mode knob	RAC1609
	28	FL filter	RAH1542
	29	Side rubber	REB1094
	30	Door sheet	REB1119
	31	Knob (ABS)	RAC1608
	32	BIAS lens	RNK1674
	33	Line straight lens	RNK1682
	34	Door	RNK1495
	35	VR knob assembly (A)	RXA1281
	36	Door panel	
	37	FL lens	RLP1027
	38	Rear panel	
	39	Screw	ABZ26P080FZK
	40	Screw	BBT30P060FCC
	41	Screw	BBT30P100FZK
	42	Screw	BBZ30P100FZK
	43	Screw (FE)	RBA1090
	44	Screw	IBZ30P060FCC
	45	Screw	IBZ30P100FCC
	46	Screw	IBZ40P080FCC
	47	Jack nut	RBN – 006
	48	Binder	REC – 371
	49	Cassette plate assembly	RXX1064
	50	Bonnet	RXX1279
	51	Front panel assembly	RXX1382
	52	Door lens	RLP1026
	53	Screw	BBT30P080FCU
	54	Screw	BBZ30P080FZK
	55	Screw	PMA30P060FCU
	56	Screw (FE)	RBA1088
	57	Door cushion	REB1117
	58	Screw (FE)	RBA1089
	59	Nylon rivet	RBM – 003
	60	Door assembly	RXX1416
	101	Main unit	
	102	Headphone unit	
	103	Power switch unit	
	104	Operation unit	
	105	Control unit	
	106	Timer switch unit	
	107	Input VR unit	
	108	Pin jack unit	
	109	Rubber spacer (A)	
	110	Wire	
	111	Transformer sheet	
	112	Mechanism sheet	
	113	Mechanism sheet (2)	
	114	VR shaft	
	115	Main chassis	
	116	Center stay	
	117	P.C.B base	
	118	Binder	
	119	VR holder	
	120	FL shield plate	
	121	Joint	
	122	VR shaft guide	
	123	P.C.B stad	
	124	Panel stay	RNT1108
	125	Name plate	
	126	Cassette plate	
	127	Front panel	
	128	Mechanism unit	
	129	Motor bracket (FE)	
	130	Protector 300 × 10	RED1020
	131	Cushion	
	132	Acetate tape 10 × 10	
	133	PS holder	
	134	Acetate tape (K)	
	135	Motor VR unit	
	136	HX SW unit	

Exterior

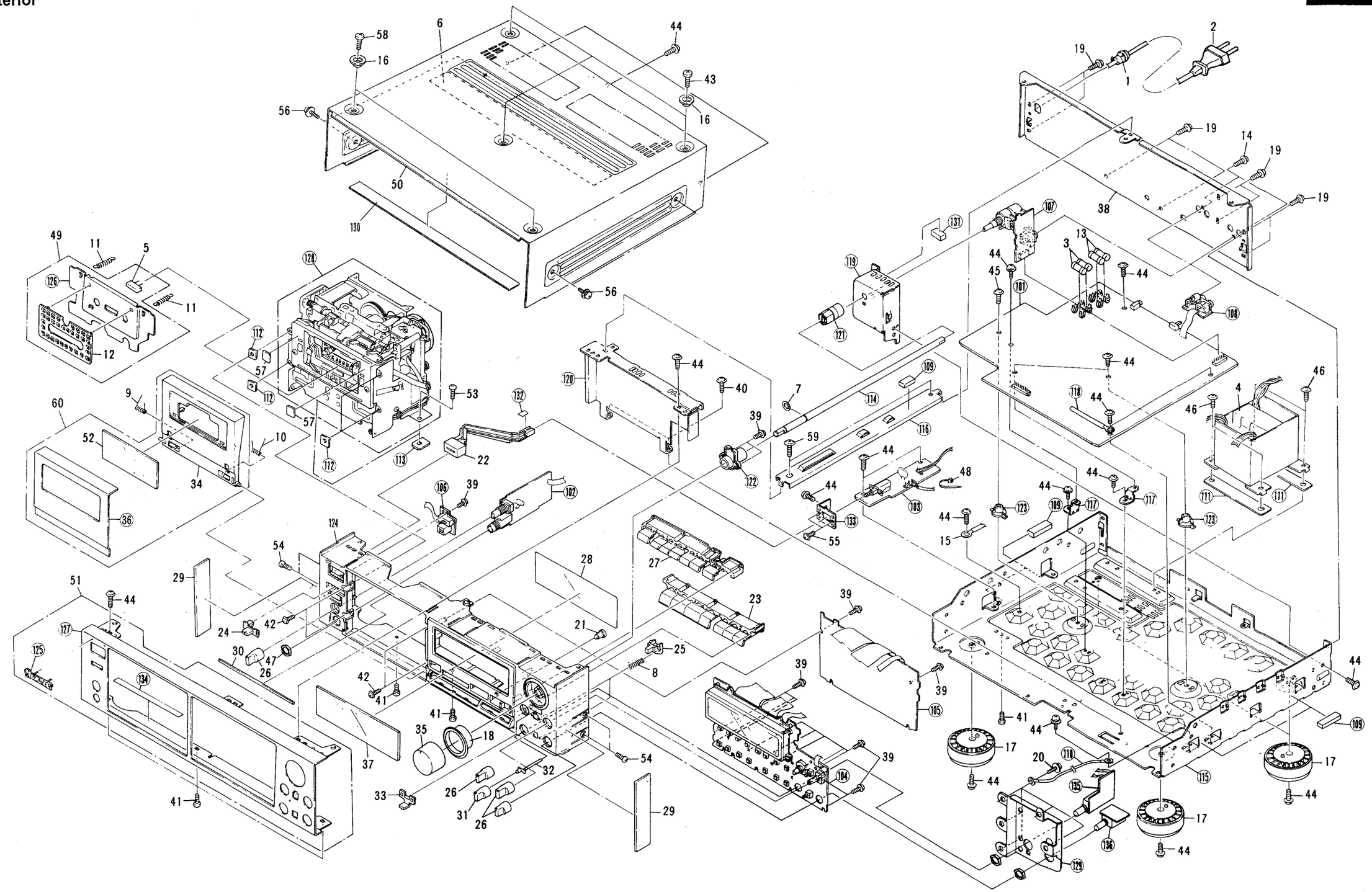
58
16
6
44
43
16
56
50
130
56
2
19
1
19
14
19
19
38
131
107
13
3
44
45
101
44
108
119
121
44
44
118
44
46
4
46
111
111
109
7
114
116
40
39
59
44
48
103
122
44
133
55
44
44
117
117
123
123
109
44
15
49
11
5
126
11
12
128
112
57
112
57
112
53
132
113
22
60
9
52
10
34
36
106
39
102
124
54
29
28
27
23
51
44
127
125
24
42
30
47
26
21
25
8
134
42
41
41
35
18
37
33
26
32
31
26
54
29
41
39
39
39
105
104
39
41
44
17
20
110
135
136
129
17
44
17
44
115
109
44
A
B
C
D
1
2
3
4
5
6

1.2 PARTS LIST OF MECHANISM SECTION

Mark	No.	Description	Part No.
	1	Rotary encoder	RSX1004
	2	Capstan motor assembly	RXM1016
	3	Reel motor assembly	RXM1018
	4	Step screw	RBA1074
	5	Thrust spring	RBL – 044
	6	Insulator	REB1099
	7	Pinch spring	RBL – 028
	8	Pinch thrust spring	RBL – 030
	9	Sub – pinch spring	RBL – 098
	10	Capstan belt	REB – 501
	11	Capstan belt (A)	REB – 509
	12	Tape guide	RNL – 016
	13	Flywheel assembly	RXA1374
	14	Sub – flywheel assembly	RXA1375
	15	Metal holder assembly(A)	RXA1342
	16	Metal holder assembly(B)	RXA1343
	17	Pinch roller arm (R) assembly	RXB – 876
	18	Pinch roller arm (A) assembly	RXB – 877
	19	BT spring (C)	RBH1213
	20	BT spring (B)	RBL – 032
	21	Idler pressure spring	RBL – 033
	22	Reel shaft cap (B)	RNK – 815
	23	BT disk assembly	RXB – 751
	24	Reel base assembly	RXB – 874
	25	Take – up idler assembly	RXB – 875
	26	Washer	RBF – 065
	27	Head base spring	RBL – 037
	28	Brake spring	RBL – 038
	29	Drive belt	REB1169
	30	Brake shoe	REB – 511
	31	Brake	RNL – 723
	32	Cam gear	RNK1640
	33	Side cam gear assembly	RXA1349
	34	Pocket spring (A)	RBL – 027
	35	Eject spring	RBL – 039
	36	Half set arm spring	RBL – 040
	37	REC functioning spring	RBL – 041
	38	Detection functioning spring	RBL – 042
	39	·····	
	40	O ring	REB – 447
	41	Cord clamper	RNH – 184
	42	Cassette plate	RNK1498
	43	REC detector arm	RNL – 733
	44	Chrom detector arm	RNL – 734
	45	Metal detector arm	RNL – 735
	46	Piston	RNL – 739
	47	Cylinder	RNL – 740
	48	·····	
	49	Collar	RNL – 742
	50	Pocket (L)	RNL – 849
	51	Pocket (R)	RNL – 850
	52	Washer	RBF – 057
	53	Screw	BBZ26P080FZK
	54	·····	
	55	Screw	BBZ30P080FZK

Mark	No.	Description	Part No.
	56	·····	
	57	Screw	BCZ30P060FMC
	58	Screw	BMZ26P030FZK
	59	Screw	BMZ26P040FMC
	60	Screw	BMZ26P060FZK
	61	Screw	BMZ30P080FZK
	62	Screw	JGZ20P025FMC
	63	Screw	PMA26P050FZK
	64	Screw	PMA26P060FZK
	65	Screw	PMZ20P080FZK
	66	Washer	RBF – 030
	67	Thrust washer (A)	RBF – 069
	68	Thrust washer (B)	RBF – 070
	69	Washer	RBF – 076
	70	Washer	RBF1040
	71	Binder	REC – 371
	72	Steel ball (3mm)	REF – 022
	73	Steel ball (4mm)	REF – 023
	74	Screw	VCT30P060FZK
	75	Screw	VCZ26P080FMC
	76	Washer	WA21D040D013
	77	Washer	WA26N070W040
	78	Washer	WA32D080D050
	79	E ring	YE20FUC
	80	E ring	YE25FUC
	81	E ring	YE30FUC
	82	Snapring	YS24FBT
	83	Power motor assembly	RXX1055
	84	Head base assembly	RXX1342
	85	Mechanism chassis assembly	RXA1366
	86	Brake lever	RNK1638
	87	Second pulley assembly	RXA1350
	88	Gear base assembly	RXA1351
	89	Pinch lever assembly	RXA1360
	90	Pocket felt	RED1028
	101	E head	
	102	R & P head	
	103	Connector unit	PWM1223
	104	Power motor	
	105	Insulator spring	RBH1226
	106	Reel motor mounting plate	RNE1169
	107	Flywheel holder	RNH – 304
	108	Motor bracket	RNK1497
	109	Thrust holder	RNL – 743
	110	Motor pulley	
	111	Pressure arm (R)	RNL – 725
	112	Pressure arm (L)	RNL – 726
	113	Adjustment nut	
	114	Head base set spring	RBL – 026
	115	Head adjustment spring (C)	
	116	Hight spring	
	117	Head base	
	118	Sub – head base	
	119	E head base	
	120	·····	

Mark	No.	Description	Part No.
	121	First pulley	
	122	Gear chassis assembly	RXA1171
	123	Pinch base assembly	RXB – 878
	124	·····	
	125	·····	
	126	·····	
	127	Cassette plate spring	RBH1227
	128	Position spring	RBL – 045
	129	Plate rubber (A)	REB1100
	130	Plate rubber (B)	REB1101
	131	Door arm	RNE1324
	132	Pocket frame	RNE1327
	133	Eject lever	RNL – 738
	134	Shift shaft assembly	RXB – 885
	135	Door frame (R) assembly	
	136	Door frame (L) assembly	RXA1285
	137	Earth lead assembly	
	138	REC switch unit	
	139	Tape selector unit	
	140	Sensor unit (A)	
	141	Sensor unit (B)	
	142	Door switch unit	
	143	Acetate Tape	REH1003
	144	2.5mm pitch side post (5P)	BS5P – SHF

Mechanism Unit

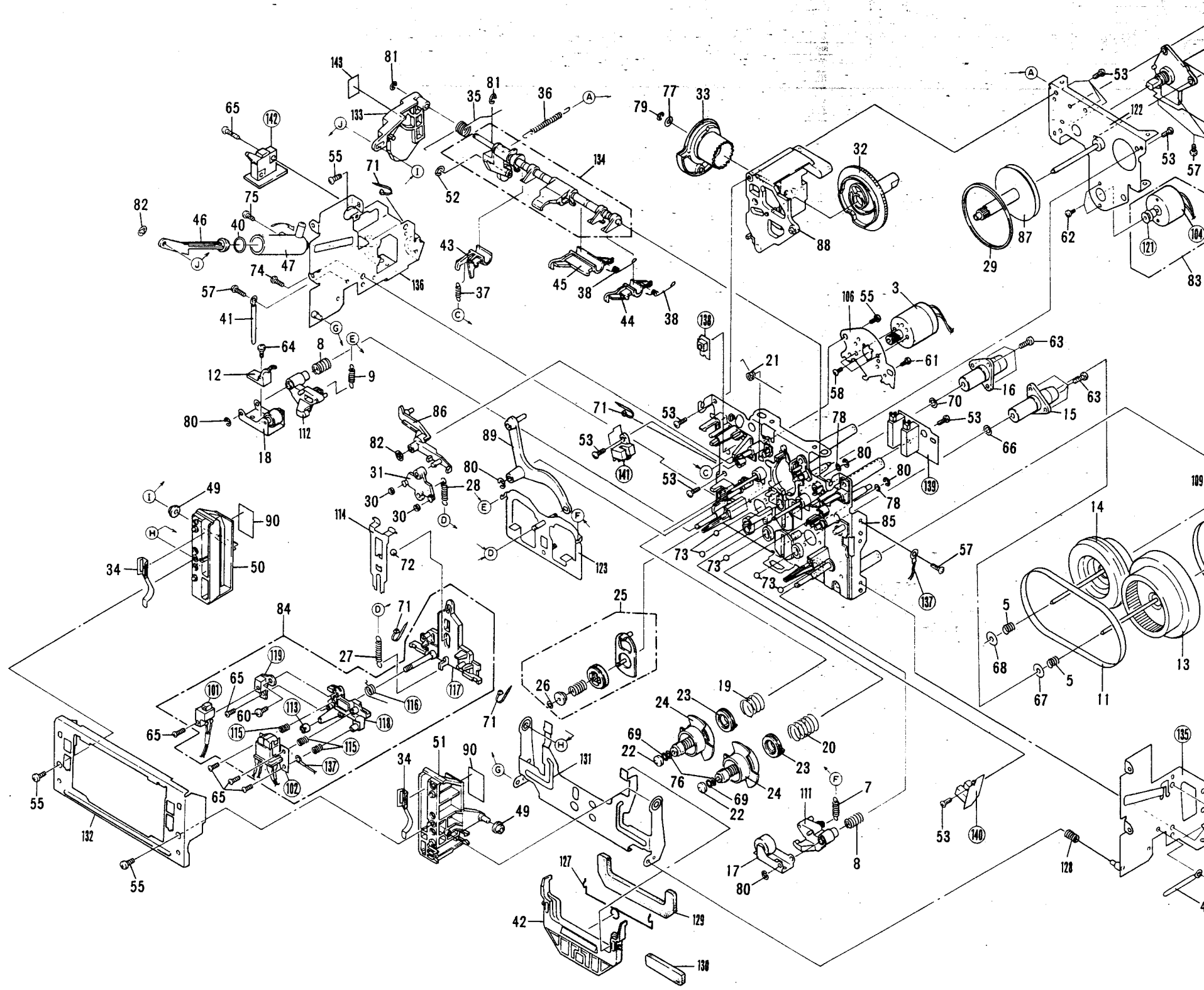

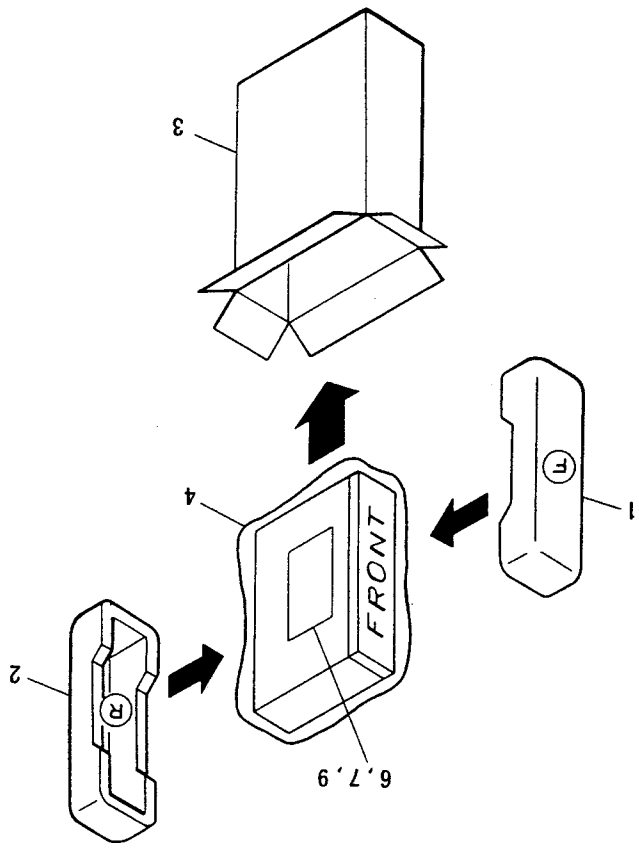

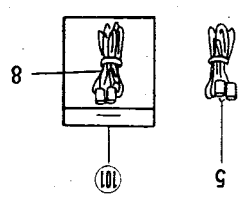

2. PACKING

Parts List

Mark	No.	Description	Part No.
	1	Pad (F)	RHA1021
	2	Pad (R)	RHA1022
	3	Packing case	RHG1276
	4	Sheet	RHX – 034
	5	Control cord	RDE1030
	6	Operating instructions (For HEM type)	RRE1044
	7	Operating instructions (For HEM type)	RRD1109
	8	Connection cord (For HB type)	RDE – 010
	9	Operating instructions	RRB1094
	101	Connection cord assembly	

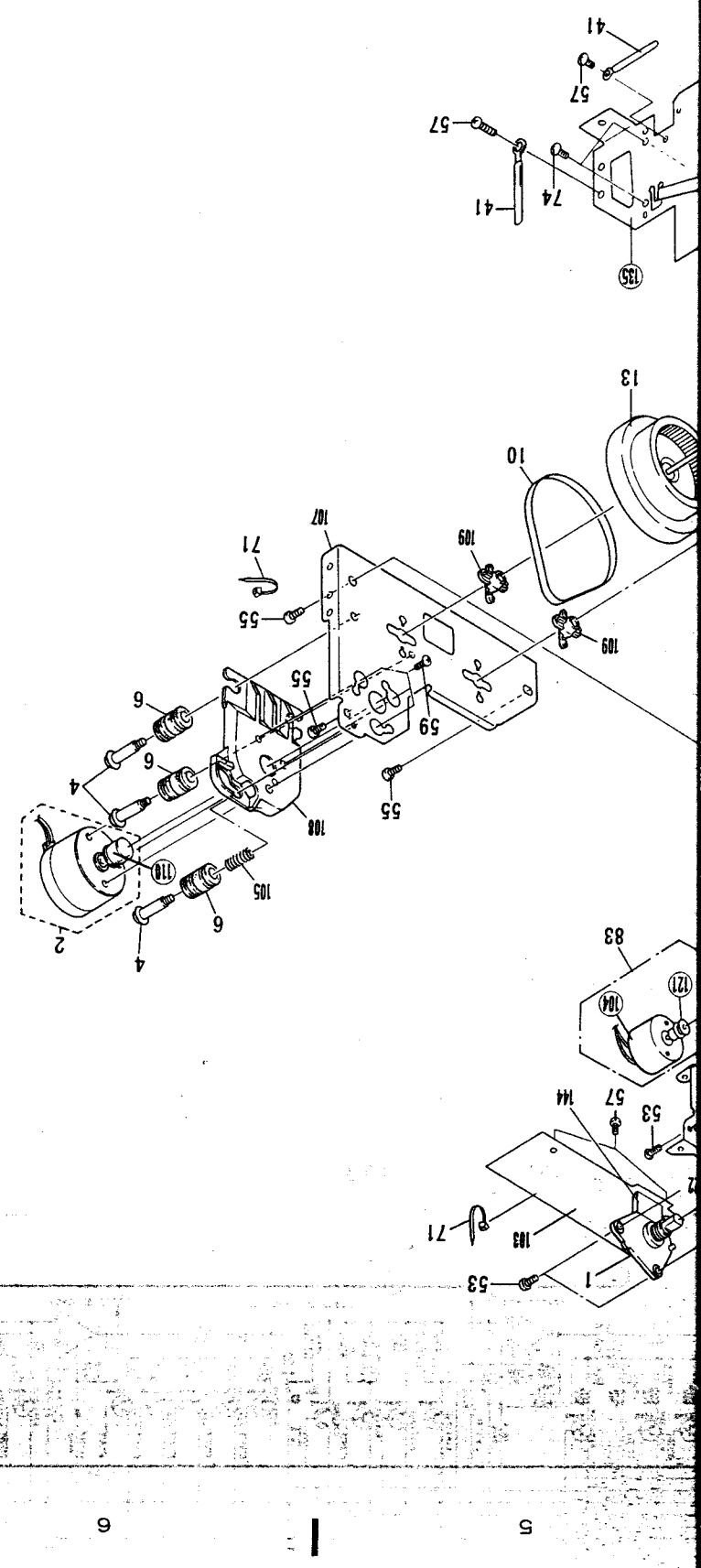

CT-979

1. RESISTORS :
   Indicated in Ω, 1/4W, 1/6W, ±5% tolerance unless otherwise noted k; kΩ, M; MΩ, (F); ±1%, (G); ±2%, (K); ±10%, (M); ±20% tolerance.

2. CAPACITORS :
   Indicated in capacity (μF)/voltage (V) unless otherwise noted p; pF. Indication without voltage is 50V except electrolytic capacitor.

3. VOLTAGE CURRENT :
   ; DC voltage (V) at no input signal.
   ← mA ; DC current at no input signal.

4. OTHERS :
   → ; Signal route.
   ⊘ ; Adjusting point.
   The ⚠ mark found on some component parts indicates the importance of the safety factor of the part. Therefore, when replacing, be sure to use parts of identical designation.
   ※ marked capacitors and resistors have parts numbers.

   This is the basic schematic diagram, but the actual circuit may vary due to improvements in design.

5. SWITCHES (Underline indicates switch position)
   OPERATION UNIT
   S921 : OPEN/CLOSE
   S922 : REW
   S923 : TAPE RETURN
   S924 : STOP
   S925 : COUNTER
   S926 : RESET
   S927 : PLAY
   S928 : METER RANGE
   S929 : FF
   S930 : PEAK MODE
   S931 : REC
   S932 : DISPLAY
   S933 : MONITOR SELECT
   S934 : PAUSE
   S935 : SYNCHRO
   S936 : REC/MUTE
   S951 : DOLBY NR B – OFF – C
   S961 : SUPER AUTO BLE

   POWER SW UNIT
   S991 : ON – OFF

3. SCHEMATIC DIAGRAM

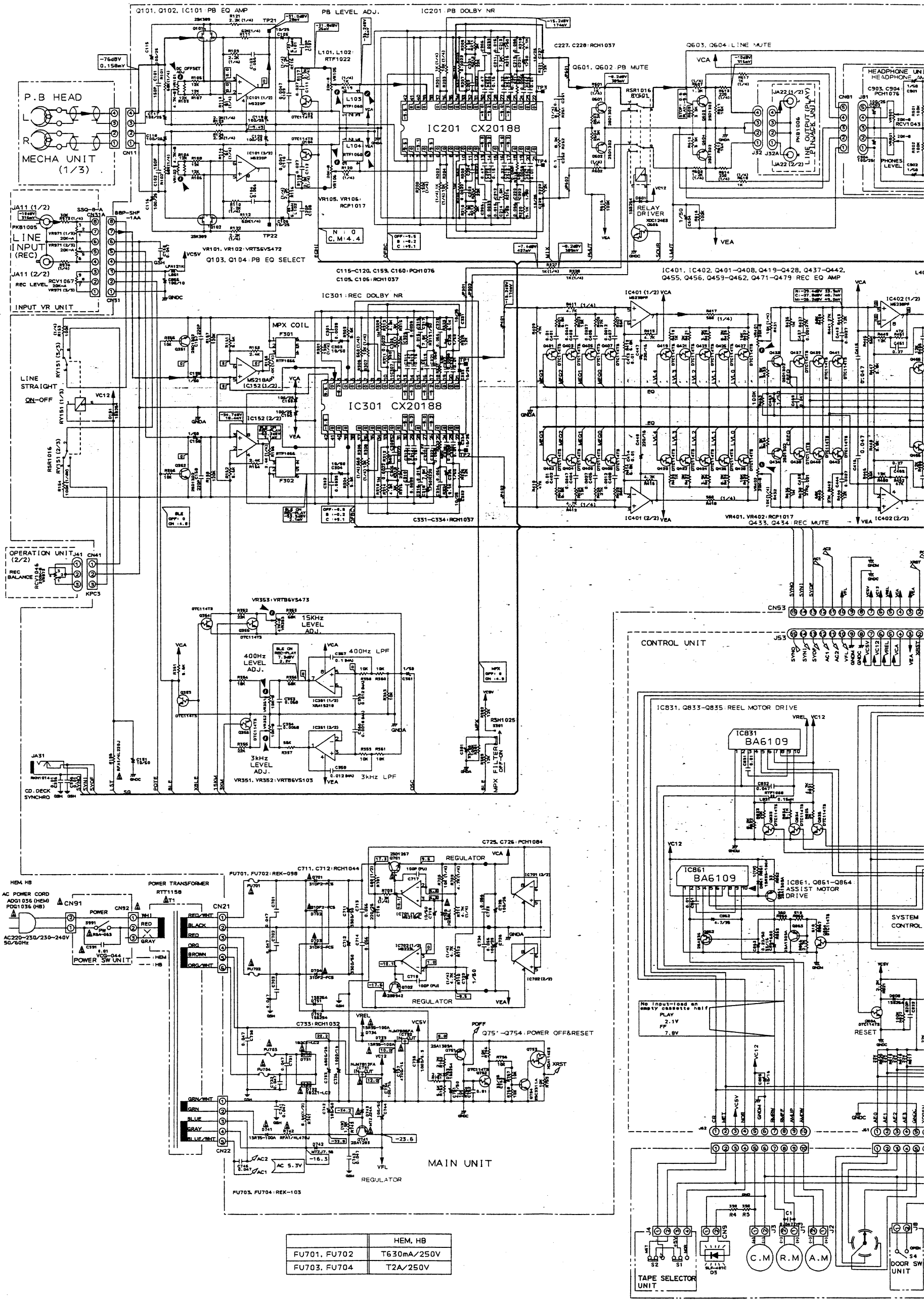

	HEM, HB
FU701, FU702	T630mA/250V
FU703, FU704	T2A/250V

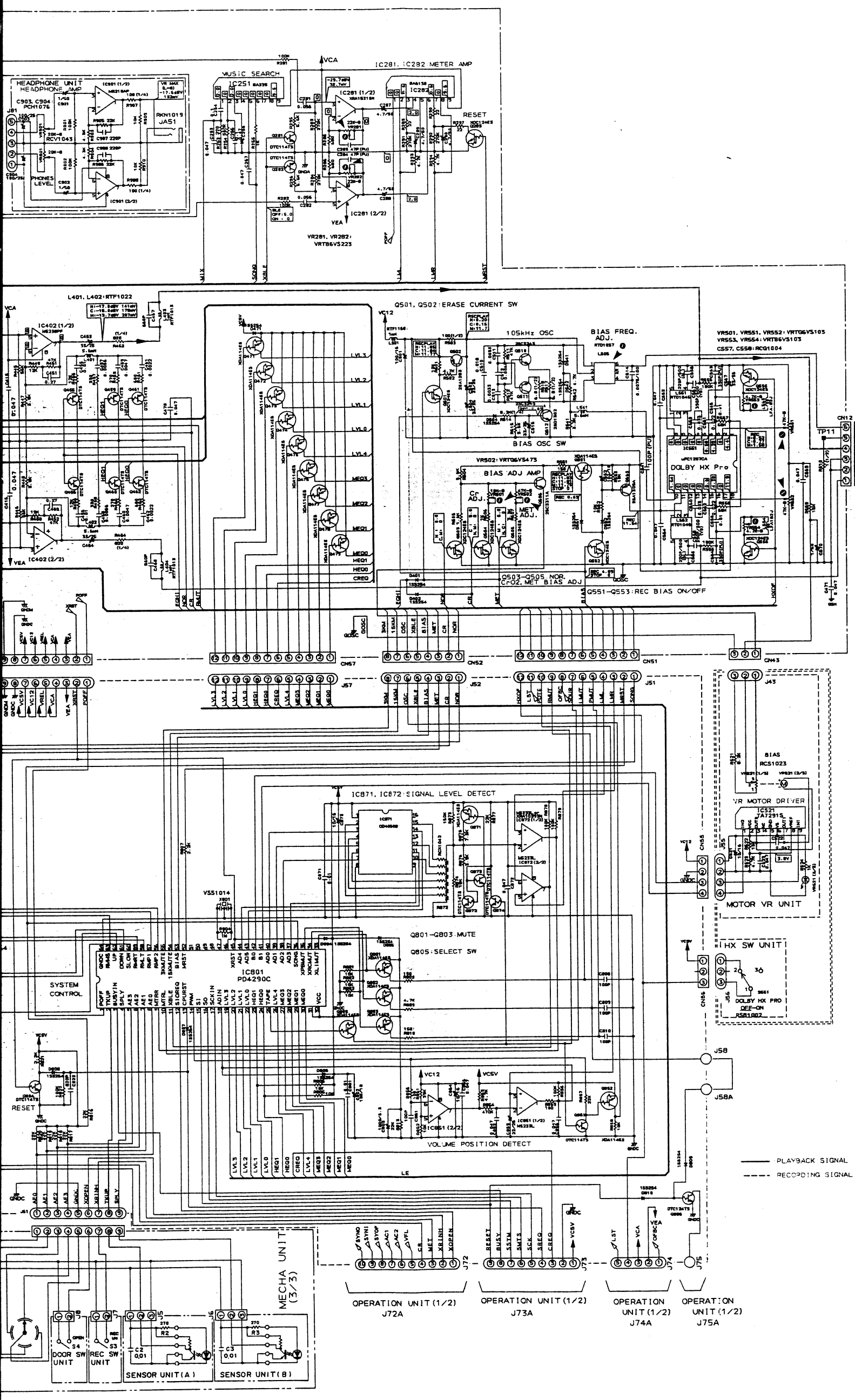
HEADPHONE UNIT
HEADPHONE AMP
PHONES LEVEL
MUSIC SEARCH
IC281, IC282 METER AMP
RESET
VR281, VR282: VRTB6VS223
L401, L402: RTF1022
IC402 (1/2)
IC402 (2/2)
Q501, Q502: ERASE CURRENT SW
105kHz OSC
BIAS FREQ. ADJ.
BIAS OSC SW
BIAS ADJ AMP
DOLBY HX Pro
VR501, VR551, VR552: VRTG6VS103
VR553, VR554: VRTB6VS103
C557, C558: RCG1004
VR502: VRTG6VS473
Q503-Q505 NOR, CrO2, MET BIAS ADJ
Q551-Q553: REC BIAS ON/OFF
ERASE HEAD
L REC HEAD R
MECHA UNIT (2/3)
IC871, IC872 SIGNAL LEVEL DETECT
IC801 PD4290C
SYSTEM CONTROL
Q801-Q803 MUTE
Q805 SELECT SW
VOLUME POSITION DETECT
BIAS RCS1023
VR MOTOR DRIVER
IC521 TA7291S
MOTOR VR UNIT
HX SW UNIT
DOLBY HX PRO DEE-ON
PLAYBACK SIGNAL
RECORDING SIGNAL
OPERATION UNIT (1/2) J72A
OPERATION UNIT (1/2) J73A
OPERATION UNIT (1/2) J74A
OPERATION UNIT (1/2) J75A
MECHA UNIT (3/3)
DOOR SW UNIT
REC SW UNIT
SENSOR UNIT (A)
SENSOR UNIT (B)

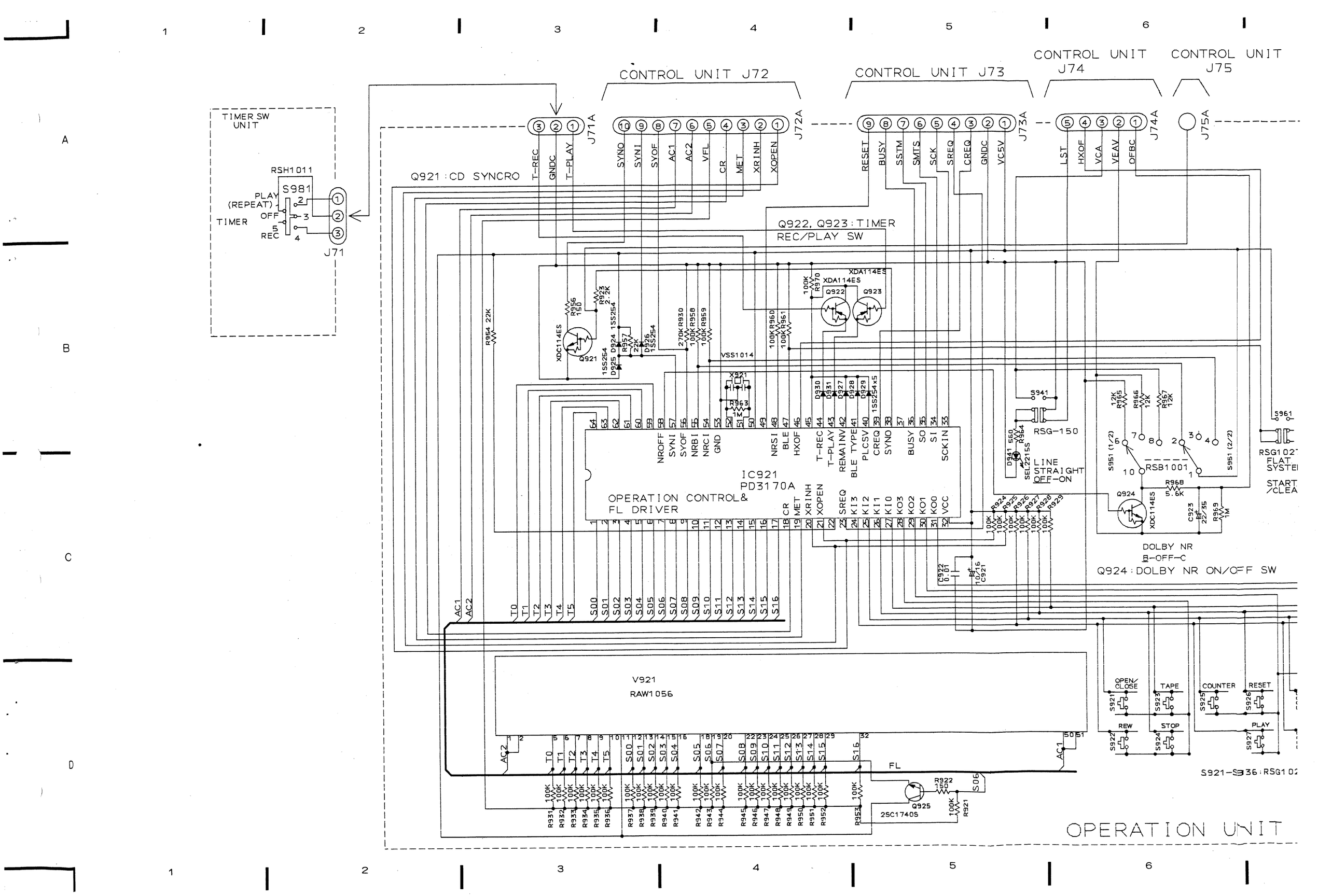
CONTROL UNIT J72
CONTROL UNIT J73
CONTROL UNIT J74
CONTROL UNIT J75
TIMER SW UNIT
RSH1011
S981
PLAY (REPEAT)
OFF
REC
TIMER
J71
J71A
J72A
J73A
J74A
J75A
Q921 : CD SYNCRO
Q922, Q923 : TIMER REC/PLAY SW
XDA114ES
Q922
Q923
XDC114ES
Q921
VSS1014
X921
IC921
PD3170A
OPERATION CONTROL& FL DRIVER
S941
RSG-150
LINE STRAIGHT OFF-ON
SEL2215S
S951 (1/2)
S951 (2/2)
RSB1001
Q924
XDC114ES
DOLBY NR B-OFF-C
Q924 : DOLBY NR ON/OFF SW
S961
RSG102
FLAT SYSTEM
START /CLEA
V921
RAW1056
OPEN/ CLOSE
TAPE
COUNTER
RESET
REW
STOP
PLAY
S921-S936 : RSG102
FL
Q925
2SC1740S
OPERATION UNIT

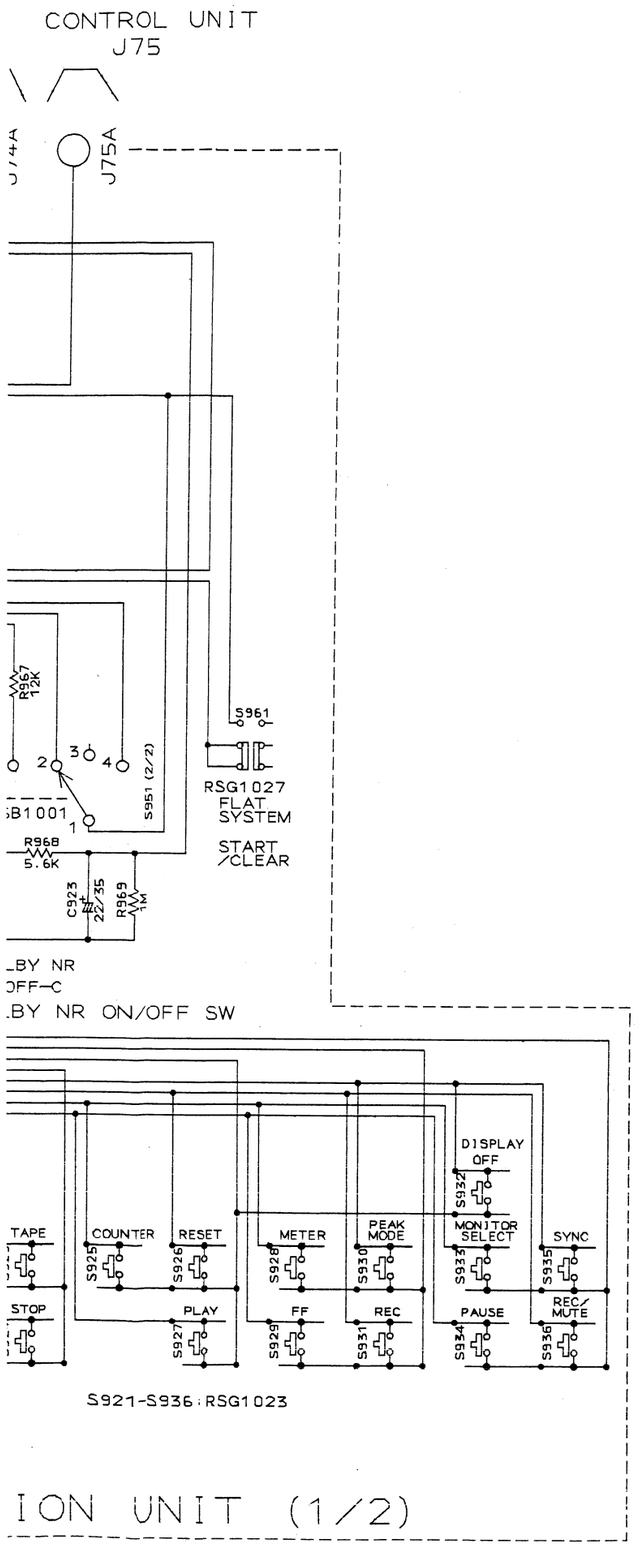
CONTROL UNIT
J75
J74A
J75A
R967
12K
S961
RSG1027
FLAT
SYSTEM
S951 (2/2)
SB1001
START
/CLEAR
R968
5.6K
C923
22/35
R969
1M
BY NR
OFF—C
BY NR ON/OFF SW
DISPLAY
OFF
S932
TAPE
COUNTER
RESET
METER
PEAK
MODE
MONITOR
SELECT
SYNC
S925
S926
S928
S930
S933
S935
STOP
PLAY
FF
REC
PAUSE
REC/
MUTE
S927
S929
S931
S934
S936
S921-S936:RSG1023
ION UNIT (1/2)

4. P.C. BOARDS CONNECTION DIAGRAM

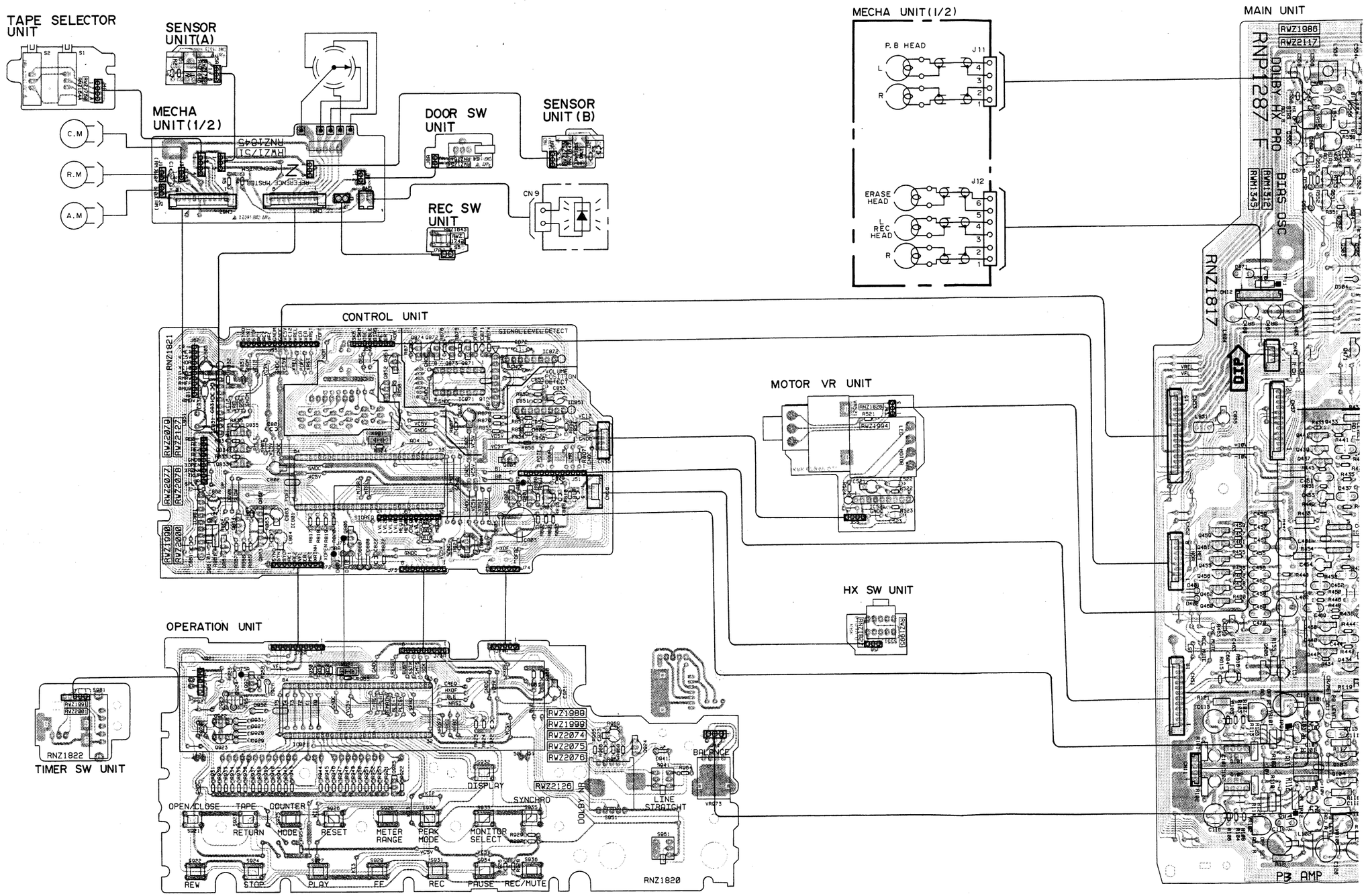

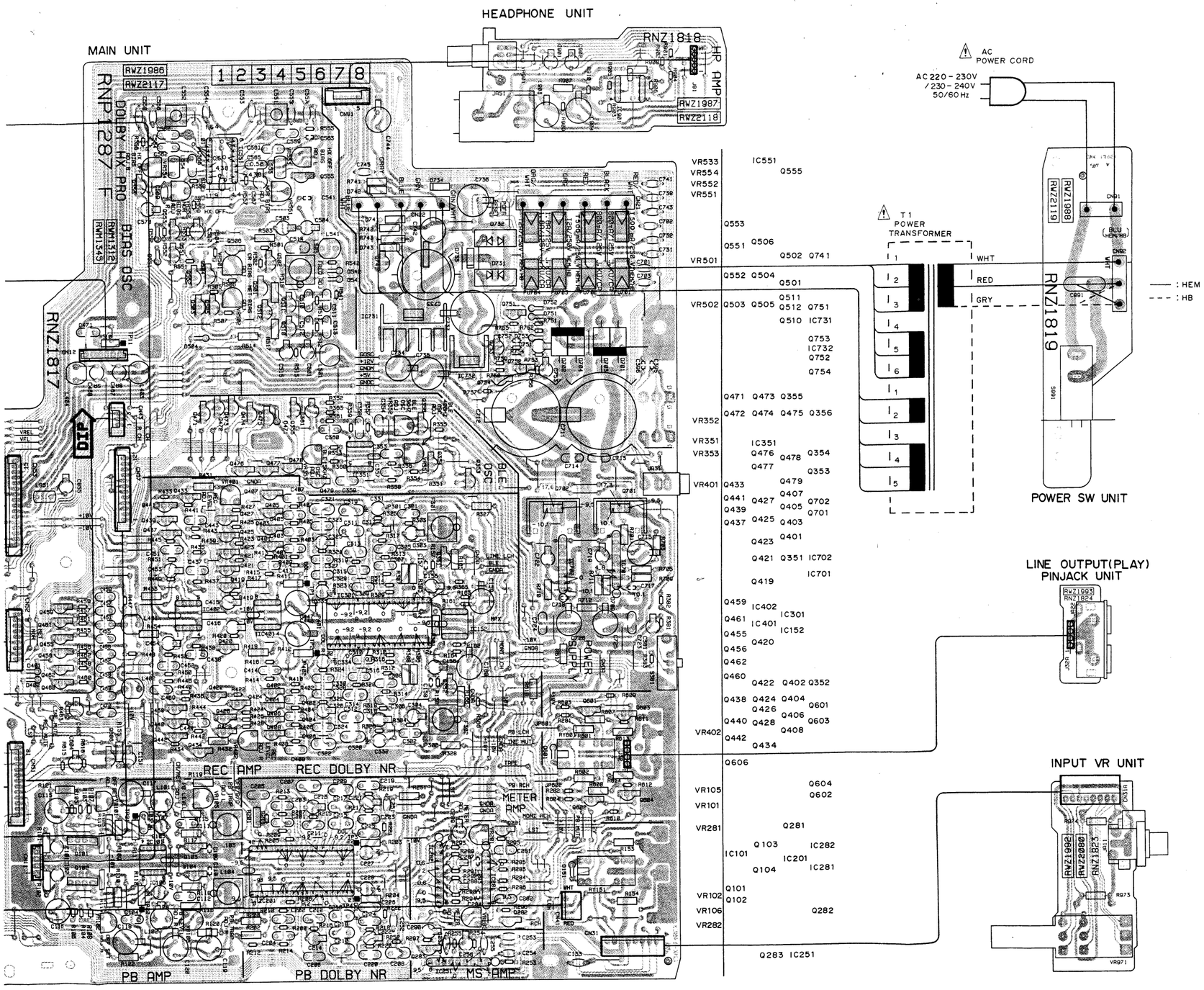

P.C.B. pattern diagram indication	Corresponding part symbol	Part name
		Transistor
		FET
		Diode
		Zenner diode
		LED
		Varactor
		Tact switch
		Inductor
		Coil
		Transformer
		Filter
		Ceramic capacitor
		Mylar capacitor
		Styrol capacitor
		Electrolytic capacitor (Non polarized)
		Electrolytic capacitor (Noiseless)
		Electrolytic capacitor (Polarized)
		Electrolytic capacitor (Polarized)
		Power capacitor
		Semi-fixed resistor
		Resistor array
		Resistor
		Resonator
		Thermistor

1. This P.C.B. connection diagram is viewed from the parts mounted side.
2. The parts which have been mounted on the board can be replaced with those shown with the corresponding wiring symbols listed in the above Table.
3. The capacitor terminal marked with ▭ shows negative terminal.
4. The diode marked with O shows cathode side.
5. The transistor terminal marked with ▭ shows emitter.

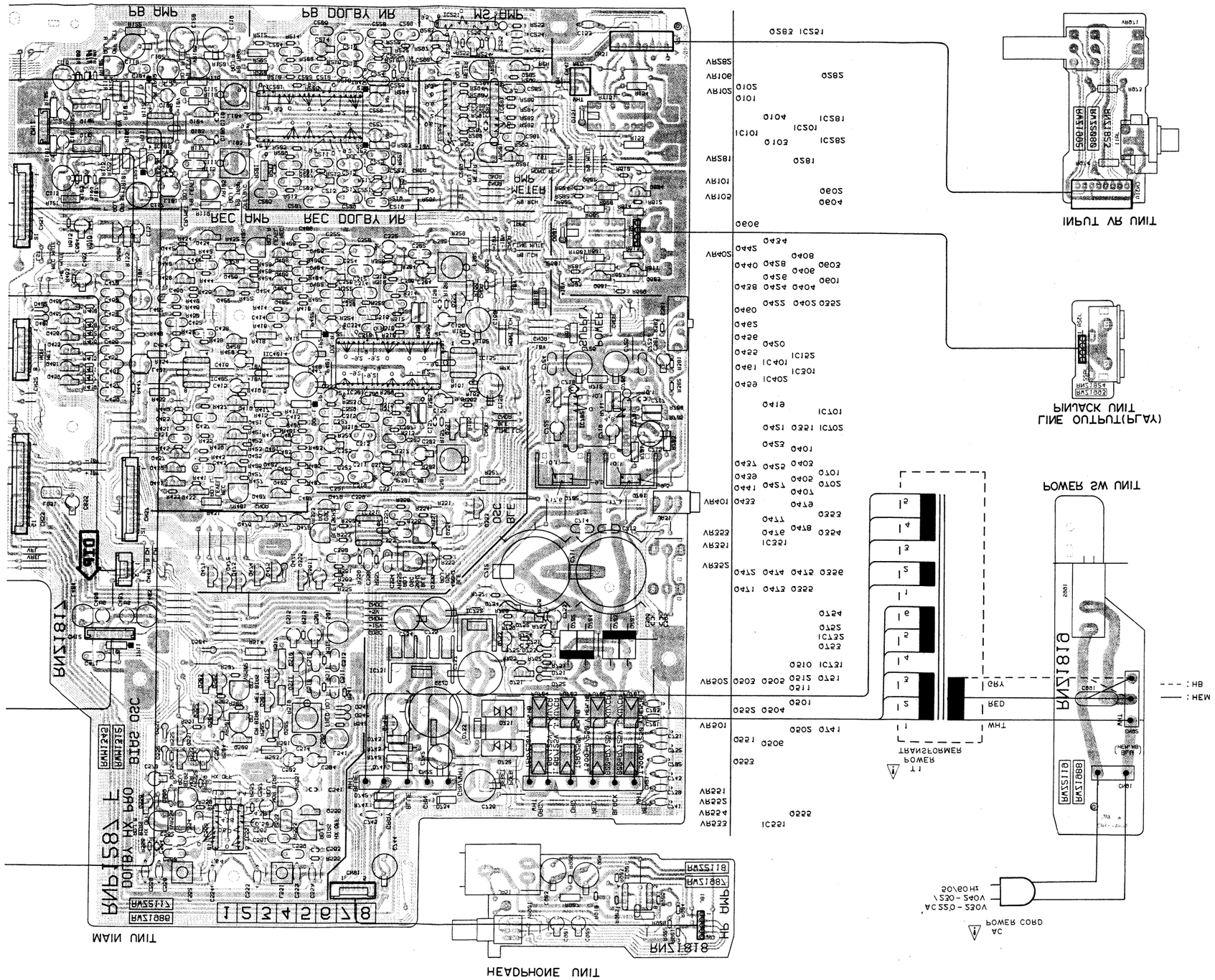
MAIN UNIT
HEADPHONE UNIT
TUNE RV UNIT
LINE OUTPUT(PLAY)
PHONES TUNE
POWER SW UNIT
POWER CORD
TRANSFORMER
POWER
DOLBY NR PRO
BIAS OSC
RAM/ROM
POWER
REC DOLBY NR
REC AMP
PB DOLBY NR
PB AMP
SM AMP
METER AMP
BTL
OSC
BFE
RN1818
RN2158
RN2159
RN2160
RN2161
RN2162
RN2163
RN2164
RN2165
RN2166
RN2167
RN2168
RN2169
RN2170
RN2171
RN2172
RN2173
RN2174
RN2175
RN2176
RN2177
RN2178
RN2179
RN2180
RN2181
RN2182
RN2183
RN2184
RN2185
RN2186
RN2187
RN2188
RN2189
RN2190
RN2191
RN2192
RN2193
RN2194
RN2195
RN2196
RN2197

4. P.C. BOARDS CONNECTION DIAGRAM

• View from soldering side

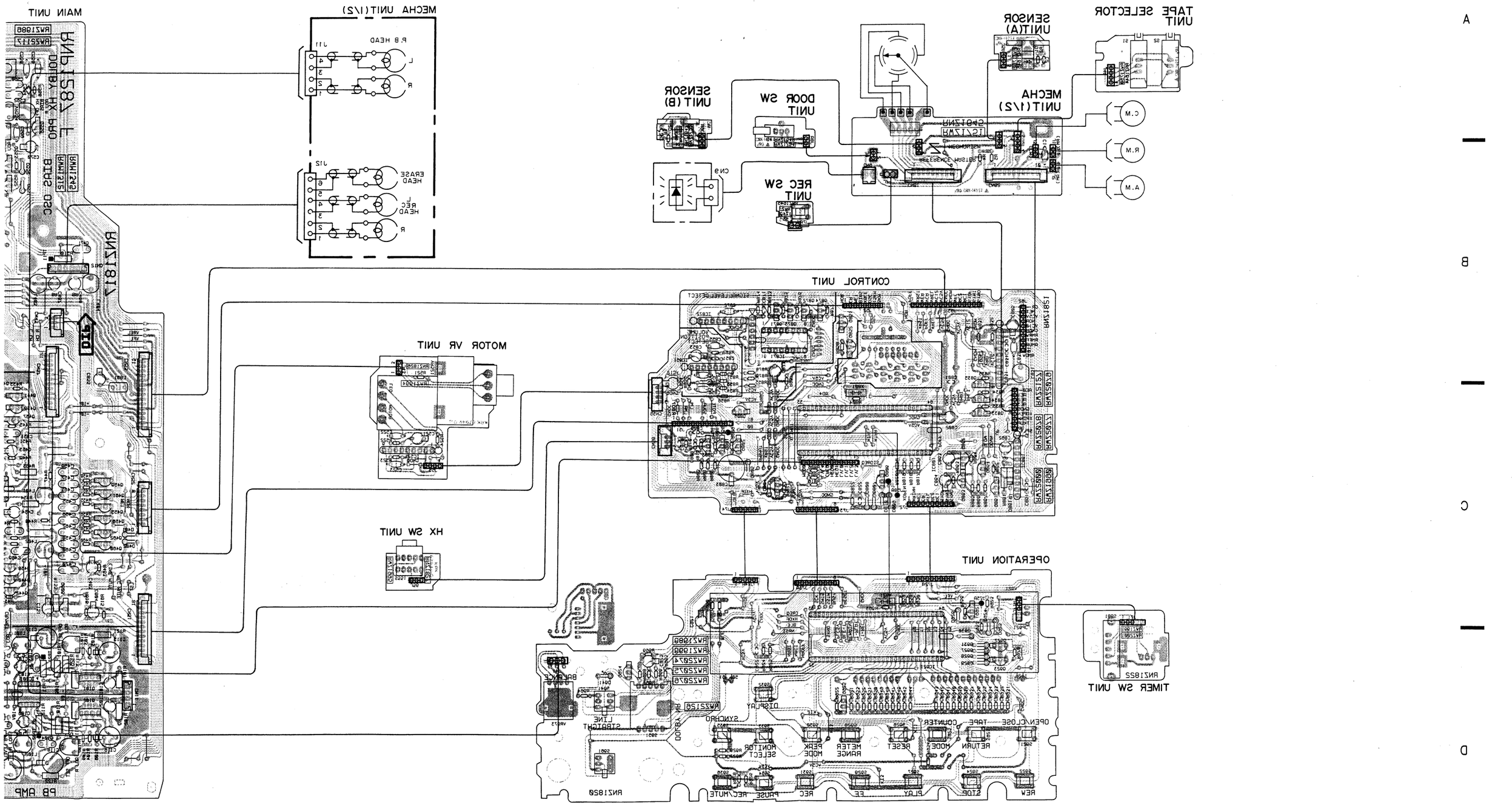

5. P.C.B's PARTS LIST

NOTES:

- Parts without part number cannot be supplied.
- Parts marked by "⊙" are not always kept in stock. Their delivery time may be longer than usual or they may be unavailable.
- The ⚠ mark found on some component parts indicates the importance of the safety factor of the part. Therefore, when replacing, be sure to use parts of identical designation.
- When ordering resistors, first convert resistance values into code form as shown in the following examples.

Ex.1 When there are 2 effective digits (any digit apart from 0), such as 560 ohm and 47k ohm (tolerance is shown by J=5%, and K=10%)

560Ω → 56 × 10¹ → 561 ····· RD1/4PS 5 6 1 J
47kΩ → 47 × 10³ → 473 ····· RD1/4PS 4 7 3 J
0.5Ω → 0R5 ····· RN2H 0 R 5 K
1Ω → 010 ····· RS1P 0 1 0 K

Ex.2 When there are 3 effective digits (such as in high precision metal film resistors).

5.62kΩ → 562 × 10¹ → 5621 ····· RN1/4SR 5 6 2 1 F

Mark	No.	Description	Part No.
		INPUT VR UNIT	
		RESISTORS	
	R973, 974	CARBONFILM RESISTOR	RDR1/4PM□□□J
	VR971		RCV1067
		OTHERS	
	CN31	SSQ CONNECTOR 8P	SSQ-8-A
	JA11	JACK	PKB1005
		PINJACK UNIT	
		OTHERS	
	JA22	JACK	PKB1006
		MOTOR VR UNIT	
		SEMICONDUCTORS	
	IC521	MECHANISM DRIVER IC	TA7291S
		CAPACITORS	
	C521	ELECTR. CAPACITOR	CEAS100M16
	C522, 523	CERAMIC CAPACITOR	CKCYF473Z50
		RESISTORS	
	R521-524	CARBONFILM RESISTOR	RD1/6PM□□□J
	VR521	(5K)	RCS1023
		HX SW UNIT	
		SWITCHES	
	S551		RSB1002
		TIMER SW UNIT	
		SWITCHES	
	S981		RSH1011
		OPERATION UNIT	
		SEMICONDUCTORS	
	IC921		PD3170A
	Q921	DIGITAL TRANSISTOR	XDC114ES
	Q922, 923	DIGITAL TRANSISTOR	XDA114ES
	Q924	DIGITAL TRANSISTOR	XDC114ES
	Q925	TRANSISTOR	2SC1740S
	D924-931	DIODE	1SS254
	D941	LED	SEL2215S
		SWITCHES	
	S921-936	SWITCH	RSG1023
	S941	SWITCH	RSG-150
	S951		RSB1001
	S961	SWITCH	RSG1027
		CAPACITORS	
	C921	ELECTR. CAPACITOR	CEAS100M16
	C922	CERAMIC CAPACITOR	CKPUYY103N16
	C923	ELECTR. CAPACITOR	CEAS220M35
		RESISTORS	
	R921-954	CARBONFILM RESISTOR	RD1/6PM□□□J
	R956-961	CARBONFILM RESISTOR	RD1/6PM□□□J
	R963-970	CARBONFILM RESISTOR	RD1/6PM□□□J
	VR973	VARIABLE RESISTOR(200K)	RCV1046
		OTHERS	
	V921		RAW1056
	X921	CERAMIC RESONATOR	VSS1014
		CONTROL UNIT	
		SEMICONDUCTORS	
	IC801	MAIN CPU	PD4290C
	IC831	IC	BA6109
	IC851	DUAL-COMPARATOR IC	M5233L
	IC861	IC	BA6109
	IC871	LOGIC IC	CD4050B
	IC872	DUAL-COMPARATOR IC	M5233L
	Q801-803	DIGITAL TRANSISTOR	XDA114ES
	Q804	DIGITAL TRANSISTOR	DTC114TS
	Q805	DIGITAL TRANSISTOR	XDA114ES
	Q806	TRANSISTOR	DTC124TS
	Q833-835	DIGITAL TRANSISTOR	DTC114TS
	Q851	DIGITAL TRANSISTOR	DTC114TS
	Q852	DIGITAL TRANSISTOR	XDA114ES
	Q861	TRANSISTOR	2SA1309A

Mark	No.	Description	Part No.
	Q862	TRANSISTOR	2SA936
	Q863	TRANSISTOR	2SA1309A
	Q864	DIGITAL TRANSISTOR	DTC114TS
	Q871	DIGITAL TRANSISTOR	XDA114ES
	Q872-874	DIGITAL TRANSISTOR	DTC114TS
	D804-810	DIODE	1SS254
⚠	D861	RECTIFIER DIODE	1SR35-100A
		COILS/TRANSFORMERS	
	L831		RTF1068
		CAPACITORS	
	C801	CERAMIC CAPACITOR	CKPUYY103N16
	C802	ELECTR. CAPACITOR	CEAS101M10
	C803	ELECTR. CAPACITOR	CEAS102M6R3
	C805	ELECTR. CAPACITOR	CEAS100M16
	C808-810	AXIAL CAPACITOR	CKPUYB101K50
	C822	AXIAL CAPACITOR	CKPUYB821K50
	C831	CERAMIC CAPACITOR	CKPUYY103N16
	C832	CERAMIC CAPACITOR	CKCYF473Z50
	C851	AXIAL CAPACITOR	CKPUYB101K50
	C852	CERAMIC CAPACITOR	CGCYX473K25
	C853	ELECTR. CAPACITOR	CEAS220M25
	C854	ELECTR. CAPACITOR	CEAS100M16
	C855	CERAMIC CAPACITOR	CKCYF473Z50
	C856	CERAMIC CAPACITOR	CGCYX473K25
	C861	CERAMIC CAPACITOR	CKPUYY103N16
	C862	ELECTR. CAPACITOR	CEANP4R7M35
	C863	ELECTR. CAPACITOR	CEASR22M50
	C864	ELECTR. CAPACITOR	CEAS330M16
	C871	CERAMIC CAPACITOR	CKPUYY103N16
	C872	CERAMIC CAPACITOR	CKCYF473Z50
	C873	ELECTR. CAPACITOR	CEAS100M16
		RESISTORS	
	R801-810	CARBONFILM RESISTOR	RD1/6PM□□□J
	R813	CARBONFILM RESISTOR	RD1/6PM□□□J
	R816-822	CARBONFILM RESISTOR	RD1/6PM□□□J
	R831-835	CARBONFILM RESISTOR	RD1/6PM□□□J
	R851-859	CARBONFILM RESISTOR	RD1/6PM□□□J
	R861	METAL OXIDE RESISTOR	RS1LMF□□□J
	R862-867	CARBONFILM RESISTOR	RD1/6PM□□□J
	R872	(10K)	RCX1042
	R873-876	METALFILM RESISTOR	RN1/6PQ□□□□F
	R877-879	CARBONFILM RESISTOR	RD1/6PM□□□J
		OTHERS	
	X801	CERAMIC RESONATOR	VSS1014
		MAIN UNIT	
		SEMICONDUCTORS	
	IC101	OP-AMP-IC	M5220P
	IC152	OP-AMP, IC	M5218AP
	IC201	DOLBY-B, C IC	CX20188
	IC251	IC	BA335
	IC281	OP-AMP IC	XRA15218N

Mark	No.	Description	Part No.
	IC282		BA6138
	IC301	DOLBY-B, C IC	CX20188
	IC351	OP-AMP IC	XRA15218
	IC401, 402	OP AMP	M5238PF
	IC551	DOLBY HX PRO IC	UPC1297CA
	IC701	OP-AMP, IC	M5218AL
	IC702	OP-AMP IC	M5223L
⚠	IC731	REGULATOR IC	NJM7812FA
⚠	IC732	REGULATOR IC	NJM7805FA
	Q101, 102	N-DUAL-FET	2SK389
	Q103, 104	DIGITAL TRANSISTOR	DTC114TS
	Q281, 282	DIGITAL TRANSISTOR	DTC114TS
	Q283	TRANSISTOR	XDC124ES
	Q351, 352	TRANSISTOR	2SD1302
	Q353-356	DIGITAL TRANSISTOR	DTC114TS
	Q401-408	DIGITAL TRANSISTOR	DTC114TS
	Q419-428	DIGITAL TRANSISTOR	DTC114TS
	Q433, 434	TRANSISTOR	2SD1302
	Q437-442	DIGITAL TRANSISTOR	DTC114TS
	Q455, 456	DIGITAL TRANSISTOR	DTC114TS
	Q459-462	DIGITAL TRANSISTOR	DTC114TS
	Q471-479	DIGITAL TRANSISTOR	XDA114ES
	Q501	TRANSISTOR	XDC124ES
	Q502	TRANSISTOR	2SA1283
	Q503-505	TRANSISTOR	XDC124ES
	Q506	TRANSISTOR	2SC3311A
	Q510, 511	TRANSISTOR	2SC3243
	Q512	TRANSISTOR	2SD1302
	Q551	DIGITAL TRANSISTOR	XDA114ES
	Q552	TRANSISTOR	XDC124ES
	Q553	TRANSISTOR	2SA1309A
	Q555, 556	TRANSISTOR	XDC124ES
	Q601-604	TRANSISTOR	2SD1302
	Q606	TRANSISTOR	XDC124ES
⚠	Q701	TRANSISTOR	2SD1267
⚠	Q702	TRANSISTOR	2SB942
⚠	Q741	TRANSISTOR	2SA1283
	Q751	TRANSISTOR	2SA1309A
	Q752	DIGITAL TRANSISTOR	DTC114TS
	Q753	DIGITAL TRANSISTOR	XDA114ES
	Q754	TRANSISTOR	2SC3311A
	D151	DIODE	1SS254
	D401, 402	DIODE	1SS254
	D471	DIODE	1SS254
	D504	DIODE	1SS254
	D541, 542	DIODE	1SS254
	D551, 552	DIODE	1SS254
	D601	DIODE	1SS254
⚠	D701-704		31DF2-FC5
⚠	D709	ZENER DIODE	HZ5BLL
⚠	D731	POWER DIODE	1B2C1-LC2
⚠	D732	POWER DIODE	1B2Z1-LC2
⚠	D733, 734	RECRIFIER DIODE	1SR35-100A
⚠	D741	RECRIFIER DIODE	1SR35-100A
	D742	ZENER DIODE	MTZJ7.5B

Mark	No.	D
⚠	D743	ZENER DIOD
	D751-753	DIODE
		SWITCHES
	S381	
		RELAYS
	RY151	
	RY601	
		COILS/TRANSFORM
	L101, 102	COIL
	L103, 104	COIL
	L401, 402	COIL
	L403, 404	
	L501	
	L505	
	L541	COIL
	L551, 552	
	L553, 554	RADIAI
	L851	RADIAL IN
	F301, 302	FILTE
		CAPACITORS
	C101, 102	PL. ST
	C103, 104	AUDIO
	C105, 106	ELECT
	C107, 108	CERAM
	C109, 110	AUDIO
	C111, 112	AUDIO
	C115-120	(100/
	C151	ELECTR. CA
	C153	CERAMIC C
	C155, 156	ELECT
	C157, 158	AXIAL
	C159, 160	(100/
	C201-204	AUDIC
	C205, 206	AUDIC
	C207, 208	AUDIC
	C209, 210	AUDIC
	C211, 212	AUDIC
	C213, 214	ELECT
	C215, 216	AUDIC
	C217, 218	AUDIC
	C219, 220	AUDIC
	C221, 222	ELECT
	C223, 224	
	C225, 226	AUDIC
	C227, 228	(10/2
	C251, 252	AUDIC
	C253	AUDIO FI
	C254, 255	AUDIC
	C256	ELECTR. C
	C257	AUDIO FI
	C281, 282	AUDIC
	C283, 284	AXIAI
	C287-290	ELEC

Mark	No.	Description	Part No.
⚠	D743	ZENER DIODE	MTZJ24A
	D751-753	DIODE	1SS254
SWITCHES			
	S381		RSH1025
RELAYS			
	RY151		RSR1016
	RY601		RSR1016
COILS/TRANSFORMERS			
	L101, 102	COIL	RTF1022
	L103, 104	COIL	RTF1060
	L401, 402	COIL	RTF1022
	L403, 404		RTF1013
	L501		RTF1160
	L505		RTD1057
	L541	COIL	RTF1022
	L551, 552		RTD1045
	L553, 554	RADIAL INDUCTOR	LFA182J
	L851	RADIAL INDUCTOR	LFA121K
	F301, 302	FILTER	RTF1066
CAPACITORS			
	C101, 102	PL. STYRENE CAPACITOR	CQSF151J50
	C103, 104	AUDIO FILM CAPACITOR	CFTXA563J50
	C105, 106	ELECTR. CAPACITOR	RCH1037
	C107, 108	CERAMIC CAPACITOR	CKPUYB121K50
	C109, 110	AUDIO FILM CAPACITOR	CFTXA472J50
	C111, 112	AUDIO FILM CAPACITOR	CFTXA273J50
	C115-120	(100/25)	PCH1076
	C151	ELECTR. CAPACITOR	CEAS100M50
	C153	CERAMIC CAPACITOR	CKCYF473Z50
	C155, 156	ELECTR. CAPACITOR	CEYA010M50
	C157, 158	AXIAL CAPACITOR	CKPUYB221K50
	C159, 160	(100/25)	PCH1076
	C201-204	AUDIO FILM CAPACITOR	CFTXA222J50
	C205, 206	AUDIO FILM CAPACITOR	CFTXA392J50
	C207, 208	AUDIO FILM CAPACITOR	CFTXA474J50
	C209, 210	AUDIO FILM CAPACITOR	CFTXA154J50
	C211, 212	AUDIO FILM CAPACITOR	CFTXA153J50
	C213, 214	ELECTR. CAPACITOR	CEYA010M50
	C215, 216	AUDIO FILM CAPACITOR	CFTXA224J50
	C217, 218	AUDIO FILM CAPACITOR	CFTXA683J50
	C219, 220	AUDIO FILM CAPACITOR	CFTXA563J50
	C221, 222	ELECTR. CAPACITOR	CEYA010M50
	C223, 224		CFTXA562J50
	C225, 226	AUDIO FILM CAPACITOR	CFTXA103J50
	C227, 228	(10/25)	RCH1037
	C251, 252	AUDIO FILM CAPACITOR	CFTXA104J50
	C253	AUDIO FILM CAPACITOR	CFTXA473J50
	C254, 255	AUDIO FILM CAPACITOR	CFTXA104J50
	C256	ELECTR. CAPACITOR	CEASR47M50
	C257	AUDIO FILM CAPACITOR	CFTXA473J50
	C281, 282	AUDIO FILM CAPACITOR	CFTXA563J50
	C283, 284	AXIAL CERAMIC C.	CCPUSL470J50
	C287-290	ELECTR. CAPACITOR	CEAS4R7M50

Mark	No.	Description	Part No.
	C301, 302	AUDIO FILM CAPACITOR	CFTXA392J50
	C303, 304	ELECTR. CAPACITOR	CEYA100M50
	C305-308	AUDIO FILM CAPACITOR	CFTXA222J50
	C309, 310	AUDIO FILM CAPACITOR	CFTXA392J50
	C311, 312	AUDIO FILM CAPACITOR	CFTXA474J50
	C313, 314	AUDIO FILM CAPACITOR	CFTXA154J50
	C315, 316	AUDIO FILM CAPACITOR	CFTXA153J50
	C317, 318	ELECTR. CAPACITOR	CEYA010M50
	C319, 320	AUDIO FILM CAPACITOR	CFTXA224J50
	C321, 322	AUDIO FILM CAPACITOR	CFTXA683J50
	C323, 324	AUDIO FILM CAPACITOR	CFTXA563J50
	C325, 326	ELECTR. CAPACITOR	CEYA010M50
	C327, 328		CFTXA562J50
	C329, 330	AUDIO FILM CAPACITOR	CFTXA103J50
	C331-334	ELECTR. CAPACITOR(10/25)	RCH1037
	C353	AUDIO FILM CAPACITOR	CFTXA683J50
	C354	AUDIO FILM CAPACITOR	CFTXA682J50
	C357	MYLOR FILM CAPACITOR	CQMA104J50
	C358, 359	MYLOR FILM CAPACITOR	CQMA123J50
	C360	MYLOR FILM CAPACITOR	CQMA182J50
	C361	ELECTR. CAPACITOR	CEAS010M50
	C381	ELECTR. CAPACITOR	CEAS330M35
	C395, 396	CERAMIC CAPACITOR	CKPUYF103Z25
	C401, 402	AUDIO FILM CAPACITOR	CFTXA103J50
	C403, 404	AUDIO FILM CAPACITOR	CFTXA472J50
	C405, 406		CFTXA272J50
	C407, 408	AUDIO FILM CAPACITOR	CFTXA122J50
	C413, 414	AUDIO FILM CAPACITOR	CFTXA103J50
	C415, 416	AUDIO FILM CAPACITOR	CFTXA473J50
	C437, 438		CFTXA102J50
	C443, 444		CFTXA272J50
	C447, 448	ELECTR. CAPACITOR	CEYA221M16
	C451, 452	AUDIO FILM CAPACITOR	CFTXA274J50
	C453, 454	ELECTR. CAPACITOR	CEYA330M25
	C455, 456	AUDIO FILM CAPACITOR	CFTXA103J50
	C457, 458		CFTXA562J50
	C459, 460	AUDIO FILM CAPACITOR	CFTXA472J50
	C461, 462	AUDIO FILM CAPACITOR	CFTXA222J50
	C463	ELECTR. CAPACITOR	CEAS010M50
	C467, 468	PL. STYRENE CAPACITOR	CQSA561J50
	C469-471	AUDIO FILM CAPACITOR	CFTXA473J50
	C501	ELECTR. CAPACITOR	CEAS101M16
	C503, 504	ELECTR. CAPACITOR	CEAS330M35
	C510	AUDIO FILM CAPACITOR	CFTXA183J50
	C511	AUDIO FILM CAPACITOR	CFTXA332J50
	C512	AUDIO FILM CAPACITOR	CFTXA682J50
	C513	AUDIO FILM CAPACITOR	CFTXA332J50
	C514	CAPACITOR	CQPA752J100
	C515	ELECTR. CAPACITOR	CEAS330M35
	C541	AXIAL CAPACITOR	CKPUYB101K50
	C552	ELECTR. CAPACITOR	CEAS101M16
	C553, 554	CERAMIC CAPACITOR	CKCYF473Z50
	C555, 556	CERAMIC CAPACITOR	CCCSL221K500
	C557, 558	(390P/500)	RCG1004

Mark	No.	Description	Part No.
	C559, 560	AUDIO FILM CAPACITOR	CFTXA333J50
	C561, 562	AUDIO FILM CAPACITOR	CFTXA223J50
	C563, 564	CERAMIC CAPACITOR	CKPUYB331K50
	C565, 566	AUDIO FILM CAPACITOR	CFTXA103J50
	C567	ELECTR. CAPACITOR	CEAS330M35
	C569	CERAMIC CAPACITOR	CKCYF473Z50
	C570	ELECTR. CAPACITOR	CEAS010M50
	C604	ELECTR. CAPACITOR	CEAS010M50
	C701-703	CERAMIC CAPACITOR	CKCYF473Z50
	C711	ELECTR. CAPACITOR(3300 μF)	RCH1048
	C712	ELECTR. CAPACITOR(3300 μF)	RCH1049
	C713, 714	AUDIO FILM CAPACITOR	CFTXA563J50
	C715	ELECTR. CAPACITOR	CEAS221M25
	C717, 718	AXIAL CAPACITOR	CKPUYB101K50
	C719	ELECTR. CAPACITOR	CEYA100M50
	C722	ELECTR. CAPACITOR	CEYA010M50
	C723, 724	AUDIO FILM CAPACITOR	CFTXA563J50
	C725, 726	(100/25)	PCH1084
	C731, 732	CERAMIC CAPACITOR	CKCYF473Z50
	C733	ELECTR. CAPACITOR(6800/25)	RCH1032
	C734	ELECTR. CAPACITOR	CEAS101M16
	C735	ELECTR. CAPACITOR	CEAS102M6R3
	C736	ELECTR. CAPACITOR	CEAS102M16
	C737	ELECTR. CAPACITOR	CEAS472M16
	C738	CERAMIC CAPACITOR	CKCYF473Z50
	C741	CERAMIC CAPACITOR	CKCYF473Z50
	C742	ELECTR. CAPACITOR	CEAS101M50
	C743	CERAMIC CAPACITOR	CKCYF473Z50
	C744	ELECTR. CAPACITOR	CEAS101M50
	C745	CERAMIC CAPACITOR	CKCYF473Z50
	C751	ELECTR. CAPACITOR	CEAS4R7M50
	C752	CERAMIC CAPACITOR	CKPUYF103Z25
	C753	ELECTR. CAPACITOR	CEAS330M35
	C855	ELECTR. CAPACITOR	CEAS101M10
RESISTORS			
	R101, 102	CARBONFILM RESISTOR	RDR1/4PM□□□J
	R103-108	CARBONFILM RESISTOR	RD1/6PM□□□J
	R109-124	CARBONFILM RESISTOR	RDR1/4PM□□□J
	R153, 154	CARBONFILM RESISTOR	RDR1/4PM□□□J
⚠	R155	FUSIBLE RESISTOR	RFA1/4L□□□J
	R157, 158	CARBONFILM RESISTOR	RD1/6PM□□□J
	R161-164	CARBONFILM RESISTOR	RD1/6PM□□□J
	R165, 166	CARBONFILM RESISTOR	RDR1/4PM□□□J
	R200-204	CARBONFILM RESISTOR	RDR1/4PM□□□J
	R205-222	CARBONFILM RESISTOR	RD1/6PM□□□J
	R251	CARBONFILM RESISTOR	RD1/4PM□□□J
	R252-255	CARBONFILM RESISTOR	RD1/6PM□□□J
	R281-286	CARBONFILM RESISTOR	RD1/6PM□□□J
	R289-297	CARBONFILM RESISTOR	RD1/6PM□□□J
	R301	CARBONFILM RESISTOR	RDR1/4PM□□□J
	R303, 304	CARBONFILM RESISTOR	RD1/6PM□□□J
	R305-308	CARBONFILM RESISTOR	RDR1/4PM□□□J
	R309-326	CARBONFILM RESISTOR	RD1/6PM□□□J
	R327, 328	CARBONFILM RESISTOR	RDR1/4PM□□□J

Mark	No.	Description	Part No.
	R351-361	CARBONFILM RESISTOR	RD1/6PM□□□J
	R363	CARBONFILM RESISTOR	RD1/6PM□□□J
	R365, 366	CARBONFILM RESISTOR	RD1/6PM□□□J
	R381-383	CARBONFILM RESISTOR	RD1/6PM□□□J
	R401-410	CARBONFILM RESISTOR	RD1/6PM□□□J
	R411, 412	CARBONFILM RESISTOR	RDR1/4PM□□□J
	R413-416	CARBONFILM RESISTOR	RD1/6PM□□□J
	R417, 418	CARBONFILM RESISTOR	RDR1/4PM□□□J
	R419-428	CARBONFILM RESISTOR	RD1/6PM□□□J
	R431, 432	CARBONFILM RESISTOR	RDR1/4PM□□□J
	R433-452	CARBONFILM RESISTOR	RD1/6PM□□□J
	R453, 454	CARBONFILM RESISTOR	RDR1/4PM□□□J
	R455-463	CARBONFILM RESISTOR	RD1/6PM□□□J
	R501, 502	CARBONFILM RESISTOR	RD1/6PM□□□J
	R503	CARBONFILM RESISTOR	RD1/2PMF□□□J
	R504-507	CARBONFILM RESISTOR	RD1/6PM□□□J
	R510	CARBONFILM RESISTOR	RD1/2LF□□□J
	R511, 512	CARBONFILM RESISTOR	RD1/6PM□□□J
	R514	CARBONFILM RESISTOR	RD1/4PM□□□J
	R515	CARBONFILM RESISTOR	RD1/6PM□□□J
	R517, 518	CARBONFILM RESISTOR	RD1/2PMF□□□J
	R541, 542	CARBONFILM RESISTOR	RD1/6PM□□□J
	R551-553	CARBONFILM RESISTOR	RD1/6PM□□□J
	R555-559	CARBONFILM RESISTOR	RD1/6PM□□□J
	R601, 602	CARBONFILM RESISTOR	RDR1/4PM□□□J
	R603, 604	CARBONFILM RESISTOR	RD1/6PM□□□J
	R607, 608	CARBONFILM RESISTOR	RDR1/4PM□□□J
	R609-612	CARBONFILM RESISTOR	RD1/6PM□□□J
	R613, 614	CARBONFILM RESISTOR	RDR1/4PM□□□J
	R615, 616	CARBONFILM RESISTOR	RD1/6PM□□□J
	R617, 618	CARBONFILM RESISTOR	RDR1/4PM□□□J
	R701	CARBONFILM RESISTOR	RD1/2PMF□□□J
	R703	CARBONFILM RESISTOR	RDR1/4PM□□□J
	R705	CARBONFILM RESISTOR	RDR1/4PM□□□J
	R709-712	CARBONFILM RESISTOR	RDR1/4PM□□□J
	R741	CARBONFILM RESISTOR	RD1/2PMF□□□J
⚠	R742	FUSIBLE RESISTOR	RFA1/4L□□□J
	R743	METAL OXIDE RESISTOR	RS1LMF□□□J
	R751-759	CARBONFILM RESISTOR	RD1/6PM□□□J
	VR101, 102	VR	VRTS6VS472
	VR105, 106	(20K)	RCP1017
	VR281, 282	VR	VRTB6VS223
	VR351, 352	SEMI-FIXED RESISTOR	VRTB6VS103
	VR353	VR	VRTB6VS473
	VR401, 402	(20K)	RCP1017
	VR501	VR	VRTG6VS103
	VR502	VR	VRTG6VS473
	VR551, 552	VR	VRTG6VS473
	VR553, 554	VR	VRTB6VS472
OTHERS			
	CN31		B8P-SHF-1AA
	JA31	JACK	RKN1014

5. P.C.B's PARTS LIST

NOTES:

- Parts without part number cannot be supplied.
- Parts marked by "⊙" are not always kept in stock. Their delivery time may be longer than usual or they may be unavailable.
- The ⚠ mark found on some component parts indicates the importance of the safety factor of the part. Therefore, when replacing, be sure to use parts of identical designation.
- When ordering resistors, first convert resistance values into code form as shown in the following examples.

Ex.1 When there are 2 effective digits (any digit apart from 0), such as 560 ohm and 47k ohm (tolerance is shown by J=5%, and K=10%)

560 Ω → 56 × 10^1 → 561 ····· RD1/4PS 5 6 1 J
47k Ω → 47 × 10^3 → 473 ····· RD1/4PS 4 7 3 J
0.5 Ω → 0R5 ····· RN2H 0 R 5 K
1 Ω → 010 ····· RS1P 0 1 0 K

Ex.2 When there are 3 effective digits (such as in high precision metal film resistors).

5.62k Ω → 562 × 10^1 → 5621 ····· RN1/4SR 5 6 2 1 F

Mark	No.	Description	Part No.
INPUT VR UNIT			
RESISTORS			
	R973, 974	CARBONFILM RESISTOR	RDR1/4PM□□□J
	VR971		RCV1067
OTHERS			
	CN31	SSQ CONNECTOR 8P	SSQ-8-A
	JA11	JACK	PKB1005
PINJACK UNIT			
OTHERS			
	JA22	JACK	PKB1006
MOTOR VR UNIT			
SEMICONDUCTORS			
	IC521	MECHANISM DRIVER IC	TA7291S
CAPACITORS			
	C521	ELECTR. CAPACITOR	CEAS100M16
	C522, 523	CERAMIC CAPACITOR	CKCYF473Z50
RESISTORS			
	R521-524	CARBONFILM RESISTOR	RD1/6PM□□□J
	VR521	(5K)	RCS1023
HX SW UNIT			
SWITCHES			
	S551		RSB1002
TIMER SW UNIT			
SWITCHES			
	S981		RSH1011
OPERATION UNIT			
SEMICONDUCTORS			
	IC921		PD3170A
	Q921	DIGITAL TRANSISTOR	XDC114ES
	Q922, 923	DIGITAL TRANSISTOR	XDA114ES
	Q924	DIGITAL TRANSISTOR	XDC114ES
	Q925	TRANSISTOR	2SC1740S
	D924-931	DIODE	1SS254
	D941	LED	SEL2215S
SWITCHES			
	S921-936	SWITCH	RSG1023
	S941	SWITCH	RSG-150
	S951		RSB1001
	S961	SWITCH	RSG1027
CAPACITORS			
	C921	ELECTR. CAPACITOR	CEAS100M16
	C922	CERAMIC CAPACITOR	CKPUYY103N16
	C923	ELECTR. CAPACITOR	CEAS220M35
RESISTORS			
	R921-954	CARBONFILM RESISTOR	RD1/6PM□□□J
	R956-961	CARBONFILM RESISTOR	RD1/6PM□□□J
	R963-970	CARBONFILM RESISTOR	RD1/6PM□□□J
	VR973	VARIABLE RESISTOR(200K)	RCV1046
OTHERS			
	V921		RAW1056
	X921	CERAMIC RESONATOR	VSS1014
CONTROL UNIT			
SEMICONDUCTORS			
	IC801	MAIN CPU	PD4290C
	IC831	IC	BA6109
	IC851	DUAL-COMPARATOR IC	M52331
	IC861	IC	BA6109
	IC871	LOGIC IC	CD4050B
	IC872	DUAL-COMPARATOR IC	M52331
	Q801-803	DIGITAL TRANSISTOR	XDA114ES
	Q804	DIGITAL TRANSISTOR	DTC114TS
	Q805	DIGITAL TRANSISTOR	XDA114ES
	Q806	TRANSISTOR	DTC124TS
	Q833-835	DIGITAL TRANSISTOR	DTC114TS
	Q851	DIGITAL TRANSISTOR	DTC114TS
	Q852	DIGITAL TRANSISTOR	XDA114ES
	Q861	TRANSISTOR	2SA1319A

Mark	No.	Description	Part No.
	Q862	TRANSISTOR	2SA936
	Q863	TRANSISTOR	2SA1309A
	Q864	DIGITAL TRANSISTOR	DTC114TS
	Q871	DIGITAL TRANSISTOR	XDA114ES
	Q872-874	DIGITAL TRANSISTOR	DTC114TS
	D804-810	DIODE	1SS254
⚠	D861	RECTIFIER DIODE	1SR35-100A

COILS/TRANSFORMERS

	L831		RTF1068

CAPACITORS

	C801	CERAMIC CAPACITOR	CKPUYY103N16
	C802	ELECTR. CAPACITOR	CEAS101M10
	C803	ELECTR. CAPACITOR	CEAS102M6R3
	C805	ELECTR. CAPACITOR	CEAS100M16
	C808-810	AXIAL CAPACITOR	CKPUYB101K50
	C822	AXIAL CAPACITOR	CKPUYB821K50
	C831	CERAMIC CAPACITOR	CKPUYY103N16
	C832	CERAMIC CAPACITOR	CKCYF473Z50
	C851	AXIAL CAPACITOR	CKPUYB101K50
	C852	CERAMIC CAPACITOR	CGCYX473K25
	C853	ELECTR. CAPACITOR	CEAS220M25
	C854	ELECTR. CAPACITOR	CEAS100M16
	C855	CERAMIC CAPACITOR	CKCYF473Z50
	C856	CERAMIC CAPACITOR	CGCYX473K25
	C861	CERAMIC CAPACITOR	CKPUYY103N16
	C862	ELECTR. CAPACITOR	CEANP4R7M35
	C863	ELECTR. CAPACITOR	CEASR22M50
	C864	ELECTR. CAPACITOR	CEAS330M16
	C871	CERAMIC CAPACITOR	CKPUYY103N16
	C872	CERAMIC CAPACITOR	CKCYF473Z50
	C873	ELECTR. CAPACITOR	CEAS100M16

RESISTORS

	R801-810	CARBONFILM RESISTOR	RD1/6PM□□□J
	R813	CARBONFILM RESISTOR	RD1/6PM□□□J
	R816-822	CARBONFILM RESISTOR	RD1/6PM□□□J
	R831-835	CARBONFILM RESISTOR	RD1/6PM□□□J
	R851-859	CARBONFILM RESISTOR	RD1/6PM□□□J
	R861	METAL OXIDE RESISTOR	RS1LMF□□□J
	R862-867	CARBONFILM RESISTOR	RD1/6PM□□□J
	R872	(10K)	RCX1042
	R873-876	METALFILM RESISTOR	RN1/6PQ□□□□F
	R877-879	CARBONFILM RESISTOR	RD1/6PM□□□J

OTHERS

	X801	CERAMIC RESONATOR	VSS1014

MAIN UNIT

SEMICONDUCTORS

	IC101	OP-AMP-IC	M5220P
	IC152	OP-AMP, IC	M5218AP
	IC201	DOLBY-B, C IC	CX20188
	IC251	IC	BA335
	IC281	OP-AMP IC	XRA15218N
	IC282		BA6138
	IC301	DOLBY-B, C IC	CX20188
	IC351	OP-AMP IC	XRA15218
	IC401, 402	OP AMP	M5238PF
	IC551	DOLBY HX PRO IC	UPC1297CA
	IC701	OP-AMP, IC	M5218AL
	IC702	OP-AMP IC	M5223L
⚠	IC731	REGULATOR IC	NJM7812FA
⚠	IC732	REGULATOR IC	NJM7805FA
	Q101, 102	N-DUAL-FET	2SK389
	Q103, 104	DIGITAL TRANSISTOR	DTC114TS
	Q281, 282	DIGITAL TRANSISTOR	DTC114TS
	Q283	TRANSISTOR	XDC124ES
	Q351, 352	TRANSISTOR	2SD1302
	Q353-356	DIGITAL TRANSISTOR	DTC114TS
	Q401-408	DIGITAL TRANSISTOR	DTC114TS
	Q419-428	DIGITAL TRANSISTOR	DTC114TS
	Q433, 434	TRANSISTOR	2SD1302
	Q437-442	DIGITAL TRANSISTOR	DTC114TS
	Q455, 456	DIGITAL TRANSISTOR	DTC114TS
	Q459-462	DIGITAL TRANSISTOR	DTC114TS
	Q471-479	DIGITAL TRANSISTOR	XDA114ES
	Q501	TRANSISTOR	XDC124ES
	Q502	TRANSISTOR	2SA1283
	Q503-505	TRANSISTOR	XDC124ES
	Q506	TRANSISTOR	2SC3311A
	Q510, 511	TRANSISTOR	2SC3243
	Q512	TRANSISTOR	2SD1302
	Q551	DIGITAL TRANSISTOR	XDA114ES
	Q552	TRANSISTOR	XDC124ES
	Q553	TRANSISTOR	2SA1309A
	Q555, 556	TRANSISTOR	XDC124ES
	Q601-604	TRANSISTOR	2SD1302
	Q606	TRANSISTOR	XDC124ES
⚠	Q701	TRANSISTOR	2SD1267
⚠	Q702	TRANSISTOR	2SB942
⚠	Q741	TRANSISTOR	2SA1283
	Q751	TRANSISTOR	2SA1309A
	Q752	DIGITAL TRANSISTOR	DTC114TS
	Q753	DIGITAL TRANSISTOR	XDA114ES
	Q754	TRANSISTOR	2SC3311A
	D151	DIODE	1SS254
	D401, 402	DIODE	1SS254
	D471	DIODE	1SS254
	D504	DIODE	1SS254
	D541, 542	DIODE	1SS254
	D551, 552	DIODE	1SS254
	D601	DIODE	1SS254
⚠	D701-704		31DF2-FC5
⚠	D709	ZENER DIODE	HZ5BLL
⚠	D731	POWER DIODE	1B2C1-LC2
⚠	D732	POWER DIODE	1B2Z1-LC2
⚠	D733, 734	RECRIFIER DIODE	1SR35-100A
⚠	D741	RECRIFIER DIODE	1SR35-100A
	D742	ZENER DIODE	MTZJ7.5B

Mark	No.	Description	Part No.
⚠	D743	ZENER DIODE	MTZJ24A
	D751-753	DIODE	1SS254
SWITCHES			
	S381		RSH1025
RELAYS			
	RY151		RSR1016
	RY601		RSR1016
COILS/TRANSFORMERS			
	L101, 102	COIL	RTF1022
	L103, 104	COIL	RTF1060
	L401, 402	COIL	RTF1022
	L403, 404		RTF1013
	L501		RTF1160
	L505		RTD1057
	L541	COIL	RTF1022
	L551, 552		RTD1045
	L553, 554	RADIAL INDUCTOR	LFA182J
	L851	RADIAL INDUCTOR	LFA121K
	F301, 302	FILTER	RTF1066
CAPACITORS			
	C101, 102	PL. STYRENE CAPACITOR	CQSF151J50
	C103, 104	AUDIO FILM CAPACITOR	CFTXA563J50
	C105, 106	ELECTR. CAPACITOR	RCH1037
	C107, 108	CERAMIC CAPACITOR	CKPUYB121K50
	C109, 110	AUDIO FILM CAPACITOR	CFTXA472J50
	C111, 112	AUDIO FILM CAPACITOR	CFTXA273J50
	C115-120	(100/25)	PCH1076
	C151	ELECTR. CAPACITOR	CEAS100M50
	C153	CERAMIC CAPACITOR	CKCYF473Z50
	C155, 156	ELECTR. CAPACITOR	CEYA010M50
	C157, 158	AXIAL CAPACITOR	CKPUYB221K50
	C159, 160	(100/25)	PCH1076
	C201-204	AUDIO FILM CAPACITOR	CFTXA222J50
	C205, 206	AUDIO FILM CAPACITOR	CFTXA392J50
	C207, 208	AUDIO FILM CAPACITOR	CFTXA474J50
	C209, 210	AUDIO FILM CAPACITOR	CFTXA154J50
	C211, 212	AUDIO FILM CAPACITOR	CFTXA153J50
	C213, 214	ELECTR. CAPACITOR	CEYA010M50
	C215, 216	AUDIO FILM CAPACITOR	CFTXA224J50
	C217, 218	AUDIO FILM CAPACITOR	CFTXA683J50
	C219, 220	AUDIO FILM CAPACITOR	CFTXA563J50
	C221, 222	ELECTR. CAPACITOR	CEYA010M50
	C223, 224		CFTXA562J50
	C225, 226	AUDIO FILM CAPACITOR	CFTXA103J50
	C227, 228	(10/25)	RCH1037
	C251, 252	AUDIO FILM CAPACITOR	CFTXA104J50
	C253	AUDIO FILM CAPACITOR	CFTXA473J50
	C254, 255	AUDIO FILM CAPACITOR	CFTXA104J50
	C256	ELECTR. CAPACITOR	CEASR47M50
	C257	AUDIO FILM CAPACITOR	CFTXA473J50
	C281, 282	AUDIO FILM CAPACITOR	CFTXA563J50
	C283, 284	AXIAL CERAMIC C.	CCPUSL470J50
	C287-290	ELECTR. CAPACITOR	CEAS4R7M50

Mark	No.	Description	Part No.
	C301, 302	AUDIO FILM CAPACITOR	CFTXA392J50
	C303, 304	ELECTR. CAPACITOR	CEYA100M50
	C305-308	AUDIO FILM CAPACITOR	CFTXA222J50
	C309, 310	AUDIO FILM CAPACITOR	CFTXA392J50
	C311, 312	AUDIO FILM CAPACITOR	CFTXA474J50
	C313, 314	AUDIO FILM CAPACITOR	CFTXA154J50
	C315, 316	AUDIO FILM CAPACITOR	CFTXA153J50
	C317, 318	ELECTR. CAPACITOR	CEYA010M50
	C319, 320	AUDIO FILM CAPACITOR	CFTXA224J50
	C321, 322	AUDIO FILM CAPACITOR	CFTXA683J50
	C323, 324	AUDIO FILM CAPACITOR	CFTXA563J50
	C325, 326	ELECTR. CAPACITOR	CEYA010M50
	C327, 328		CFTXA562J50
	C329, 330	AUDIO FILM CAPACITOR	CFTXA103J50
	C331-334	ELECTR. CAPACITOR(10/25)	RCH1037
	C353	AUDIO FILM CAPACITOR	CFTXA683J50
	C354	AUDIO FILM CAPACITOR	CFTXA682J50
	C357	MYLOR FILM CAPACITOR	CQMA104J50
	C358, 359	MYLOR FILM CAPACITOR	CQMA123J50
	C360	MYLOR FILM CAPACITOR	CQMA182J50
	C361	ELECTR. CAPACITOR	CEAS010M50
	C381	ELECTR. CAPACITOR	CEAS330M35
	C395, 396	CERAMIC CAPACITOR	CKPUYF103Z25
	C401, 402	AUDIO FILM CAPACITOR	CFTXA103J50
	C403, 404	AUDIO FILM CAPACITOR	CFTXA472J50
	C405, 406		CFTXA272J50
	C407, 408	AUDIO FILM CAPACITOR	CFTXA122J50
	C413, 414	AUDIO FILM CAPACITOR	CFTXA103J50
	C415, 416	AUDIO FILM CAPACITOR	CFTXA473J50
	C437, 438		CFTXA102J50
	C443, 444		CFTXA272J50
	C447, 448	ELECTR. CAPACITOR	CEYA221M16
	C451, 452	AUDIO FILM CAPACITOR	CFTXA271J50
	C453, 454	ELECTR. CAPACITOR	CEYA330M25
	C455, 456	AUDIO FILM CAPACITOR	CFTXA103J50
	C457, 458		CFTXA562J50
	C459, 460	AUDIO FILM CAPACITOR	CFTXA472J50
	C461, 462	AUDIO FILM CAPACITOR	CFTXA222J50
	C463	ELECTR. CAPACITOR	CEAS010M50
	C467, 468	PL. STYRENE CAPACITOR	CQSA561J50
	C469-471	AUDIO FILM CAPACITOR	CFTXA473J50
	C501	ELECTR. CAPACITOR	CEAS101M16
	C503, 504	ELECTR. CAPACITOR	CEAS330M35
	C510	AUDIO FILM CAPACITOR	CFTXA183J50
	C511	AUDIO FILM CAPACITOR	CFTXA332J50
	C512	AUDIO FILM CAPACITOR	CFTXA682J50
	C513	AUDIO FILM CAPACITOR	CFTXA332J50
	C514	CAPACITOR	CQPA752J100
	C515	ELECTR. CAPACITOR	CEAS330M35
	C541	AXIAL CAPACITOR	CKPUYB101K50
	C552	ELECTR. CAPACITOR	CEAS101M16
	C553, 554	CERAMIC CAPACITOR	CKCYF473Z50
	C555, 556	CERAMIC CAPACITOR	CCCSL222K500
	C557, 558	(390P/500)	RCG1004

Mark	No.	Description	Part No.
	C559, 560	AUDIO FILM CAPACITOR	CFTXA333J50
	C561, 562	AUDIO FILM CAPACITOR	CFTXA223J50
	C563, 564	CERAMIC CAPACITOR	CKPUYB331K50
	C565, 566	AUDIO FILM CAPACITOR	CFTXA103J50
	C567	ELECTR. CAPACITOR	CEAS330M35
	C569	CERAMIC CAPACITOR	CKCYF473Z50
	C570	ELECTR. CAPACITOR	CEAS010M50
	C604	ELECTR. CAPACITOR	CEAS010M50
	C701-703	CERAMIC CAPACITOR	CKCYF473Z50
	C711	ELECTR. CAPACITOR(3300 μF)	RCH1048
	C712	ELECTR. CAPACITOR(3300 μF)	RCH1049
	C713, 714	AUDIO FILM CAPACITOR	CFTXA563J50
	C715	ELECTR. CAPACITOR	CEAS221M25
	C717, 718	AXIAL CAPACITOR	CKPUYB101K50
	C719	ELECTR. CAPACITOR	CEYA100M50
	C722	ELECTR. CAPACITOR	CEYA010M50
	C723, 724	AUDIO FILM CAPACITOR	CFTXA563J50
	C725, 726	(100/25)	PCH1084
	C731, 732	CERAMIC CAPACITOR	CKCYF473Z50
	C733	ELECTR. CAPACITOR(6800/25)	RCH1032
	C734	ELECTR. CAPACITOR	CEAS101M16
	C735	ELECTR. CAPACITOR	CEAS102M6R3
	C736	ELECTR. CAPACITOR	CEAS102M16
	C737	ELECTR. CAPACITOR	CEAS472M16
	C738	CERAMIC CAPACITOR	CKCYF473Z50
	C741	CERAMIC CAPACITOR	CKCYF473Z50
	C742	ELECTR. CAPACITOR	CEAS101M50
	C743	CERAMIC CAPACITOR	CKCYF473Z50
	C744	ELECTR. CAPACITOR	CEAS101M50
	C745	CERAMIC CAPACITOR	CKCYF473Z50
	C751	ELECTR. CAPACITOR	CEAS4R7M50
	C752	CERAMIC CAPACITOR	CKPUYF103Z25
	C753	ELECTR. CAPACITOR	CEAS330M35
	C855	ELECTR. CAPACITOR	CEAS101M10

RESISTORS

Mark	No.	Description	Part No.
	R101, 102	CARBONFILM RESISTOR	RDR1/4PM□□□J
	R103-108	CARBONFILM RESISTOR	RD1/6PM□□□J
	R109-124	CARBONFILM RESISTOR	RDR1/4PM□□□J
	R153, 154	CARBONFILM RESISTOR	RDR1/4PM□□□J
⚠	R155	FUSIBLE RESISTOR	RFA1/4L□□□J
	R157, 158	CARBONFILM RESISTOR	RD1/6PM□□□J
	R161-164	CARBONFILM RESISTOR	RD1/6PM□□□J
	R165, 166	CARBONFILM RESISTOR	RDR1/4PM□□□J
	R200-204	CARBONFILM RESISTOR	RDR1/4PM□□□J
	R205-222	CARBONFILM RESISTOR	RD1/6PM□□□J
	R251	CARBONFILM RESISTOR	RD1/4PM□□□J
	R252-255	CARBONFILM RESISTOR	RD1/6PM□□□J
	R281-286	CARBONFILM RESISTOR	RD1/6PM□□□J
	R289-297	CARBONFILM RESISTOR	RD1/6PM□□□J
	R301	CARBONFILM RESISTOR	RDR1/4PM□□□J
	R303, 304	CARBONFILM RESISTOR	RD1/6PM□□□J
	R305-308	CARBONFILM RESISTOR	RDR1/4PM□□□J
	R309-326	CARBONFILM RESISTOR	RD1/6PM□□□J
	R327, 328	CARBONFILM RESISTOR	RDR1/4PM□□□J
	R351-361	CARBONFILM RESISTOR	RD1/6PM□□□J
	R363	CARBONFILM RESISTOR	RD1/6PM□□□J
	R365, 366	CARBONFILM RESISTOR	RD1/6PM□□□J
	R381-383	CARBONFILM RESISTOR	RD1/6PM□□□J
	R401-410	CARBONFILM RESISTOR	RD1/6PM□□□J
	R411, 412	CARBONFILM RESISTOR	RDR1/4PM□□□J
	R413-416	CARBONFILM RESISTOR	RD1/6PM□□□J
	R417, 418	CARBONFILM RESISTOR	RDR1/4PM□□□J
	R419-428	CARBONFILM RESISTOR	RD1/6PM□□□J
	R431, 432	CARBONFILM RESISTOR	RDR1/4PM□□□J
	R433-452	CARBONFILM RESISTOR	RD1/6PM□□□J
	R453, 454	CARBONFILM RESISTOR	RDR1/4PM□□□J
	R455-463	CARBONFILM RESISTOR	RD1/6PM□□□J
	R501, 502	CARBONFILM RESISTOR	RD1/6PM□□□J
	R503	CARBONFILM RESISTOR	RD1/2PMF□□□J
	R504-507	CARBONFILM RESISTOR	RD1/6PM□□□J
	R510	CARBONFILM RESISTOR	RD1/2LF□□□J
	R511, 512	CARBONFILM RESISTOR	RD1/6PM□□□J
	R514	CARBONFILM RESISTOR	RD1/4PM□□□J
	R515	CARBONFILM RESISTOR	RD1/6PM□□□J
	R517, 518	CARBONFILM RESISTOR	RD1/2PMF□□□J
	R541, 542	CARBONFILM RESISTOR	RD1/6PM□□□J
	R551-553	CARBONFILM RESISTOR	RD1/6PM□□□J
	R555-559	CARBONFILM RESISTOR	RD1/6PM□□□J
	R601, 602	CARBONFILM RESISTOR	RDR1/4PM□□□J
	R603, 604	CARBONFILM RESISTOR	RD1/6PM□□□J
	R607, 608	CARBONFILM RESISTOR	RDR1/4PM□□□J
	R609-612	CARBONFILM RESISTOR	RD1/6PM□□□J
	R613, 614	CARBONFILM RESISTOR	RDR1/4PM□□□J
	R615, 616	CARBONFILM RESISTOR	RD1/6PM□□□J
	R617, 618	CARBONFILM RESISTOR	RDR1/4PM□□□J
	R701	CARBONFILM RESISTOR	RD1/2PMF□□□J
	R703	CARBONFILM RESISTOR	RDR1/4PM□□□J
	R705	CARBONFILM RESISTOR	RDR1/4PM□□□J
	R709-712	CARBONFILM RESISTOR	RDR1/4PM□□□J
	R741	CARBONFILM RESISTOR	RD1/2PMF□□□J
⚠	R742	FUSIBLE RESISTOR	RFA1/4L□□□J
	R743	METAL OXIDE RESISTOR	RS1LMF□□□J
	R751-759	CARBONFILM RESISTOR	RD1/6PM□□□J
	VR101, 102	VR	VRTS6VS472
	VR105, 106	(20K)	RCP1017
	VR281, 282	VR	VRTB6VS223
	VR351, 352	SEMI-FIXED RESISTOR	VRTB6VS103
	VR353	VR	VRTB6VS473
	VR401, 402	(20K)	RCP1017
	VR501	VR	VRTG6VS103
	VR502	VR	VRTG6VS473
	VR551, 552	VR	VRTG6VS473
	VR553, 554	VR	VRTB6VS472

OTHERS

Mark	No.	Description	Part No.
	CN31		B8P-SHF-1AA
	JA31	JACK	RKN1014

Mark	No.	Description	Part No.
HEDPHONE UNIT			
SEMICONDUCTORS			
	IC901	OP-AMP, IC	M5218AP
CAPACITORS			
	C901, 902	ELECTR. CAPACITOR	CEYA010M50
	C903, 904	ELECTR. CAPACITOR(100/25)	PCH1076
	C907, 908	AXIAL CAPACITOR	CKPUYB221K50
RESISTORS			
	R901-906	CARBONFILM RESISTOR	RD1/6PM□□□J
	R907, 908	CARBONFILM RESISTOR	RDR1/4PM□□□J
	R909, 910	CARBONFILM RESISTOR	RD1/6PM□□□J
	VR901	VARIABLE RESISTOR	RCV1043
OTHERS			
	JA51	JACK	RKN1019
POWER SW UNIT			
SWITCHES			
⚠	S991	SWITCH	RSA-063
CAPACITORS			
⚠	C991	CAPACITOR (0.01/AC400)	VCG-044
REC SW UNIT			
SWITCHES			
	S3	SWITCH	RSG-143
TAPE SELECTOR UNIT			
SWITCHES			
	S1, 2		RSH-070
CONNECTOR UNIT			
CAPACITORS			
	C1	CERAMIC CAPACITOR	CKCYF473Z50
RESISTORS			
	R4, 5	CARBONFILM RESISTOR	RD1/6PM□□□J
SENSOR UNIT (A)			
SEMICONDUCTORS			
	D1		GP1A51HR
CAPACITORS			
	C2	CERAMIC CAPACITOR	CKPUYY103N16
RESISTORS			
	R2	CARBONFILM RESISTOR	RD1/6PM□□□J

Mark	No.	Description	Part No.
SENSOR UNIT (B)			
SEMICONDUCTORS			
	D2		GP1A51HR
CAPACITORS			
	C3	CERAMIC CAPACITOR	CKPUYY103N16
RESISTORS			
	R3	CARBONFILM RESISTOR	RD1/6PM□□□J
DOOR SW UNIT			
SWITCHES			
	S4	SWITCH	RSK1002

6. ADJUSTMENTS

6.1 MECHANISM RELATED ADJUSTMENT

1. Tape Speed Adjustment

Mode	Adjustment Location	Specifications
PLAY	Capstan motor adjustment hole (Refer to Fig. 1.)	Adjust so that the playback frequency is 3000 ± 5 Hz at the beginning of winding of test tape STD–301.
PLAY		Playback test tape STD–301 again and confirm that the above specifications are satisfied.

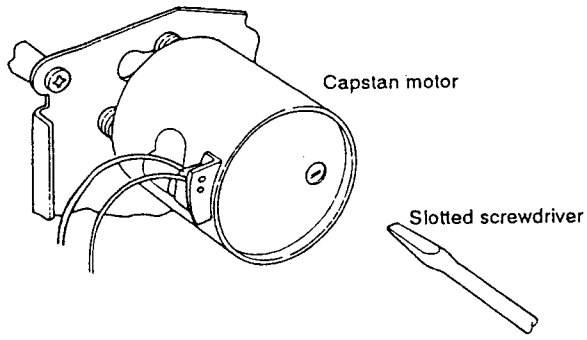

Fig. 1

2. Adjustment of Door Damper

Adjustment Location	Specifications
Cylinder adjustment screw (Refer to Fig. 2.)	Make sure that the door opens smoothly, there is no two–stage motion, and that there is no bounding when it opens completely. (Perform with no cassette half inserted.)

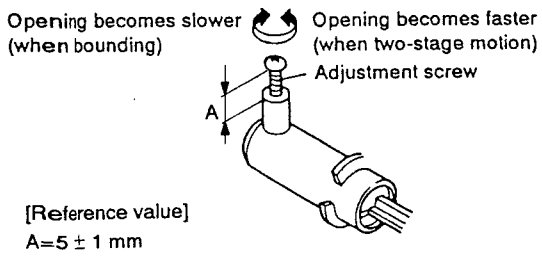

Fig. 2

3. Tape running and azimuth adjustment

No.	Mode	Adjustment Location	Specifications
1			Insert half mirror in side A (set screws at front).
2	PLAY	Height adjustment nut (Refer to Fig. 3.)	Playback the above tape and adjust so that there is no curling of the tape in the guide section of the head. (Refer to Fig. 4.)
3	PLAY	Azimuth adjustment screw (Refer to Fig. 3.)	Playback test tape STD-331B and adjust so that the 10 kHz output level is maximum and also so that there is no phase difference between L-ch and R-ch.
4	Check Item 2 above again and adjust again if it dnes not satisfy the specifications. (Be sure to adjust Item 3 when Item 2 is adjusted.)		

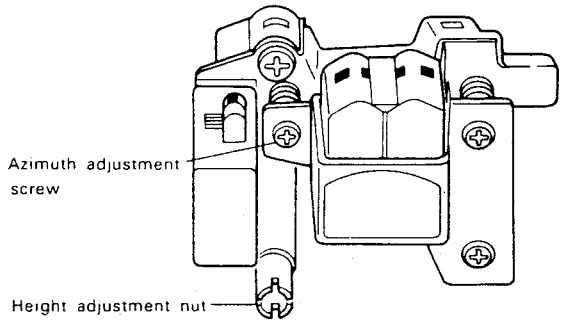

Fig. 3.

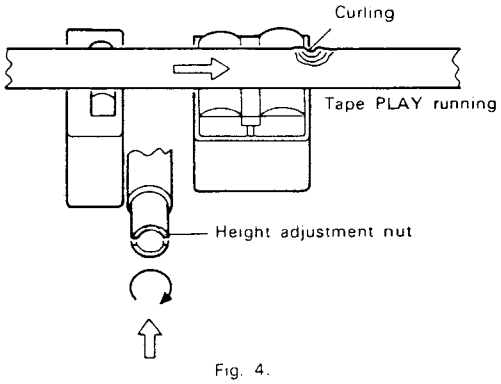

Fig. 4.

6.2 ELECTRICAL ADJUSTMENTS

Adjustment Conditions

1. The mechanical adjustments must be completed first.
2. The head must be cleaned and demagnetized.
3. Turn power on allow the deck to warm up for at least a few minutes before commencing any electrical adjustments.
4. The reference signal is 0 dBv=1 Vrms.
5. Connect a 50 kΩ (or between 47k to 52 kΩ) load resistance to the OUTPUT terminals.
6. Unless otherwise specified, the switches listed below are left in the positions indicated.
   DOLBY NR : OFF
   TAPE SELECTOR : NORM

Test Tapes

STD–331B : Playback adjustments (See Fig. 6–1)
STD–630 : NORMAL blank tape
STD–620 : CrO_2 blank tape
STD–610 : METAL blank tape

List of Adjustments

Playback sections

1. Head azimuth adjustment.
2. Playback level adjustment.
3. DC balance adjustment.

Recording sections

1. Bias oscillator adjustment.
2. Bias trap adjustment.
3. Recording bias adjustment.
4. Recording level adjustment.
5. Level meter check.
6. AUTO BLE adjustment.

NOTE: This unit has an automatic tape selection feature.

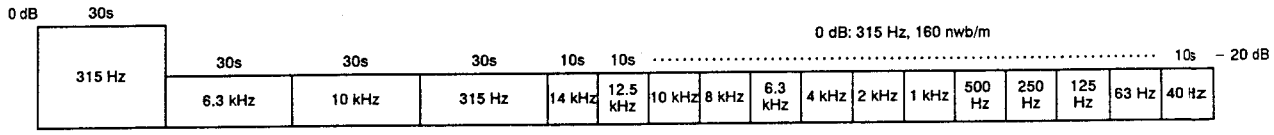

Fig. 6–1 Constants of the test tape STD–331B

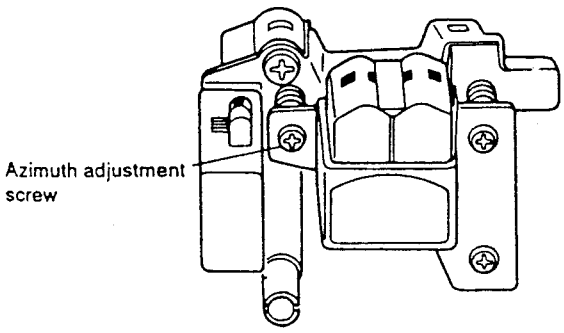

Fig. 6–2 Head azimuth adjustment

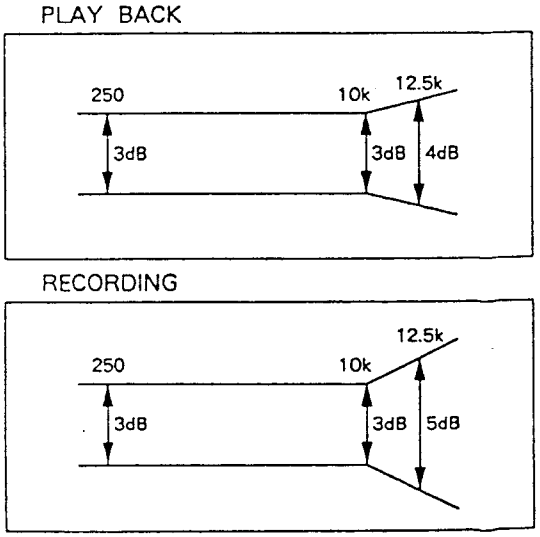

Fig. 6–3 Frequency response zone

PLAYBACK SECTION

1. Head Azimuth Adjustment

- Turn VR105, 106 to mechanical center positions.

No.	Mode	Input signal & test tape	Adjustment location	Measuring location	Adjustment value	Remarks
1.	PLAY	Play the 10 kHz/–20 dB section of STD–331B test tape.	Head azimuth adjustment screw. (See Fig. 6–2)	LINE OUT	Maximum playback signal level.	
2.	STOP	Lock the screw with screw lock after completing adjustment.				

2. Playback Level Adjustment

- This adjustment determines the DOLBY NR level, and must be performed with great care.

No.	Mode	Input signal & test tape	Adjustment location		Measuring location	Adjustment value	Remarks
1.	PLAY	Play the 315 Hz/0 dB section of the STD–331B test tape.	Deck	VR105 (Lch) VR106 (Rch)	TP. 3 (Lch) TP. 4 (Rch)	–14.7 dBv	This adjustment must be performed accurately for proper Dolby level setting.

3. DC Balance Adjustment

No.	Mode	Input signal & test tape	Adjustment location	Measuring location	Adjustment value	Remarks
1.			VR101 (Lch) VR102 (Rch)	TP. 21 (Lch) TP. 22 (Rch)	0V ± 0.2V	

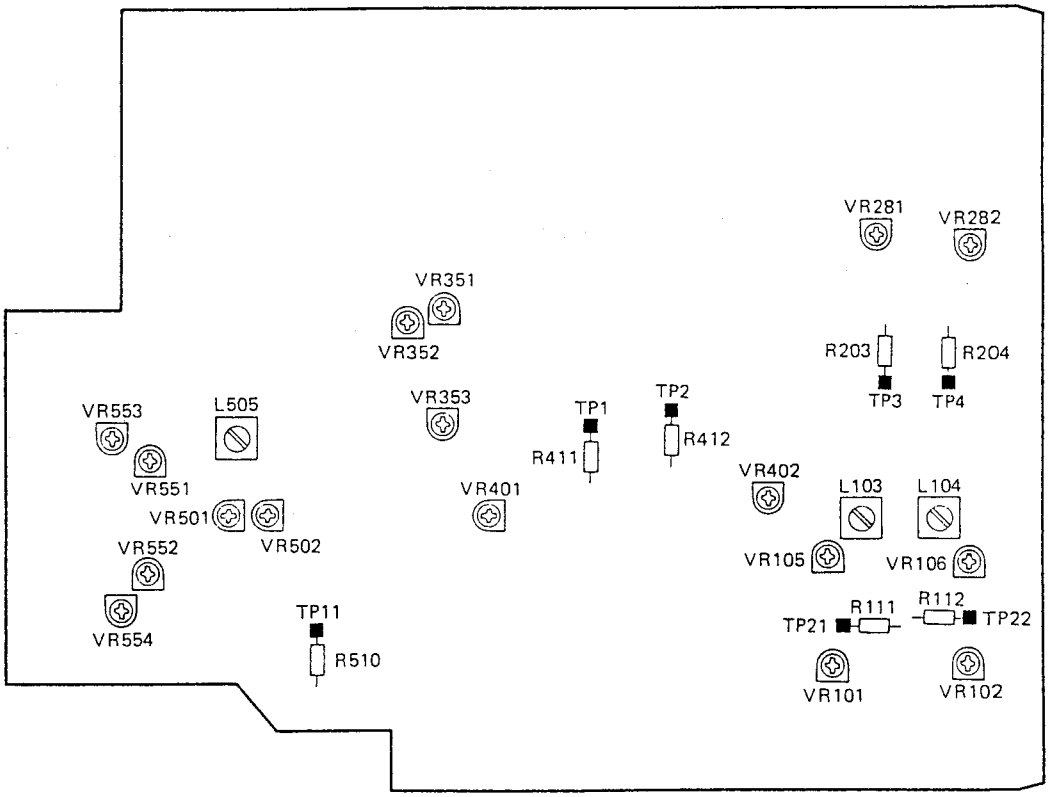

Fig. 6–4 Adjusting points

RECORDING SECTION

1. Bias Oscillator Adjustment

No.	Mode	Input signal & test tape	Adjustment location		Measuring location	Adjustment value	Remarks
1.	REC	Load the STD-610 test tape with no input signal.	Deck	L505	TP. 11	106 kHz ± 300 Hz	

2. Bias Trap Adjustment

No.	Mode	Input signal & test tape	Adjustment location		Measuring location	Adjustment value	Remarks
1.	REC	Load the STD-610 test tape with no input signal.	Deck	L103 (Lch) L104 (Rch)	TP. 3 (Lch) TP. 4 (Rch)	Minimum output	

3. Recording Bias Adjustment

- Turn ON the DOLBY HX PRO switch on the front panel, and set the BIAS control to the center position.

No.	Mode	Input signal & test tape	Adjustment location		Measuring location	Adjustment value	Remarks
1.	REC/ PAUSE	Apply a 315 Hz/-20 dBv (-20VU meter reading) signal to the line input terminals and insert STD-630.			LINE OUT		
2.	REC →PLAY	Record and play back the 315 Hz signal and a 10 kHz signal at -20 dBv input level.	NOR	VR551 (L) VR552 (R)		Record and play back repeatedly, comparing the 315 Hz and 10 kHz playback levels, and adjust to 0 ± 0.5 dB.	
3.		Record the 10 kHz/315 Hz, -20 dBv signal on STD-620 and play back.	CrO2	VR501 (L/R)		0 dBv ± 1.0 dB	
4.		Record the 10 kHz/315 Hz, -20 dBv signal on STD-610 and play back.	METAL	VR502 (L/R)		0 dBv ± 1.0 dB	
5.	Check distortion value after adjustment is completed and confirm that there is no underbias.						
6.	Turn OFF the DOLBY HX PRO switch.						
7.	REC →PLAY	Record and play back the 315 Hz signal and a 10kHz signal at -20 dBv input level.	NOR	VR553 (L) VR554 (R)	LINE OUT	Turn the control fully counterclockwise, and gradually turn to the right to adjust to 0 dB ± 0.5 dB compared when HX-Pro is ON.	Turn control clockwise past the peakto assure proper overbias value.

4. Recording Level Adjustment

- Turn ON the DOLBY NR switch.

No.	Mode	Input signal & test tape	Adjustment location		Measuring location	Adjustment value	Remarks
1.	REC/ PAUSE	Apply the 315 Hz/0 dBv signal to the line input, and load STD-630 (NORM).	REC level control volume		TP. 3 (Lch) TP. 4 (Rch)	-15.2 dBv	
2.	REC →PLAY	Record and play back the 315 Hz/0 dBv signal.	Deck	VR401 (Lch) VR402 (Rch)	TP. 3 (Lch) TP. 4 (Rch)	Repeatedly record, playback and adjust so that the playback signal level becomes -15.2 dB.	Recording bias adjustment and recording level adjustment with STD-630 must be performed accurately asreference for BLE adjustment.
3.	REC →PLAY	Record the 315 Hz/0 dBv signal on STD-620 (CrO2), and play it back.	Check			-15.2 dBv ± 1 dB	
4.	REC →PLAY	Record the 315 Hz/0 dBv signal on STD-610 (METAL), and play it back.	Check			-15.2 dBv ± 1 dB	

5. Level Meter Adjustment

No.	Mode	Input signal & test tape	Adjustment location	Measuring location	Adjustment value	Remarks
1.	REC/ PAUSE	Apply a 315 Hz/–10 dBv (316 mV) signal to the line input terminals.	VR281 (Lch) VR282 (Rch)	TP. 1 (Lch) TP. 2 (Rch)	Always set the enlarged mode when adjusting. Adjust so that the 0 dB segment lights at a level of –15.2 ± 0.5 dBv (–15.2 ± 1.0 dBv in the normal mode).	Adjust by turning clockwise until the lamp lights up.

6. AUTO BLE Adjustment

- BLE Adjustment must be performed after all other adjustments are completed.
- This adjustment should be performed in the test mode.
- Entering the test mode
  Press the MODE (COUNTER), RANGE and MONITOR keys on the front panel simultaneously, with the power ON. The unit enters the test mode and oscillates a 400 Hz signal.
  Thereafter, each time the START/CLEAR key is pressed, the oscillation frequency changes as follows: 3 kHz oscillation → 15 kHz oscillation → Release

No.	Mode	Input signal & test tape	Adjustment location	Measuring location	Adjustment value	Remarks
1.	–	REC LEVEL VR MIN or no signal input.	–	–	–	
2.		Press the three keys MODE (COUNTER), RANGE and MONITOR on the front panel simultaneously.	VR351	Level meter Rch	Adjust so that –3 dB on the level meter lights.	400 Hz adjustment
3.		Press the START/CLEAR key once.	VR352		Adjust so that –1 dB on the level meter lights.	3 kHz adjustment
4.		Press the START/CLEAR key once.	VR353		Adjust so that –1 dB on the level meter lights.	15 kHz adjustment
5.	When the START/CLEAR key is pressed again, the test mode is released.					

7. IC DESCRIPTIONS

7.1 PD4290C

7.1.1 Main CPU Port Arrangement PD4290C (BLE & Main Control)

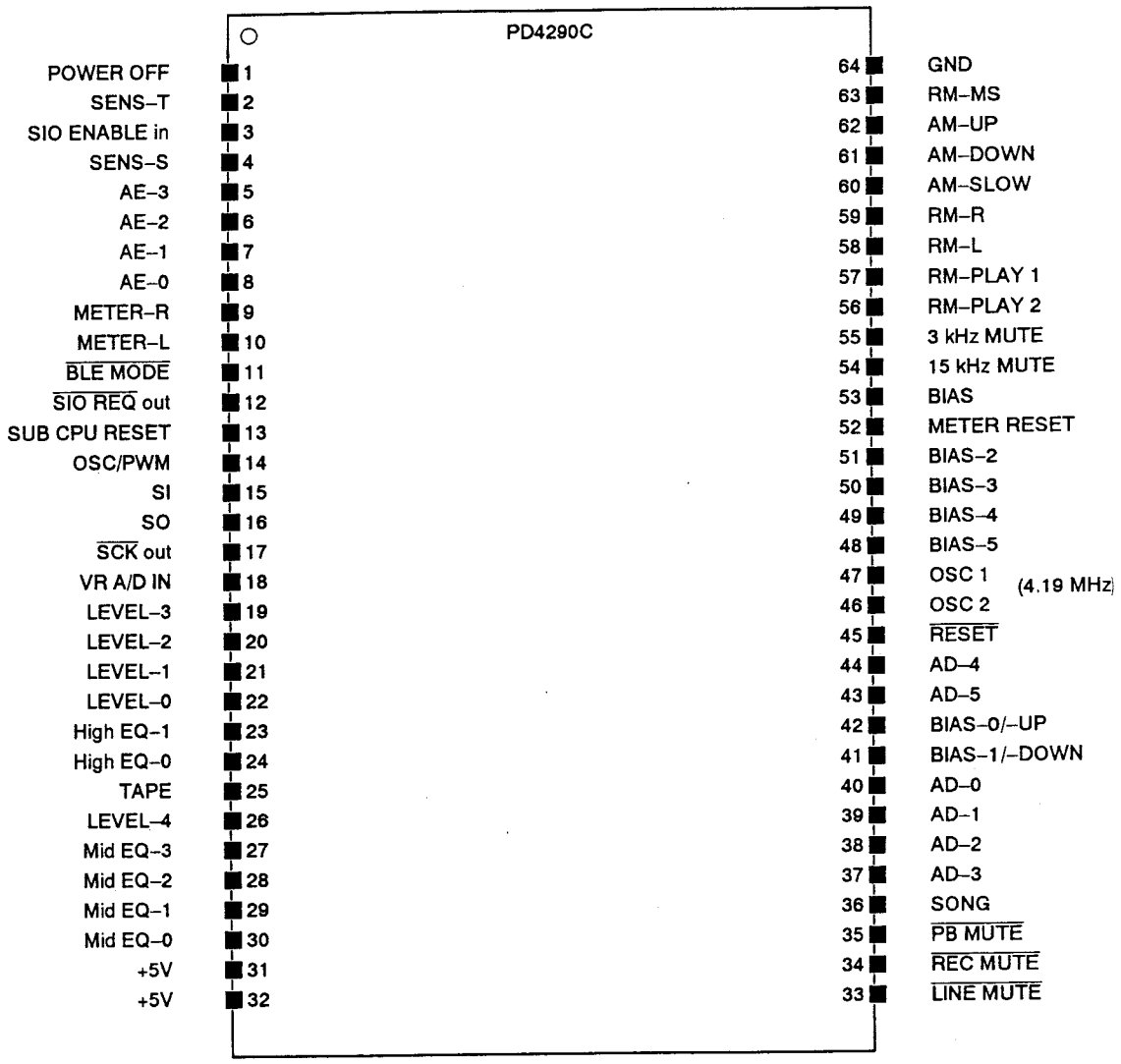

7.1.2 I/O Matrix Table

	CrO_2 (in) (Sub CPU)	METAL (in) (Sub CPU)	High EQ–1 (out) (Main CPU)	High EQ–0 (out) (Main CPU)
TAPE: NORMAL	L	L	1	0
TAPE: CrO_2	H	L	1	0
TAPE: METAL	L	H	0	1

- Output standard value for setting LEVEL (5bit) : 01111
  Mid EQ (4bit) : 0111
  High EQ (2bit) : According to the table above.

7.1.3 PD4290C Pin Functions

Pin No.	I/O	Name	Function
1	I	POWER OFF	POWER OFF trigger input and rising edge input when power is OFF. Normally "L".
2		SENS–T	Rotation pulse input for the take–up side reel base. The tape end is detected when the signal change stops. Also, ATLC operation is based on the signal change.
3		SIO ENABLE in	When this signal from the sub CPU becomes "H", the main CPU starts communication with the sub CPU.
4		SENS–S	Rotation pulse input for the supply side reel base. When Ver REMAIN is ON, the operation for the remain function is performed by this signal. Also, when the signal change stops for 5 minutes with Ver REMAIN ON, PLAY or REC/PLAY mode changes to STOP mode.
5		AE–3	4–bit encoder input for position detection of the mechanism.
6		AE–2	
7		AE–1	
8		AE–0	
9		METER–R	Input of results from comparison of 6–bit output (AD–0 through AD–5) with both R and L channels.
10		METER–L	
11	O	$\overline{\text{BLE MODE}}$	"L" is output during BLE tuning mode and test mode, and "H" is output at other times.
12		$\overline{\text{SIO REQ}}$ out	"L" is output when main CPU requests communication with sub CPU, and "H" is output at other times.
13		SUB CPU RESET	Reset output for resetting of sub CPU when power is turned ON/OFF and when the communication between main CPU and sub CPU is interrupted for a certain duration.
14		OSC/PWM	Tuning oscillator output in BLE mode, and at other times PWM output for position detection of the input volume.
15	I	SI	Serial input for communication with sub CPU.
16	O	SO	Serial output for communication with sub CPU.
17		$\overline{\text{SCK}}$ out	Clock pulse output for communication with sub CPU.
18	I	VR A/D IN	Input of results from comparison of PWM smoothed level signal and position detection level signal of the input volume.
26	O	LEVEL–4	BLE 5–bit LEVEL output.
19		LEVEL–3	
20		LEVEL–2	
21		LEVEL–1	
22		LEVEL–0	
23		High EQ–1	BLE 2–bit High EQ output.
24		High EQ–0	
25		TAPE	Tape monitor output. Tape when "H", source when "L".
27		Mid EQ–3	BLE 4–bit Mid EQ output.
28		Mid EQ–2	
29		Mid EQ–1	
30		Mid EQ–0	
33		$\overline{\text{LINE MUTE}}$	Mute control output for LINE OUT. Muting is ON when "L".
34		$\overline{\text{REC MUTE}}$	Mute control output for recording signal. Muting is ON when "L".
35		$\overline{\text{PB MUTE}}$	Mute control output for playback signal. Muting is ON when "L".

4–bit data	Mechanism mode
0000	PLAY, REC/PLAY
0010	PLAY/PAUSE, REC/PAUSE
0111	CUE, REVIEW
0100	STOP, PAUSE
1101	FF. REW
1001	EJECT

Pin No.	I/O	Name	Function
36	I	SONG	Blank detection signal input. Blank when "L".
43		AD–5	6–bit compensation level signal output for meter A/D.
44		AD–4	
37		AD–3	
38		AD–2	
39		AD–1	
40		AD–0	
41		BIAS–DOWN	Control output for BLE power drive bias volume when Ver VR–BLE is ON. When DOWN is "L" and UP is "H", the volume rotates clockwise and the bias current increases. When DOWN is "H" and UP is "L", the volume rotates counterclockwise and the bias current decreases. The power drive bias volume stops when the output status is "L", "L" or "H", "H".
42		BIAS–UP	
45	I	$\overline{\text{RESET}}$	Reset input for main CPU. Reset when "L"; programming starts when "L" → "H".
48		BIAS–5	Not used when Ver VR–BLE is ON.
49		BIAS–4	
50		BIAS–3	
51		BIAS–2	
52		METER RESET	Used to speed up A/D operation in BLE mode. Meter circuit is discharged when "H".
53		BIAS	Control output for bias ON/OFF during recording. Bias is ON when "H".
54		15 kHz MUTE	Used in accordance with the test signal for BLE tuning. Muting is ON when "H". Both are ON when the signal is 400 Hz. Only 15 kHz MUTE is ON when the signal is 3 kHz. Both are OFF when the signal is 15 kHz.
55		3 kHz MUTE	
56		RM–PLAY 2	For PLAY and REC (L) mode, PLAY torque is lowered only for the first 5 to 15 minutes of tape winding. During tape return and BLE rewind, tape speed is varied using the control lines of PLAY–2, PLAY–1 and MS.
57	O	RM–PLAY 1	
63		RM–MS	
58		RM–L	
59		RM–R	
60		AM–SLOW	Assist motor control output. When DOWN is "L" and UP is "H", the mechanism raises the head base, and when DOWN is "H" and UP is "L" it lowers the head base for ejection of the tape. SLOW output is set to "H" only during the servo operation after one assist motor operation and during the assist motor operation between the EJECT and STOP mode.
61		AM–DOWN	
62		AM–UP	

Mechanism mode	PLAY–2	PLAY–1	MS	L	R
FF	L	L	L	L	H
REW	L	L	L	H	L
CUE	L	L	H	L	H
REVIEW	L	L	H	H	L
PLAY, REC (H)	H	L	L	L	H
PLAY, REC (L)	H	H	L	L	H
STOP, PAUSE, PLAY/PAUSE, REC/PAUSE	–	–	–	H	H

7.2 PD3170A

7.2.1 Sub CPU Port Arrangement PD3170A (Display and Key Input)

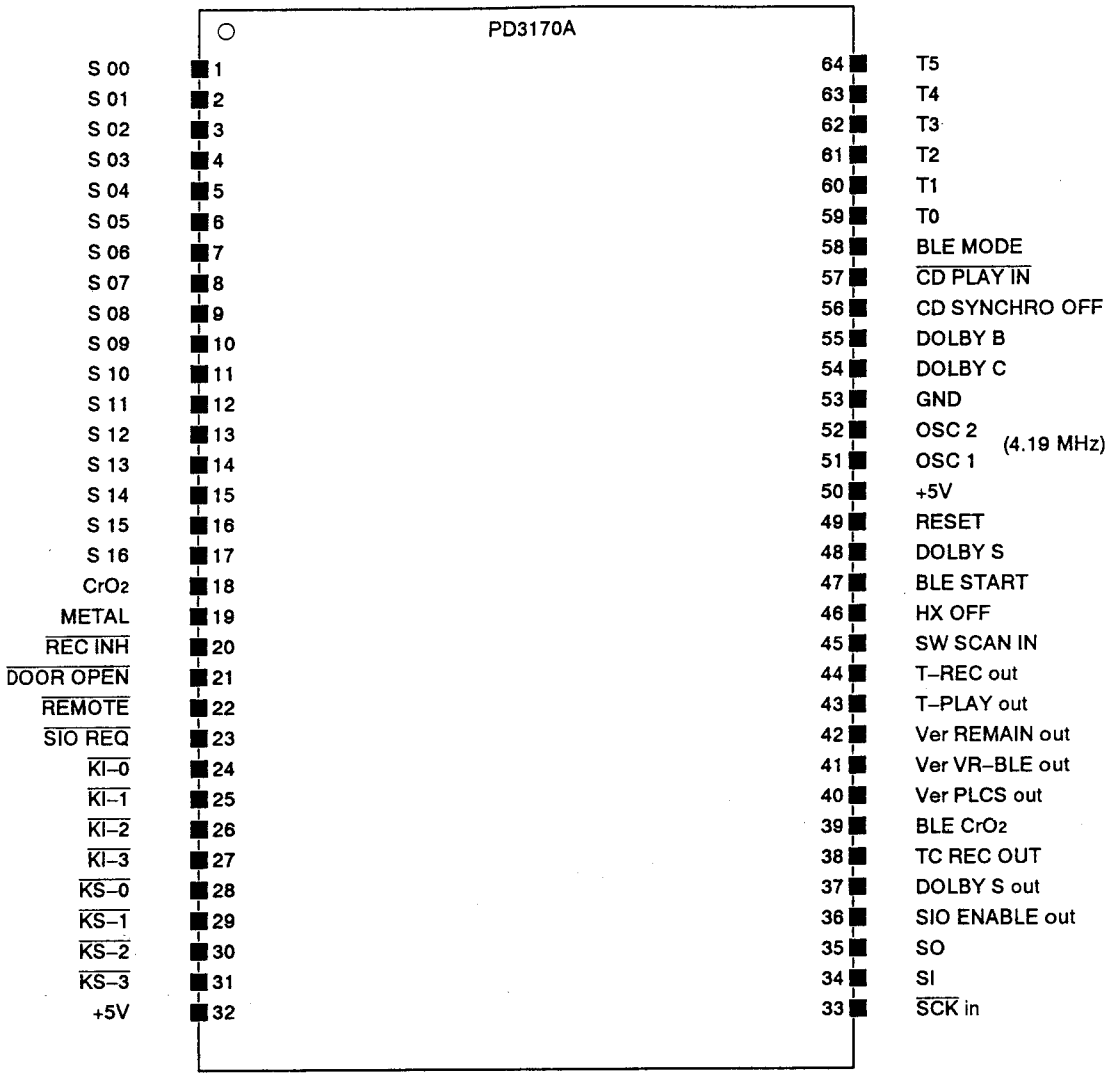

7.2.2 Input Matrix Table

("L" active for all.)

	$\overline{KI3}$	$\overline{KI2}$	$\overline{KI1}$	$\overline{KI0}$	
$\overline{KS3}$	REW	OPEN/CLOSE	STOP	TAPE RETURN	Detection is possible when the scanning is OFF.
$\overline{KS2}$	PLAY	COUNTER MODE	COUNTER RESET/ CAPACITY	DISPLAY	
$\overline{KS1}$	FF	METER RANGE	REC	PEAK MODE	
$\overline{KS0}$	PAUSE	MONITOR	REC MUTE	CD SYNCHRO	

- For the input matrix, a key is ON when 1 port of either KS3 through KS0 is "L", and KI-0, 1, 2, and 3 are "L".
- A switch is ON when 1 port of either T-REC, T-PLAY, Ver REMAIN, Ver VR-BLE or Ver PLCS is "H", and SW SCAN IN is "H". However, the input of these 5 lines is performed for 4 sec. after the power is turned ON, and thereafter only T-PLAY is input except during BLE test mode.

7.2.3 PD3170A Pin Functions

Pin No.	Name	Function
1	S00	S01 through S16 are FL segment outputs.
2	S01	
3	S02	
4	S03	
5	S04	
6	S05	
7	S06	
8	S07	
9	S08	
10	S09	
11	S10	
12	S11	
13	S12	
14	S13	
15	S14	
16	S15	
17	S16	
18	CrO_2	Input for CrO_2 switch for cassette half. Switch is ON when "H".
19	METAL	Input for METAL switch for cassette half. Switch is ON when "H".
20	RECINH	Input for REC protection switch for cassette half. Recording is disabled when "L".
21	DOOR OPEN	Door switch input. Door open when "L".
22	REMOTE	Remote control signal input. Serial communication request input from the main CPU. "L" is output when
23	SIO REQ	communication is requested, and "H" is output at other times.
24	KI3	KI0 through KI3 are key scan return signal inputs. Key is ON when "L".
25	KI2	
26	KI1	
27	KI0	
28	KO3	KO0 through KO3 are key scan signal outputs. "L" is output during scanning.
29	KO2	
30	KO1	
31	KO0	
32	Vcc	Power supply terminal, +5V.

Pin No.	Name	Function
33	SCKIN	Serial communication clock pulse input.
34	SI	Serial communication data input.
35	SO	Serial communication data output.
36	BUSY	Serial communication enable signal output. Communication is enabled when "H".
37	NRSO	Dolby S control signal output. Dolby S is ON when "H".
38	SYNO	PLAY request signal output from the deck to the CD player for CD synchronization. Deck REC state when "H".
39	CREQ	EQ control output during BLE. "H" is output during the BLE tuning with a CrO_2 tape or when AUTO BLE DATA lights.
40	PLCSV	When pins 40 through 44 output "H" and if the result input at 45 is "H", presence of diode and switch ON is detected. PLCS version diode scan output.
41	BLE TYPE	VR-BLE version diode scan output.
42	REMAINV	REMAIN version diode scan output.
43	T-PLAY	Timer PLAY switch scan output.
44	T-REC	Timer REC switch scan output.
45	SW SCAN IN	Switch scan return input. Scanned switch is ON when "H".
46	HXOF	Not used.
47	BLE	BLE start switch input. Switch is ON when "L" → "H".
48	NRSI	Dolby S switch input. Switch is ON when "H".
49	RESET	RESET signal input. Reset when "H"; programming starts when "H" → "L".
50	TEST	Not used. Connected to VCC potential.
51	OSC1	4.19 MHz ceramic resonator is connected between OSC1 and OSC2.
52	OSC2	
53	GND	GND terminal
54	NRCI	Dolby C switch input. Switch is ON when "H".
55	NRBI	Dolby B switch input. Switch is ON when "H".
56	SYOF	Jack connection detection of the CD synchronization cord. No connection when "H".
57	SYNI	PLAY signal input during CD synchronization. CD PLAY when "L".
58	NROFF	Dolby is set to OFF during BLE. Dolby OFF when "H".
59	T0	T0 through T5 are FL grid outputs.
60	T1	
61	T2	
62	T3	
63	T4	
64	T5	

7.3 FL

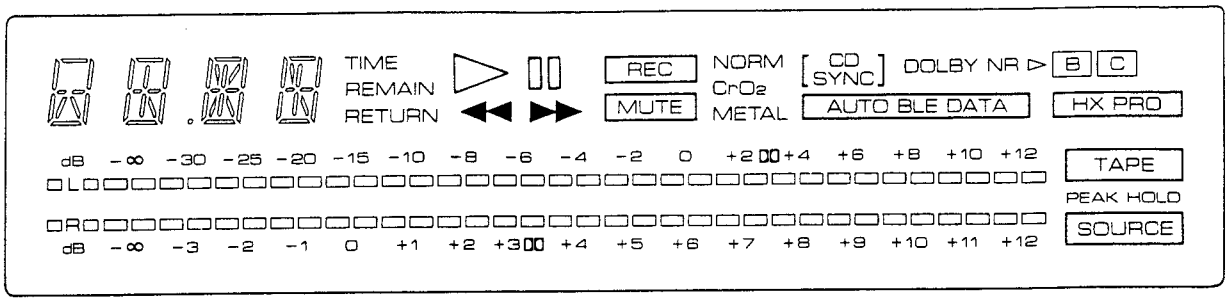

7.3.1 Connection Terminals

TERMINAL No.	1	2	3	4	5	6	7	8	9	10	11	12	13	14	15	16				
ELECTRODE	F	F	NP	NP	(T0)	(T1)	(T2)	(T3)	(T4)	(T5)	(ALL)	(S00)	(S01)	(S02)	(S03)	(S04)				
TERMINAL No.	17	18	19	20	21	22	23	24	25	26	27	28	29	30	31	32	33	34	35	36
ELECTRODE	NP	(S05)	(S06)	(S07)	NP	(S08)	(S09)	(S10)	(S11)	(S12)	(S13)	(S14)	(S15)	NP	NP	(S16)	NP	NP	NP	NP
TERMINAL No.						37	38	39	40	41	42	43	44	45	46	47	48	49	50	51
ELECTRODE						NP	NP	NP	NP	NP	NP	NP	NP	NP	NP	NP	NP	NP	F	F

Notes F : Filament NP: No Pin

7.3.2 FL Matrix Table

	T0	T1	T2	T3	T4	T5
S00	3–a	2–a	1–a	S	L–0	R–0
S01	3–b	2–b	1–b	C	L–1	R–1
S02	3–i+m	2–i	1–i+m	B	L–2	R–2
S03	3–f	2–h	1–h+l	HX PRO	L–3	R–3
S04	3–g+k	2–j	1–k	DOLBY NR ▶	L–4	R–4
S05	3–c	2–f	1–f	(CD SYNC)	L–5	R–5
S06	3–l	2–g	1–g	AUTO BLE DATA	L–6	R–6
S07	3–e	2–k	1–c	NORM	L–7	R–7
S08	3–d	2–c	1–e	CrO_2	L–8	R–8
S09	4–a	2–n	1–d	METAL	L–9	R–9
S10	4–b	2–l	❚❚ (PAUSE)	REC	L–10	R–10
S11	4–f	2–m	▶ (PLAY)	MUTE	L–11	R–11
S12	4–g+k	2–e	TIME	TAPE	L–12	R–12
S13	4–c	2–d	REMAIN	HOLD	L–13	R–13
S14	4–l+n	●	▶▶ (FF)	PEAK	L–14	R–14
S15	4–e		◀◀ (REW)	SOURCE	L–15	R–15
S16	4–d		RETURN		NORMAL RANGE SCALE	EXPAND RANGE SCALE
ALL					–L– – –	–R– – –

- Of the 4 digits of the 7 segment display the leftmost digit is 4–, and the rightmost digit is 1–.

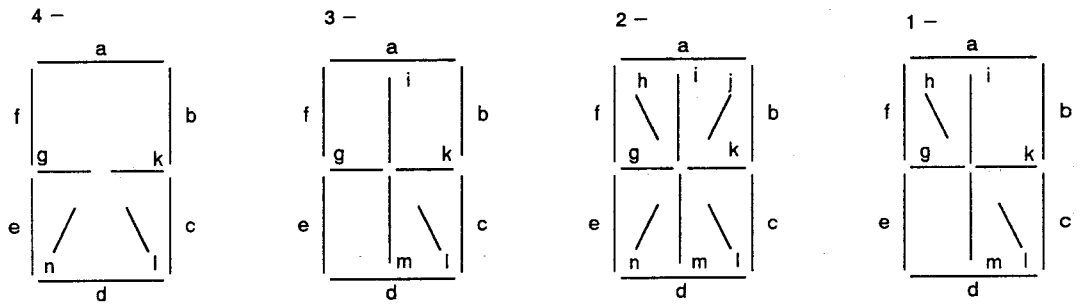

- 7 segment display indications other than numbers are as shown below.

7.3.3 Character Display

Dispaly	Display condition
WAIT	Lights for 4 sec. at POWER ON.
REC	Blinks for 4 sec. with TIMER REC switch ON at POWER ON.
OPEN	Lights for 4 sec. when the mechanism ejects.
CAL	Lights during the BLE tuning operation.
ERR	Blinks when the BLE tuning is not completed.
P– --	The data "00" through "15" light during the skip search operation.
P+ --	
C60	Lights or blinks during detection of tape length, when the counter is set to remain mode, until the results are displayed.
C46L	
C90	
C80L	

8. SPECIFICATIONS

System ..... 4 track, 2-channel stereo
Heads
Recording and playback head:
[CT-93, CT-979]
Laser amorphous playback head and Laser amorphous recording head combination × 1
[CT-900S, CT-777]
Hard permalloy playback head and Hard permalloy recording head combination × 1
Erasing head: Ferrite head with sendust gurd × 1
Motor ..... DC servo capstan motor × 1
DC reel motor × 1
DC auxiliary motor × 1
Wow and Flutter
[CT-93, CT-979] ..... No more than 0.022% (WRMS)
No more than ±0.052% (DIN)
[CT-900S, CT-777] ..... No more than 0.023%(WRMS)
No more than ±0.056% (DIN)
Fast Winding Time ..... Approximately 75 seconds (C-60 tape)

Frequency Response
−20 dB recording:
[CT-93, CT-979]
Metal tape ..... 15 to 22,000 Hz
Chrome tape ..... 15 to 21,000 Hz
Normal tape ..... 15 to 21,000 Hz
Signal-to-Noise Ratio (Dolby NR off)
[CT-93, CT-979] ..... More than 61 dB
Noise Reduction Effect
Dolby B-type NR ON ..... More than 10 dB (at 5 kHz)
Dolby C-type NR ON ..... More than 19 dB (at 5 kHz)
Dolby S-type NR ON (CT-93, CT-900S) .... More than 22 dB (at 5 kHz)
Harmonic Distortion ..... No more than 0.6% (0 dB)
Input (Sensitivity)
LINE (INPUT) ..... 60 mV (Input impedance 47 kΩ)
Output (Reference level)
LINE (OUTPUT) ..... 316 mV (Output impedance 1.8 kΩ)
Headphone ..... 2.3 mW
(Load impedance 8 Ω, PHONES LEVEL control max.)

Subfunctions

- Super AUTO BLE system
- Bias control with motor driven (CT-93, CT-979)
- Dolby HX Pro Headroom Extension system (CT-93, CT-979: on/off possible)
- Dolby S-type noise reduction system (CT-93, CT-900S)
- Dolby B-type and C-type noise reduction systems
- MPX filter
- Level meter with 2 modes peak hold selection (16 + 1 segments)
- Level meter range selection (wide/expanded)
- Peak level calibration system (CT-93, CT-979)
- 4-digit electronic tape counter with mode selection (CT-93, CT-979: Normal/Time/Remain time)
- Auto monitor selection (Tape/Source)
- Display off
- Music search (over ±15 selections)
- Automatic Tape Loose Canceller (ATLC)
- Tape return/Return play
- Auto space recording mute
- Auto tape selector
- Playback/recording timer start function
- CD•DECK SYNCHRO recording
- Headphones jack with level control
- Power eject (Open/Close)
- Repeat playback
- System remote control available (Multi-voltage model of CT-93)

Miscellaneous

Power Requirements
European model ..... AC 220−230 Volts~, 50/60 Hz
U.K. model ..... AC 230−240 Volts~, 50/60 Hz
Multi-voltage model ..... AC 110/120−127/220/240 V (switchable), 50/60 Hz
Power Consumption
[CT-979] 20W
Dimensions
[CT-979, CT-900S, CT-777] ..... 420(W) × 135(H) × 370(D) mm
Weight (without package)
[CT-979] ..... 8.2 kg

Accessories

Operating instructions 1
Connection cord with pin plugs 2
CD•DECK SYNCHRO control cord 1
Remote control cord (Multi-voltage model of CT-93) 1

NOTE:
Specifications and design subject to possible modifications without notice, due to improvements.

9. PANEL FACILITIES

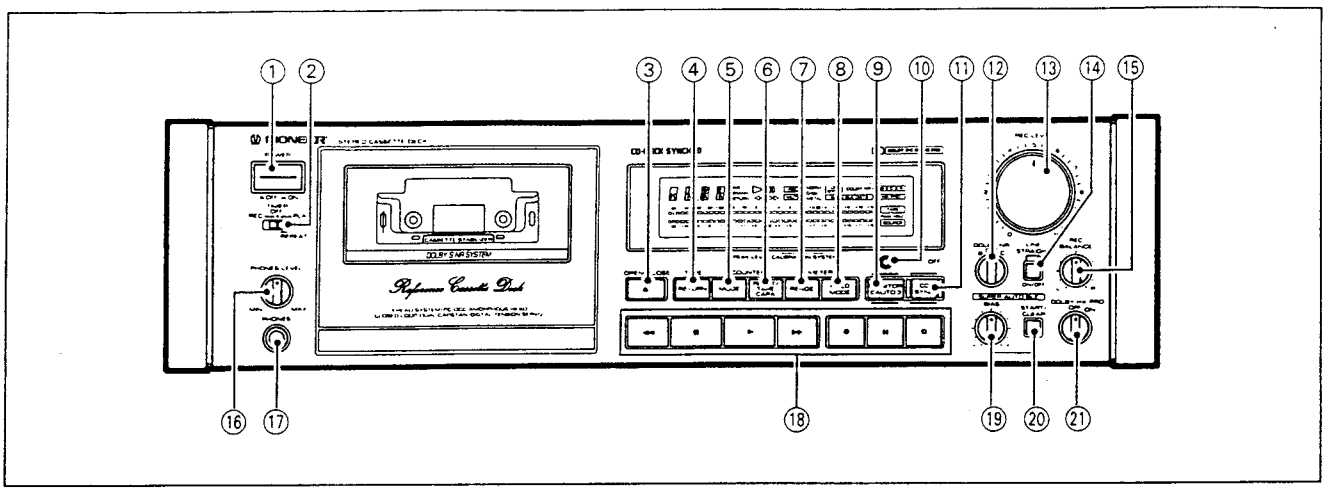

① **Power switch (POWER ■ OFF/ ▬ ON)**

② **Timer mode/repeat play switch (TIMER REC/OFF/PLAY-REPEAT)**

③ **Open/close button (OPEN/CLOSE ⏏)**

Press this button to open or close the cassette door. Whenever inserting or removing a cassette tape, be sure that the power is turned ON.

NOTE:

If the cassette door is closed while the unit is turned OFF, and the power is then turned ON, the cassette door may open and close after pressing one of the operation buttons. This occurs when the microprocessor resets the door mechanism to its initial state and does not indicate any malfunctioning of the unit.

④ **Tape return button (TAPE RETURN)**

This button is used in the normal tape counter mode to fast forward or rewind the tape to a point near the counter reading "0000."

⑤ **Counter mode button (COUNTER MODE) [CT-93, CT-979]**

Each time this button is pressed, one of the three mode (Normal tape counter/Time counter/Remaining time counter) is set in sequence.

⑥ **[CT-93, CT-979] Counter reset/Tape capacity selector button (COUNTER RESET/TAPE CAPA)**

Reset the counter indication to "0000" in the normal tape counter or the time counter mode.

To indicate the correct time value in the remaining time counter mode, this button must be set in accordance with the tape used.

⑦ **Level meter range selector button (METER RANGE)**

Selects wide or expanded range for the level meter.

⑧ **Level meter hold mode button (METER HOLD MODE)**

Selects the display mode of the peak level.

When press this button so that the HOLD indicator lights up, the level meter holds the maximum level indications of the signal. To erase the maximum level indications, press this button again. When the HOLD indicator goes off, the level meter holds peak indications for about 1.2 second.

⑨ **Monitor selector button (MONITOR [AUTO])**

Used to monitor the source sound or just recorded sound during recording.

- When the unit is set to record or playback mode, the TAPE indicator light up and the monitor mode is automatically selected.

⑩ **Display off button (DISPLAY OFF)**

Press this button to turn off the function display.

⑪ **CD•DECK SYNCHRO recording button (CD SYNC)**

⑫ **DOLBY* NR switch**

[CT-979, CT-777]

3-position (B/OFF/C)

*

- *Dolby noise reduction and HX Pro headroom extension manufactured under license from Dolby Laboratories Licensing Corporation. HX Pro originated by Bang & Olufsen.*
- *"DOLBY", the double-D symbol DD and "HX PRO" are trademarks of Dolby Laboratories Licensing Corporation.*

⑬ **Recording level control (REC LEVEL)**

⑭ **[CT-93, CT-979 only] Line straight button/indicator (LINE STRAIGHT)**

When press this button so that the indicator lights up, the signal is passed the REC BALANCE control circuits.

⑮ **Recording balance control (REC BALANCE)**

⑯ **Headphones level control (PHONES LEVEL)**

⑰ **Headphones jack (PHONES)**

⑱ **Operation buttons**

◀◀: Rewind/music search
■ : Stop
▶ : Playback
▶▶: Fast forward/music search
● : Recording
❚❚ : Pause
O : Recording mute

⑲ **[CT-93, CT-979 only] Recording bias control/indicator (BIAS)**

If you desire, you can readjust the recording bias condition after the AUTO BLE tuning.

⑳ **SUPER AUTO BLE button (START/CLEAR)**

㉑ **[CT-93, CT-979 only] DOLBY HX PRO switch (OFF/ON)**