PIONEER
The Art of Entertainment

Service Manual

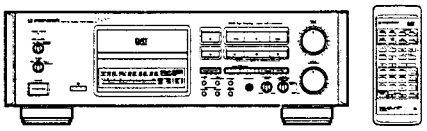

ORDER NO.
ARP2823

DIGITAL AUDIO TAPE DECK

D-07

THIS MANUAL IS APPLICABLE TO THE FOLLOWING MODEL(S) AND TYPE(S).

Type	Model	Power Requirement	The voltage can be converted by the following method.
	D-07		
HEM	○	AC220-230V	AC230-240V, *

*: Alter the wiring of the Power-supply block at the primary winding of Power transformer referring to the "Line Voltage Selection" described in Service Manual.

CONTENTS

1. EXPLODED VIEWS AND PARTS LIST 2
2. PACKING 10
3. SCHEMATIC AND PCB CONNECTION DIAGRAMS 11
4. PCB PARTS LIST 35
5. DISASSEMBLY 40
6. ADJUSTMENTS 41
7. IC INFORMATION 56
8. BLOCK DIAGRAM 78
9. PANEL FACILITIES 79
10. SPECIFICATIONS 81

PIONEER ELECTRONIC CORPORATION 4-1, Meguro 1-Chome, Meguro-ku, Tokyo 153, Japan
PIONEER ELECTRONICS SERVICE INC. P.O. Box 1760, Long Beach, California 90801 U.S.A.
PIONEER ELECTRONICS OF CANADA, INC. 300 Allstate Parkway Markham, Ontario L3R 0P2 Canada
PIONEER ELECTRONIC [EUROPE] N.V. Haven 1087 Keetberglaan 1, 9120 Melsele, Belgium
PIONEER ELECTRONICS AUSTRALIA PTY. LTD. 178-184 Boundary Road, Braeside, Victoria 3195 Australia TEL: (03) 580-9911

DFI AUG. 1993 Printed in Japan

www.hifiengine.com

1. EXPLODED VIEWS AND PARTS LIST

NOTES:

- *Parts marked by "NSP" are generally unavailable because they are not in our Master Spare Parts List.*
- *The ⚠ mark found on some component parts indicates the importance of the safety factor of the part. Therefore, when replacing, be sure to use parts of identical designation.*
- *Parts marked by "◉" are not always kept in stock. Their delivery time may be longer than usual or they may be unavailable.*

1.1 EXTERIOR

Parts List of Exterior

Mark	No.	Description	Parts No.
	1	MAIN UNIT	RWZ3081
	2	HEADPHONE UNIT	RWZ3082
NSP	3	POWER SW UNIT	RWZ3083
	4	CAP PRE-DRIVE UNIT	RWZ3084
	5	AUDIO UNIT	RWZ3085
	6	VR UNIT	RWZ3087
	7	DISPLAY UNIT	RWZ3086
NSP	8	SW UNIT	RWZ3088
	9	POWER UNIT	RWZ3089
	10	TRANS B UNIT	RWZ3090
NSP	11	INPUT SEL UNIT	RWZ3091
NSP	12	LED UNIT	RWZ3092
NSP	13	PLATE (EARTH)	RNE1717
NSP	14	DAT MECHA ASSY	EXK2505
⚠	15	STRAIN RELIEF	CM-22B
⚠	16	AC POWER CORD	PDG1003
⚠	17	FUSE (T2.5AL250V, FU1)	REK-104
⚠	18	POWER TRANSFORMER (T1)	RTT1240
	19	DAMPER PLATE B	PNB1109
	20	SCREW (FE)	RBA1099
	21	SPRING	RBH1143
	22	SPRING	RBH1191
	23	CUSHION	REB1193
	24	DAMPER PLATE C	RNC1070
	25	.....	
	26	GEAR	RNK1289
	27	ARM	RNK1290
	28	ABSORBING MATERIAL A	RNM1049
	29	DOOR PLATE ASSY	RXA1383
	30	SCREW	VBA1028
	31	FOOT	AMR1159
	32	INDICATING LENS	AMR1160
	33	SIDE SPACER	PEB1197
	34	SIDE SHEET	PNM1150
	35	POWER BUTTON	RAC1657
	36	FUNCTION KNOB	RAC1658
	37	SUB FUNCTION KNOB	RAC1740
	38	BALANCE KNOB	RAC1742
	39	SIDE PANEL	RAH1931
	40	FL FILTER (PVC)	RAH2125
	41	DOOR PANEL	RAH2126
	42	FL LENS	RAH2127
	43	SCREW (FE)	RBA1088
	44	DOOR STABILIZER	REB1177
	45	DOOR MOLD	RNK1854
NSP	46	CAUTION SEAL	RRW1079
	47	VR KNOB ASSY (A)	RXA1562
	48	SENSOR WINDOW	VNK1566
	49	.....	
	50	BONNET	REA1017
	51	SCREW	BBT30P060FCC
	52	SCREW	BBT30P080FCC
	53	SCREW	BBT30P100FZK
	54	.....	
	55	SCREW	BBZ26P080FZK
	56	.....	
	57	SCREW	IBZ30P060FCC
	58	SCREW	IBZ30P080FCC
	59	SCREW	IBZ30P100FCC
	60	SCREW	IBZ30P150FCC
	61	SCREW	PMA30P060FCU
	62	NUT	RBN-006
	63	WASHER	WT21D050D050
	64	WASHER	WT21D070D050
	65	.....	
NSP	66	CONNECTOR ASSY 13P (J41)	RKP1518
NSP	67	ANGLE B	PNB1169
NSP	68	TAPE	PNM-044
NSP	69	SPACER (PVC)	REC1078
NSP	70	PCB SPACER	PNY-404
NSP	71	SPACER (A)	REB1057
NSP	72	FL SPACER	REB1171
NSP	73	SPACER (RUBBER)	REB1187
NSP	74	SPACER (RUBBER)	REB1192
	75	.....	
NSP	76	VR SHIELD PLATE (PVC)	REC1162
NSP	77	COVER (PVC)	REC1163
NSP	78	INSULATION SHEET (PVC)	REC1165
NSP	79	MAIN CHASSIS	RNB1042
NSP	80	SHIELD PLATE (FE)	RNB1081
NSP	81	PCB ANGLE A (FE)	RNB1083
NSP	82	MECHA STAY (FE)	RNC1065
NSP	83	SHIELD ANGLE A (FE)	RNC1066
NSP	84	SHIELD ANGLE B (FE)	RNC1067
NSP	85	PS HOLDER	RNE1185
NSP	86	PCB BASE	RNE1221
NSP	87	PCB HOLDER	RNE1330
NSP	88	DOOR STOPPER	RNK1855
NSP	89	STUD	RNL-792
NSP	90	PANEL STAY	RNT1149
NSP	91	PLATE (EARTH)	VNE1164
NSP	92	CASSETTE INSTALLATION UNIT	RXA1470
NSP	93	LEAD WIRE UNIT (EARTH)	XDF-506
NSP	94	REAR PANEL (FE)	RNA1752
NSP	95	BINDER	PEC-107
	96	NAME PLATE	PAN1262
NSP	97	FRONT PANEL (AL)	RAH2343
NSP	98	WIRE CLAMPER	PEC-097
	99	.....	
NSP	100	TRANS A BOARD	RNZ2545

www.hifiengine.com

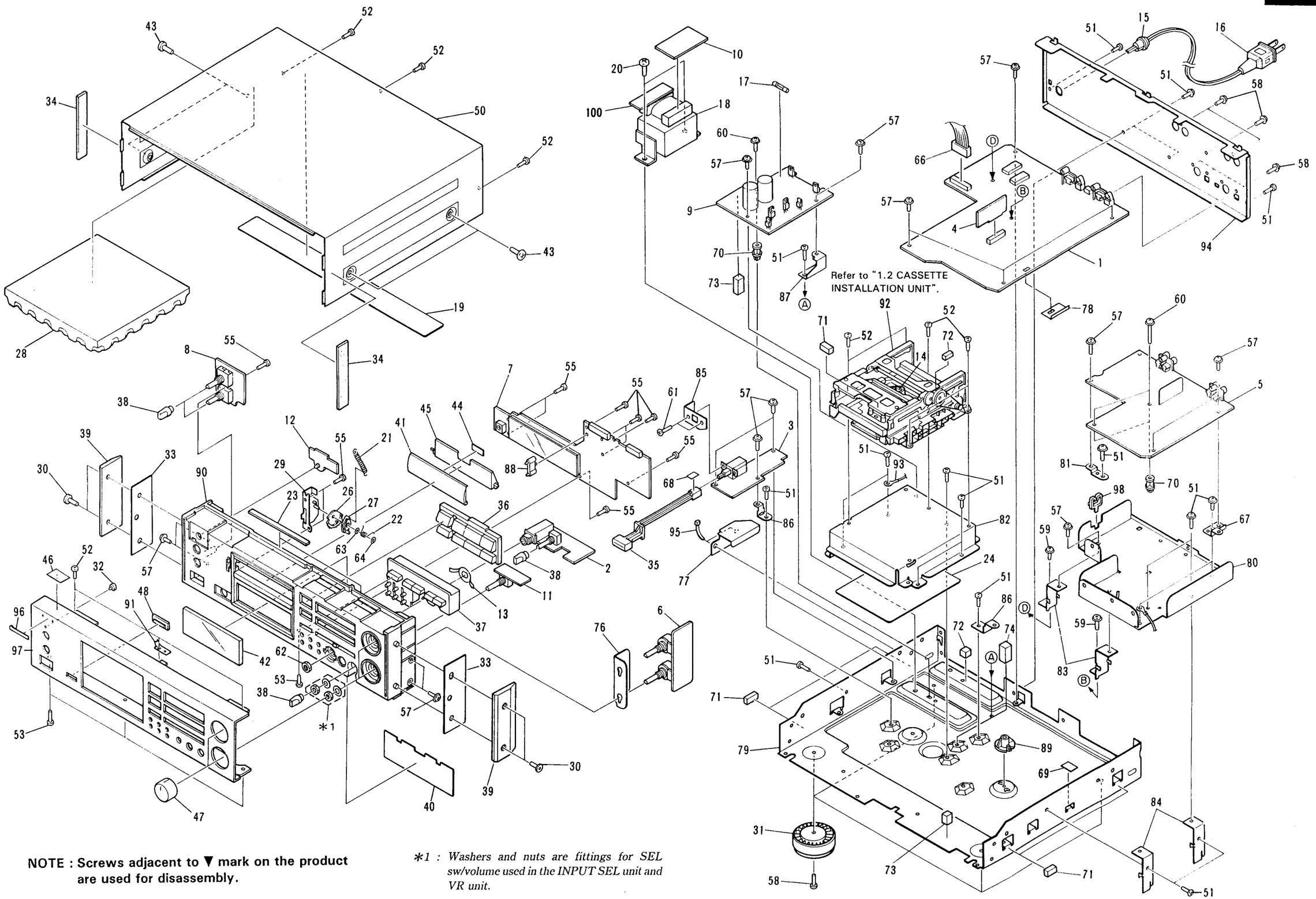

NOTE : Screws adjacent to ▼ mark on the product are used for disassembly.

*1 : *Washers and nuts are fittings for SEL sw/volume used in the INPUT SEL unit and VR unit.*

1.2 CASSETTE INSTALLATION UNIT

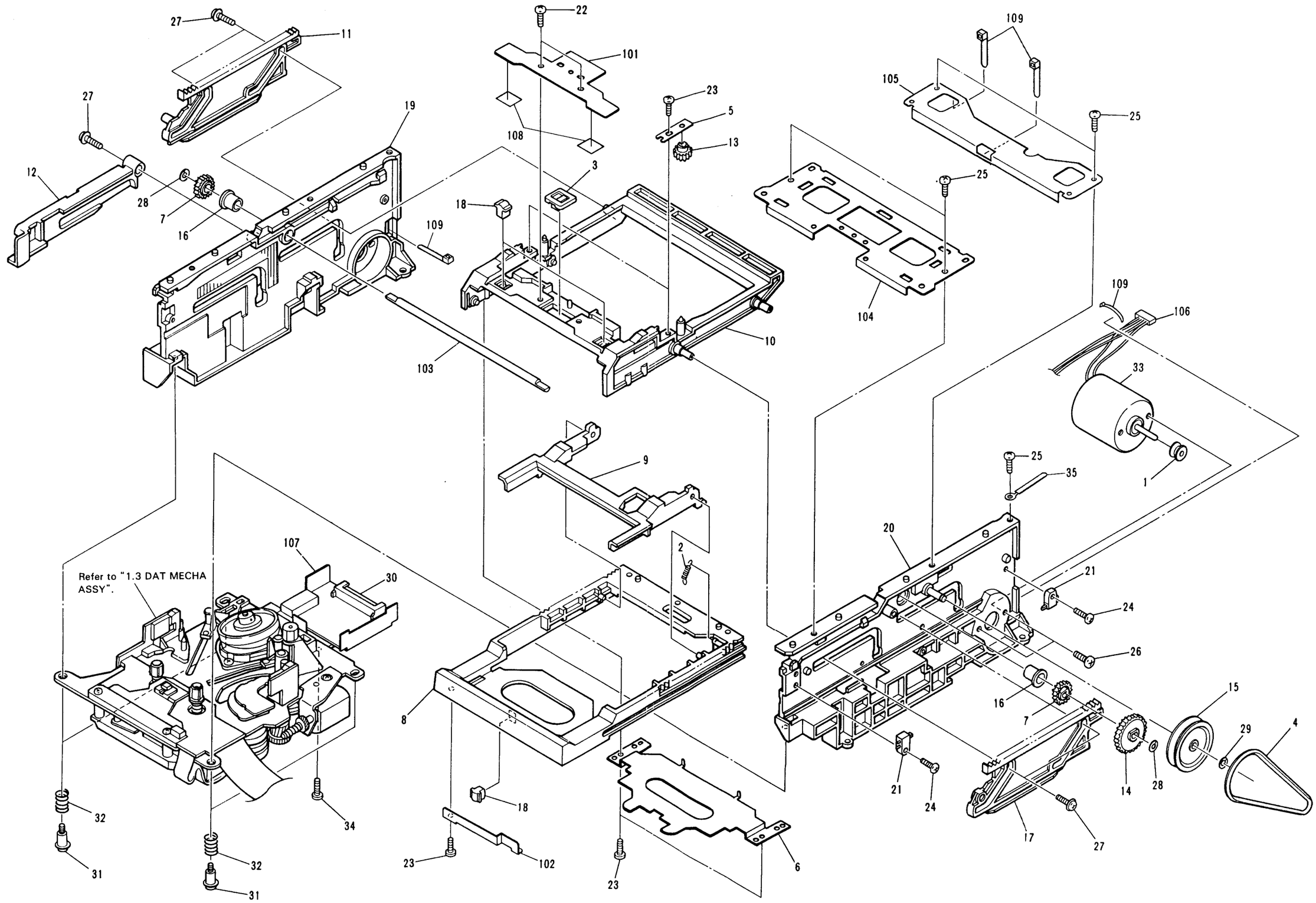

Parts List of Cassette Installation Unit

Mark	No.	Description	Parts No.
	1	MOTOR PULLEY	PNW1634
	2	SPRING	RBH1279
	3	HALF DAMPER	REB1033
	4	BELT	REB1140
	5	GEAR STOPPER	RNE1394
	6	CONTAINER PLATE	RNE1395
	7	GEAR	RNK1272
	8	TRAY	RNK1876
	9	FLAP	RNK1649
	10	CONTAINER	RNK1650
	11	MAIN RACK PLATE L	RNK1653
	12	LEVER	RNK1657
	13	GEAR	RNK1658
	14	GEAR A	RNK1659
	15	PULLEY GEAR	RNK1660
	16	COLLAR	RNK1661
	17	MAIN RACK PLATE R	RNK1664
	18	HALF HOLDER	RNK1711
	19	SIDE PLATE L ASSY	RXA1356
	20	SIDE PLATE R ASSY	RXA1357
	21	PUSH SWITCH (S2001, S2002)	RSF1008
	22	SCREW	BBZ20P040FMC
	23	SCREW	BBZ20P060FZK
	24	SCREW	BBZ20P080FMC
	25	SCREW	BBZ26P060FMC
	26	SCREW	BMZ30P040FMC
	27	SCREW	PBA1035
	28	WASHER	WT21D050D025
	29	WASHER	WT26D047D050
	30	RF UNIT	RWX1076
	31	SCREW	PBA1002
	32	SPRING	RBH1125
	33	LOADING MOTOR	VXM1034
	34	SCREW	BMZ20P040FMC
	35	CORD CLAMPER	RNH−184

Mark	No.	Description	Parts No.
NSP	101	SPRING	RBK1035
NSP	102	SPRING (TRAY)	RBK1036
NSP	103	SHAFT	RLA1152
NSP	104	TOP PLATE	RNE1396
NSP	105	REAR STAY	RNE1397
NSP	106	CONNECTOR ASSY 6P	RKP1433
NSP	107	SHIELD CASE (LOWER)	RNE1566
NSP	108	TAPE	PNM1017
NSP	109	BINDER	PEC−107

www.hifiengine.com

1.3 DAT MECHA ASSY

Parts List of DAT Mecha Assy

Mark	No.	Description	Parts No.
	1	CLAMPER	HEF−102
	2	SWITCH (S102)	ESG9001
NSP	3	CONNECTOR (J8)	EDF9002
	4	SWITCH (S101)	ESG1001
	5	ENCODER ASSY	ESX1001
	6	POWER MOTOR	CXM1020
	7	SOLENOID	EXP1007
	8	PHOTO REFLECTOR (Q102) (REEL SENSOR)	GP2S04
	9	PHOTO REFLECTOR ASSY (Q103) (END SENSOR)	EXX1023
	10	PHOTO REFLECTOR ASSY (Q104) (TOP SENSOR)	EXX1022
	11	RESISTOR (R101)	RD1/4PM431J
	12	DRUM ASSY	EXH9004
	13	BRACKET L ASSY	EXA1117
	14	PINCH ARM ASSY	EXA1118
	15	PINCH DRIVE ARM ASSY	EXA1119
	16	TR ARM ASSY	EXA1122
	17	DRIVE GEAR ASSY	EXA1123
	18	SWING ARM ASSY	EXA1124
	19	REEL BASE ASSY	EXA1125
	20	ROLLER GUIDE	EXA1129
	21	TR ARM BRACKET ASSY	EXA1184
	22	TR BAND ASSY	EXA1185
	23	SLIDER PLATE	ENE1006
	24	SENSOR BRACKET R	ENV1236
	25	STABILIZER	ENV1192
	26	TR LEVER	ENV1194
	27	TR BRAKE	ENV1195
	28	PULL ARM	ENV1197
	29	REEL GEAR	ENV1251
	30	REEL HUB	ENV1252
	31	IDLER GEAR	ENV1253
	32	CLUTCH DRUM	ENV1254
	33	PULLEY GEAR	ENV1255
	34	CHANGE ARM	ENV1256
	35	BRAKE LEVER	ENV1257
	36	BRAKE PLATE	ENV1258
	37	CHANGE LEVER	ENV1259
	38	REV BRAKE	ENV1260
	39	MOTOR GEAR	ENV1231
	40	WORM GEAR	ENV1232
	41	WORM WHEEL	ENV1233
	42	DRIVE GEAR	ENV1234
	43	CAM	ENV1235
	44	INTERVAL GEAR	ENV1238
	45	MODE PLATE	ENV1239
	46	HARD BRAKE	ENV1240
	47	DRIVE ARM	ENV1241
	48	THREADING GEAR	ENV1242
	49	THREADING ARM L	ENV1243
	50	THREADING ARM R	ENV1244
	51	THREADING LINK L	ENV1245
	52	THREADING LINK R	ENV1246
	53	SLIDER L	ENV1247
	54	SLIDER R	ENV1248
	55	PINCH ROLLER	ENT1016
	56	BELT	ENT1017
	57	PULL GUIDE FLANGE	ELA2025
	58	TAPE GUIDE	ELA2022
	59	EARTH SPRING	EBL1004
	60	REEL WASHER	EBF1014
	61	SENSOR SHEET	EEF1001
	62	BRAKE FELT	ENM1019
	63	DAMPER	ENT1021
	64	TAPE GUIDE	ENV1282
	65	BRAKE SHOE	ENT1022
	66	CAPSTAN DD UNIT	EXH9002
	67	PINCH-ARM SPRING	EBH1236
	68	TR ARM SPRING	EBH1237
	69	PULL-GUIDE SPRING	EBH1222
	70	SPRING	EBH1223
	71	TR BRAKE SPRING	EBH1224
	72	IDLER GEAR SPRING	EBH1226
	73	REEL HUB SPRING	EBH1227
	74	BRAKE PLATE SPRING	EBH1228
	75	BRAKE LEVER SPRING	EBH1229
	76	REV BRAKE SPRING	EBH1382
	77	CHANGE ARM SPRING	EBH1231
	78	DRIVE ARM SPRING	EBH1232
	79	HARD BRAKE SPRING	EBH1233
	80	THREADING ARM SPRING (L)	EBH1238
	81	THREADING ARM SPRING (R)	EBH1239
	82	SCREW	BBZ20P060FZK
	83	SCREW	BMZ20P040FMC
	84	SCREW	PMS20P025FMC
	85	SCREW	JGZ20P030FMC
	86	WASHER	WT16D040D050
	87	WASHER	WT16D032D025
	88	WASHER	WT10D035D025
	89	WASHER	WA16D032D025
	90	WASHER	WA16D032D013
	91	WASHER	WA20D040D050
	92	SCREW	EBA1025
	93	PHOTO REFLECTOR (Q101) (REEL SENSOR)	GP2S24C
NSP	101	JUMPER WIRE 5P (J101)	EDD1004
NSP	102	CONNECTOR ASSY 5P (J6)	EDE1011
NSP	103	LEAD CARD 13P (J5)	EDD1006
NSP	104	REEL SENSOR BOARD	ENP1027
NSP	105	CHASSIS ASSY	EXA1183
NSP	106	MOTOR BRACKET ASSY	EXA1130
NSP	107	DRIVE LEVER	ENR1014

www.hifiengine.com

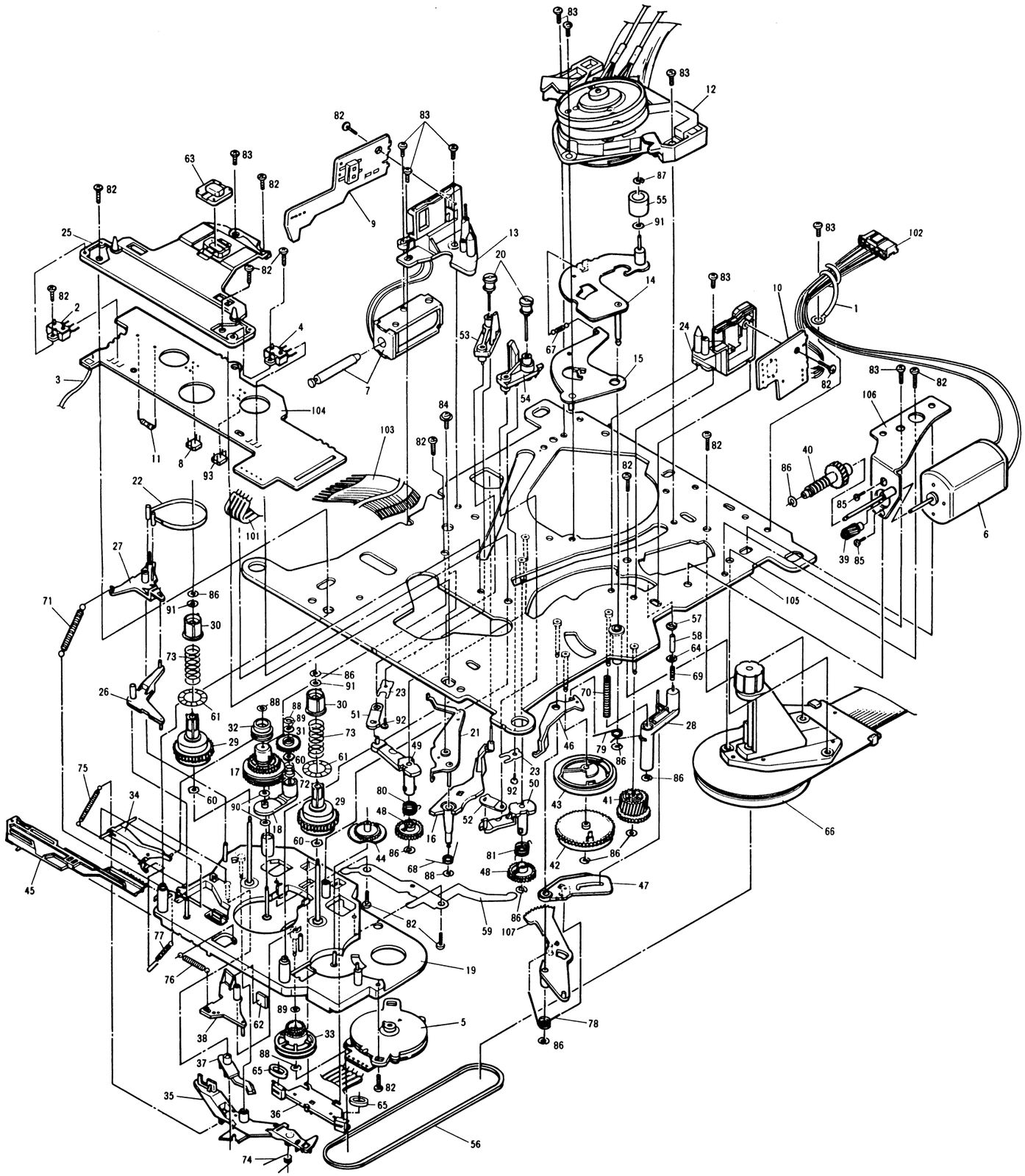

2. PACKING

NOTES :

- *Parts marked by "NSP" are generally unavailable because they are not in our Master Spare Parts List.*
- *The ⚠ mark found on some component parts indicates the importance of the safety factor of the part. Therefore, when replacing, be sure to use parts of identical designation.*
- *Parts marked by "◉" are not always kept in stock. Their delivery time may be longer than usual or they may be unavailable.*

Parts List of Packing

Mark	No.	Description	Parts No.
	1	PACKING CASE	RHG1510
	2	PAD (F)	RHA1073
	3	PAD (R)	RHA1074
	4	OPERATING INSTRUCTIONS (Dutch/Swedish/Spanish/Danish)	RRD1142
	5	REMOTE CONTROL UNIT	RPX1061
	6	.....	
NSP	7	BATTERY (R03, AAA)	VEM−022
	8	INSTRUCTION MANUAL (English/French/German/Italian)	RRE1080
	9	BATTERY LID	PZN1009
	10	SHEET	RHX1007
	11	CONNECTION CORD ASSY	RDE1002
	12	CONNECTION CORD ASSY	RDE1036
NSP	13	WARRANTY CARD	ARW−088

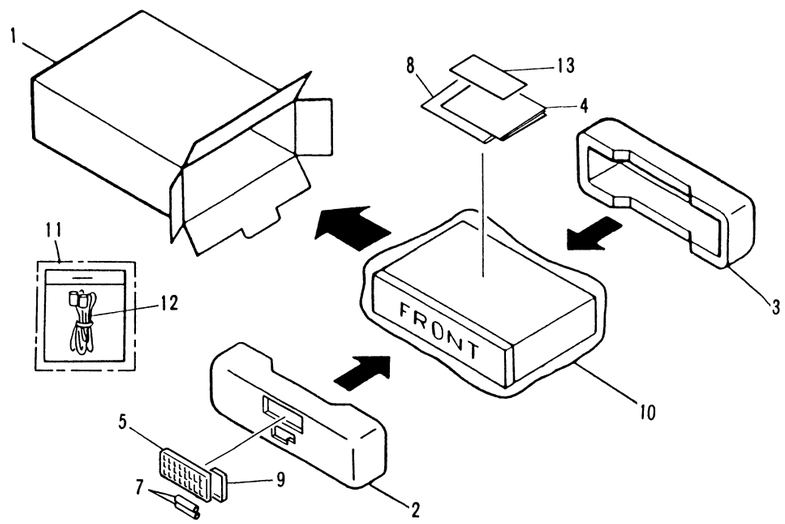

3. SCHEMATIC AND PCB CONNECTION DIAGRAMS

3.1 OVERALL SCHEMATIC DIAGRAM

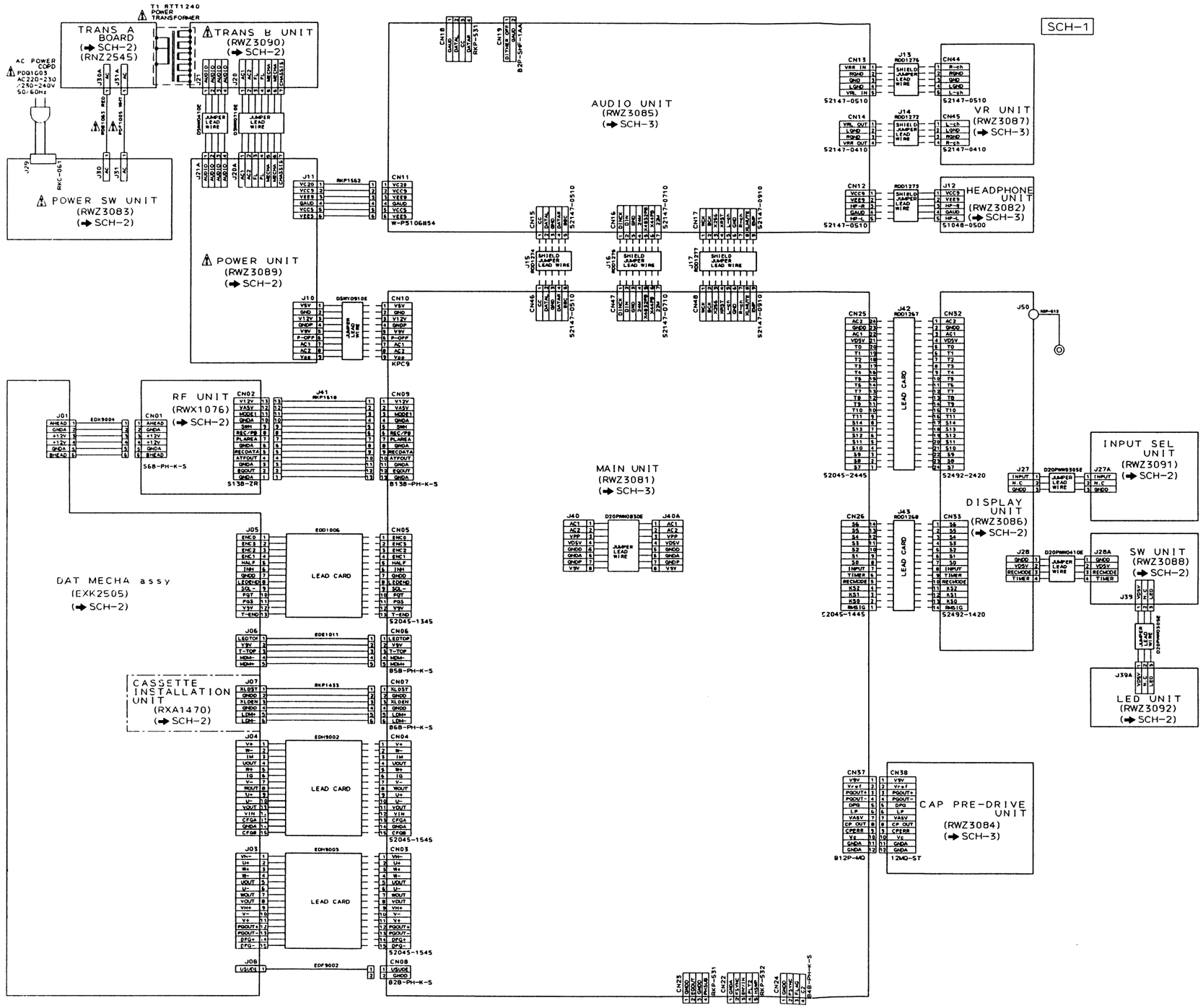

NOTE FOR SCHEMATIC DIAGRAMS (Type 6A)

1. **When ordering service parts, be sure to refer to "PARTS LIST of EXPLODED VIEWS" or "PCB PARTS LIST".**
2. **Since these are basic circuits, some parts of them or the values of some components may be changed for improvement.**
3. **RESISTORS:**
   Unit: k:kΩ, M:MΩ, or Ω unless otherwise noted.
   Rated power: 1/4W, 1/6W, 1/8W, 1/10W unless otherwise noted.
   Tolerance: (F): ±1%, (G): ±2%, (K): ±10%, (M): ±20% or ±5% unless otherwise noted.
4. **CAPACITORS:**
   Unit: p:pF or μF unless otherwise noted.
   Ratings: capacitor (μF)/ voltage (V) unless otherwise noted.
   Rated voltage: 50V except for electrolytic capacitors.
5. **COILS:**
   Unit: m:mH or μH unless otherwise noted.
6. **VOLTAGE AND CURRENT:**
   ▭ or ← V :
   DC voltage (V) in STOP mode unless otherwise noted.
   ⇦ mA or ← mA :
   DC current in STOP mode unless otherwise noted.
7. **OTHERS:**
   - ⊘ or ⊘ : Adjusting point.
   - : Measurement point.
   - The ⚠ mark found on some component parts indicates the importance of the safety factor of the parts. Therefore, when replacing, be sure to use parts of identical designation.
8. **SCH-□ ON THE SCHEMATIC DIAGRAM:**
   - SCH-□ indicates the drawing number of the schematic diagram. (SCH stands for schematic diagram.)
9. **SWITCHES** (Underline indicates switch position):

MAIN UNIT
S501 DEGITAL OUT ON−OFF

DISPLAY UNIT
S1601 MUTE
S1602 ENTER
S1603 ID MODE
S1604 FF
S1605 PLAY
S1606 PAUSE
S1607 MS +
S1608 MS −
S1609 FADER
S1610 CHARACTER
S1611 REW
S1612 REC
S1613 TOC RENUMBER
S1614 PEAK RESET
S1615 COUNTER RESET
S1616 COUNTER MODE
S1617 AUTO ID
S1618 STOP
S1619 O/C

SW UNIT
S1701 REC MODE LP−SP−WIDE
S1702 TIMER
REC−OFF−PLAY REPEAT

POWER SW UNIT
S1201 POWER

INPUT SEL UNIT
S1801 INPUT SELECTOR
ANALOG−COAX−OPT

OVERALL SCHEMATIC DIAGRAM SCH−1

- This diagram is viewed from the foil side.

This PCB connection diagram is view

- This diagram is viewed from the gray colored foil side.
- This is a multi-layer PCB.
  But information for both sides is shown.

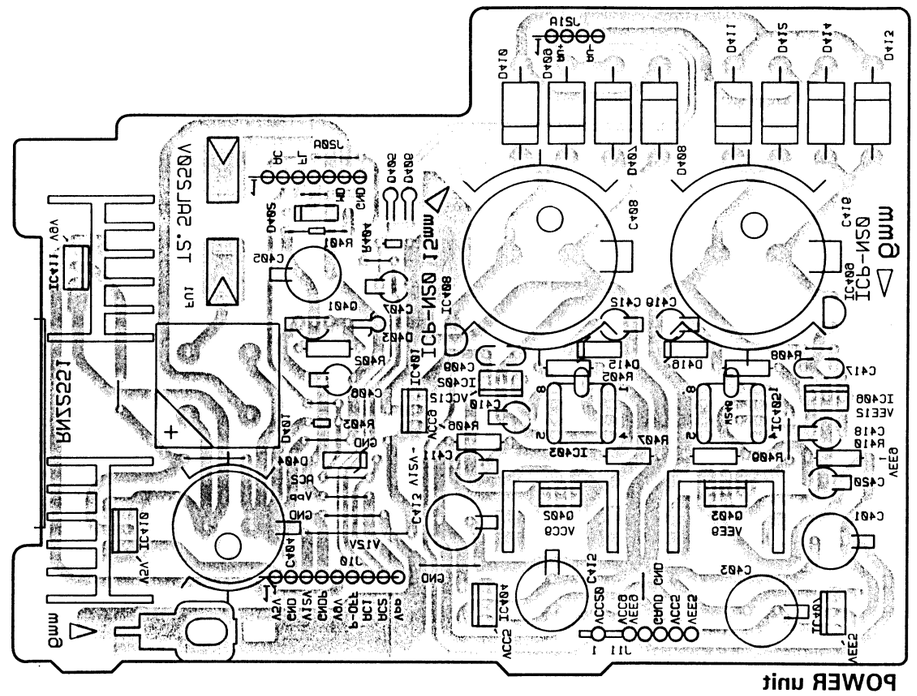

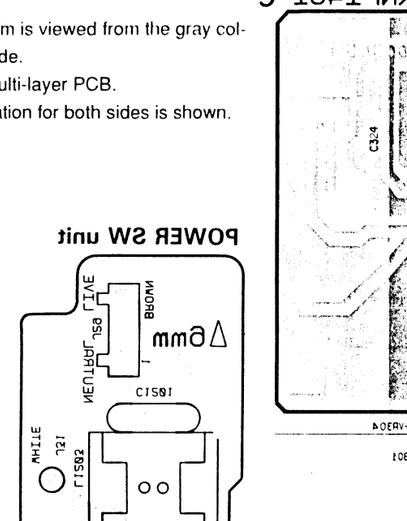

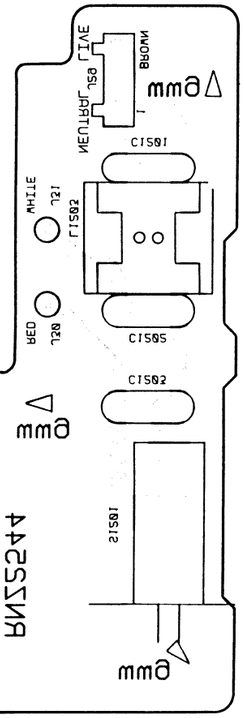

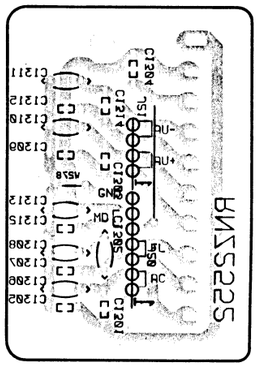

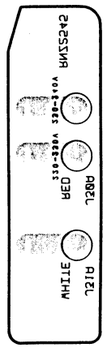

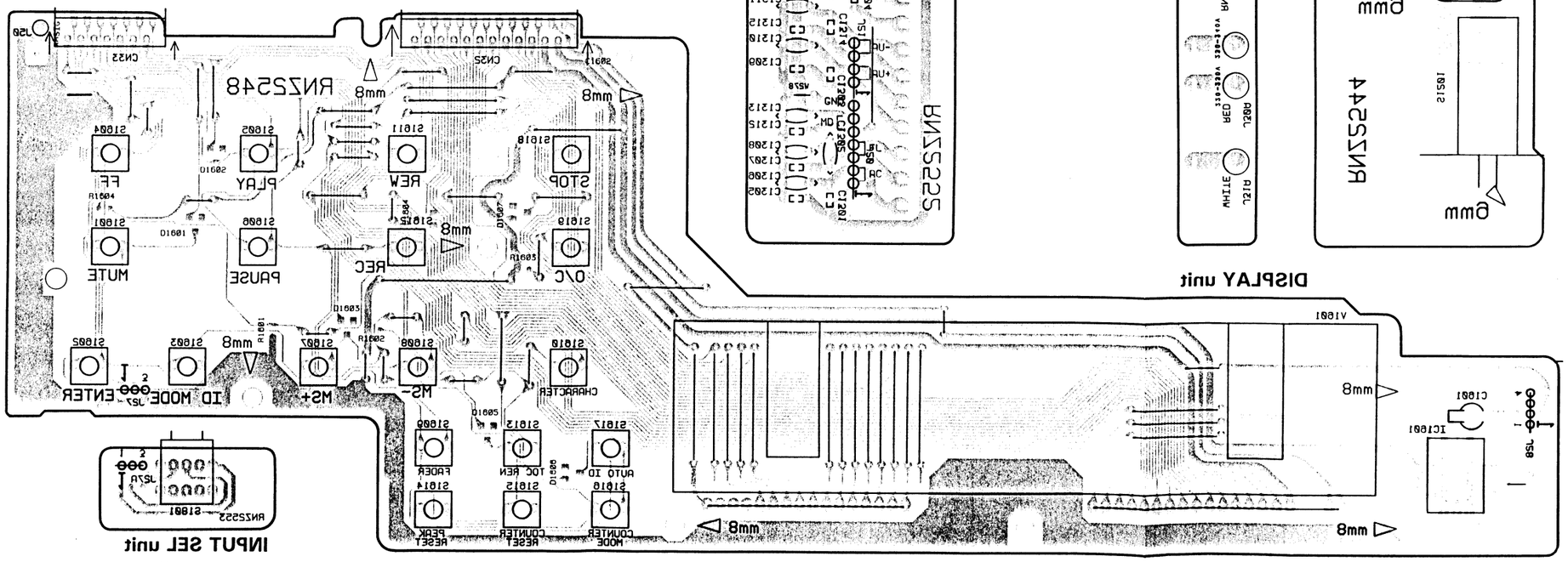

3.2 DAT MECHA Assy, RF UNIT, DISPLAY UNIT, SW UNIT, LED UNIT, INPUT SEL UNIT, POWER UNIT, POWER SW UNIT, TRANS B UNIT AND TRANS A BOARD

This PCB connection diagram is viewed from the foil side.

- This diagram is viewed from the gray colored foil side.
- This is a multi-layer PCB.
  But information for both sides is shown.

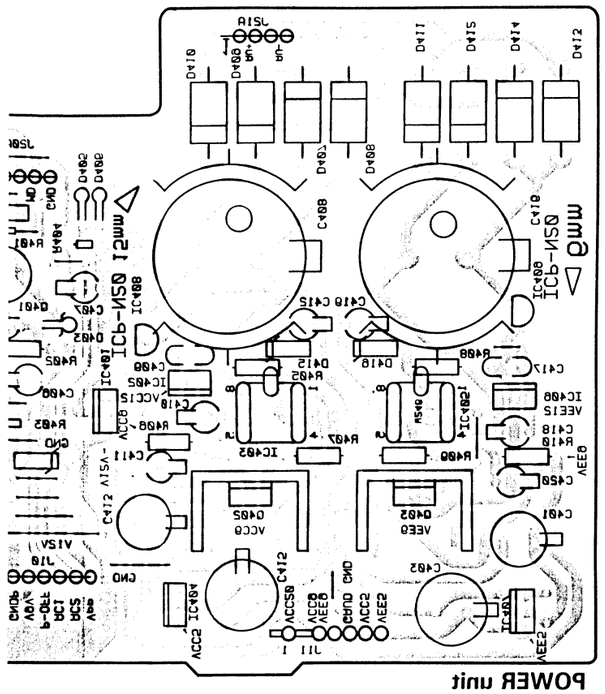

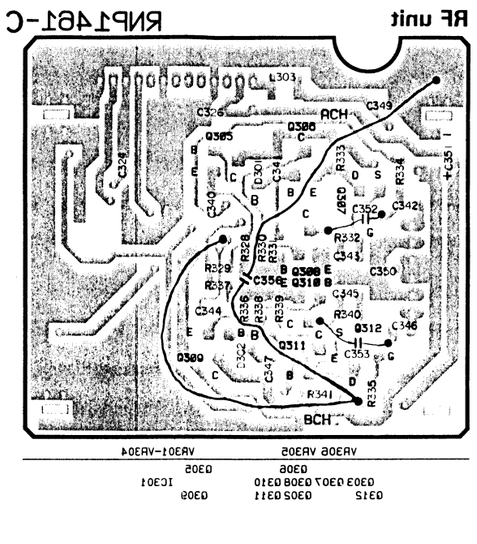

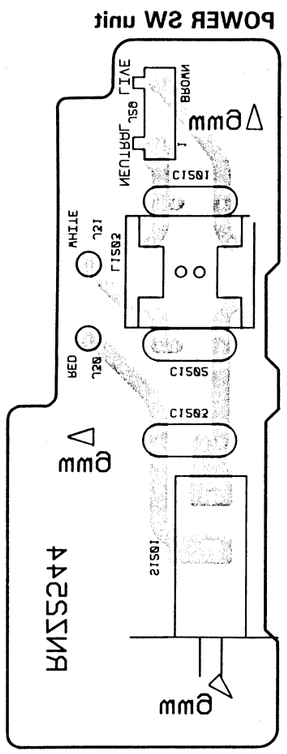

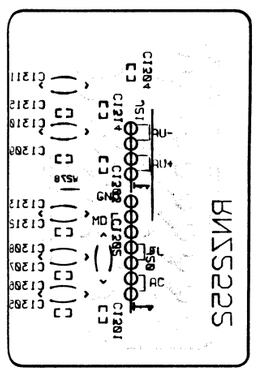

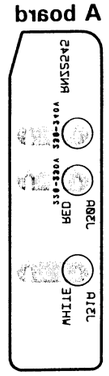

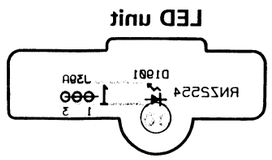

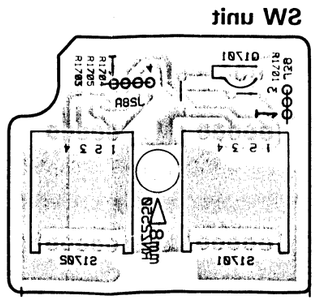

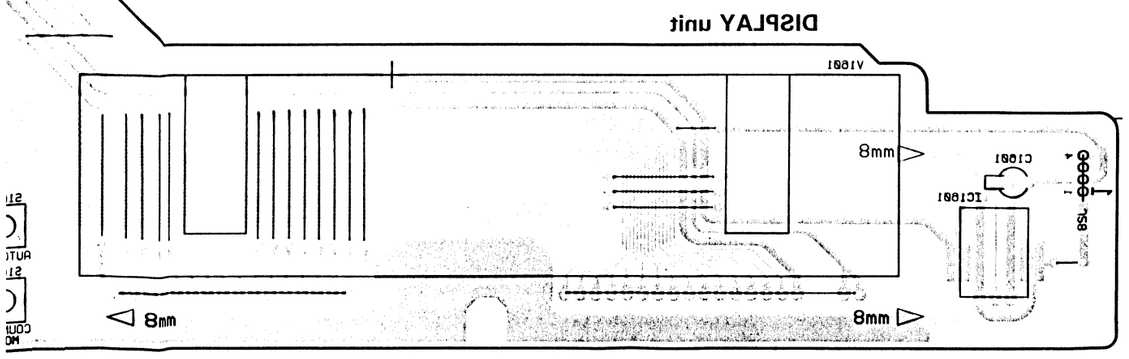

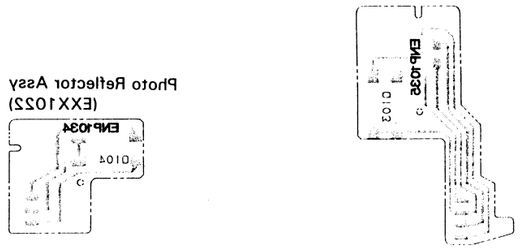

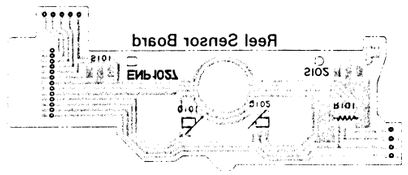

3.2 DAT MECHA Assy, RF UNIT, DISPLAY UNIT, SW UNIT, LED UNIT, INPUT SEL UNIT, POWER UNIT, POWER SW UNIT, TRANS B UNIT AND TRANS A BOARD

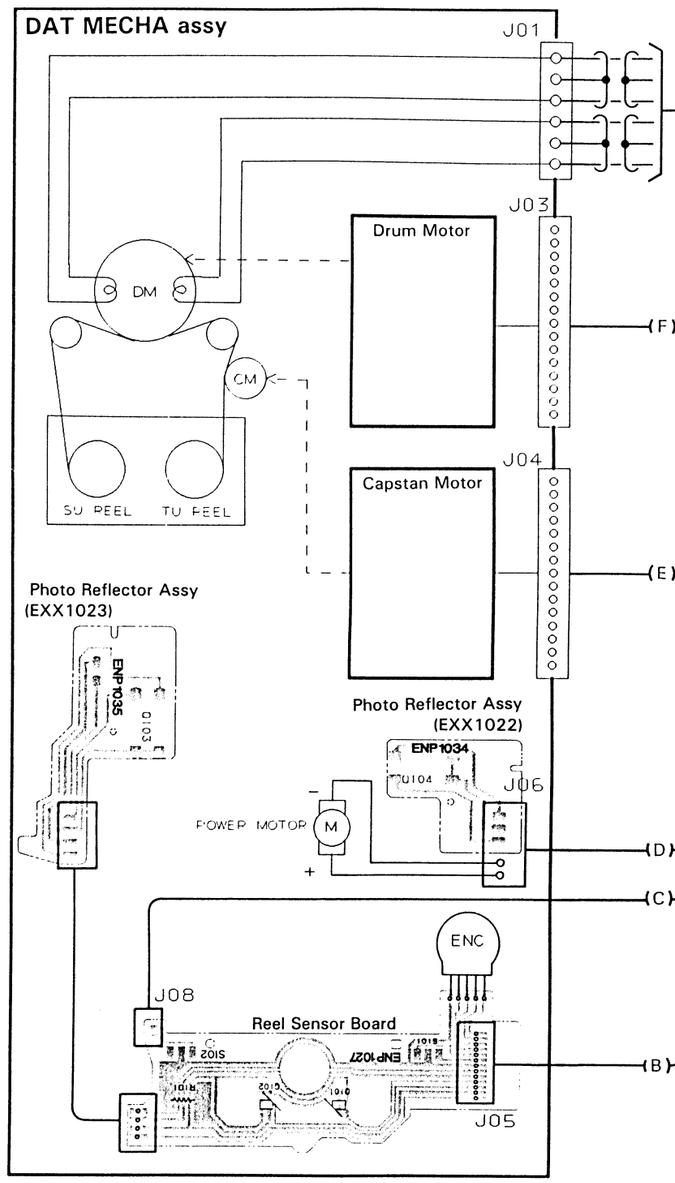

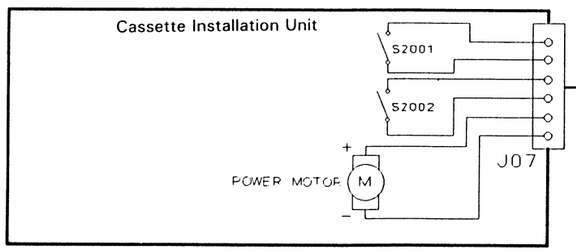

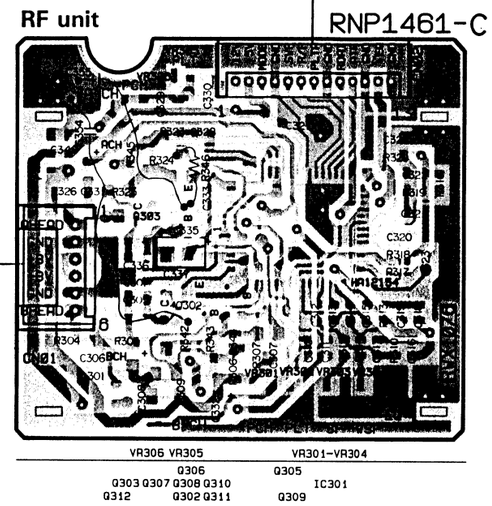

- This diagram is viewed from the pink colored foil side.
- This is a multi-layer PCB.
  But information for both sides is shown.

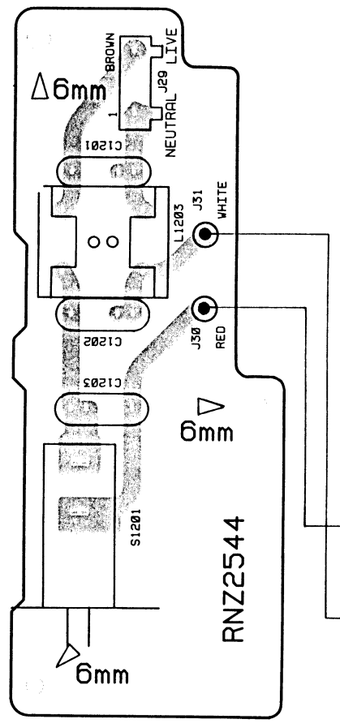

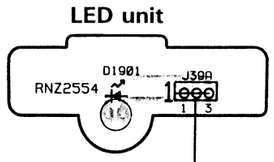

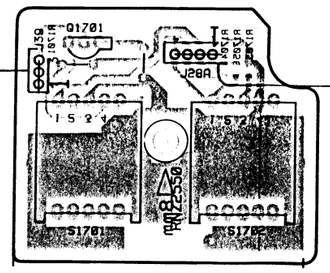

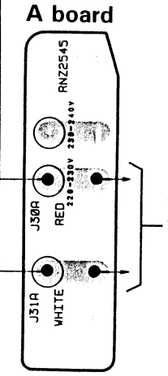

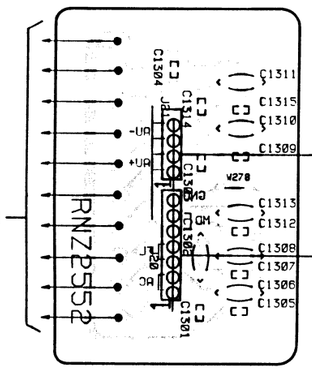

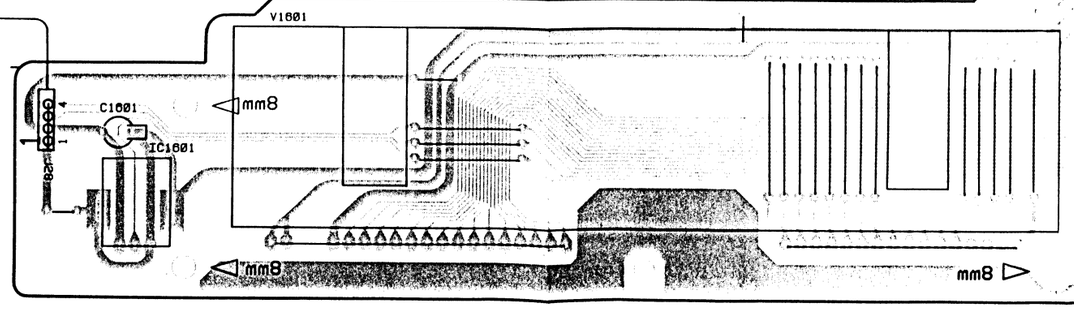

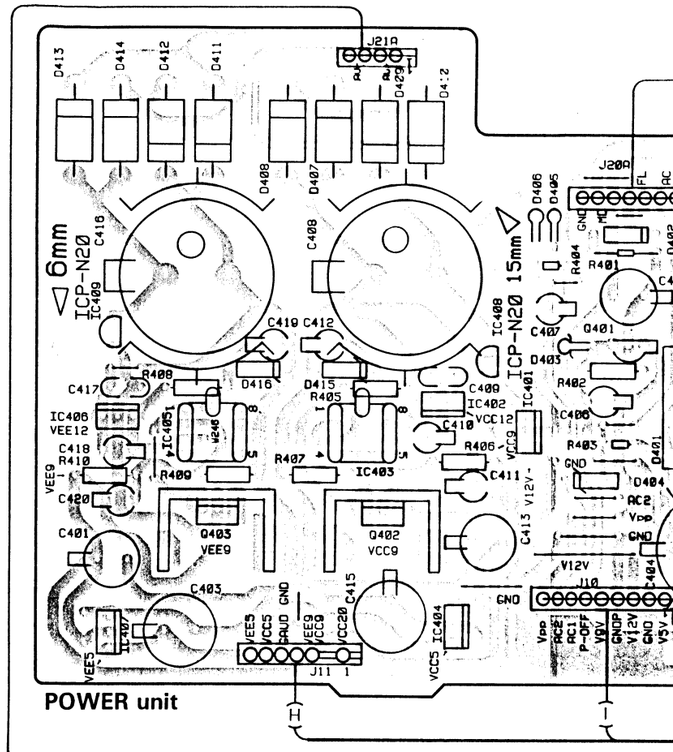

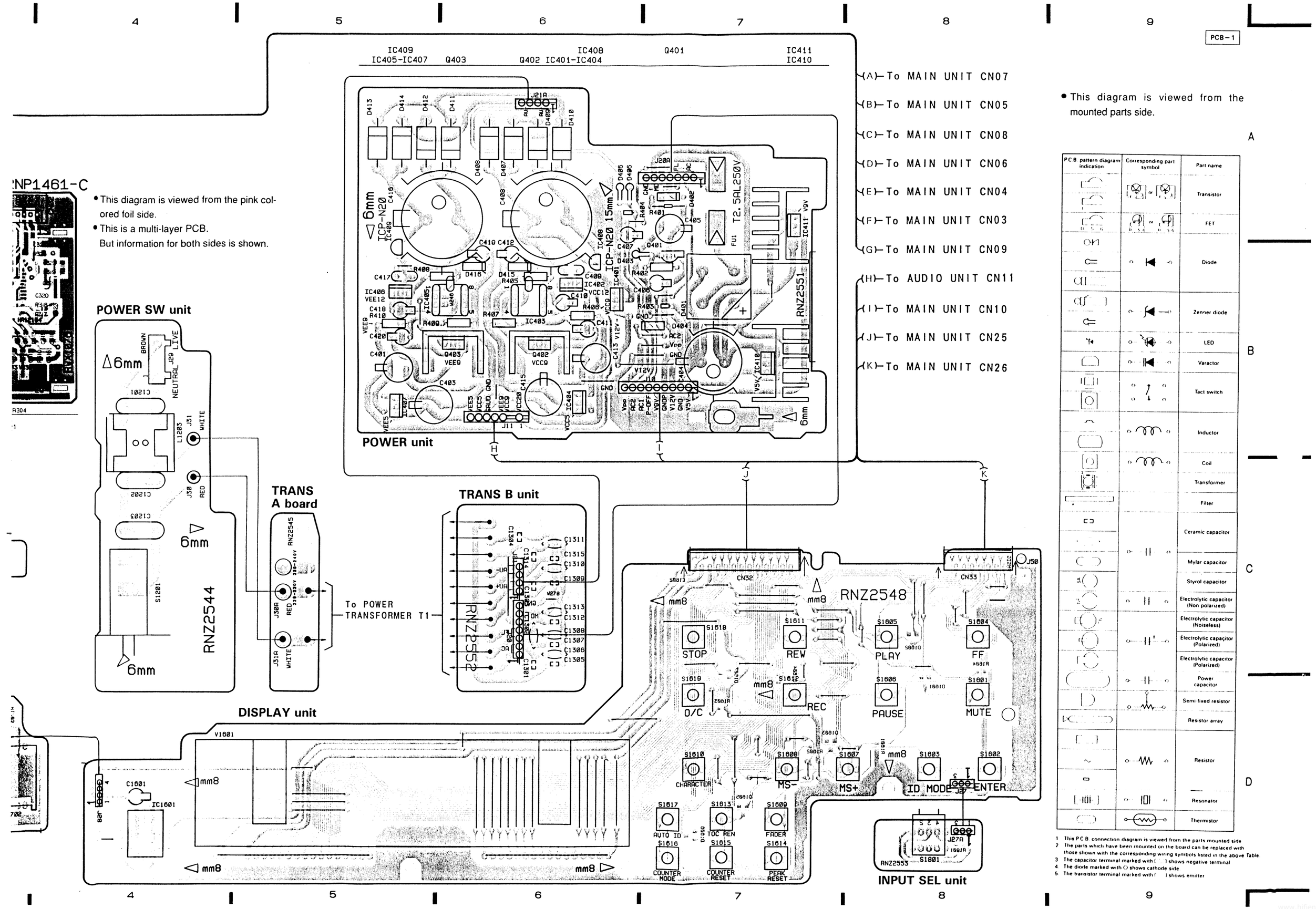
PCB-1
4
5
6
7
8
9
NP1461-C
This diagram is viewed from the pink colored foil side.
This is a multi-layer PCB.
But information for both sides is shown.
POWER SW unit
RNZ2544
TRANS A board
RNZ2545
To POWER TRANSFORMER T1
TRANS B unit
RNZ2552
POWER unit
ICP-N20
T2.5AL250V
RNZ2551
DISPLAY unit
RNZ2548
STOP
REW
PLAY
FF
O/C
REC
PAUSE
MUTE
CHARACTER
MS-
MS+
ID MODE
ENTER
AUTO ID
TOC REN
FADER
COUNTER MODE
COUNTER RESET
PEAK RESET
INPUT SEL unit
RNZ2553
(A)-To MAIN UNIT CN07
(B)-To MAIN UNIT CN05
(C)-To MAIN UNIT CN08
(D)-To MAIN UNIT CN06
(E)-To MAIN UNIT CN04
(F)-To MAIN UNIT CN03
(G)-To MAIN UNIT CN09
(H)-To AUDIO UNIT CN11
(I)-To MAIN UNIT CN10
(J)-To MAIN UNIT CN25
(K)-To MAIN UNIT CN26
This diagram is viewed from the mounted parts side.
A
B
C
D
PCB pattern diagram indication
Corresponding part symbol
Part name
Transistor
FET
Diode
Zenner diode
LED
Varactor
Tact switch
Inductor
Coil
Transformer
Filter
Ceramic capacitor
Mylar capacitor
Styrol capacitor
Electrolytic capacitor (Non polarized)
Electrolytic capacitor (Noiseless)
Electrolytic capacitor (Polarized)
Electrolytic capacitor (Polarized)
Power capacitor
Semi fixed resistor
Resistor array
Resistor
Resonator
Thermistor
1 This PCB connection diagram is viewed from the parts mounted side
2 The parts which have been mounted on the board can be replaced with those shown with the corresponding wiring symbols listed in the above Table
3 The capacitor terminal marked with [ ] shows negative terminal
4 The diode marked with O shows cathode side
5 The transistor terminal marked with [ ] shows emitter

Line Voltage Selection

Line voltage can be changed with the following steps.

1. Disconnect the AC power cord.
2. Remove the top cover.
3. Change the connection with the power transformer primary taps (T1).
4. Stick the line voltage label on the rear panel.

Part No.	Description
AAX−193	220V label
AAX−192	240V label

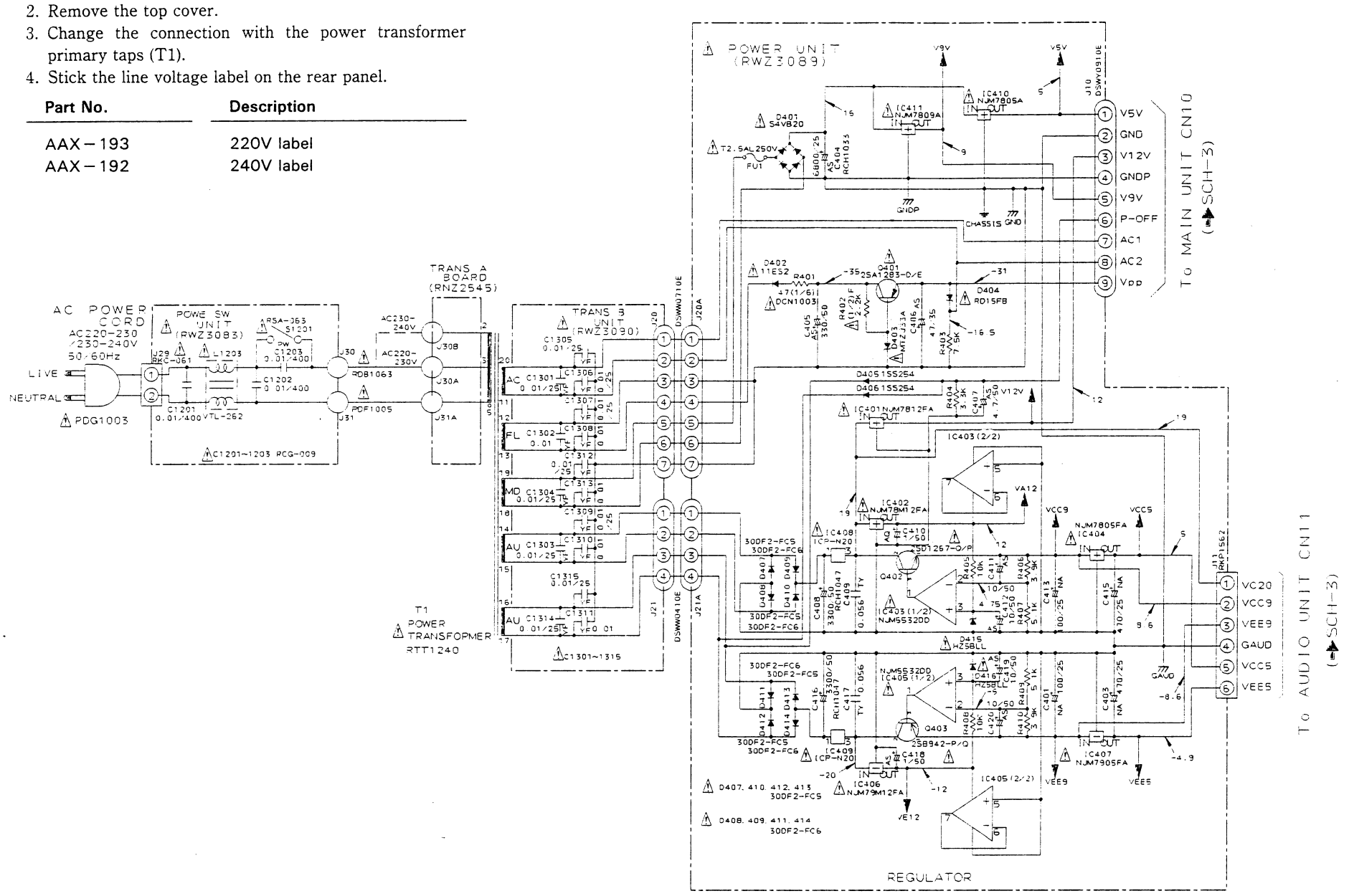

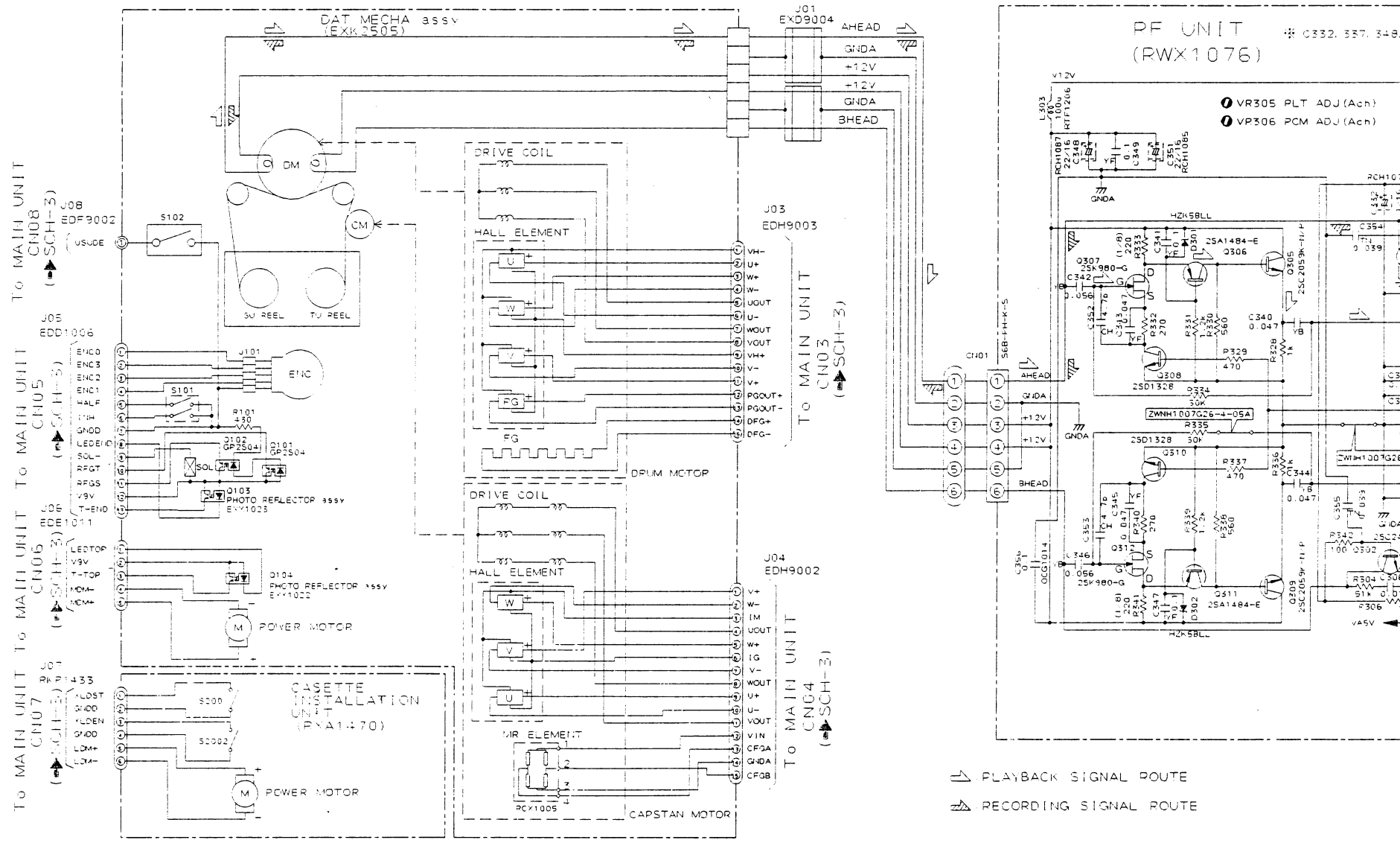

SCH−2

DAT MECHA Assy, RF UNIT, DISPLAY UNIT, SW UNIT, LED UNIT, INPUT SEL UNIT, POWER UNIT, POWER SW UNIT, TRANS B UNIT, TRANS A BOARD

RAW1117 (V1601 : DISPLAY UNIT)

● FL Tube

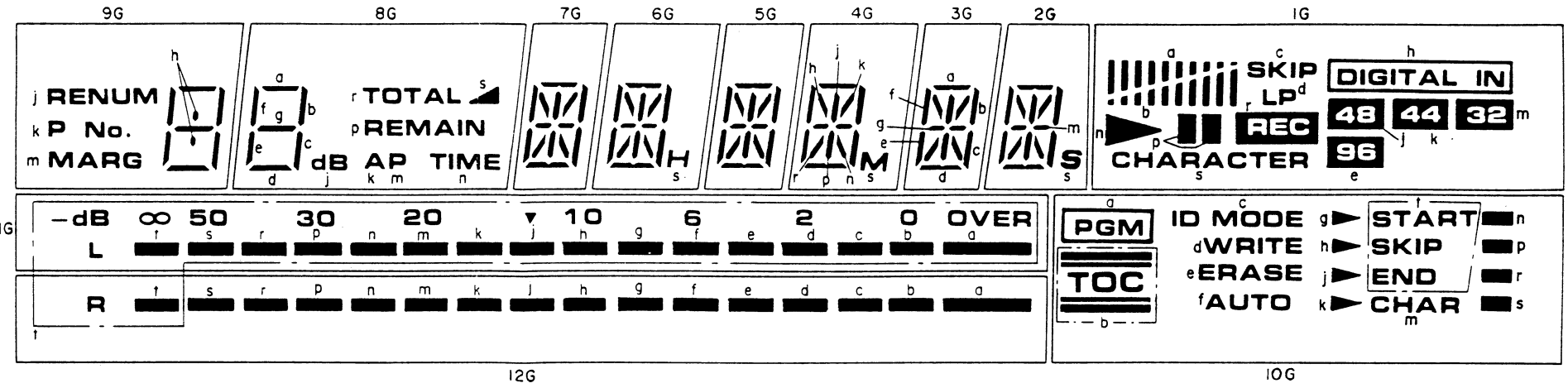

TERMINAL CONNECTION

TERMINAL NO.	1	2	3	4	5	6	7	8	9	10	11	12	13	14	15
ELECTRODE	F1	F1	NP	NP	Pt	Ps	Pr	Pp	Pn	Pm	Pk	Pj	Ph	Pg	Pf

TERMINAL NO.	16	17	18	19	20	21	22	23	24	25	26	27	28	29	30	31	32	33	34	35
ELECTRODE	Pe	Pd	Pc	Pb	Pa	NP	NP	NP	NP	NP	NP	NP	NP	NP	NP	NP	NP	NP	12G	11G

TERMINAL NO.	36	37	38	39	40	41	42	43	44	45	46	47	48	49
ELECTRODE	10G	9G	8G	7G	6G	5G	4G	3G	2G	1G	NP	NP	F2	F2

Notes F: Filament NP: No Pin
G: Grid
P: Anode

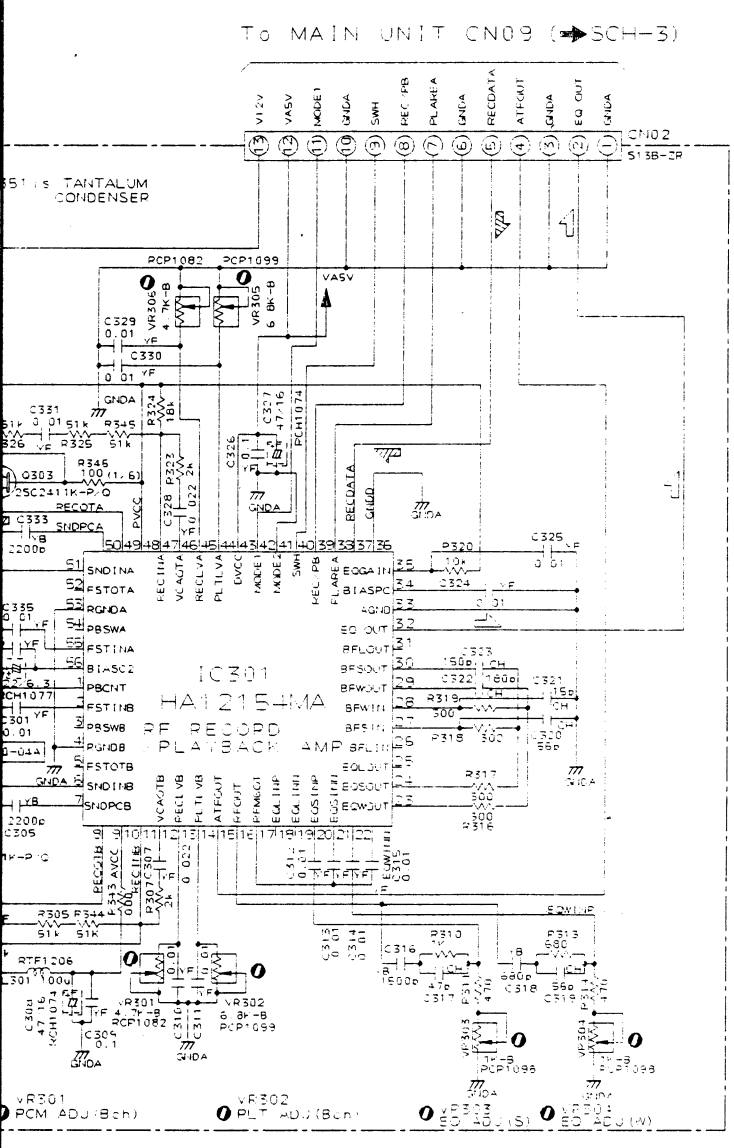

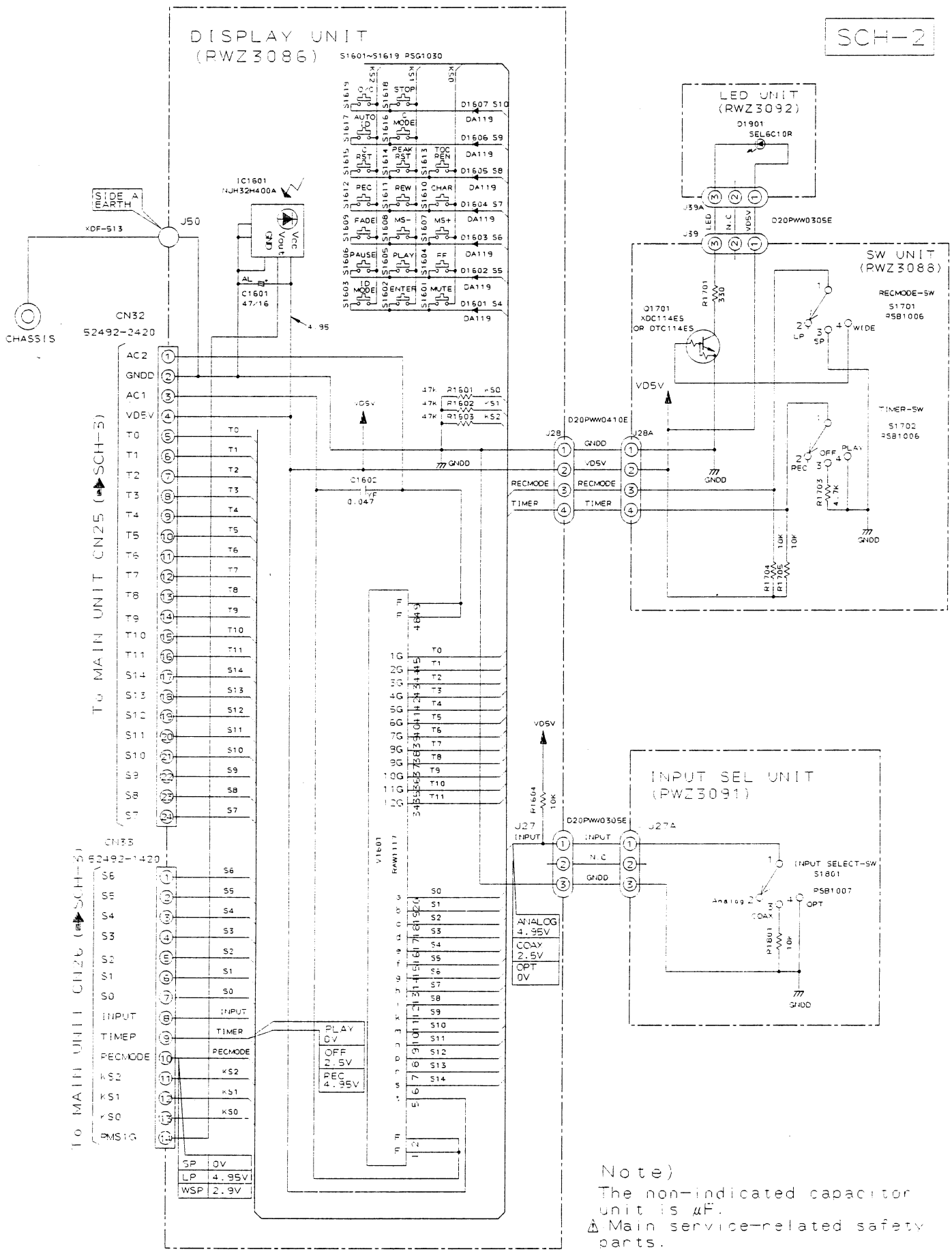

Note)
The non-indicated capacitor unit is μF.
⚠ Main service-related safety parts.

DAT MECHA Assy, RF UNIT, DISPLAY UNIT, SW UNIT, LED UNIT, INPUT SEL UNIT, POWER UNIT, POWER SW UNIT, TRANS B UNIT, TRANS A BOARD

SCH-2

3.3 MAIN UNIT, HEADPHONE UNIT, CAP PRE-DRIVE UNIT, AUDIO UNIT AND VR UNIT

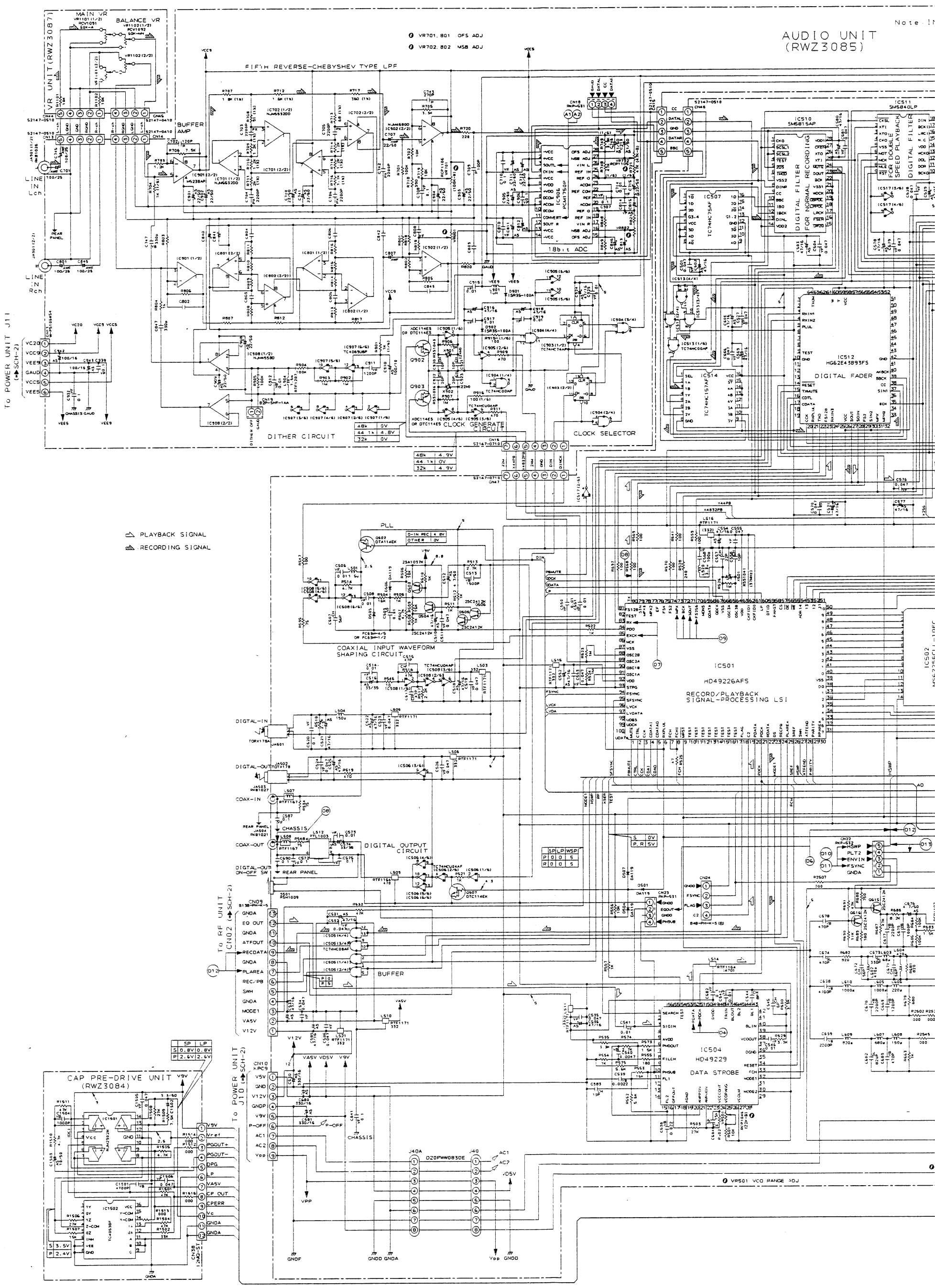

SCH – 3 MAIN UNIT, HEADPHONE UNIT, CAP PRE-DRIVE UNIT, AUDIO UNIT, VR UNIT

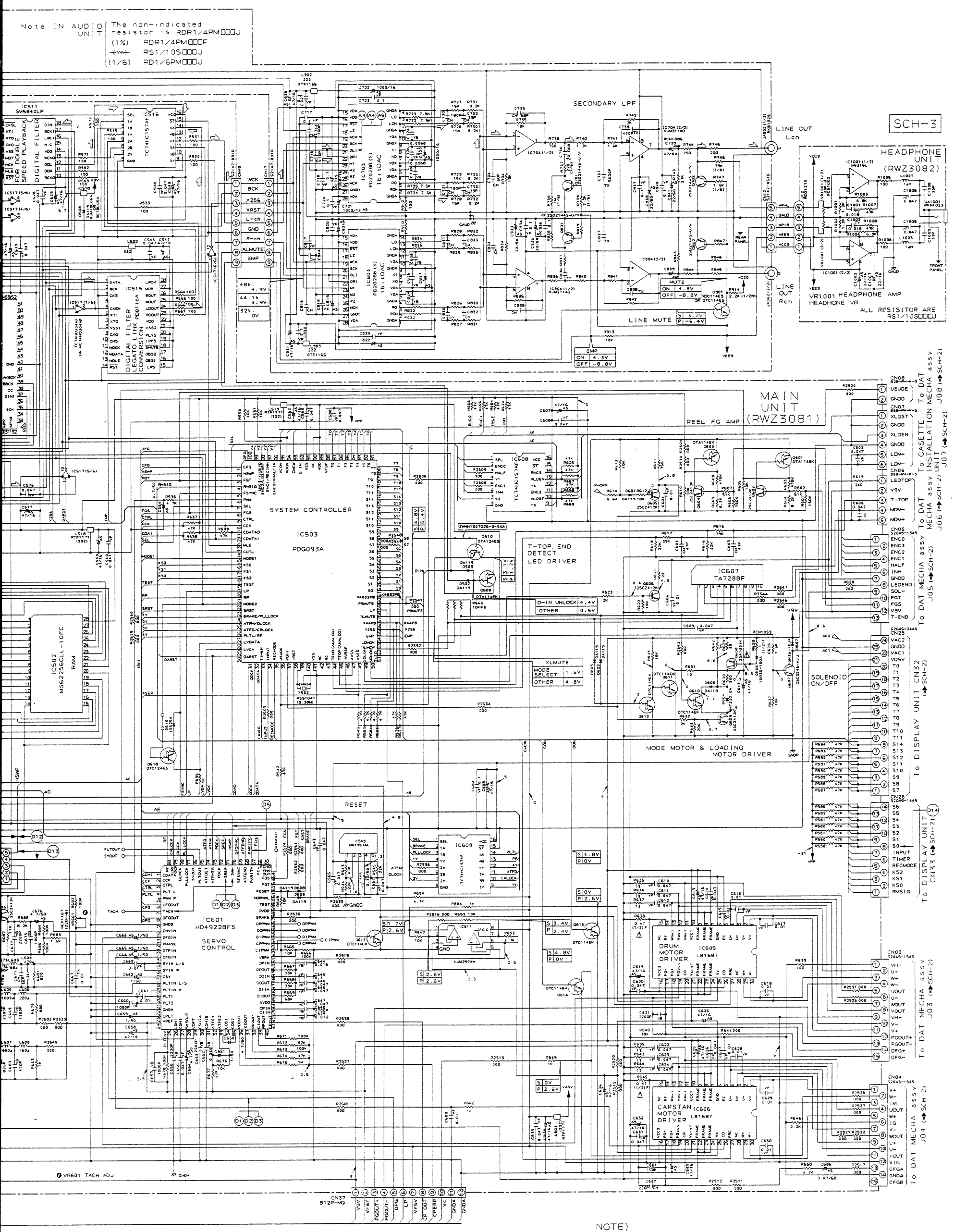

Note : R2505, R2519, R2540, R2543, R2510, R2514, R2539, and R2553 are 2125-size jumper chips (guard color : green or blue)

⚠ Main service-related safety parts.

NOTE)
S : STOP
P : PLAY
R : REC

MAIN UNIT, HEADPHONE UNIT, CAP PRE-DRIVE UNIT, AUDIO UNIT, VR UNIT

SCH-3

● Waveforms

A1 : ADC

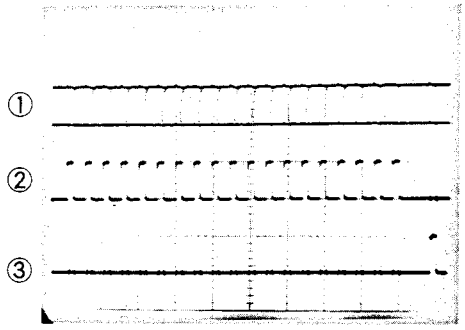

Mode : SP (REC)
Input : 1kHz−0dB
5V/div., 0.5μS/div.

① SOUTL (IC906−Pin3)
② CKIN (IC906−Pin4)
③ CONVERT (IC906−Pin11)

A2 : ADC

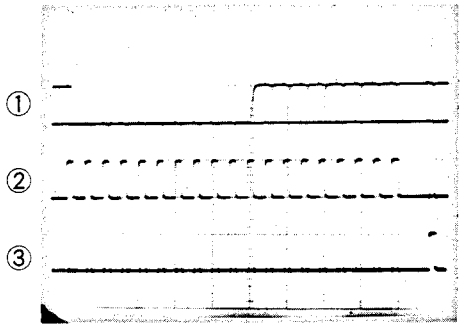

Mode : SP (REC)
Input : No input
5V/div., 0.5μS/div.

① SOUTL (IC906−Pin3)
② CKIN (IC906−Pin4)
③ CONVERT (IC906−Pin11)

A3 : DAC

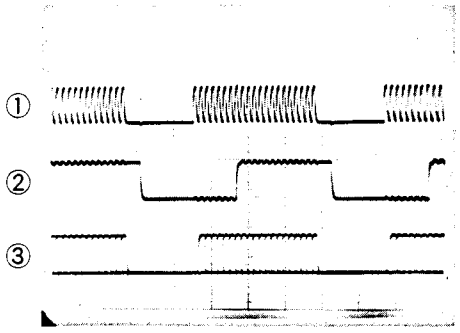

Mode : SP (REC)
Input : 1kHz−0dB
5V/div., 0.5μS/div.

① BCK (IC703−Pin20)
② WCK (IC703−Pin19)
③ DLI (IC703−Pin21)

A4 : DAC

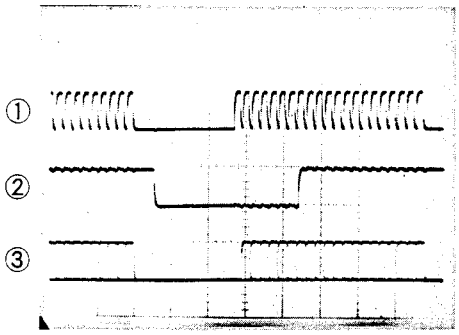

Mode : LP (REC)
Input : 1kHz−0dB
5V/div., 0.5μS/div.

① BCK (IC703−20Pin)
② WCK (IC703−Pin19)
③ DLI (IC703−Pin21)

A5 : DAC

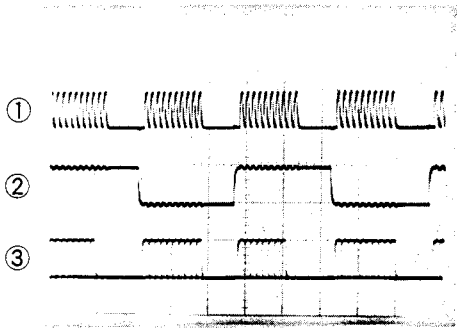

Mode : WSP (REC)
Input : 1kHz−0dB
5V/div., 0.5μS/div.

① BCK (IC703−Pin20)
② WCK (IC703−Pin19)
③ DLI (IC703−Pin21)

www.hifiengine.com

D1

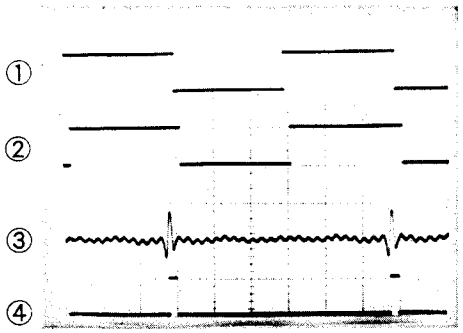

Mode : SP (PLAY)
5V/div., 5mS/div.
(DPG : 0.5V/div.)

① SWP (IC601−Pin70)
② SREF (IC601−Pin71)
③ DPG (CN37−Pin5)
④ TACH (IC601−Pin7)

D2

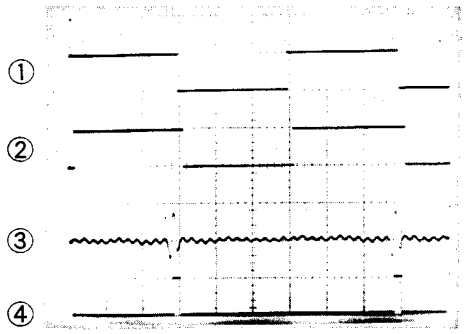

Mode : LP (REC−PLAY)
5V/div., 10mS/div.
(DPG : 0.5V/div.)

① SWP (IC601−Pin70)
② SREF (IC601−Pin71)
③ DPG (CN37−Pin5)
④ TACH (IC601−Pin7)

D3

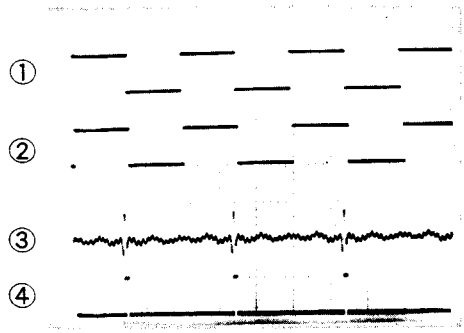

Mode : WSP (PLAY)
5V/div., 5mS/div.
(DPG : 0.5V/div.)

① SWP (IC601−Pin70)
② SREF (IC601−Pin71)
③ DPG (CN37−Pin5)
④ TACH (IC601−Pin7)

D4

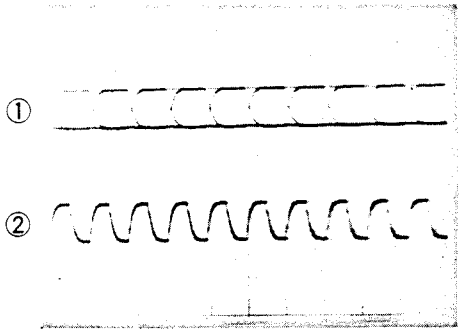

Mode : SP (PLAY)
5V/div., 0.1μS/div.

① PDATA (IC504−Pin52)
② PDCK (IC504−Pin51)

D5

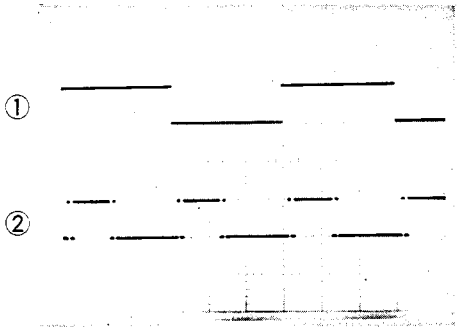

Mode : SP (PLAY)
5V/div., 5mS/div.

① SWP (IC601−Pin70)
② PARITY (IC601−Pin67)

www.hifiengine.com

D6

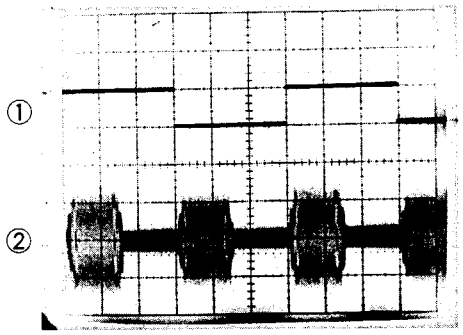

Mode : SP (PLAY)

① SWP (CN22−Pin5)
5V/div., 5mS/div.
② EQ OUT (CN23−Pin2)
0.2V/div., 5mS/div.

D7

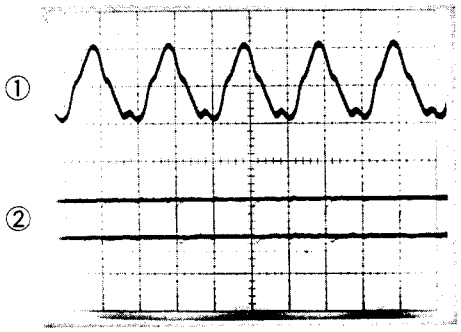

Mode : D−IN (REC)
Fs = 48kHz

① EXCK (IC501−Pin85)
2V/div., 20nS/div.
② RX (IC501−Pin83)
5V/div., 20nS/div.

D8

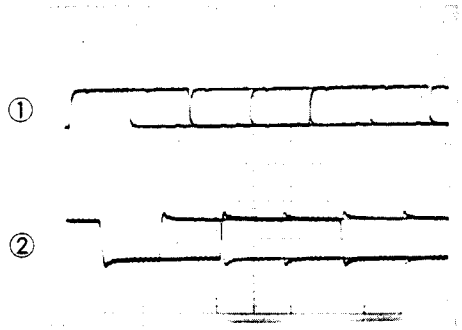

Mode : D−IN (REC)
Fs = 48kHz

① TX (IC501−Pin80)
5V/div., 0.1μS/div.
② COAX OUT (JA504)
1V/div., 0.1μS/div.

D9

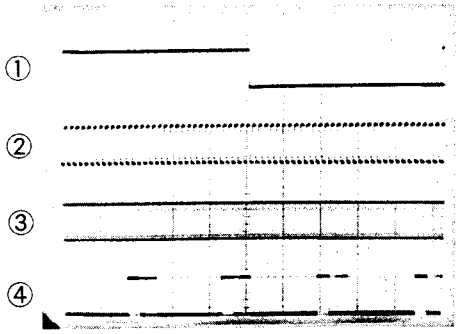

Mode : SP (REC)
Input : No input
5V/div., 2μS/div.

① MPX (IC501−Pin73)
② BCK (IC501−Pin72)
③ FS256 (IC501−Pin70)
④ SOUT (IC501−Pin71)

D10

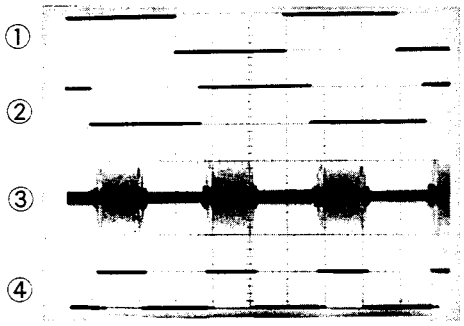

Mode : SP (PLAY)
5V/div., 5mS/div.
(ENVIN : 0.5V/div.)

① FSYNC (CN22−Pin2)
② SWP (CN22−Pin5)
③ ENVIN (CN22−Pin3)
④ ENVOUT (IC601−Pin64)

D11

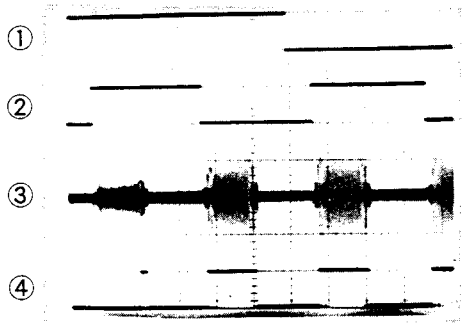

Mode : LP (PLAY)
5V/div., 5mS/div.
(ENVIN : 0.5V/div.)

① FSYNC (CN22−Pin2)
② SWP (CN22−Pin5)
③ ENVIN (CN22−Pin3)
④ ENVOUT (IC601−Pin64)

www.hifiengine.com

D12

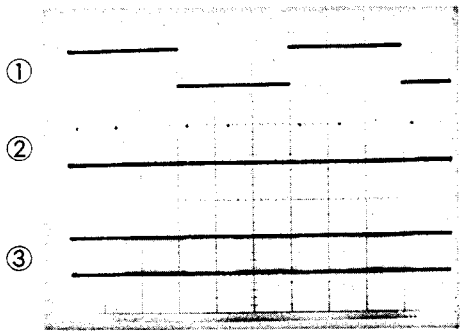

Mode : SP (REC)
5V/div., 5mS/div.

① SWP (CN22 – Pin5)
② PLAREA (CN09 – Pin7)
③ RECDATA (CN09 – Pin9)

D13

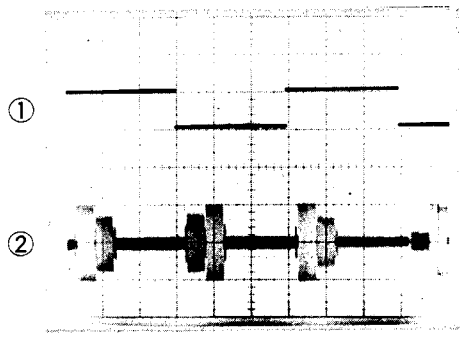

Mode : SP (PLAY)
Test Tape : TY7111

① SWP (CN22 – Pin5)
5V/div., 5mS/div.
② PLY2 (CN22 – Pin4)
0.1V/div., 5mS/div.

D14

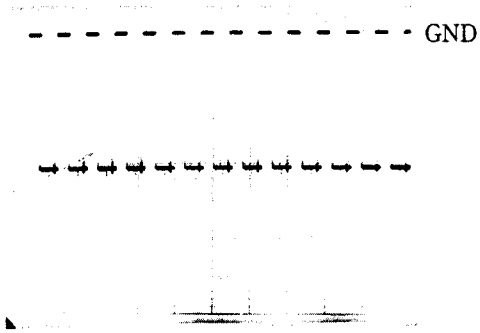

Mode : STOP
10V/div., 2mS/div.

SO (Segment)
(CN26 – Pin8)

www.hifiengine.com

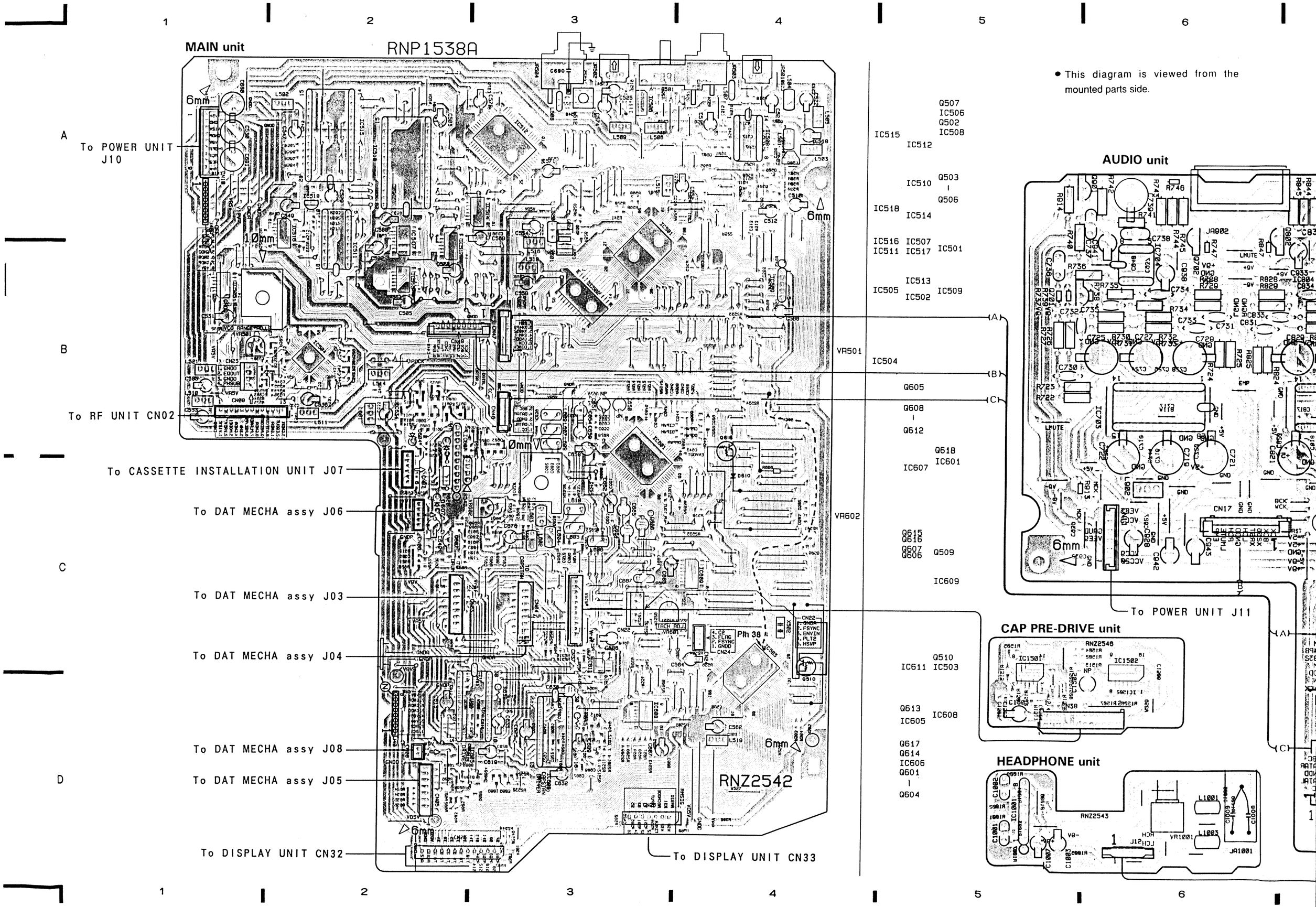

- This diagram is viewed from the mounted parts side.

- This diagram is viewed from the mounted parts side.

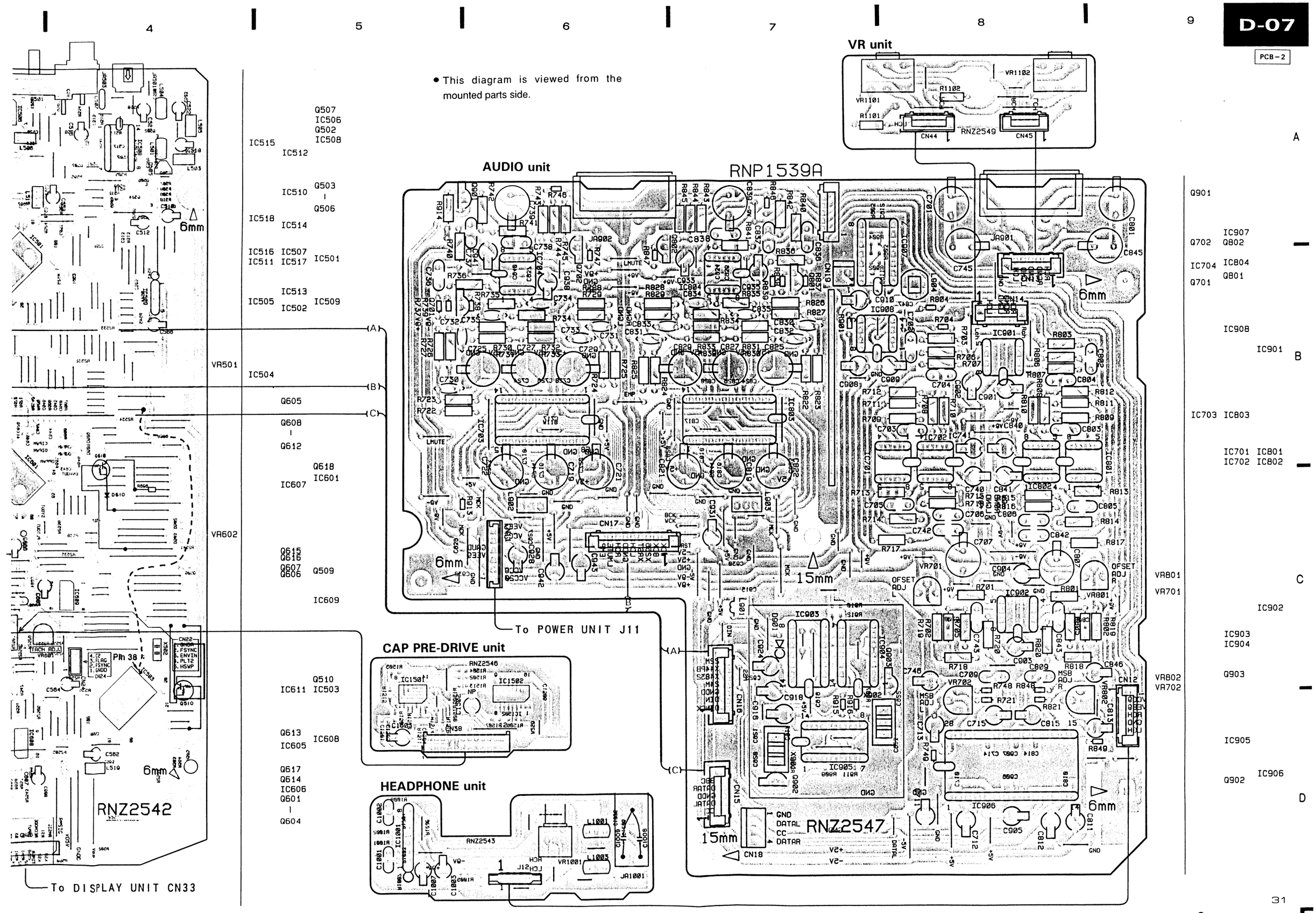

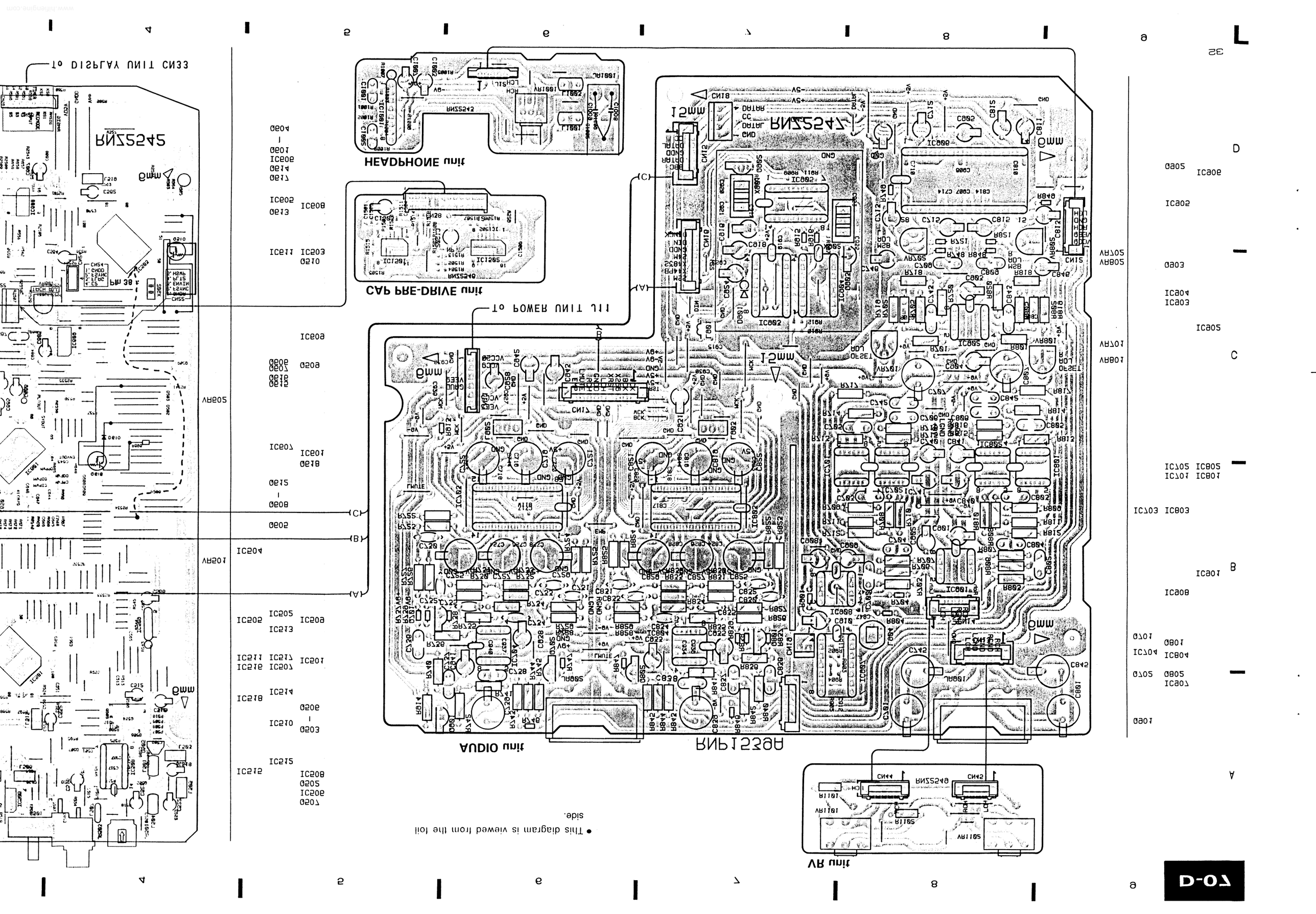
to DISPLAY UNIT CN33
RN2524
HEADPHONE unit
CAP PRE-DRIVE unit
to POWER UNIT CN1
AUDIO unit
RN1229A
RV unit
RN2524
RN2524
RN2524

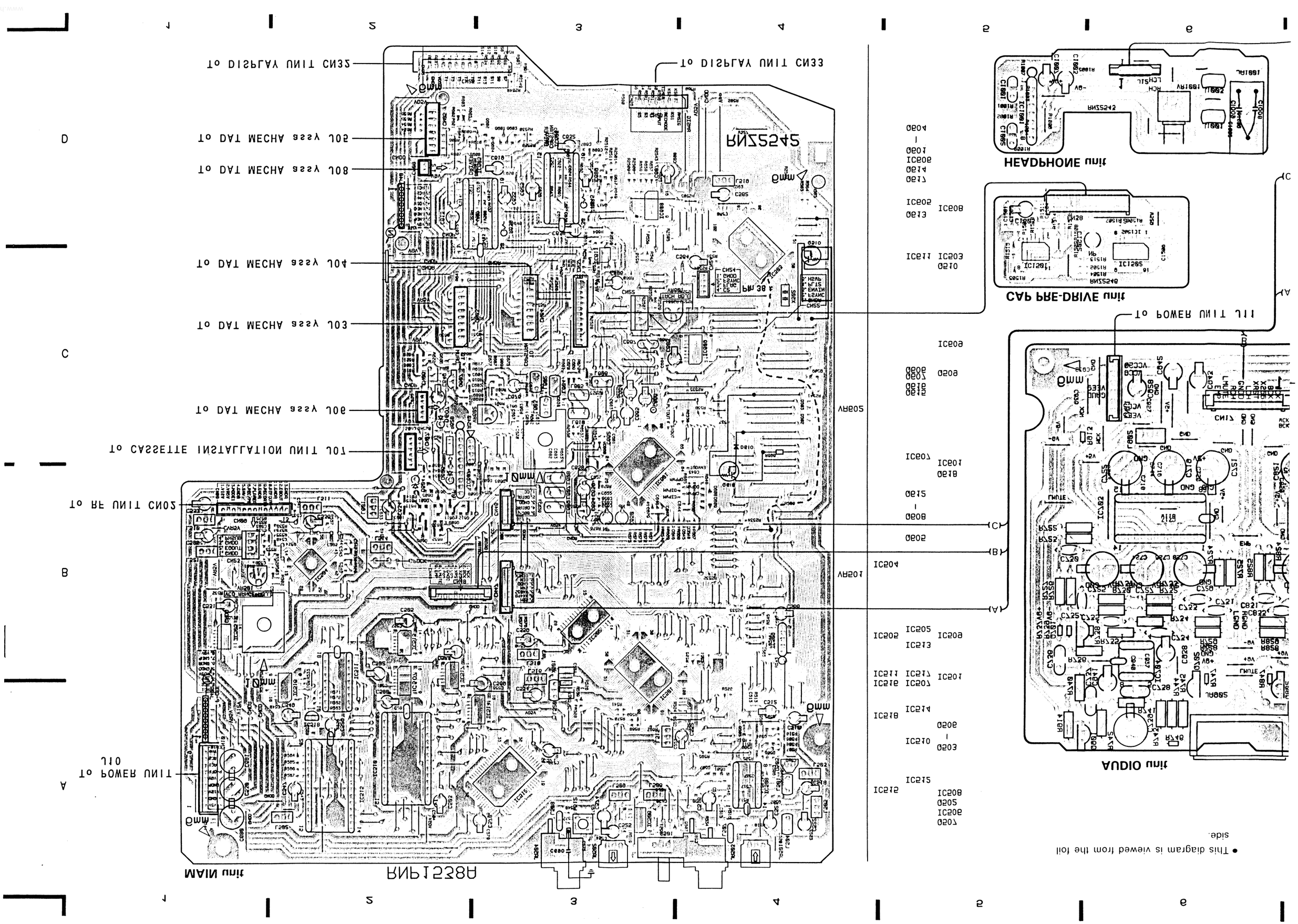
MAIN unit
RWA1228
TO POWER UNIT 01L
TO RR UNIT CN03
TO CASSETTE INSTALLATION UNIT 10L
TO DAT MECHA 30L
TO DAT MECHA 40L
TO DAT MECHA 50L
TO DAT MECHA 60L
TO DISPLAY UNIT CN33
TO DISPLAY UNIT CN32
RN2524
AUDIO unit
TO POWER UNIT 11L
CAP PRE-DRIVE unit
HEADPHONE unit
IC201
IC202
IC203
IC204
IC205
IC206
IC207
IC208
IC209
IC210
IC211
IC212
IC213
IC214
IC215
IC216
IC217
IC218
IC219
IC220
IC221
IC222
IC223
IC224
IC225
IC226
IC227
IC228
IC229
IC230
IC231
IC232
IC233
IC234
IC235
IC236
IC237
IC238
IC239
IC240

4. PCB PARTS LIST

NOTES :

- *Parts marked by "NSP" are generally unavailable because they are not in our Master Spare Parts List.*
- *The ⚠ mark found on some component parts indicates the importance of the safety factor of the part. Therefore, when replacing, be sure to use parts of identical designation.*
- *Parts marked by "◉" are not always kept in stock. Their delivery time may be longer than usual or they may be unavailable.*
- *When ordering resistors, first convert resistance values into code form as shown in the following examples.*

Ex. 1 When there are 2 effective digits (any digit apart from 0), such as 560 ohm and 47k ohm (tolerance is shown by J = 5%, and K = 10%).

560Ω → 56 × 10^1 → 561 ..... RD1/8PM [5][6][1] J
47kΩ → 47 × 10^3 → 473 ..... RD1/4PS [4][7][3] J
0.5Ω → 0R5 ..... RN2H [0][R][5] K
1Ω → 010 ..... RS1P [0][1][0] *K*

Ex. 2 When there are 3 effective digits (such as in high precision metal film resistors).

5.62kΩ → 562 × 10^1 → 5621 ..... RM1/4PC [5][6][2][1] F

Mark	No.	Description	Parts No.
LIST OF ASSEMBLIES			
NSP		RF UNIT	RWX1076
NSP		MOTHER UNIT	RWM1659
		├ MAIN UNIT	RWZ3081
		├ HEADPHONE UNIT	RWZ3082
NSP		├ POWER SW UNIT	RWZ3083
		├ CAP PRE-DRIVE UNIT	RWZ3084
NSP		└ TRANS A BOARD	RNZ2545
NSP		SUB UNIT	RWM1660
		├ AUDIO UNIT	RWZ3085
		├ DISPLAY UNIT	RWZ3086
		├ VR UNIT	RWZ3087
NSP		├ SW UNIT	RWZ3088
		├ POWER UNIT	RWZ3089
		├ TRANS B UNIT	RWZ3090
NSP		├ INPUT SEL UNIT	RWZ3091
NSP		└ LED UNIT	RWZ3092
NSP		DAT MECHA ASSY	EXK2505
NSP		└ P. C. BOARD	ENX1011
NSP		├ REEL SENSOR BOARD	ENP1027
		├ PHOTO REFLECTOR ASSY	EXX1022
		└ PHOTO REFLECTOR ASSY	EXX1023
RF UNIT			
SEMICONDUCTORS			
		IC301	HA12154MA
		Q306, Q311	2SA1484
		Q305, Q309	2SC2059K
		Q302, Q303	2SC2411K
		Q308, Q310	2SD1328
		Q307, Q312	2SK980
		D301, D302	HZK5BLL
COILS			
		L301, L303 (100μH)	RTF1206
CAPACITORS			
		C352, C353	CCPUCH4R7K50
		C321	CCSQCH150J50
		C323	CCSQCH151J50
		C322	CCSQCH181J50
		C317	CCSQCH470J50
		C319, C320	CCSQCH560J50
		C354, C355	CFTNA393J50
		C316	CKSQYB152K50
		C305, C333	CKSQYB222K50
		C340, C344	CKSQYB473K50
		C342, C346	CKSQYB563K25
		C318	CKSQYB681K50
		C301, C306, C310−C315, C324, C325, C329−C331, C335, C336	CKSQYF103Z50
		C309, C326, C341, C347, C349	CKSQYF104Z25
		C307, C328	CKSQYF223Z50
		C343, C345	CKSQYF473Z25
		C356 (0.1/50)	OCG1014
		C308, C327 (47/16)	RCH1074
		C337 (22/6.3)	RCH1077
		C332 (1/16)	RCH1078
		C351 (22/16)	RCH1085
		C348 (22/16)	RCH1087
RESISTORS			
		VR301, VR306 (4.7k−B)	RCP1082
		VR303, VR304 (1k−B)	RCP1098
		VR302, VR305 (6.8k−B)	RCP1099
		R346	RD1/6PM101J
		R333, R341	RS1/8S221J
		Other Resistors	RS1/10S□□□J

www.hifiengine.com

Mark	No.	Description	Parts No.
	MAIN UNIT		
	SEMICONDUCTORS		
	IC501		HD49226AFS
	IC601		HD49228FS
	IC504		HD49229
	IC512		HG62E43B93FS
	IC605, IC606		LB1687
	IC509		M51957AL
	IC502		MS62256CLL−10FC
	IC611		NJM2904M
⚠	IC518		NJM78L05A
	IC515		PD0116A
	IC503		PDG093A
	IC510		SM5815AP
	IC511		SM5840LP
	IC607		TA7288P
	IC513		TC74HC00AF
	IC505		TC74HC08AF
	IC514, IC516, IC608, IC609		TC74HC157AF
	IC507		TC74HC75AF
	IC506, IC517		TC74HCU04AF
	IC508		TC74HCU04AP
	Q503, Q608		2SA1037K
	Q504−Q506, Q602, Q604−Q606, Q609, Q615, Q616		2SC2412K
	Q607		2SC3246
	Q502, Q509, Q601, Q603		DTA114EK
	Q510		DTA124ES
	Q507, Q610−Q614, Q617		DTC114EK
	Q618		DTC124ES
	D606, D607		1SR35−100AVL
	D610		1SS254
	D501−D504, D506−D508, D601−D603, D605, D608, D609		DA119
	D505		FC63M−4/5
	D604		MTZJ2.0AX
	SWITCH		
	S501		RSH1009
	COILS		
	L605, L610		LFA102J
	L504, L608		LFA151J
	L501		LFA1R5J
	L606		LFA221J
	L520		LFA3R3J
	L602, L604		LFA471J
	L603		LFA680J
	L607		LFA681J
	L609		LFA821J
	L512		PTL1003
	L509, L514		RTF1164
	L507, L508		RTF1167
	L502, L503, L505, L506, L510, L511, L515, L516, L518, L519, L521, L601		RTF1171

Mark	No.	Description	Parts No.
	CAPACITORS		
	C584		CCSQCH030C50
	C545		CCSQCH060D50
	C544		CCSQCH080D50
	C558, C583		CCSQCH100D50
	C568		CCSQCH101J50
	C557		CCSQCH220J50
	C687		CCSQCH221J50
	C515, C517, C603, C604		CCSQCH470J50
	C507, C671, C672		CCSQCH560J50
	C673		CCSQSL331J50
	C674, C678		CCSQSL471J50
	C682		CCSQSL821J50
	C651		CEANP010M50
	C650		CEANP4R7M50
	C659, C662, C664−C666		CEAS010M50
	C516, C574		CEAS330M35
	C530, C680, C681		CEAS331M16
	C502, C503, C505, C510, C518, C521, C522, C525, C529, C531, C533, C536, C547, C549, C552, C554, C559, C562, C569, C571, C577, C578, C580, C585, C607, C613, C619, C625, C632, C634−C636, C649, C658, C685, C689		CEAS470M16
	C512, C564, C654, C676		CEAS4R7M50
	C566		CEASR33M50
	C686		CEASR47M50
	C667		CFTXA103J50
	C657, C660, C675		CKSQYB102K50
	C669		CKSQYB122K50
	C679		CKSQYB123K50
	C513		CKSQYB152K50
	C644		CKSQYB153K50
	C539, C621, C639, C653, C656, C670, C677		CKSQYB222K50
	C538		CKSQYB223K50
	C683		CKSQYB471K50
	C540, C638, C648		CKSQYB472K50
	C652		CKSQYB683K25
	C506, C508, C509, C514, C541, C542, C546, C550, C551, C573, C601, C606, C615−C618, C627−C630, C661, C663, C688		CKSQYF103Z50
	C520, C572, C575, C582, C587, C641, C645, C684		CKSQYF104Z25
	C501, C504, C511, C519, C523, C524, C526−C528, C532, C534, C535, C543, C548, C553, C555, C556, C560, C563, C565, C567, C570, C576, C579, C581, C586, C588, C602, C605, C608−C612, C614, C620, C622−C624, C626, C631, C633, C640, C643, C646, C647, C655		CKSQYF473Z50
	C690 (0.1/50)		OCG1014

www.hifiengine.com

Mark	No.	Description	Parts No.
RESISTORS			
	VR501	(22k−B)	RCP1046
	VR601	(220k−B)	RCP1107
	R628	(1Ω, 1/2W)	RCN1059
	R540	(10k, 3S)	RCX1048
	R638, R645		RD1/2PMFR47J
	R696		RD1/6PM102J
	Other Resistors		RS1/10S□□□J
OTHERS			
	CN5	13P FFC CONNECTOR	52045−1345
	CN26	14P FFC CONNECTOR	52045−1445
	CN3, CN4	15P FFC CONNECTOR	52045−1545
	CN25	24P FFC CONNECTOR	52045−2445
	CN37	MQ CONNECTOR (12P)	B12P−MQ
	CN10	9P JUMPER CONNECTOR	KPC9
	JA504	1P PIN JACK (COAX−OUT)	RKB1021
	JA503	1P PIN JACK WITH SHIELD PLATE (COAX−IN)	RKB1027
	JA501	OPTICAL SENSOR MODULE (DIGITAL−IN)	TORX178A
	JA502	OPTICAL OUTPUT MODULE (DIGITAL−OUT)	TOTX178
	X501	(37.632MHz)	RSS1041
	X502	(8.389MHz)	RSS1042

HEADPHONE UNIT

Mark	No.	Description	Parts No.
SEMICONDUCTORS			
	IC1001		M5216L
COILS			
	L1001, L1003		LFA010K
CAPACITORS			
	C1008, C1009		CCCCH330J50
	C1003, C1007		CEAL220M16
	C1001, C1002		CFTYA183J50
	C1005, C1006		CKSQYF473Z50
RESISTORS			
	VR1001	(20k−B)	PCS1002
	Other Resistors		RS1/10S□□□J
OTHERS			
	JA1001	HEADPHONE JACK	RKN1023

POWER SW UNIT

Mark	No.	Description	Parts No.
SWITCH			
⚠	S1201		RSA−063
COIL			
⚠	L1203		VTL−262
CAPACITORS			
⚠	C1201−C1203	(0.01/400)	RCG−009
OTHERS			
⚠	WRAPPING TERMINAL		RKC−061

CAP PRE DRIVE UNIT

Mark	No.	Description	Parts No.
SEMICONDUCTORS			
	IC1501		NJM2902M
	IC1502		TC4053BF
CAPACITORS			
	C1502		CEANP3R3M50
	C1503		CEAS100M50
	C1504		CKSQYB102K50
	C1501		CKSQYB472K50
	C1505, C1506		CKSQYF473Z50
RESISTORS			
	All Resistors		RS1/10S□□□J
OTHERS			
	CN38	12P SOCKET	12MQ−ST

TRANS A BOARD

TRANS A board has no service part.

AUDIO UNIT

Mark	No.	Description	Parts No.
SEMICONDUCTORS			
	IC901		M5238AP
	IC704, IC804		NJM2114D
	IC908		NJM4558D
	IC902		NJM4580D
	IC701, IC702, IC801, IC802		NJM5532DD
	IC906		PCM1750P
	IC703, IC803		PD2028B (S)
	IC907		TC4069UBP
	IC904		TC74HC00AP
	IC903		TC74HC74AP
	IC905		TC74HCU04AP
	Q701, Q702, Q801, Q802		2SD2144S
	Q901−Q903		XDC114ES

www.hifiengine.com

Mark	No.	Description	Parts No.
	D901, D902		1SR35−100AVL
COILS			
	L901		LFA010K
	L902, L903		RTF1165
	L904		RTF1207
CAPACITORS			
	C730, C731, C830, C831		CCCCH181J50
	C732, C733, C832, C833		CCCCH330J50
	C734, C735, C834, C835		CCCCH680J50
	C716, C816, C920, C921		CCSQCH100D50
	C744, C844		CCSQCH101J50
	C922, C923		CCSQCH200J50
	C713, C746, C813, C846		CEAS010M50
	C910		CEAS101M10
	C942, C943		CEAS101M16
	C719, C721, C722, C727, C819, C821, C822, C827		CEAS102M16
	C711, C712, C715, C740, C741, C811, C812, C815, C840, C841, C901−C905, C908, C909, C933, C935, C938, C941		CEAS220M50
	C916, C918, C924, C928, C931		CEAS470M16
	C738, C838		CFTXA471J50
	C737, C837		CFTXA562J50
	C736, C836		CFTYA683J50
	C911		CKSQYB122K50
	C747, C847		CKSQYB331K50
	C724, C728, C824, C828		CKSQYB682K50
	C714, C814, C912, C915, C917, C919, C925		CKSQYF103Z50
	C708, C710, C717, C718, C720, C723, C726, C808, C810, C817, C818, C820, C823, C826, C906, C907, C927, C930, C932, C934, C936, C937, C939, C940		CKSQYF104Z25
	C709, C809		CQPA101J100
	C702, C802		CQPA121J100
	C743, C843		CQPA271J100
	C703−C706, C742, C803−C806, C842		CQPXA222J2A
	C701, C745, C801, C845	(100/25)	PCH1084
	C707, C807	(22/50)	RCH1043
	C739, C839	(47/50)	RCH1086
RESISTORS			
	VR702, VR802	(47k−B)	RCP1105
	VR701, VR801	(100k−B)	RCP1106
	R914		RD1/2PMF222J
	R915, R916		RD1/6PM101J
	R704, R804, R901		RD1/6PM102J
	R913		RD1/6PM103J
	R738, R838		RD1/6PM105J
	R747, R847		RD1/6PM152J
	R737, R837		RD1/6PM221J
	R739, R839		RD1/6PM222J
	R749, R849		RD1/6PM392J
	R746, R846		RD1/6PM393J

Mark	No.	Description	Parts No.
	R721, R748, R821, R848		RD1/6PM473J
	R702, R719, R802, R819		RDR1/4PM103J
	R701, R801		RDR1/4PM104J
	R716, R816		RDR1/4PM112F
	R709, R710, R714, R715, R809, R810, R814, R815		RDR1/4PM122F
	R703, R740, R803, R840		RDR1/4PM122J
	R726−R729, R826−R829		RDR1/4PM153J
	R712, R812		RDR1/4PM162F
	R741, R841		RDR1/4PM162J
	R707, R807		RDR1/4PM182F
	R734, R735, R834, R835		RDR1/4PM183J
	R745, R845		RDR1/4PM201J
	R711, R811		RDR1/4PM202F
	R742, R842		RDR1/4PM202J
	R720, R820		RDR1/4PM221J
	R743, R843		RDR1/4PM273J
	R705, R805		RDR1/4PM332J
	R717, R817		RDR1/4PM361F
	R718, R818		RDR1/4PM391J
	R713, R813		RDR1/4PM680F
	R736, R744, R836, R844		RDR1/4PM751J
	R706, R722−R725, R806, R822−R825		RDR1/4PM752J
	R730−R733, R830−R833		RDR1/4PM822J
	R708, R808		RDR1/4PM910F
	Other Resistors		RS1/10S□□□J
OTHERS			
	JA901, JA902 (LINE−IN/OUT)		RKB1026
	X902	(22.5792MHz)	RSS1035
	X901	(24.5760MHz)	RSS1043

DISPLAY UNIT

SEMICONDUCTORS			
	D1601−D1607		DA119
SWITCHES			
	S1601−S1619		RSG1030
CAPACITORS			
	C1601		CEAL470M16
	C1602		CKSQYF473Z50
RESISTORS			
	All Resistors		RS1/10S□□□J
OTHERS			
	CN33	14P FFC BOTOM CONNECTOR	52492−1420
	CN32	24P FFC BOTOM CONNECTOR	52492−2420

www.hifiengine.com

Mark	No.	Description	Parts No.
	V1601	FL TUBE	RAW1117
		REMOTE CONTROL RECEIVER UNIT	NJH32H400A

VR UNIT

RESISTORS

	VR1101	(50k−A)	RCV1091
	VR1102	(50k−MN)	RCV1092
	R1101, R1102		RDR1/4PM103J

SW UNIT

SEMICONDUCTORS

	Q1701	XDC114ES

SWITCHES

	S1701, S1702	RSB1006

RESISTORS

	All Resistors	RS1/10S□□□J

POWER UNIT

SEMICONDUCTORS

⚠	IC408, IC409	ICP−N20
⚠	IC403, IC405	NJM5532DD
⚠	IC410	NJM7805A
⚠	IC404	NJM7805FA
⚠	IC411	NJM7809A
⚠	IC401	NJM7812FA
⚠	IC402	NJM78M12FA
⚠	IC407	NJM7905FA
⚠	IC406	NJM79M12FA
⚠	Q401	2SA1283
⚠	Q403	2SB942
⚠	Q402	2SD1267
⚠	D402	11ES2
	D405, D406	1SS254
⚠	D407, D410, D412, D413	30DF2−FC5
⚠	D408, D409, D411, D414	30DF2−FC6
⚠	D415, D416	HZ5BLL
⚠	D403	MTZJ33A
⚠	D404	RD15FB
⚠	D401	S4VB20F

CAPACITORS

	C418	CEAS010M50
	C411, C412, C419, C420	CEAS100M50
	C405	CEAS331M50
	C406	CEAS470M35
	C407	CEAS4R7M50
	C410	CEHAQ010M50
	C401, C413	CENA101M25
	C403, C415	CENA471M25
	C409, C417	CFTYA563J50
	C404 (6800/25)	RCH1033
	C408, C416 (3300/50)	RCH1047

RESISTORS

⚠	R401 (47Ω, 1/6W)	DCN1003
⚠	R402	RD1/2PMF222J
	R404	RD1/6PM332J
	R403	RD1/6PM752J
	Other Resistors	RDR1/4PM□□□J

OTHERS

	EARTH PLATE	VNF−091

TRANS B UNIT

CAPACITORS

⚠	C1302, C1308, C1310, C1311, C1313	CKCYF103Z50
⚠	C1301, C1303−C1306, C1307, C1309, C1312, C1314, C1315	CKPUYF103Z25

INPUT SEL UNIT

SWITCH

	S1801	RSB1007

RESISTORS

	All Resistors	RS1/10S□□□J

LED UNIT

SEMICONDUCTOR

	D1901	SEL6C10R

REEL SENSOR BOARD

REEL SENSOR board has no service part.

PHOTO REFLECTOR ASSY

SEMICONDUCTOR

	Q104 TOP SENSOR	NJL5134KL

PHOTO REFLECTOR ASSY

SEMICONDUCTOR

	Q103 END SENSOR	NJL5134KL

www.hifiengine.com

5. DISASSEMBLY

● Removal of Each Unit

1. Remove the bonnet.
2. Cut the ties holding the various wiring and undo the cord clamps.
3. Remove screw ① (5 screws). (Refer to Fig. 1.)

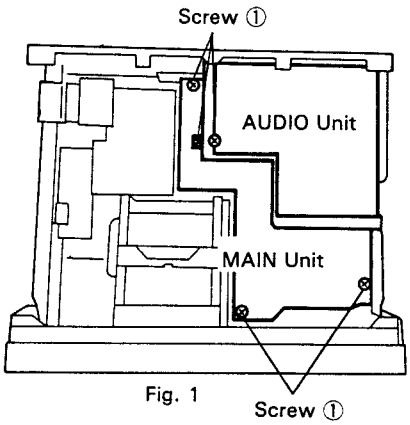

Fig. 1

4. Remove screw ② (7 screws) marked ▼ on the rear panel. (Refer to Fig. 2.)

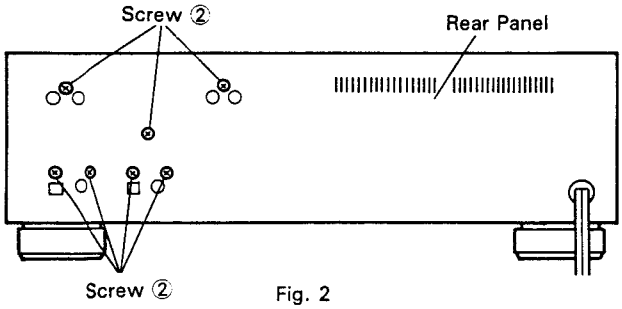

Fig. 2

5. Remove the 3 connectors (Section Ⓐ) in AUDIO unit.
6. Remove screw ③ (2 screws) and slide angled shield B toward the front of the unit and remove it (shield plate + AUDIO unit). (Refer to Fig. 3.)

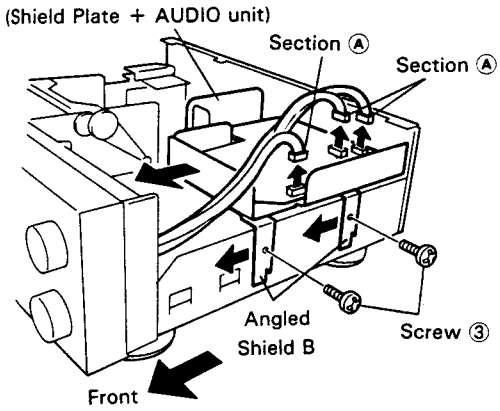

Fig. 3

7. Remove screw ④ (2 screws) on the MAIN unit.
8. While holding up the front of the MAIN unit, press down on the pin jacks from the back side and remove them from the rear panel. Then, lift out the MAIN unit.
9. While holding up the MAIN unit again, place the (shield plate + AUDIO unit) removed in Step 6 on the DAT Mecha Assy. (Refer to Fig. 4.)
   When holding up the MAIN unit, make sure you push it firmly toward the DAT Mecha Assy to avoid bumping it against the rear panel.

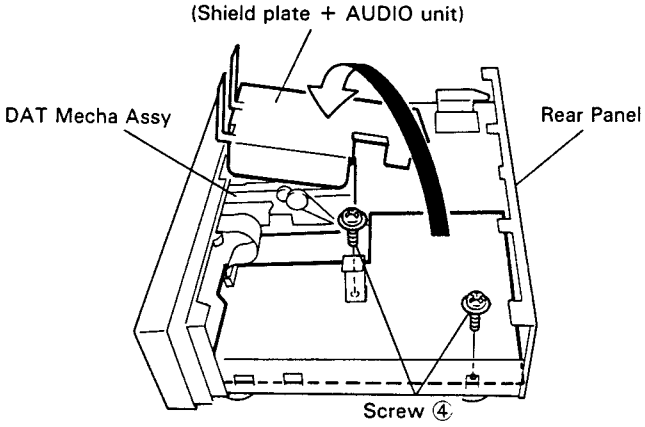

Fig. 4

10. Stand the MAIN unit up and stabilize the base against the base holder (Section Ⓑ) on the panel stay, the chassis honeycomb section, and the rear panel. (Refer to Fig. 5.)

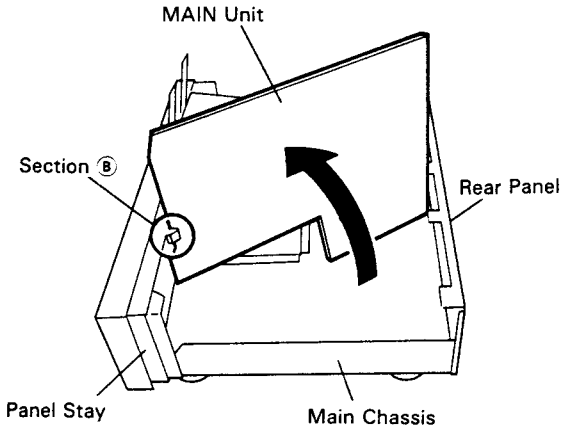

Fig. 5

6. ADJUSTMENTS

● Adjustment Conditions

1. Clean the head and tape transit surfaces (tape guide, drum, capstan shaft, and pinch roller).
2. Before making adjustments, warm up the set for a few minutes.
3. Set the signal level at 0dBV = 1Vrms.
4. Connect a 10kΩ load resistance to the audio-system line output terminal.
5. Use an oscilloscope with a 10 : 1 probe.

● Test Tapes

Tracking tape	: SDA−101 (TY−7251)
Level tape	: SDA−102 (TY−7111)
Torque meter FWD	: SDA−104 (TY−7131)
Blank tape	: SDA−301 SDA−302 (TY−30B)
Error-rate adjustment tape	: SDA−111 (SP) SDA−112 (WSP)

● Adjustment Items

Mechanical system

1. Back Tension Torque Adjustment
2. Tape Pass Confirmation
3. Tape Pass Adjustment

Electrical system

1. PLL Adjustment
2. TACH Adjustment
3. ATF Recording Current Adjustment
4. Error Rate Adjustment
5. A/D MSB Adjustment
6. A/D OFFSET Adjustment

● Setting the Test Mode

(1) 1.5 TP Test Mode

1. With the POWER SW ON, set the TIMER SW on PLAY.
2. Press the COUNTER RESET key while holding down the MUTE key.
3. At this time confirm that the counter display in the FL tube indicates "Adj".

● To cancel this test mode, press the ID MODE key or the EJECT key.

(2) Setting the 2/3 waveform

1. Enter the 1.5 TP test mode.
2. Confirm that the tracking is stable, then press the MS + (plus) key until the reproduced waveform is about 2/3. If you have gone past this value, press the MS − (minus) key and stabilize the waveform. If at this time tracking conditions are worse than what they were at the start of adjustment, press the PEAK RESET key and readjust the tracking using the MS + (plus) and − (minus) keys.

(3) Test Mode for Recording Current Adjustment

1. With the POWER SW ON, set the TIMER SW on PLAY.
2. Press the COUNTER MODE key while holding down the MUTE key.
3. At this time confirm that the P-NO display in the FL tube indicates "db".

● To cancel this test mode, press the ID MODE key.

www.hifiengine.com

■ MECHANICAL SYSTEM ADJUSTMENT

1. Back Tension Torque Adjustment

- Purpose : To stabilize the tape's contact with the rotating drum.
- Symptoms of Improper Adjustment : Small torque ⇨ Tape transit is unstable.
  Large torque ⇨ Tape or head is damaged.

Measuring Device/Jig	Measuring Device Connection	DAT State	Part to be Adjusted
● Torque Meter FWD : SDA−104 (TW−7131) ● Cassette Weight : R−2606		● PLAY mode	● Spring hook part on the reel base

Adjustment Procedure

Preparation

- Mount the torque meter (SDA−104). (At this time, place the cassette weight on the tape to prevent the tape from lifting up.)

1. Press the PLAY key and confirm that the center of the back tension torque value on the torque meter FWD is between 6.5 to 9.5g • cm.
2. If the value is not within this standard, adjust positions A to C on the reel base spring hook part.

Adjustment Diagram

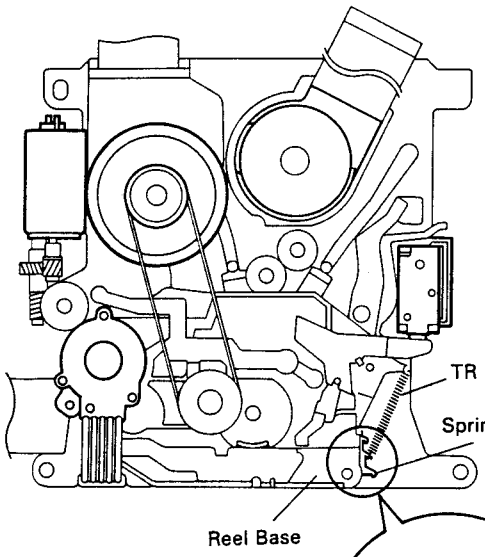

Fig. 1−1

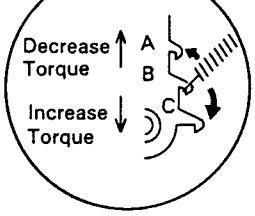

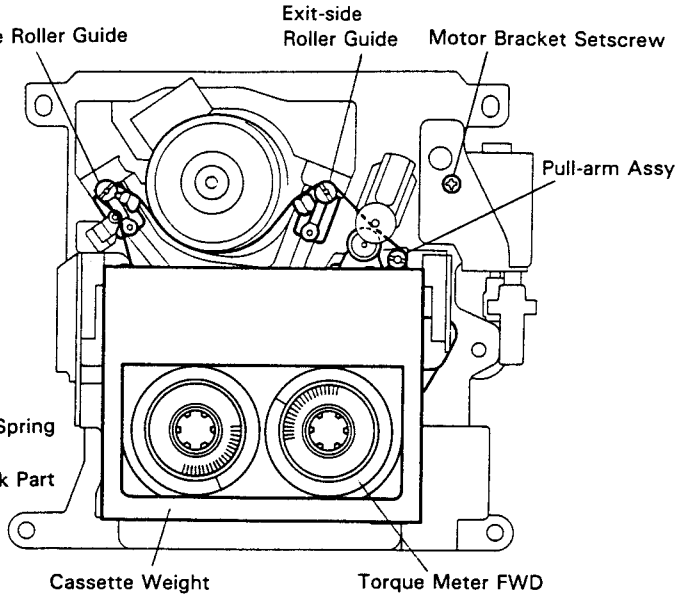

Fig. 1−2

2. Tape Pass Confirmation

- Purpose : To confirm that the tape is correctly aligned with the drum assembly lead. (Tape transit adjustment)
- Symptoms of Improper Adjustment : Sound is interrupted, noise is generated, or sound quality is poor.

Measuring Device/Jig	Measuring Device Connection	DAT State	Part to be Adjusted
• Oscilloscope • Test Tape : Tracking/ SDA−101 (TY−7251) • Cassette Weight : R−2606	• Oscilloscope MAIN unit interior : CH1 : Between ENVIN (CN22−3) and GND A (CN22−1) CH2 : Between HSWP (CN22−5) and GND A (CN22−1)	• PLAY mode (Test mode)	• Waveform check

Adjustment Procedure

Preparation

- Mount the tracking tape (SDA−101). (At this time, place the cassette weight on the tape.)
- After setting the 1.5 TP test mode, produce the 2/3 waveform and play the tape. (Refer to Page 41.)

1. Check the waveform at this time on the oscilloscope and make sure that the degree of flatness is at least 75%. (Before starting playback, confirm that the RECG3 hole on the test tape is open.)

2. If the degree of flatness is less than 75%, perform the procedures described in Sec. 3, "Tape Pass Adjustment," on Page 45.

- Degree of flatness = B/A × 100 [%] (Refer to Photo 1−1 to photo 1−3)

Adjustment Diagram

NOTE :
Confirm that the hole is open.
(RECG3: 1.5 TP tape)

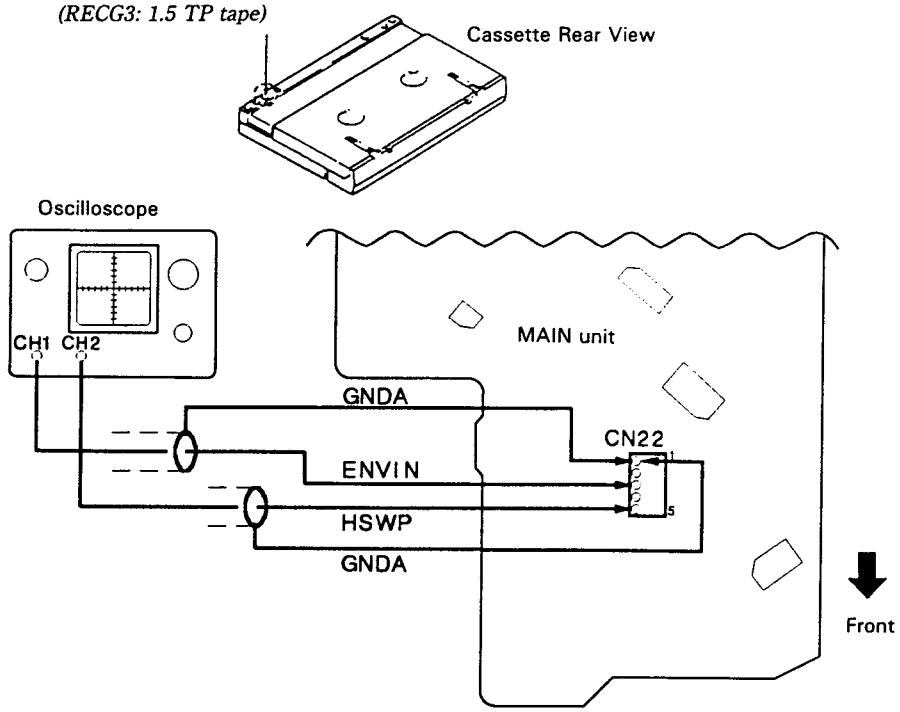

Fig. 2

Waveform

- Oscilloscope Range : 50mv/div., 1ms/div.

Normal

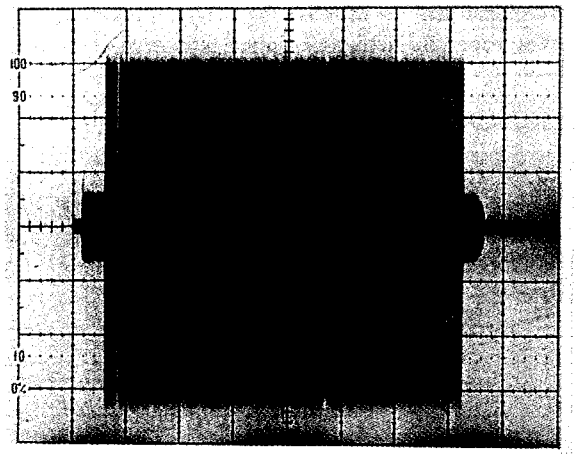

Photo 1 – 1

Fault on the Entry Side

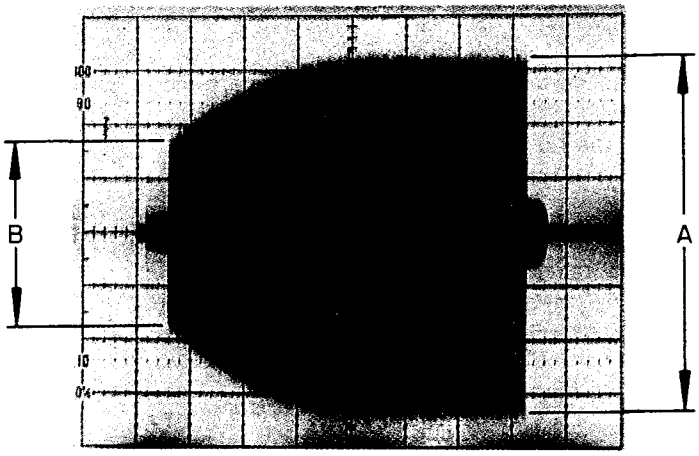

Photo 1 – 2

Fault on the Exit Side

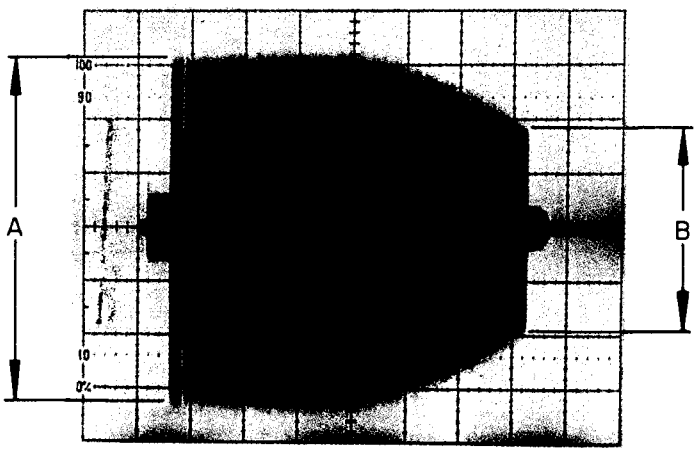

Photo 1 – 3

www.hifiengine.com

3. Tape Pass Adjustment

- Purpose : To confirm that the tape is correctly aligned with the drum assembly lead. (Tape transit adjustment)
- Symptoms of Improper Adjustment : Sound is interrupted, noise is generated, or sound quality is poor.

Measuring Device/Jig	Measuring Device Connection	DAT State	Part to be Adjusted
● Oscilloscope ● Test Tape : Tracking/ SDA−101 (TY−7251) ● Pin-face Screwdriver : R−1784 ● 0-bit Phillips Screwdriver ● Cassette Weight : R−2606	● Oscilloscope MAIN unit interior: CH1 : Between ENVIN (CN22−3) and GND A (CN22−1) CH2 : Between HSWP (CN22−5) and GND A (CN22−1).	● PLAY mode	● Roller guide (entry and exit sides) ● Pull guide

Adjustment Procedure

3−1. Rough adjustment of guides

1. Turn the entry-side / exit-side roller guides clockwise using the pin-face screwdriver (R−1784) until they lightly touch the end, and then turn them back about one rotation.
2. Turn the guide flange on the pull-arm assy until the top surface of the flange is aligned with the top of the pull-arm shaft. (Refer to Fig. 3−1.)

3−2. Fine adjustment of roller guide height

Preparation

- Mount the tracking tape (SDA−101). (At this time, place the cassette weight on the tape.)
- After setting the 1.5 TP test mode, produce the 2/3 waveform and play the tape. (Refer to Page 41.)
- At this time, confirm that the RECG3 hole on the cassette tape is open. (Refer to Fig. 3−2.)

[Exit-Side Adjustment]

1. Inspect the RF waveform. If it resembles the waveform shown in Photo 2−4, tighten the exit-side roller guide (about 1/8 rotation). If it resembles the waveform shown in Photo 2−6, loosen the exit-side roller guide (about 1/8 rotation).

[Entry-Side Adjustment]

2. Inspect the RF waveform. If it resembles the waveform shown in Photo 2−3, tighten the entry-side roller guide (about 1/4 rotation). If it resembles the waveform shown in Photo 2−5, loosen the entry-side roller guide (about 1/4 rotation).
3. Observe the RF waveform and repeat Steps 1 and 2 above until the waveform looks like the one shown in Photo 2−2.
4. Securely tighten the roller guide lock screw, locking the guide in place.
5. Press the OPEN/CLOSE key, and once the tape has been ejected, repeat the procedures described in Sec. 2, "Tape Pass Confirmation". (Refer to Page 43.)

Adjustment Diagram

- The oscilloscope connections and other connections are as indicated in Sec. 2, "Tape Pass Confirmation" (Page 43).

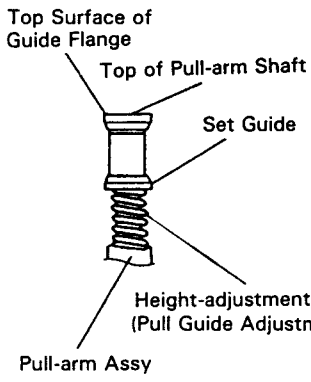

Fig. 3−1

NOTE :
Confirm that the hole is open. (RECG3: 1.5TP tape)

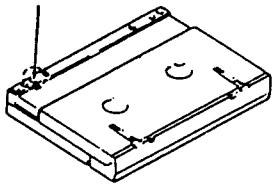

Cassette Tape Rear View

Fig. 3−2

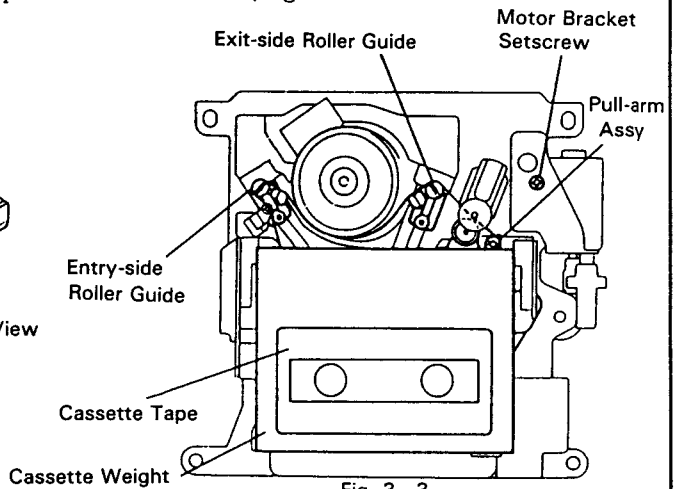

Fig. 3−3

Waveform

- Oscilloscope Range : 50mv/div., 1ms/div.

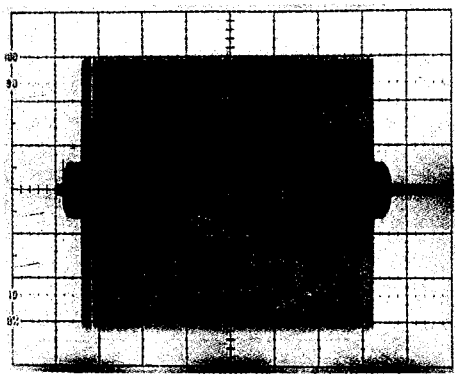

Photo 2−1
Maximum RF Output Level

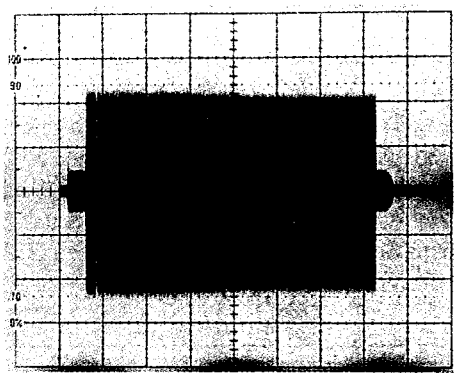

Photo 2−2
2/3 RF Output Level

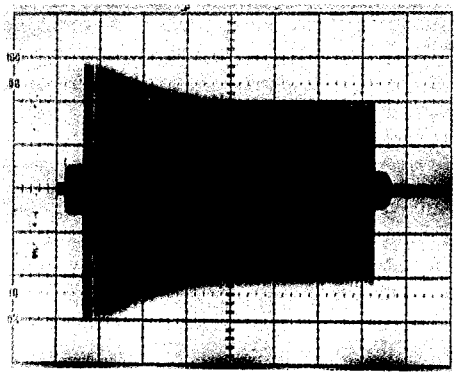

Photo 2−3
Entry-Side Guide Roller Too High

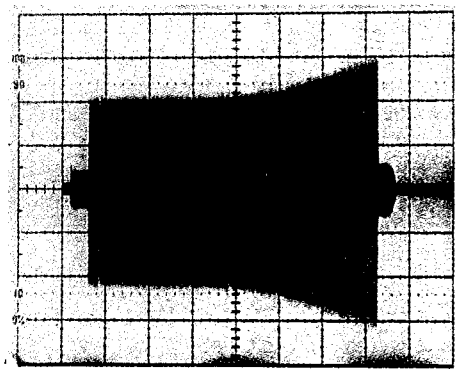

Photo 2−4
Exit-Side Guide Roller Too High

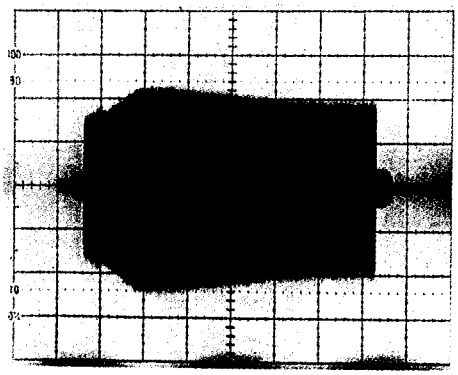

Photo 2−5
Entry-Side Guide Roller Too Low

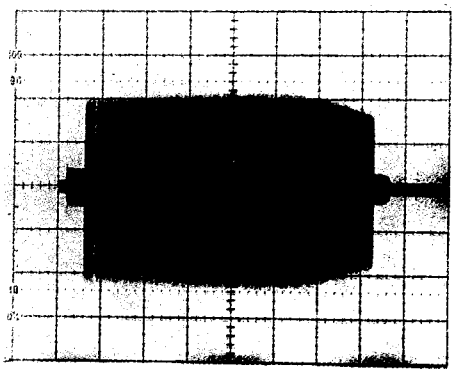

Photo 2−6
Exit-Side Guide Roller Too Low

www.hifiengine.com

3−3. Fine Adjustment of Pull Guide

1. Play the tape and set the CUE mode by holding down the FF/CUE key when the tape starts winding. Check for twisting of the tape between the pinch roller and the pull guide by observing the image of the motor bracket setscrew head reflected on the magnetic surface of the tape. The relationship between the reflected image of the screw head and the height of the pull-guide flange is shown in Fig. 3−4.
2. Slowly tighten the pull-guide flange, turning it 180 degrees from its rough-adjusted position, and confirm that the appearance of the reflected image continuously changes from (c) to (a) during this process.
3. Then, while loosening the pull-guide flange 180 degrees, confirm that the appearance of the reflected image continuously changes from (a) to (c).
4. Tighten the pull-guide flange until the top edge of the tape curls slightly and the screw image resembles the shape shown in (b), and then loosen the flange 90 degrees.
5. Set the REW mode by pressing and holding down the REW/REV key. Confirm that the tape does not curl at Points A and B in Fig. 3−5.
6. After confirming that the tape is not twisted at Point C in Fig. 3−6, check the tape for twisting or bulging at Point D. (Normal bulge : no more than 0.5mm)
7. Press the OPEN/CLOSE key and eject the tape. Replay the tape, and keeping the FF/CUE key pressed down, observe the reflected image of the screw head and confirm that it has the same appearance as that shown in (c).
8. Press and hold down the REW/REV key and confirm that curling and twisting at Points A to D are the same.
9. Apply a locking adhesive to the screw on top of the pull-guide flange and lock the screw.

Adjustment Diagram

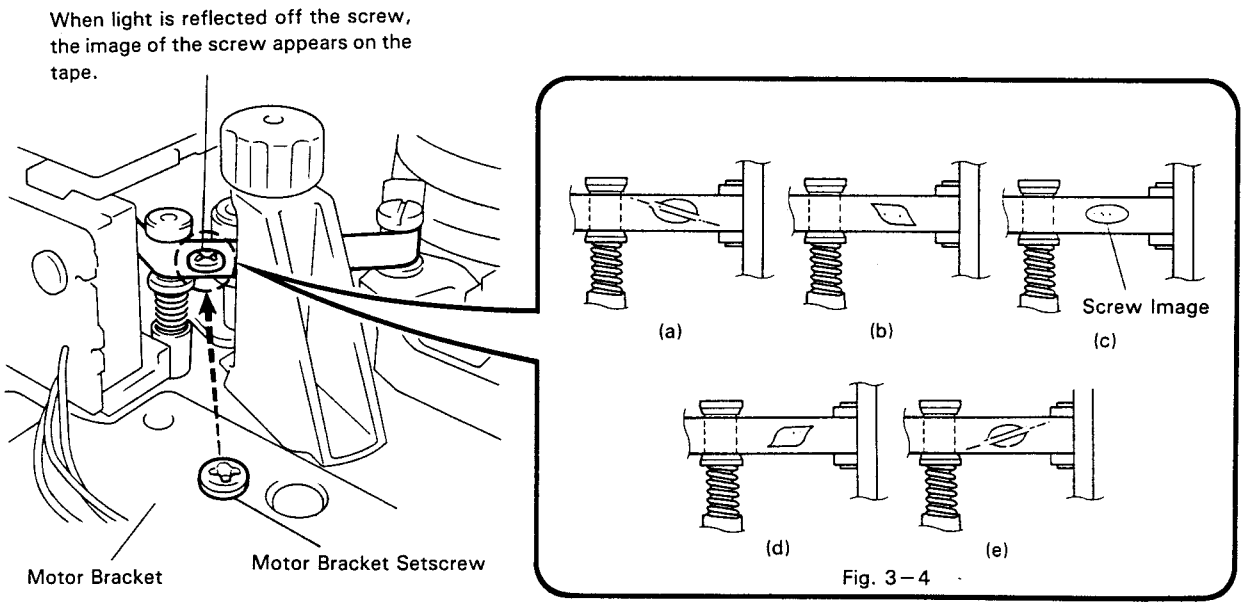

Fig. 3−4

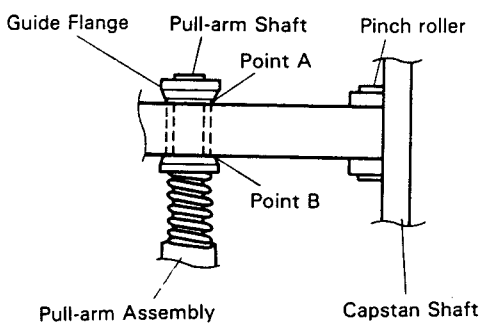

Fig. 3−5

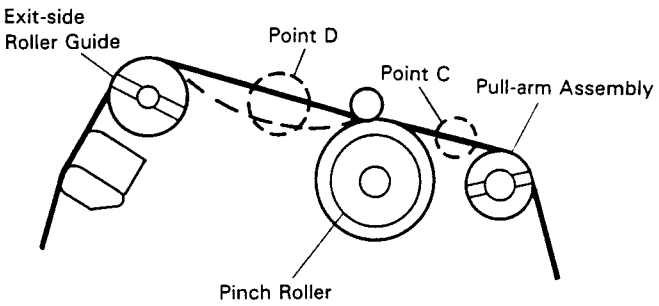

Fig. 3−6

■ ELECTRICAL SYSTEM ADJUSTMENT

1. PLL Adjustment

- Purpose : To correctly access digital signals stored in the tape.
- Symptoms of Improper Adjustment : Sound is intermittent, unit does not playback, noise is generated, or meter fails to oscillate.

Measuring Device/Jig	Measuring Device Connection	DAT State	Part to be Adjusted
● Oscilloscope ● Test Tape Blank Tape : SDA−301	● Oscilloscope MAIN unit interior : CH1 : Between PHSUB (CN23−4) and GND D (CN23−1)	● STOP mode	● MAIN unit VR501

Adjustment Procedure

1. Insert the test tape.
2. Adjust the output voltage of the CN23−4 (PHSUB) to 2.5V. (At this time, if the beard-shaped pulses in the waveform are just slightly visible or disappear completely, adjust the voltage above or below 2.5V.)

Adjustment Diagram

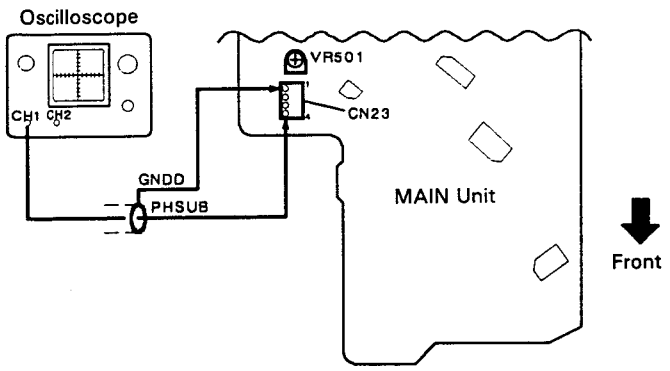

Fig. 4

Waveform

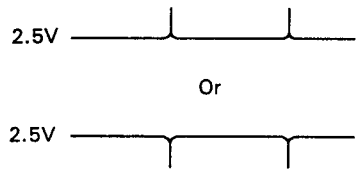

- If the beard-shaped pulses in the waveform are just slightly visible or disappear completely, adjust the voltage above or below 2.5V.

2. TACH Adjustment

- Purpose : To match the recording position with the tape format.
- Symptoms of Improper Adjustment : Tapes recorded on other machines have intermittent sound or noise increases and the MUTE comes on. (Tapes recorded on this unit perform without problems.)

Measuring Device/Jig	Measuring Device Connection	DAT State	Part to be Adjusted
• Oscilloscope • Test tape Tracking : SDA−101 (TY−7251)	• Oscilloscope MAIN unit interior : CH1 : Between ENVIN (CN22−3) and GND A (CN22-1) CH2 : Between HSWP (CN22−5) and GND A (CN22−1)	• PLAY mode (Test mode)	• MAIN unit VR601

Adjustment Procedure

Preparation

- Set the SP mode.
- Set the 1.5 TP test mode. (Refer to Page 41.)

1. Adjust the position of the RF waveform marker so that it is 800μs ± 20μs from the start of the TACH waveform.

Waveform

- Oscilloscope Range :
  CH1 : 500mV/div., 200μs/div.
  CH2 : 2V/div. (Trigger)

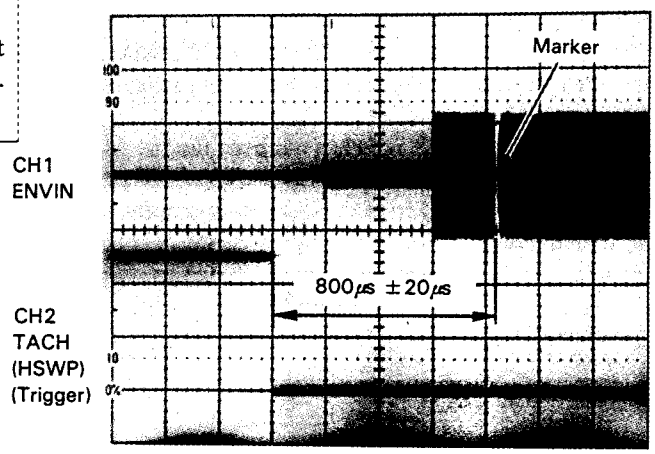

Photo 3−1

Adjustment Diagram

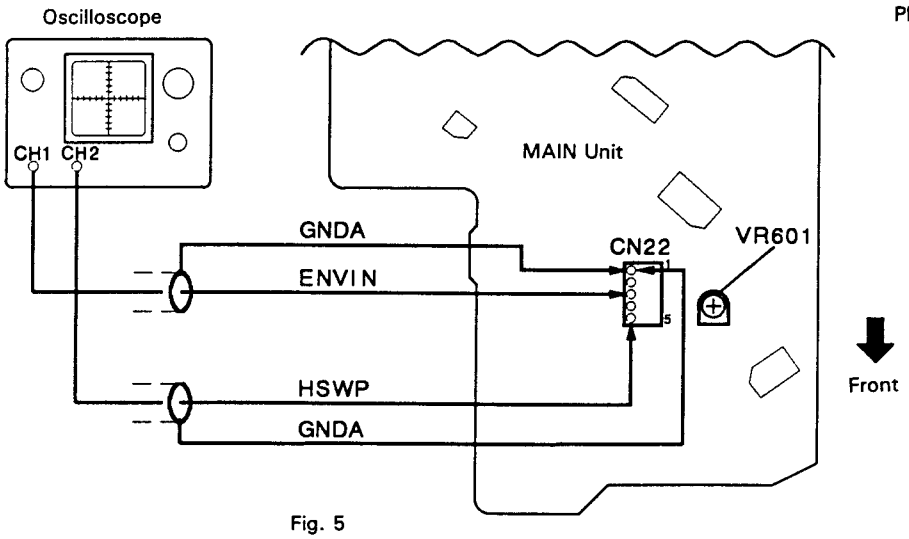

Fig. 5

3. ATF Recording Current Adjustment.

- Purpose : To obtain the ideal recording current value.
- Symptoms of Improper Adjustment : Sound is intermittent (tracking cannot be obtained) or noise is generated.

Measuring Device/Jig	Measuring Device Connection	DAT State	Part to be Adjusted
● Oscilloscope ● Test Tape Level : SDA−102 (TY−7111) Blank : SDA−302 (TY−30B) *NOTE :* *Use an unused portion of tape where RF signals have not been recorded.*	● Oscilloscope MAIN Unit interior : CH1 : Between PLT2 (CN22−4) and GND A (CN22−1) CH2 : Between HSWP (CN22−5) and GND A (CN22−1)	● PLAY and REC modes	● RF unit VR305 (A head) VR302 (B head)

Adjustment Procedure

Preparation

- Set the test mode for adjustment of recording current. (Refer to Page 41.)

1. Play the level-use test tape (SDA−102) and record the voltage value at Points (a) and (b) on the waveform. (Refer to Photo 4−1.)
2. Confirm that the blank tape has not been used or has an unused portion. Press the REC key and then the PAUSE key. Record the signal from the unit's built-in transmitter on the tape for 30 to 60 seconds.
3. Stop the recording and rewind the recorded portion of the tape. Confirm that the levels of the reproduced waveform are within $\pm \frac{25}{20}$ % of levels (a) and (b) recorded according to the procedure described in Step 1. (Refer to Photo 4−2.)
4. When the values are outside the standard, slightly turn VR305 for A head or VR302 for B head, and record the signal again on an unused portion of tape. Confirm the levels as described in Step 3.
5. Repeat Steps 3 and 4 and make adjustments until the values are within the standard.

Adjustment Diagram

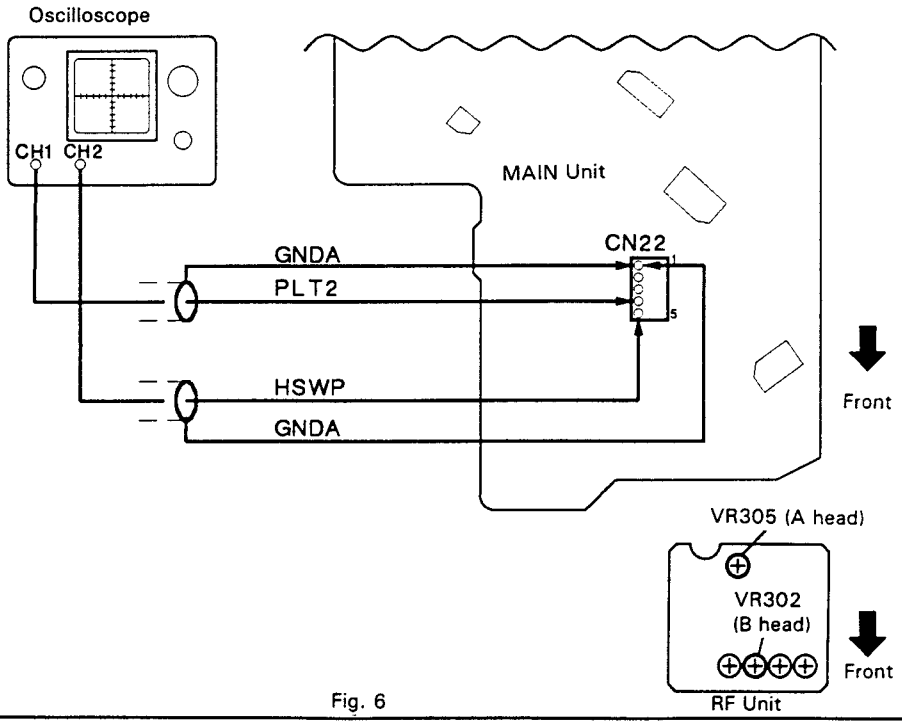

Fig. 6

Waveform

- Oscilloscope Range : CH1: 0.5V/div., 2.5mS/div.
  CH2 : 5V/div.

[ ] : Reference

During Playback of Level Tape (SDA−102)

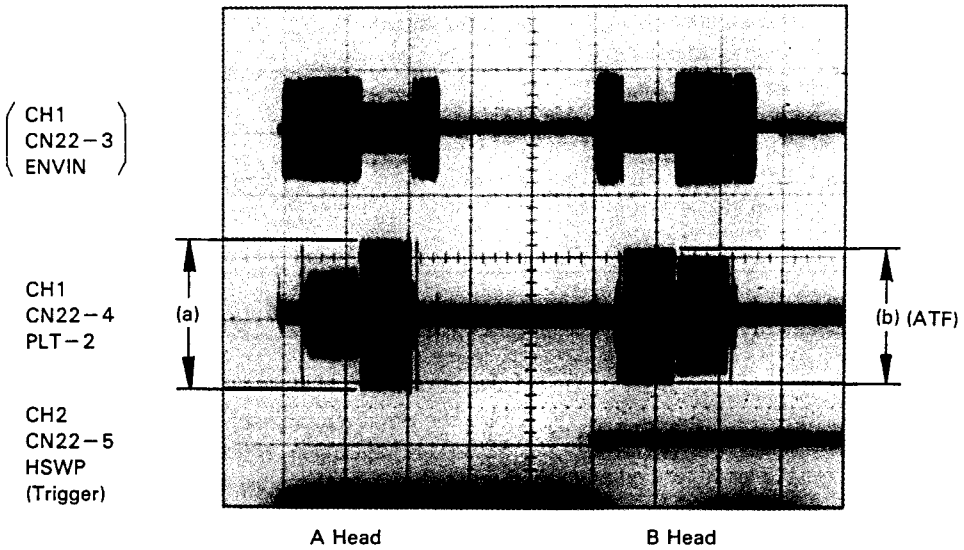

Photo 4−1

During Playback of Self-recorded Blank Tape

- Oscilloscope Range : CH1 : 0.5V/div., 3mS/div. (PCM)
  [CH1 : 100mV/div., 3mS/div.] (ATF)
  CH2 : 5V/div.

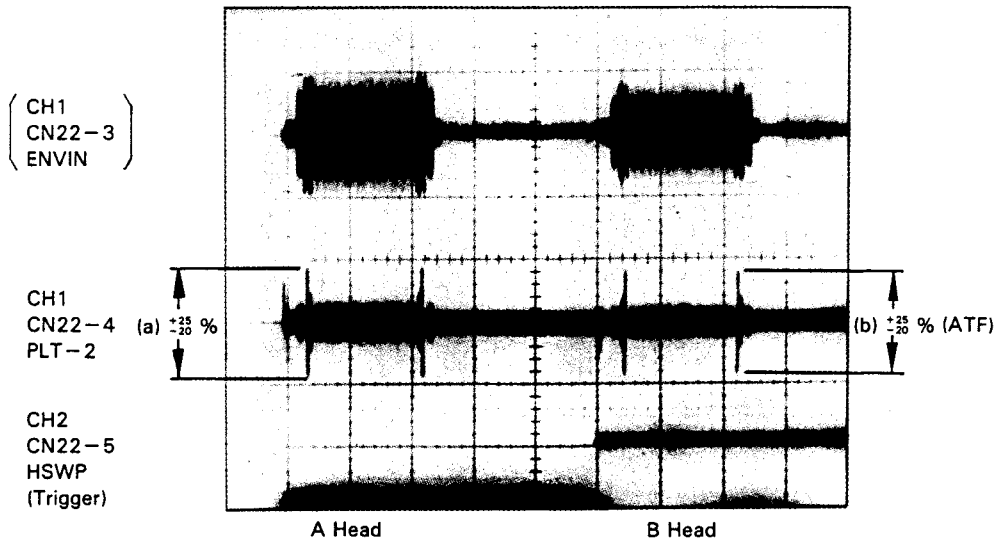

Photo 4−2

www.hifiengine.com

4. Error Rate Adjustment

- Purpose : To reproduce the correct data.
- Symptoms of Improper Adjustment : Units skips during playback, noise is generated, or meter does not oscillate.

Measuring Device/Jig	Measuring Device Connection	DAT State	Part to be Adjusted
● Test Tape Error Rate Adjustment Tape : SDA−111 (SP) : SDA−112 (WSP) ● Error Rate Counter [● Oscilloscope]	● Error rate counter MAIN unit interior Connector : CN24 ● Oscilloscope MAIN Unit interior : CH1 : Between FLAG (CN24−3) and GND D (CN24−1)	● PLAY mode	● RF unit VR303 (SP) VR304 (WSP)

Adjustment Procedure

Preparation

- Connect the error rate counter connector to CN24 inside the signal processing unit and set the error rate counter timer at 10sec.

1. Play the error rate adjustment tapes (SDA−111 and SDA−112) and make adjustments so that the error rate is as small as possible.

[If the error rate counter is not used]

1. Play the error rate adjustment tapes (SDA−111 and SDA−112) and make adjustments so that the oscilloscope waveform error flag is the same as that shown in Photo 5. (Adjust until the error rate is as small as possible.)

Adjustment Drawing

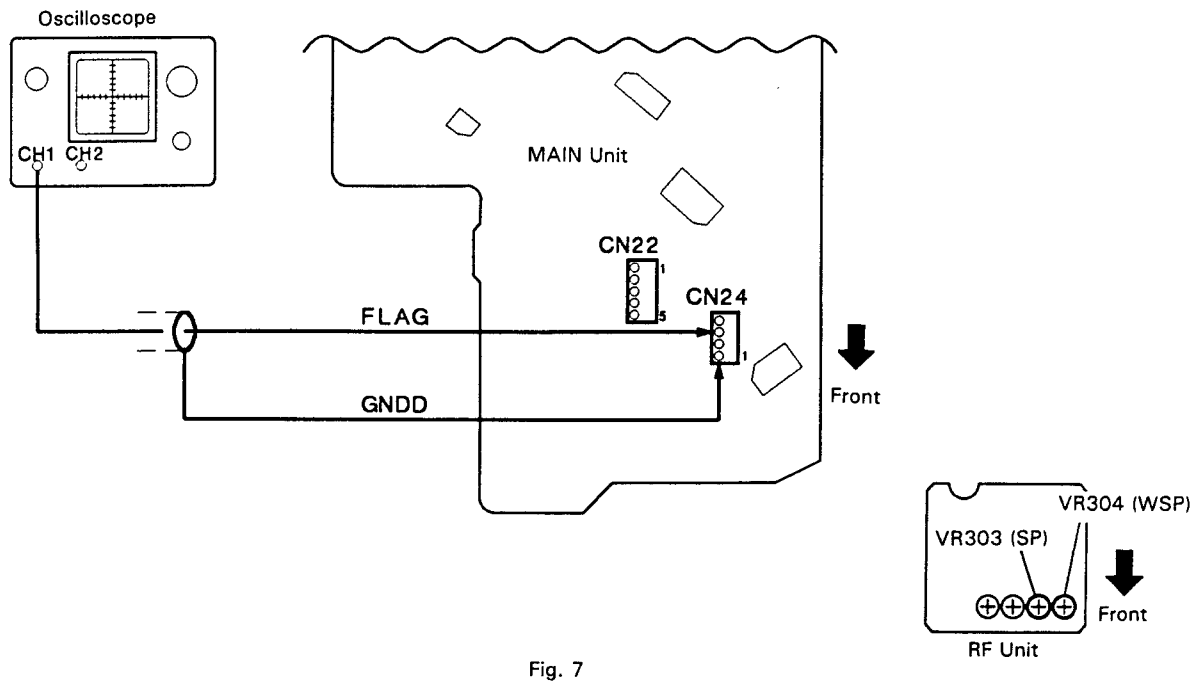

Fig. 7

Waveform

- Oscilloscope Range : 2v/div., 5ms/div.
  [During SP]

When error rate is 1×10^{-1}

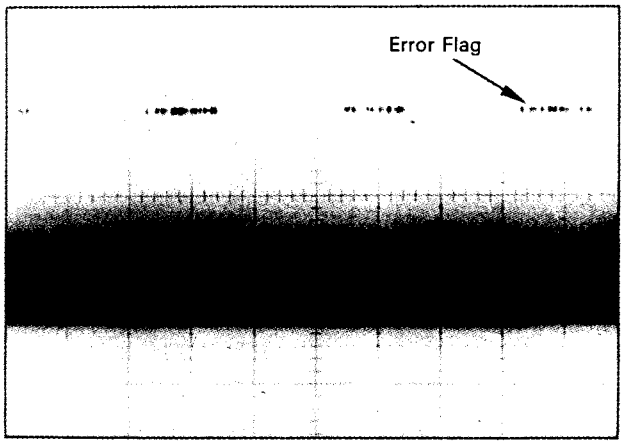

Photo 5－1

When error rate is 2×10^{-2}

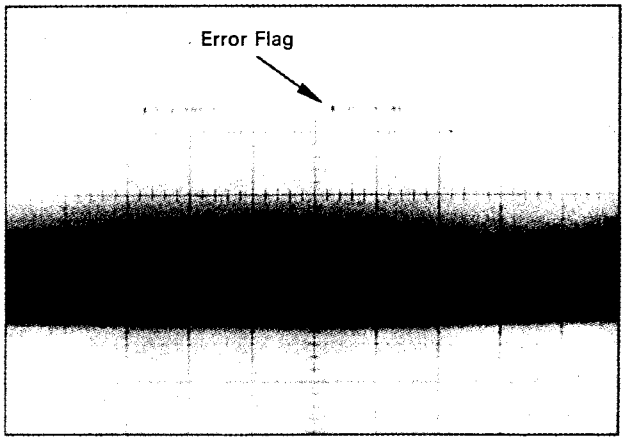

Photo 5－2

When error rate is 5×10^{-4}

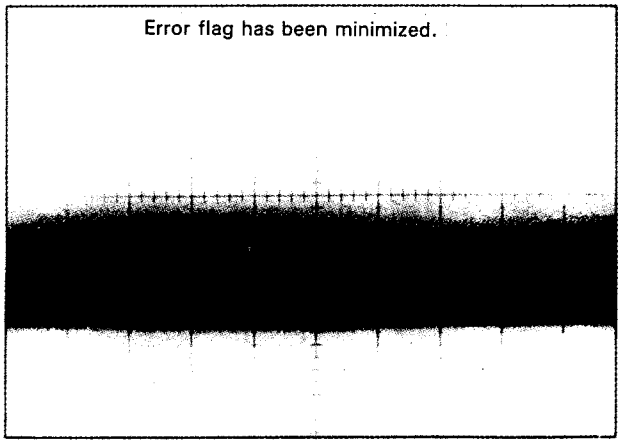

Photo 5－3

www.hifiengine.com

5. A/D MSB Adjustment

- Purpose : To adjust MSB produced at 60dB on the A/D converter. (Zero-cross adjustment)
- Symptoms of Improper Adjustment : Distortion rate and dynamic range deteriorate.

Measuring Device/Jig	Measuring Device Connection	DAT State	Part to be Adjusted
• Test Tape Blank : SDA−301 • Oscillator • AC Voltmeter • Oscilloscope • Distortion Meter (400Hz HPF, 20kHzLPF = ON)	• LINE OUT (Lch, Rch) • Oscilloscope AUDIO unit interior: CH1 : Between DATAL (CN18−2) and GND (CN18−1) [CH1 : Between DATAR (CN18−4) and GND (CN18−1)] CH2 : Between CC (CN18−3) and GND (CN18−1)	• REC/PAUSE mode	• AUDIO Unit VR701 (Lch) VR702 (Lch) VR801 (Rch) VR802 (Rch)

Adjustment Procedure

Preparation

- Set the SP mode and short-circuit CN19.
- Connect components as shown in Fig. 8 and set the switch on ①.

NOTE : Start at Step 1 for Lch and Rch separately.

1. With the unit in REC/PAUSE mode, input a 1kHz : +6dBV signal from the oscillator, and using the INPUT volume, adjust the level meter on the set so that 0dB is illuminated. (At this time, increase the volume until just before the LINE OUT waveform starts to clip.)
2. Short-circuit CN19 and lower the oscillator output to 60dB. Activate the VR701 (Lch) and VR801 (Rch) and adjust them to the offset value at which MSB will invert without fail.
3. Set the switch on ② in Fig. 8 and the AC voltmeter at −60dB. Set the distortion meter to DISTORTION mode. (Used by the amp in the AC voltmeter.)
4. Adjust VR702 (Lch) and VR802 (Rch) so that the LINE OUT distortion at this time is as small as possible (no larger than 4.5%).
5. After adjusting in Sec 6, "A/D OFFSET Adjustment", recheck the distortion; repeat adjustments until the distortion value is within the above standard.

Adjustment Drawing

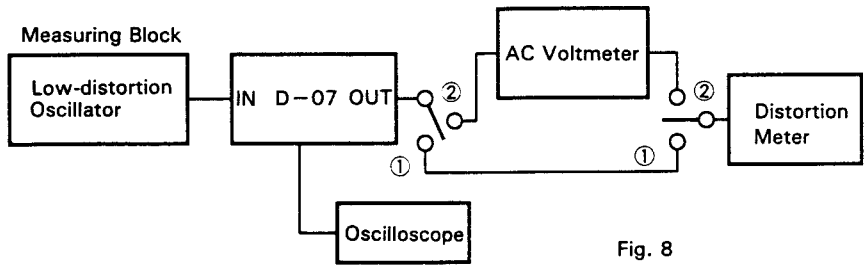

Fig. 8

Waveform

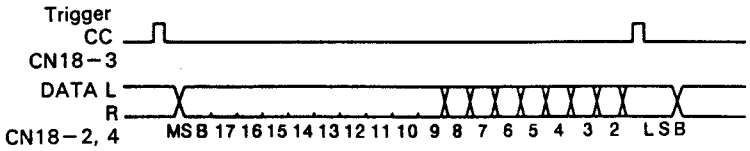

Set the MSB so that it outputs both L and H as shown above. When conditions similar to those shown below occur, adjust VR701 and VR801 so that the conditions shown above are obtained.

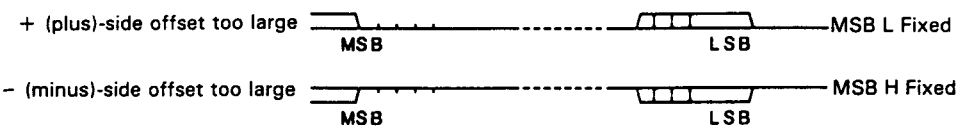

6. A/D OFFSET Adjustment

- Purpose : To adjust the A/D converter offset.
- Symptoms of Improper Adjustment : S/N is lost or level meter lights up during signalless recording.

Measuring Device/Jig	Measuring Device Connection	DAT State	Part to be Adjusted
● Test Tape Blank : SDA−301 ● Oscilloscope	● Oscilloscope AUDIO unit interior : CH1 : Between DATAL (CN18−2) and GND (CN18−1) [CH1 : Between DATAR (CN18−4) and GND (CN18−1)] CH2 : Between CC (CN18−3) and GND (CN18−1)	● REC/PAUSE mode	● AUDIO Unit VR701 (Lch) VR801 (Rch)

Adjustment Procedure

Preparation

- Set the SP mode.
- Terminate the LINE IN terminal on the set at 600Ω.

1. After inserting the test tape (blank : SDA−301) and setting the REC/PAUSE mode, adjust the Lch by setting the balance VR Rch to MAX. To adjust the Rch, set the Lch on the balance VR to MAX.
2. Observe the waveform produced at this time and adjust both the Lch and Rch so that the waveform low-order 8-bit division starts to move from "L" to "H" that is, until the waveform of the 8-bit division is faintly visible. (At this time, set the "L" level between 18-bit MSB and the 9-bit division ; the range below 7-bits can be either "L" or "H".)
3. After completing adjustments, confirm the A/D MSB adjustment distortion rate (maximum 4.5%) and make sure that the distortion rate variation is within ±1dB.

Adjustment Drawing

Measuring Block

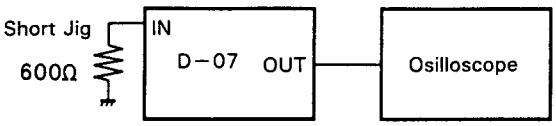

Waveform

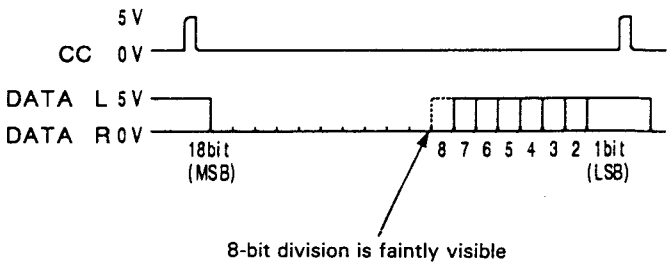

Fig. 9

7. IC INFORMATION

- *The information shown in the list is basic information and may not correspond exactly to that shown in the schematic diagrams.*

■ HD49226AFS (MAIN UNIT : IC501)

● One Chip Signal Processing LSI for R-DAT

- BLOCK DIAGRAM

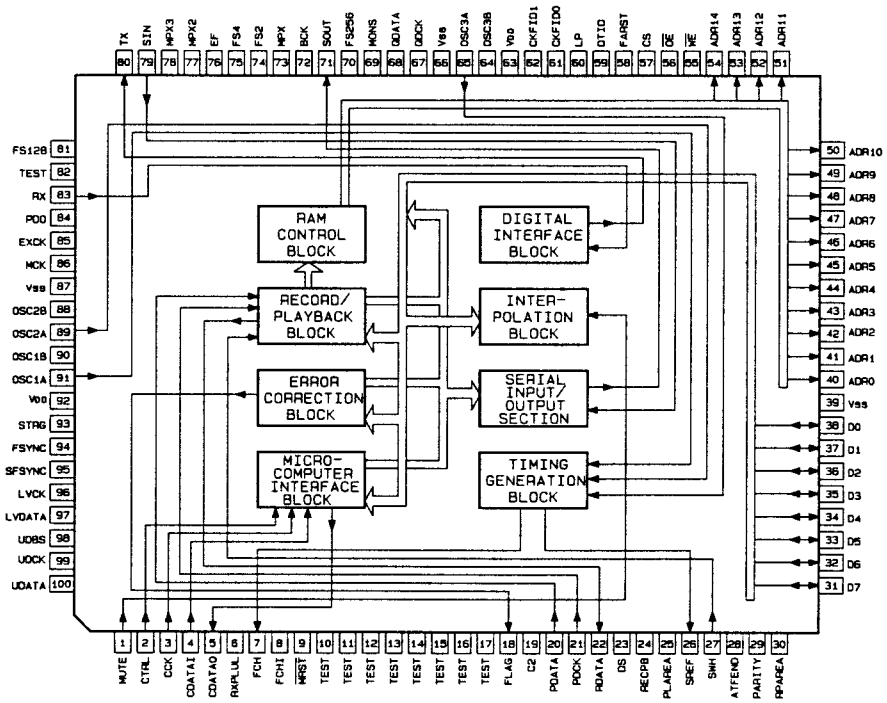

- Pin Function

No.	Symbol	Pin Name	I/O	Function	Polarity	
					H	L
1	MUTE	Mute	I	MUTE control signal	Enable	Norm
2	CTRL	Control	I	Microcomputer data transmission mode input control signal		
3	CCK	Microcomputer Data Clock	I	Microcomputer transmission data synchronous clock input		
4	CDATAI	Microcomputer Data Input	I	Microcomputer transmission data input		
5	CDATAO	Microcomputer Data Output	O	Microcomputer transmission data output		
6	RXPLUL	RX PLL Unlock	O	LOCK/UNLOCK output during RX input	UN LOCK	LOCK
7	FCH	Channel Frequency	O	Channel clock output (18.816/9.408/4.704MHz)		
8	FCHI	Channel Frequency Input	I	Channel clock input		
9	$\overline{\text{MRST}}$	$\overline{\text{Master Reset}}$	I	Master reset	Norm	RST
10	TEST	–	I			
11	TEST	–	I			

No.	Symbol	Pin Name	I/O	Function	Polarity	
					H	L
12 | 17	TEST	——	–	——		
18	FLAG	Error Flag	O	Correction flag output		
19	C2	C2 Area	O	C2 correction area output		
20	PDATA	Playback Data	I	Playback signal input		
21	PDCK	Playback Data Clock	I	Playback signal synchronous clock input		
22	RDATA	Rec Data	O	Record signal output		
23	DS	Drum Select	I	Drum diameter select	Standard	Small diameter
24	RECPB	Rec Playback Select	O	Record/playback control signal output	REC	PB
25	PLAREA	Pilot Area	O	ATF pilot signal record area output	AREA	
26	SREF	Servo Reference	O	Servo reference signal		
27	SWH	Switch Head	I	Head switch signal input		
28	ATFEND	ATF End	I	ATF area detector signal input		
29	PARITY	Parity	O	Parity detection results output	OK	
30	RPAREA	REC PLAY AREA	O	Record/playback area		
31 | 38	D7 | D0	Data7 | Data0	I/O	RAM data input/output		
39	Vss	Vss	–	GND		
40 | 54	ADR0 | ADR14	Address0 | Address14	O	RAM address output		
55	$\overline{WE}$	$\overline{\text{Write Enable}}$	O	Ram write-enable signal	INH	EN
56	$\overline{OE}$	$\overline{\text{Output Enable}}$	O	RAM output-enable signal		
57	CS	Chip Select	O	RAM chip select	INH	EN
58	FARST	Frame Address Reset	I	Frame address reset	Norm	RST
59	DTID	Data ID Select	I	Data ID select	0	8
60	LP	LP Mode Select	O	LP mode select when DS = H	Half speed	W
				Small-diameter drum select when DS = L	15mmφ	20mmφ
61	CKFID0	Clock Fidelity 0	I	TX clock fidelity control input		
62	CKFID1	Clock Fidelity 1	I			
63	VDD	VDD	–	Power supply		
64	OSC3B	Oscillator 3B	O	37. 632MHz/18. 816MHz oscillator circuit		
65	OSC3A	Oscillator 3A	I			
66	Vss	Vss	–	GND		
67	QDCK	Q DATA Clock	I	CD Q data clock input		

www.hifiengine.com

No.	Symbol	Pin Name	I/O	Function	Polarity	
					H	L
68	QDATA	Q DATA Out	O	CD Q data output		
69	MONS	MONITOR Select	I	Monitor select during playback	PB	REC
70	FS256	FS256	O	fs clock × 256		
71	SOUT	Serial Out	O	Serial signal output		
72	BCK	bit clock	O	Serial input/output bit synchronous clock		
73	MPX	Multiplexer	O	Input/output L/R discriminating signal output	R	L
74	FS2	FS2	O	FS × 2 output		
75	FS4	FS4	O	FS × 4 output		
76	EF	Error Flag	O	Interpolation flag output	NG	OK
77	MPX2	MPX2	O	Input/output L/R discriminating signal output (I^2 S equivalent)	R	L
78	MPX3	MPX3	O	Input/output L/R discriminating signal output (front padded equivalent)		
79	SIN	Serial Input	I	Serial signal input		
80	TX	TX	O	Digital interface output		
81	FS128	FS128	O	fs clock × 128 (digital interface synchronous clock)		
82	TEST	–	I	———		
83	RX	RX	I	Digital interface input		
84	PDO	Phase Detector Output	O	Phase comparator output		
85	EXCK	External Clock	I	External master clock input		
86	MCK	Master Clock	O	Master clock output		
87	Vss	Vss	–	GND		
88	OSC2B	Oscillator 2B	O	11. 2896MHz/22. 5792MHz oscillator output		
89	OSC2A	Oscillator 2A	I			
90	OSC1B	Oscillator 1B	O	12. 288MHz/24. 576MHz oscillator output		
91	OSC1A	Oscillator 1A	I			
92	VDD	VDD	–	Power source		
93	STRG	Sync Trigger	I	Frame synchronous signal input		
94	FSYNC	Frame Sync	O	Frame synchronous signal output		
95	SFSYNC	SERVO Frame Sync	O	Servo frame synchronous signal		
96	LVCK	Level Meter Clock	I	Level meter data clock input		
97	LVDATA	Level Meter Data	O	Level meter data output		
98	UDBS	U Data Block Sync	O	RX input U-bit data synchronous output		
99	UDCK	U Data Clock	O	RX input U-bit data synchronous clock output		
100	UDATA	U Data	O	RX input U-bit data output		

www.hifiengine.com

■ HA12154MA (RF UNIT : IC301)

● RF Record/Playback AMP

● Block Diagram

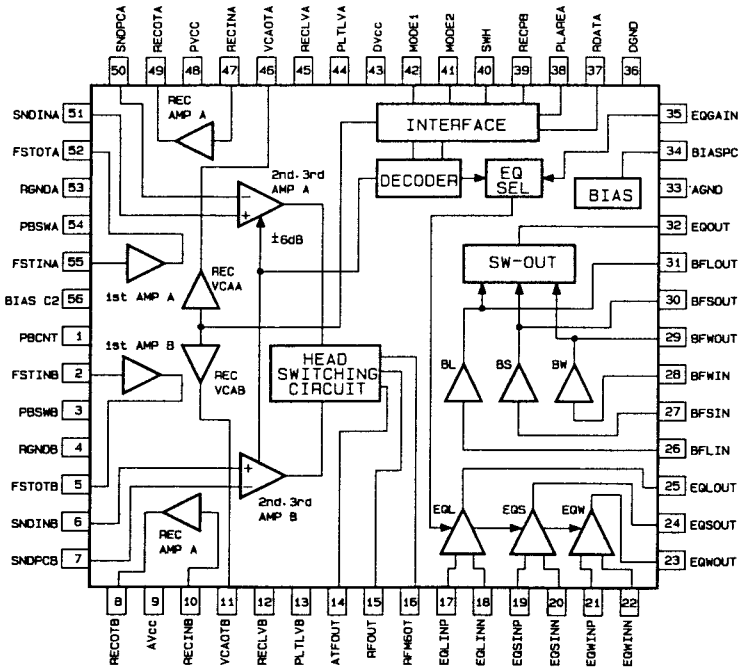

● Pin Function

No.	Pin Name	I/O	Function
1	PBCNT	–	1st amp ON/OFF transistor base terminal
2	FSTINB	I	Bch 1st amp input terminal
3	PBSWB	–	Bch 1st amp ON/OFF transistor collector terminal
4	RGNDB	–	GND terminal
5	FSTOTB	O	Bch 1st amp output terminal
6	SNDINB	I	Bch 2nd amp input terminal
7	SNDPCB	–	Bch 2nd amp bypass capacitor connection terminal
8	RECOTB	O	Bch REC amp output terminal
9	AVcc	–	Analog system power terminal
10	RECINB	I	Ach REC amp input terminal

No.	Pin Name	I/O	Function
11	VCAOTB	O	Bch REC VCA output terminal
12	RECLVB	–	Resistor connection terminal for setting Bch PCM area record level
13	PLTLVB	–	Resistor connection terminal for setting Bch ATF PILOT area record level
14	ATFOUT	O	Preamp output terminal for ATF servo
15	RFOUT	O	Preamp output terminal
16	RFM6OT	O	1/2 divider output terminal for equalizer
17	EQLINP	I	EQL amp positive-side input terminal
18	EQLINN	I	EQL amp negative-side input terminal
19	EQSINP	I	EQS amp positive-side input terminal

www.hifiengine.com

No.	Pin Name	I/O	Function
20	EQSINN	I	EQS amp negative-side input terminal
21	EQWINP	I	EQW amp positive-side input terminal
22	EQWINN	I	EQW amp negative-side input terminal
23	EQWOUT	O	EQW amp output terminal
24	EQSOUT	O	EQS amp output terminal
25	EQLOUT	O	EQL amp output terminal
26	BFLIN	I	Buffer amp input terminal
27	BFSIN	I	
28	BFWIN	I	
29	BFWOUT	O	Buffer amp output terminal
30	BFSOUT	O	
31	BFLOUT	O	
32	EQOUT	O	SWOUT output terminal
33	AGND	–	Analog system GND terminal
34	BIASPC	–	Bypass capacitor connection terminal for bias circuit
35	EQGAIN	–	Resistor connection terminal for setting EQ amp gain
36	DGND	–	Digital system GND terminal
37	RDATA	I	Record data input terminal
38	PLAREA	I	Record level select signal input terminal for ATF PILOT area "High": ATF PILOT area "Low": other
39	RECPB	I	Record/playback select signal input terminal "High": Record "Low": Playback
40	SWH	I	Head select signal input "High": Bch "Low": Ach
41	MODE2	I	LP/SP/WSP mode select
42	MODE1	I	

	MODE1	MODE2
LP	O	I
SP	O	O
WSP	I	O

No.	Pin Name	I/O	Function
43	DVcc	–	Digital system power terminal
44	PLTLVA	–	Resistor connection terminal for setting Ach ATF PILOT area record level
45	RECLVA	–	Resistor connection terminal for setting Ach PCM area record level
46	VCAOTA	O	Ach REC VCA output terminal
47	RECINA	I	Ach REC amp input terminal
48	PVCC	O	Base bypass output terminal
49	RECOTA	O	Ach REC amp output terminal
50	SNDPCA	–	Ach 2nd amp bypass capacitor connection terminal
51	SNDINA	I	Ach 2nd amp input terminal
52	FSTOTA	O	Ach 1st amp output terminal
53	RGNDA	–	GND terminal
54	PBSWA	–	Ach 1st amp ON/OFF transistor corrector terminal
55	FSTINA	I	Ach 1st amp input terminal
56	BIAS C2	–	Bypass capacitor connection terminal for bias circuit

www.hifiengine.com

■ HG62E43B93FS (MAIN UNIT : IC512)

● Digital Fader IC

● Block Diagram

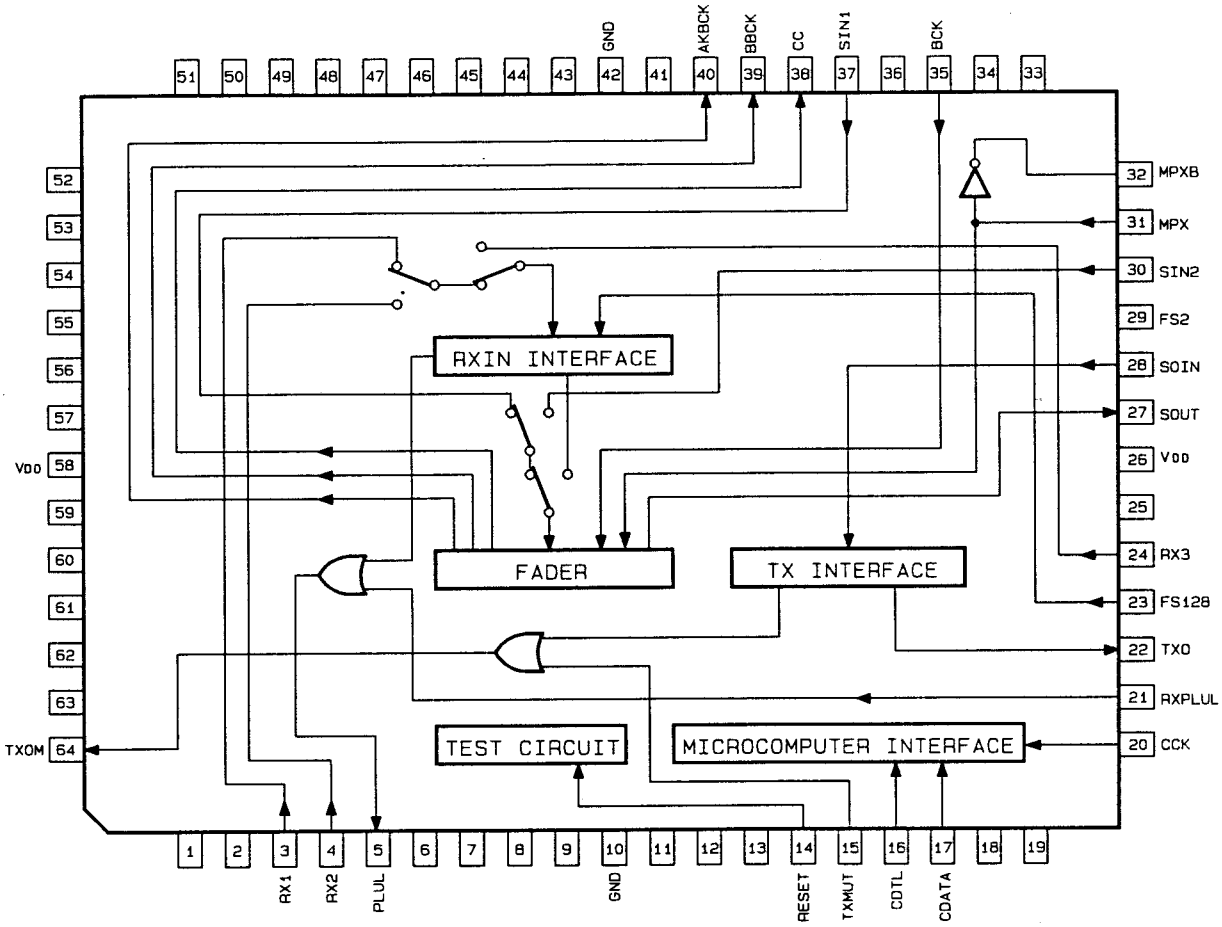

● Pin Function

No.	Pin Name	I/O	Function	Polarity	
				H	L
1	–	–	NC		
2	–	–	NC		
3	RX1	I	Digital audio interface input, CH1		
4	RX2	I	Digital audio interface input, CH2		
5	PLUL	O	PLL unlock detector output	Unlock	Lock
6	–	–	NC		

www.hifiengine.com

No.	Pin Name	I/O	Function	Polarity	
				H	L
7 | 9	–	–	NC		
10	GND	–	Ground		
11 | 13	–	–	NC		
14	RESET	I	Reset input	Normal	Reset
15	TXMUTE	I	Mutes: TXOM terminal (Pin64)	Mute	Normal
16	CDTL	I	Latch signal input for microcomputer interface		
17	CDATA	I	DATA input for microcomputer interface	"1"	"0"
18	–	–	NC		
19	–	–	NC		
20	CCK	I	Transmission clock input for microcomputer interface		
21	RXPLUL	I	PLL unlock detector input	Unlock	Lock
22	TXO	O	Digital audio output		
23	FS128	I	Digital audio interface transmission clock input		
24	RX3	I	Digital audio interface input, CH3		
25	–	–	NC		
26	VDD	–	Power supply		
27	SOUT	O	Serial output		
28	SOIN	I	Serial output return input		
29	FS2	I	FS double frequency clock		
30	SIN2	I	Serial input, CH3		
31	MPX	I	Multiplex input	RCH	LCH
32	MPXB	O	MPX inversion signal output	LCH	RCH
33	–	–	NC		
34	–	–	NC		
35	BCK	I	Serial transmission clock input		
36	–	–	NC		
37	SIN1	I	Serial input, CH1		

www.hifiengine.com

No.	Pin Name	I/O	Function	Polarity	
				H	L
38	CC	O	Control output for PCM1750		
39	BBCK	O	Clock output for PCM1750		
40	AKBCK	O	Serial input clock for AK5328/9		
41	–	–	NC		
42	GND	–	Ground		
43 | 57	–	–	NC		
58	VDD		Power supply		
59 | 63	–		NC		
64	TXOM	O	Digital audio interface, monitor output		

www.hifiengine.com

HD49229 (MAIN UNIT : IC504)

- **Data Strobe IC**
- Block Diagram

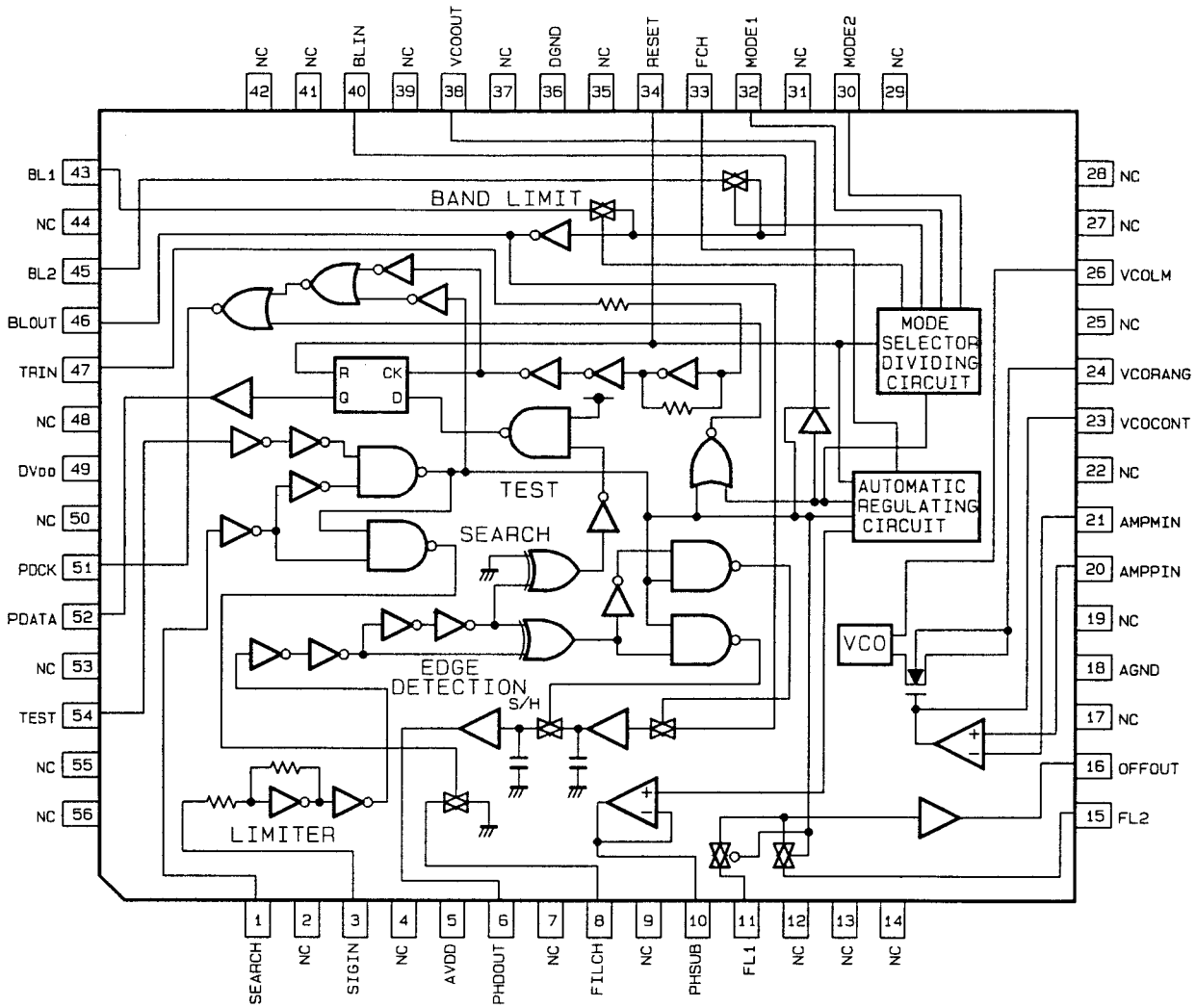

- Pin Function

No.	Symbol	Pin Name	I/O	Function	Polarity	
					H	L
1	SEARCH	Search Input	I	Search control input (TEST terminal parallel use)	Normal test	Search –
2	NC	–	–	No connection		
3	SIGIN	Signal Input	I	Playback signal input		
4	NC	–	–	No connection		
5	AVDD	Analog VDD	–	Analog power supply		
6	PHDOUT	Phase Detector Output	O	Phase comparison output		

No.	Symbol	Pin Name	I/O	Function	Polarity	
					H	L
7	NC	–	–	No connection		
8	FILCH	Filter Change	I	Loop filter changeover switch		
9	NC	–	–	No connection		
10	PHSUB	Subloop Phase Detector	O	Subloop phase comparison output		
11	FL1	Subloop Filter Input 1	I	Loop filter changeover switch for subloop		
12 | 14	NC	–	–	No connection		
15	FL2	Subloop Filter Input 2	I	Loop filter changeover switch for subloop		
16	OFFOUT	Offset Output	O	Subloop filter changeover output		
17	NC	–	–	No connection		
18	AGND	Analog GND	–	Analog GND		
19	NC	–	–	No connection		
20	AMPPIN	Amp Plus Input	I	Amp non-inverting input		
21	AMPMIN	Amp Minus Input	I	Amp inverting input		
22	NC	–	–	No connection		
23	VCOCONT	VCO Control	O	Amp output terminal VCO control terminal		
24	VCORANG	VCO Range	O	VCO range		
25	NC	–	–	No connection		
26	VCOLM	VCO Limitter	I	VCO oscillating frequency lower-limit limiter		
27 | 29	NC	–	–	No connection		
30	MODE2	PB Mode	I	Playback mode control input	Half speed	Standard
					–	double speed
31	NC	–	–	No connection		
32	MODE1	PB Mode	I	Playback mode control input	Double speed	Standard
					–	half speed
33	FCH	Channel Freq	I	Reference signal input		
34	RESET	RESET Input	I	Test-use control input (RESET input)	Normal	RESET
35	NC	–	–	No connection		

www.hifiengine.com

No.	Symbol	Pin Name	I/O	Function	Polarity	
					H	L
36	DGND	Digital GND	–	Digital GND		
37	NC	–	–	No connection		
38	VCOOUT	VCO Output	O	VCO output		
39	NC	–	–	No connection		
40	BLIN	Band Limit Input	I	Band limit circuit input		
41, 42	NC	–	–	No connection		
43	BL1	Band Limit Control 1	I	Band changeover switch for band control circuit		
44	NC	–	–	No connection		
45	BL2	Band Limit Control 2	I	Band changeover switch for band control circuit		
46	BLOUT	Band Limit Output	O	Band limit circuit output		
47	TRIN	Triangle wave Input	I	Triangle wave input for $\pi/2$ phase-shifting CK		
48	NC	–	–	No connection		
49	DVDD	Digital VDD	–	Digital power supply		
50	NC	–	–	No connection		
51	PDCK	PDCK	O	Playback clock output		
52	PDATA	PBDATA	O	Playback data output		
53	NC	–	–	No connection		
54	TEST	TEST Input	I	Test control input (SEARCH terminal parallel use)	Test –	Search normal
55, 56	NC	–	–	No connection		

www.hifiengine.com

■ SM5840LP (MAIN UNIT : IC511)

● Digital Filter for Double-Speed Playback

● Block Diagram

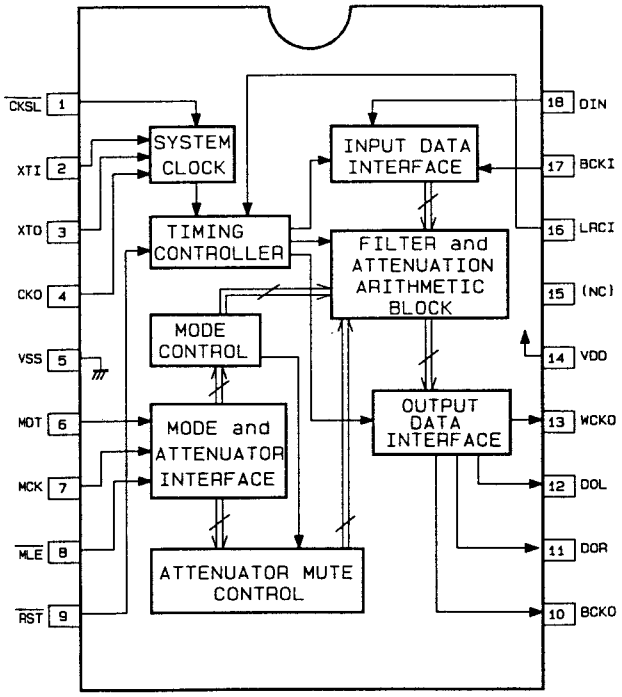

● Pin Function

No.	Pin Name	I/O	Function
1	$\overline{CKSL}$	I	Normal/double-speed mode selection (When $\overline{CKSL}$=H: normal mode) (When $\overline{CKSL}$=L: double-speed mode)
2	XTI	I	Oscillator input terminal: system clock (When $\overline{CKSL}$=H, 512fs=24.576MHz @ fs=48kHz) (When $\overline{CKSL}$=L, 256fs=24.576MHz @ fs=96kHz)
3	XTO	O	Oscillator output terminal
4	CKO	O	Oscillator output clock (Frequency same as XTI terminal)
5	Vss	–	GND terminal
6	MDT	I	Mode set data — Sets digital attenuator and mode flag register
7	MCK	I	Mode set clock — Sets digital attenuator and mode flag register
8	$\overline{MLE}$	I	Mode set latch enable — Sets digital attenuator and mode flag register
9	$\overline{RST}$	I	System set (Initialization)
10	BCKO	O	Output bit clock
11	DOR	O	Rch data output (When OMOD flag=L: 8fs data output) (When OMOD flag=H: 4fs data output)
12	DOL	O	Lch data output (When OMOD flag=L: 8fs data output) (When OMOD flag=L: 4fs data output)
13	WCKO	O	Output word clock
14	VDD	–	Power supply (5V)
15	(NC)	–	
16	LRCI	I	Input data sample rate (fs) clock (Example: 48kHz at normal speed; 96kHz at double speed)
17	BCKI	I	Input bit clock
18	DIN	I	Input data

www.hifiengine.com

■ HD49228FS (MAIN UNIT : IC601)

● One Chip Digital Servo-LSI for R-DAT

● Block Diagram

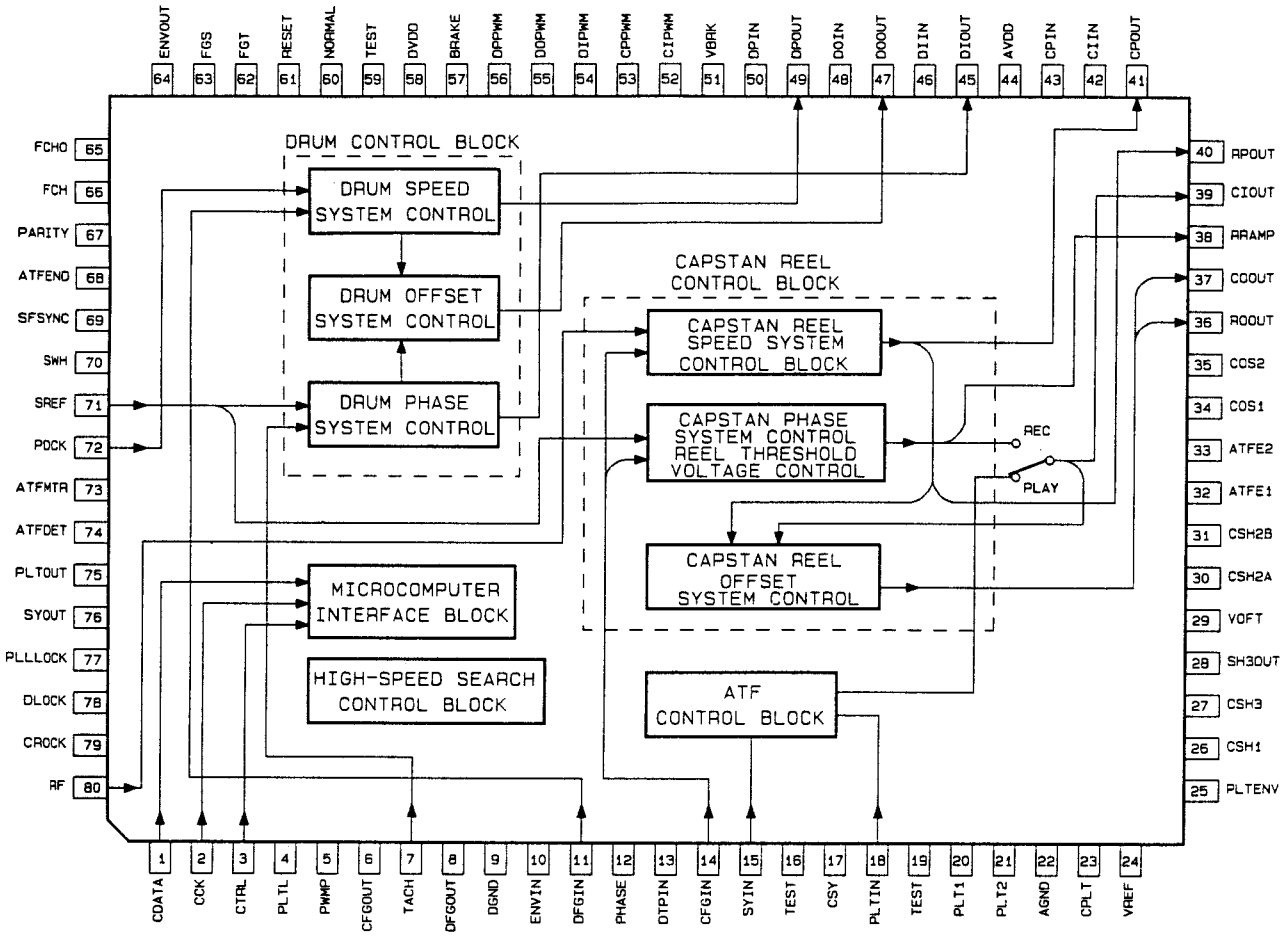

● Pin Function

No.	Symbol	Pin Name	I/O	Function	Polarity	
					H	L
1	CDATA	μ−COM Data Input	I	Microcomputer command input		
2	CCK	μ−COM Data Clock	I	Microcomputer command synchronous clock input		
3	CTRL	Control	I	Microcomputer command control signal		
4	PLTL	Pilot Level	O	PILOT-level condition output		
5	PWMP	PWM Polarity	I	PWM polarity selection	Positive phase	Negative phase
6	CFGOUT	Capstan FG Output	O	CFG binarized output		
7	TACH	TACH	O	TACH output		
8	DFGOUT	Drum FG Output	O	DFG binarized output		

No.	Symbol	Pin Name	I/O	Function	Polarity	
					H	L
9	DGND	Digital GND	–	Digital circuit ground		
10	ENVIN	Envelope Input	I	RF signal envelope input		
11	DFGIN	Drum FG Input	I	DFG amp input		
12	PHASE	Phase Adjust	I	C/R connection terminal for TACH generation monomulti		
13	DTPIN	Drum TACH Pulse Input	I	DTP amp input		
14	CFGIN	Capstan FG Input	I	CFG amp input		
15	SYIN	Sync Input	I	SYNC input during playback		
16	TEST	Test	I	Test input		
17	CSY	C Sync Comparator	I	SYNC comparator threshold voltage hold-capacitor connection terminal		
18	PLTIN	Pilot Input	I	PILOT amp 1 input		
19	TEST	Test	I	Test input		
20	PLT1	Pilot Amp 2 Output	O	PILOT amp 2 output		
21	PLT2	Pilot Amp 3 Output	I	PILOT amp 3 input		
22	AGND	Analog GND	–	Analog circuit GND		
23	CPLT	C Pilot Detector	I	Hold-capacitor connection terminal for PILOT detector circuit threshold voltage		
24	VREF	Reference Voltage	O	Outputs VDD/2		
25	PLTENV	Pilot Envelope	O	PILOT detector circuit output		
26	CSH1	C Sample Hold 1	I/O	Sample/hold 1 capacitor connection terminal		
27	CSH3	C Sample Hold 3	I/O	Sample/hold 3 capacitor connection terminal		
28	SH3OUT	Sample Hold 3 Output	O	Outputs intermediate voltage for sample/hold 3 and VREF		
29	VOFT	ATF Offset Voltage	I	Inputs error summing voltage		
30	CSH2A	C Sample Hold 2A	I/O	Sample/hold 2A capacitor connection terminal		
31	CSH2B	C Sample Hold 2B	I/O	Sample/hold 2B capacitor connection terminal		
32	ATFE1	ATF Error Amp 1 Input	I	ATF error 1 amp inversion terminal		
33	ATFE2	ATF Error Amp 1 Output	O	ATF error 1 amp output		
34	COS1	C Capstan Offset Servo 1	I/O	Capstan/reel offset system control integrator inversion input		
35	COS2	C Capstan Offset Servo 2	O	Capstan/reel offset system control integrator output		

www.hifiengine.com

No.	Symbol	Pin Name	I/O	Function	Polarity	
					H	L
36	ROOUT	Reel Offset Servo Output	O	Reel offset system control voltage buffer output		
37	COOUT	Capstan Offset Servo Output	O	Capstan offset system control voltage buffer output		
38	RRAMP	Reel Ramp Voltage	O	Reel threshold voltage output		
39	CIOUT	Capstan I Control Output	O	Capstan phase system control voltage buffer output		
40	RPOUT	Reel P Control Output	O	Reel speed system control voltage buffer output		
41	CPOUT	Capstan P Control Output	O	Capstan speed system control voltage buffer output		
42	CIIN	Capstan I Control Input	I	Capcitor connection terminal for LPF use in capstan phase system PWM		
43	CPIN	Capstan P Control Input	I	Capcitor connection terminal for LPF use in capstan speed system PWM		
44	AVDD	Analog VDD	–	Analog circuit power supply		
45	DIOUT	Drum I Control Output	O	Buffer output of drum phase system control voltage		
46	DIIN	Drum I Control Input	I	Capcitor connection terminal for LPF use in drum phase system PWM		
47	DOOUT	Drum Offset Servo Output	O	Buffer output of drum offset system control voltage		
48	DOIN	Drum Offset Servo Input	I	Capcitor connection terminal for LPF use in drum offset system PWM		
49	DPOUT	Drum P Control Output	O	Buffer output of drum speed system control voltage		
50	DPIN	Drum P Control Input	I	Capcitor connection for LPF use in drum speed system PWM		
51	VBRK	Drum BRAKE Voltage	I	Drum brake voltage input		
52	CIPWM	Capstan I Control PWM Output	O	Capstan phase system PWM output		
53	CPPWM	Capstan P Control PWM Output	O	Capstan speed system PWM output		
54	DIPWM	Drum I Control PWM Output	O	Drum phase system PWM output		
55	DOPWM	Drum Offset Servo PWM Output	O	Drum offset system PWM output		
56	DPPWM	Drum P Control PWM Output	O	Drum speed system PWM output		
57	BREKE	Brake Control	O	Drum brake control output	Brake	Norm
58	DVDD	Digital VDD	–	Digital circuit power supply		

www.hifiengine.com

No.	Symbol	Pin Name	I/O	Function	Polarity	
					H	L
59	TEST	Test	I	Test input	Norm	Test
60	NORMAL	Normal	I	Normal input	Norm	Test
61	RESET	Reset	I	Reset input	Norm	RST
62	FGT	Takeup FG	I	Reel FG input (takeup side)		
63	FGS	Supply FG	I	Reel FG input (supply side)		
64	ENVOUT	Envelope Output	O	RF signal envelope binarized output		
65	FCHO	ATF Channel Frequency	O	Small-diameter drum ATF channel clock output		
66	FCH	Channel Frequency	I	Channel clock input		
67	PARITY	Parity	I	Parity signal input		
68	ATFEND	ATF End	O	ATF END output		
69	SFSYNC	Servo Frame Sync	I	Servo frame synchronous signal during LP2 (double-scan) mode		
70	SWH	Switch Head	O	Head changeover signal output		
71	SREF	Servo Reference	I	Servo reference input		
72	PDCK	Playback Data Clock	I	Playback signal synchronous clock input		
73	ATFMTR	ATF Monitor	O	HOLD monitor during high-speed search, ATF monitor during PLAY		
74	ATFDET	ATF DETECTION	O	HOLD monitor during high-speed search, ATFDET monitor during PLAY		
75	PLTOUT	Pilot Output	O	DION monitor during high-speed search, PILOT monitor during PLAY		
76	SYOUT	SYNC Output	O	PDCK2 divider CK monitor during high-speed search, SYNC monitor during PLAY		
77	PLLLOCK	PLL Lock	O	PLL LOCK monitor during high-speed search, DPLOCK output during PLAY		
78	DLOCK	Drum Lock	O	Drum lock output		
79	CRLOCK	Capstan Reel Lock	O	Capstan reel lock output		
80	RF	RF	O	RF signal exist/nonexist output		

www.hifiengine.com

■ PDG093A (MAIN UNIT : IC503)

● Microcomputer

● Function of Terminals

No.	Pin Name	I/O	Function
1	CFG	I	Capstan FG input terminal. Used as interruption terminal (INT1)
2	HSWP	I	Head-switching pulse input terminal. Used as interruption terminal (INT2).
3	FGT	I	Takeup-side reel FG input terminal. Used as interruption terminal (INT3).
4	REMOSIG	I	Remote control signal input terminal. Used as RMC terminal; automatically sets remote control signal pulse frequency (from pulse rise to pulse fall) using remote control receiving circuit.
5	FSYNC	I	Frame synchronous signal input 50%-duty pulse signal connected to FSYNC terminal (pin 94) on signal receiving LSI (HD49226FS); has frequencies of 30 (ms) in SP mode, 60 (ms) in LP mode, and 15 (ms) in WSP mode.
6	VOFT	O	ATF error summing voltage output terminal. Used as PWM output terminal; connects externally installed low-pass filter output to VOFT terminal (pin 29) on servo LSI (HD49228FS); added to ATF error voltage during 1.5Tp test mode; voltage variable range: 0.5 (V) to 4.5 (V).
7	SEL	O	Input extension-IC-input select output terminal. Connected to SEL (pin 1) on input extension IC (74HC157); selects either of 2 groups of 4-bit input; 1A to 4A input terminals are selected with "L".
8	FGS	I	Supply-side reel FG input terminal. Used as interruption terminal (CINT).
9	CTRL	O	Microcomputer data transmission mode input control signal/microcomputer command control signal output terminal. Connected to CTRL terminal (pin 2) on signal-processing LSI (HD49226FS) and CTRL terminal (pin 3) on servo LSI (HD49228FSA).
10	CCK	O	Serial data transmission clock output terminal. Used as SCK0 terminal; connected to shift clock input terminals of devices (signal-processing LSI, servo LSI, fader LSI, and D/A-side digital filter) controlled by serial transmission from microcomputer; serial clock frequency is 1.95 (μs) and interval clock frequency is 30.5 (μs).
11	CDATAO	I	Serial data input terminal. (Conforms to terminal names on the signal-processing LSI side; data input/output direction is opposite to terminal names); used as S10 terminal and is connected to CDATAO terminal (pin 5) on signal-processing LSI (HD49226FS).
12	CDATAI	O	Serial data output terminal. Used as SCK0 terminal; (conforms to terminal names on the signal-processing LSI side; data input/output direction is opposite to terminal names); connected to serial data input terminals of devices (signal-processing LSI, servo LSI, fader LSI, and D/A-side digital filter) controlled by serial transmission from microcomputer.
13	XMLE	O	Mode set latch enable output terminal. Connected to $\overline{\text{MLE}}$ terminal (pin 8) on D/A-side digital filter (SM5840LP) used for WSP mode; transmission data from microcomputer are latched at leading edge (⌐).
14	CDTL	O	Latch signal output terminal for microcomputer interface use. Connected to CDTL terminal (pin 16) on fader LSI (HG62E43B85-FS); transmission data from microcomputer are latched at leading edge (⌐).
15	RFMODE	O	RF amp operating mode switching output terminal. Connected to MODE1 terminal (pin 42) on RF amp IC (HA12154MA); switches to "H" in WSP mode; controls RF amp 2nd amp and equalizer.

www.hifiengine.com

No.	Pin Name	I/O	Function
16	KS0	I	Key scan data input terminal 0. Used as KR0 terminal; automatically inputs key scan data from terminals KS0, KS1, and KS2 into microcomputer's internal RAM using hardware key scan functions.
17	KS1	I	Key scan data input terminal 1 used as KR1 terminal.
18	KS2	I	Key scan data input terminal 2 used as KR2 terminal.
19	TEST	O	Data strobe LSI test mode control output terminal. Connected to TEST terminal (pin 54) on data strobe LSI (HD9229); switches to "H" during VCO free-run adjustment mode (in test mode); at this time XSER terminal must turn to "H".
20	LPMODE	O	LP mode select output terminal. Connected to LP terminal (pin 60) on signal-processing LSI (HD49226FS); selects signal-processing LSI operating mode in LP playback mode; switches to "H" in WLP mode (which performs half-speed LP playback); switches to "L" in LP/SP/WSP modes (LP mode performs W-scan LP playback; SP and WSP modes do not affect operating conditions of these terminals).
21	RP	O	RF amp record/playback mode switching output terminal. Connects output and AND output of RECPB terminal (pin 24) on signal-processing LSI (HD49226FS) to RECPB terminal (pin 39) on FR amp IC (HA12154MA); switches RF amp IC record and playback modes; serves to protect output from the microcomputer.
22	WSMODE	O	Audio block double-speed switching output. Switches A/D and D/A blocks according to operating mode; switches to "H" in WSP and WLP modes.
23	XSRVRST	O	Servo LSI reset output. Connected to RESET terminal (pin 61) on servo LSI (HD49228FS); resets LSI during power ON/OFF operation and when shifting from search mode to other modes.
24	Y1	I	Input terminal 1 of input extension IC output. SEL=H: PLLLOCK (DPLOCK monitor during PLAY; PLL LOCK monitor during high-speed search) SEL=L: BRAKE (drum brake control monitor)
25	Y2	I	Input terminal 2 of input extension IC output. SEL=H: DLOCK (drum lock monitor) SEL=L: ATFM (ATF monitor during PLAY; HUNT monitor during high-speed search)
26	Y3	I	Input terminal 3 of input extension IC output. SEL=H: CRLOCK (capstan/reel lock monitor) SEL=L: ATFD (ATFDET monitor during PLAY; HOLD monitor during high-speed search)
27	Y4	I	Input terminal 4 of input extension IC output. SEL=H: RF (RF signal exist/nonexist monitor) SEL=L: PLTL (PILOT level condition monitor)
28	LV DATA	I	Level meter input terminal. Connected to LVDATA terminal (pin 97) on signal-processing LSI (HD49226FS)
29	LVCK	O	Level meter data clock output terminal. Connected to LVCK terminal (pin 96) on signal-processing LSI (HD49226FS); generates 8 pulses in shift clock L (ch)-R (ch) sequence for each half frame (for every frame in the case of WSP mode) of level data retrieval.
30	DARST	O	Audio block reset output terminal. Switches to "H" during Fs and REC/PB changeover with power ON; resets audio block (digital filter and D/A converter).

www.hifiengine.com

No.	Pin Name	I/O	Function
31	QDCK	O	CD Q-data shift clock output terminal. Connected to QDCK terminal (pin 67) on signal-processing LSI (HD49226FS); generates 8 pulses in shift clock TNO-INDEX sequence for each frame of CD Q-data retrieval.
32	Q DATA	I	CD Q-data input terminal. Connected to DATA terminal (pin 68) on signal-processing LSI (HD49226FS).
33	TIMER SW	I	Timer SW position input terminal. Used as AN1 (analog input); switches to timer playback On at 0 to 1.25 (V), timer OFF at 1.25 to 3.75 (V), and timer record ON at 3.75 to 5 (V). [All voltages are standard values during VDD5 (V).]
34	INPUT SW	I	Record input changeover SW position input terminal. Used as AN2 (analog input); switches to OPT (optical) input at 0 to 1.25 (V), COAX (coaxial) input at 1.25 to 3.75 (V), and analog input at 3.75 to 5 (V). [All voltages are standard values during VDD5 (V).]
35	RECMODE SW	I	Record mode changeover SW position input terminal. Used as AN3 (analog input); switches to SP mode at 0 to 1 (V), WLP mode at 1 to 2 (V), WSP mode at 2 to 4 (V), and LP mode at 4 to 5 (V). [All voltages are standard values during VDD5 (V).] In the actual product, however, there is no SW position in WLP mode, so this position cannot be selected.
36	THIN SW	I	SW input terminal for thin (9μm) tape detector use. Connected to tape thickness recognition hole detector SW on D-4 mechanism; switches to "H" when tape is thin (HOLE OPEN).
37	P OFF	I	Power OFF signal input terminal. Falls from "H" to "L" (⌉L) when power is OFF; monitors fall time with timer interruption processing for each 1. 95(ms); initiates power-OFF processing routine.
38	XRST	I/O	System reset terminal. Connected to output terminal (pin 5) on "L"-level active reset IC (M51957AL).
39	EXTAL	I	Ceramic resonator connection terminal (input) for system clock oscillator. Connects terminal and pin 40 with 8.38 (MHz) ceramic lock.
40	XTAL	O	Ceramic resonator connection terminal (output) for system clock oscillator.
41	Vss	–	GND terminal. Connects to GND.
42	NC	O	No connection terminal. Treated as open circuit. ("H"-level terminal).
43	NC	I	No connection terminal. Treated as open circuit. ("L"-level terminal).
44	T END	I	Input terminal of tape end sensor output. Used as AN6 (analog input).
45	T TOP	I	Input terminal of tape top sensor output. Used as AN7 (analog input).
46	AVREF	–	A/D converter standard voltage input terminal. Connected to 5 (V) line.
47	AVss	–	A/D converter GND terminal. Connected to GND.
48	XSER	O	Data strobe LSI search mode control output terminal. Connected to SEARCH terminal (pin 1) in data strobe LSI (HD49229); changes to "L" in search run mode in FF, REW, etc. ; at this time the TEST terminal must be "L".
49	SOL ON	O	Brake solenoid control output terminal. Performs ON/OFF control of brake solenoid in D-4 mechanism; during "H," brake is ON.
50	MDM ON	O	Mode motor control output terminal. Performs ON/OFF control of mode motor in D-4 mechanism; during "H," mode motor is ON.

www.hifiengine.com

No.	Pin Name	I/O	Function
51	T LED	O	Tape top/end sensor LED control output terminal. Performs ON/OFF control of tape top/end sensor LED in D-4 mechanism; flashes at 3.9 (ms) frequency.
52	MLM CW	O	Rotating direction control output terminal for mode motor and cassette console loading motor. Controls rotating direction of mode motor and cassette console loading motor in D-4 mechanism; during "H", rotates in clockwise direction.
53	LDM ON	O	Cassette console loading motor control output terminal. Controls ON/OFF operation of loading motor; during "H", loading motor is ON.
54	EMP	O	De-emphasis filter control output terminal. Controls ON/OFF operation of de-emphasis filter in D/A block; during "H", de-emphasis is ON; changes to "H" when ID1 in PCM-ID is "01".
55	X256	O	256/384Fs clock select control output terminal. Changes to "H" when Fs=32(kHz) during record/playback (when ID2 in PCM-ID is "10"). (Also changes to "H" when Fs=64(kHz) in WSP/WLP modes.)
56	44PB	O	Master clock select control output terminal. Selects and oscillates master clock when Fs=44.1 (kHz) during record/playback; during "H", clock is oscillated. (Also changes to "H" when Fs=88.2 (kHz) in WSP mode.)
57	XLMUTE	O	Line mute control output terminal. Controls ON/OFF operation of line mute (analog mute); during "L", mute is ON.
58	LPRUN	O	LP run mode monitor output. Changes to "H" in LP run mode (tape speed=4.075mm). (Changes to "L" in SP/WSP/WLP run modes.)
59	PBMUTE	O	Playback mute control output terminal. Connected to MUTE terminal (pin 1) in signal-processing LSI (HD49226FS); controls ON/OFF operation of playback output signal mute (digital mute); during "H", mute is ON.
60	4832PB	O	Master clock select control output terminal. Selects and oscillates master clock when Fs=48/32 (kHz) during record/playback; during "H", clock is oscillated. (Also changes to "H" when Fs=96/64 (kHz) in WSP/WLP modes.)
61	S0	O	Segment signal output terminal 0 for FL tube.
62	S1	O	Segment signal output terminal 1 for FL tube.
63	S2	O	Segment signal output terminal 2 for FL tube.
64	S3	O	Segment signal output terminal 3 for FL tube.
65	S4	O	Segment signal output terminal 4 for FL tube.
66	S5	O	Segment signal output terminal 5 for FL tube.
67	S6	O	Segment signal output terminal 6 for FL tube.
68	S7	O	Segment signal output terminal 7 for FL tube.
69	S8	O	Segment signal output terminal 8 for FL tube.
70	S9	O	Segment signal output terminal 9 for FL tube.
71	S10	O	Segment signal output terminal 10 for FL tube.

www.hifiengine.com

No.	Pin Name	I/O	Function
72	S11	O	Segment signal output terminal 11 for FL tube.
73	S12	O	Segment signal output terminal 12 for FL tube.
74	S13	O	Segment signal output terminal 13 for FL tube.
75	S14	O	Segment signal output terminal 14 for FL tube.
76	T11	O	Segment signal timing terminal 11 for FL tube.
77	T10	O	Segment signal timing terminal 10 for FL tube.
78	T9	O	Segment signal timing terminal 9 for FL tube.
79	T8	O	Segment signal timing terminal 8 for FL tube.
80	T7	O	Segment signal timing terminal 7 for FL tube.
81	T6	O	Segment signal timing terminal 6 for FL tube.
82	T5	O	Segment signal timing terminal 5 for FL tube.
83	T4	O	Segment signal timing terminal 4 for FL tube.
84	T3	O	Segment signal timing terminal 3 for FL tube.
85	T2	O	Segment signal timing terminal 2 for FL tube.
86	T1	O	Segment signal timing terminal 1 for FL tube.
87	T0	O	Segment signal timing terminal 0 for FL tube.
88	VFDP	–	Negative voltage supply terminal for FL tube.
89	VDD	–	Positive power supply terminal. Connected to 5 (V) line.
90	NC	–	NC terminal. Connected to 5 (V) line.
91	VSS	–	GND terminal. Connected to GND terminal.
92	D IN	O	Digital input record mode monitor output. Changes to "H" in digital input record mode; used for mute process during RX-PLL analog.
93	CM CW	O	Capstan motor rotating direction control output terminal. Controls rotating direction of capstan motor in D-4 mechanism; during "H", rotates in clockwise (FWD) direction.
94	XDM ON	O	Drum motor control output terminal. Controls ON/OFF operation of drum motor in D-4 mechanism; during "L", motor is ON.
95	XCM ON	O	Capstan motor control output terminal. Controls ON/OFF operation of capstan motor in D-4 mechanism; during "L", motor is ON.
96	Y1	I	Input terminal 1 of input extension IC output. SEL=H: XHALFIN (SW input for cassette half detector use; during "L", cassette half is detected.) SEL=L: ENC0 (mechanism encoder output BIT0)
97	Y2	I	Input terminal 2 of input extension IC output. SEL=H: RECINH (SW input for record inhibit recognition hole detector use; during "H", recording is inhibited.) SEL=L: ENC1 (mechanism encoder output BIT1)

www.hifiengine.com

No.	Pin Name	I/O	Function
98	Y3	I	Input terminal 3 of input extension IC output. SEL=H: LDSTART (SW input for cassette console loading start detector use; during "H", loading is started.) SEL=L: ENC2 (mechanism encoder output BIT2)
99	Y4	I	Input terminal 1 of input extension IC output. SEL=H: XLDEND (SW input for cassette console loading end detector use; during "L", loading is completed.) SEL=L: ENC3 (mechanism encoder output BIT3)
100	DFG	I	Drum FG input terminal. Used as interruption terminal (INT0).

www.hifiengine.com

8. BLOCK DIAGRAM

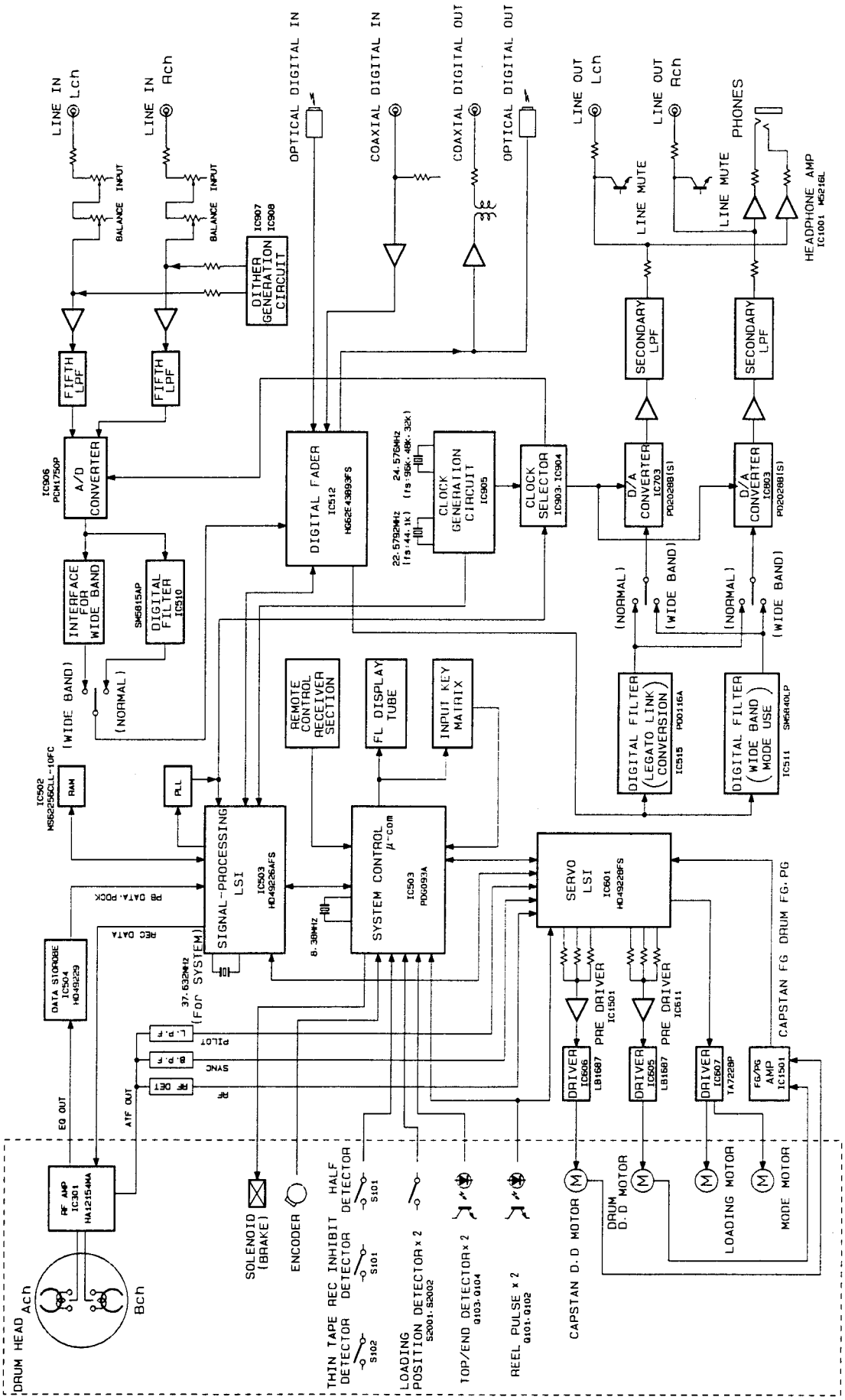

9. PANEL FACILITIES

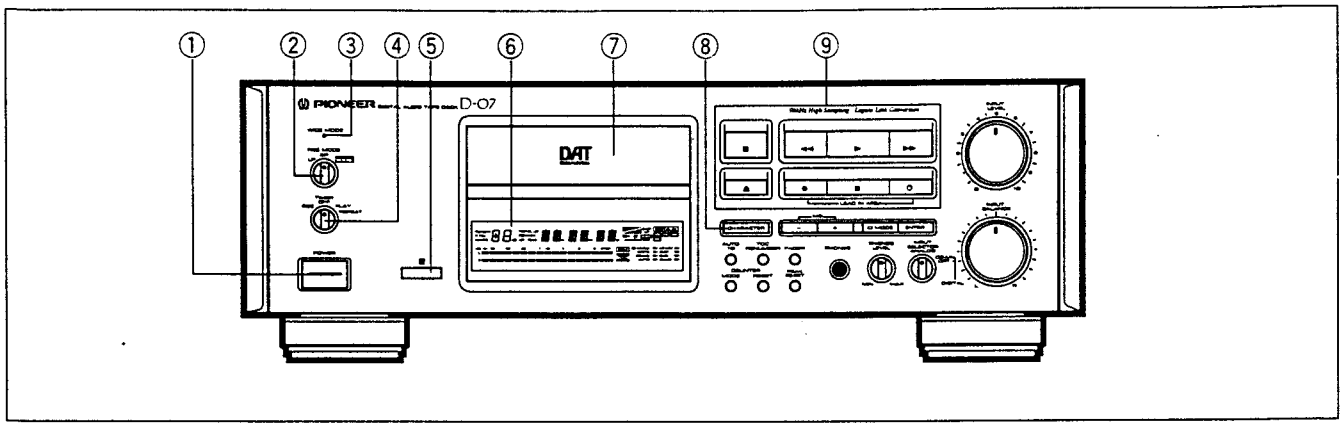

Front panel

① **POWER switch**
Operation of the unit becomes possible approximately 4 seconds after the power is turned on.

② **REC MODE switch**
LP: Long Play mode. Set to this position for long-hour recording of analog signal and digital signal with a sampling frequency of 32 kHz.
SP: Standard Play mode. Usually set this switch to this position.
WIDE: Wide range mode. With this position, only analog signals can be recorded. A wide range recording beyond 40 kHz is possible, but the recording time is halved from the SP mode.

③ **WIDE MODE indicator**
Lights when the WIDE mode is selected.

④ **TIMER switch (REC/OFF/PLAY/REPEAT)**
Be sure to set this switch to OFF when not using the timer function.

⑤ **Remote sensor window**

⑥ **Display window**

⑦ **Cassette tray**

⑧ **CHARACTER button**
Press to record or display character data.

⑨ **▲: Open/close button**

■: Stop button
Press to stop tape transport or to clear the program memory.

◄◄: Rewind button
Pressing this button during playback starts review operation.

►►: Fast Forward button
Pressing this button during playback starts cue operation.

►: Play button

●: Rec button

II: Pause button
Tape transport cannot be paused during fast forward or rewind operation.

O: Mute button

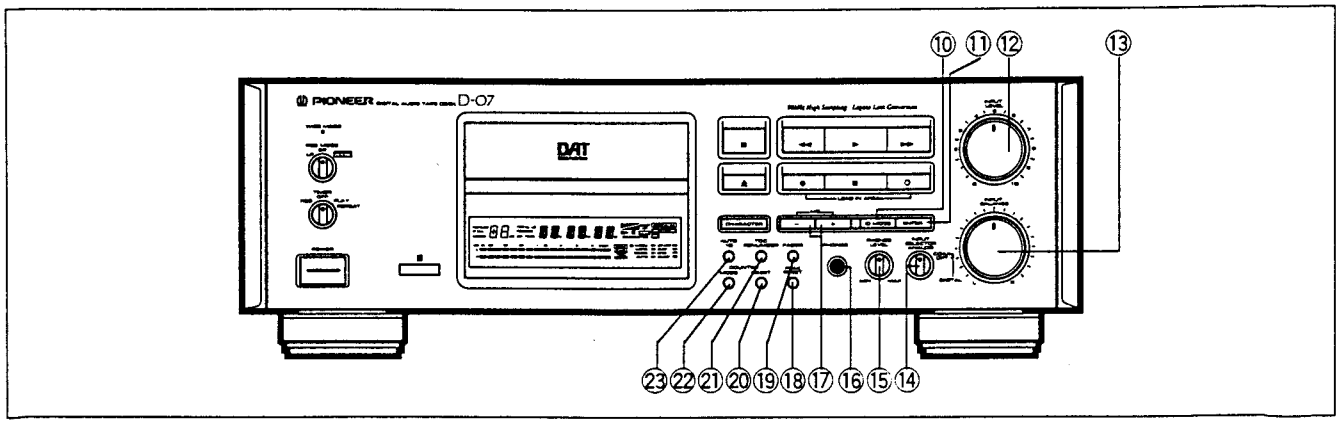

www.hifiengine.com

⑩ **ID MODE button**
Press to select an ID mode.

⑪ **ENTER button**
Press to record or erase subcodes.

⑫ **INPUT LEVEL control**
Turn the knob to set the recording level when analog signals are input.

⑬ **INPUT BALANCE control**

⑭ **INPUT SELECTOR switch**
Set to select the recording input source.

⑮ **PHONES LEVEL knob**

⑯ **PHONES jack**

⑰ **MS +/– buttons**
Press in Music Search or skip search operation.

⑱ **PEAK RESET button**

⑲ **FADER button**
Press to fade in or fade out the recording or playback.

⑳ **COUNTER RESET button**

㉑ **TOC RENUMBER button**

㉒ **COUNTER MODE button**

㉓ **AUTO ID button**
During recording:
Press for automatic recording of start-IDs. (This function is turned off automatically in case of timer recording.)
During playback:
Press to skip unwanted tunes. (Skipping occurs from a skip-ID until the next start-ID.)

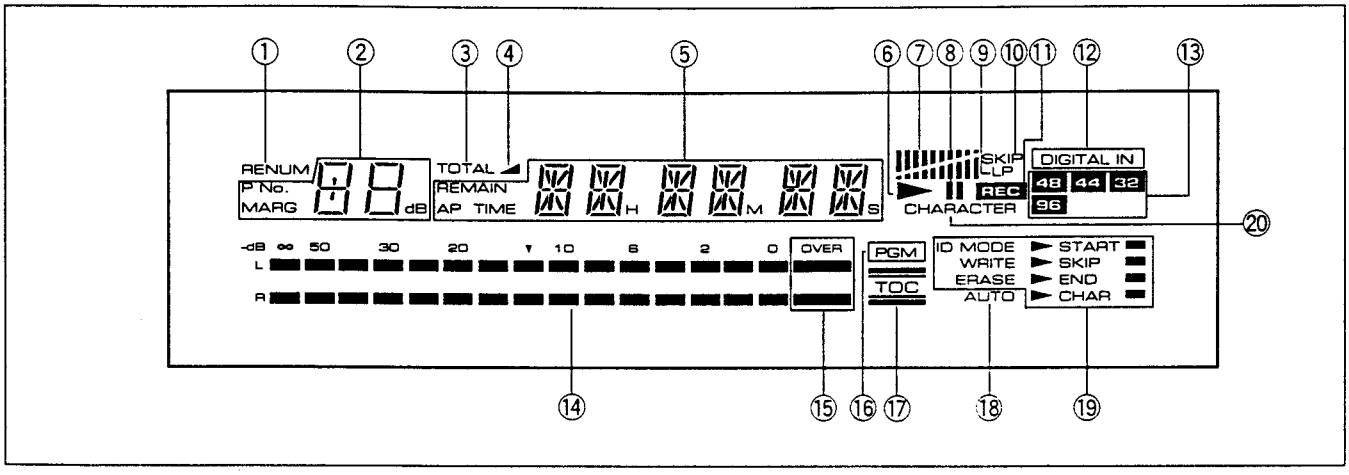

Display

① **RENUM (renumber) indicator**

② **Tune number/peak margin display**

③ **TOTAL indicator**

④ **Left More character indicator (◢)**
In the character entry mode, indicates the presence of one or more characters hidden to the left of the display.

⑤ **Counter indicators**
In the long play (LP) mode and the wide range (WIDE) mode, absolute time (A-TIME), remaining play time (REMAIN) and total play time (TOTAL) are displayed, based on those in the standard mode. To obtain the actual time, double each value in the long play mode, and half each value in the wide range mode.

⑥ **Play (►) indicator**

⑦ **Fader indicators**
IIIIIIIIII... Indicates that fade-out is taking place.
.....IIIIIII... Indicates that fade-in is taking place.

⑧ **Pause (II) indicator**

⑨ **LP indicator**

⑩ **SKIP indicator**

⑪ **REC indicator**

⑫ **DIGITAL IN indicator**

⑬ **Sampling frequency indicator**

⑭ **Digital-drive level meter**

⑮ **OVER level indicator**

⑯ **PGM indicator**

⑰ **TOC indicator**

⑱ **AUTO ID indicator**

⑲ **ID MODE indicators**

⑳ **CHARACTER indicator**

www.hifiengine.com

10. SPECIFICATIONS

Type ..... Rotating head digital audio tape recorder
Tape speed ..... WIDE: 16.3 mm/sec
SP: 8.15 mm/sec
LP:4.075 mm/sec
Recording time ..... WIDE: 60 minutes max.
SP: 120 minutes max.
LP: 240 minutes max.
Number of channels ..... 2 channels, stereo
Number of quantization bits ..... 16 bits, linear
12 bits, nonlinear
Sampling frequencies ..... 48kHz (recording, playback)
(Provided SCMS) 44.1kHz (digital recording only, playback)
96 kHz (WIDE: analog input recording only, playback)
32kHz (SP: digital recording only, playback)
32kHz (LP: recording, playback)
Error correction method ..... Double encoded,
Reed-Solomon code
Modulation system ..... 8-10 conversion
Emphasis ..... Recording: Fixed at OFF
Playback: Switched automatically
Head ..... AT-construction Sendust head
Recording/playback frequency response ..... WIDE: 2 Hz - 44 kHz
SP: 2 Hz - 22 kHz
LP: 2 Hz - 14.5 kHz
Signal-to-Noise ratio ..... 92 dB or greater
Dynamic range ..... 92 dB or greater
Total harmonic distortion ..... 0.0043% or less (1 kHz)
Wow and flutter ..... Below measurable limit
(± 0.001% W.PEAK)

■ Analog Input/Output Terminals

Line input jacks ..... RCA PIN; reference input level 500mV
(input impedance 27 kΩ)
Line output jacks ..... RCA PIN; reference output level 500mV
(output impedance 1 kΩ)
Headphone output jack ..... Stereo standard jack,
6 mm diameter
(1.0mW volume max., load impedance 8 Ω)

■ Digital Input/Output Terminals

Coaxial input terminal ..... RCA PIN; 0.5 Vp-p
(input impedance 75 Ω)
Coaxial output terminal ..... RCA PIN; 0.5 Vp-p
(output impedance 75 Ω)
Optical input terminal ..... x 1
Optical output terminal ..... x 1

■ Provided Functions

- Wide Range (WIDE) mode
- Long Play (LP) mode
- Character Pack function
- High-speed AI search
- Program selection
- Skip tune selection and Music Search
- Direct tune selection
- Music repeat
- Skip play
- Random play
- One-point memory
- Time skipping
- Renumbering with TOC recording
- Fade-in/fade-out
- End mark recording, end search, blank search
- Auto ID recording
- 7-mode counter
- Automatic tape thickness computing type remaining tape display
- Digital peak margin display
- Timer recording/playback
- Cue/review (with fine cue/review)
- REC muting (auto spacing)
- Display OFF
- Intro Scan

■ Power Supply and Other Specifications

Power source ..... AC 220 - 230 V, 50/60Hz
Power consumption ..... 36 W
Dimensions ..... 440 (W) x 141 (H) x 375 (D) mm
Weight ..... 7.6 kg

■ Accessories

Wireless remote control unit 1
Remote control unit batteries (IEC R03) 2
Connection cords (RCA pin-plug, stereo) 2
Operating instructions 1
Warranty card 1

NOTE:
The specifications and design of this product are subject to change without notice, due to improvement.

www.hifiengine.com