Pioneer

Service Manual

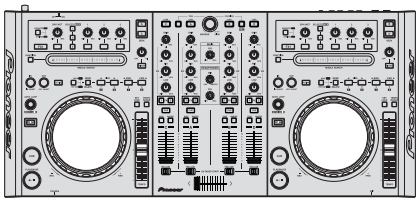

DDJ-T1

ORDER NO.
RRV4164

DJ CONTROLLER

DDJ-T1

THIS MANUAL IS APPLICABLE TO THE FOLLOWING MODEL(S) AND TYPE(S).

Model	Type	Power Requirement	Remarks
DDJ-T1	SVYXJ8	AC 100 V to 240 V	
DDJ-T1	UXJCB	AC 100 V to 240 V	
DDJ-T1	FLPXJ	AC 100 V to 240 V	
DDJ-T1	KXJ5	AC 100 V to 240 V	
DDJ-T1	AXJ5	AC 100 V to 240 V	

For details, refer to "Important Check Points for good servicing".

PIONEER CORPORATION 1-1, Shin-ogura, Saiwai-ku, Kawasaki-shi, Kanagawa 212-0031, Japan
PIONEER ELECTRONICS (USA) INC. P.O. Box 1760, Long Beach, CA 90801-1760, U.S.A.
PIONEER EUROPE NV Haven 1087, Keetberglaan 1, 9120 Melsele, Belgium
PIONEER ELECTRONICS ASIACENTRE PTE. LTD. 253 Alexandra Road, #04-01, Singapore 159936

K-IZV FEB. 2011 Printed in Japan

SAFETY INFORMATION

This service manual is intended for qualified service technicians; it is not meant for the casual do-it-yourselfer. Qualified technicians have the necessary test equipment and tools, and have been trained to properly and safely repair complex products such as those covered by this manual.

Improperly performed repairs can adversely affect the safety and reliability of the product and may void the warranty. If you are not qualified to perform the repair of this product properly and safely, you should not risk trying to do so and refer the repair to a qualified service technician.

WARNING

This product may contain a chemical known to the State of California to cause cancer, or birth defects or other reproductive harm.

Health & Safety Code Section 25249.6 - Proposition 65

(FOR USA MODEL ONLY)

1. SAFETY PRECAUTIONS

The following check should be performed for the continued protection of the customer and service technician.

LEAKAGE CURRENT CHECK

Measure leakage current to a known earth ground (water pipe, conduit, etc.) by connecting a leakage current tester such as Simpson Model 229-2 or equivalent between the earth ground and all exposed metal parts of the appliance (input/output terminals, screwheads, metal overlays, control shaft, etc.). Plug the AC line cord of the appliance directly into a 120 V AC 60 Hz outlet and turn the AC power switch on. Any current measured must not exceed 0.5 mA.

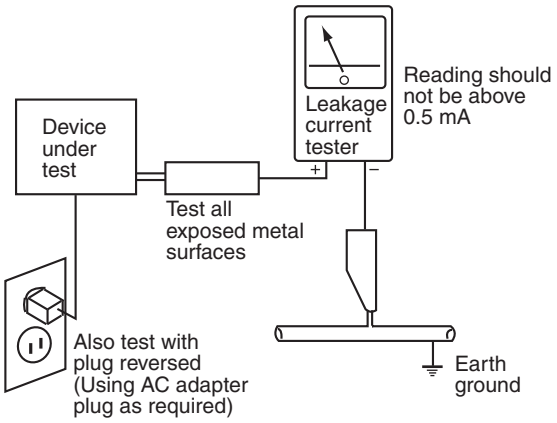

AC Leakage Test

ANY MEASUREMENTS NOT WITHIN THE LIMITS OUTLINED ABOVE ARE INDICATIVE OF A POTENTIAL SHOCK HAZARD AND MUST BE CORRECTED BEFORE RETURNING THE APPLIANCE TO THE CUSTOMER.

2. PRODUCT SAFETY NOTICE

Many electrical and mechanical parts in the appliance have special safety related characteristics. These are often not evident from visual inspection nor the protection afforded by them necessarily can be obtained by using replacement components rated for voltage, wattage, etc. Replacement parts which have these special safety characteristics are identified in this Service Manual.

Electrical components having such features are identified by marking with a ⚠ on the schematics and on the parts list in this Service Manual.

The use of a substitute replacement component which does not have the same safety characteristics as the PIONEER recommended replacement one, shown in the parts list in this Service Manual, may create shock, fire, or other hazards.

Product Safety is continuously under review and new instructions are issued from time to time. For the latest information, always consult the current PIONEER Service Manual. A subscription to, or additional copies of, PIONEER Service Manual may be obtained at a nominal charge from PIONEER.

[Important Check Points for Good Servicing]

In this manual, procedures that must be performed during repairs are marked with the below symbol.
Please be sure to confirm and follow these procedures.

1. Product safety

Please conform to product regulations (such as safety and radiation regulations), and maintain a safe servicing environment by following the safety instructions described in this manual.

① Use specified parts for repair.

Use genuine parts. Be sure to use important parts for safety.

② Do not perform modifications without proper instructions.

Please follow the specified safety methods when modification(addition/change of parts) is required due to interferences such as radio/TV interference and foreign noise.

③ Make sure the soldering of repaired locations is properly performed.

When you solder while repairing, please be sure that there are no cold solder and other debris.
Soldering should be finished with the proper quantity. (Refer to the example)

④ Make sure the screws are tightly fastened.

Please be sure that all screws are fastened, and that there are no loose screws.

⑤ Make sure each connectors are correctly inserted.

Please be sure that all connectors are inserted, and that there are no imperfect insertion.

⑥ Make sure the wiring cables are set to their original state.

Please replace the wiring and cables to the original state after repairs.
In addition, be sure that there are no pinched wires, etc.

⑦ Make sure screws and soldering scraps do not remain inside the product.

Please check that neither solder debris nor screws remain inside the product.

⑧ There should be no semi-broken wires, scratches, melting, etc. on the coating of the power cord.

Damaged power cords may lead to fire accidents, so please be sure that there are no damages.
If you find a damaged power cord, please exchange it with a suitable one.

⑨ There should be no spark traces or similar marks on the power plug.

When spark traces or similar marks are found on the power supply plug, please check the connection and advise on secure connections and suitable usage. Please exchange the power cord if necessary.

⑩ Safe environment should be secured during servicing.

When you perform repairs, please pay attention to static electricity, furniture, household articles, etc. in order to prevent injuries.
Please pay attention to your surroundings and repair safely.

2. Adjustments

To keep the original performance of the products, optimum adjustments and confirmation of characteristics within specification.
Adjustments should be performed in accordance with the procedures/instructions described in this manual.

3. Lubricants, Glues, and Replacement parts

Use grease and adhesives that are equal to the specified substance.
Make sure the proper amount is applied.

4. Cleaning

For parts that require cleaning, such as optical pickups, tape deck heads, lenses and mirrors used in projection monitors, proper cleaning should be performed to restore their performances.

5. Shipping mode and Shipping screws

To protect products from damages or failures during transit, the shipping mode should be set or the shipping screws should be installed before shipment. Please be sure to follow this method especially if it is specified in this manual.

CONTENTS

1. SERVICE PRECAUTIONS

1.1 NOTES ON SOLDERING

- For environmental protection, lead-free solder is used on the printed circuit boards mounted in this unit.
  Be sure to use lead-free solder and a soldering iron that can meet specifications for use with lead-free solders for repairs accompanied by reworking of soldering.

- Compared with conventional eutectic solders, lead-free solders have higher melting points, by approximately 40 ºC.
  Therefore, for lead-free soldering, the tip temperature of a soldering iron must be set to around 373 ºC in general, although the temperature depends on the heat capacity of the PC board on which reworking is required and the weight of the tip of the soldering iron.

Do NOT use a soldering iron whose tip temperature cannot be controlled.

Compared with eutectic solders, lead-free solders have higher bond strengths but slower wetting times and higher melting temperatures (hard to melt/easy to harden).

The following lead-free solders are available as service parts:
- Parts numbers of lead-free solder:
  GYP1006 1.0 in dia.
  GYP1007 0.6 in dia.
  GYP1008 0.3 in dia.

1.2 SERVICE NOTICE

- For checking of audio and operating elements, the DJ application (TRAKTOR) included with this product is used.
  TRAKTOR must be installed in your PC. For details on installation, see "5.4 HOW TO CHECK OPERATIONS USING THE TRAKTOR SOFTWARE."
  For connection of this product with a PC, be sure to use the supplied USB cable (registered jig tool), whose operation with this product is guaranteed.

Voltage Monitoring

This unit always monitors for power failure and will shut itself off immediately after an error is detected. All LEDs are unlit after an error is generated. After the unit shuts itself off because of an error, disconnect the AC adapter and USB cable and wait at least 1 minute before turning the unit back on. Repair the unit according to the diagnostic procedures described in "5.3 VOLTAGE MONITORING."

Limitations when the unit is operating on USB-bus power

There are some limitations in operations of this unit while it is operated on USB-bus power, as shown below.
- The JOG dial indicator does not light.
- Lighting of the indicators (excluding that for the JOG dial) becomes dim.
- The AUX IN and MIC connectors are disabled.
- The sound volume through the headphones is reduced.

On the EEPROM on the UCOM ASSY

No program has been stored in the EEPROM (IC2003) on the UCOM Assy (blank ROM) when it is supplied as a part for service.
After the EEPROM is replaced, be sure to copy the program for the USB controller to it. For details, see "8.4 Copying the Program for the USB Controller."

Replacement of the MAIN_UCOM

When replacement of the MAIN_UCOM (IC701) is required, order a microcomputer dedicated for service (PEG850A8-K).

2. SPECIFICATIONS
2.1 SPECIFICATIONS

AC adapter
Power.....AC 100 V to 240 V, 50 Hz/ 60 Hz
Rated current.....300 mA
Rated output.....DC 5 V, 2 A

General – Main Unit
Power consumption (when using AC adapter).....700 mA
Power consumption (when using USB bus power)....500 mA
Main unit weight.....4.9 kg (10.8 lb)
Max. dimensions.....680 mm (W) × 95.2 mm (H) × 317.7 mm (D)
(26.8 in. (W) × 3.7 in. (H) × 12.5 in. (D))
Tolerable operating temperature.....+5 °C to +35 °C (+41 °F to +95 °F)
Tolerable operating humidity.....5 % to 85 % (no condensation)

Audio Section
Rated output level
MASTER OUT 1.....4.2 Vrms
MASTER OUT 2.....2.1 Vrms
Total harmonic distortion
MASTER OUT 1.....0.006 %
MASTER OUT 2.....0.006 %
Frequency characteristic
MASTER OUT 1.....20 Hz to 20 kHz
MASTER OUT 2.....20 Hz to 20 kHz
S/ N ratio (when playing on computer)
MASTER OUT 1.....103 dB or greater (at rated output)
MASTER OUT 2.....103 dB or greater (at rated output)

Input impedance
AUX.....24 kΩ
MIC.....10 kΩ
Output impedance
MASTER OUT 1.....1 kΩ or less
MASTER OUT 2.....1 kΩ or less
PHONES.....41 Ω
Input / Output terminals
USB terminal
B type.....1 set
MASTER OUT 1 output terminal
TRS phone jack (Ø 6.3 mm).....1 set
MASTER OUT 2 output terminal
RCA pin jacks.....1 sets
PHONES output terminal
Stereo phone jack (Ø 6.3 mm).....1 set
Stereo mini phone jack (Ø 3.5 mm).....1 set
AUX input terminal
RCA pin jack.....1 sets
MIC input terminal
Phone jack (Ø 6.3 mm).....1 set

- For improvement purposes, specifications and design of this unit and the included software are subject to change without notice.

Accessories

- AC adapter
  (DWR1491)

- Power plug
  (SVYXJ8: DKX1048, DKX1049)
  (UXJCB: DKX1047)
  (FLPXJ: DKX1048, DKX1049, DKX1047, DKX1050, DKX1051)
  (KXJ5: DKX1051)
  (AXJ5: DKX1052)

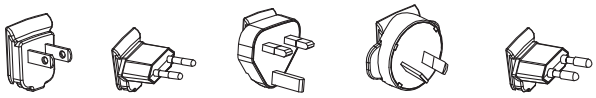

- TRAKTOR Pioneer DDJ-T1 EDITION software CD-ROM
  (DXX2665)
- Driver software CD-ROM
  (DXX2666)
- USB cable
  (DDE1140)
- Operating instructions
  (SVYXJ8: DRB1537, DRB1563)
  (UXJCB: DRB1536)
  (FLPXJ: DRB1539)
  (KXJ5: DRB1541)
  (AXJ5: DRB1540)

2.2 PANEL FACILITIES

Rear panel

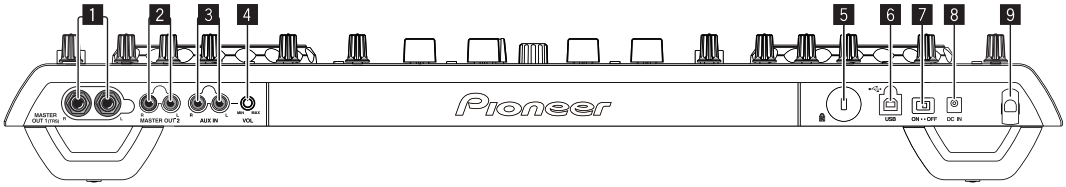

1 MASTER OUT 1 terminal
Connect powered speakers, etc., here.
This is a TRS phone jack, so both balanced and unbalanced outputs are supported.
- The sound will be distorted if the level is raised too high when using unbalanced outputs.

2 MASTER OUT 2 terminal
Connect to a power amplifier, etc.

3 AUX IN terminal
Connect to the output terminal of an external device (sampler, portable audio device, etc.)
- This cannot be used when operating on USB bus power.

4 VOL control
Adjusts the audio level input to the [**AUX IN**] terminals.

5 Kensington security slot

6 USB terminal
Connect to a computer.
- Connect this unit and the computer directly using the included USB cable.
- A USB hub cannot be used.

7 ON/OFF switch
Turns this unit's power on and off.

8 DC IN terminal
Connect to a power outlet using the included AC adapter (with the power plug mounted).
Wait until connection of all equipment is completed before connecting the AC adapter.
Only use the included AC adapter.

9 Cord hook
Catch the AC adapter's power cord and USB cable on this hook when using this unit.
- The sound will be interrupted if the AC adapter or USB cable is disconnected during playback.

Front panel

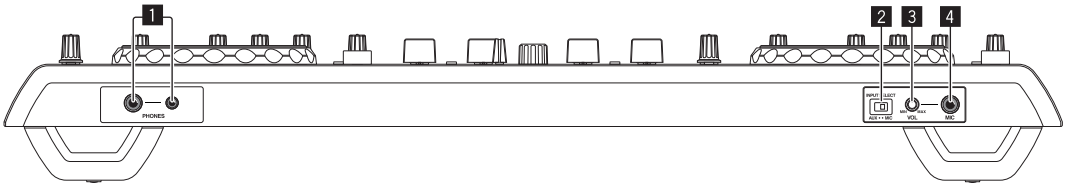

1 PHONES terminal
Connect headphones here.
Both stereo phone plugs (Ø 6.3 mm) and stereo mini phone plugs (Ø 3.5 mm) can be used.
- The volume decreases when headphones are connected simultaneously to both the stereo phone jack and the stereo mini phone jack.

2 AUX/MIC selector switch
Switches the audio input between the external device and the microphone.
— [**AUX**]: The external device connected to the [**AUX**] terminals is selected.
— [**MIC**]: The microphone connected to the [**MIC**] terminal is selected.

3 VOL control
Adjusts the audio level input to the [**MIC**] terminal.

4 MIC jack
Connect a microphone here.
- This cannot be used when operating on USB bus power.

Control panel

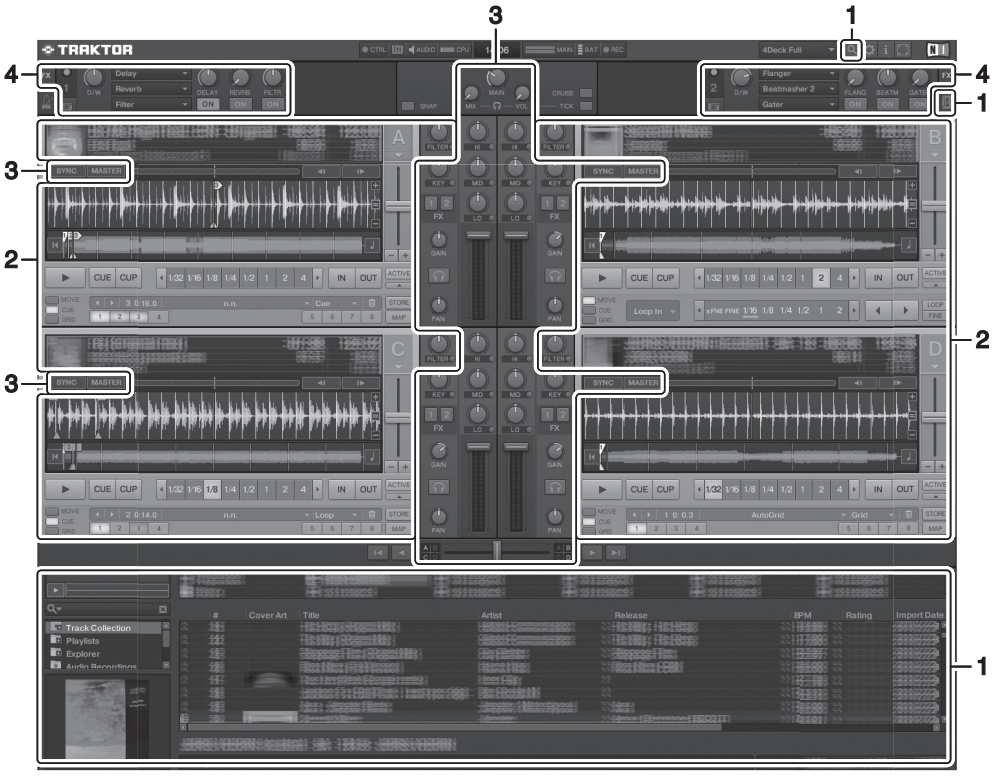

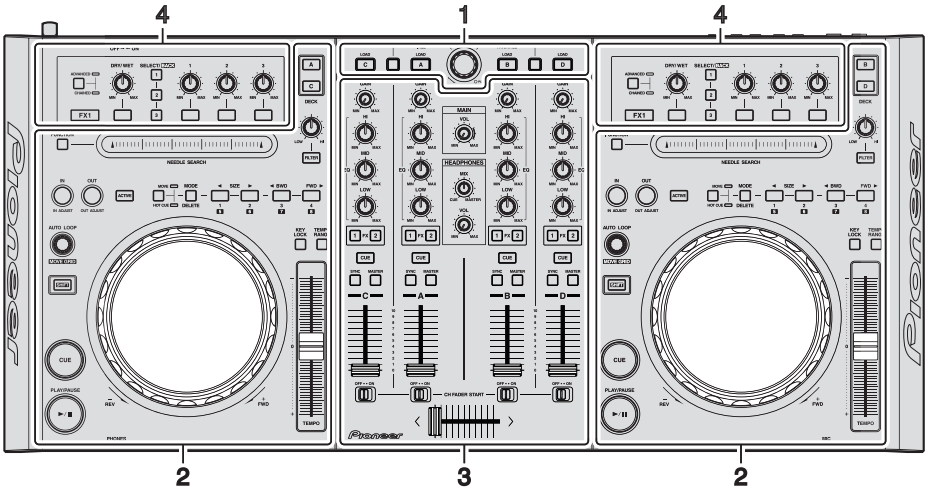

1 Browser

2 Deck

3 Mixer

4 Effect

The above screen shows just one example of the display.
The contents displayed differ according to the resolution of your computer's monitor.
The contents displayed on the screen can be changed using the procedure below.

- Click : Switches the full screen display on and off.
- Double-click the deck's track information display section (the part where the track name, BPM, etc., are displayed): Opens and closes the track information display section.
- Click [▲] under the [**ACTIVE**] button: Opens and closes the advanced panel.

1 Browser

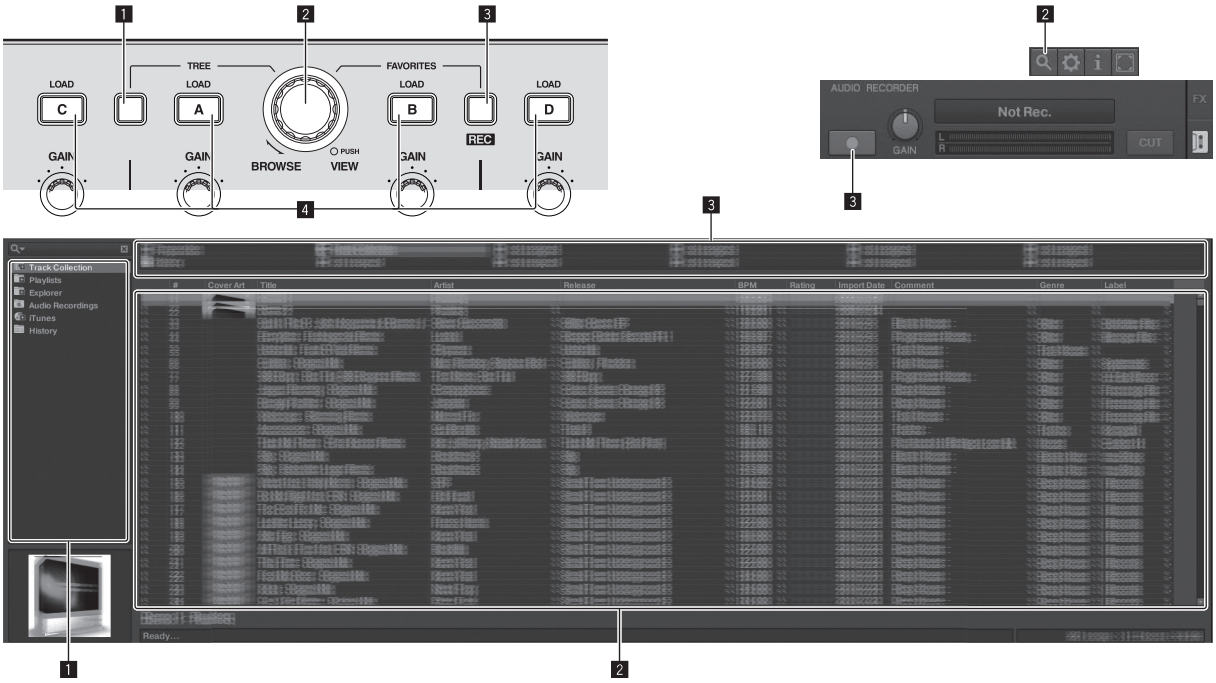

1 TREE button

- Turn the rotary selector while pressing the [**TREE**] button: Moves the cursor in the [**TREE**] area.
  The section marked 1 on the above screen is called the [**TREE**] area.
- Press the rotary selector while pressing the [**TREE**] button: Opens/closes the folder.

2 Rotary selector

- Turn the rotary selector: Moves the cursor in the [**TRACK**] area.
  The section marked 2 on the above screen is called the [**TRACK**] area.
- Press the rotary selector: Turns the enlarged display of the [**BROWSE**] area on/off.
  The [**TREE**] area, [**TRACK**] area and [**FAVORITES**] area are collectively called the [**BROWSE**] area.

Turn the rotary selector while pressing the [**SHIFT**] button: Moves the cursor in the [**TRACK**] area page by page.

3 FAVORITES (REC) button

- Turn the rotary selector while pressing the [**FAVORITES** (**REC**)] button: Moves the cursor in the [**FAVORITES**] area.
  The section marked 3 on the above screen is called the [**FAVORITES**] area.
- Press the [**FAVORITES** (**REC**)] button while pressing the [**SHIFT**] button: Starts/stops recording.
  — To display the [**AUDIO RECORDER**] panel, click the [ ] icon in the upper right of the screen.
  — Recording can be started/stopped even when the [**AUDIO RECORDER**] panel is not displayed.
  — To play files you have recorded, select [**Audio Recordings**] in the [**TREE**] area.
  The location where recorded files are stored can be checked and changed at [**Recording**] under [**Preferences**].

4 LOAD button

Loads the track selected with the cursor in each of the decks.

2 Deck

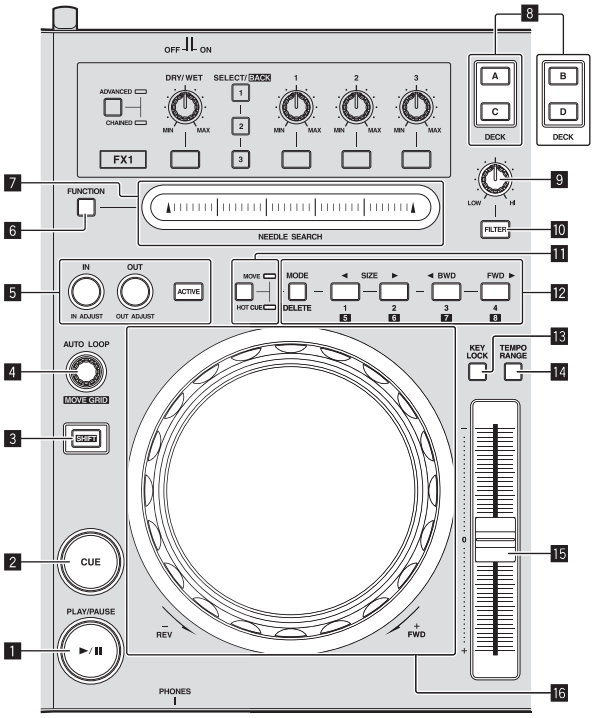

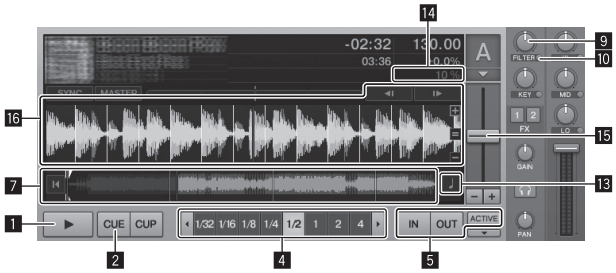

[MOVE PANEL]

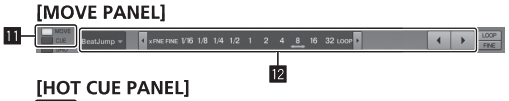

[HOT CUE PANEL]

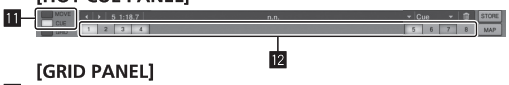

[GRID PANEL]

1 PLAY/PAUSE ►/II button

Use this to play/pause tracks.

2 CUE button

When the [**CUE**] button is pressed while pausing, the cue point is set at the position where playback is pausing.

- When TRAKTOR's [**SNAP**] function is on: The cue and loop points can be set at the desired position.
- When TRAKTOR's [**SNAP**] function is on: The cue and loop points are set to the nearest [**Beat Grid**].

When the [**CUE**] button is pressed during playback, playback returns to the set cue point, cues there, and the pause mode is set (back cue).

When you keep pressing the [**CUE**] button after returning to the cue point, playback continues as long as the button is pressed.

3 SHIFT button

When another button is pressed while pressing the [**SHIFT**] button, a different function is called out.

4 AUTO LOOP (MOVE GRID) control

- Turn the [**AUTO LOOP** (**MOVE GRID**)] control: Changes the loop size.
- Press the [**AUTO LOOP** (**MOVE GRID**)] control: Switches loop playback on/off.
- Turn the [**AUTO LOOP** (**MOVE GRID**)] control while pressing the [**SHIFT**] button: The [**Beat Grid**] can be adjusted.
  This adjusts the difference with the results of analysis.
  — When adjusting the [**Beat Grid**], create at least one [**BEAT MARKER**].
  — When creating [**BEAT MARKER**], set the hot cue [**CUE TYPE**] to [**Grid**].
  — [**CUE TYPE**] (the type of hot cue) can be changed by clicking [▼] to the left of the [🗑] icon.

5 IN (IN ADJUST) button, OUT (OUT ADJUST) button, ACTIVE button

- **IN** (**IN ADJUST**) button
  During playback, press the [**IN** (**IN ADJUST**)] button at the position at which you want to start loop playback (the loop in point) to set the loop in point.
  The loop in point can be fine-adjusted by pressing the [**IN** (**IN ADJUST**)] button during loop playback then using the jog dial.
  — During fine-adjustment of the loop point, the [**IN** (**IN ADJUST**)] button flashes rapidly and the [**OUT** (**OUT ADJUST**)] button is off.
  — To return to normal loop playback, press the [**IN** (**IN ADJUST**)] button.
  Real-time cue: When the [**IN** (**IN ADJUST**)] button is pressed during playback, the cue point is set at the position at which the button was pressed.
- **OUT** (**OUT ADJUST**) button
  Press the [**OUT** (**OUT ADJUST**)] button at the position at which you want to stop loop playback (the loop out point) to set the loop out point.
  The loop out point is set, playback returns to the loop in point and loop playback starts.
  The loop out point can be fine-adjusted by pressing the [**OUT** (**OUT ADJUST**)] button during loop playback then using the jog dial.
  After switching [**MOVE MODE**] to [**Loop Out**], use the jog dial to fine-adjust the loop out point.
  — During fine-adjustment of the loop out point, the [**OUT** (**OUT ADJUST**)] button flashes rapidly and the [**IN** (**IN ADJUST**)] button is off.
  — To return to normal loop playback, press the [**OUT** (**OUT ADJUST**)] button.
- **ACTIVE** button
  Switches loop playback on/off.

6 FUNCTION button

Switches the [**NEEDLE SEARCH**] pad's function.

7 NEEDLE SEARCH pad

- When the [**FUNCTION**] button is off:
  The [**NEEDLE SEARCH**] function can be used.
  — The sound at the position at which the [**NEEDLE SEARCH**] pad is touched can easily be played.
- When the [**FUNCTION**] is on:
  The desired function can be assigned.
  — Upon purchase, nothing is assigned.

8 DECK button
Switches the deck to be operated.
- Deck on left side of this unit: Deck [**A**] or [**C**]
- Deck on right side of this unit: Deck [**B**] or [**D**]

9 Filter control
- Turn counterclockwise while filter function is on: Low pass filter.
- Turn clockwise while filter function is on: High pass filter.

10 FILTER button
Switches the filter function on/off.

11 MOVE/HOT CUE selector button
Switches [**Move Panel**] and [**Cue Panel**] in the advanced panel.
- To open the advanced panel, click [▼] below [**ACTIVE**] in TRAKTOR.

12 MOVE PANEL/HOT CUE PANEL
- **MOVE PANEL** operation
  [**MOVE MODE**] (the loop moving mode) switches each time the [**MODE DELETE**] button is pressed.

  → [**Beat Jump**] → [**Loop**] → [**Loop In**] → [**Loop Out**] →

  — [**Beat Jump**]: The position of playback moves.
  — [**Loop**]: The loop moves.
  — [**Loop In**]: The loop in point moves.
  — [**Loop Out**]: The loop out point moves.
  Use the [**SIZE** ◄/►] buttons to set the amount of movement of the playback position or loop by fractions of the beat.
  Use the [◄ **BWD**/**FWD** ►] buttons to move the playback position or loop by the amount of movement set with the [**SIZE** ◄/►] buttons.
- **HOT CUE PANEL** operation
  When a button at which nothing is set is pressed in the play or pause mode, a hot cue ([**1**] – [**4**]) is set at the position at which the button was pressed.
  When a button at which a hot cue ([**1**] – [**4**]) is set is pressed in the play or pause mode, a hot cue ([**1**] – [**4**]) is called out.
  To cancel a hot cue ([**1**] – [**4**]), press the corresponding button ([**1**] – [**4**]) while pressing the [**DELETE**] button.
  Buttons [**1**] – [**4**] at which hot cues are set flash while the [**DELETE**] button is pressed.
  — To set or call out hot cues [**5**] to [**8**], press buttons [**1**] to [**4**] while pressing the [**SHIFT**] button.
  — To delete a hot cue from [**5**] to [**8**], press buttons [**1**] to [**4**] while pressing the [**SHIFT**] and [**DELETE**] buttons.
  — [**CUE TYPE**] (the type of hot cue) can be changed by clicking [▼] to the left of the [🗑] icon.

13 KEY LOCK button
Switches the key lock function on/off.
When the key lock function is on, the key does not change even when the playing speed is changed with the [**TEMPO**] slider.

14 TEMPO RANGE button
The [**TEMPO**] slider's range of variation switches each time this is pressed.

→ [±6] → [±10] → [±16] → [±100] →

15 TEMPO slider
- Move towards the + (front) side: The playing speed increases.
- Move towards the – (back) side: The playing speed decreases.

16 Jog dial
- Scratch
  Spin the jog dial while pressing down on the top: The sound is played according to the direction and speed of rotation.
- Pitch bend
  During playback, spin the outer section of the jog dial.
  — Spin clockwise: The playing speed increases.
  — Spin counterclockwise: The playing speed decreases.
  — Stop spinning: Playback at the normal speed resumes.

3 Mixer

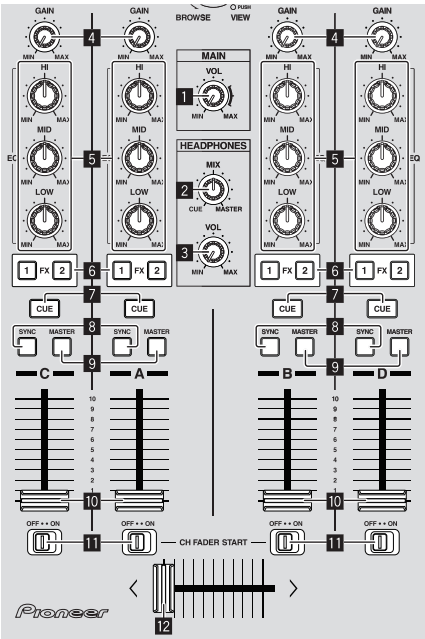

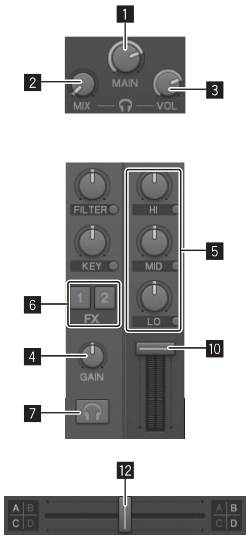

1 MAIN VOL control
Adjusts the sound level output from the master.

2 HEADPHONES MIX control
Adjusts the monitor volume balance between the sound of the deck for which the [**CUE**] button is pressed and the sound of [**MASTER OUT 1**] and [**MASTER OUT 2**].

3 HEADPHONES VOL control
Adjusts the audio level output from the [**PHONES**] terminal.

4 GAIN control
Adjusts the sound level input to the various decks.

5 EQ (HI, MID, LOW) controls
These adjust the sound quality input to the various decks.
These adjust the [**HI**] (high range), [**MID**] (medium range) and [**LOW**] (low range), respectively.

6 Effect assign buttons
Press the [**1**] or [**2**] button to assign TRAKTOR effect unit [**FX 1**] or [**FX 2**] to the deck.

7 CUE button
The sound of decks for which the headphones [**CUE**] button is pressed can be monitored over headphones.
When multiple headphones [**CUE**] buttons are pressed, the sound of the decks for which the buttons are pressed is mixed and output from the headphones.

8 SYNC button
The track on the deck for which the [**SYNC**] button is pressed is synchronized to the [**BPM**] and [**Beat Grid**] of the deck for which the [**MASTER**] button is pressed or of the master clock.

9 MASTER button
Sets the tempo of the deck for which the [**MASTER**] button is pressed as the master for synchronizing with the beat sync function.

10 Channel fader
Adjusts the sound level output from the various decks.

11 CH FADER START switch
Switches the [**CH FADER START**] function on/off.
When the [**CH FADER START**] switch is set to [**ON**], the fader start and back cue functions can be used according to the movement of the channel faders.
- Fader start: When the channel fader is moved from the front-most position towards the back while pausing at the cue point, playback starts immediately.
- Back cue: When the channel fader is returned from the back to the front-most position, playback returns to the set cue point, cues there, and the pause mode is set immediately.

12 Crossfader
Switches the sound of the decks assigned to the left and right sides of the crossfader for output.
The deck assignment can be changed with the [**Deck Assign Button**] at the sides of the TRAKTOR crossfader.

> Do not pull on the channel fader and crossfader knobs with excessive force. The knobs are not designed to be removed. Pulling the knobs strongly may result in damaging the unit.

4 Effect

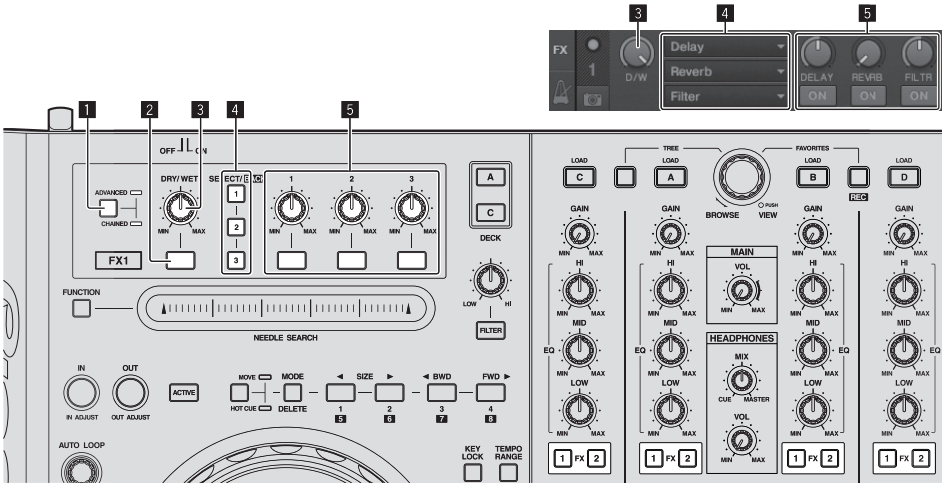

> - The [**Advanced**] mode cannot be selected with TRAKTOR Pioneer DDJ-T1 EDITION.
> - The effect panel can be switched to the [**Advanced**] mode when you upgrade to TRAKTOR PRO or TRAKTOR SCRATCH PRO.

1 ADVANCED/CHAINED selector button
- [**Chained**] mode: Up to 3 effects can be selected on the effect panels and operated simultaneously.
- [**Advanced**] mode: The parameters of the one selected effect can be adjusted in detail.

2 Effect button
This button is exclusively for use in the [**Advanced**] mode.

3 DRY/WET control
Changes the balance between the effect sound and original sound.

4 SELECT/BACK button
The effect type switches each time the button is pressed.
With TRAKTOR Pioneer DDJ-T1 EDITION, the 6 types of effects below can be used.

[no Effect] ➤ [Delay] ➤ [Reverb] ➤ [Filter] ➤ [Beatmasher2] ➤ [Gater] ➤ [Flanger]

— When the [**SELECT/BACK**] button is pressed while pressing the [**SHIFT**] button, the direction in which the effect types switch is reversed.

— When in the [**Advanced**] mode, the effect type is switched by pressing the [**1**] button for [**SELECT/BACK**].

5 Effect control
- Effect control dials
  The linked functions differ depending on the TRAKTOR effect panel's mode.
  — [**Chained**] mode: Adjusts the balance between the effect sound of the each effects and the original sound.
  — [**Advanced**] mode: Adjusts the various parameters of the selected effect.
- Effect control buttons
  The linked functions differ depending on the TRAKTOR effect panel's mode.
  — [**Chained**] mode: Switches the various effects on/off.
  — [**Advanced**] mode: When the effect control [**1**] button is pressed, all the effect setting values return to the default setting values.
  When effect control buttons [**2**] and [**3**] are pressed, the various parameters switch between on and off. The types of parameters differ according to the effect.

3. BASIC ITEMS FOR SERVICE

3.1 CHECK POINTS AFTER SERVICING

Items to be checked after servicing

To keep the product quality after servicing, confirm recommended check points shown below.

No.	Procedures	Check points
1	Confirm that the customer complaint has been resolved. If the problem pointed out by the customer occurs with a specific source or operation, such as PC input, AUX/MIC input, Fader, or VOL, input that specific source then perform that specific operation for checking.	The customer complain must not be reappeared. Audio and operations must be normal.
2	Confirmation of operation of operating elements ① Enter Service mode.	There must be no errors in operations of each button, LED, the JOG dial, and NeedleSearch.
3	Confirmation of operation of operating elements ② Connect this unit with a PC with the DJ application (TRAKTOR) installed, via USB.	There must be no errors in operations of volume controls, faders, and rotary encoders.
4	Check the analog audio output. Connect this unit with a PC with the DJ application (TRAKTOR) installed, via USB, then play back audio	There must be no errors, such as noise, in audio signals and operations of the MASTER/HEADPHONES outputs.
5	Check the analog audio input. Input an audio signal via AUX/MIC. (Make the input settings, referring to “Inputting Audio from Microphones or External Equipment” in the Operating Instructions.)	Audio and operations must be normal.
6	Confirmation of USB-bus Power Disconnect the AC adapter and operate the unit only on USB-bus power.	Audio and operations must be normal. (For details on limitations of USB-bus power, refer to the Operating Instructions.)
7	Check the appearance of the product.	No scratches or dirt on its appearance after receiving it for service.

See the table below for the items to be checked regarding audio.

Item to be checked regarding audio
Distortion
Noise
Volume too low
Volume too high
Volume fluctuating
Sound interrupted

3.2 JIGS LIST

■ Jigs List

Jig Name	Part No.	Purpose of use / Remarks
USB cable	GGP1188	for PC connection, accessory
AC adapter	DWR1491	Accessory (Note: The power plug part is different.)

■ Lubricants and Glues List

Name	Part No.	Remarks
Lubricating oil	GYA1001	Refer to “9.5 JOG SECTION”.

3.3 PCB LOCATIONS

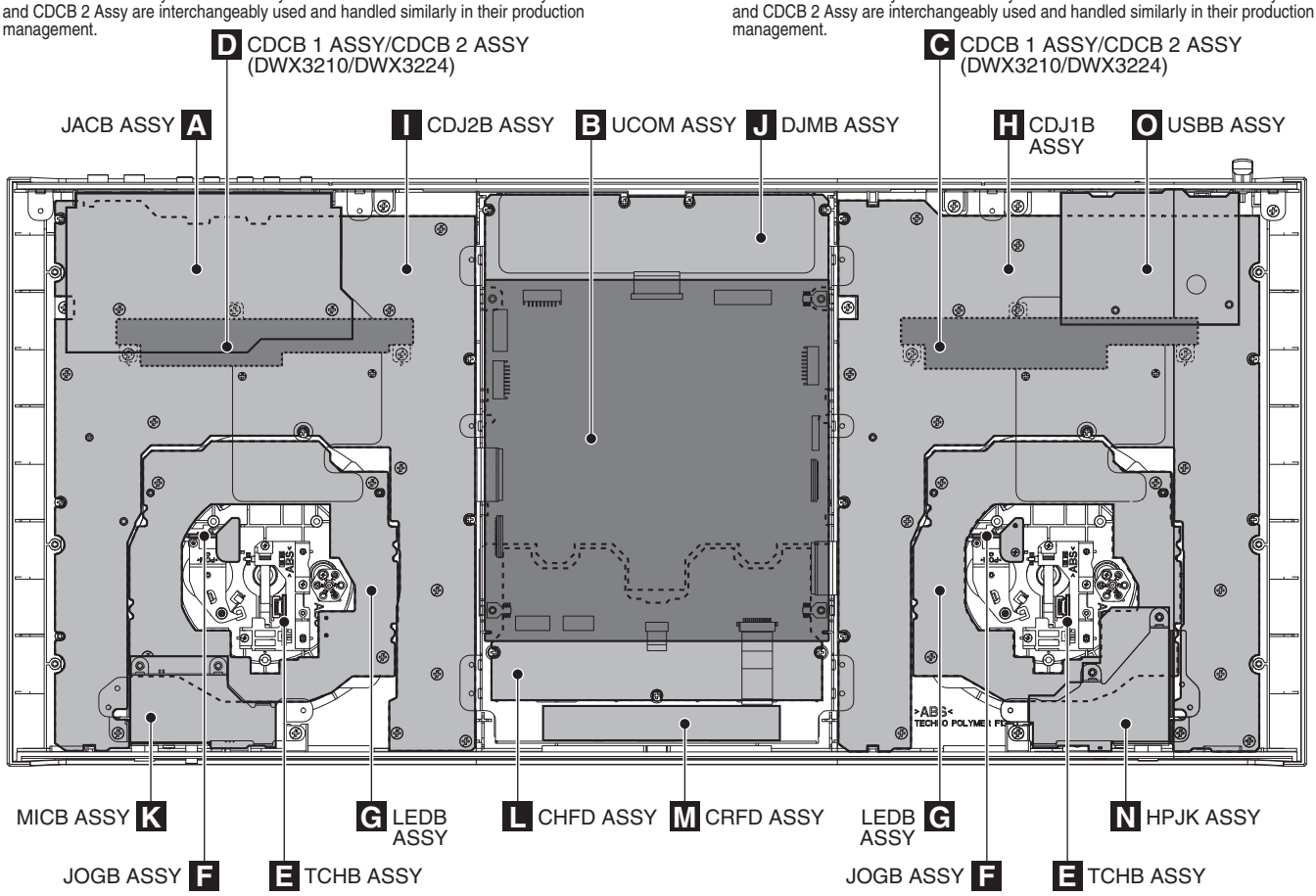

• Bottom view

NOTES: ● *Parts marked by "NSP" are generally unavailable because they are not in our Master Spare Parts List.*
● *The ⚠ mark found on some component parts indicates the importance of the safety factor of the part. Therefore, when replacing, be sure to use parts of identical designation.*

LIST OF ASSEMBLIES

Mark	No.	Description	Part No.
NSP	1..	MAIN ASSY	DWM2421
	2..	UCOM ASSY	DWX3209
	2..	CDCB 1 ASSY	DWX3210
	2..	CDCB 2 ASSY	DWX3224
NSP	1..	CDJ1 ASSY	DWM2422
	2..	CDJ1B ASSY	DWS1430
	2..	JOGB ASSY	DWS1432
	2..	TCHB ASSY	DWS1433
	2..	LEDB ASSY	DWS1434
NSP	1..	CDJ2 ASSY	DWM2423
	2..	CDJ2B ASSY	DWS1431
	2..	JOGB ASSY	DWS1432
	2..	TCHB ASSY	DWS1433
	2..	LEDB ASSY	DWS1434

Mark	No.	Description	Part No.
NSP	1..	DJM1 ASSY	DWM2424
	2..	CHFD ASSY	DWX3212
	2..	CRFD ASSY	DWX3213
	2..	MICB ASSY	DWX3215
	2..	HPJK ASSY	DWX3216
NSP	1..	DJM2 ASSY	DWM2426
	2..	DJMB ASSY	DWX3211
	2..	JACB ASSY	DWX3214
	2..	USBB ASSY	DWX3222

A

B

C

D

E

F

4. BLOCK DIAGRAM
4.1 OVERALL WIRING DIAGRAM

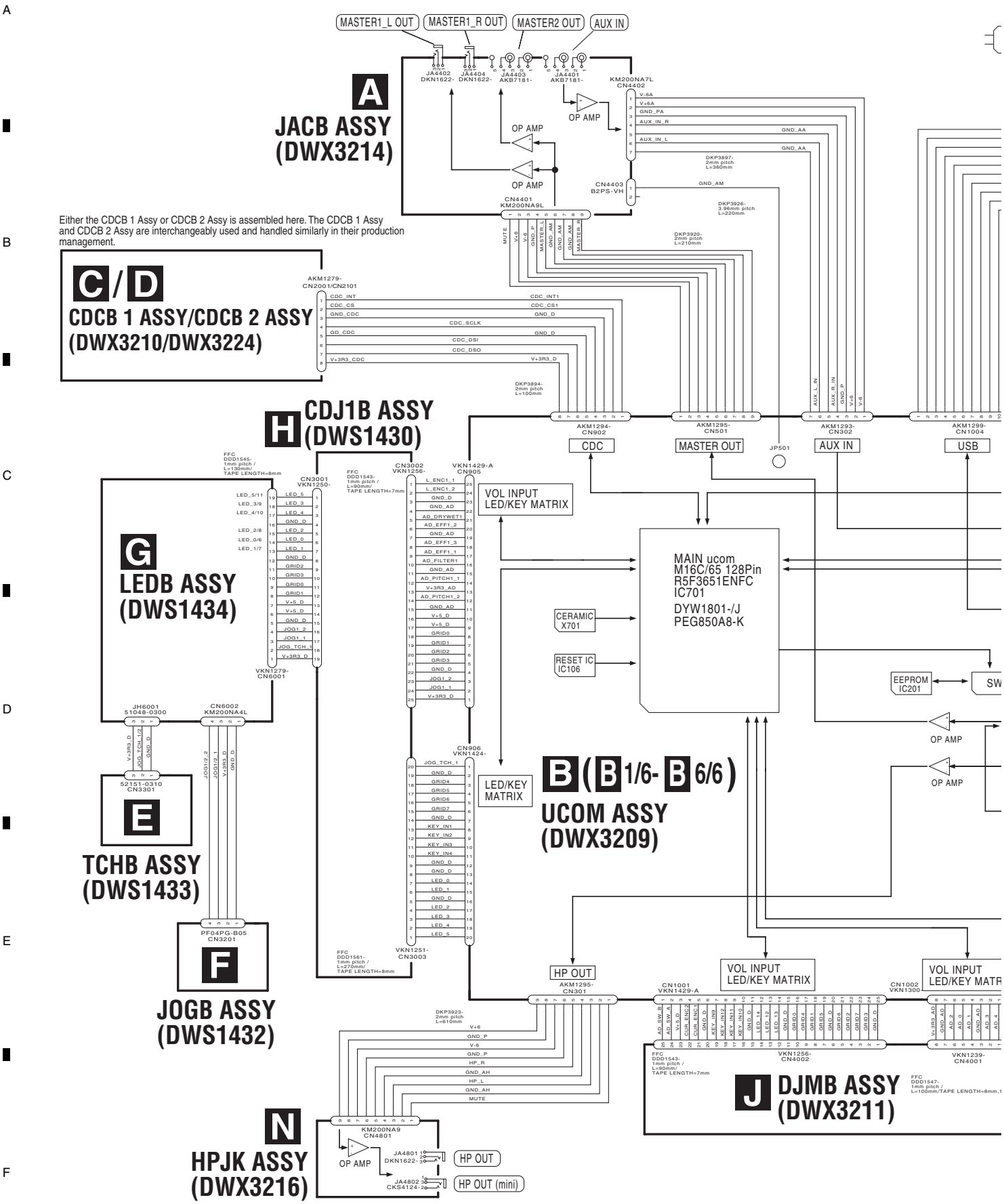

- When ordering service parts, be sure to refer to "EXPLODED VIEWS and PARTS LIST" or "PCB PARTS LIST".
- The ⚠ mark found on some component parts indicates the importance of the safety factor of the part.
  Therefore, when replacing, be sure to use parts of identical designation.
- : The power supply is shown with the marked box.

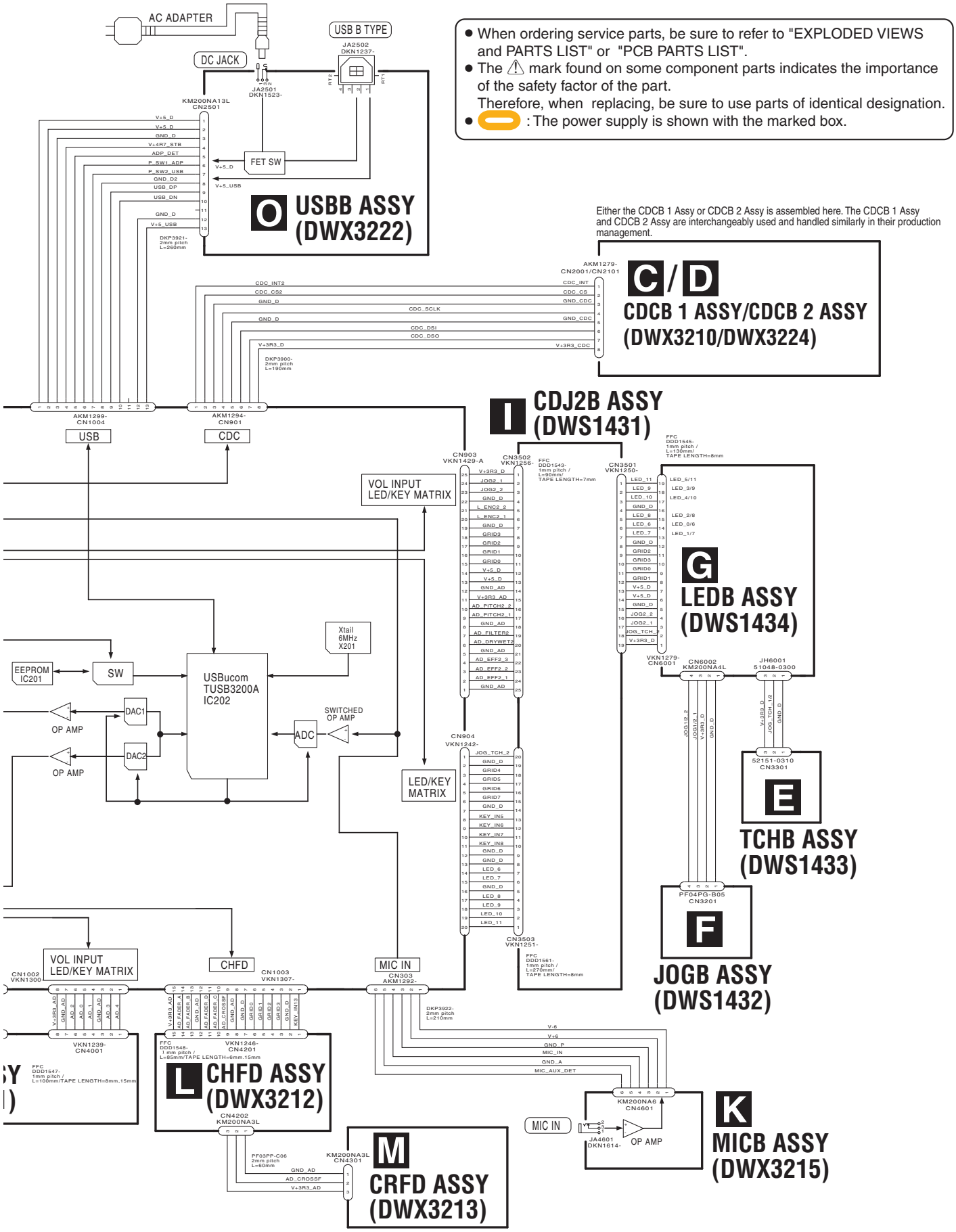

4.2 OVERALL BLOCK DIAGRAM

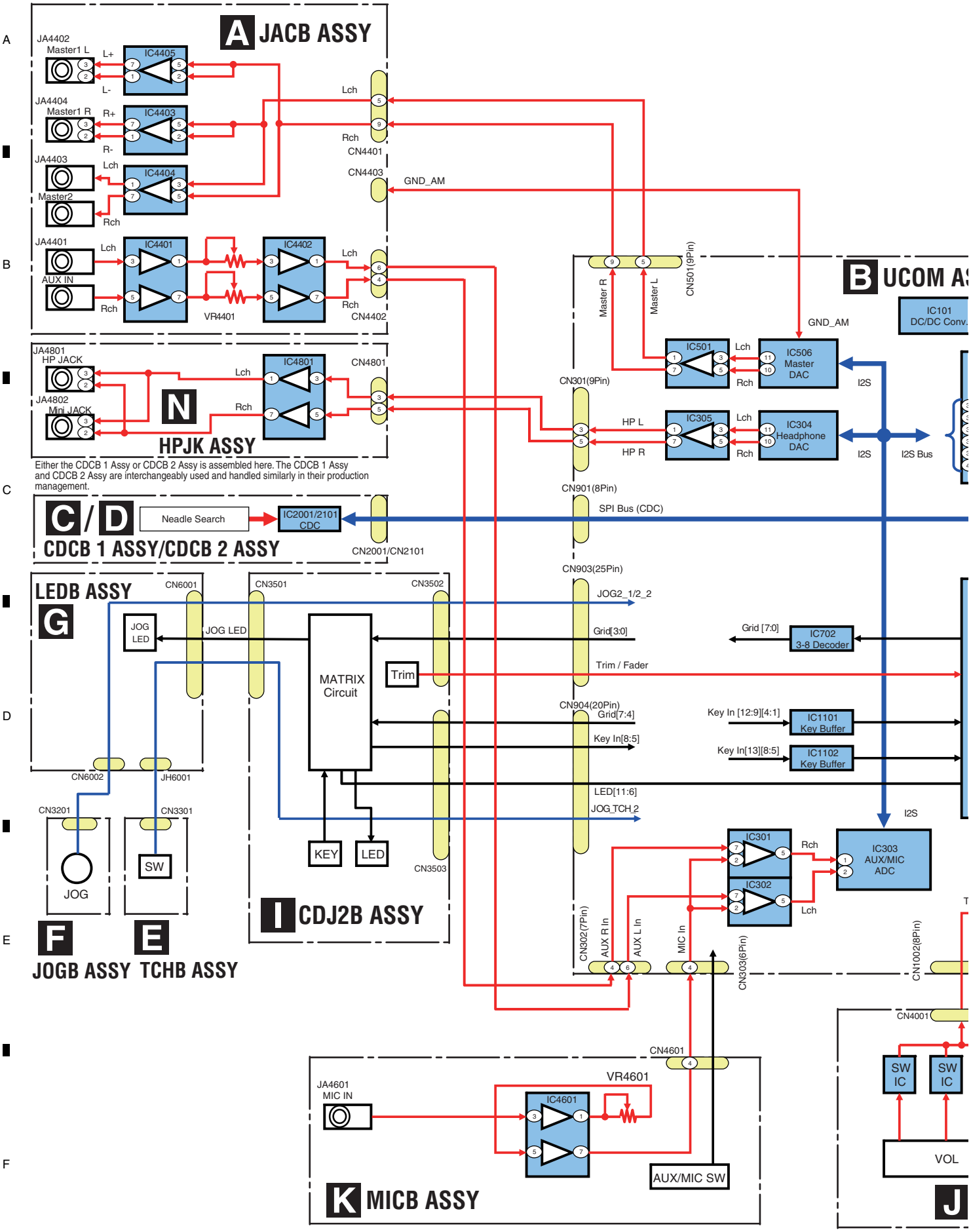

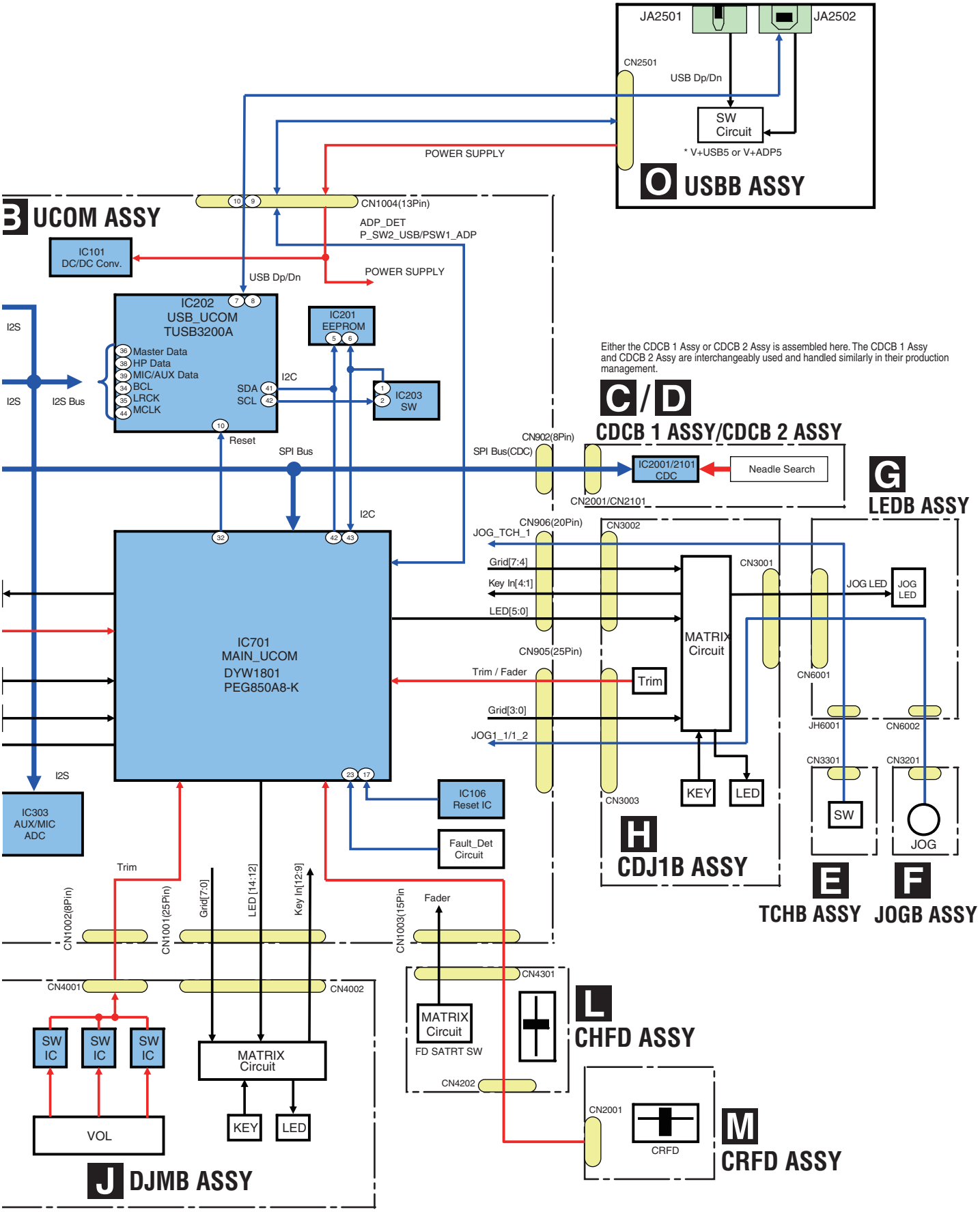
JA2501
JA2502
CN2501
USB Dp/Dn
SW Circuit
* V+USB5 or V+ADP5
POWER SUPPLY
O USBB ASSY
B UCOM ASSY
CN1004(13Pin)
ADP_DET
P_SW2_USB/PSW1_ADP
IC101 DC/DC Conv.
USB Dp/Dn
POWER SUPPLY
IC202 USB_UCOM TUSB3200A
Master Data
HP Data
MIC/AUX Data
BCL
LRCK
MCLK
SDA
SCL
I2C
IC201 EEPROM
IC203 SW
I2S
I2S Bus
Reset
SPI Bus
Either the CDCB 1 Assy or CDCB 2 Assy is assembled here. The CDCB 1 Assy and CDCB 2 Assy are interchangeably used and handled similarly in their production management.
C / D
CDCB 1 ASSY/CDCB 2 ASSY
CN902(8Pin)
SPI Bus(CDC)
IC2001/2101 CDC
Neadle Search
CN2001/CN2101
G
LEDB ASSY
CN906(20Pin)
CN3002
JOG_TCH_1
Grid[7:4]
Key In[4:1]
LED[5:0]
CN3001
JOG LED
JOG LED
IC701 MAIN_UCOM DYW1801 PEG850A8-K
MATRIX Circuit
CN905(25Pin)
Trim / Fader
Trim
CN6001
Grid[3:0]
JOG1_1/1_2
JH6001
CN6002
CN3301
CN3201
IC303 AUX/MIC ADC
IC106 Reset IC
Fault_Det Circuit
KEY
LED
CN3003
SW
JOG
H
CDJ1B ASSY
E
F
TCHB ASSY
JOGB ASSY
Trim
CN1002(8Pin)
CN1001(25Pin)
Grid[7:0]
LED [14:12]
Key In[12:9]
CN1003(15Pin
Fader
CN4001
CN4002
CN4301
MATRIX Circuit
FD SATRT SW
L
CHFD ASSY
CN4202
SW IC
SW IC
SW IC
MATRIX Circuit
VOL
KEY
LED
CN2001
CRFD
M
CRFD ASSY
J DJMB ASSY

4.3 POWER BLOCK DIAGRAM

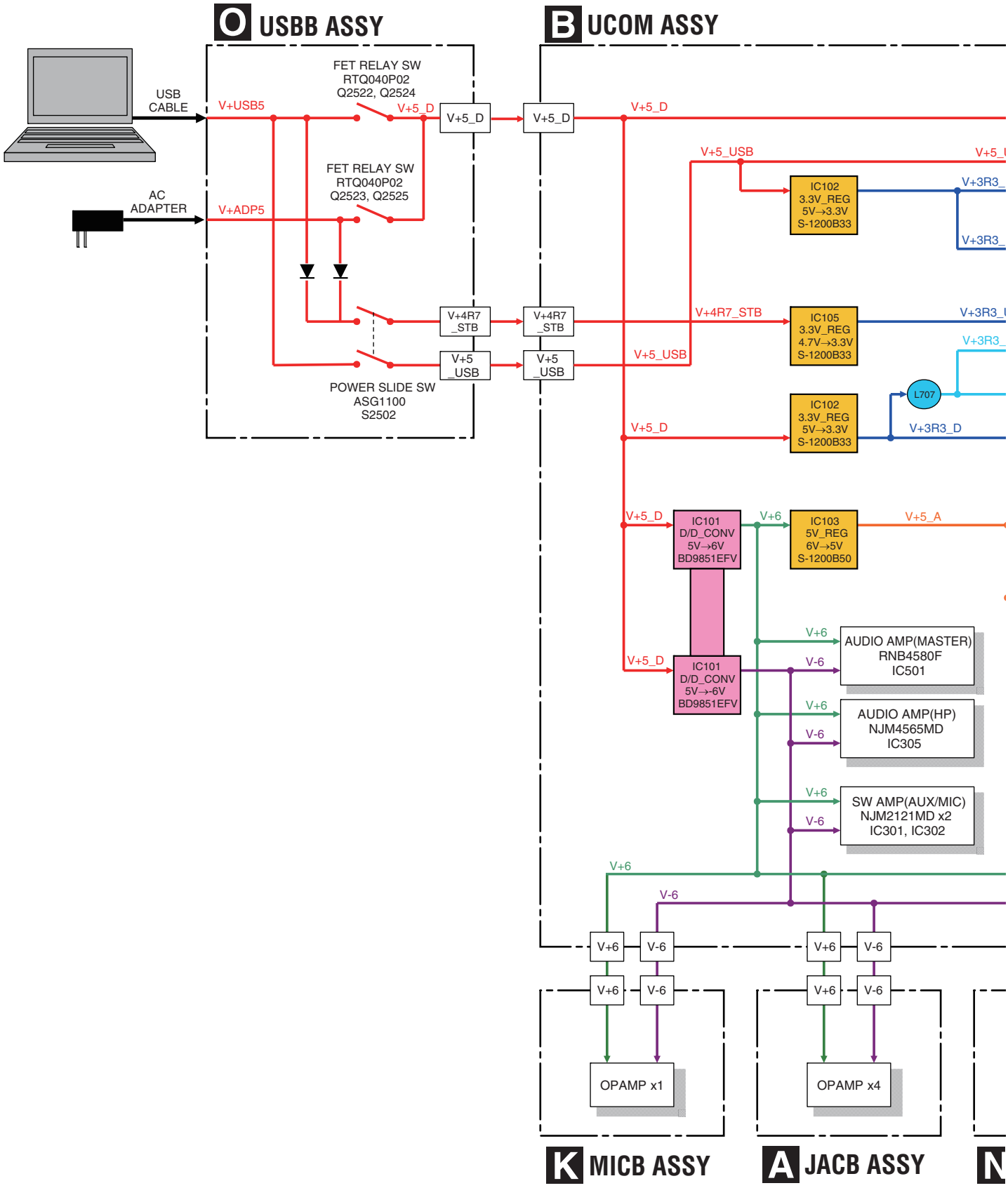

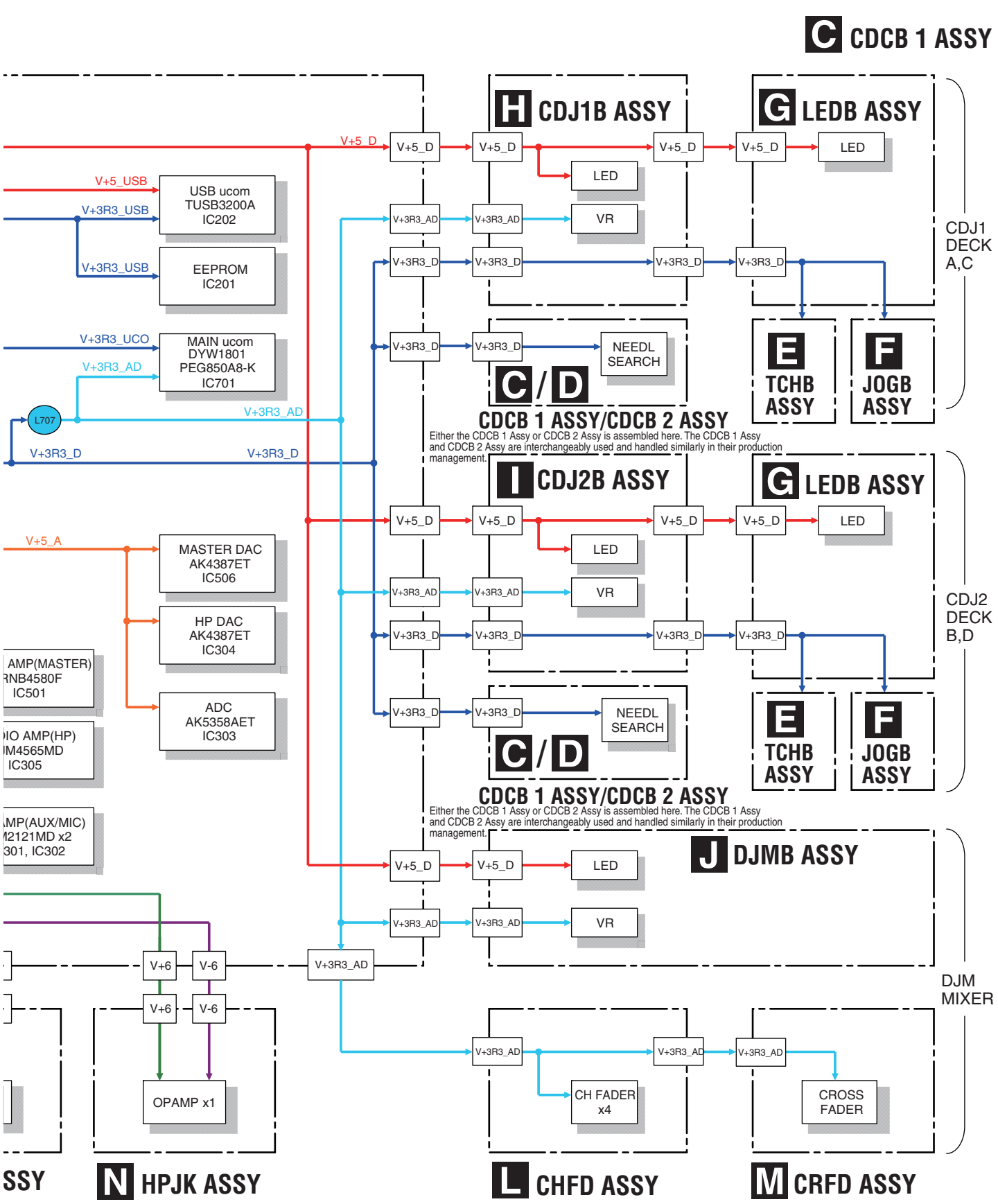
C CDCB 1 ASSY
H CDJ1B ASSY
G LEDB ASSY
V+5_D
V+5_D
V+5_D
V+5_D
V+5_D
LED
LED
V+5_USB
USB ucom
TUSB3200A
IC202
V+3R3_USB
V+3R3_AD
V+3R3_AD
VR
V+3R3_USB
EEPROM
IC201
V+3R3_D
V+3R3_D
V+3R3_D
V+3R3_D
CDJ1
DECK
A,C
V+3R3_UCO
MAIN ucom
DYW1801
PEG850A8-K
IC701
V+3R3_AD
V+3R3_D
V+3R3_D
NEEDL
SEARCH
C / D
E
TCHB
ASSY
F
JOGB
ASSY
L707
V+3R3_AD
V+3R3_D
V+3R3_D
CDCB 1 ASSY/CDCB 2 ASSY
Either the CDCB 1 Assy or CDCB 2 Assy is assembled here. The CDCB 1 Assy
and CDCB 2 Assy are interchangeably used and handled similarly in their production
management.
I CDJ2B ASSY
G LEDB ASSY
V+5_D
V+5_D
V+5_D
V+5_D
V+5_D
LED
LED
V+5_A
MASTER DAC
AK4387ET
IC506
V+3R3_AD
V+3R3_AD
VR
HP DAC
AK4387ET
IC304
V+3R3_D
V+3R3_D
V+3R3_D
V+3R3_D
CDJ2
DECK
B,D
AMP(MASTER)
RNB4580F
IC501
ADC
AK5358AET
IC303
IO AMP(HP)
M4565MD
IC305
V+3R3_D
V+3R3_D
NEEDL
SEARCH
C / D
E
TCHB
ASSY
F
JOGB
ASSY
CDCB 1 ASSY/CDCB 2 ASSY
Either the CDCB 1 Assy or CDCB 2 Assy is assembled here. The CDCB 1 Assy
and CDCB 2 Assy are interchangeably used and handled similarly in their production
management.
MP(AUX/MIC)
2121MD x2
301, IC302
J DJMB ASSY
V+5_D
V+5_D
LED
V+3R3_AD
V+3R3_AD
VR
V+6
V-6
V+3R3_AD
DJM
MIXER
V+6
V-6
V+3R3_AD
V+3R3_AD
V+3R3_AD
OPAMP x1
CH FADER
x4
CROSS
FADER
SSY
N HPJK ASSY
L CHFD ASSY
M CRFD ASSY

5. DIAGNOSIS
5.1 POWER ON SEQUENCE

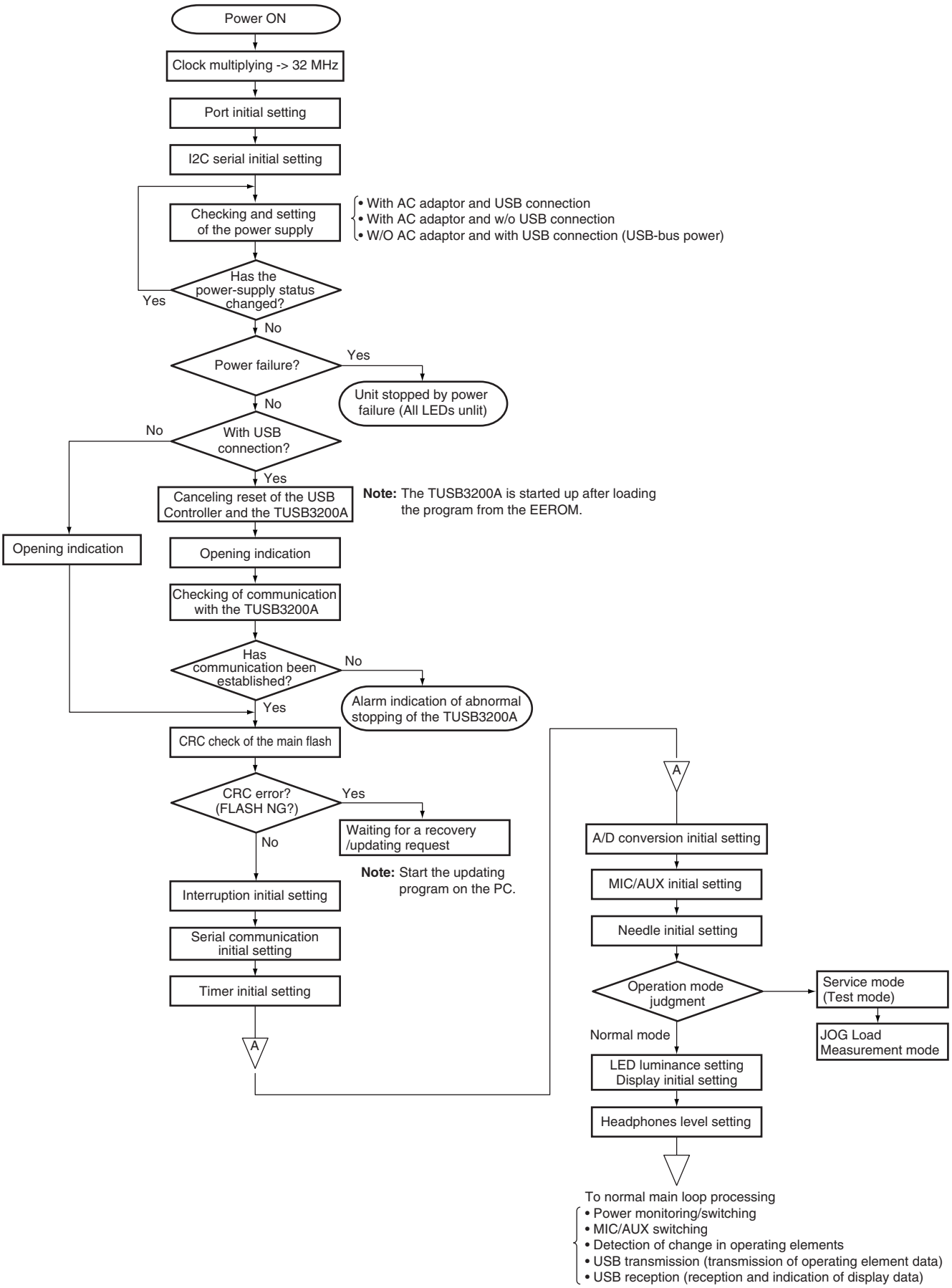

5.2 TROUBLESHOOTING

In this section, causes of failure, diagnostics points, and corrective measures can be searched for according to symptoms. Before disassembling this unit, it is recommended to infer a failure point by referring to the error code.

For the relationship of each power-supply system, see “4.3 POWER SUPPLY BLOCK DIAGRAM.”
If software of the product is updated before performing diagnostics, check that software updating has been performed properly before proceeding to diagnostics.
If software updating has not been performed properly, update the software, following the instructions in “8.3 UPDATING OF THE FIRMWARE.”

Contents

The waveform numbers and voltage confirmation-point numbers described in this section correspond to the numbers on the schematic diagrams and PCBs.
Be sure to check the failure points, as well as checking for failure in their peripheral circuits.

[0] Prior Confirmation

[0-1] Checking in Service Mode

No.	Cause/Symptom	Point to be checked	Item to be checked	How to distinguish a defective point and/or corrective action	Reference
1	–	Service Mode	Identify a failure point.	After a failure point is identified, see the section referenced in this manual.	6. SERVICE MODE

[0-2] Checking Internal Cables

No.	Cause/Symptom	Point to be checked	Item to be checked	How to distinguish a defective point and/or corrective action	Reference
1	Disconnection, breakage, or loose connection of internal cables	Cables	Check that all the cables are securely connected. Check that there is no breakage in the cables.	Securely connect a cable if it is not connected. If a cable is broken, replace it. Note: If an FFC cable is disconnected, be careful of the orientation of the contacts when reconnecting it, referring to the printed guide on the board.	4.1 OVERALL CONNECTION DIAGRAM

[1] Failure in Startup (Failure in power-on, all LEDs unlit)

[1-1] Failure in the power system

In a case where the unit does not start up, even after it is turned ON, when it is powered via the AC adapter or USB-bus power connection.

No.	Cause/Symptom	Point to be checked	Item to be checked	How to distinguish a defective point and/or corrective action	Reference
1	Failure in the AC adapter	USBB Assy V+ADP5	Set the POWER switch to OFF. Check that the voltage of the V+ADP5 power line is in the range of 4.75–5.25 V.	If the voltage is outside the range of 4.75–5.25 V, failure in the AC adapter and its periphery may be suspected. AC adapter (DWR1491), DC jack (JA2501), FETs (Q2523, Q2525), Tra ( )	4.3 POWER SUPPLY BLOCK DIAGRAM 10.17 WAVEFORMS AC adapter ④
2	Failure in USB-bus power	USBB Assy V+USB5	Set the POWER switch to OFF. Check that the voltage of the V+ADP5 power line is in the range of 4.75–5.25 V.	If the voltage is outside the range of 4.75–5.25 V, failure in the USB-bus power and its periphery may be suspected. Check the USB cable and USB connector.	4.3 POWER SUPPLY BLOCK DIAGRAM 10.17 WAVEFORMS Power bus power ①
3-1	Power failure in the MAIN_UCOM on the UCOM Assy	UCOM Assy MAIN_UCOM	Set the POWER switch to ON. If V+3R3_UCOM is abnormal (2.7 V or less) and V+4R7_STB is normal (4.2–5.0 V)	The regulator (IC105), the MAIN_UCOM (IC701), or their peripheral circuits may be defective.	4.3 POWER SUPPLY BLOCK DIAGRAM
3-2	Power failure in the USB_UCOM on the UCOM Assy	UCOM Assy USB_UCOM	Set the POWER switch to ON. If V+3R3_USB is abnormal (2.7 V or less) and the V+5_USB is normal (4.5 V–5.25 V)	The regulator (IC102), the USB_UCOM (IC202), or their peripheral circuits may be defective.	4.3 POWER SUPPLY BLOCK DIAGRAM

No.	Cause/Symptom	Point to be checked	Item to be checked	How to distinguish a defective point and/or corrective action	Reference
4-1	Power failure ①	UCOM Assy FAULT_DET	Check if the voltage monitoring circuit was activated: Turn the unit ON then check the voltages shown below. V+5_D: FAULT_DET, R147 (0 Ω) :	Turn the unit ON then check the voltages shown below. V+5_D: 2 V or less (abnormal voltage), 4.5 V or higher (normal voltage) FAULT_DET, R147(0 Ω): 0 V (abnormal voltage detection), 3.3 V (normal voltage) In a case of abnormal voltage detection, see [4–2] Power failure ②. In a case of normal voltage, poor control over the microcomputer system may be suspected.	4.3 POWER SUPPLY BLOCK DIAGRAM 5.3 VOLTAGE MONITORING 10.17 WAVEFORMS Abnormal voltage detection ⑳, ㉕
4-2	Power failure ② Identification of defective Assy	UCOM Assy FAULT_DET CDJB CDCB DJMB JACB HPJK MICB	Identify the Assy on which a voltage error was generated. Remove all cables other than the cable for CN1004 (USBB to UCOM) from the UCOM Assy. Turn the unit ON then check the V+5_D voltage. V+5_D: FAULT_DET, R147 (0 Ω):	Remove all cables other than the cable for CN1004 (USBB to UCOM) from the UCOM Assy. Turn the unit ON then check the V+5_D voltage. V+5_D: 4.5 V or higher (normal) FAULT_DET, R147(0 Ω): 3.3 V normal, no detection of a voltage error) In a case of normal voltage, see [4–3] Abnormal voltage detection ③. In a case of abnormal voltage detection, see [4-4] Power failure, UCOM Assy.	4.1 OVERALL CONNECTION DIAGRAM 4.3 POWER SUPPLY BLOCK 10.17 WAVEFORMS Abnormal voltage detection ⑳, ㉕
4-3	Power failure ③ Identification of defective Assy	UCOM Assy FAULT_DET CDJB CDCB DJMB JACB HPJK MICB	With all cables other than the cable for CN1004 (USBB to UCOM) disconnected from the UCOM_ASSY, identify the defective Assy by connecting each connector on the UCOM Assy one by one for voltage checks.	Identify the defective ASSY, by connecting each connector on the UCOM Assy, as shown below, one by one for voltage checks: CDJ1B: CN905, CN906 CDJ2B: CN903, CN904 CDCB: CN901, CN902 DJMB: CN1001, 1002 JACB: CN302, CN501 HPJK: CN301 MICB: CN303 Repair the defective part of the defective Assy. If further identification of defective Assys is required, see the notes in “5.3 Voltage Monitoring” before proceeding to further diagnostics.	4.1 OVERALL CONNECTION DIAGRAM 4.3 POWER SUPPLY BLOCK 5.3 VOLTAGE MONITORING
4-4	Power failure ④ UCOM Assy Identification of defective Assy	UCOM Assy FAULT_DET	Deactivate the voltage monitoring circuit then check the section with improper voltage.	The voltage monitoring circuit can be deactivated by removing R147 (0 Ω) on the FAULT_DET. See the notes in “5.3 Voltage Monitoring” before proceeding to further diagnostics. To identify the section with improper voltage, check the voltage at each point on the UCOM Assy.	4.3 POWER SUPPLY BLOCK 5.3 VOLTAGE MONITORING

[1-2] Failure in the microcomputer system

No.	Cause/Symptom	Point to be checked	Item to be checked	How to distinguish a defective point and/or corrective action	Reference
1	Power failure in the MAIN_UCOM	UCOM Assy	Check if a voltage error was detected. Check the power terminal of the MAIN_UCOM (IC701).	If the detected voltage error is confirmed, check conduction between the power supply and GND. Check the power line and the parts, such as coils (beads), resistors, and capacitors. If no problem was found with the parts, power line, and conduction between the power supply and GND, the MAIN_UCOM (IC701) may be defective.	Abnormal Voltage Detection 10.17 WAVEFORMS MAIN UCOM start up
2	MAIN_UCOM Reset circuit error	UCOM Assy	Check the Reset terminal (Pin 17) of the MAIN_UCOM (IC701). (High/Low)	In normal operation, the voltage of the Reset terminal (Pin 17) is high. If the voltage of the Reset terminal is low, check the power line, resistors, capacitors, and the Reset IC (IC106). If the voltage level remains low after the Reset IC (IC106) is replaced, the MAIN_UCOM (IC701) may be defective.	10.17 WAVEFORMS MAIN UCOM start up ⑱
3	MAIN_UCOM X'tal error	UCOM Assy	Check the oscillation waveforms of the X'tal (X701).	Check the waveforms of the X'tal (X701). If an error is found, check the power line, resistors, and capacitors. If the waveform remains abnormal after the X'tal (X701) is replaced, the MAIN_UCOM (IC701) may be defective.	10.17 WAVEFORMS MAIN UCOM start up ⑲
4	MAIN_UCOM startup error	UCOM Assy	After startup, check the lighting statuses of the LEDs. (For example, although some of the LEDs light properly, the unit is not started up properly.)	Refer to “[4] Error Indications” in the 6. Service Mode. If there is no corresponding error indication, reload the program via USB. If the normal status is not recovered after all above steps are performed, the MAIN_UCOM (IC701) may be defective.	6. Service Mode [4] Error Indications

No.	Cause/Symptom	Point to be checked	Item to be checked	How to distinguish a defective point and/or corrective action	Reference
5	Power failure in the USB_UCOM	UCOM Assy	Check if a voltage error was detected. Check the power terminal of the USB_UCOM (IC202).	If the detected voltage error is confirmed, check conduction between the power supply and GND. Check the power line and the parts, such as coils (beads), resistors, and capacitors. If no problem was found with the parts, power line, and conduction between the power supply and GND, the USB_UCOM (IC202) may be defective.	Abnormal Voltage Detection 10.17 WAVEFORMS USB UCOM start up
6	USB_UCOM Reset circuit error	UCOM Assy	Check the Reset terminal (Pin 10) of the USB_UCOM (IC202). (High/Low)	In normal operation, the voltage of the Reset terminal (Pin 10) is high. If the voltage level at the Reset terminal is low, check for abnormal voltage detection, and check the power line, resistors, and capacitors. If no problem was found with the above circuit, parts, and power line, and if the voltage level is low, the USB_UCOM (IC202) or the MAIN_UCOM (IC701) may be defective.	Abnormal Voltage Detection 10.17 WAVEFORMS USB UCOM start up ⑫
7	USB_UCOM X'tal error	UCOM Assy	Check the oscillation waveforms of the X'tal (X201).	If an error is found, check the power line, resistors, and capacitors. If the waveform remains abnormal after the X'tal (X201) is replaced, the USB_UCOM (IC202) may be defective.	10.17 WAVEFORMS USB UCOM start up ⑬
8	USB_UCOM I2C communication error	UCOM Assy	Check the I2C communication waveforms of the EEPROM (IC201) immediately after startup.	Data of the EEPROM (IC201) are loaded only during startup. If an error is generated, check the power supply to the EEPROM, resistors, capacitors, and SW IC (IC203) on the communication line. If no problem is found with the power supply, communication line, and parts, the EEPROM (IC201) or USB_UCOM (IC202) may be defective.	10.17 WAVEFORMS I2C USB UCOM EEPROM
9	EEPROM error	UCOM Assy	Reload the program via USB.	If no problem is found with the communication waveform in [8] above, reload the program via USB. If reloading is successfully performed, the USB_UCOM (IC202) may be defective. If reloading fails, the EEPROM (IC201) may be defective.	8.4 COPYING THE PROGRAM FOR THE USB CONTROLLER

[2] Display (LED indicators)

[2-1] Any one of the LEDs does not light.

No.	Cause/Symptom	Point to be checked	Item to be checked	How to distinguish a defective point and/or corrective action	Reference
1	Defective LED	LERelated point	Check the connections of the LED then check the forward voltage (approx. 2.2 V) between both ends of the LED.	If the forward voltage is abnormal, the LED may be defective.	LED waveform 10.SCHEMATIC DIAGRAM

[2-2] Several LEDs do not light.

No.	Cause/Symptom	Point to be checked	Item to be checked	How to distinguish a defective point and/or corrective action	Reference
1	Signal errors	UCOM Assy CDJ1B CDJ2B DJMB	Check for any loose connections between the MAIN_UCOM (IC701) and the LEDs. Check also that the control signal for the LEDs is output.	If the control signal is not output, check the mounting status of the MAIN_UCOM (IC701). If it is properly mounted, then the IC701 itself may be defective.	Basic Operation Check of the MAIN_UCOM
2	Defective LEDs	Related point	Check the forward voltage (approx. 2.2 V) between both ends of the LEDs.	If the forward voltage is abnormal, the LEDs may be defective.	LED waveform 10.SCHEMATIC DIAGRAM
3	Defective transistors	Related point	Check the transistors.	The transistors may be defective.	10.SCHEMATIC DIAGRAM

[3] Operations (Buttons/VRs/Sliders/NeedleSearch/JOG)

Operation of all buttons, variable controls, and the JOG dial can be confirmed in Service mode.

[3-1] The push buttons are disabled.

No.	Cause/Symptom	Point to be checked	Item to be checked	How to distinguish a defective point and/or corrective action	Reference
1	Loose connection or defective switches	Related point	Check for any loose connections on the signal line from the switch to GRID_IC (IC702), KEY_BUFFER (IC1101, 1102), and main microcomputer (IC701).	If other SWs connected to the same signal line function properly and if the connections are properly made, the SW may be defective.	Each Signal Levels
2	Defective MAIN_UCOM (IC701)	UCOM Assy	If the symptom persists after the above corrections.	Go to [7-1] Basic Operation Check of the Microcomputer.	Basic Operation Check of the MAIN_UCOM

[3-2] Rotary selector not controllable

No.	Cause/Symptom	Point to be checked	Item to be checked	How to distinguish a defective point and/or corrective action	Reference
1	Defective AUTO_LOOP of the CDJ1	CDJ1 Assy	Check that the signal lines (L_ENC1_1/ L_ENC1_2) are normal during rotation of the rotary selector. L_ENC1_1: CN3002-1 pin L_ENC1_2: CN3002-2 pin	If the signals are not normal, check the connections of the signal lines. If the connections are properly made, the rotary selector (S3030) may be defective. Replace it.	Each Signal Levels
2	Defective AUTO_LOOP of the CDJ2	CDJ2 Assy	Check that the signal lines (L_ENC2_1/ L_ENC2_2) are normal during rotation of the rotary selector. L_ENC2_1: CN3502-6 pin L_ENC2_2: CN3502-5 pin	If the signals are not normal, check the connections of the signal lines. If the connections are properly made, the rotary selector (S3527) may be defective. Replace it.	Each Signal Levels
3	Defective DJM BROWSE	DJMB Assy	Check that the signal lines (CUR_ENC1/ CUR_ENC2) are normal during rotation of the rotary selector. CUR_ENC1: CN4002-21 pin CUR_ENC2: CN4002-22 pin	If the signals are not normal, check the connections of the signal lines. If the connections are properly made, the rotary selector (S4027) may be defective. Replace it.	Each Signal Levels
4	Defective MAIN_UCOM (IC701)	UCOM Assy	If the symptom persists after the above corrections.	Check the mounting status of the MAIN_UCOM (IC701). If it is properly mounted, then the IC701 itself may be defective.	Basic Operation Check of the MAIN_UCOM

[3-3] VRs or sliders not controllable

The variable controls on the CDJ1 and CDJ2 Assys or the sliders on the CHFD and CRFD ASSYs are not controllable.

No.	Cause/Symptom	Point to be checked	Item to be checked	How to distinguish a defective point and/or corrective action	Reference
1	Loose connection	CDJ1/CDJ2 Assy CHFD Assy CRFD Assy	Check for any loose connections on the signal line from the MAIN_UCOM (IC701) to each variable control or slider.	If any connection on the signal line is improper, resolder the parts.	—
2	Defective sliders or VRs	CDJ1/CDJ2 Assy CHFD Assy CRFD Assy	VRs: Check the signal level. Tempo slider: Check the levels of the ADCT and ADIN signals. CHFD, CRFD: Check the signal level.	VRs: If the voltage of the signal from a VR (Pin 2) does not change between 3.3 V and 0 V, that VR may be defective. Tempo slider: If the value of the voltage of the ADCT signal (Pin 4) is other than 1.65 V, or if the voltage of the ADIN signal (Pin 2) does not change between 3.3 V and 0 V, the tempo slider may be defective. CHFD, CRFD: If the voltage of the signal from the CHFD or CRFD (Pin 2) does not change between 3.3 V and 0 V, the slider may be defective.	Each Signal Levels
3	Defective MAIN_UCOM (IC701)	UCOM Assy	If the symptom persists after the above corrections.	Check the mounting status of the MAIN_UCOM (IC701). If it is properly mounted, then the IC701 itself may be defective.	Basic Operation Check of the MAIN_UCOM

VRs on the DJMB ASSY not controllable.

4	Loose connection	DJMB Assy	Check for any loose connections on the signal line from each VR to Analog SW_IC (IC4001, IC4002, IC4003) and the main microcomputer (IC701). Signal line: AD_0–4, AD_SW_A, AD_SW_B	If any connection on the signal line is improper, resolder the parts.	—
5	Defective VRs	DJMB Assy	VRs: Check the signal level.	VRs: If the voltage of the signal from a VR (Pin 2) does not change between 3.3 V and 0 V, that VR may be defective.	Each Signal Levels
6	Defective MAIN_UCOM (IC701)	UCOM Assy	If the symptom persists after the above corrections.	Check the mounting statuses of the MAIN_UCOM (IC701) and the Analog SW_IC (IC4001, IC4002, IC4003). If they are properly mounted, then the IC701, IC4001, IC4002, or IC4003 may be defective.	Basic Operation Check of the MAIN_UCOM

[3-4] NeedleSearch error

No.	Cause/Symptom	Point to be checked	Item to be checked	How to distinguish a defective point and/or corrective action	Reference
1	CDC IC Error/ Needlepad disabled (Incl. steps 4 and 5 of [4] Error indications in the 6. Service Mode)	UCOM/CDCB Assy	Check the communication waveform between the needlepad and the MAIN_ UCOM (IC701).	If the waveform is not proper, check the communication line, resistors, and capacitors. Check also that the cables between the boards and their connections are proper. If the normal status is not recovered after all above steps are performed, the CDC IC or the MAIN_UCOM (IC701) may be defective.	10.17 WAVEFORMS CDC IC control 1/2
2	Only some of the commands from the needlepad are recognized.	UCOM/CDCB Assy	Check that no foreign matter is between the Needlepad board and the cabinet.	If the Needlepad operates improperly although there is no foreign matter between the Needlepad board and the cabinet, check [2] above.	

[3-5] Abnormalities regarding the JOG dial

After the JOG Assy is disassembled then reassembled, be sure to check that the load value for the JOG dial is within the specified range. Refer to the "8.5 JOG DIAL ROTATION LOAD ADJUSTMENT".)

Turning of the JOG dial is not detected.

No.	Cause/Symptom	Point to be checked	Item to be checked	How to distinguish a defective point and/or corrective action	Reference
1	Defective JOGB photo interrupter	UCOM Assy CDJ1ssy /CDJ2 Assy LEDB Assy JOGB Assy	Check the waveforms on the JOG1_1, JOG1_2, JOG2_1, and JOG2_2 signal lines. JOG1_1: CN905-2 pin JOG1_2: CN905-3 pin JOG2_1: CN905-24 pin JOG2_2: CN905-23 pin	If any waveform cannot be recognized, connection of that signal line may be loose or the photo interrupter (PC3201) may be defective.	10.17 WAVEFORMS
2	Defective MAIN_UCOM (IC701)	UCOM Assy	If the symptom persists after the above corrections.	Check the mounting status of the MAIN_UCOM (IC701). If it is properly mounted, then the IC701 itself may be defective.	Basic Operation Check of the MAIN_UCOM

Pressing on the JOG dial cannot be detected.

No.	Cause/Symptom	Point to be checked	Item to be checked	How to distinguish a defective point and/or corrective action	Reference
3	Defective TCHB photo interrupter	UCOM Assy CDJ1 Assy /CDJ2 Assy TCHB Assy JOGB Assy	Check the signal level of the JOG_TCH1/2 (Pins 46/47 of IC701) when the JOG dial is pressed.	If the signal level of the JOG_TCH1/2 (Pins 46/47 of IC701) does not become L when the dial is pressed and H when the dial is released (not pressed,) loose connection of the signal line or a defective photo interrupter (IC3301) may be suspected.	Each Signal Levels 10.17 WAVEFORMS JOG rotation operation ⑤⑧
4	Defective MAIN_UCOM (IC701)	UCOM Assy	If the symptom persists after the above corrections.	Check the mounting status of the MAIN_UCOM (IC701) and SW IC (IC702). If they are properly mounted, then the IC701 or IC702 may be defective.	—

Noise is heard when the JOG dial is turned.

No.	Cause/Symptom	Point to be checked	Item to be checked	How to distinguish a defective point and/or corrective action	Reference
5	Defective gear Defective JOG DIAL B	JOG Assy	There may be any scratches on the gear or some foreign matter between the gears.	If there are any scratches, replace the scratched gear with a new one. If there is any foreign matter, remove it then replace the gears with new ones. Gears to be replaced: Load gear, Encoder gear, JOG shaft	—
			There may be any scratches or some foreign matter on the JOG DIAL B or the Roller B Assy.	If there are any scratches, replace the scratched gear with a new one. If any foreign matter is attached, remove it.	—

The JOG dial turns too freely. (The load value for the JOG dial is outside the specified range.)

No.	Cause/Symptom	Point to be checked	Item to be checked	How to distinguish a defective point and/or corrective action	Reference
6	Improper adjustment or assembly of the JOG dial	JOG Assy	Check that the load value for the JOG dial is within the specified range, referring to “Measuring method” in “8.5 JOG Dial Rotation Load Adjustment.”	If it is outside the specified range, adjust the position of the Adjust Plate to change the load value for the JOG dial, referring to “Load adjustment method” in “8.5 JOG Dial Rotation Load Adjustment.”	8.5 JOG Dial Rotation Load Adjustment.
				During the above adjustment, if the upper-limit adjustment position of the Adjust Plate is reached, oil may have been spattered on the Adjust Plate. Replace the washer, load gear, and cam plate with new ones, then reassemble.	8.5 JOG Dial Rotation Load Adjustment.

Resistance to turning the JOG dial is too strong. (The load value for the JOG dial is outside the specified range.

No.	Cause/Symptom	Point to be checked	Item to be checked	How to distinguish a defective point and/or corrective action	Reference
7	Improper adjustment of the JOG dial or defective washer, gear, or cam plate	JOG Assy	Check that the load value for the JOG dial is within the specified range, referring to “Measuring method” in “8.5 JOG Dial Rotation Load Adjustment.”	If it is outside the specified range, adjust the position of the Adjust Plate to change the load value for the JOG dial, referring to “Load adjustment method” in “8.5 JOG Dial Rotation Load Adjustment.”	8.5 JOG Dial Rotation Load Adjustment.
				During the above adjustment, if the lower-limit adjustment position of the Adjust Plate is reached, shavings from the worn-out washer may have increased the friction. Replace the washer, load gear, and cam plate with new ones, then reassemble.	8.5 JOG Dial Rotation Load Adjustment.

A

[4] USB connection

[4-1] The unit cannot be recognized by the PC when connected to the PC via USB connection.

Check the following, with a Windows/MAC PC connected via the USB port of the unit, using the supplied USB cable:

No.	Cause/Symptom	Point to be checked	Item to be checked	How to distinguish a defective point and/or corrective action	Reference
1	Failure in startup	UCOM/USBB Assy	Check the lighting statuses of the LEDs during startup.	If no LED lights, see [1] Failure in Startup.	[1] Failure in Startup
2	Defective USB_UCOM	UCOM/USBB Assy	Check the communication waveforms of the USB DP/DN lines.	If the unit is connected to a PC via the USB cable, communication will be performed through the USB DP/DN lines. If communication cannot be performed, check the USB cable, connectors, internal cables, resistors, capacitors, and filters. If nothing is wrong with them, check the items listed in “Failure in the microcomputer system” and “USB UCOM startup error.”	Failure in the microcomputer system USB_UCOM startup error 10.17 WAVEFORMS USB DP/DN (1),(2) ㉙, ㉚

B

[5] AUDIO OUT

[5-1] No signal is output from the MASTER connectors

No.	Cause/Symptom	Point to be checked	Item to be checked	How to distinguish a defective point and/or corrective action	Reference
1	—	MASTER1/2	Identify the connector(s) that do(es) not output signals.	Check if no signal is output from both MASTER 1 and 2 or either of them. • If neither MASTER 1 nor 2 connector outputs, go to [2]. • If only the MASTER 1 connector does not output, go to [7]. • If only the MASTER 2 connector does not output, go to [8].	—
2	—	UCOM Assy	Check the audio signal, using Pins 5 and 9 of the CN501 on the UCOM Assy.	If no audio signal is output, loose connection or defective parts in the UCOM Assy may be suspected. • If an audio signal is output, go to [7] or [8]. • If an audio signal is not output, go to [3].	10.4 UCOM ASSY (3/6)
3	—	UCOM Assy	Check that an audio signal is output from DAC (IC506).	• If an audio signal is output, go to [5]. • If an audio signal is not output, go to [4].	10.4 UCOM ASSY (3/6)
4	Loose connection /defective parts	UCOM Assy	Check the digital input signals to DAC (IC506). • DAC_RST • MCLK • BCLK • LRCK • MASTER_DATA	If any of the signals is not input, check the soldering status of DAC (IC506). If the level of DAC_RST is L, check the connections of the MAIN_UCOM (IC701). If nothing is wrong with the connec-tions, then the MAIN_UCOM (IC701) itself may be defective. If other signals are not input, check the connections of the USB_UCOM (IC202). If nothing is wrong with the connections, then the USB_UCOM (IC202) itself may be defective.	10.4 UCOM ASSY (3/6) 10.17 WAVEFORMS DAC reset cancel DAC I2S (1),(2)
5	Loose connection /defective parts	UCOM Assy	Check that the MUTE signal level is L (muting canceled).	If the MUTE signal level is L (muting canceled,) check the connections between the DAC and CN501. If nothing is wrong with the connections, soldering of the OP amp (IC501) or the OP amp itself may be defective. If the MUTE signal level is H, go to [6].	10.4 UCOM ASSY (3/6) 10.17 WAVEFORMS Output MUTE cancel ㊹
6	Loose connection /defective parts	UCOM Assy	Check that the A_MUTE signal level is L (muting canceled).	If the A_MUTE signal level is L (muting canceled,) check that the signal logics for Q583/Q505/Q506/ Q581/Q582 are the same as those described in the schematic diagrams. If any of the signal logic is not the same, repair the defective point. If the A_MUTE signal level is not L (muting canceled), the soldering status of the MAIN_UCOM (IC701) or the MAIN_UCOM itself may be defective.	10.4 UCOM ASSY (3/6) 10.17 WAVEFORMS Output MUTE cancel ㊸
7	Loose connection /defective parts	JACB Assy	Identify the point where the audio signal is interrupted on the line from CN4401 to the jacks (JA4402/JA4404).	If the audio signal is interrupted at the periphery of the OP amp (IC4403/IC4405), check the soldering status of the OP amp. If it is properly soldered, then the OP amp itself may be defective.	10.1 JACB ASSY
8	Loose connection /defective parts	JACB Assy	Identify the point where the audio signal is interrupted on the line from CN4401 to the jacks (JA4403).	If the audio signal is interrupted at the periphery of the OP amp (IC4404), check the soldering status of the OP amp. If it is properly soldered, then the OP amp itself may be defective.	10.1 JACB ASSY

C D E F

[5-2] No signal is output from the HP connector

No.	Cause/Symptom	Point to be checked	Item to be checked	How to distinguish a defective point and/or corrective action	Reference
1	—	UCOM Assy	Check the audio signal, using Pins 3 and 5 of the CN301 on the UCOM Assy.	If no audio signal is output, loose connection or defective parts in the UCOM Assy may be suspected. • If an audio signal is output, go to [5]. • If an audio signal is not output, go to [2].	10.3 UCOM ASSY (2/6)
2	—	UCOM Assy	Check that the audio signal is output from DAC (IC304).	• If an audio signal is output, go to [4]. • If an audio signal is not output, go to [3].	10.3 UCOM ASSY (2/6)
3	Loose connection /defective parts	UCOM Assy	Check the digital input signals to DAC (IC304). • DAC_RST (IC304-5 pin) • HP_DATA (IC304-3 pin)	For DAC_RST, check the soldering status of DAC (IC304). If the HP_DATA signal is not input, check the connections of the USB_UCOM (IC202). If nothing is wrong with the connections, then the USB_UCOM (IC202) itself may be defective.	10.3 UCOM ASSY (2/6)
4	Loose connection /defective parts	UCOM Assy	Identify the point where the audio signal is interrupted on the line from DAC (IC304) to the CN301.	If the audio signal is interrupted at the periphery of the OP amp (IC305), soldering of the OP amp or the OP amp itself may be defective.	10.3 UCOM ASSY (2/6)
5	Loose connection /defective parts	HPJK Assy	Identify the point where the audio signal is interrupted on the line from CN4801 to the JA4801.	If the audio signal is interrupted at the periphery of the OP amp (IC4801), soldering of the OP amp or the OP amp itself may be defective.	10.14 HPJK ASSY

[6] AUDIO IN

[6-1] The input signal to AUX/MIC is not output.

No.	Cause/Symptom	Point to be checked	Item to be checked	How to distinguish a defective point and/or corrective action	Reference
0	Prior confirmation of input TRAKTOR setting AC adaptor connection	AUX/MIC	Check that the TRAKTOR input setting is properly made. Check that the AC adaptor is properly connected. (When USB-bus power is used, the signal input to AUX/MIC is not available.)		Operating Instructions
1	—	AUX/MIC	Identify the connector(s) whose input signal(s) is(are) not output.	Check if the signal can be input neither AUX nor MIC or either of them. • If neither of them can receive signals, go to [2]. • If only the AUX connector cannot receive signals, go to [7]. • If only the MIC connector cannot receive signals, go to [8].	10.3 UCOM ASSY (2/6)
2	Loose connection /defective parts	UCOM Assy	Check that the audio signal is input to the ADC (IC303).	• If an audio signal is output, go to [3]. • If an audio signal is not output, go to [5].	10.3 UCOM ASSY (2/6)
3	Loose connection /defective parts	UCOM Assy	Check the digital input signals to ADC (IC303). • ADC_RST (IC303-13 pin) • MIC_AUX_DATA (IC303-1,2 pins)	If the level of ADC_RST is L, check the connections of the MAIN_UCOM (IC701). If nothing is wrong with the connections, then the MAIN_UCOM (IC701) itself may be defective. If the MIC_AUX_DATA signal is not input, check the connections. If nothing is wrong with the connections, then the ADC (IC303) may be defective.	10.3 UCOM ASSY (2/6) 10.17 WAVEFORMS ADC reset cncel ⑥① ADC I2S(1),(2),(3) ⑦③
4	Loose connection /defective parts	UCOM Assy	Check the connections of the USB_UCOM (IC202).	If nothing is wrong with the connections, then soldering of the USB_UCOM (IC202) or the USB_UCOM itself may be defective.	10.2 UCOM ASSY (1/6)
5	Loose connection /defective parts	UCOM Assy	Check that the AIN_MUTE signal level is L (muting canceled).	If it is not L (muting canceled,) check Q509. If the symptom persists, soldering of the MAIN_UCOM (IC701) or the MAIN_UCOM itself is defective.	10.4 UCOM ASSY (3/6) 10.17 WAVEFORMS Input MUTE cancel ⑥⑤
6	Loose connection /defective parts	UCOM Assy	Check the connections between the SW AMP (IC301/IC302) and ADC (IC303) of the MAIN.	If the connections are properly made, soldering of the SW AMP (IC301/IC302) or the SW AMP itself is defective.	10.3 UCOM ASSY (2/6)
7	Loose connection /defective parts	JACB Assy	Check that an audio signal is input to Pins 4 and 6 of the CN4402.	If a signal is input, go to [9]. If a signal is not input, identify the point where the audio signal is interrupted on the line from the AUX terminal (JA4401) to the CN4402. If an audio signal is interrupted at the periphery of the OP amp (IC4401/IC4402), soldering of the OP amp or the OP amp itself may be defective.	10.1 JACB ASSY
8	Loose connection /defective parts	MICB Assy	Check that an audio signal is input to Pin 4 of the CN4601.	If a signal is input, go to [9]. If a signal is not input, identify the point where the audio signal is interrupted on the line from the MIC terminal (JA4601) to the CN4601. If an audio signal is interrupted at the periphery of the OP amp (IC4601), soldering of the OP amp or the OP amp itself may be defective.	10.13 MICB ASSY
9	Loose connection /defective parts	UCOM Assy	Check the connections between CN302 (AUX)/CN303 (MIC) and SW AMP (IC301 /IC302).	If the connection is improperly made, correct it.	10.3 UCOM ASSY (2/6)
10	Loose connection /defective parts	UCOM Assy	Check AUX_MIC_SEL. • When AUX is selected: “H” • When MIC is selected: “L”	If it is not, check Q301. If the symptom persists, soldering of the MAIN_UCOM (IC701) or the MAIN_ UCOM itself is defective.	10.3 UCOM ASSY (2/6) 10.17 WAVEFORMS MIC,AUX No. ⑦⓪

[7] Basic Operation Check of the MAIN_UCOM

Note: First, check if the voltage at each section is OK.

No.	Cause/Symptom	Point to be checked	Item to be checked	How to distinguish a defective point and/or corrective action	Reference
1	GRID Operation Check (No operation with keys, VRs, sliders, or LEDs)	UCOM Assy	Check the power to and the input/output waveforms of the GRID IC (IC702)	If the waveform is not proper, check the GRID line and the parts, such as resistors and capacitors. If the output waveform is not proper, check item [2]. If nothing is wrong with the parts, the GRID IC (IC702) or the MAIN_UCOM (IC701) may be defective.	10.17 WAVEFORMS GRID control 1, GRID control 2
2		UCOM Assy Assy corresponding to each key	Check the output waveform of the GRID IC (IC702), with the FFC cable of the UCOM Assy disconnected.	If the waveform returns to normal, the PCB Assy that is connected with the UCOM Assy via the FFC cable may be defective. If the waveform does not return to normal, the GRID IC (IC702) may be defective.	10.17 WAVEFORMS GRID control 1, GRID control 2
3	KEY Buffer operation (key input disabled)	UCOM Assy	Check the power supply to the KEY Buffer ICs (IC1101 and 1102) and the input/output waveforms when a key is pressed.	If the input waveform appears but the output waveform does not when a corresponding key is pressed, the KEY Buffer ICs (IC1101 and 1102) may be defective. If the input waveform does not appear when a corresponding key is pressed, check item [4].	No operation button is effective. 10.17 WAVEFORMS KEY operation 1,2
4		UCOM Assy Assy corresponding to each key	Check the connection of the FFC cable. Check also the key input circuit of the PCB Assy connected.	If the key input circuit of the board connected is normal, the KEY Buffer ICs (IC1101 and 1102) may be defective.	10.7 UCOM ASSY (6/6)

5.3 VOLTAGE MONITORING

The MAIN_UCOM of this unit always monitors for power failure of the unit and will shut the unit off immediately after an error is detected.

● **Content to be monitored**
Any power failure generated inside the Power block on the UCOM_ASSY, such as voltage drop and voltage rise.
Power to be monitored: V+5_D, V+5_A, V+6, V-6, V+3R3_D, V+3R3_UCOM

● **Microcomputer Detection terminal and its terminal voltage**
TP103 (F-DET, TP terminal) or IC701 (MAIN_UCOM) 23-pin FAULT_DET terminal
Normal: 3.3 V
Abnormal: 0 V

● **Timing of monitoring start**
400 msec after the unit is turned ON

● **Timing upon judgment as a failure**
50 msec after an error is detected

● **LED indication when an error is generated**
All LEDs are unlit after an error is generated.
With other models, the Standby LED flashes to notify of a power failure. However, this does not apply to this model, because a Standby LED is not provided with it.

● **Restoration method**
After the unit shuts itself off because of an error, after completing diagnosis, disconnect the AC adapter and USB cable and wait at least 1 minute before turning the unit back on.

● **Diagnostic procedure**
① Disconnect the AC adapter and USB cable.
② Remove R147 from the UCOM Assy. Note: This step will disable power monitoring.
③ Reconnect the AC adapter and USB cable.
④ As the unit is turned on in a normal way, check each voltage in this state.
Note: Because power will be forcibly supplied even if any voltage is abnormal, if abnormal voltage continues, the defective point may produce heat, which may be dangerous. Therefore, during diagnosis, be sure to disconnect the AC adapter and USB cable several seconds after they are connected so that forcible powering will not continue.
⑤ If the voltage of any power IC is abnormal, the circuit that uses that power or the power IC itself may be defective.
⑥ Repair the defective part then check that the voltage of the repaired part becomes normal.
⑦ Return R147 to its original position on the UCOM Assy.
Note: This step will enable power monitoring.

5.4 HOW TO CHECK OPERATIONS USING THE TRAKTOR SOFTWARE

Operation check of the volume controls, faders, and rotary encoders must be performed with the TRAKTOR software.
The TRAKTOR software is also required for checking the analog audio input/output.
For operation check using the TRAKTOR software, proceed as follows:

[Preparations]

Make preparations, as indicated below, on the PC before performing an operation check of the DDJ-T1.

1. Installation of TRAKTOR PIONEER DDJ-T1 EDITION (for Windows)
2. Installation of the Driver Software (for Windows)
3. Standard use setting of TRAKTOR
4. Import tracks to TRAKTOR.

Use TRAKTOR in Demo mode ("Run Demo").
A PC with the following specifications is required for operation of TRAKTOR:

Supported operating systems		
Mac OS X	10.5	✓
	10.6	✓
Windows® 7 Home Premium/Professional/Ultimate	32-bit version	✓
	64-bit version	✓
Windows Vista® Home Basic/Home Premium/Business/Ultimate (SP1 or later)	32-bit version	✓
	64-bit version	✓
Windows® XP Home Edition/Professional (SP3 or later)	32-bit version	✓

For the latest information on the operating environment and compatibility, and to acquire the latest operating system, please visit the following Native Instruments website:
http://www.native-instruments.com/traktor

Minimum operating environment for TRAKTOR		
CPU	For Mac OS X	Macintosh computer equipped with an Intel® Core™ Duo processor of 1.66 GHz or greater
	For Windows® 7, Windows Vista® and Windows® XP	PC/AT compatible computer equipped with a Pentium® 4 or AMD Athlon 1.4 GHz (SSE1) or greater processor PC/AT compatible computer equipped with a 2 GHz or greater Intel® Pentium® 4 (or compatible) processor
Required memory	1 GB or more of RAM	
Hard disc	Free space of 100 MB or greater	
CD drive	Optical disc drive on which the CD-ROM can be read	
Internet connection	An Internet connection environment is required for user registration with Native Instruments, to update the TRAKTOR software, etc. Use the most recent version of the web browser.	
USB port	A USB port is required to connect the computer with this unit.	

1. Installation of TRAKTOR PIONEER DDJ-T1 EDITION (for Windows)

The compressed installer file for "TRAKTOR PIONEER DDJ-T1 EDITION" will be posted on the Niis Web site:
Folder names: Traktor Installer Win.zip (for Windows) and Traktor Installer Mac.mpkg.zip (for Macintosh)
Download the necessary zip folder from Niis then unzip it.

[Installation Procedures]

Double-click on "Traktor Setup PC.exe" (unzipped file) to display the Setup screen.
Click on [Next] to proceed.
After the Setup screen is started, click on "Next" to proceed.
When the "License Agreement" screen is displayed, check the "I accept . . ." checkbox then click on "Next."
On other screens, basically proceed to the next screen by clicking on "Next" without doing anything.
When installation is finished, click on "Finish."
The three icons are displayed on the desktop.
This completes installation of TRAKTOR PIONEER DDJ-T1 EDITION.

2. Installation of the Driver Software (for Windows)

The driver software for this product is posted on the Pioneer Web site. Download it, as required.
This driver software is an Audio Stream Input Output (ASIO) driver for Windows.
The DDJ-T1 can play audio without this driver installed if you select "PIONEER DDJ-T1(DirectSound)" for "Audio Device" in Audio Setup (mentioned later) for TRAKTOR. However, this driver provides an advantage in audio-data transmission delay (latency time) over the standard Windows audio driver. In addition, when this driver is installed, the DDJ-1 Version Display Utility is installed, as well. With this utility installed, you can confirm the versions of the driver software and DDJ-T1 firmware. (Without this utility installed, the version of the DDJ-T1 firmware cannot be confirmed.) Therefore, be sure to install this driver software.

[Installation Procedures]

Double-click on "Pioneer_DDJ_Driver_XXXXX.exe" (downloaded file).
Select “I agree” then click on “Install.”
After installation is finished, click on “Close.”
This completes driver software installation.

*For details on the installation method, refer to the Operating Instructions.

3. Standard use setting of TRAKTOR

Double-click on the “Traktor” icon on the desktop.

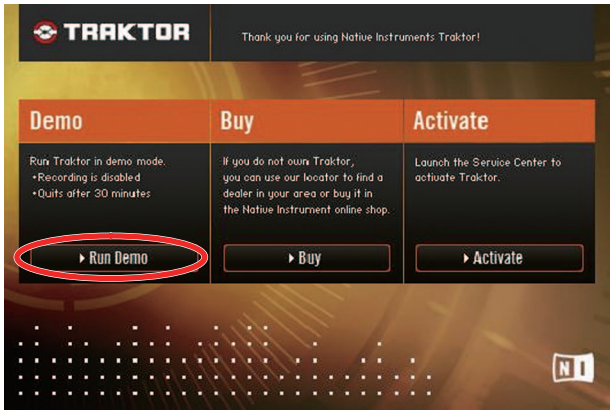

Click on “Run Demo.”

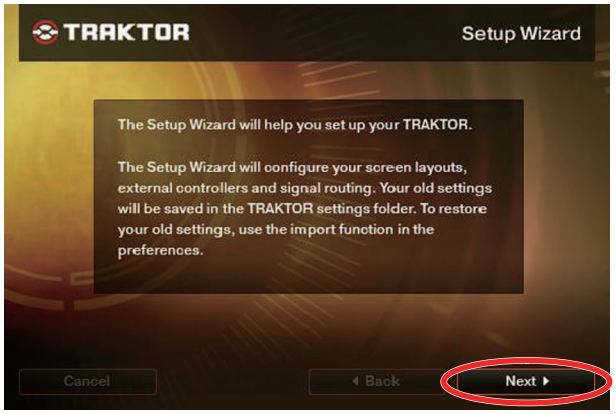

Click on “Next.”

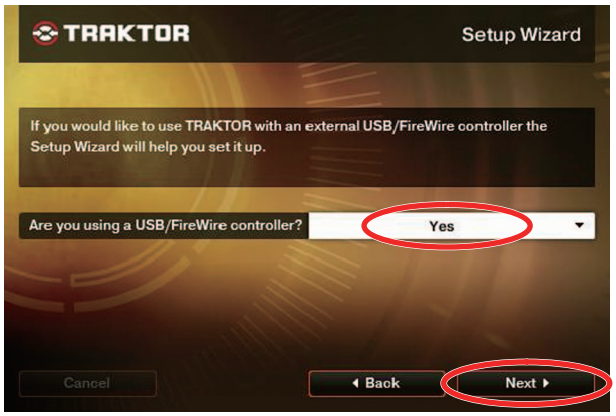

Select “Yes” then click on “Next.”

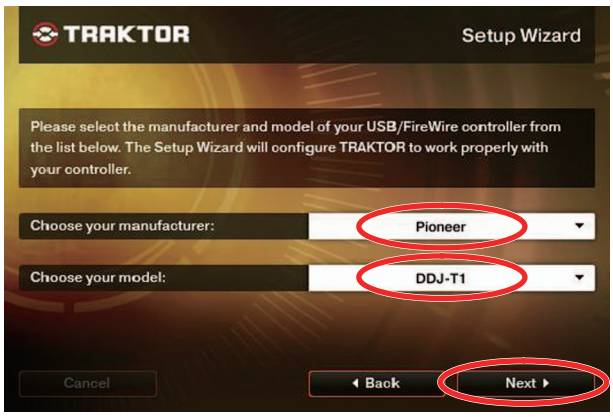

Select “Pioneer” on the pulldown menu for the manufacturer and “DDJ-T1” for the model then click on “Next.”

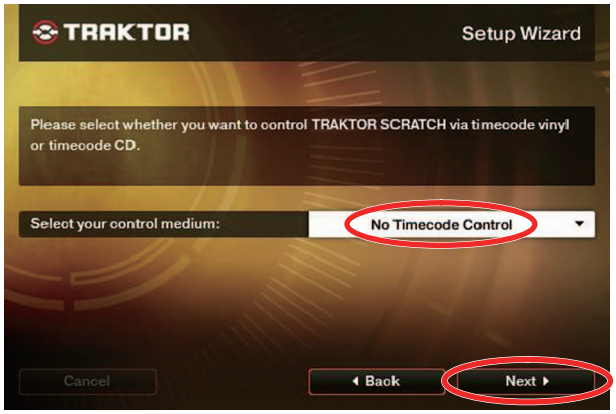

Select “No Timecode Control” then click on “Next.”

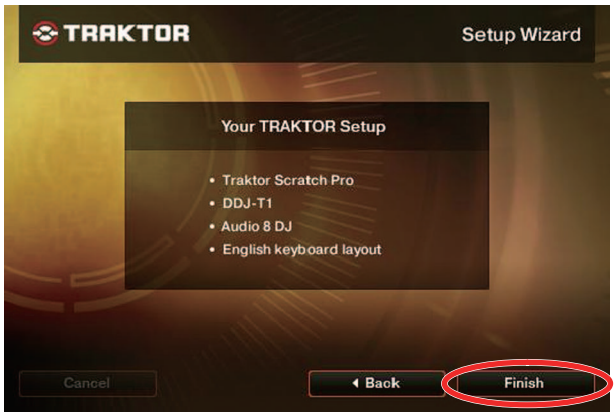

Click on “Finish” to complete operation of the Setup Wizard.

After the TRAKTOR screen is displayed, select “File” then “Preference.”

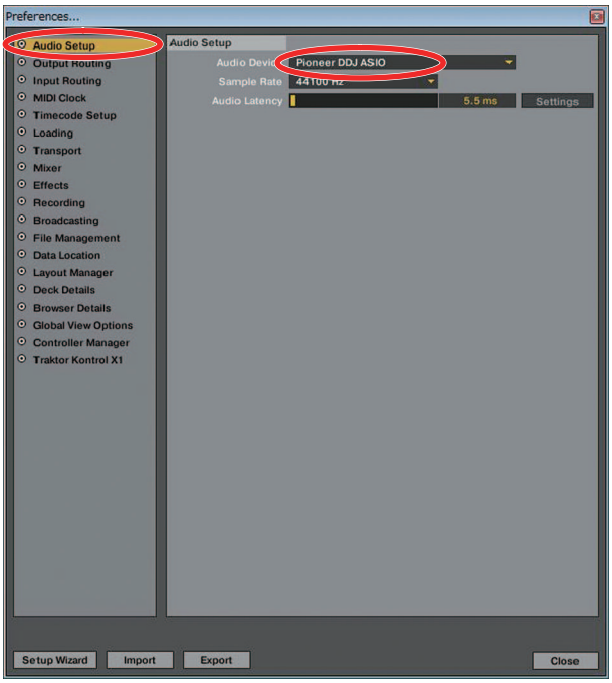

Select “Pioneer DDJ ASIO” in “Audio Setup.”

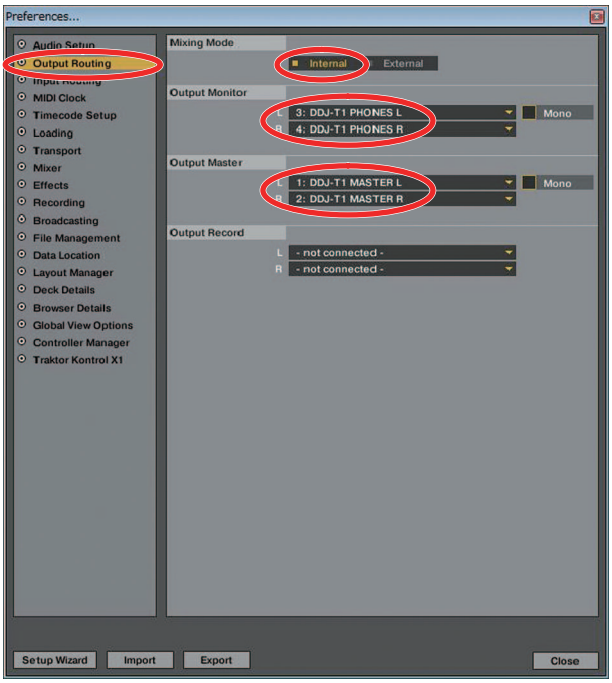

After selecting “Output Routing,” select “Internal” then set the Monitor and Master settings, as shown in the figure above.

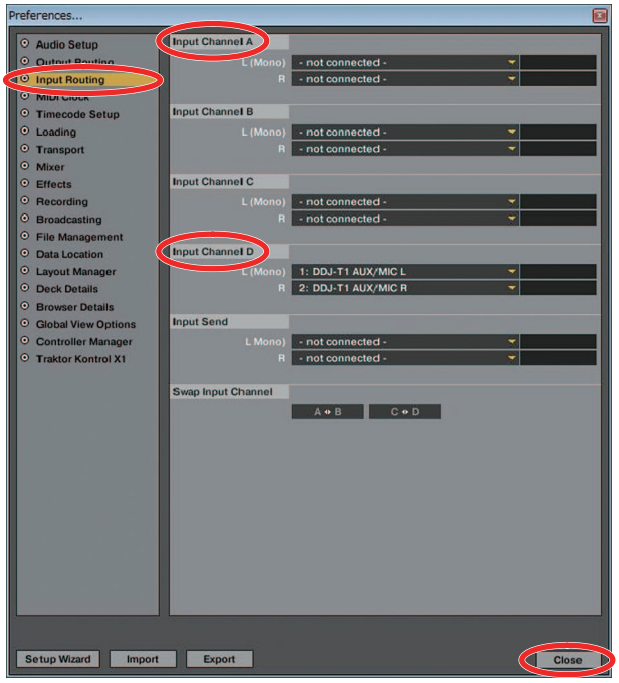

Select Input Routing then set “Input Channel D,” as shown in the figure above. Click on “Close” to exit the Preference menu.

After “4D Int. Mixer” is selected for the deck layout, the screen layout will be changed to that shown in the figure above. The external inputs (AUX/MIC) will be assigned to Deck D.
Click on the triangular symbol beneath D to display the pulldown menu then select “Audio Through.” This enables control of the external inputs on Deck D.

This completes the basic settings.
The settings will be stored and continue to be effective after the next startup.

Notes:

- The usable time for the demo version is limited to 30 minutes. (After activation [license registration] of this software, the usage time limitation will be canceled.)
  If 30 minutes have elapsed with the demo running, terminate the demo version of TRAKTOR. You can restart and use the demo version as many times as you wish.
- On the normal version of TRAKTOR PIONEER DDJ-T1 EDITION, the external inputs (AUX/MIC) are assigned to Deck D, but on the demo version they are assigned to Deck A. This is why “Input Channel D” must be set for the Input Routing setting.

4. Import tracks to TRAKTOR

Drag and drop music files or folders containing music files into “Track Collection” of the “TREE” area of TRAKTOR, using Explorer or Finder.

[Connection Examples]

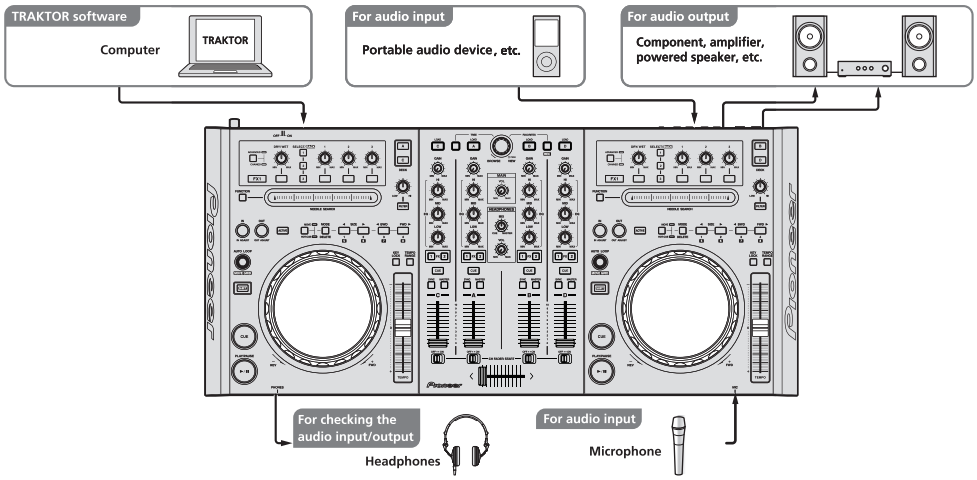

[Checking Track Playback]

1. While holding the TREE button pressed, turn the rotary selector to select a folder.
2. Turn the rotary selector without holding the TREE or FAVORITES button pressed to select a track.
3. Press the LOAD button of the deck into which you wish to load the selected track, to load it.
4. Press the PLAY/PAUSE button to start playback of the track.

[Checking Analog Audio Output]

• Via MASTER OUT

1. Adjust the audio input level, by turning the GAIN control of each deck.
2. Adjust the audio output level with the channel fader of each deck.
3. Select the decks whose audio signals are to be output with the crossfader, as indicated below.
   Leftmost position: Audio from Deck A or C is to be output.
   Center position: Mixed audio of all decks is to be output.
   Rightmost position: Audio from Deck B or D is to be output.
4. Turn the MAIN VOL control. Audio will be output from the MASTER 1 and 2 connectors.

• Via the headphone

1. Connect the headphones to the PHONES connector.
2. Press the headphones CUE button of the deck you wish to monitor.
3. Turn the HEADPHONES MIX control, as indicated below.
   Turning counterclockwise: The volume from the deck whose headphones CUE button is pressed will be relatively increased.
   Center position: The volume from the deck whose headphones CUE button is pressed and that via the MASTER OUT 1 and 2 connectors will become the same.
   Turning clockwise: The volume via the MASTER OUT 1 and 2 connectors will be relatively increased.
4. Turn the HEADPHONES VOL control to output audio from the deck whose headphones CUE button is pressed.

[Checking Analog Audio Input]

1. Connect an external device or a microphone to the AUX IN or MIC connector, respectively.
2. With TRAKTOR, assign the audio of the external device to a desired deck.
3. Click on the ▼ symbol beneath the assigned deck to display the pulldown menu then select "Audio Through."
4. On the TRAKTOR screen and via the audio output, check if the connected audio signal is input.

Note:

With the initial setting of TRAKTOR Pioneer DDJ-T1 EDITION, the audio signal from an external device connected via the AUX IN or MIC connector is input to Deck D.
However, with the initial setting of Demo mode, which is used for servicing, it is assigned to Deck A.

A

[Operation Check of Each Operating Element]

Operation check of the following operating elements cannot be performed in Service mode.
Connect the unit with a PC then check that the TRACTOR software operates properly, using each operating element.

Operating Element	DECK	MIXER	FX
Volume	FILTER CONTROL	GAIN CONTROL A to D EQ HI A to D EQ MID A to D MAIN VOL HEADPHONE MIX HEADPHONE VOL	DRY/WET CONTROL EFFECT 1 to 3 CONTROL
Fader	TEMPO FADER A to D CROSS FADER		
Rotary encoder	AUTO LOOP CONTROL		

B

C

6. SERVICE MODE

6.1 OUTLINE OF SERVICE MODE

The following test modes are prepared for this machine.

D

① Check of operator input and a display function.
It is the mode which checks each input and display function of buttons, JOG dials, encoders, slide switches and needle pads.

② Quality judging of JOG dial load.
It is the mode which judges the quality of the load when rotating JOG dial.

③ Error display.
Error detection and its display method of a device are shown.

④ Firmware update.
Explanation of the method of firmware update.
Refer to the "8.3 UPDATING OF THE FIRMWARE."

E

F

6.2 DETAILS ON SERVICE MODE

[1] Check of operator input and a display function.

When it spends a power supply while pushing a FUNCTION button and a IN (IN ADJUST) button of left deck simultaneously, enters into this mode. (Please continue pushing until an opening display is completed.)

In this mode, the input of each buttons, JOGs, slide switches, needle pads are correct, and it can check that a display can also be performed correctly.
In addition, display of a button is turned on only while pushing the button.

In addition, neither volume nor an encoder can be checked only by the controller.
Please check the display which connects with TRAKTOR and corresponds in the usual mode.

Part	Operator	Device	LED Display
	DECK A		DECK A
	DECK C		DECK C
	DECK B		DECK B
	DECK D		DECK D
FX1/FX2	ADVANCED/CHAINED	BUTTON	ADVANCED→CHAINDE→OFF→ (Cyclic)
	DRY/WET ON/OFF	BUTTON	DRY/WET
	DRY/WET CONTROL	ROTARY VOLUME	*
	SELECT/BACK 1	BUTTON	EFFECT 1
	SELECT/BACK 2	BUTTON	EFFECT 2
	SELECT/BACK 3	BUTTON	EFFECT 3
	EFFECT 1 ON/OFF	BUTTON	EFFECT 1
	EFFECT 2 ON/OFF	BUTTON	EFFECT 2
	EFFECT 3 ON/OFF	BUTTON	EFFECT 3
	EFFECT 1 CONTROL	ROTARY VOLUME	*
	EFFECT 2 CONTROL	ROTARY VOLUME	*
	EFFECT 3 CONTROL	ROTARY VOLUME	*
DECK A/C DECK B/D	FUNCTION	BUTTON	FUNCTION
	NEEDLE SEARCH	PAD	JOG LED ROTATION
	FILTER ON/OFF	BUTTON	FILTER
	FILTER CONTROL	ROTARY VOLUME	*
	IN	BUTTON	IN
	OUT	BUTTON	OUT
	ACTIVE	BUTTON	ACTIVE
	MOVE/CUE	BUTTON	MOVE→CUE→OFF→ (Cyclic)
	MODE/DELETE	BUTTON	MODE/DELETE
	HOT CUE 1/SIZE←	BUTTON	HOT CUE 1/SIZE←
	HOT CUE 2/SIZE→	BUTTON	HOT CUE 2/SIZE→
	HOT CUE 3/BWD	BUTTON	HOT CUE 3/BWD
	HOT CUE 4/FWD	BUTTON	HOT CUE 4/FWD
	AUTO LOOP CONTROL	ENCODER	*
	AUTO LOOP PUSH	ENCODER	IN
	SHIFT	BUTTON	OUT
	KEY LOCK	BUTTON	KEY LOCK
	TEMPO RANGE	BUTTON	FILTER
	CUE	BUTTON	CUE
	PLAY/PAUSE	BUTTON	PLAY/PAUSE
	TEMPO	SLIDE VOLUME	*
	JOG ROTATION	DIAL	JOG LED ROTATION
	JOG TOUCH	DIAL	JOG LED ALL ON
MIXER	LOAD A	BUTTON	FX 1 A
	LOAD B	BUTTON	FX 1 B
	LOAD C	BUTTON	FX 1 C
	LOAD D	BUTTON	FX 1 D
	TREE	BUTTON	HEADPHONE CUE A
	FAVORITES/REC	BUTTON	HEADPHONE CUE B

Part	Operator	Device	LED Display
MIXER	BROWSE CONTROL	ENCODER	JOG LED ROTATION A/B
	BROWSE PUSH	ENCODER	ALL LED BRIGHT→DARK→OFF→ (Cyclic)
	GAIN CONTROL A	ROTARY VOLUME	*
	GAIN CONTROL B	ROTARY VOLUME	*
	GAIN CONTROL C	ROTARY VOLUME	*
	GAIN CONTROL D	ROTARY VOLUME	*
	EQ HI A	ROTARY VOLUME	*
	EQ HI B	ROTARY VOLUME	*
	EQ HI C	ROTARY VOLUME	*
	EQ HI D	ROTARY VOLUME	*
	EQ MID A	ROTARY VOLUME	*
	EQ MID B	ROTARY VOLUME	*
	EQ MID C	ROTARY VOLUME	*
	EQ MID D	ROTARY VOLUME	*
	EQ LOW A	ROTARY VOLUME	*
	EQ LOW B	ROTARY VOLUME	*
	EQ LOW C	ROTARY VOLUME	*
	EQ LOW D	ROTARY VOLUME	*
	MAIN VOL	ROTARY VOLUME	*
	HEADPHONE MIX	ROTARY VOLUME	*
	HEADPHONE VOL	ROTARY VOLUME	*
	FX 1 A	BUTTON	FX 1 A
	FX 1 B	BUTTON	FX 1 B
	FX 1 C	BUTTON	FX 1 C
	FX 1 D	BUTTON	FX 1 D
	FX 2 A	BUTTON	FX 2 A
	FX 2 B	BUTTON	FX 2 B
	FX 2 C	BUTTON	FX 2 C
	FX 2 D	BUTTON	FX 2 D
	HEADPHONE CUE A	BUTTON	HEADPHONE CUE A
	HEADPHONE CUE B	BUTTON	HEADPHONE CUE B
	HEADPHONE CUE C	BUTTON	HEADPHONE CUE C
	HEADPHONE CUE D	BUTTON	HEADPHONE CUE D
	SYNC A	BUTTON	SYNC A
	SYNC B	BUTTON	SYNC B
	SYNC C	BUTTON	SYNC C
	SYNC D	BUTTON	SYNC D
	MASTER A	BUTTON	MASTER A
	MASTER B	BUTTON	MASTER B
	MASTER C	BUTTON	MASTER C
	MASTER D	BUTTON	MASTER D
	FADER A	SLIDE VOLUME	*
	FADER B	SLIDE VOLUME	*
	FADER C	SLIDE VOLUME	*
	FADER D	SLIDE VOLUME	*
	CH FADER START A	SLIDE SWITCH	FX 2 A
	CH FADER START B	SLIDE SWITCH	FX 2 B
	CH FADER START C	SLIDE SWITCH	FX 2 C
	CH FADER START D	SLIDE SWITCH	FX 2 D
	CROSS FADER	SLIDE VOLUME	*

Note: It cannot check only by the controller. Please connect with TRAKTOR, use it and check a related display in the usual mode.

[2] Quality judging of JOG dial load.

When it spends a power supply while pushing a FUNCTION button and a ACTIVE button of left deck simultaneously, enters into this mode. (Please continue pushing until an opening display is completed.)
It is the mode which judges the load (light/heavy) when rotating JOG dial .

It goes into this mode, when JOG dial was turned with sufficient vigor, the following top speed and rotation fall time are measured and top speed becomes more than 7 times, rotation fall time is evaluated, and it judges whether it goes into the range of regular, and a result is displayed on LED.
The rotation direction, right rotation and left rotation, either is OK.

TOP SPEED : Top speed (let the time of turning one rotation in 1.8 second be 1 time speed)
ROTATION FALL TIME : Time taken for rotation to fall to 1.5 times speed from 3 times speed

It is necessary to make it rotate top speed to 7.0 or more times to measure the rotation fall time required.
Not more than 7.0 times faster, it is made to blink 3 times and warns of JOG illuminations.

4 times displays the number of times of measurement on L ED.

The 1st end	HOT CUE 1 (SIZE <-) lighting
The 2nd end	HOT CUE 2 (SIZE ->) lighting
The 3rd end	HOT CUE 3 (BWD <-) lighting
The 4th end	HOT CUE 4 (FWD ->) lighting

After measurement finishes 4 times, an average is taken, and rotation fall time judges whether it goes into the range of regular, and displays a result on LED.
Regulation value is 100 ± 40 [msec].

OK	LOOP ACTIVE lighting
NG (Light)	LOOP OUT lighting
NG (Heavy)	LOOP IN lighting

Measurement is performed although the number of times is not displayed 5th henceforth.
Each time, an average is taken and a result is displayed on LED.

[3] Error display

When abnormalities are detected during the time of carrying out power supply ON, or operation, it displays by LED.

	Abnormalities	LED/Display	Note
1	Abnormalities of a power supply	All LED put out the light.	When abnormalities are detected by the state of DC power supply and USB bus power supply, it will be in this state. Opening display is not performed, either, when abnormalities are detected at the time of starting.
2	Abnormalities in FLASH ROM of MAIN microcom-puter	Left deck/IN (IN ADJUST) Lighting	When update goes wrong and FLASH-ROM is not written correctly, it will be in this state. Even in this case, update can be performed succeedingly. However, "3" is displayed while it can be communicating neither with the case where USB cable is not connected, nor USB controller, correctly also at this time.
3	Aabnormalities of USB controller	Left deck/OUT (OUT ADJUST) Blinks in a cycle of 0.5 seconds.	When the time when it cannot communicate with USB controller correctly although USB cable is connected at the time of starting, and controllers are abnormalities, it will be in this state.
4	Abnormalities of the needle pad controller of the left deck	Right deck/IN (IN ADJUST) Blinks in a cycle of 0.5 seconds.	When the time when it cannot communicate with a needle pad controller correctly, and controllers are abnormalities, it will be in this state. However, this display is performed at the time of "[1] Check of operator input and a display function." It will be used in usual use, with a needle pad not operating.
5	Abnormalities of the needle pad controller of the right deck	Right deck/OUT (OUT ADJUST) Blinks in a cycle of 0.5 seconds.	

[4] Firmware update

Refer to the "8.3 UPDATING OF THE FIRMWARE."

6.3 ABOUT THE DEVICE

Device Name	Function	Part No.	Ref No.	Assy
MAIN UCOM	Main microcomputer, All operating elements/LED control	DYW1801 PEG850A8-K	IC701	UCOM Assy
USB UCOM	USB control, audio control	TUSB3200A	IC202	UCOM Assy
CDC	Needle search control	AD7147ACPZ500RL7	IC2001 IC2101	CDCB 1 Assy CDCB 2 Assy

7. DISASSEMBLY

Note: Even if the unit shown in the photos and illustrations in this manual may differ from your product, the procedures described here are common.

Knobs and Volumes Location

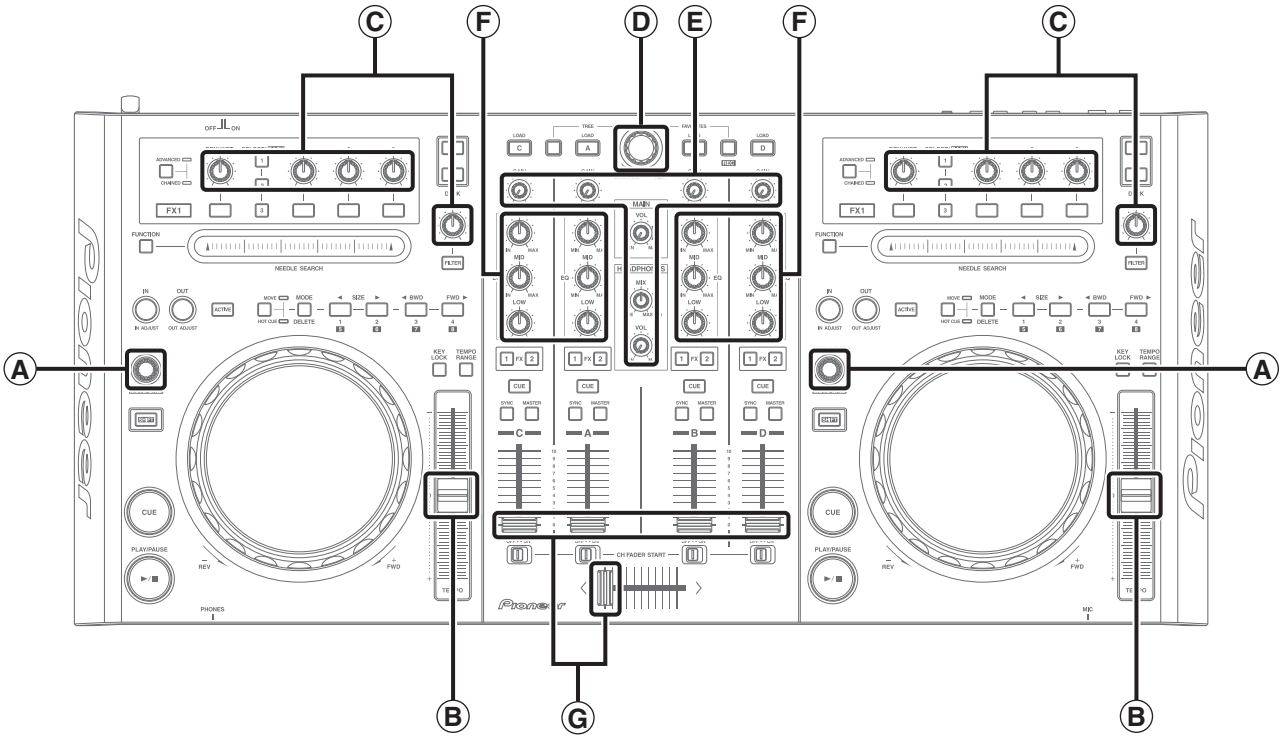

Ⓐ Dial Knob S (DAA1264) ×2

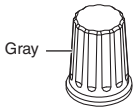

Ⓑ Slide Knob (Metal) (DNK5876) ×2

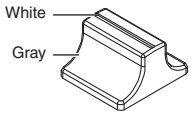

Ⓒ Rotary Knob L (Gray) (DAA1267) ×10

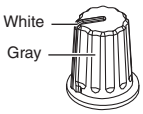

Ⓓ Dial Knob (DAA1259) ×1

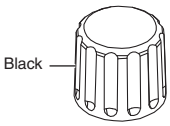

Ⓔ Rotary Knob S (Black) (DAA1262) ×7

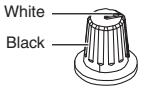

Ⓕ Rotary Knob L (Black) (DAA1261) ×12

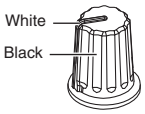

Ⓖ Slider Knob 1 (DAC2684) ×5 + Slider Knob 2 (DAC2685) ×5 + Slider Knob Stopper (DNK5888) ×5

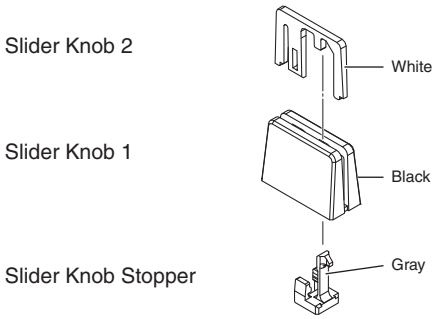

Disassembly

[1] Chassis Section

[1-1] Volumes and knobs

(1) Remove the two dial knobs S.
(2) Remove the 10 rotary knobs L (Gray).
(3) Remove the 12 rotary knobs L (Black).
(4) Remove the one dial knob.
(5) Remove the seven rotary knobs S (Black).
(6) Remove the two slide knobs (Metal).
(7) Remove the five silider knobs 2,
five slider knobs 1, five slider knob stoppers.
(See below.)

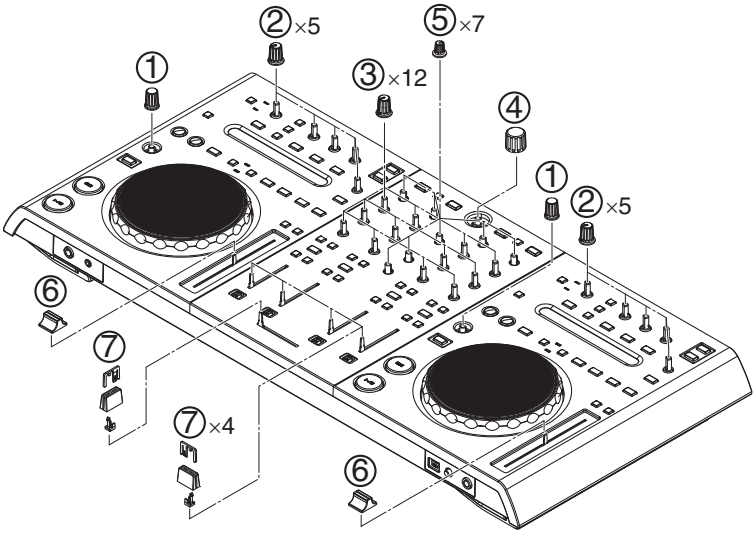

The reference of the direction

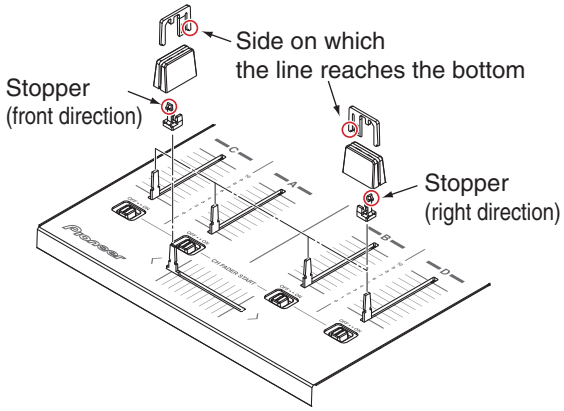

• Disassembly of the slider knob

The new slider knob adopted by this product is designed so that it is not pulled out easily.
Therefore, the method for removing the slider knob is different from the conventional method; it can only be pulled out after slider knob 2 is removed.

① Find the side on which the line reaches the bottom.

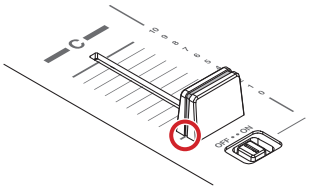

② Insert a pair of tweezers etc. beneath the line then push the slider knob 2 upward. To protect the panel from being scratched, use protective material.

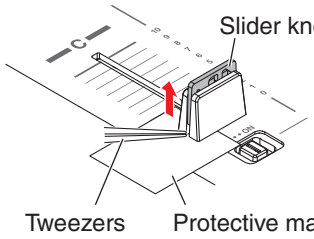

③ Remove the slider knob 2.

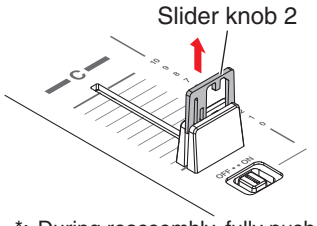

*: During reassembly, fully push down Slider knob 2 until it is dented into Slider knob 1.

④ Remove the slider knob 1.

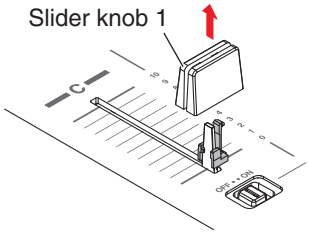

⑤ Remove the slider knob stopper.

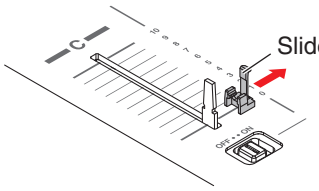

[1-2] Chassis section

(1) Reverse the product.
(2) Remove the four screws. (PMB30P080FTB)
(3) Remove the two foots.

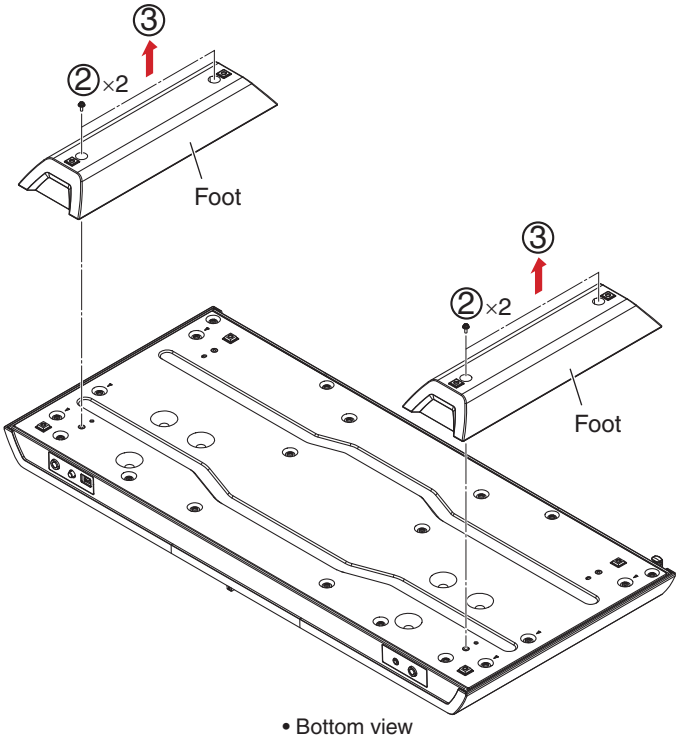

(4) Remove the six screws. (BPZ30P080FNI)
(5) Remove the 14 screws. (BBZ30P060FTC)
(6) Remove the chassis A.

Screw tightening order

The other screws are random order.

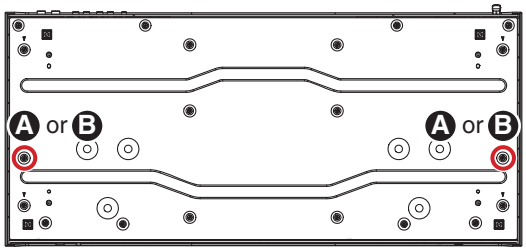

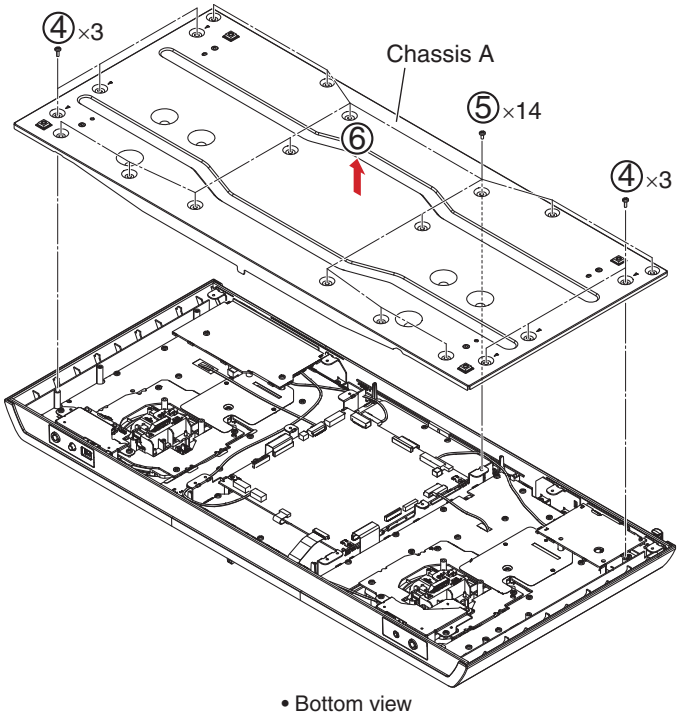

[2] Mixer and Fader Section

[2-1] UCOM Assy

(1) Release the clamper.
(2) Disconnect the seven flexible cables and eight connectors. (CN4403, CN301 - CN303, CN501, CN901 - CN906, CN1001 - CN1004)
(3) Remove the four screws. (BBZ30P060FTC)
(4) Remove the UCOM Assy.

Screw tightening order

The other screws are random order.

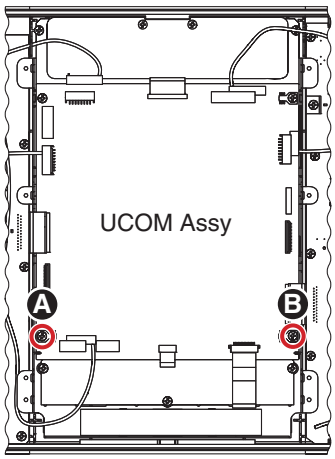

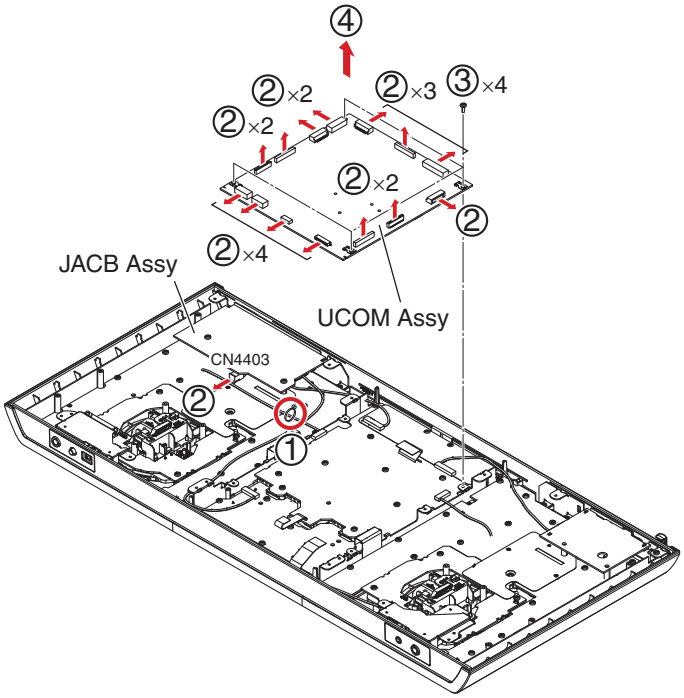

• Bottom view

[2-2] Mixer and fader section

(1) Remove the two screws. (BPZ30P080FNI)
(2) Remove the FFC guard M.
(3) Remove the 20 screws. (BPZ30P080FNI)
(4) Remove the three cord clampers.
(5) Remove the mixer and fader section.

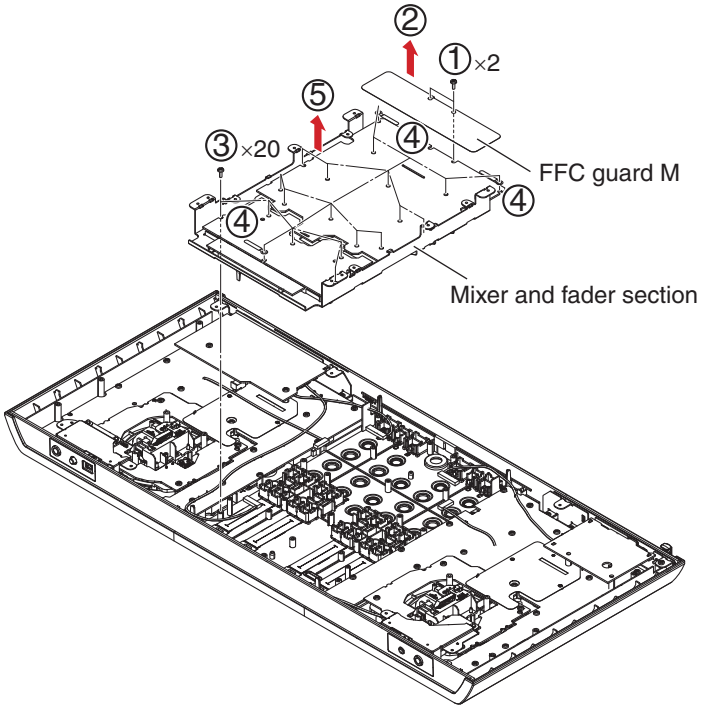

• Bottom view

[2-3] CRFD, CHFD and DJMB Assemblies

(1) Remove the four Caps/FDR.
(2) Remove the 19 nut and 19 washers.
(3) Remove the eight screws. (PMH20P040FTC)
(4) Remove the two screws. (IMZ30P040FTC)
(5) Remove the VR stay L.

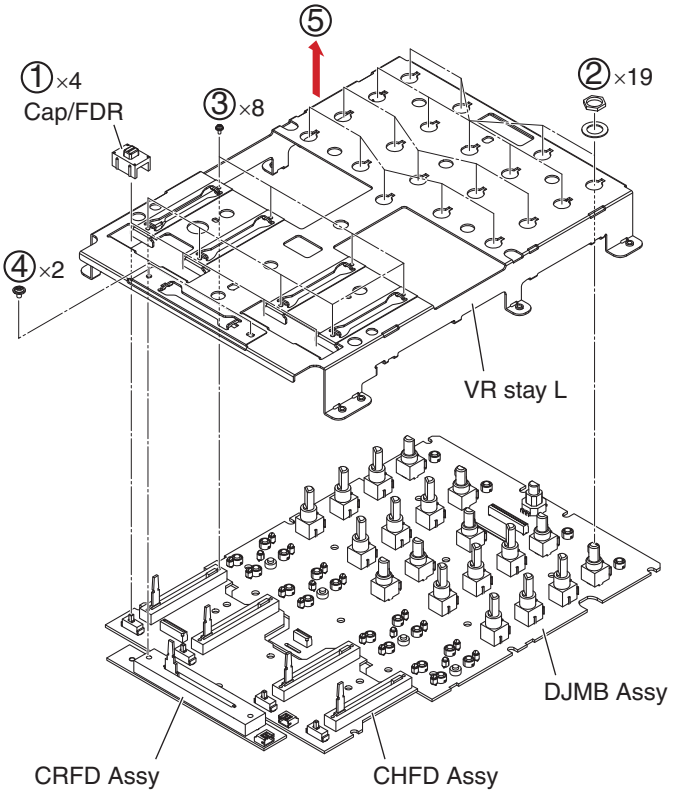

Clamper styling

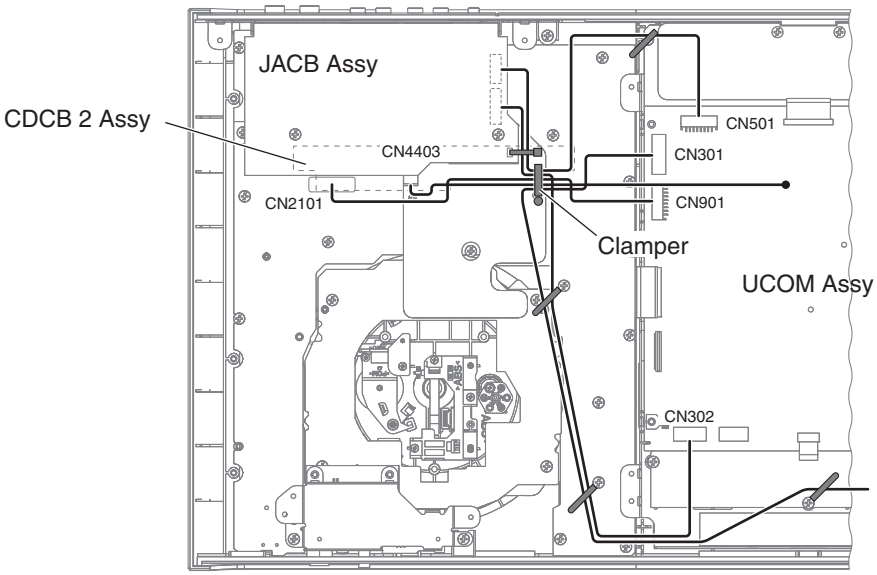

[3] Deck Section

[3-1] MICB, HPJK, USBB and JACB Assemblies

Release the jumper wires, as required.

• MICB Assy

(1) Remove the two screws. (BPZ30P080FNI)
(2) Remove the MICB Assy.
(3) Remove the slide SW packing (B).

• HPJK Assy

(4) Remove the two screws. (BPZ30P080FNI)
(5) Remove the HPJK Assy.

• USBB Assy

(6) Remove the one screw and remove the cord hook. (BBZ30P060FTB)
(7) Remove the one screw. (BBZ30P060FTB)
(8) Remove the one screw. (DBA1340)
(9) Remove the two screws. (BPZ30P080FNI)
(10) Remove the USBB Assy.

• JACB Assy

(11) Remove the two nuts. (NKX2FTC)
(12) Remove the phone spacer.
(13) Remove the one screw. (BBZ30P060FTB)
(14) Remove the two screws. (BPZ30P080FTB)
(15) Remove the two screws. (BPZ30P080FNI)
(16) Remove the JACB Assy.

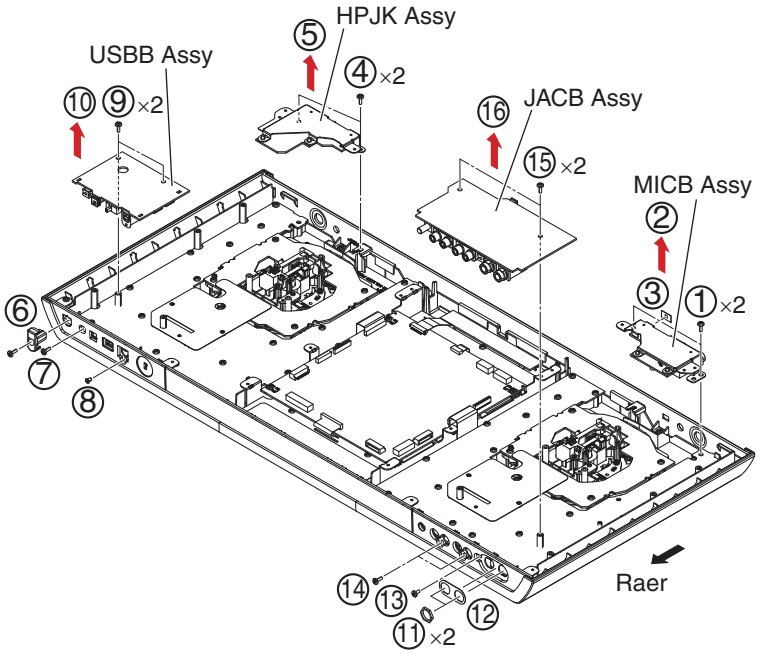

• Bottom view

Screw tightening order

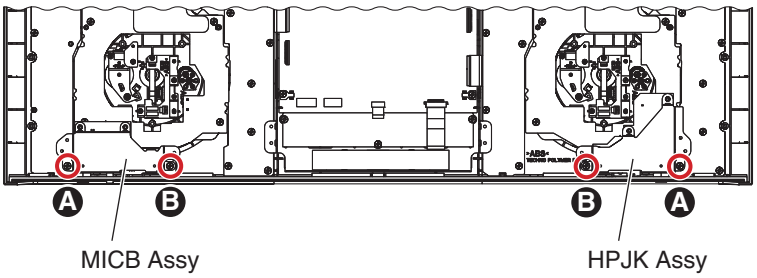

[3-2] CDJ1B and CDJ2B Assy

• CDJ1B Assy

(1) Disconnect the three flexible cables and one connector.
(CN902, CN905, CN906, CN6001)
(2) Remove the three screws. (BPZ30P080FNI)
(3) Remove the FFC guard 1.
(4) Remove the 24 screws. (BPZ30P080FNI)
(5) Remove the CDJ1B Assy.

• CDJ2B Assy

(6) Disconnect the three flexible cables and one connector.
(CN901, CN903, CN904, CN6001)
(7) Remove the three screws. (BPZ30P080FNI)
(8) Remove the FFC guard 1.
(9) Remove the 24 screws. (BPZ30P080FNI)
(10) Remove the two cord clampers.
(11) Remove the CDJ2B Assy.

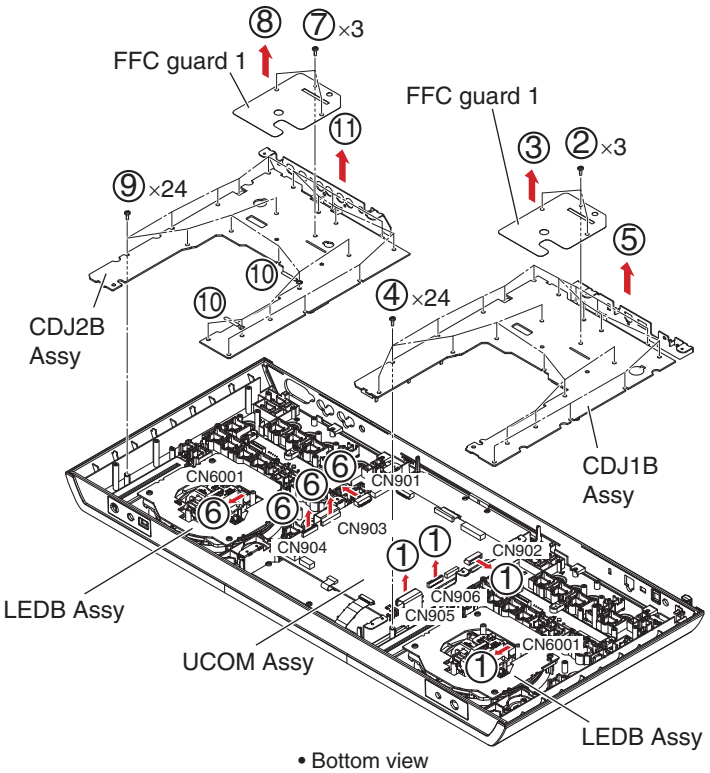

• Bottom view

Screw tightening order
The other screws are random order.

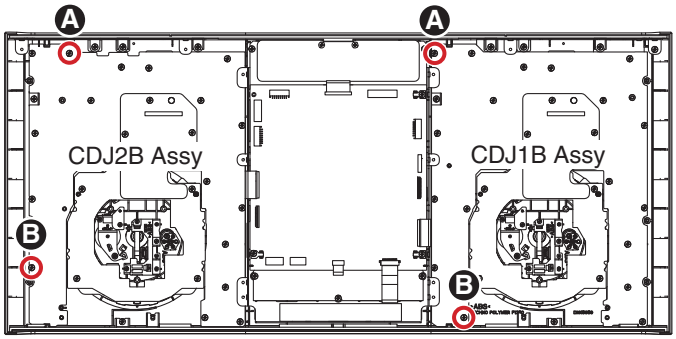

• Stay

(1) Remove the five nuts and five washers.
(2) Remove the two VR stays S.
(3) Remove the rear stay L and R.

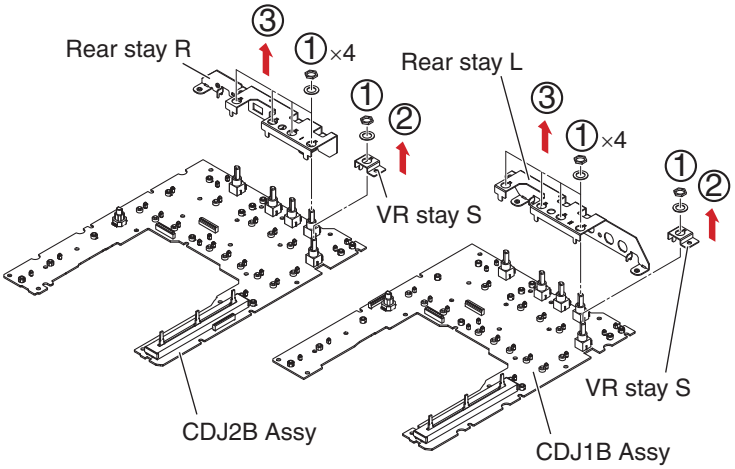

[3-3] CDCB 1, CDCB 2 Assy and JOG section

• CDCB 1 Assy

(1) Remove the three screws and remove the three CDC stoppers. (BPZ30P080FNI)
(2) Remove the CDCB 1 Assy.

• CDCB 2 Assy

(3) Remove the three screws and remove the three CDC stoppers. (BPZ30P080FNI)
(4) Remove the CDCB 2 Assy.

• JOG section

(5) Remove the eight screws. (BPZ30P100FTB)
(6) Remove the two JOG sections.

Note:
Either the CDCB 1 Assy or CDCB 2 Assy is assembled here. The CDCB 1 Assy and CDCB 2 Assy are interchangeably used and handled similarly in their production management.

Screw tightening order
The other screws are random order.

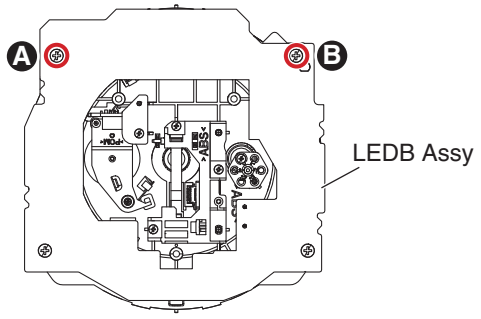

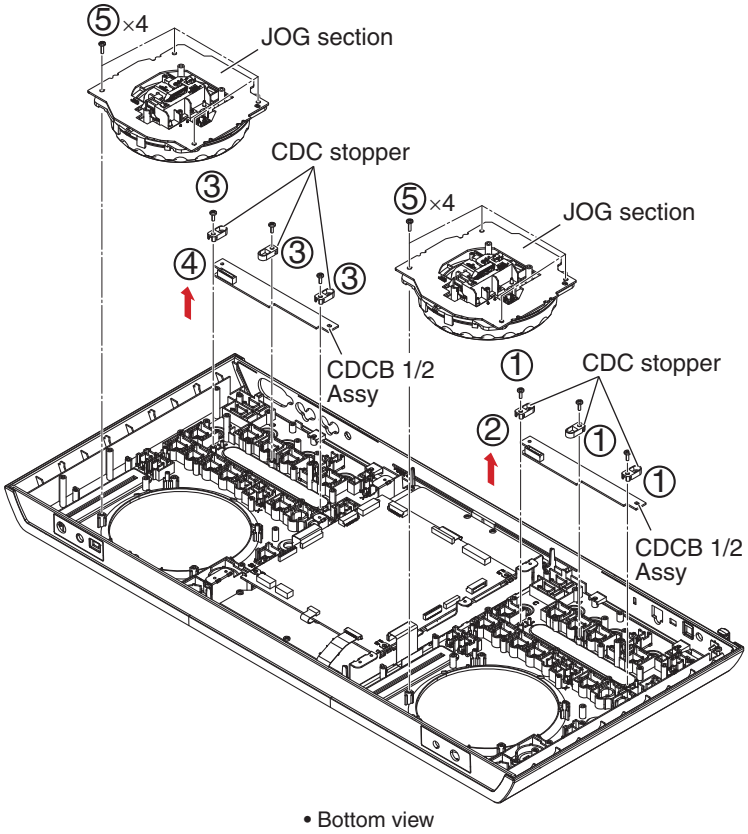

[3-4] LEDB Assy

(1) Disconnect the one connector. (CN6002)
(2) Disconnect the one connector. (CN3301)
(3) Remove the LEDB Assy.

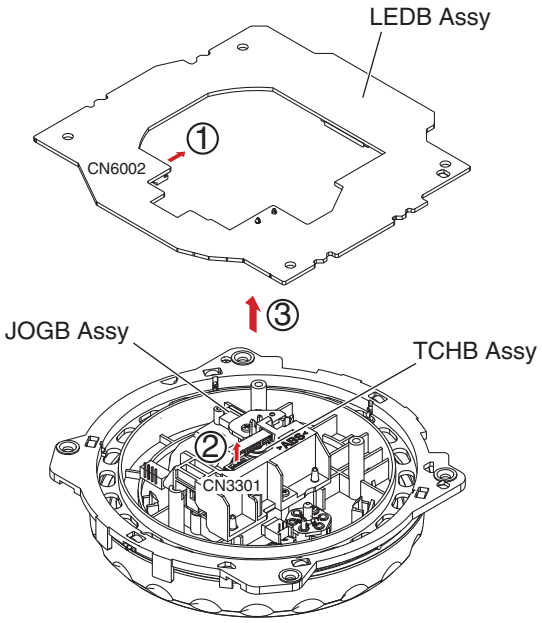

8. EACH SETTING AND ADJUSTMENT

8.1 NECESSARY ITEMS TO BE NOTED

Before repairing, be sure to check the version of the firmware, and if it is not the latest one, update to the latest version.
Perform the each item when the following parts are replaced.

- UCOM ASSY (MAIN UCOM: IC701) ⟹ • Confirmation of the version of the firmware • Updating to the latest version of the firmware
- EEPROM on the UCOM ASSY: IC201 ⟹ • Copying the program for the USB controller • Updating to the latest version of the firmware
- Component parts of the JOG dial section ⟹ • JOG dial rotation load adjustment

8.2 CONFIRMATION OF THE VERSIONS OF THE FIRMWARE

Confirmation of the firmware version can be performed on a PC connected with this product.
How to confirm differs depending on the type of OS used.

1. Confirmation of the Versions of the DDJ-T1 Firmware (for Windows)

To confirm the versions of the driver software and DDJ-T1 firmware, with the DDJ-T1 connected with a PC, click on “Start” then select “All Programs,” “Pioneer,” “DDJ,” then “DDJ Version Display Utility.”

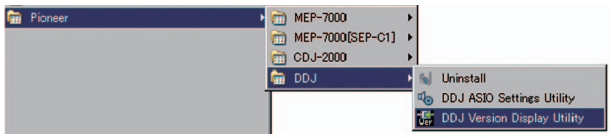

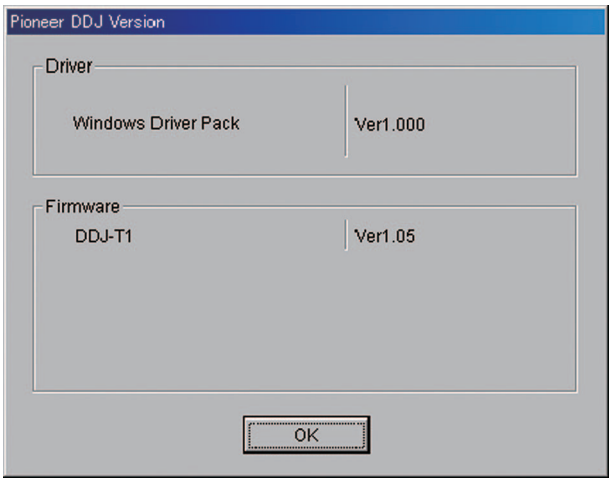

2. Confirmation of the Version of the DDJ-T1 Firmware (for Macintosh)

As the standard audio driver for the Macintosh OS is to be used, neither driver software nor a version display utility for Macintosh are provided.
For confirmation of the version of the DDJ-T1 firmware, proceed as follows:

How to Confirm the Version of the DDJ-T1 Firmware on Mac OS X

1. Select “Application” then “Utility,” then start “System Profiler.”

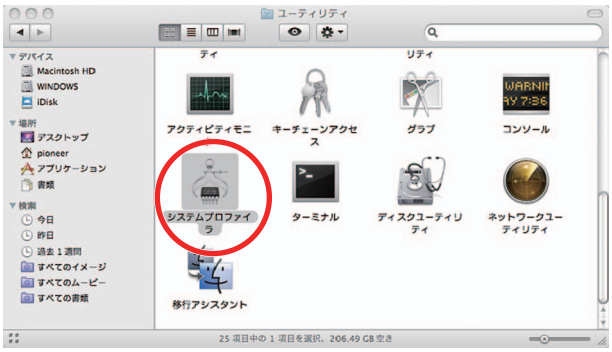

2. Click on “USB” then “DDJ-T1.” The version of the DDJ-T1 firmware is displayed in the version field.

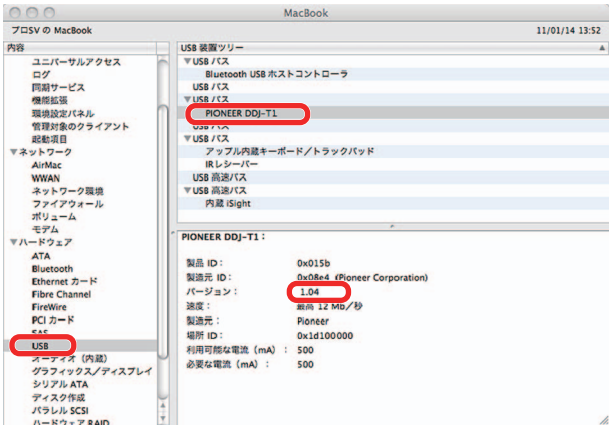

8.3 UPDATING OF THE FIRMWARE

A The devices which update a firmware are MAIN microcomputer and USB controller.
USB connection of the controller is made at PC/MAC, and it updates by performing the update program of exclusive use.

File name

Windows	DDJT1_xxx.exe	Note: xxx is version number. If it is Ver1.00, it is DDJT1_100.exe/DDJT1_100.dmg.
Mac	DDJT1_xxx.dmg	Note: In the case of Mac, since an icon will appear if dmg file is double-clicked, it is performed.

CAUTION: When you update, please terminate all DJ applications, such as TRAKTOR.

Example (Windows)

B

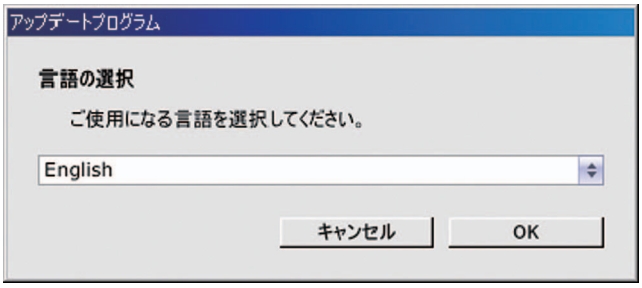

Starting/Selection of a language
(English is chosen.)

C

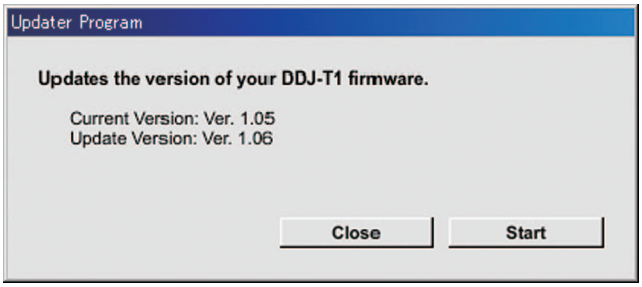

Check of a version

D

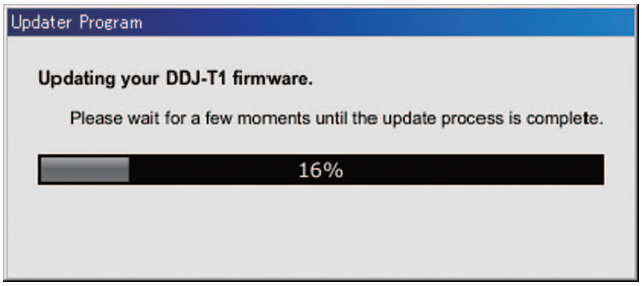

Progress display

E

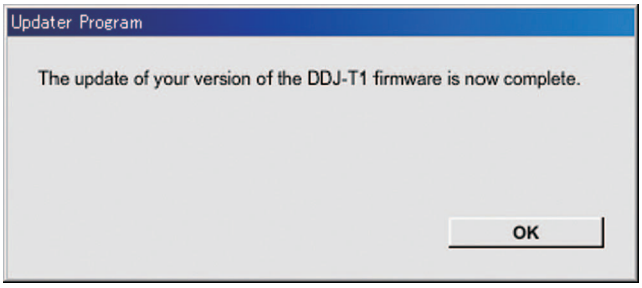

End.
Controller is re-started automatically.

Recovery when failing

F When update goes wrong, USB cable is extracted on the way or the power supply has been turned off, usual DJ operation becomes impossible after that.
In this case, the recovery mode which only updates operates (State of 2 or 3 in "[3] Error display").
Update program can be used like usual also at this time.

8.4 COPYING THE PROGRAM FOR THE USB CONTROLLER

Copy the program for the USB controller according to the following procedure after the EEPROM (IC201) on the UCOM Assy is replaced:

① Turn the DDJ-T1 off then connect this unit with a PC, via USB.
② Set the POWER switch to ON while simultaneously holding the FUNCTION and LOOP OUT buttons on the left deck pressed.
③ Copying of the program is successfully completed if the ADVANCED LED on the left deck lights then goes dark in about 3 seconds. (The ADVANCED LED flashes if nothing is connected to the USB port of this unit or copying failed for some reason.)

After copying is completed, turn the unit off then back on again.

8.5 JOG DIAL ROTATION LOAD ADJUSTMENT

1. How to Enter JOG Load Measurement Mode

Set the POWER switch to ON while holding the FUNCTION and ACTIVE buttons on the left panel pressed.
=> JOG Load Measurement mode is entered when the KEY LOCK LEDs on the left and right panels light.

2. Measurement Method

Rotate the JOG dial clockwise swiftly.*
*If the rotation speed is high enough (successful measurement)
When the 1st measurement is finished, HOT CUE 1 (SIZE ←) lights.
When the 2nd measurement is finished, HOT CUE 2 (SIZE →) lights.
When the 3rd measurement is finished, HOT CUE 3 (BWD ←) lights.
When the 4th measurement is finished, HOT CUE 4 (FWD →) lights.
If the rotation speed is not high enough (measurement fails)
The JOG dial flashes 3 times, after which it goes dark.

Perform measurements four times, each time after confirming that the previous measurement was successfully finished, which is shown as mentioned above.

3. Judgment

After four measurements are successfully finished, the level of the measured JOG load value with regard to the reference value will be displayed.
Reference value: 100 ±40 (msec)
OK: LOOP ACTIVE lit
NG (measured value is smaller than the reference value): LOOP OUT lit
NG (measured value is larger than the reference value): LOOP IN lit

4. Adjustment When the JOG Load Value is Outside the Specified Range

When LOOP OUT is lit:
Because the load value is too small, detach and shift the Adjust Plate toward the + direction then secure it.
When LOOP IN is lit:
Because the load value is too large, detach and shift the Adjust Plate toward the – direction then secure it.

After adjustment of the Adjust Plate location, repeat Steps 1 to 3 until the measurement result becomes OK.

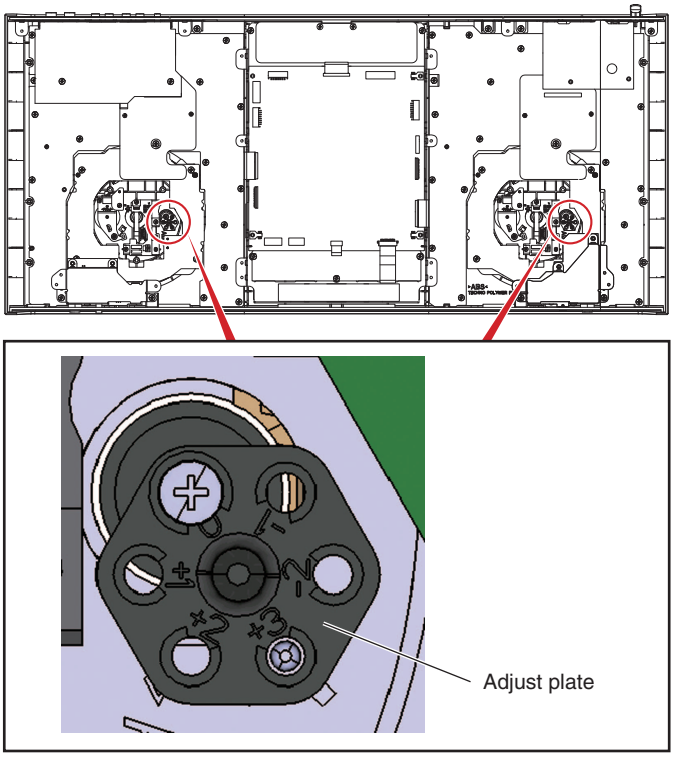

Fig. 1

A

B

C

D

E

F

9. EXPLODED VIEWS AND PARTS LIST

NOTES: ● *Parts marked by "NSP" are generally unavailable because they are not in our Master Spare Parts List.*
● *The ⚠ mark found on some component parts indicates the importance of the safety factor of the part. Therefore, when replacing, be sure to use parts of identical designation.*
● *Screws adjacent to ▼ mark on product are used for disassembly.*
● *For the applying amount of lubricants or glue, follow the instructions in this manual. (In the case of no amount instructions, apply as you think it appropriate.)*

9.1 PACKING SECTION

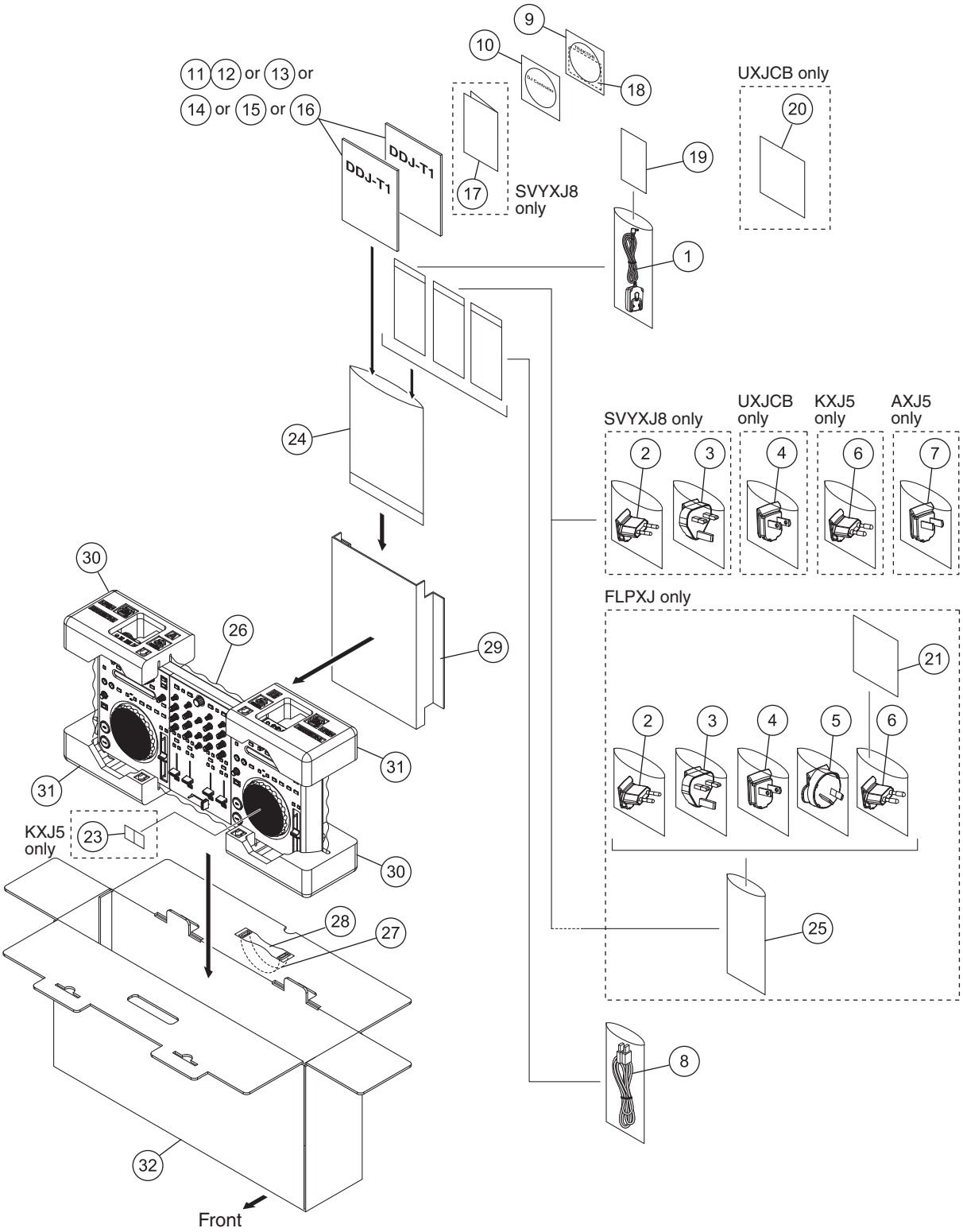

(1) PACKING SECTION PARTS LIST

Mark	No.	Description	Part No.
⚠	1	AC Adapter	DWR1491
⚠	2	Power Plug (EU)	See Contrast table (2)
⚠	3	Power Plug (UK)	See Contrast table (2)
⚠	4	Power Plug (US)	See Contrast table (2)
⚠	5	Power Plug (AUS)	See Contrast table (2)
⚠	6	Power Plug (KOR)	See Contrast table (2)
⚠	7	Power Plug (CHI)	See Contrast table (2)
	8	USB Cable	DDE1140
	9	TRAKTOR Pioneer DDJ-T1 EDITION software CD-ROM	DXX2665
	10	Driver software CD-ROM	DXX2666
	11	Operating Instructions	See Contrast table (2)
	12	Operating Instructions	See Contrast table (2)
	13	Operating Instructions	See Contrast table (2)
	14	Operating Instructions	See Contrast table (2)
	15	Operating Instructions	See Contrast table (2)
	16	Operating Instructions	See Contrast table (2)
NSP	17	Warranty Card	See Contrast table (2)
NSP	18	License Key Label AS	DXA2242
	19	Caution Card/ADP	DRM1345
	20	Caution Card/CU	See Contrast table (2)
	21	Caution Card/PLG	See Contrast table (2)
	22	• • • • •	
	23	Recycle Label (M)	See Contrast table (2)
NSP	24	Polyethylene Bag	AHG7117
	25	Vinyl Bag	See Contrast table (2)
	26	Packing Sheet	RHC1023
	27	Plastic Handle (PE)	VEC2292
	28	Spacer (PE)	VEC2293
	29	Accessory Pad	DHA1875
	30	Pad A	DHA1871
	31	Pad B	DHA1872
	32	Packing Case	See Contrast table (2)

(2) CONTRAST TABLE

DDJ-T1/SVYXJ8, UXJCB, FLPXJ, KXJ5 and AXJ5 are constructed the same except for the following:

Mark	No.	Symbol and Description	DDJ-T1/SVYXJ8	DDJ-T1/UXJCB	DDJ-T1/FLPXJ	DDJ-T1/KXJ5	DDJ-T1/AXJ5
⚠	2	Power Plug (EU)	DKX1048	Not used	DKX1048	Not used	Not used
⚠	3	Power Plug (UK)	DKX1049	Not used	DKX1049	Not used	Not used
⚠	4	Power Plug (US)	Not used	DKX1047	DKX1047	Not used	Not used
⚠	5	Power Plug (AUS)	Not used	Not used	DKX1050	Not used	Not used
⚠	6	Power Plug (KOR)	Not used	Not used	DKX1051	DKX1051	Not used
⚠	7	Power Plug (CHI)	Not used	Not used	Not used	Not used	DKX1052
	11	Operating Instructions (En/Fr/De)	DRB1537	Not used	Not used	Not used	Not used
	12	Operating Instructions (It/Nl/Es/Ru)	DRB1563	Not used	Not used	Not used	Not used
	13	Operating Instructions (En)	Not used	DRB1536	Not used	Not used	Not used
	14	Operating Instructions (En/Es/Zhtw)	Not used	Not used	DRB1539	Not used	Not used
	15	Operating Instructions (Ko)	Not used	Not used	Not used	DRB1541	Not used
	16	Operating Instructions (Zhcn/En)	Not used	Not used	Not used	Not used	DRB1540
NSP	17	Warranty Card	ARY7107	Not used	Not used	Not used	Not used
	20	Caution Card/CU	Not used	DRM1353	Not used	Not used	Not used
	21	Caution Card/PLG	Not used	Not used	DRM1346	Not used	Not used
	23	Recycle Label (M)	Not used	Not used	Not used	DRW2307	Not used
	25	Vinyl Bag	Not used	Not used	Z21-013	Not used	Not used
	32	Packing Case	DHG3055	DHG3056	DHG3057	DHG2987	DHG2985

9.2 EXTERIOR SECION

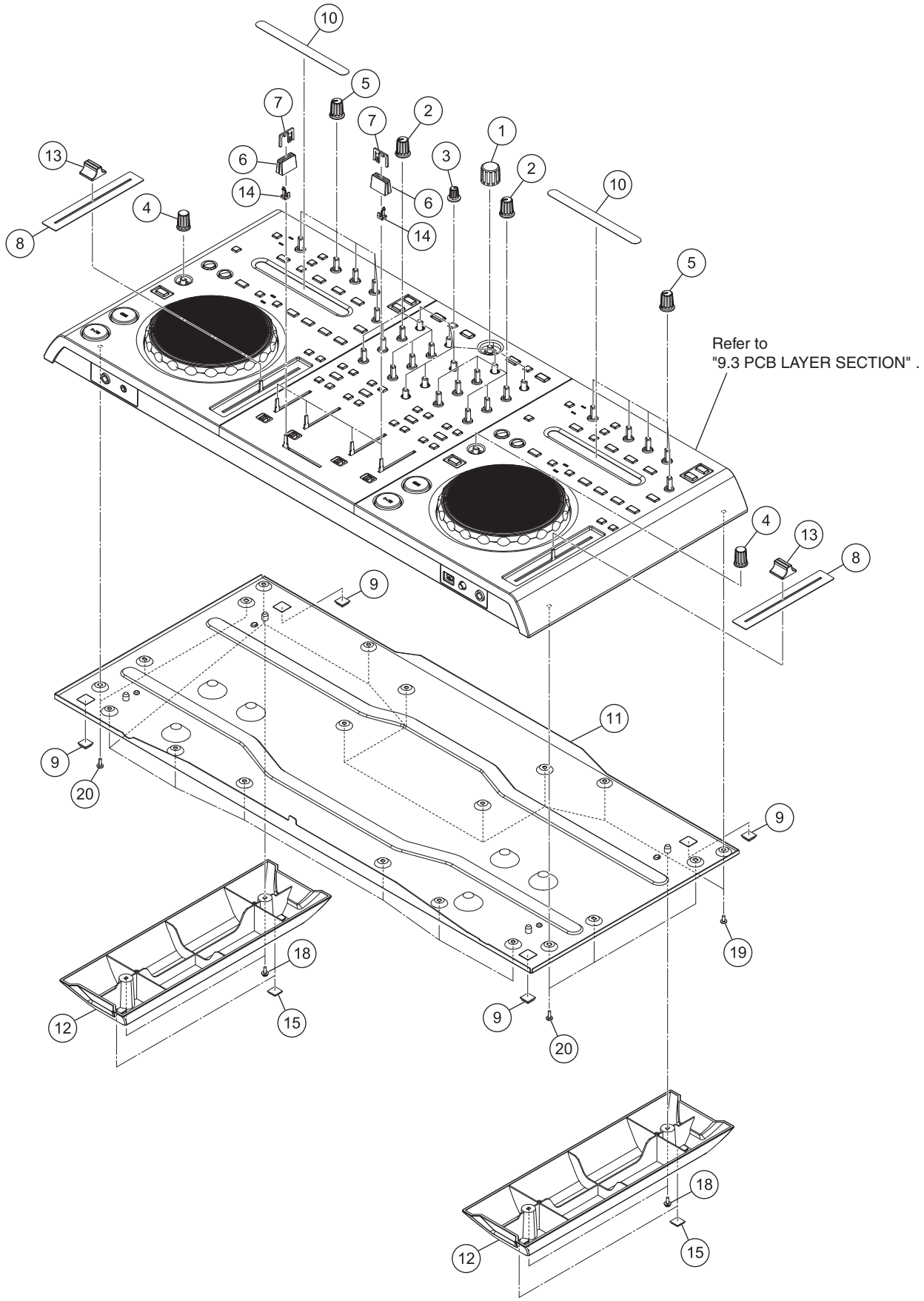

(1) EXTERIOR SECION SECTION PARTS LIST

Mark	No.	Description	Part No.
	1	Dial Knob	DAA1259
	2	Rotary Knob L (Black)	DAA1261
	3	Rotary Knob S (Black)	DAA1262
	4	Dial Knob S	DAA1264
	5	Rotary Knob L (Gray)	DAA1267
	6	Slider Knob 1	DAC2684
	7	Slider Knob 2	DAC2685
	8	Slide Sheet	DAH2836
	9	Rubber Foot (H6)	DEB1996
	10	CDC Sheet	DEC3354
	11	Chassis	See Contrast table (2)
	12	Foot	DNK5864
	13	Slide Knob (Metal)	DNK5876
	14	Slider Knob Stopper	DNK5888
	15	Rubber Foot	VEB1349
	16	•••••	
	17	•••••	
	18	Screw	PMB30P080FTB
	19	Screw	BBZ30P060FTC
	20	Screw	BPZ30P080FNI

(2) CONTRAST TABLE

DDJ-T1/SVYXJ8, UXJCB, FLPXJ, KXJ5 and AXJ5 are constructed the same except for the following:

Mark	No.	Symbol and Description	DDJ-T1/SVYXJ8	DDJ-T1/UXJCB	DDJ-T1/FLPXJ	DDJ-T1/KXJ5	DDJ-T1/AXJ5
	11	Chassis	DNA1419	DNA1414	DNA1415	DNA1416	DNA1416

9.3 PCB LAYER SECION

• Bottom view

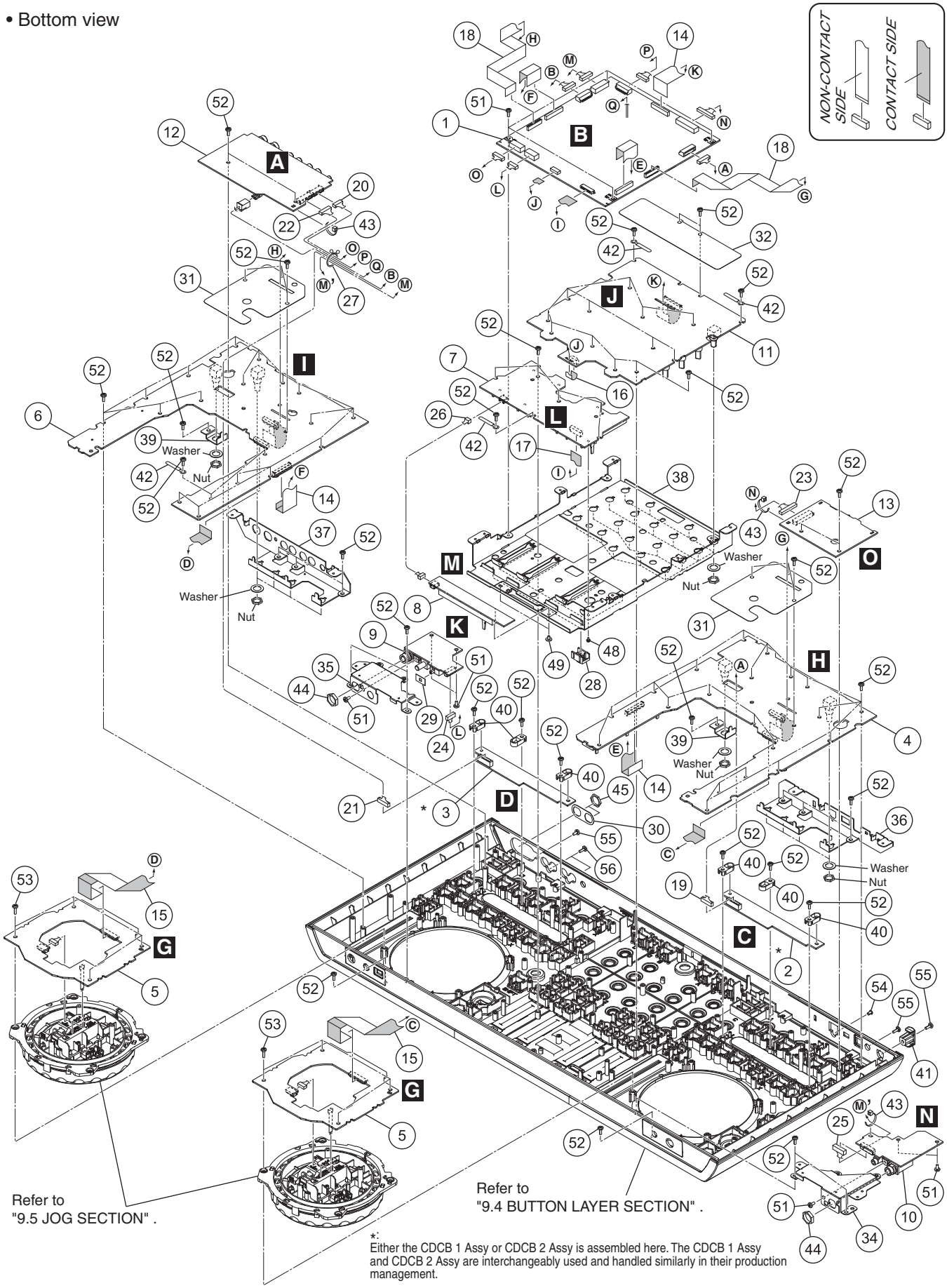

*:
Either the CDCB 1 Assy or CDCB 2 Assy is assembled here. The CDCB 1 Assy and CDCB 2 Assy are interchangeably used and handled similarly in their production management.

PCB LAYER SECTION PARTS LIST

Mark No.	Description	Part No.
1	UCOM Assy	DWX3209
2	CDCB 1 Assy	DWX3210
3	CDCB 2 Assy	DWX3224
4	CDJ1B Assy	DWS1430
5	LEDB Assy	DWS1434
6	CDJ2B Assy	DWS1431
7	CHFD Assy	DWX3212
8	CRFD Assy	DWX3213
9	MICB Assy	DWX3215
10	HPJK Assy	DWX3216
11	DJMB Assy	DWX3211
12	JACB Assy	DWX3214
13	USBB Assy	DWX3222
14	25P FFC	DDD1543
15	19P FFC	DDD1545
16	8P FFC	DDD1547
17	15P FFC	DDD1548
18	FFC/20P	DDD1561
19	Crimp Connector	DKP3894
20	Crimp Connector	DKP3897
21	Crimp Connector	DKP3900
22	Crimp Connector	DKP3920
23	Crimp Connector	DKP3921
24	Crimp Connector	DKP3922
25	Crimp Connector	DKP3923
26	Connector Assy	PF03PP-C06
27	Clamper	CNV3477
28	Cap/FDR	DAC2771
29	Slide SW Packing (B)	DEC2590
30	Phone Spacer	DEC2914
31	FFC Guard 1	DEC3362
32	FFC Guard M	DEC3364
33	•••••	
34	Front Stay L	DNH2959
35	Front Stay R	DNH2960
36	Rear Stay L	DNH2961
37	Rear Stay R	DNH2962
38	VR Stay L	DNH2963
39	VR Stay S	DNH2964
40	CDC Stopper	DNK5863
41	Cord Hook	DNK5928
42	Cord Clamper (Steel)	RNH-184
43	Binder	ZCA-SKB90BK
44	Nut M12	DBN1018
45	Nut	NKX2FTC
46	•••••	
47	•••••	
48	Screw	PMH20P040FTC
49	Screw	IMZ30P040FTC
50	•••••	
51	Screw	BBZ30P060FTC
52	Screw	BPZ30P080FNI
53	Screw	BPZ30P100FTB
54	Screw (M3x5)	DBA1340
55	Screw	BBZ30P060FTB
56	Screw	BPZ30P080FTB

9.4 BUTTON LAYER SECION

• Bottom view

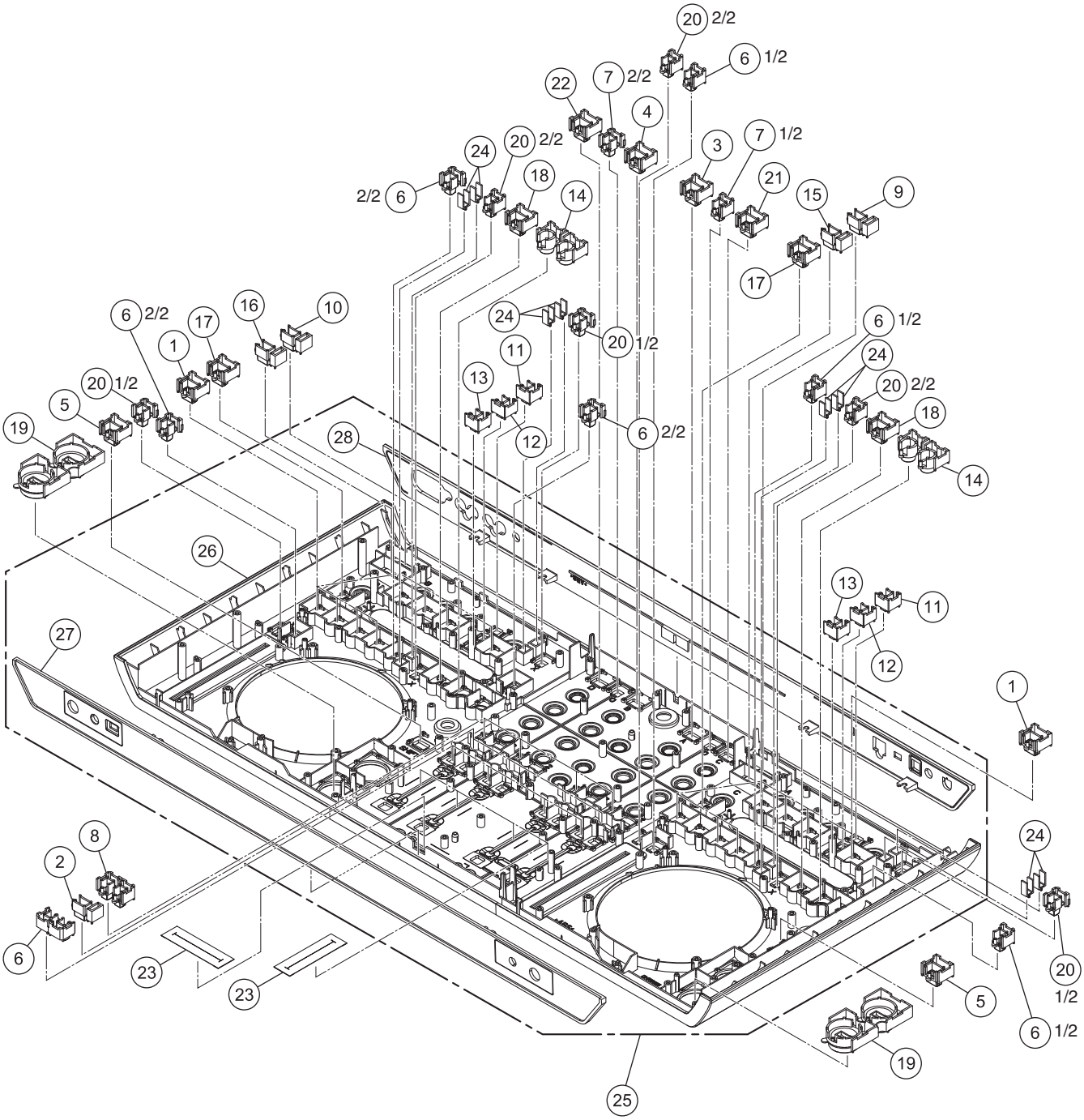

(1) BUTTON LAYER SECTION PARTS LIST

Mark	No.	Description	Part No.
	1	Button L (Opal)	DAC2657
	2	Cue Button R	DAC2658
	3	Load Button A	DAC2659
	4	Load Button B	DAC2660
	5	Shift Button	DAC2661
	6	Button S (Opal)	DAC2662 *
	7	Button S (Black)	DAC2663 *
	8	FX Assign Button	DAC2664
	9	Deck Select Button A	DAC2665
	10	Deck Select Button B	DAC2666
	11	FX Select Button 1	DAC2667
	12	FX Select Button 2	DAC2668
	13	FX Select Button 3	DAC2669
	14	Loop Button	DAC2671
	15	Deck Select Button C	DAC2677
	16	Deck Select Button D	DAC2678
	17	Filter Button	DAC2680
	18	Active Button	DAC2681
	19	Play Button	DAC2682
	20	Button S (Gray)	DAC2683 *
	21	Load Button C	DAC2687
	22	Load Button D	DAC2688
	23	Fader Packing	DEC3355
	24	Lens	DNK5862
	25	1..Control PNL Assy	See Contrast table (2)
	26	2..Control Panel	DNK5859
	27	2..Front Panel	DNK5869
	28	2..Rear Panel	See Contrast table (2)

*: Note that there are two types of button S, as some of them have to be split into two when used.

(2) CONTRAST TABLE

DDJ-T1/SVYXJ8, UXJCB, FLPXJ, KXJ5 and AXJ5 are constructed the same except for the following:

Mark	No.	Symbol and Description	DDJ-T1/SVYXJ8	DDJ-T1/UXJCB	DDJ-T1/FLPXJ	DDJ-T1/KXJ5	DDJ-T1/AXJ5
	25	Control PNL Assy	DXB2096	DXB2106	DXB2107	DXB2110	DXB2108
	28	Rear Panel	DNK5870	DNK5878	DNK5879	DNK5882	DNK5880

9.5 JOG SECTION

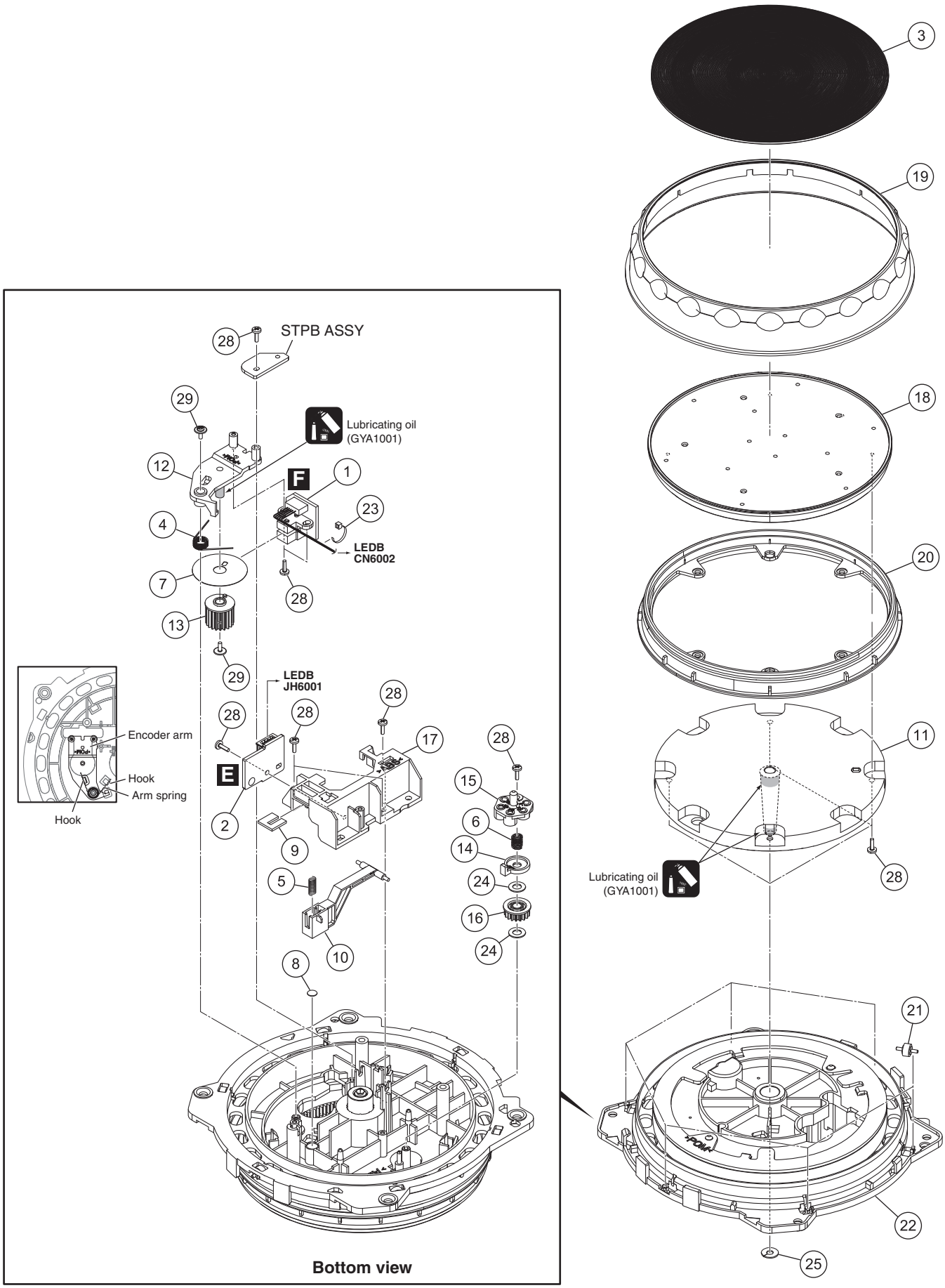

JOG SECTION PARTS LIST

Mark No.	Description	Part No.
1	JOGB Assy	DWS1432
2	TCHB Assy	DWS1433
3	JOG Plate	DAH2837
4	Arm Spring	DBH1612
5	Lever Spring	DBH1626
6	Load Spring	DBH1676
7	Encorder Plate	DEC2889
8	Lever Cushion (A)	DEC3001
9	Lever Cushion (B)	DEC3002
10	JOG Lever	DNK4763
11	JOG Shaft	DNK4934
12	Encorder Arm	DNK4936
13	Encorder Gear	DNK4937
14	Load Smoother	DNK4939
15	Adjust Plate	DNK4943
16	Load Gear	DNK5178
17	Lever Holder	DNK5206
18	JOG Dial A	DNK5860
19	JOG Dial B	DNK5861
20	Ring Lens	DNK5945
21	Roller B Assy	DXB1877
22	JOG Holder Assy	DXB2002
23	Binder	ZCA-SKB90BK
24	Washer	WA41D070D025
25	Washer	WT32D080D050
26	• • • • •	
27	• • • • •	
28	Screw	BPZ20P060FTC
29	Screw (FE)	DBA1265

10. SCHEMATIC DIAGRAM
10.1 JACB ASSY

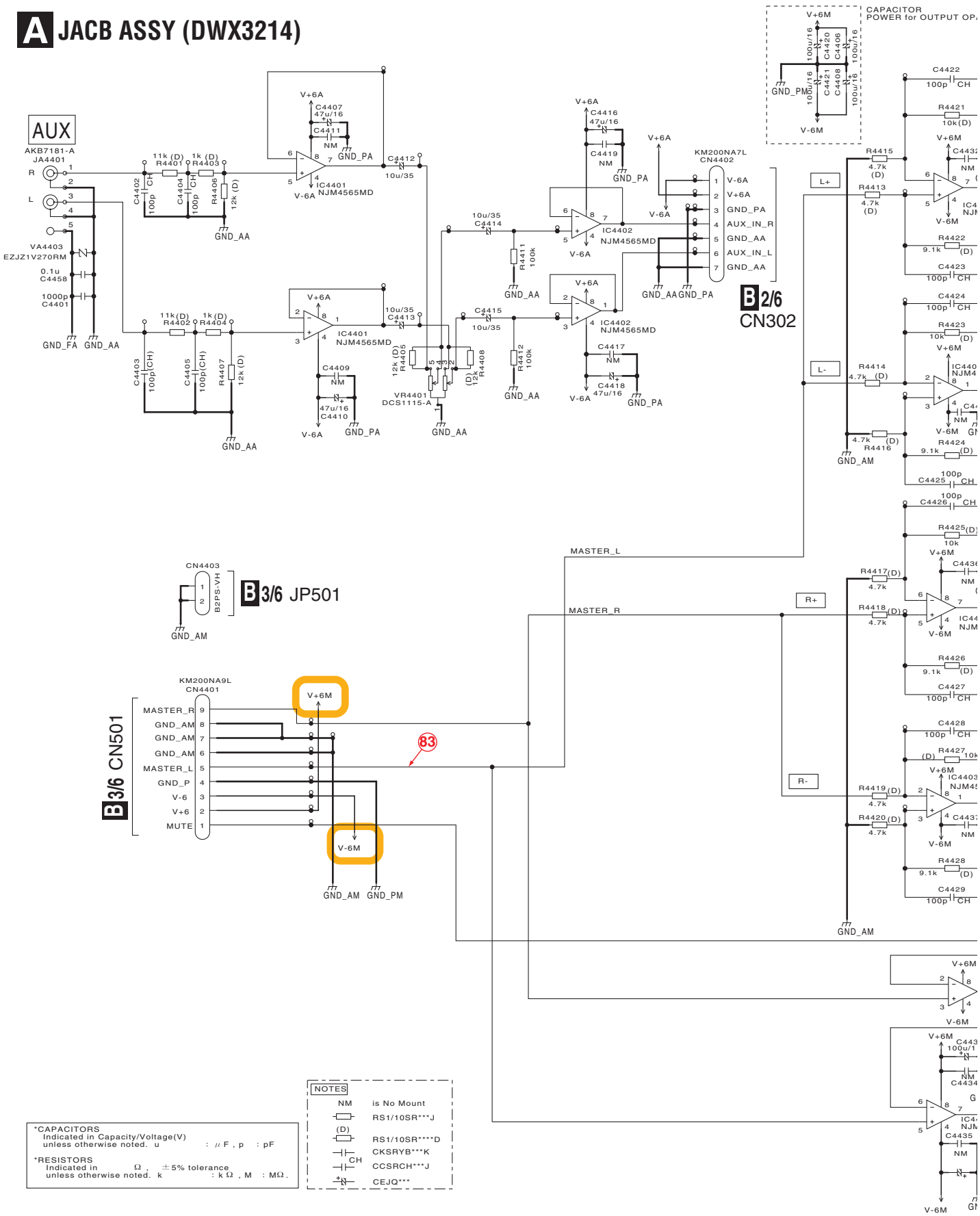

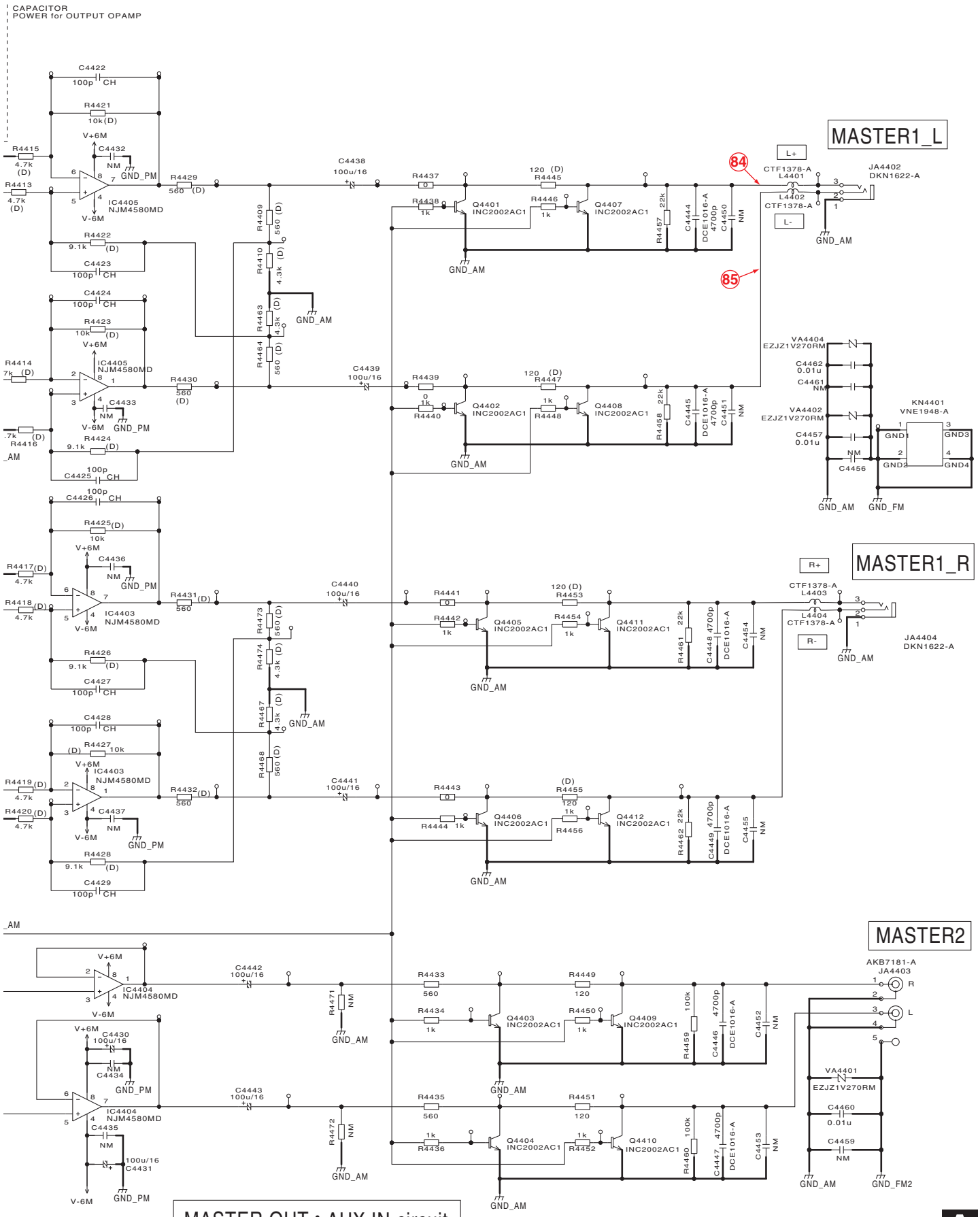

MASTER OUT・AUX IN circuit

10.2 UCOM ASSY (1/6)

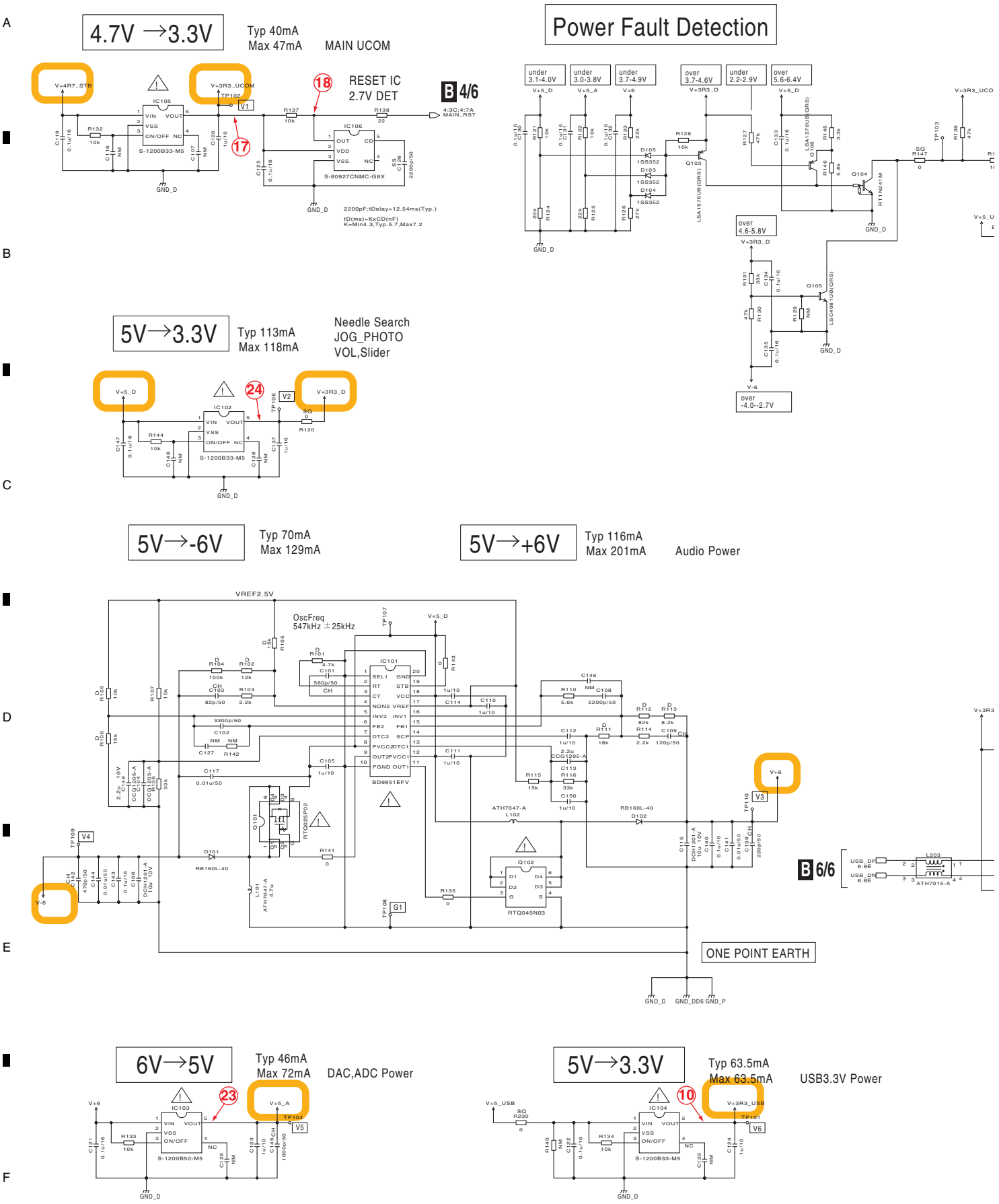

B 1/6 UCOM ASSY (DWX3209)

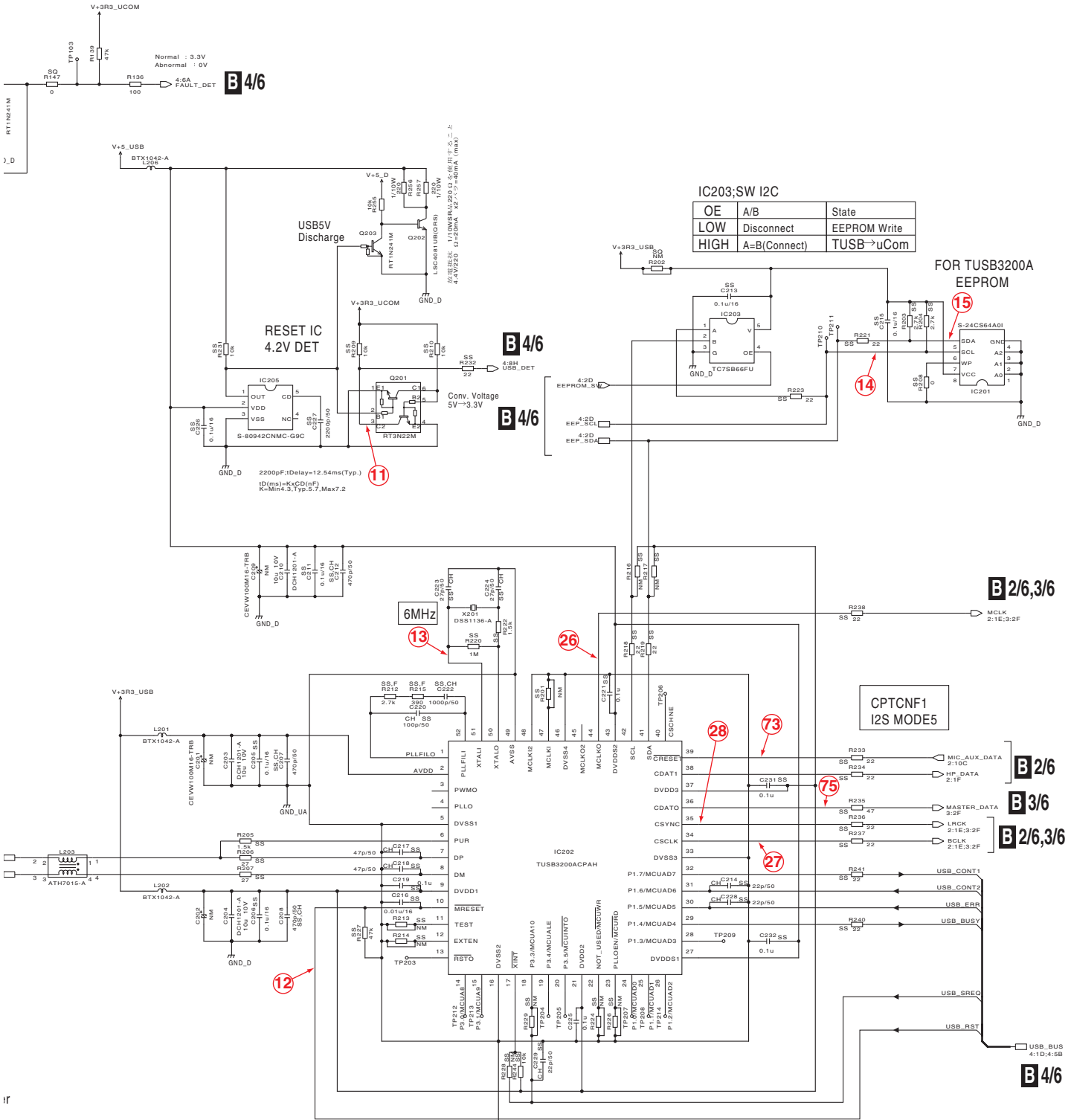

B 1/6

10.3 UCOM ASSY (2/6)

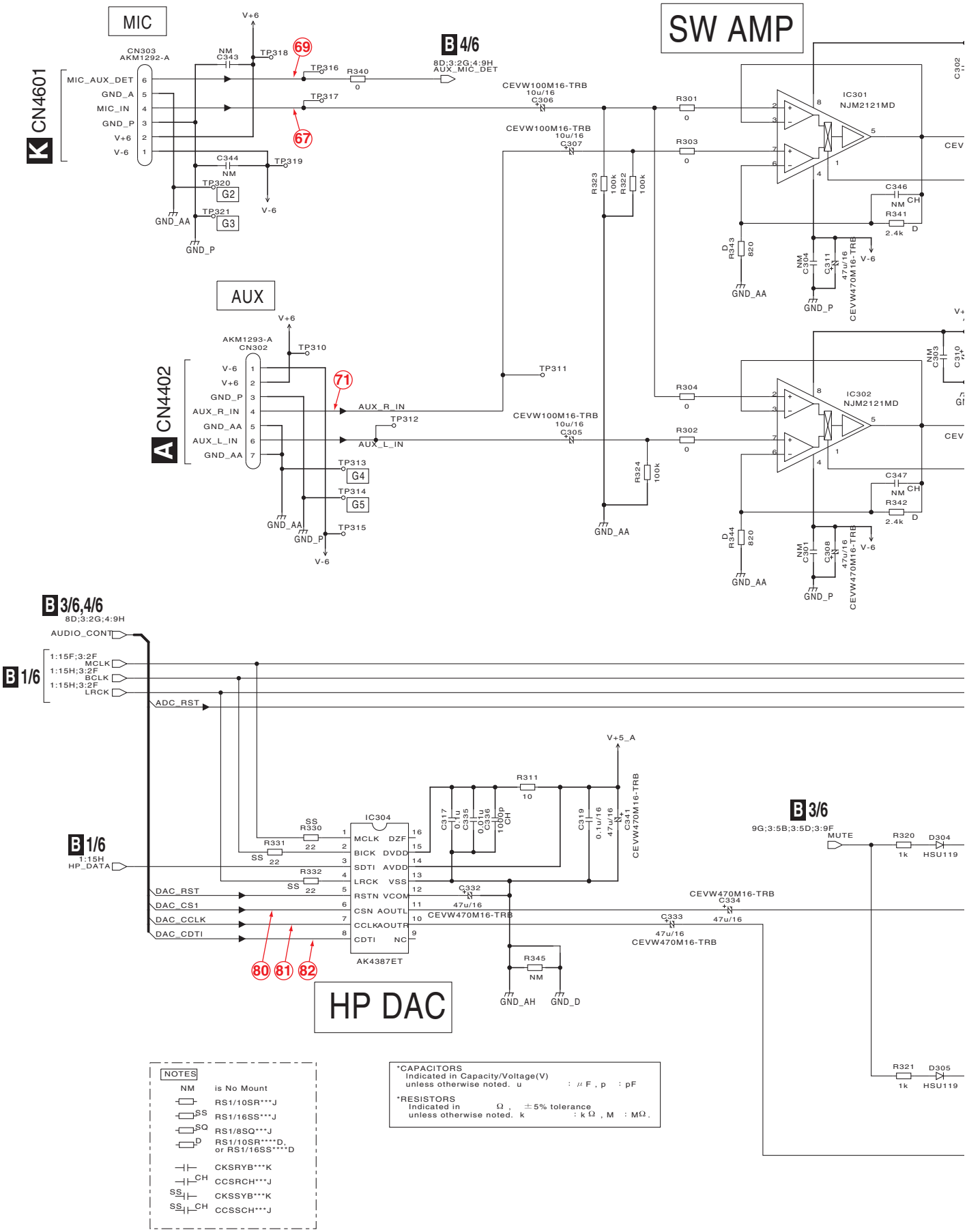

B 2/6

B 2/6 UCOM ASSY (DWX3209)

MIC/AUX ADC

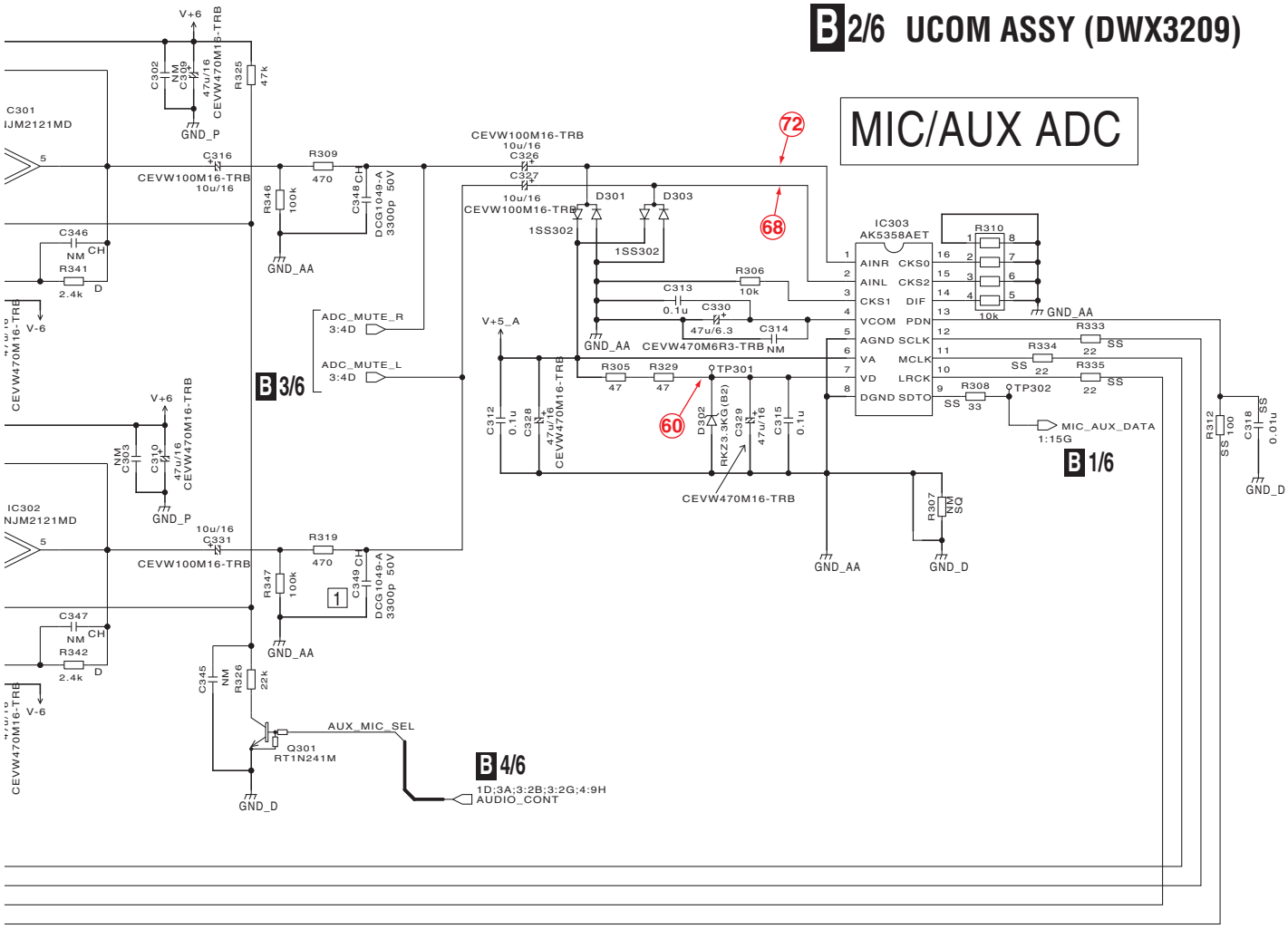

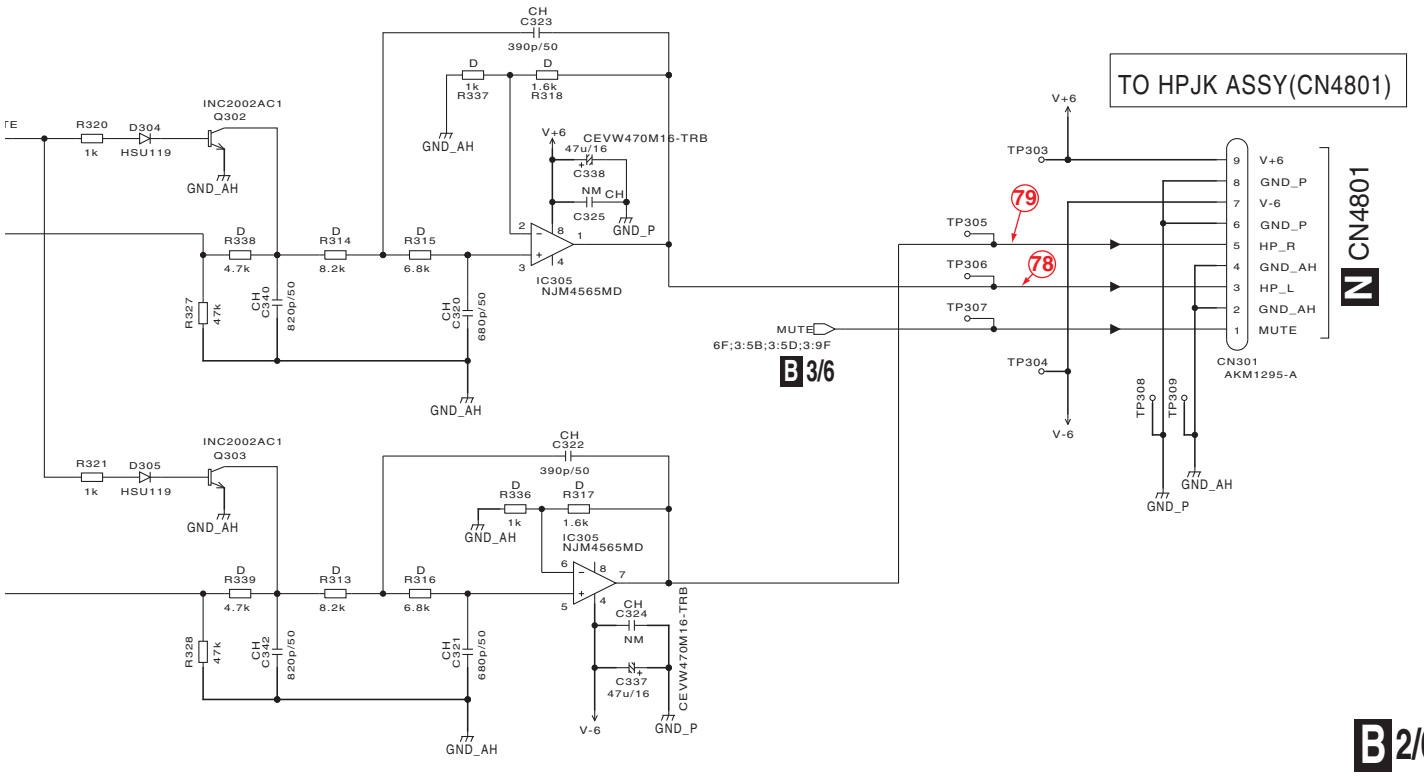

10.4 UCOM ASSY (3/6)

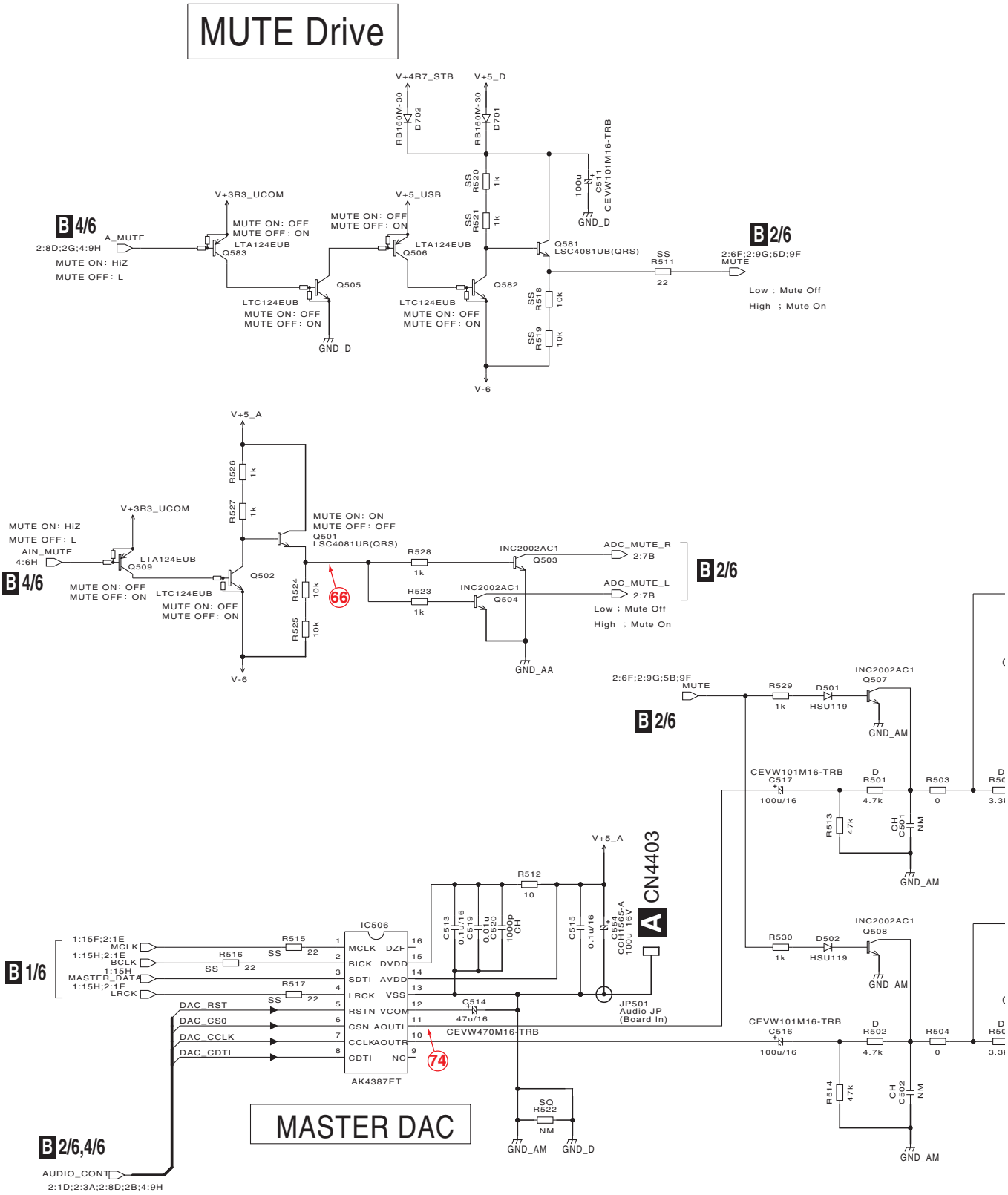

B 3/6

B 3/6 UCOM ASSY (DWX3209)

NOTES

NM	is No Mount
	RS1/10SR***J
SS	RS1/16SS***J
SQ	RS1/8SQ***J
D	RS1/10SR****D, or RS1/16SS****D
	CKSRYB***K
CH	CCSRCH***J
SS	CKSSYB***K
SS CH	CCSSCH***J

*CAPACITORS
Indicated in Capacity/Voltage(V)
unless otherwise noted. u : μF, p : pF

*RESISTORS
Indicated in Ω, ±5% tolerance
unless otherwise noted. k : kΩ, M : MΩ.

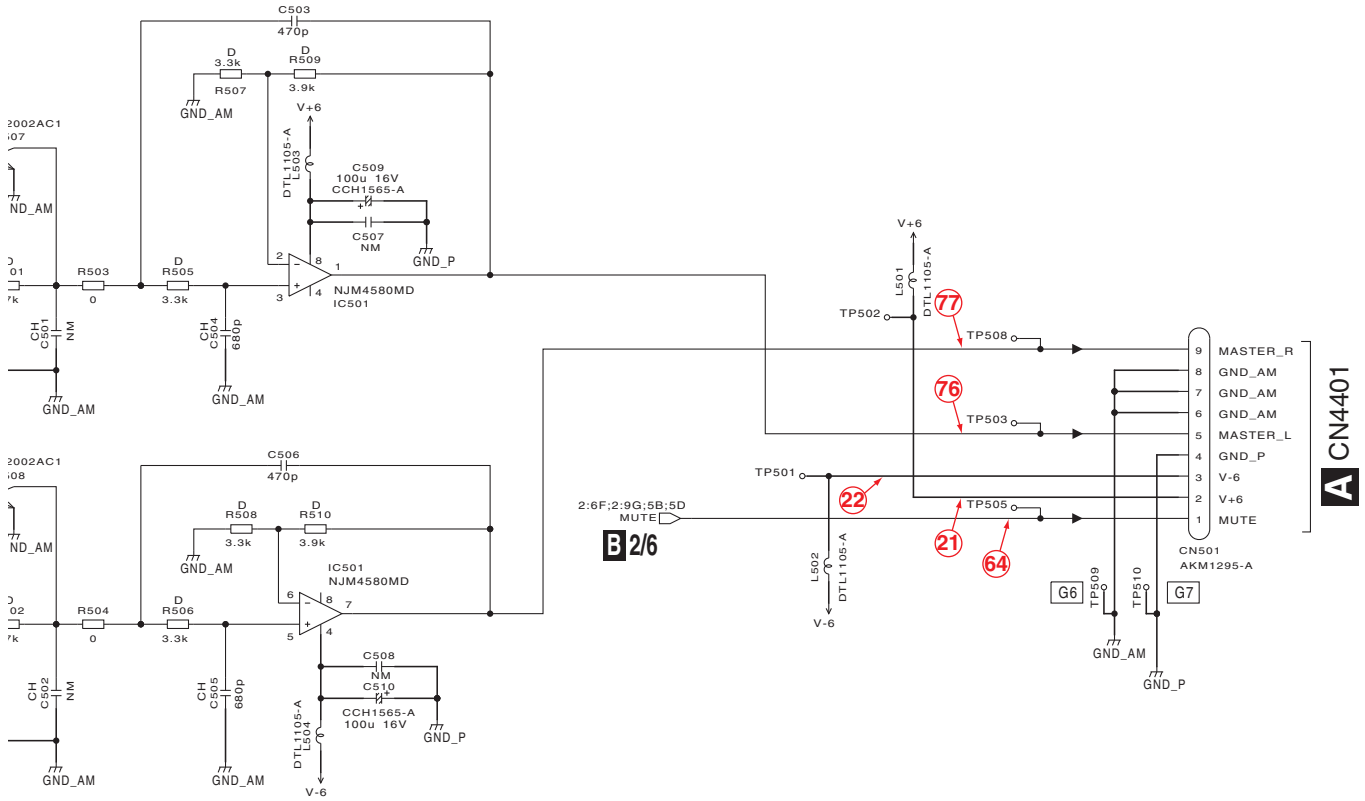

10.5 UCOM ASSY (4/6)

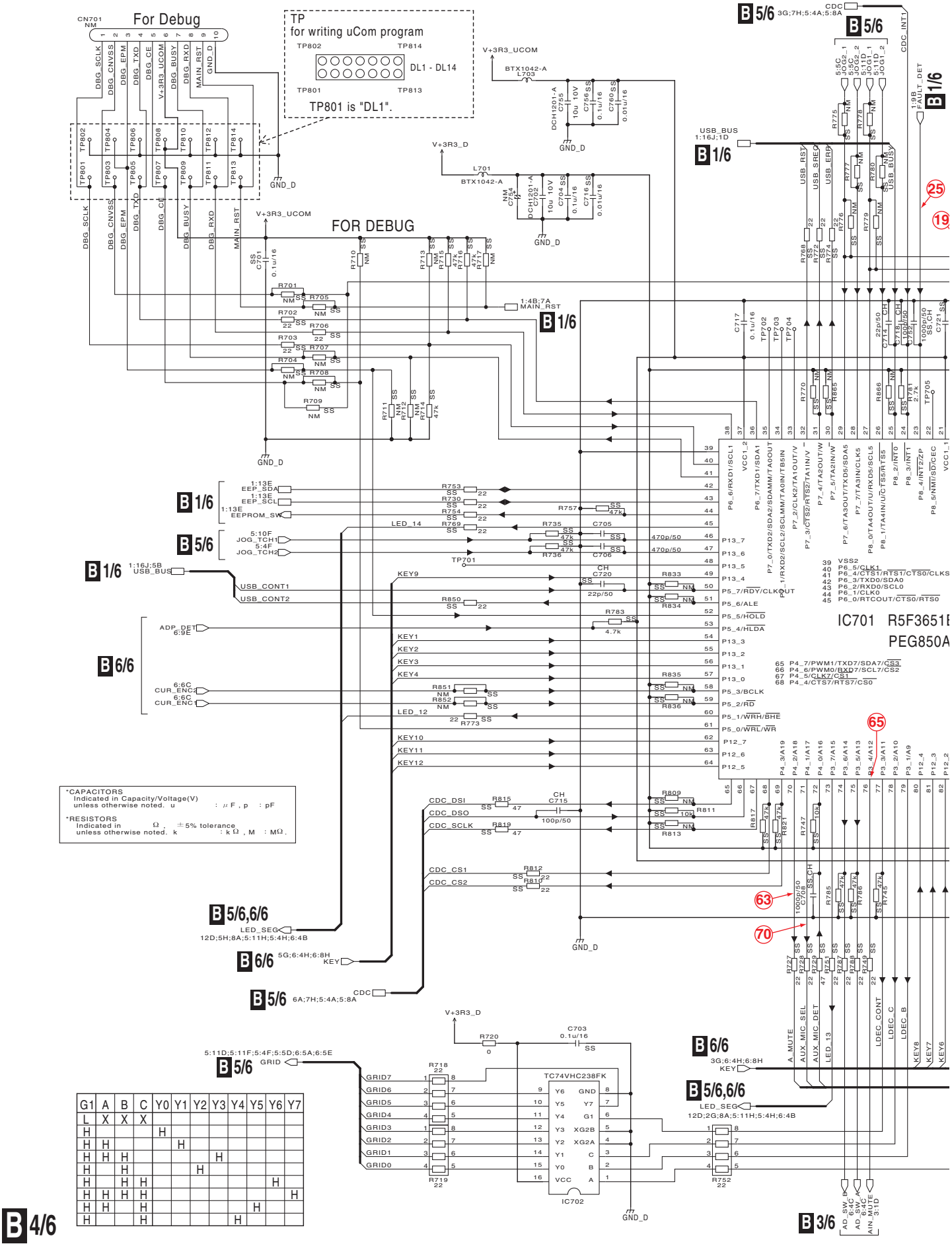

G1	A	B	C	Y0	Y1	Y2	Y3	Y4	Y5	Y6	Y7
L	X	X	X								
H				H							
H	H				H						
H	H	H					H				
H		H				H					
H		H	H							H	
H	H	H	H								H
H	H		H						H		
H			H					H			

B 4/6 UCOM ASSY (DWX3209)

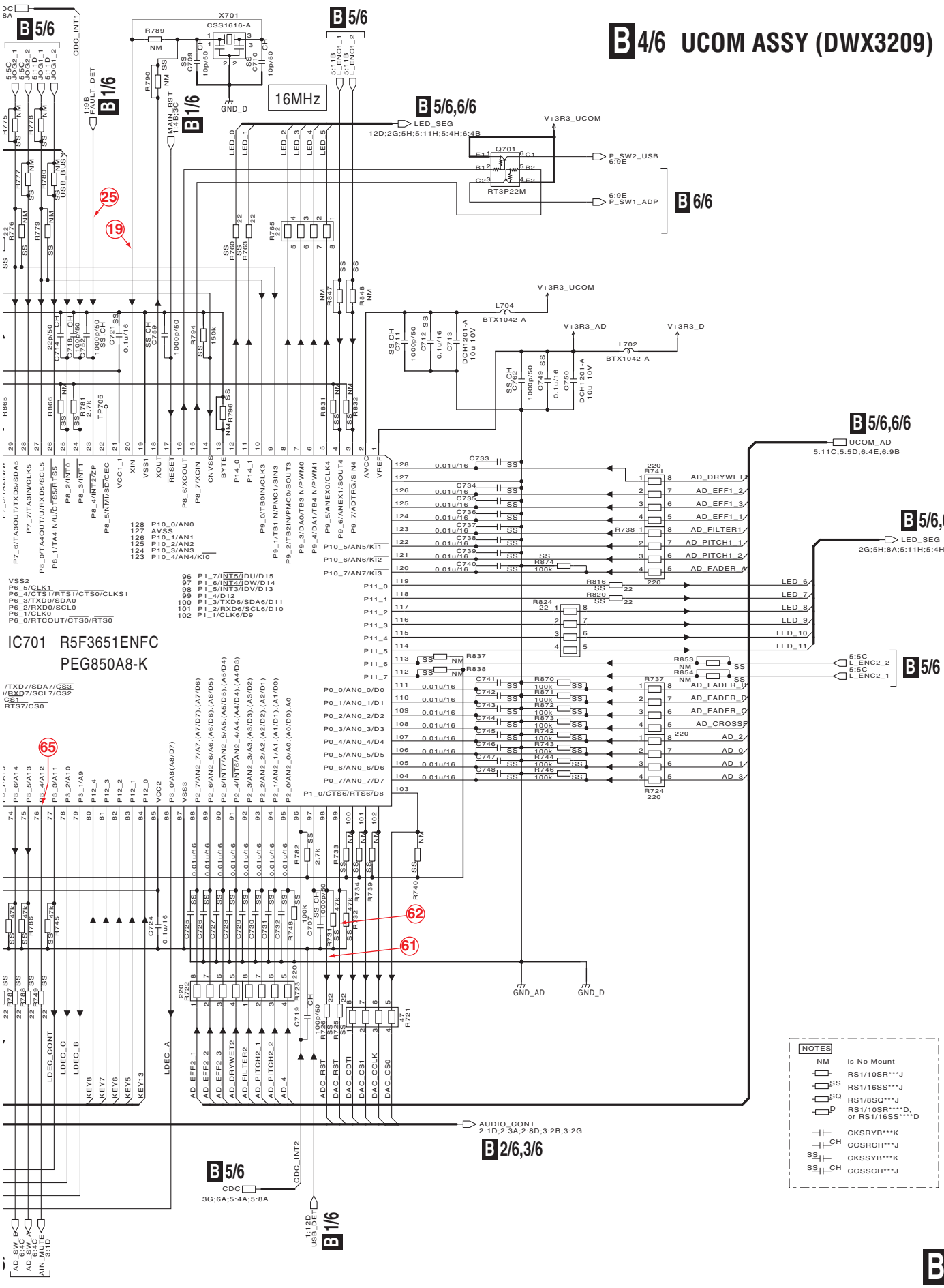

10.6 UCOM ASSY (5/6)

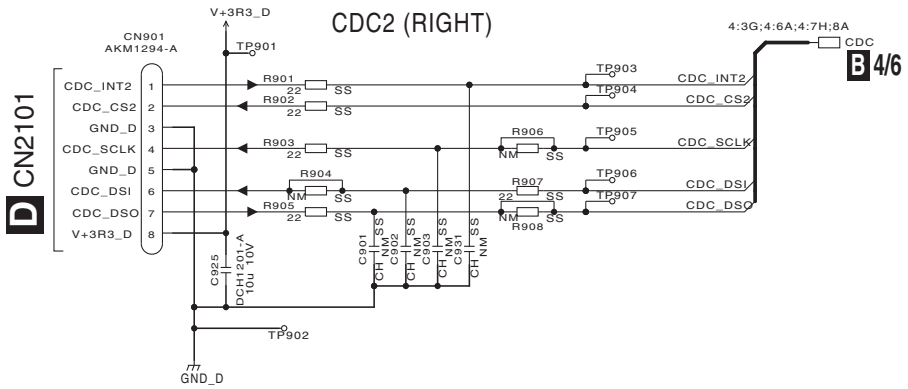

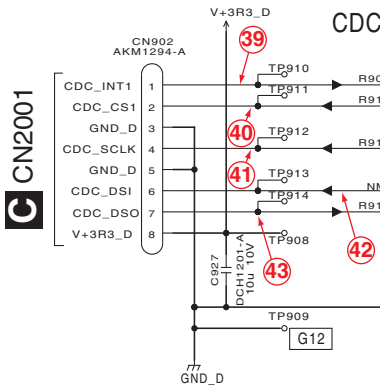

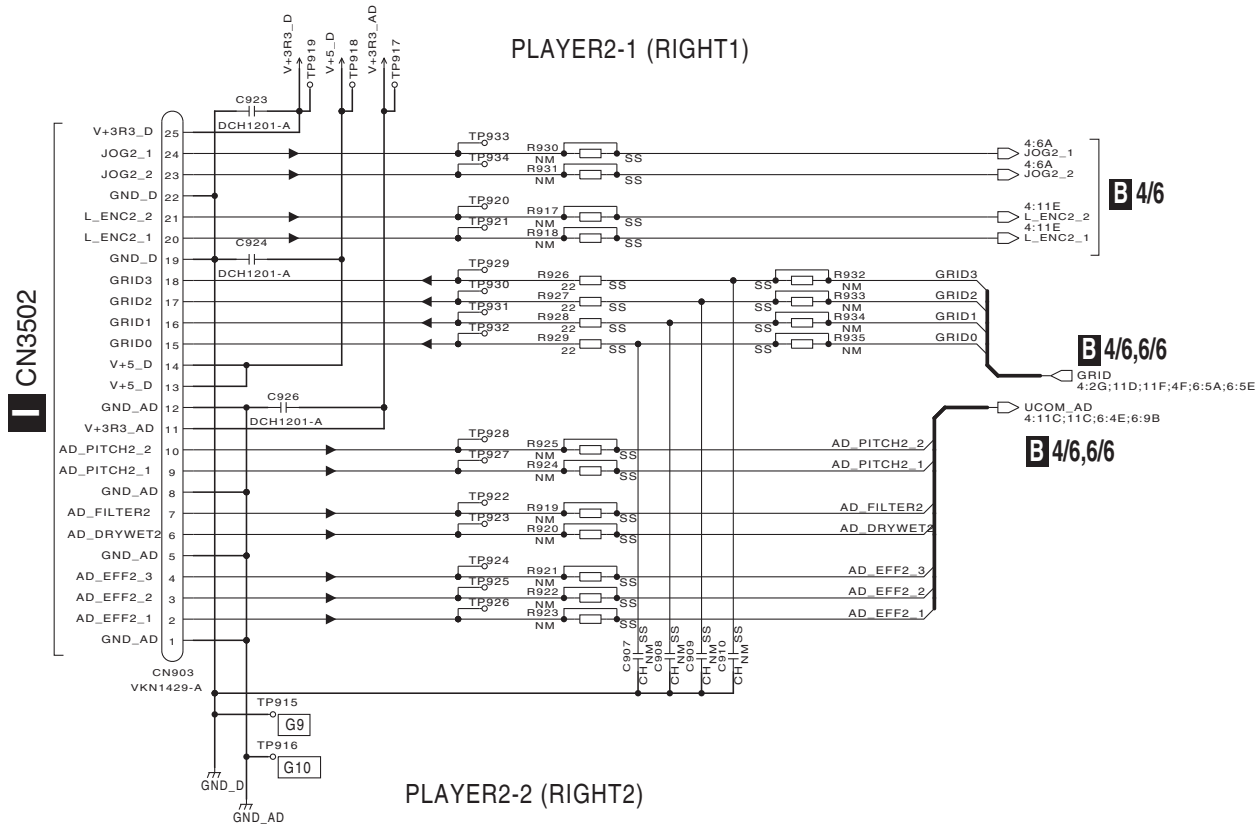

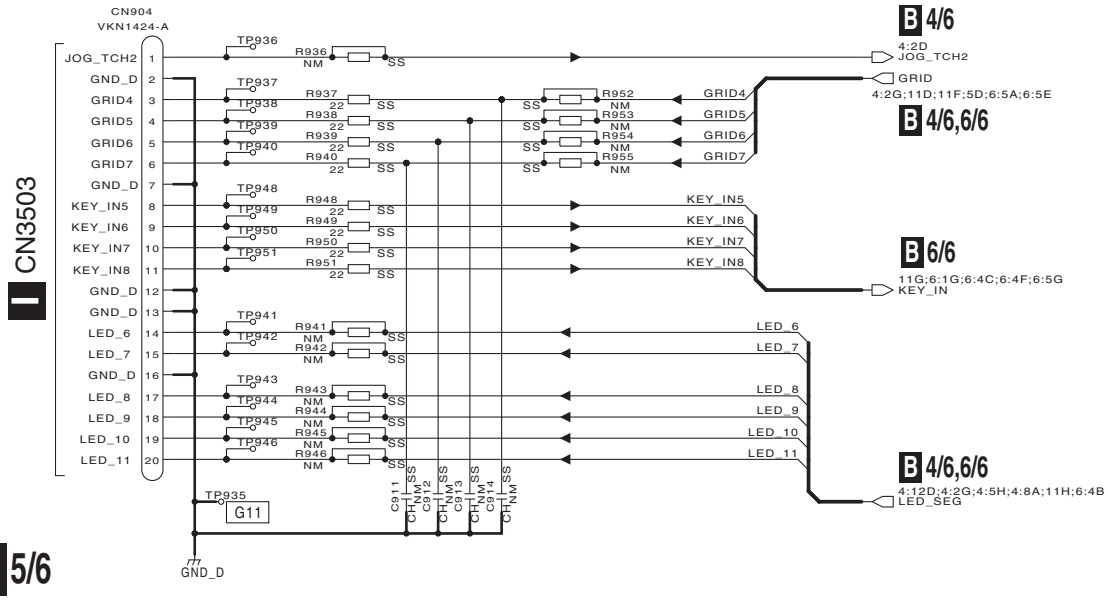

B 5/6

B 5/6 UCOM ASSY (DWX3209)

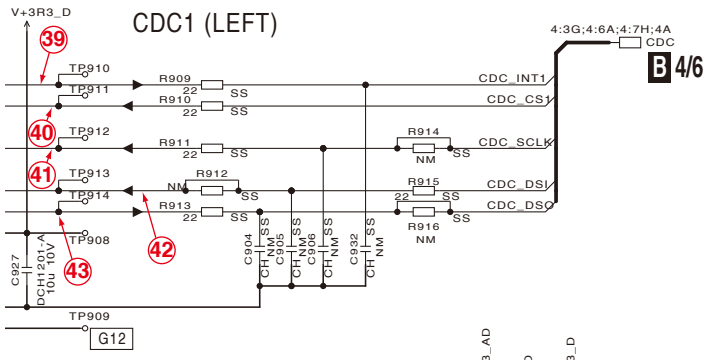

*CAPACITORS
Indicated in Capacity/Voltage(V)
unless otherwise noted. u : μF, p : pF

*RESISTORS
Indicated in Ω, ±5% tolerance
unless otherwise noted. k : kΩ, M : MΩ.

NOTES

NM	is No Mount
SS	RS1/10SR***J
	RS1/16SS***J
SQ	RS1/8SQ***J
D	RS1/10SR****D, or RS1/16SS****D
	CKSRYB***K
CH	CCSRCH***J
SS	CKSSYB***K
SS CH	CCSSCH***J

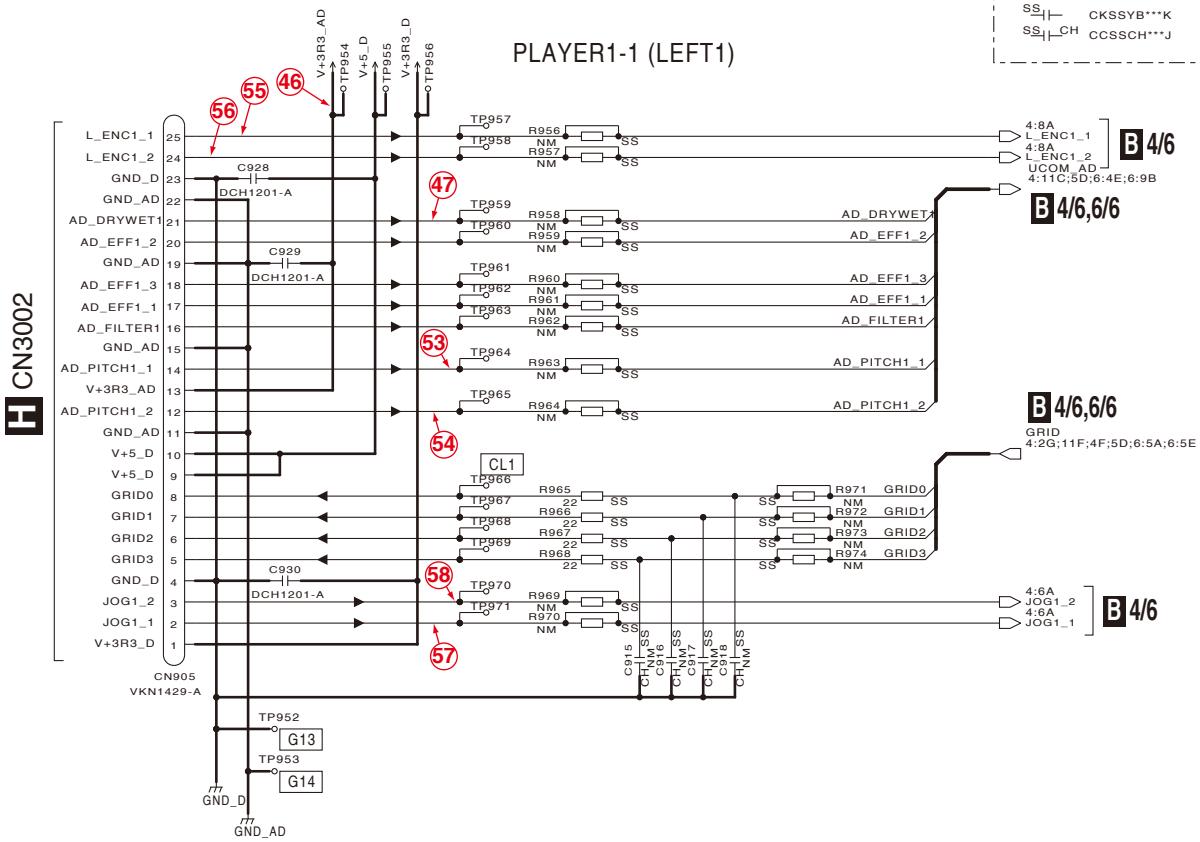

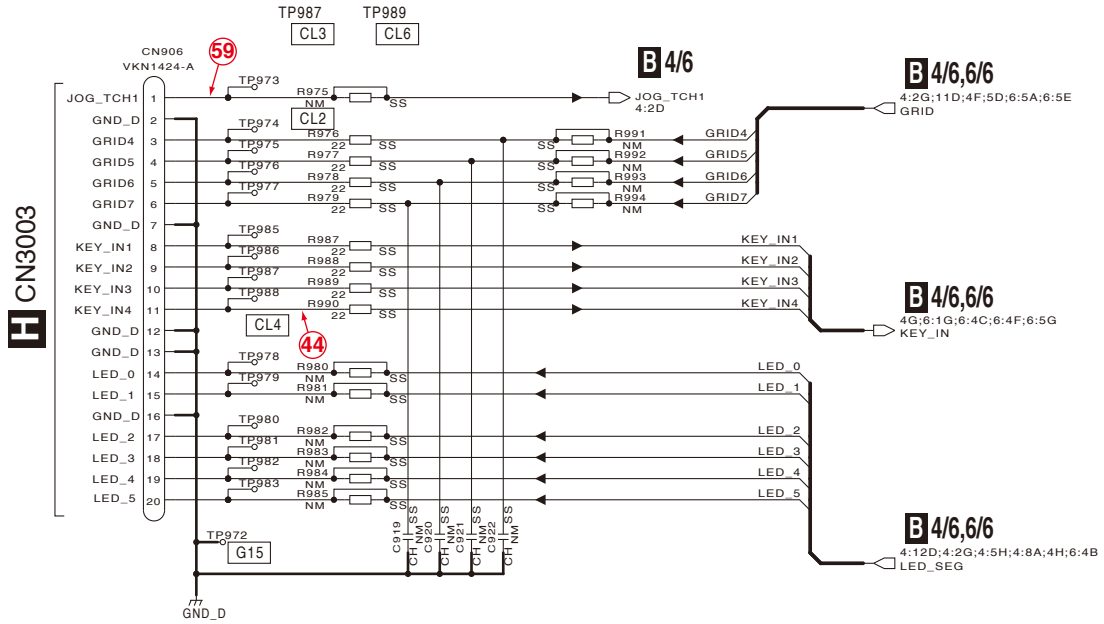

B 5/6

10.7 UCOM ASSY (6/6)

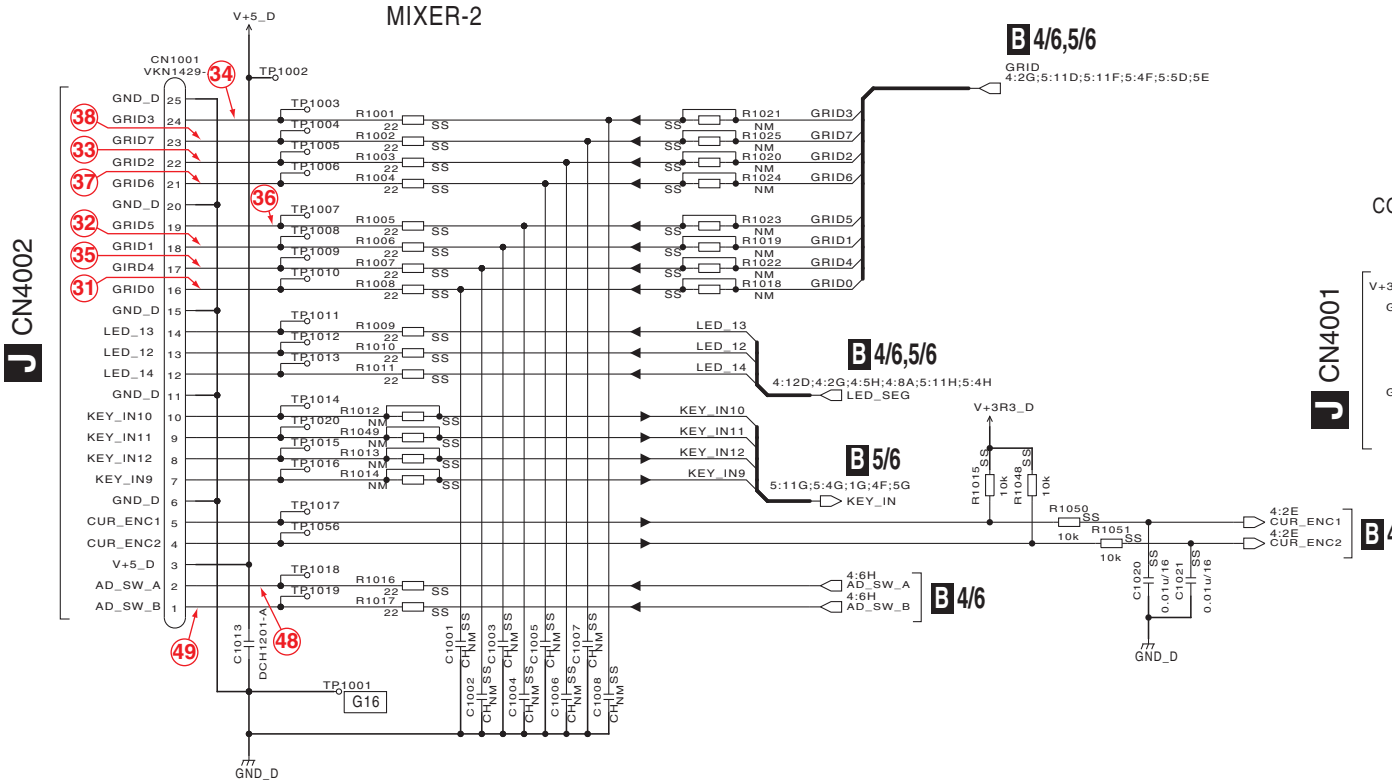

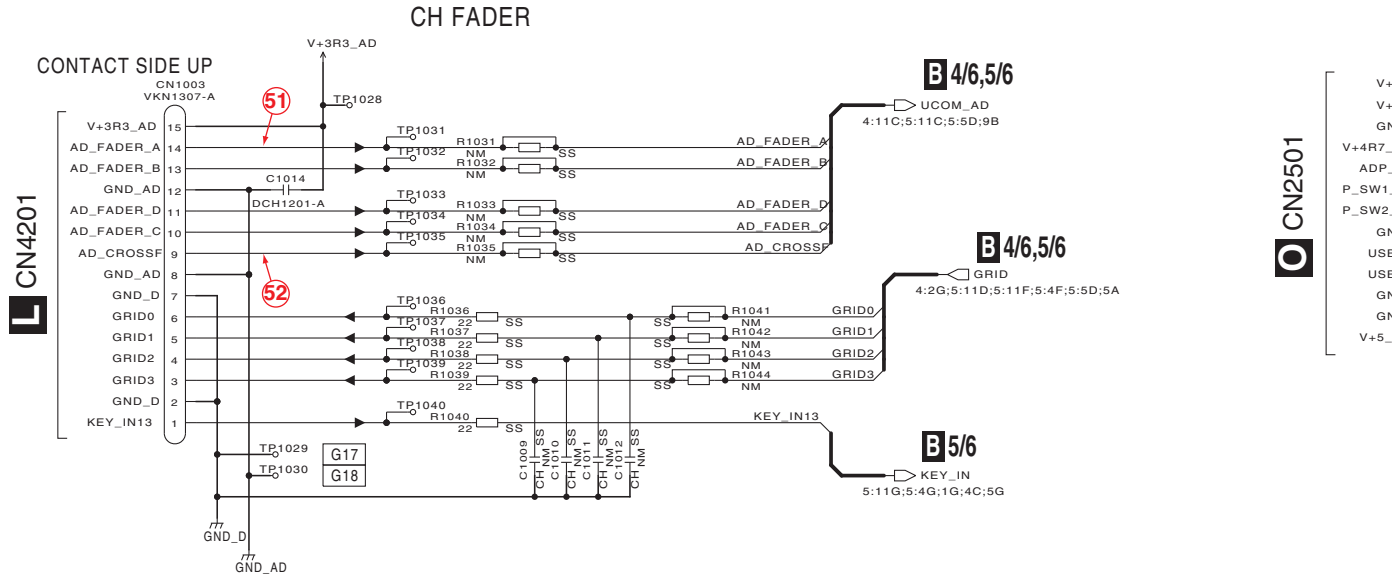

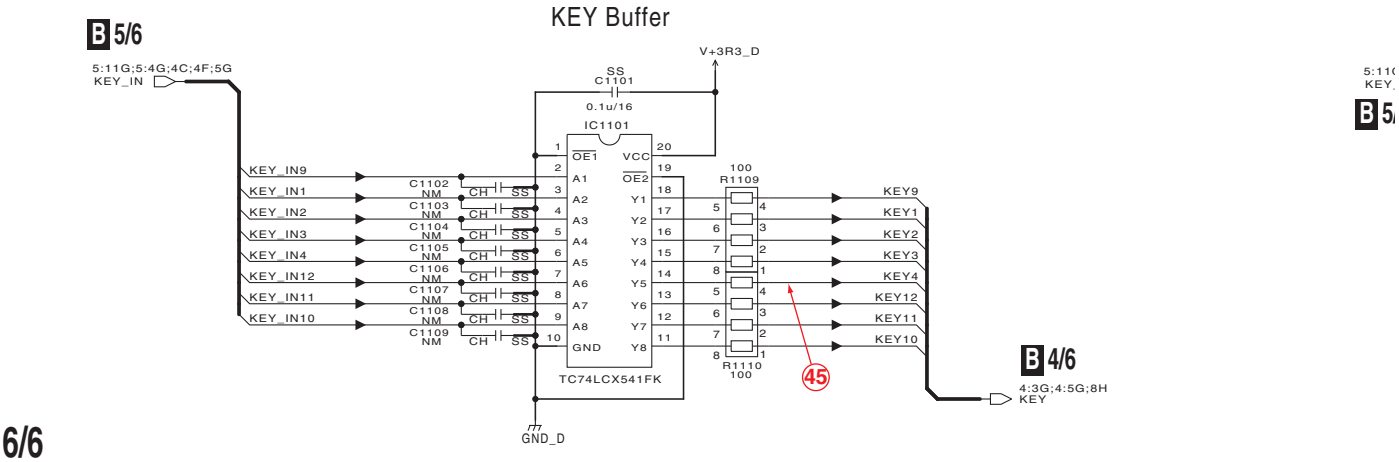

B 6/6

B 6/6 UCOM ASSY (DWX3209)

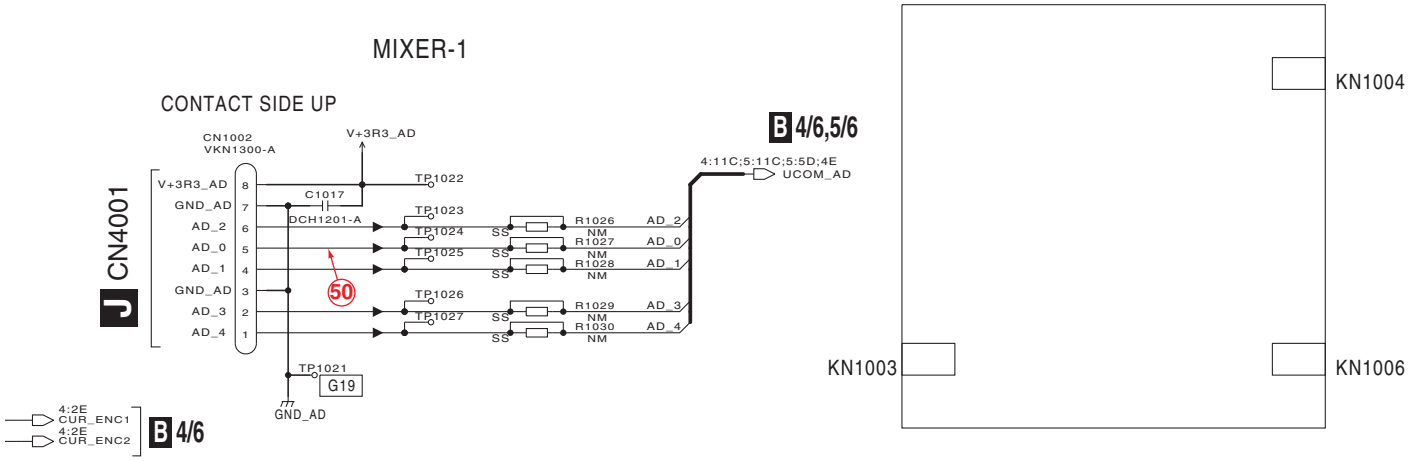

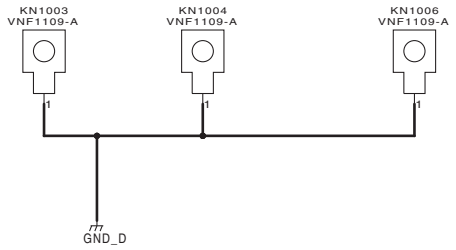

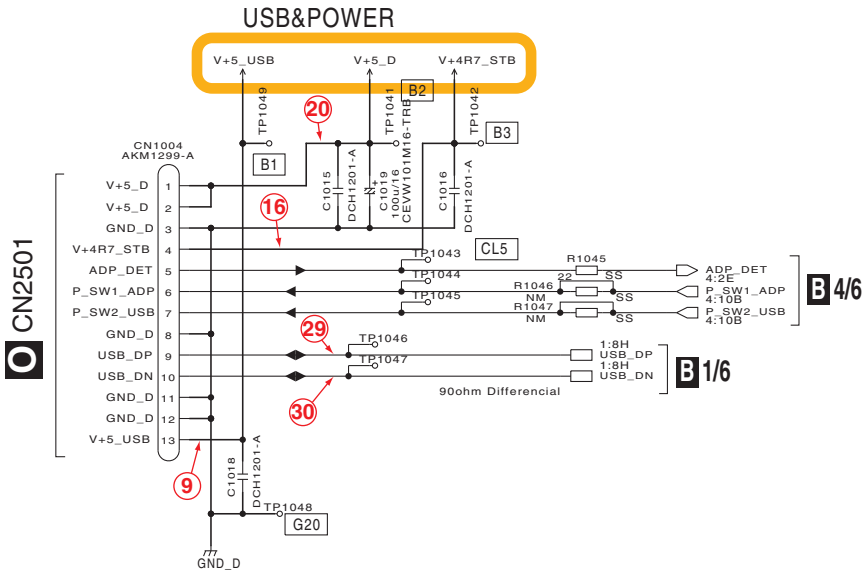

NOTES

NM	is No Mount
SS	RS1/10SR***J
SS	RS1/16SS***J
SQ	RS1/8SQ***J
D	RS1/10SR****D, or RS1/16SS****D
	CKSRYB***K
CH	CCSRCH***J
SS	CKSSYB***K
SS CH	CCSSCH***J

*CAPACITORS
Indicated in Capacity/Voltage(V)
unless otherwise noted. u : μF , p : pF

*RESISTORS
Indicated in Ω , ±5% tolerance
unless otherwise noted. k : kΩ , M : MΩ .

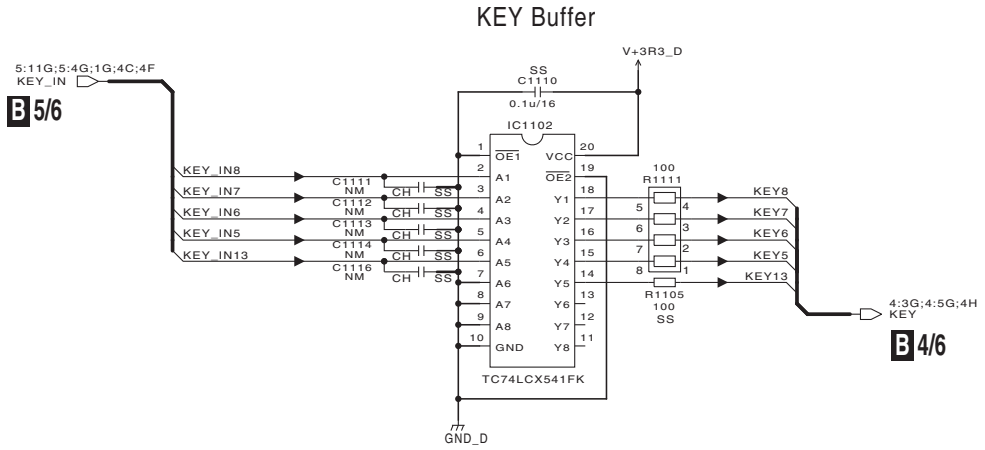

10.8 CDCB 1, CDCB 2, TCHB and JOGB ASSYS

Either the CDCB 1 Assy or CDCB 2 Assy is assembled here.
The CDCB 1 Assy and CDCB 2 Assy are interchangeably used and handled similarly in their production management.

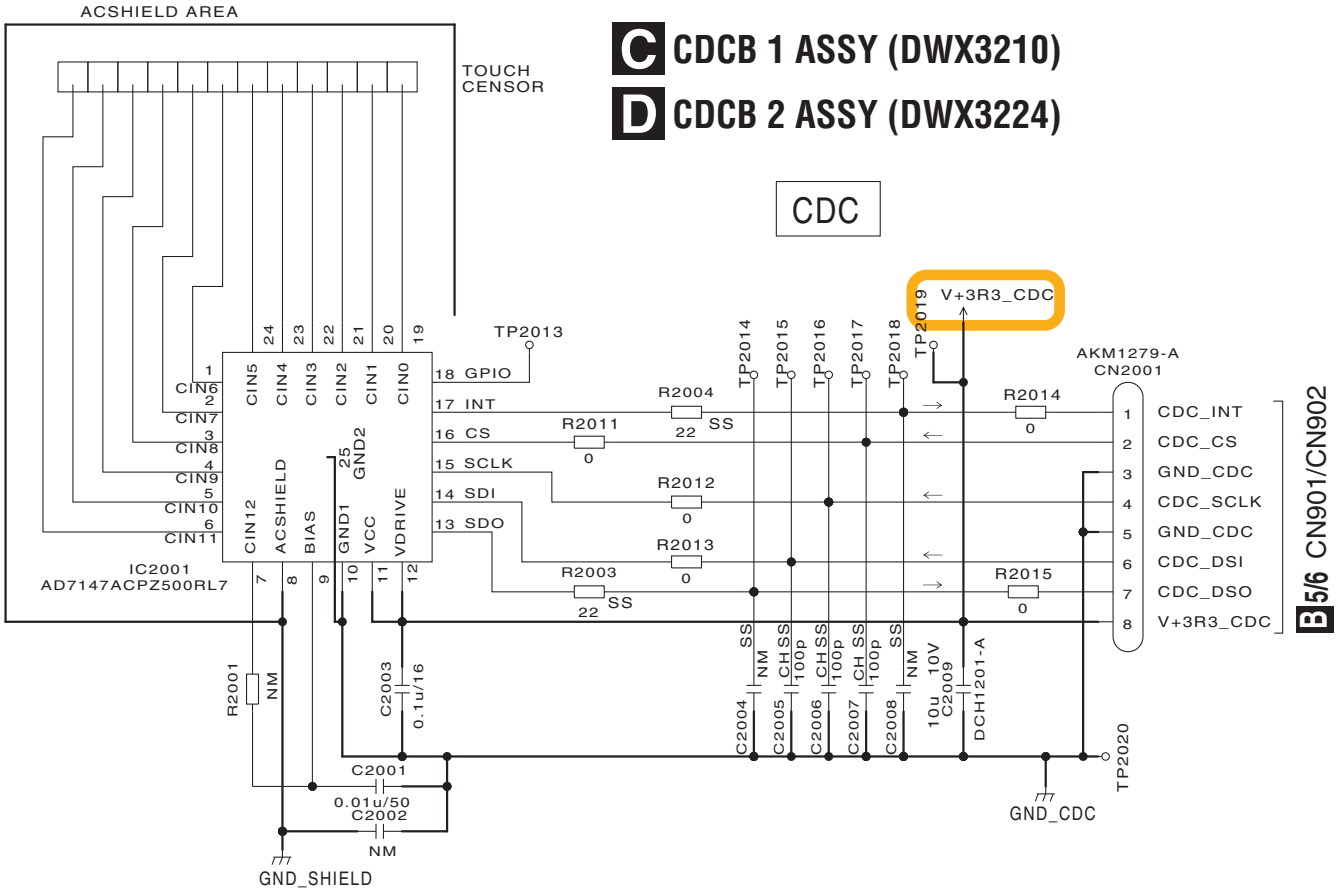

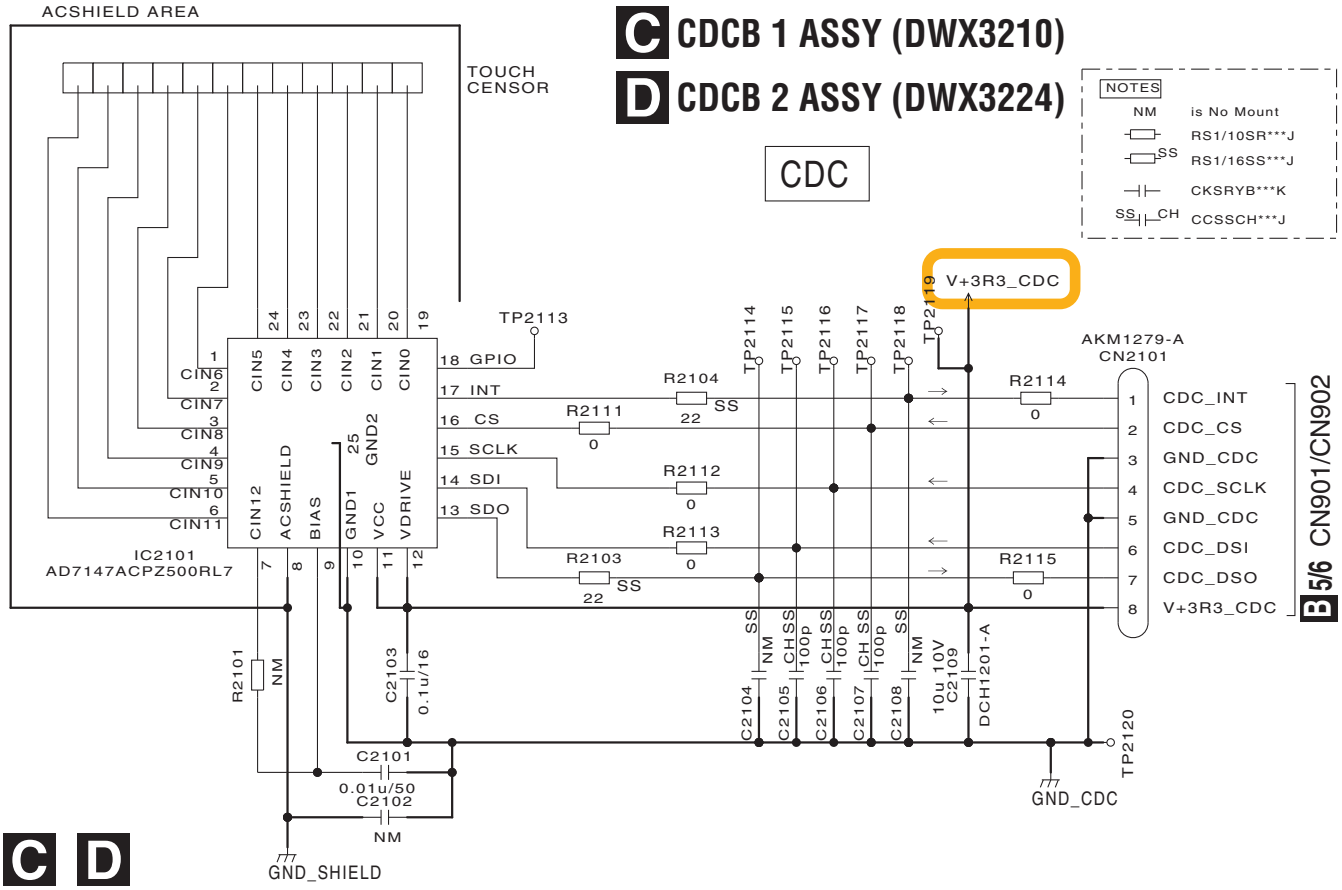

C D

E TCHB ASSY (DWS1433)

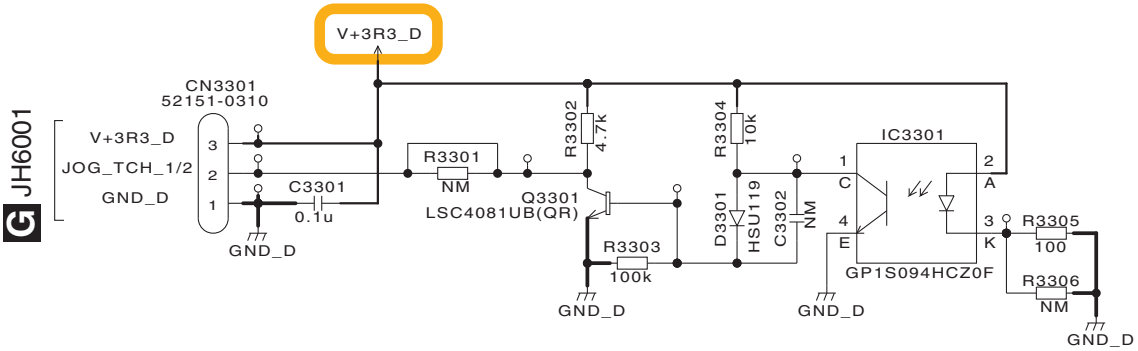

NOTES

NM is No Mount

RS1/10SR***J

CKSRYB***K

B 5/6 CN901/CN902

F JOGB ASSY (DWS1432)

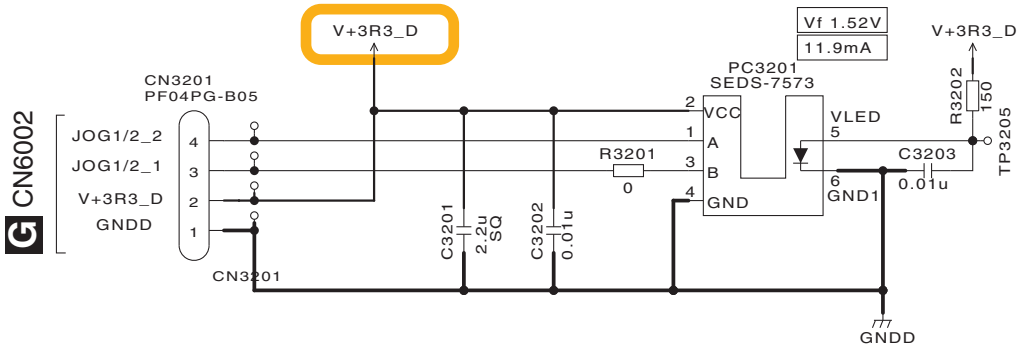

*CAPACITORS
Indicated in Capacity/Voltage(V)
unless otherwise noted. u : μF , p : pF

*RESISTORS
Indicated in Ω , ±5% tolerance
unless otherwise noted. k : kΩ , M : MΩ .

NOTES

RS1/10SR***J

CKSRYB or CKSYB

B 5/6 CN901/CN902

10.9 LEDB ASSY

R6001～R6048 : 180 Ω
D6001～D6024 : SLI-343U3R(HJKL)-TS
Q6005～Q6008 : LSA1576UB(QR)-TLB
Q6009～Q6014 : 2SC4154(EFG)-TLB

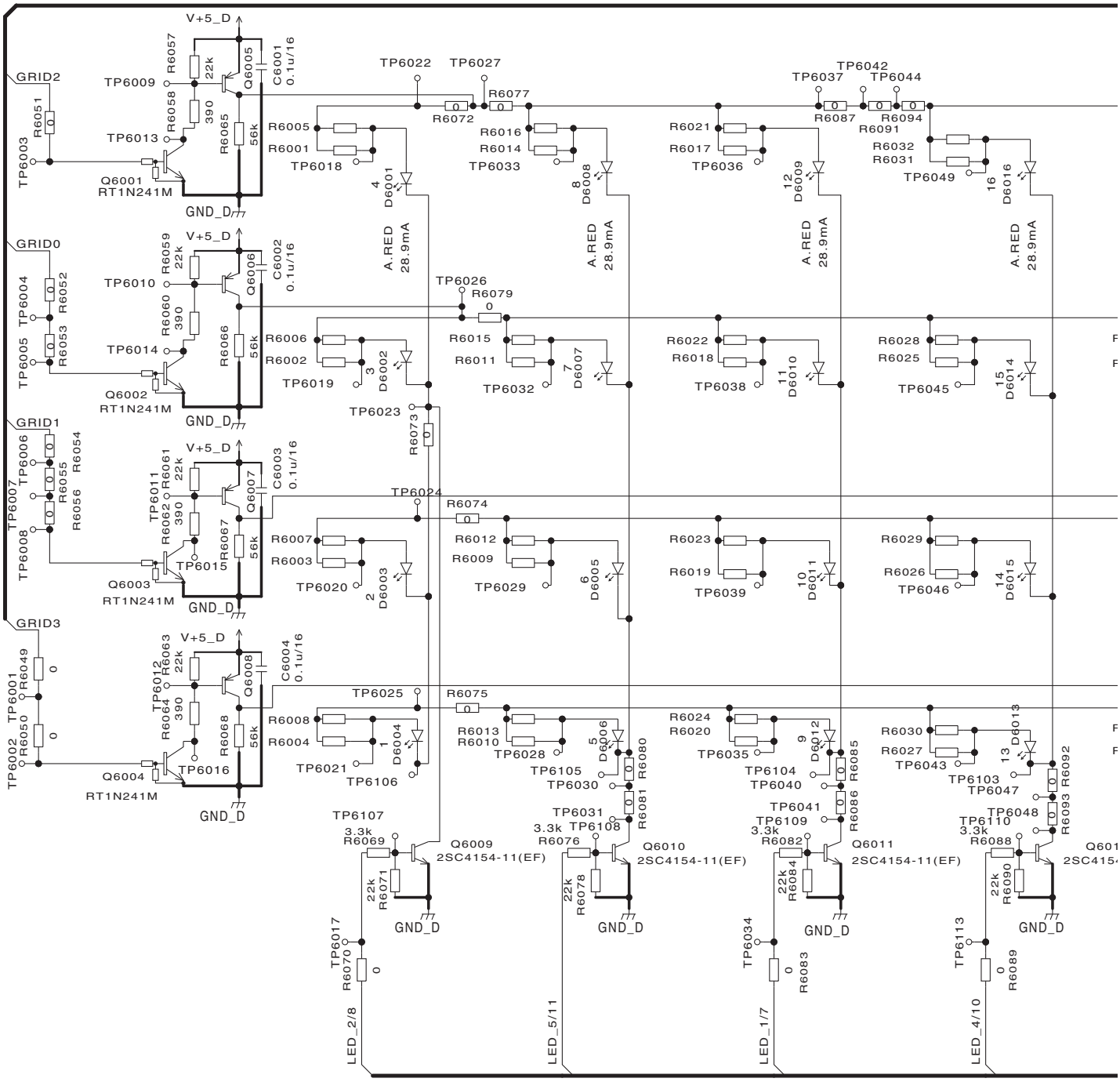

G LEDB ASSY (DWS1434)

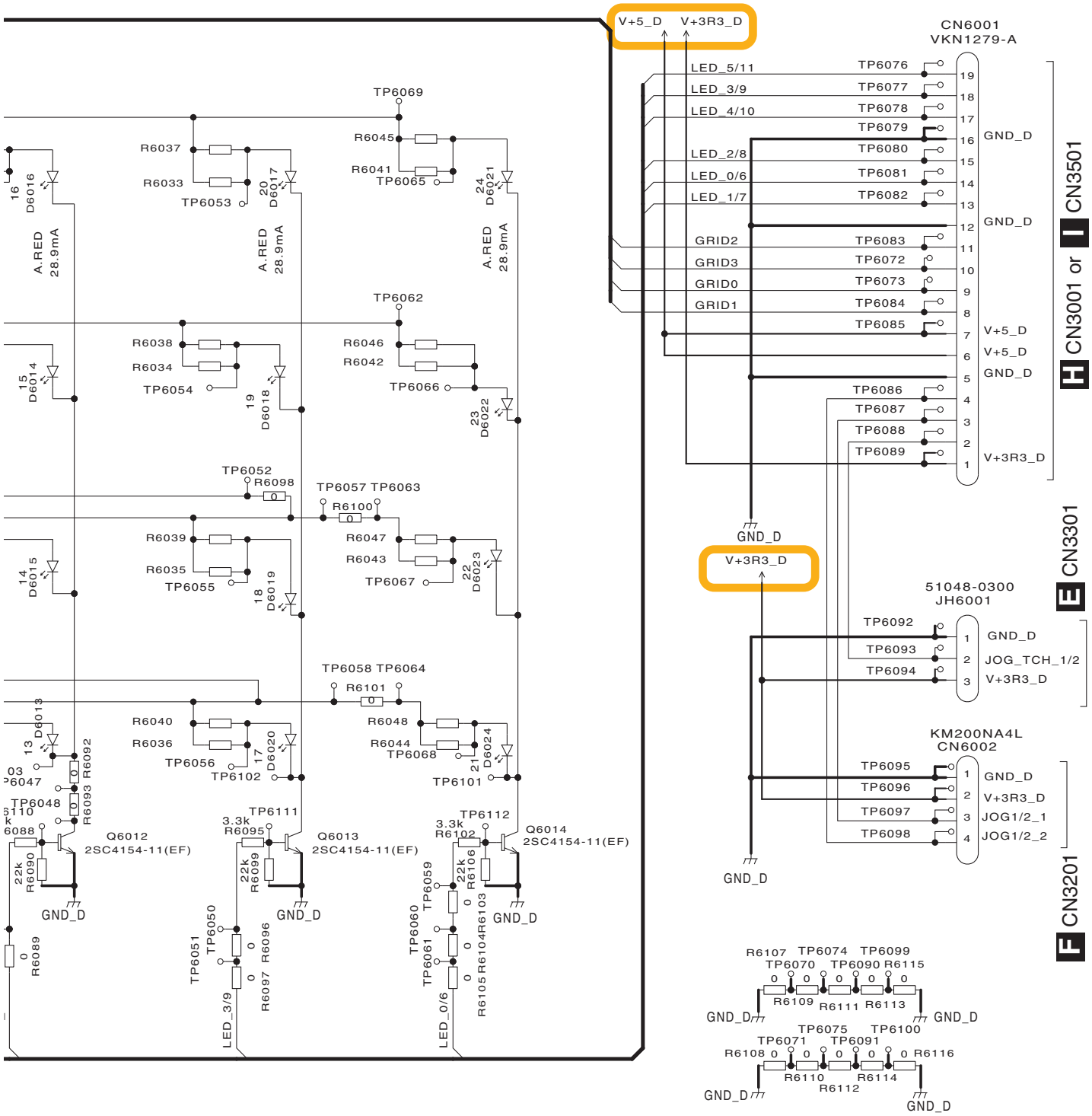

10.10 CDJ1B ASSY

H CDJ1B ASSY (DWS1430)

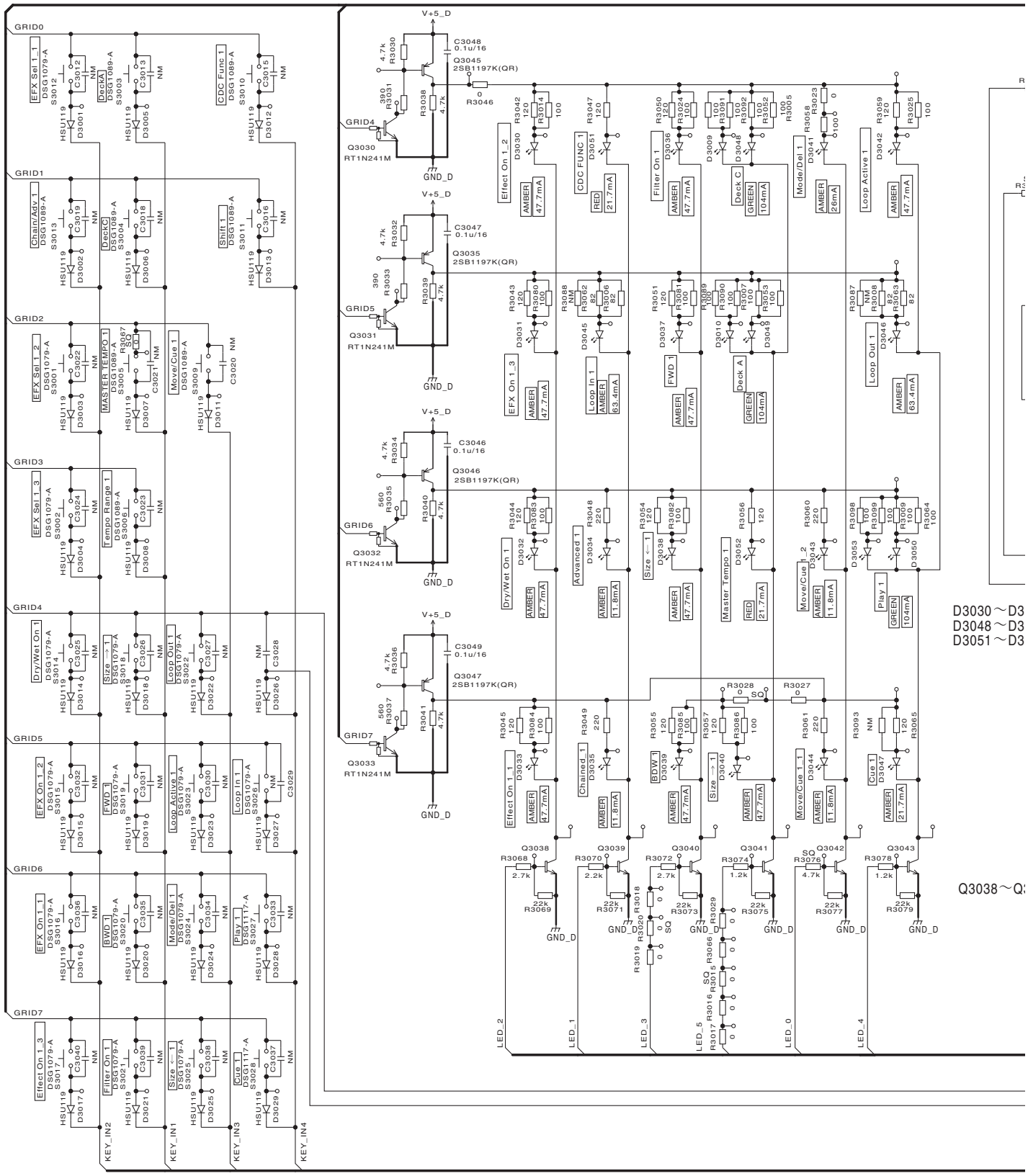

*CAPACITORS
Indicated in Capacity/Voltage(V)
unless otherwise noted. u : μF , p : pF

*RESISTORS
Indicated in Ω , ±5% tolerance
unless otherwise noted. k : kΩ , M : MΩ .

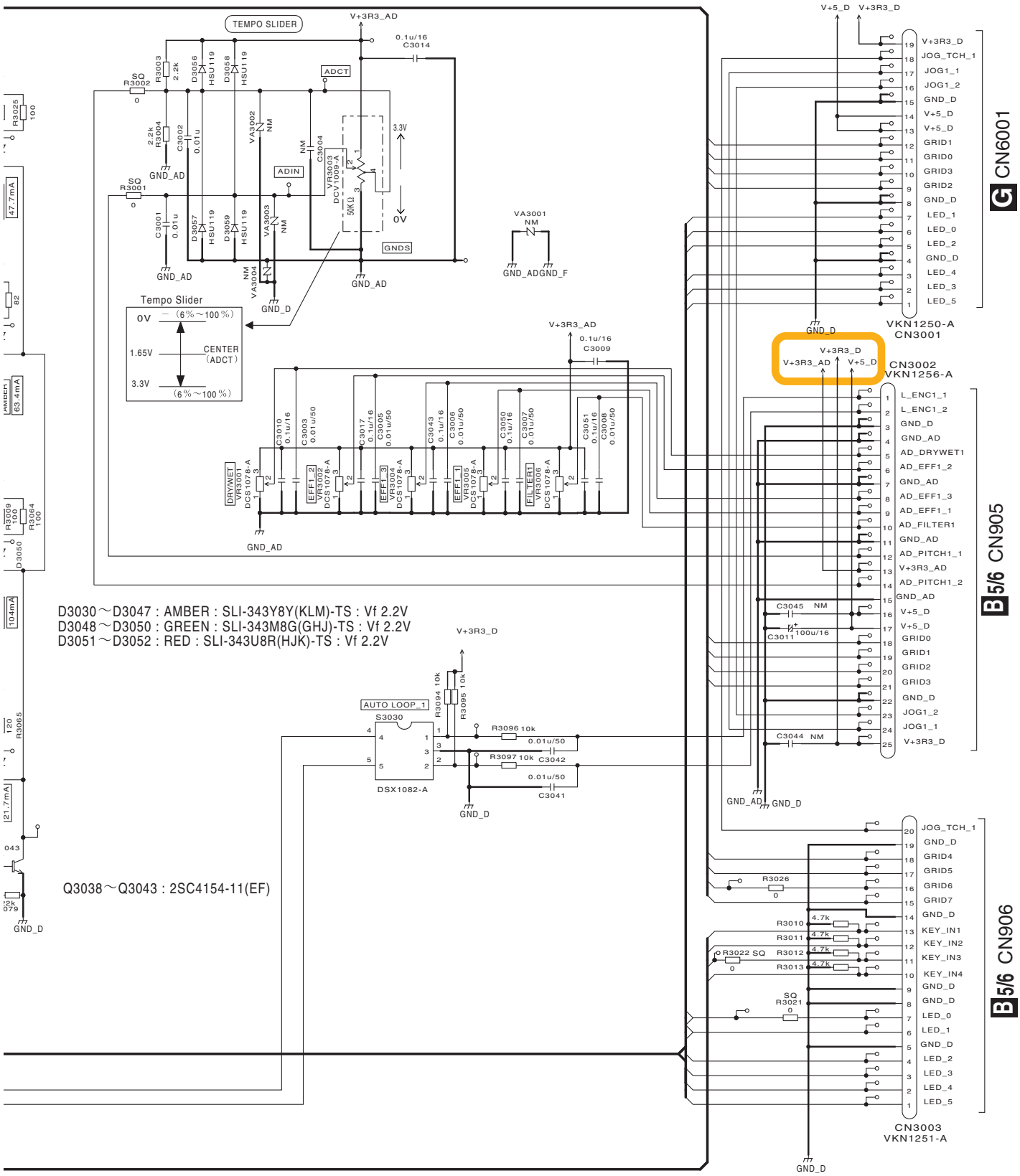
TEMPO SLIDER
V+3R3_AD
0.1u/16
C3014
ADCT
ADIN
GNDS
3.3V
0V
GND_AD
GND_D
GND_AD GND_F
VA3001
NM
Tempo Slider
0V
(6%～100%)
1.65V
CENTER
(ADCT)
3.3V
(6%～100%)
V+3R3_AD
0.1u/16
C3009
DRYWET
EFF1_2
EFF1_3
EFF1_1
FILTER1
D3030～D3047 : AMBER : SLI-343Y8Y(KLM)-TS : Vf 2.2V
D3048～D3050 : GREEN : SLI-343M8G(GHJ)-TS : Vf 2.2V
D3051～D3052 : RED : SLI-343U8R(HJK)-TS : Vf 2.2V
V+3R3_D
AUTO LOOP_1
S3030
DSX1082-A
R3094 10k
R3095 10k
R3096 10k
R3097 10k
C3042
C3041
0.01u/50
Q3038～Q3043 : 2SC4154-11(EF)
V+5_D V+3R3_D
CN6001
VKN1250-A
CN3001
CN3002
VKN1256-A
B5/6 CN905
C3045 NM
C3011 100u/16
C3044 NM
CN3003
VKN1251-A
B5/6 CN906
R3026
R3010 4.7k
R3011 4.7k
R3012 4.7k
R3013 4.7k
R3022 SQ
R3021
NOTES
NM is No Mount
RS1/10SR***J
RS1/8SQ***J
CKSRYB***K
CEJQ***

10.11 CDJ2B ASSY

I CDJ2B ASSY (DWS1431)

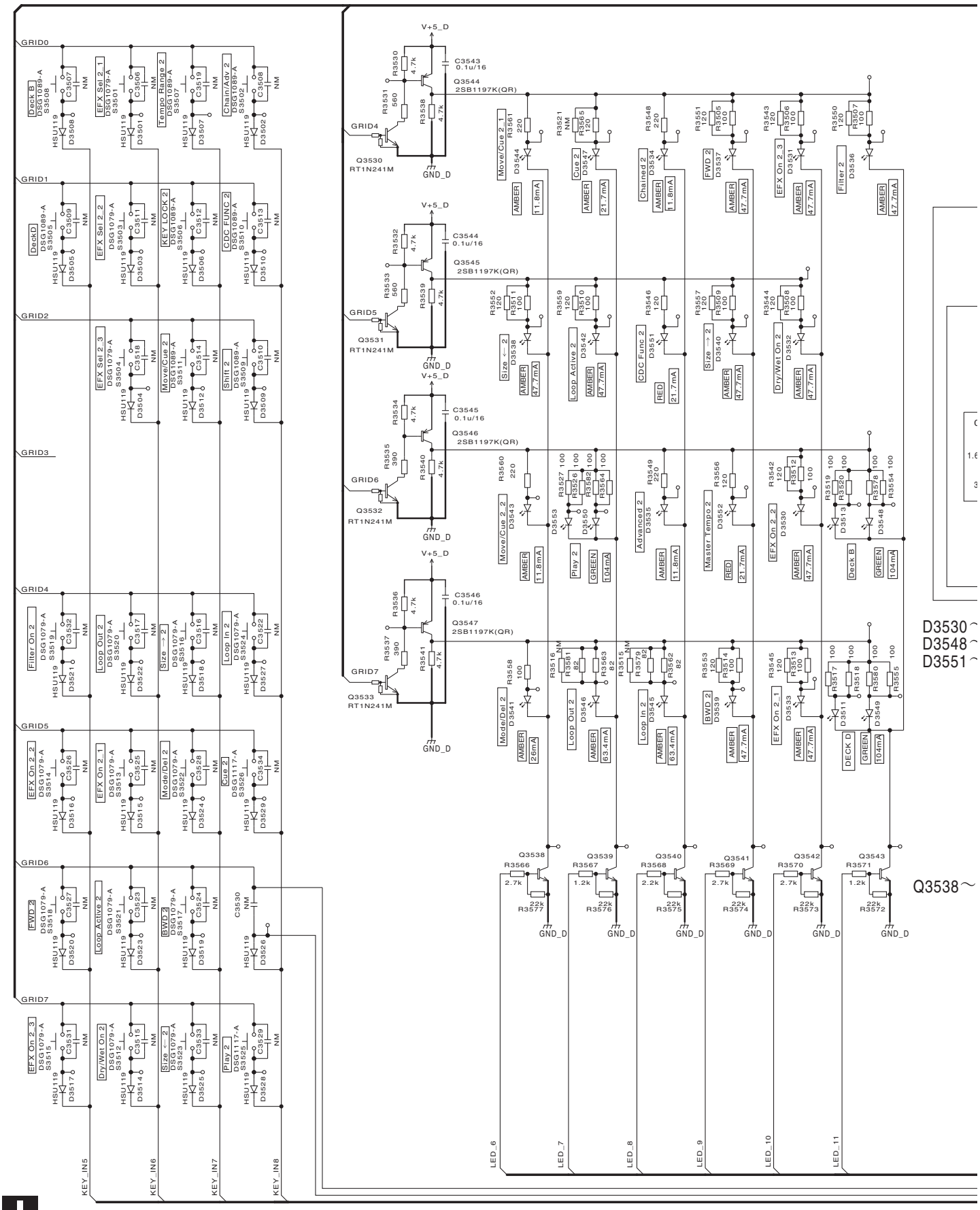

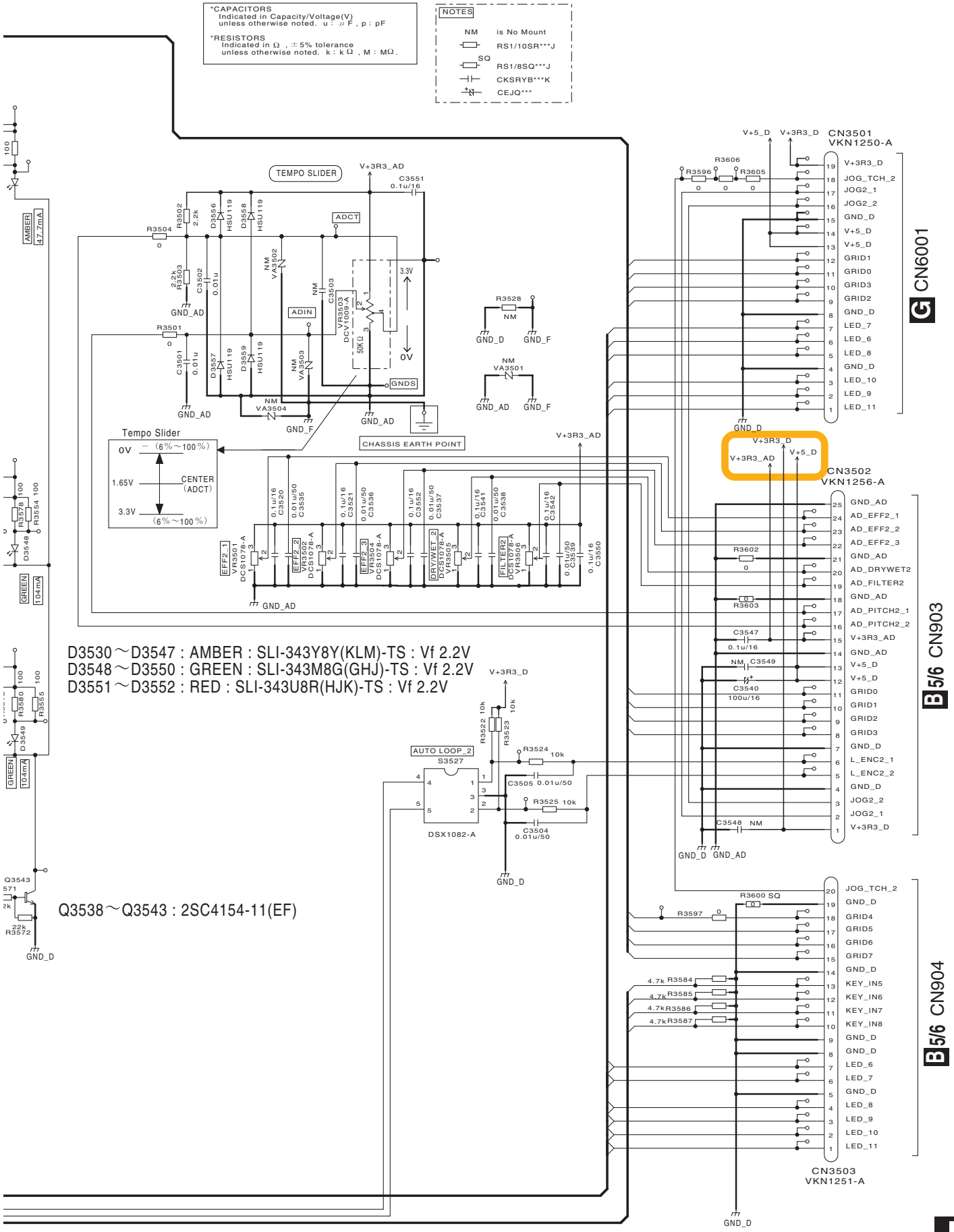
*CAPACITORS
Indicated in Capacity/Voltage(V)
unless otherwise noted. u : μF , p : pF
*RESISTORS
Indicated in Ω , ±5% tolerance
unless otherwise noted. k : kΩ , M : MΩ .
NOTES
NM is No Mount
RS1/10SR***J
SQ RS1/8SQ***J
CKSRYB***K
CEJQ***
TEMPO SLIDER
V+3R3_AD
C3551 0.1u/16
ADCT
ADIN
GNDS
3.3V
0V
50KΩ
GND_AD
GND_F
GND_D
CHASSIS EARTH POINT
Tempo Slider
0V
(6%～100%)
1.65V
CENTER (ADCT)
3.3V
(6%～100%)
CN3501 VKN1250-A
CN6001
CN3502 VKN1256-A
B 5/6 CN903
CN3503 VKN1251-A
B 5/6 CN904
D3530～D3547 : AMBER : SLI-343Y8Y(KLM)-TS : Vf 2.2V
D3548～D3550 : GREEN : SLI-343M8G(GHJ)-TS : Vf 2.2V
D3551～D3552 : RED : SLI-343U8R(HJK)-TS : Vf 2.2V
Q3538～Q3543 : 2SC4154-11(EF)
AUTO LOOP_2
S3527
DSX1082-A
V+3R3_D
V+5_D

10.12 DJMB ASSY

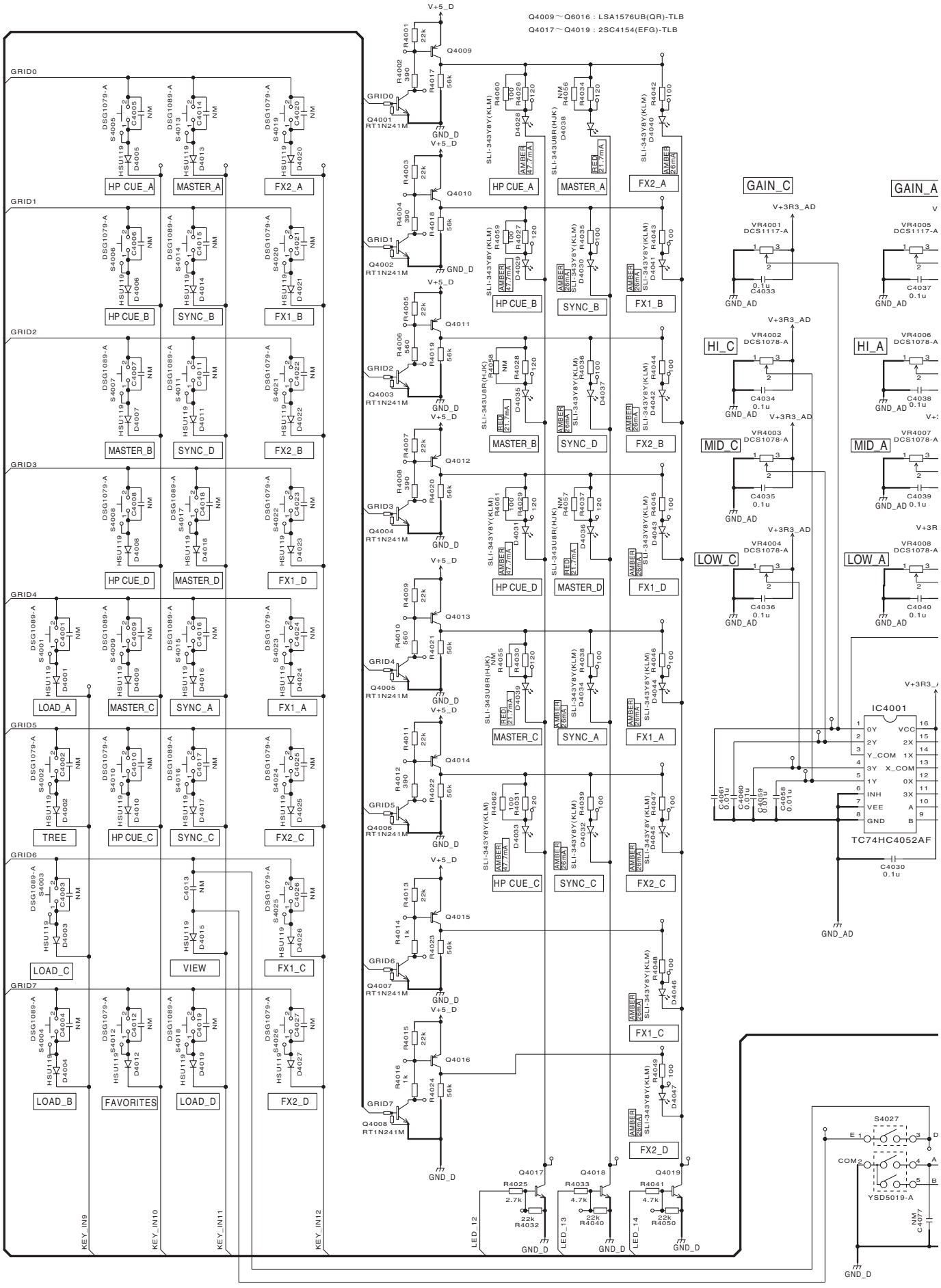

J DJMB ASSY (DWX3211)

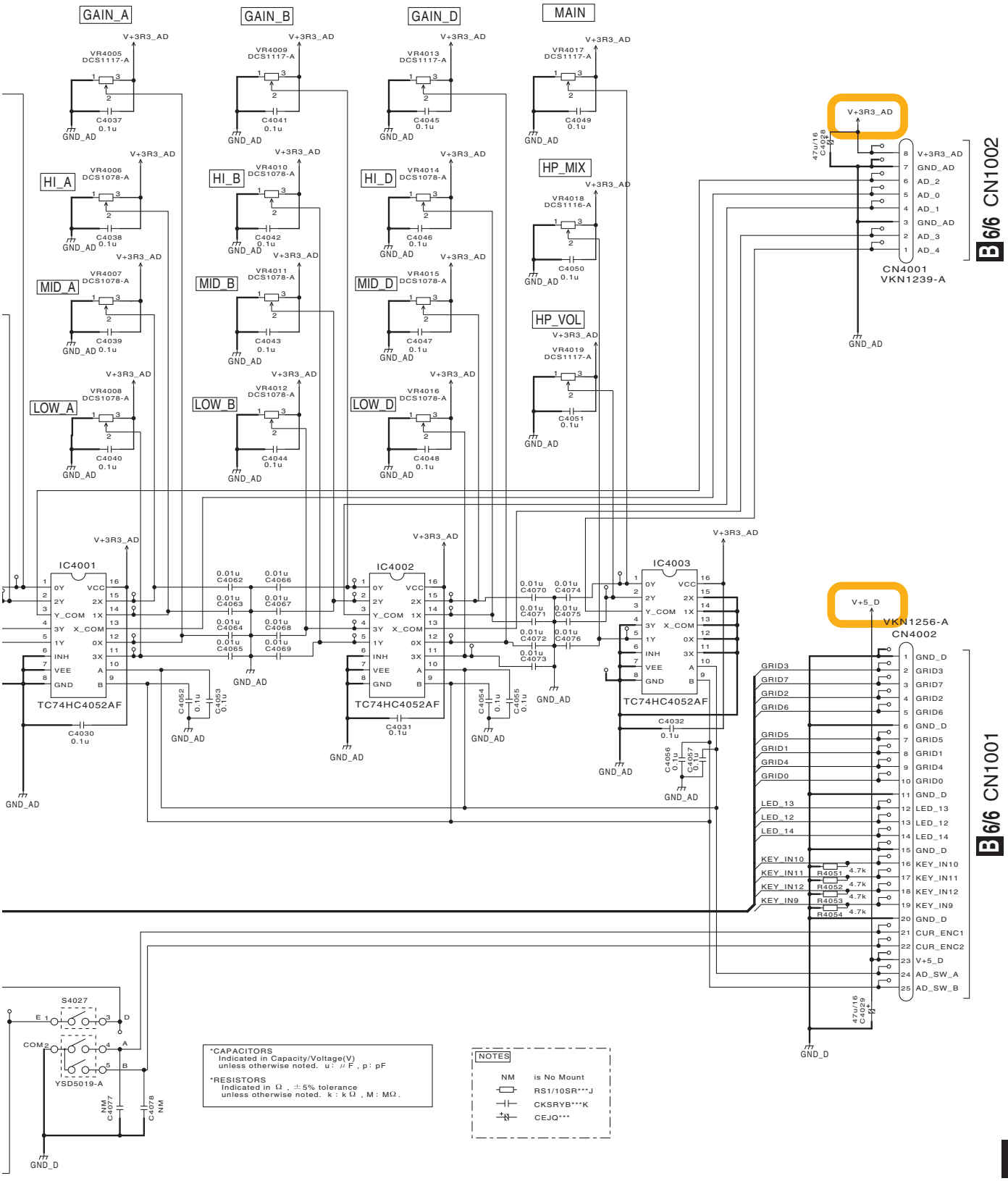

10.13 MICB ASSY

K MICB ASSY (DWX3215)

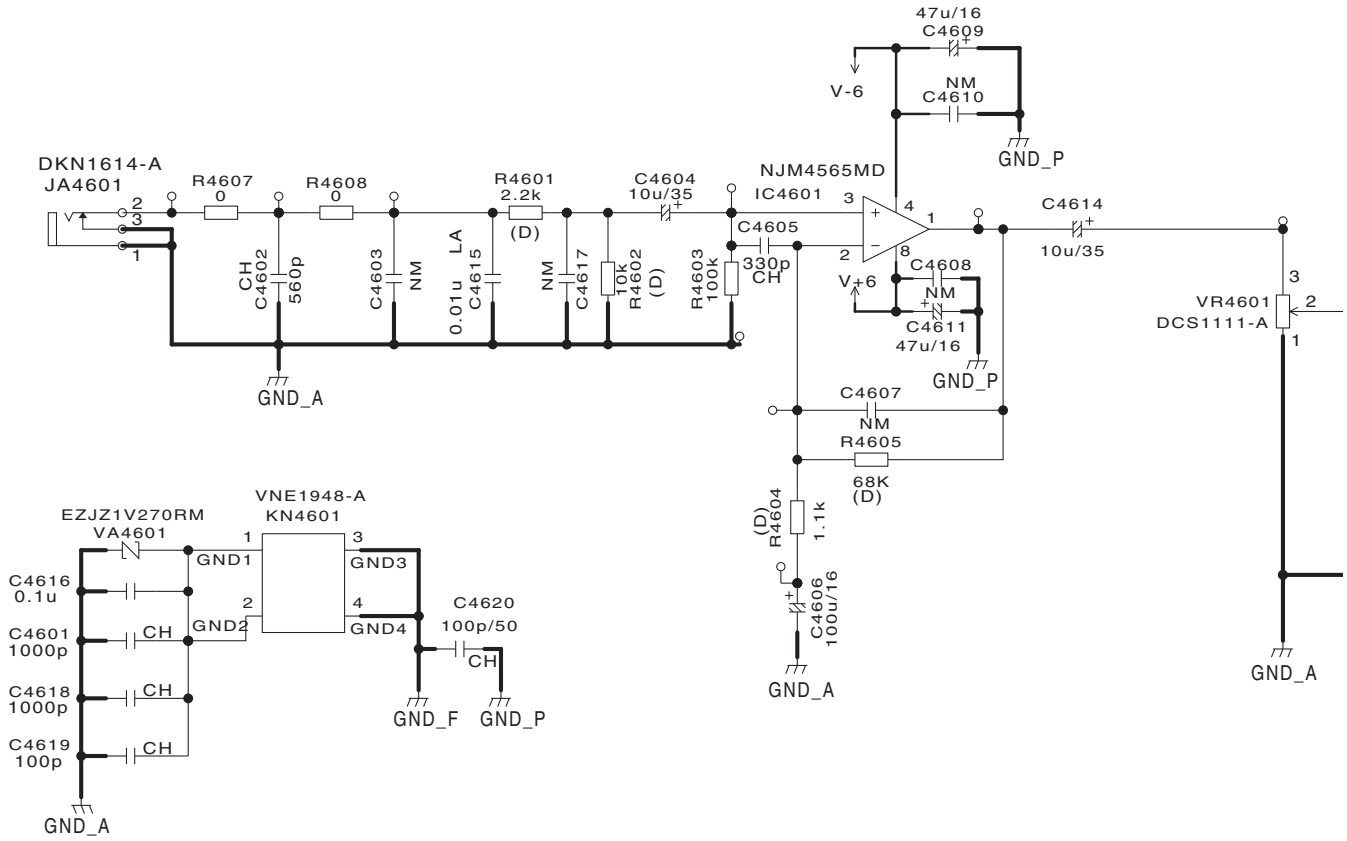

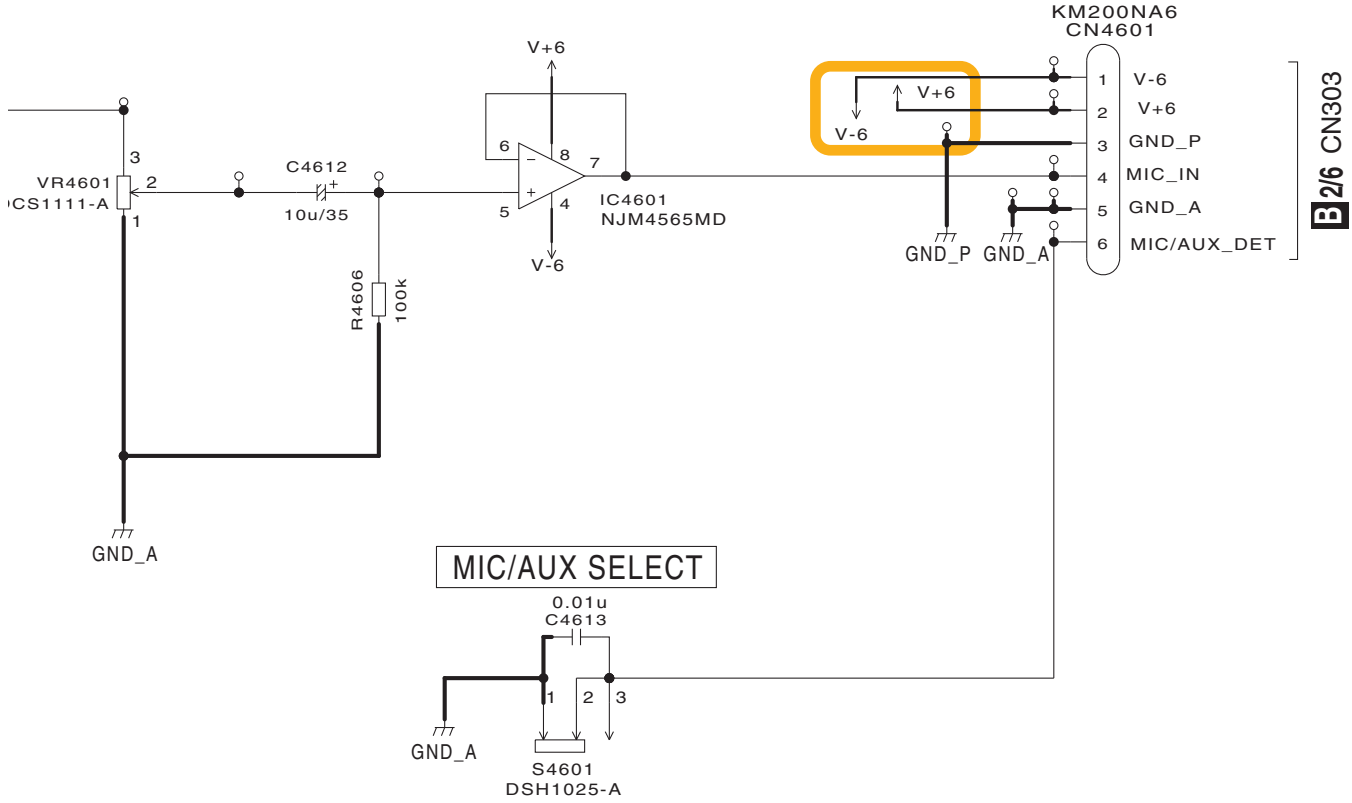

*CAPACITORS
Indicated in Capacity/Voltage(V)
unless otherwise noted. u : μF , p: pF

*RESISTORS
Indicated in Ω , ± 5% tolerance
unless otherwise noted. k : kΩ , M : MΩ.

NOTES

NM	is No Mount
	RS1/10SR***J
(D)	RS1/10SR****D
	CKSRYB***K
CH	CCSRCH***J
LA	CFTLA***J
	CEJQ***

10.14 CHFD, CRFD and HPJK ASSYS

L CHFD ASSY (DWX3212)

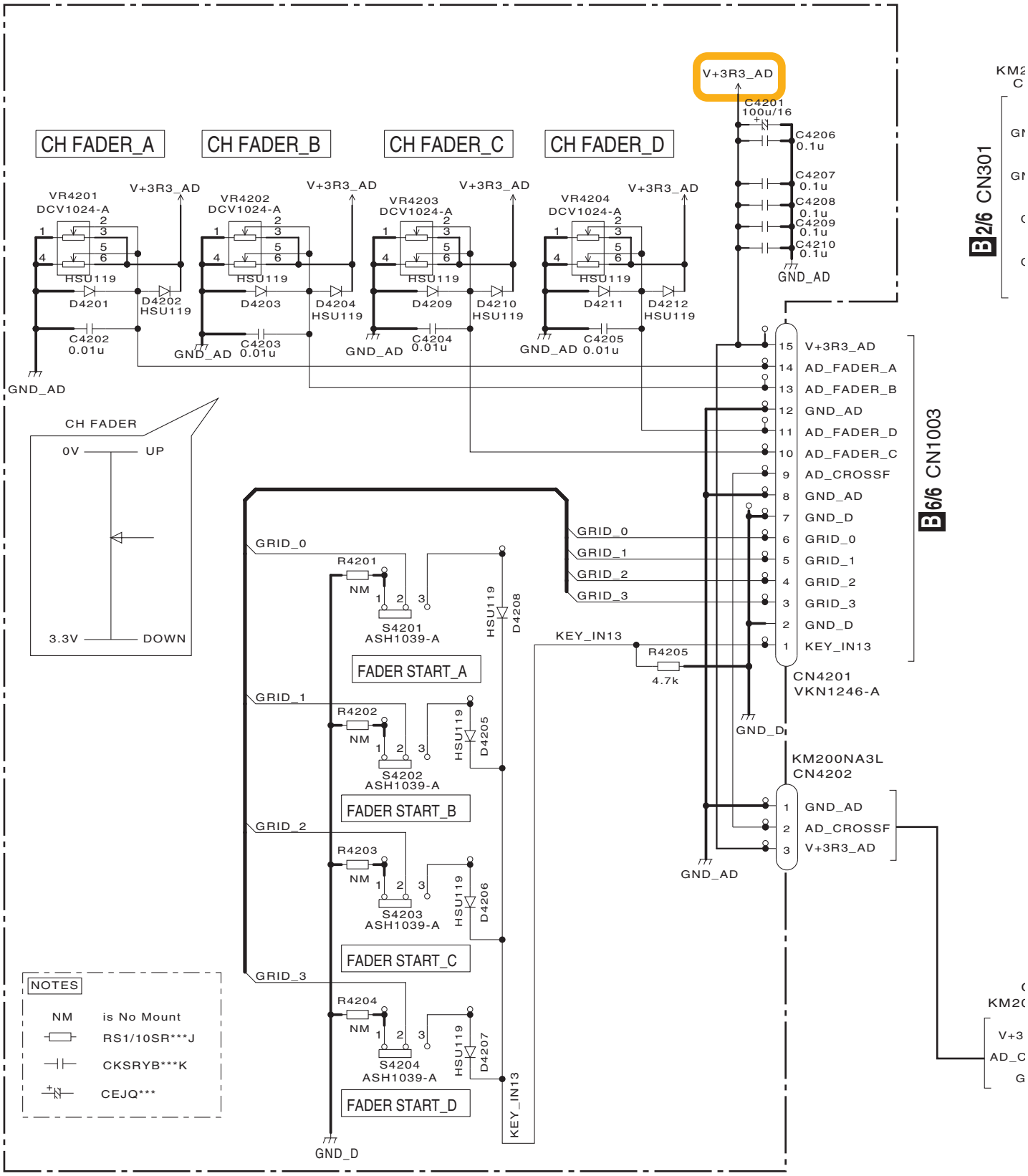

*CAPACITORS
Indicated in Capacity/Voltage(V)
unless otherwise noted. u : μF , p : pF

*RESISTORS
Indicated in Ω , ±5% tolerance
unless otherwise noted. k : kΩ , M : MΩ .

N HPJK ASSY (DWX3216)

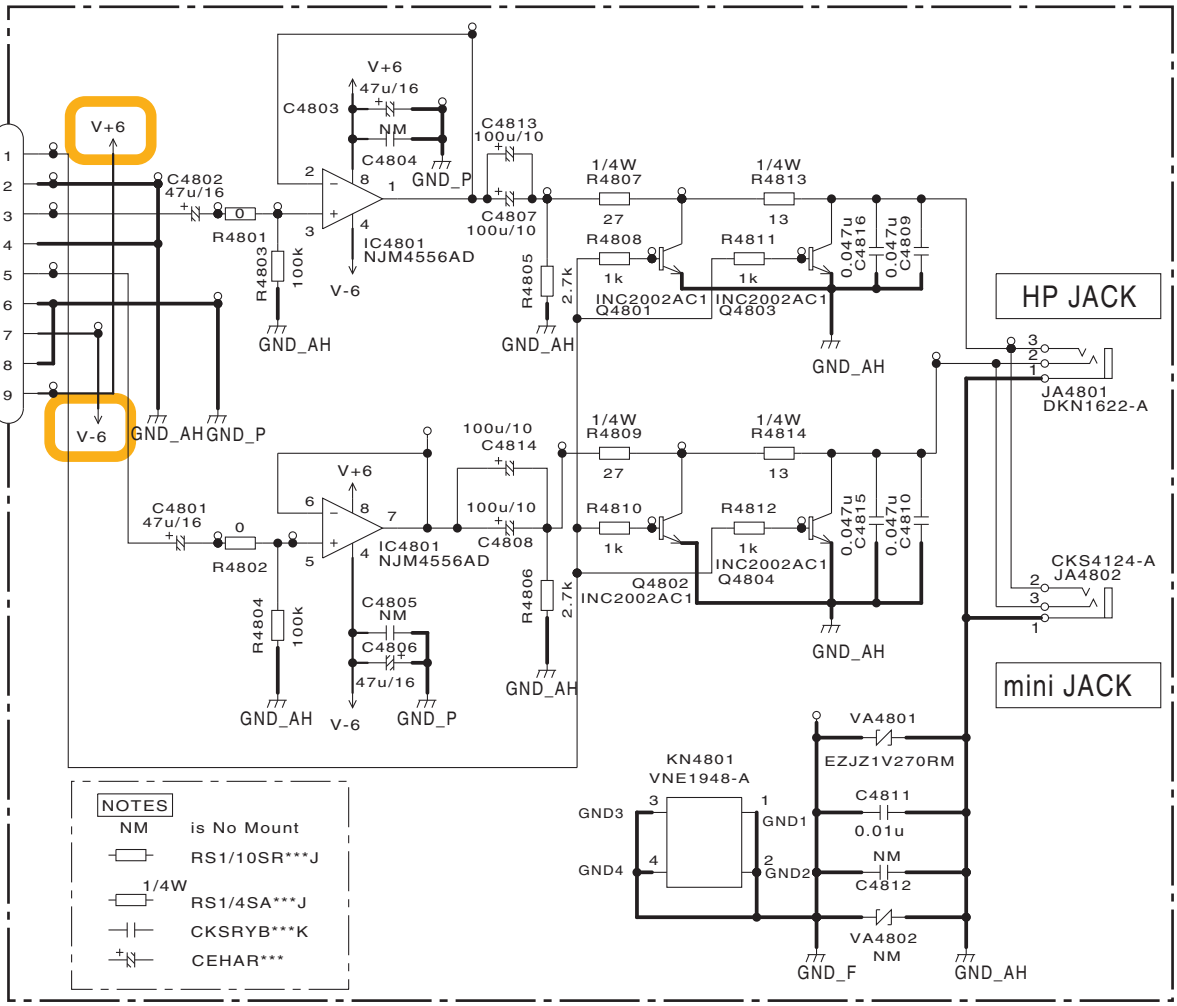

M CRFD ASSY (DWX3213)

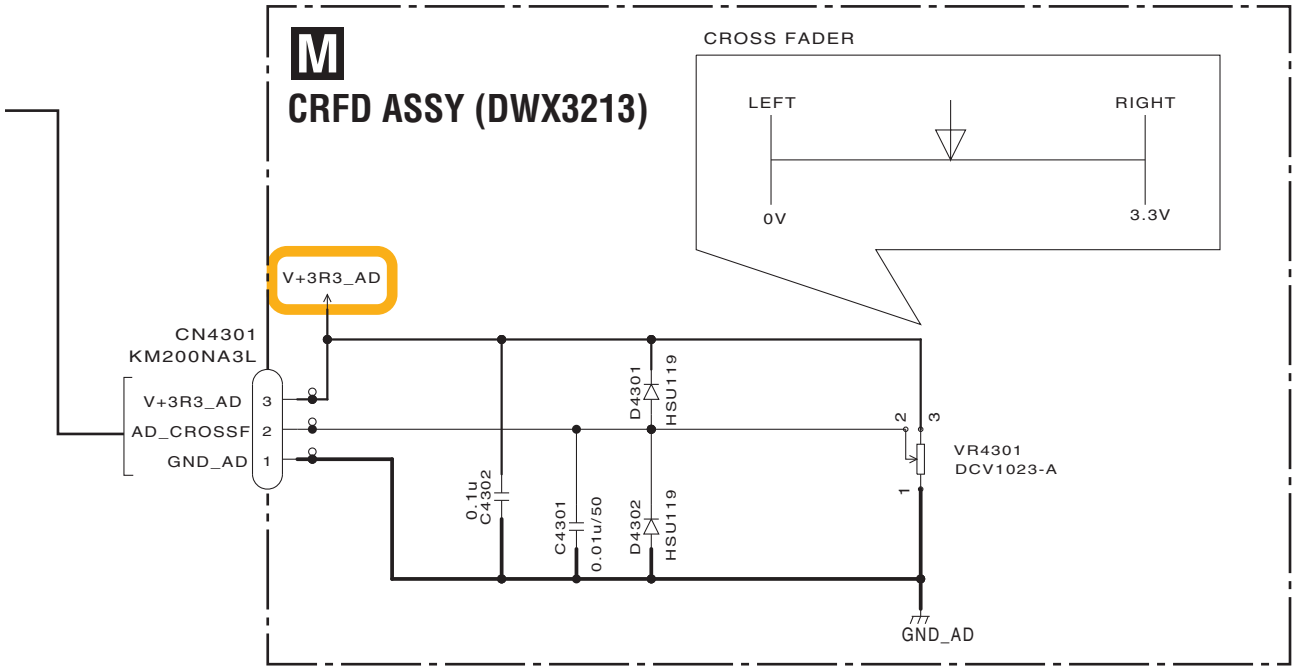

10.15 USBB ASSY

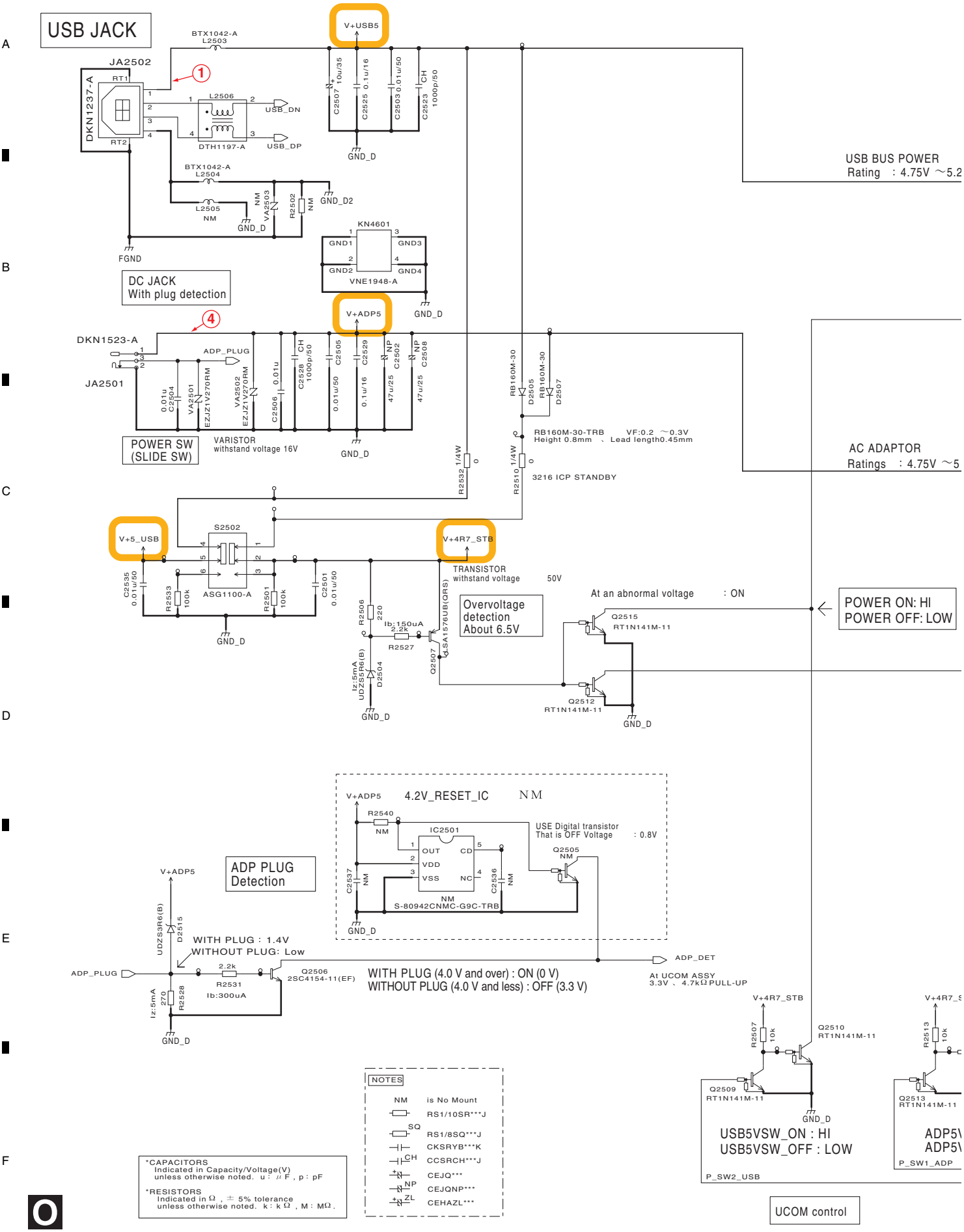

O USBB ASSY (DWX3222)

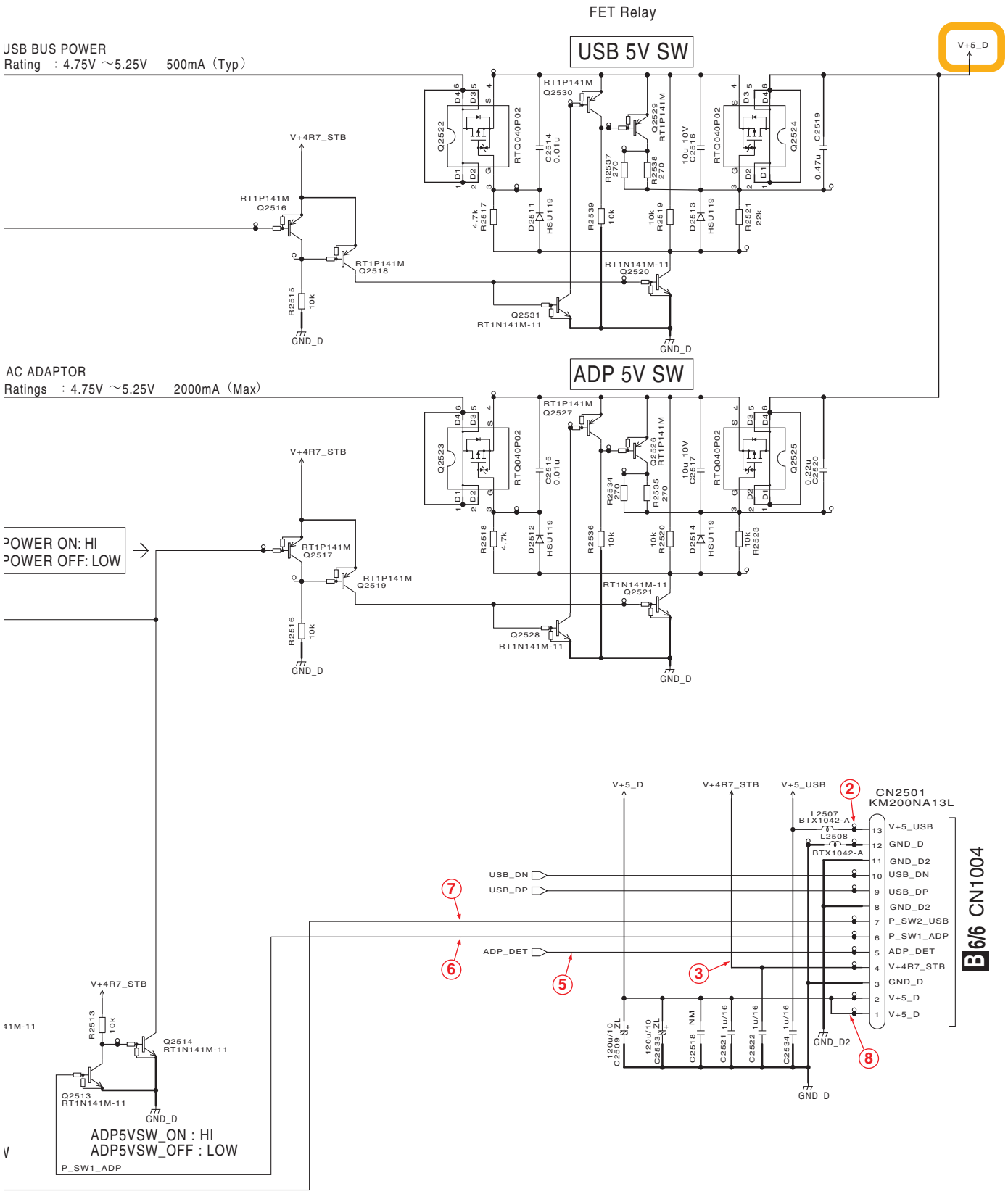

10.16 VOLTAGES

• **Power supply system**

Name	Normal Voltage Level	Relations Assy
V+USB5	4.75 to 5.25 V	USBB Assy
V+ADP5	4.75 to 5.25 V	USBB Assy
V+5_USB	4.75 to 5.25 V	USBB Assy UCOM Assy
V+3R3_USB	3.2 to 3.4 V	UCOM Assy
V+4R7_STB	5.15 to 4.5 V	USBB Assy UCOM Assy
V+3R3_UCOM	3.2 to 3.4 V	UCOM Assy
V+5_D	4.5 to 5.15 V	USBB Assy UCOM Assy CDJ1/2B Assy LEDB Assy DJMB Assy
V+3R3_D	3.2 to 3.4 V	UCOM Assy CDJ1/2B Assy CDCB1/2 Assy LEDB Assy TCHB Assy JOGB Assy
V+3R3_AD	3.2 to 3.4 V	UCOM Assy CDJ1/2B Assy DJMB Assy CHFD Assy CRFD Assy
V+6	5.8 to 6.2 V	UCOM Assy MICB Assy JACB Assy HPJK Assy
V-6	-5.8 to -6.2 V	UCOM Assy MICB Assy JACB Assy HPJK Assy
V+5_A	4.9 to 5.1 V	UCOM Assy

10.17 WAVEFORMS

Measuring equipment: Oscilloscope (Tektronix TDS3054)
Probe (Tektronix P6139A/P5050; Input Capacitance: 8 to 11.1 [pF], Input Impedance: 10 M[Ω])

The display voltage value of the oscilloscope is a reference value. The voltage value changes by the filter of the oscilloscope and a difference of the measuring function and a probe.

NOTE: The following waveforms were measured at the point of the corresponding balloon number in the schematic diagram.

O USBB ASSY

Power bus power
Mode: POWER ON (BUS POWER)

1. **JA2502 - pin 1 (V+USB5)**
   V: 5.0 V/div. H: 40 μS/div.
2. **CN2501 - pin 13 (V+5_USB)**
   V: 5.0 V/div. H: 40 μS/div.
3. **CN2501 - pin 4 (V+4R7_STB)**
   V: 5.0 V/div. H: 40 μS/div.
4. **CN2501 - pin 5 (ADP_DET)**
   V: 2.0 V/div. H: 40 μS/div.

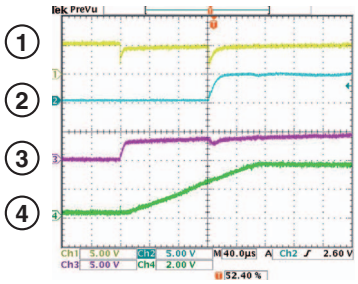

Power control
Mode: POWER ON (BUS POWER)

3. **CN2501 - pin 4 (V+4R7_STB)**
   V: 5.0 V/div. H: 100 mS/div.
6. **CN2501 - pin 6 (P_SW1_ADP)**
   V: 5.0 V/div. H: 100 mS/div.
7. **CN2501 - pin 7 (P_SW2_USB)**
   V: 2.0 V/div. H: 100 mS/div.
8. **CN2501 - pin 1 (V+5D)**
   V: 5.0 V/div. H: 100 mS/div.

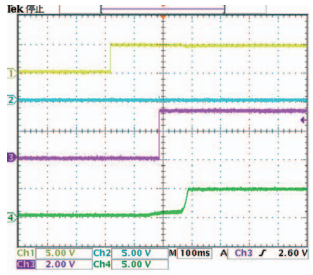

AC adapter
Mode: POWER ON (AC ADAPTER)

4. **JA2501 - pin 1 (V+ADP5)**
   V: 5.0 V/div. H: 100 μS/div.
2. **CN2501 - pin 13 (V+5_USB)**
   V: 5.0 V/div. H: 100 μS/div.
3. **CN2501 - pin 4 (V+4R7_STB)**
   V: 5.0 V/div. H: 100 μS/div.
5. **CN2501 - pin 5 (ADP_DET)**
   V: 2.0 V/div. H: 100 μS/div.

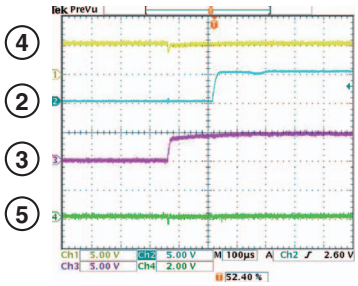

Power control
Mode: POWER ON (AC ADAPTER)

3. **CN2501 - pin 4 (V+4R7_STB)**
   V: 5.0 V/div. H: 100 mS/div.
6. **CN2501 - pin 6 (P_SW1_ADP)**
   V: 5.0 V/div. H: 100 mS/div.
7. **CN2501 - pin 7 (P_SW2_USB)**
   V: 2.0 V/div. H: 100 mS/div.
8. **CN2501 - pin 1 (V+5D)**
   V: 5.0 V/div. H: 100 mS/div.

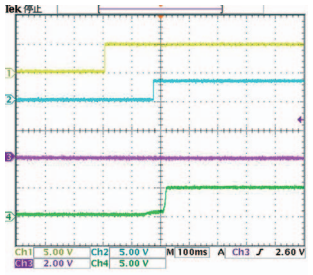

B UCOM ASSY

USB UCOM start up
Mode: POWER ON

9. **TP1049/CN1004 - pin 13 (V+5_USB)**
   V: 5.0 V/div. H: 100 mS/div.
10. **TP101/IC104 - pin 5 (V+3R3_USB)**
    V: 2.0 V/div. H: 100 mS/div.
11. **Q201 - pin 3 (USB_DET)**
    V: 2.0 V/div. H: 100 mS/div.
12. **IC202 - pin 10 (USB_RST)**
    V: 2.0 V/div. H: 100 mS/div.

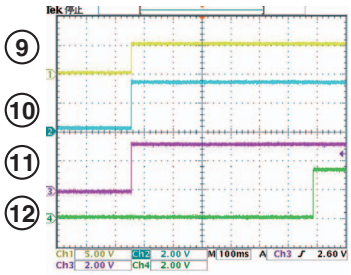

USB UCOM X'tal
Mode: POWER ON

13. **IC202 - pin 51 (XTALI)**
    V: 1.0 V/div. H: 20 mS/div.

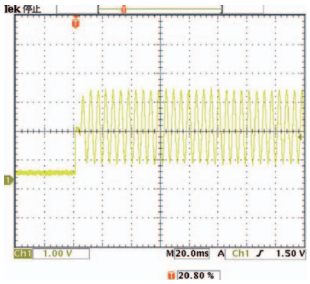

I2C USB UCOM EEPROM
Mode: POWER ON

12. **IC202 - pin 10 (USB_RST)**
    V: 2.0 V/div. H: 1 mS/div.
14. **TP210/IC201 - pin 6 (EEP_SCL)**
    V: 2.0 V/div. H: 1 mS/div.
15. **TP211/IC201 - pin 5 (EEP_SDA)**
    V: 2.0 V/div. H: 1 mS/div.

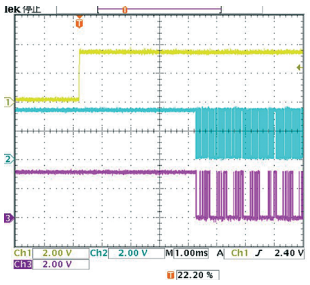

B UCOM ASSY

MAIN UCOM start up
Mode: POWER ON

(16) **TP1043/CN1004 - pin 4 (V+4R7_STB)**
V: 5.0 V/div. H: 4 mS/div.

(17) **TP102/IC105 - pin 5 (V+3R3_UCOM)**
V: 5.0 V/div. H: 4 mS/div.

(18) **IC106 - pin 1 (MAIN_RST)**
V: 5.0 V/div. H: 4 mS/div.

(19) **IC701 - pin 20 (XIN)**
V: 5.0 V/div. H: 4 mS/div.

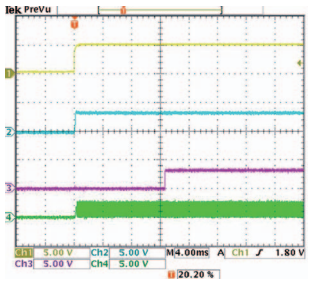

Abnormal voltage detection
Mode: POWER ON

(17) **TP102/IC105 - pin 5 (V+3R3_UCOM)**
V: 5.0 V/div. H: 40 mS/div.

(24) **TP106/IC102 - pin 5 (V+3R3_D)**
V: 5.0 V/div. H: 40 mS/div.

(20) **CN1004 - pin 1 (V+5_D)**
V: 5.0 V/div. H: 40 mS/div.

(25) **TP103/IC701 - pin 23 (FAULT_DET)**
V: 2.0 V/div. H: 40 mS/div.

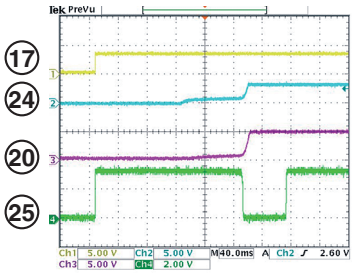

USB DP/DN (1)
Mode: IDLING

(29) **IC202 - pin 7 (USB_DP)**
V: 5.0 V/div. H: 400 µS/div.

(30) **IC202 - pin 8 (USB_DN)**
V: 5.0 V/div. H: 400 µS/div.

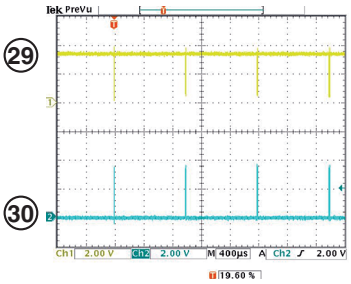

AUDIO power supply
Mode: POWER ON

(20) **CN1004 - pin 1 (V+5_D)**
V: 5.0 V/div. H: 20 mS/div.

(21) **CN501 - pin 2 (V+6)**
V: 5.0 V/div. H: 20 mS/div.

(22) **CN501 - pin 3 (V-6)**
V: 5.0 V/div. H: 20 mS/div.

(23) **TP104/IC103 - pin 5 (V+5_A)**
V: 5.0 V/div. H: 20 mS/div.

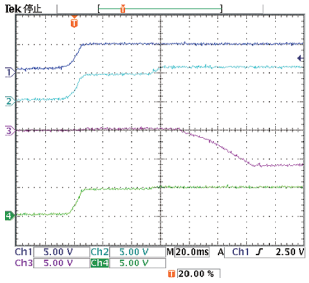

Abnormal voltage detection
Mode: POWER ON, TRIGGER: CH1, 2 V

(21) **CN501 - pin 2 (V+6)**
V: 5.0 V/div. H: 40 mS/div.

(23) **TP104/IC103 - pin 5 (V+5_A)**
V: 2.0 V/div. H: 40 mS/div.

(25) **TP103/IC701 - pin 23 (FAULT_DET)**
V: 2.0 V/div. H: 40 mS/div.

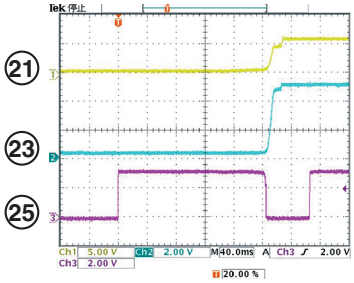

USB DP/DN (2)
Mode: IDLING

(29) **IC202 - pin 7 (USB_DP)**
V: 5.0 V/div. H: 400 nS/div.

(30) **IC202 - pin 8 (USB_DN)**
V: 5.0 V/div. H: 400 nS/div.

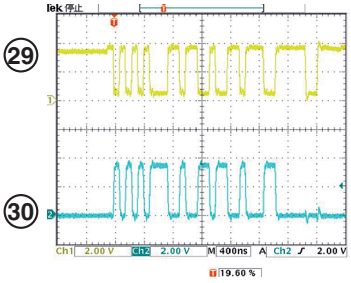

DIGITAL power supply
Mode: POWER ON

(20) **CN1004 - pin 1 (V+5_D)**
V: 2.0 V/div. H: 40 mS/div.

(24) **TP106/IC102 - pin 5 (V+3R3_D)**
V: 2.0 V/div. H: 40 mS/div.

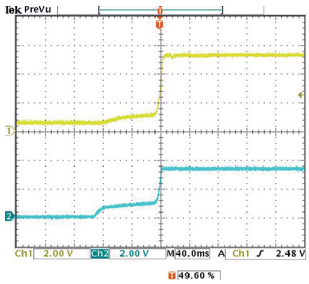

USB UCOM I2S
Mode: IDLING

(26) **IC202 - pin 44 (MCLK)**
V: 2.0 V/div. H: 20 µS/div.

(27) **IC202 - pin 34 (BCLK)**
V: 5.0 V/div. H: 20 µS/div.

(28) **IC202 - pin 35 (LRCK)**
V: 5.0 V/div. H: 20 µS/div.

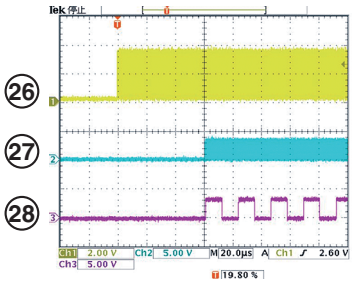

GRID control 1
Mode: IDLING

(31) **TP1010/CN1001 - pin 16 (GRID0)**
V: 5.0 V/div. H: 200 µS/div.

(32) **TP1008/CN1001 - pin 18 (GRID1)**
V: 5.0 V/div. H: 200 µS/div.

(33) **TP1005/CN1001 - pin 22 (GRID2)**
V: 5.0 V/div. H: 200 µS/div.

(34) **TP1003/CN1001 - pin 24 (GRID3)**
V: 5.0 V/div. H: 200 µS/div.

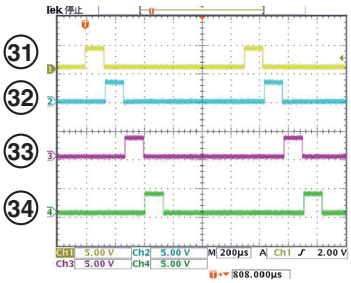

B UCOM ASSY

GRID control 2
Mode: IDLING

(35) **TP1009/CN1001 - pin 17 (GRID4)**
V: 5.0 V/div. H: 200 μS/div.

(36) **TP1007/CN1001 - pin 19 (GRID5)**
V: 5.0 V/div. H: 200 μS/div.

(37) **TP1006/CN1001 - pin 21 (GRID6)**
V: 5.0 V/div. H: 200 μS/div.

(38) **TP1004/CN1001 - pin 23 (GRID7)**
V: 5.0 V/div. H: 200 μS/div.

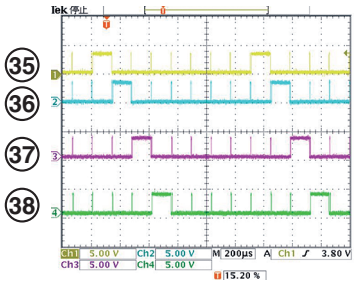

KEY operation 1 (PLAYER1 PLAY)
Mode: PLAY KEY

(37) **TP1006/CN1001 - pin 21 (GRID6)**
V: 2.0 V/div. H: 200 μS/div.

(44) **TP988/CN908 - pin 11 (KEY_IN4)**
V: 2.0 V/div. H: 200 μS/div.

(45) **IC1101 - pin 14 (KEY4)**
V: 2.0 V/div. H: 200 μS/div.

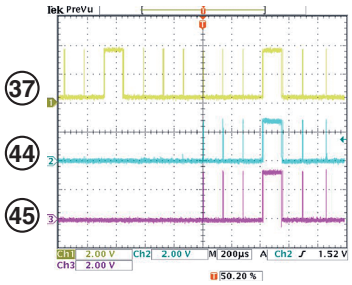

Volume operation 2 (MIXER GAIN A)(1)
Mode: MIXER GAIN A VOL operation

(46) **TP954/CN905 - pin 13 (V+3R3_AD)**
V: 2.0 V/div. H: 2.0 mS/div.

(48) **TP1018/CN1001 - pin 2 (AD_SW_A)**
V: 2.0 V/div. H: 2.0 mS/div.

(49) **TP1019/CN1001 - pin 1 (AD_SW_B)**
V: 2.0 V/div. H: 2.0 mS/div.

(50) **TP1024/CN1002 - pin 5 (AD_0)**
V: 2.0 V/div. H: 2.0 mS/div.

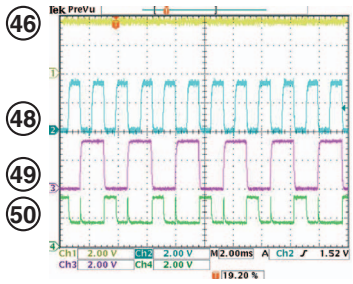

CDC IC control 1
Mode: IDLING

(39) **CN902 - pin 1 (CDC_INT1)**
V: 2.0 V/div. H: 2.0 mS/div.

(40) **CN902 - pin 2 (CDC_CS1)**
V: 2.0 V/div. H: 2.0 mS/div.

(41) **CN902 - pin 4 (CDC_SCLK)**
V: 2.0 V/div. H: 2.0 mS/div.

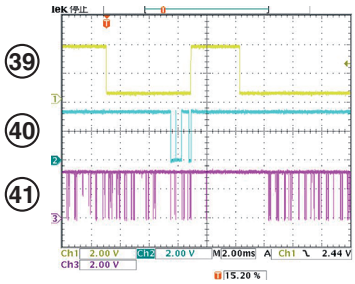

KEY operation 2 (PLAYER1 SHIFT)
Mode: SHIFT KEY

(32) **TP1008/CN1001 - pin 18 (GRID1)**
V: 2.0 V/div. H: 400 μS/div.

(44) **TP988/CN906 - pin 11 (KEY_IN4)**
V: 2.0 V/div. H: 400 μS/div.

(45) **IC1101 - pin 14 (KEY4)**
V: 2.0 V/div. H: 400 μS/div.

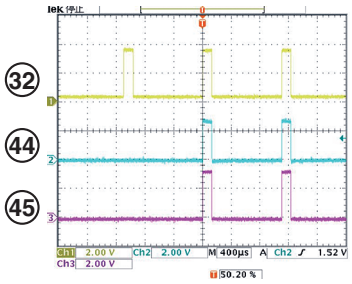

Volume operation 2 (MIXER GAIN A)(2)
Mode: MIXER GAIN A VOL operation

(46) **TP954/CN905 - pin 13 (V+3R3_AD)**
V: 2.0 V/div. H: 100 mS/div.

(48) **TP1018/CN1001 - pin 2 (AD_SW_A)**
V: 2.0 V/div. H: 100 mS/div.

(49) **TP1019/CN1001 - pin 1 (AD_SW_B)**
V: 2.0 V/div. H: 100 mS/div.

(50) **TP1024/CN1002 - pin 5 (AD_0)**
V: 2.0 V/div. H: 100 mS/div.

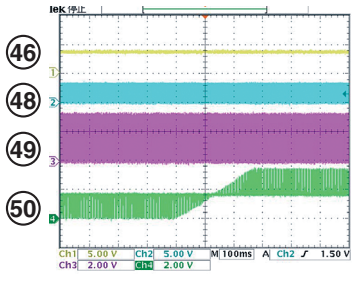

CDC IC control 2
Mode: IDLING

(41) **CN902 - pin 4 (CDC_SCLK)**
V: 2.0 V/div. H: 4.0 μS/div.

(42) **CN902 - pin 6 (CDC_DSI)**
V: 2.0 V/div. H: 4.0 μS/div.

(43) **CN902 - pin 7 (CDC_DSO)**
V: 2.0 V/div. H: 4.0 μS/div.

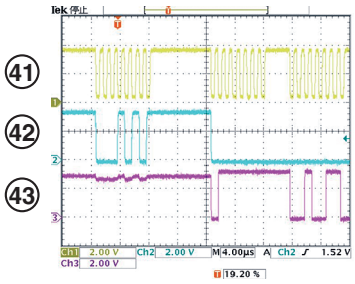

Volume operation 1 (PLAYER1 DRY/WET)
Mode: PLAYER1 DRY/WET VOL operation

(46) **TP954/CN905 - pin 13 (V+3R3_AD)**
V: 2.0 V/div. H: 200 mS/div.

(47) **TP959/CN905 - pin 21 (AD_DRYWET1)**
V: 1.0 V/div. H: 200 mS/div.

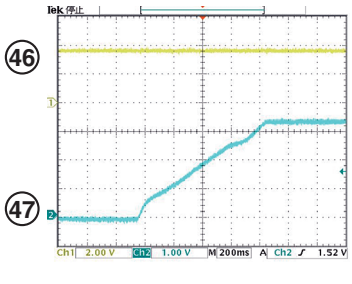

CH FADER operation (CH A)
Mode: MIXER CH A FADER operation

(46) **TP954/CN905 - pin 13 (V+3R3_AD)**
V: 2.0 V/div. H: 40 mS/div.

(51) **TP1031/CN1003 - pin 14 (AD_FADER_A)**
V: 2.0 V/div. H: 40 mS/div.

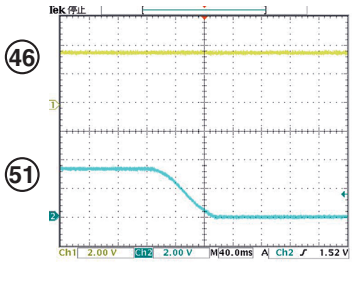

B UCOM ASSY

CROSS FADER operation
Mode: MIXER CROSS FADER operation

(46) **TP954/CN905 - pin 13 (V+3R3_AD)**
V: 2.0 V/div. H: 40 mS/div.

(52) **TP1035/CN1003 - pin 9 (AD_CROSSF)**
V: 2.0 V/div. H: 40 mS/div.

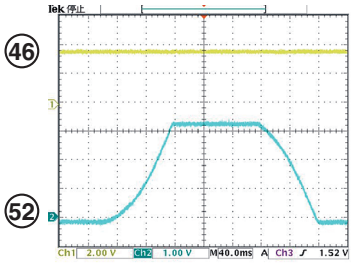

JOG rotation operation
Mode: JOG TOUCH & Release operation

(57) **TP106/IC102 - pin 5 (V+3R3_D)**
V: 2.0 V/div. H: 40 mS/div.

(58) **TP973/CN906 - pin 1 (JOG_TCH1)**
V: 1.0 V/div. H: 40 mS/div.

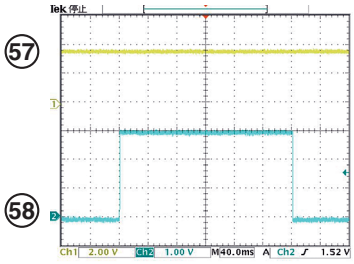

Output MUTE cancel
Mode: POWER ON

(63) **IC701 - pin 70 (A_MUTE)**
V: 2.0 V/div. H: 2.0 S/div.

(3) **CN2501 - pin 4 (V+4R7_STB)**
V: 2.0 V/div. H: 2.0 S/div.

(64) **TP505/CN501 - pin 1 (MUTE)**
V: 2.0 V/div. H: 2.0 S/div.

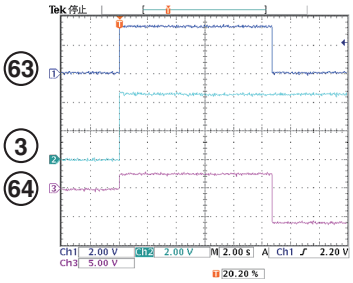

PITCH FADER operation (PLAYER1)
Mode: PLAYER1 PITCH FADER operation

(46) **TP954/CN905 - pin 13 (V+3R3_AD)**
V: 2.0 V/div. H: 40 mS/div.

(53) **TP964/CN905 - pin 14 (AD_PITCH2_1)**
V: 1.0 V/div. H: 40 mS/div.

(54) **TP965/CN905 - pin 12 (AD_PITCH2_2)**
V: 2.0 V/div. H: 40 mS/div.

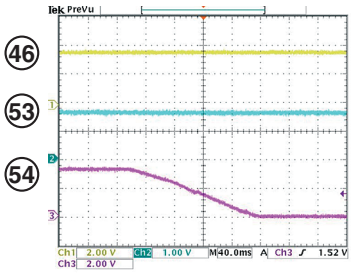

ADC reset cancel
Mode: POWER ON

(23) **TP104/IC103 - pin 5 (V+5_A)**
V: 5.0 V/div. H: 100 µS/div.

(60) **IC303 - pin 7 (VD)**
V: 5.0 V/div. H: 100 µS/div.

(26) **IC202 - pin 44 (MCLK)**
V: 2.0 V/div. H: 100 µS/div.

(61) **IC701 - pin 98 (ADC_RST)**
V: 5.0 V/div. H: 100 µS/div.

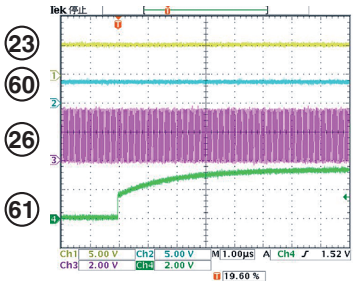

Input MUTE cancel
Mode: POWER ON

(65) **IC701 - pin 76 (AIN_MUTE)**
V: 2.0 V/div. H: 40 mS/div.

(23) **TP104/CN103 - pin 5 (V+5_A)**
V: 2.0 V/div. H: 40 mS/div.

(66) **R523/R528 (ADC_MUTE)**
V: 2.0 V/div. H: 40 mS/div.

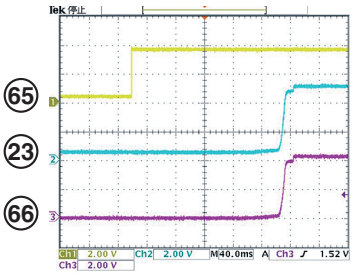

ROTARY ENCODER(PLAYER) operation
Mode: PLAYER1 AUTO LOOP operation

(55) **TP957/CN905 - pin 25 (L_ENC1_1)**
V: 2.0 V/div. H: 20 mS/div.

(56) **TP958/CN905 - pin 24 (L_ENC1_2)**
V: 2.0 V/div. H: 20 mS/div.

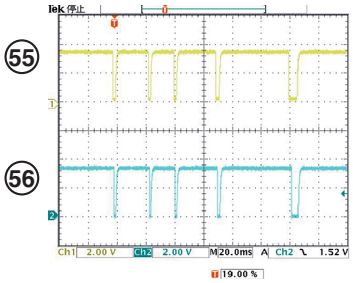

DAC reset cancel
Mode: POWER ON

(23) **TP104/IC103 - pin 5 (V+5_A)**
V: 5.0 V/div. H: 40 nS/div.

(26) **IC202 - pin 44 (MCLK)**
V: 5.0 V/div. H: 40 nS/div.

(62) **IC701 - pin 99 (DAC_RST)**
V: 2.0 V/div. H: 40 nS/div.

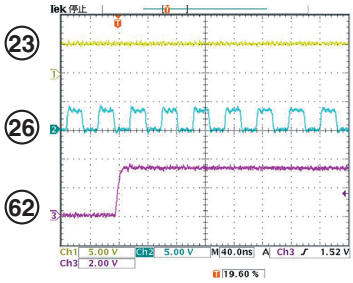

MIC
Mode: AUX 1 kHz input, at SW MIC selection

(67) **TP317/CN303 - pin 4 (MIC_IN)**
V: 1.0 V/div. H: 1.0 mS/div.

(68) **IC303 - pin 2 (AINL)**
V: 5.0 V/div. H: 1.0 mS/div.

(69) **TP316/CN303 - pin 6 (MIC_AUX_DET)**
V: 2.0 V/div. H: 1.0 mS/div.

(70) **IC701 - pin 71 (AUX_MIC_SEL)**
V: 2.0 V/div. H: 1.0 mS/div.

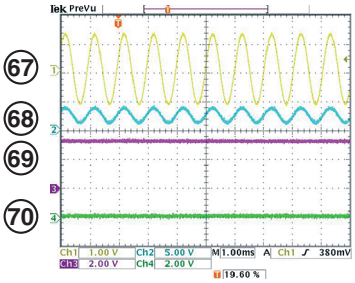

B UCOM ASSY

AUX
Mode: AUX 1 kHz input, at SW AUX selection

(71) **TP311/CN302 - pin 4 (AUX_R_IN)**
V: 500 mV/div. H: 1.0 mS/div.

(72) **IC303 - pin 1 (AINR)**
V: 5.0 V/div. H: 1.0 mS/div.

(69) **TP316/CN303 - pin 6 (MIC_AUX_DET)**
V: 2.0 V/div. H: 1.0 mS/div.

(70) **IC701 - pin 71 (AUX_MIC_SEL)**
V: 2.0 V/div. H: 1.0 mS/div.

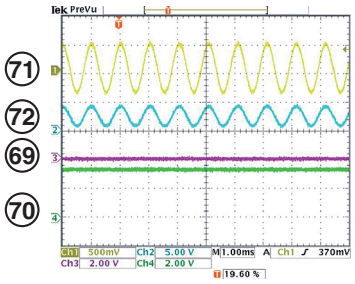

DAC I2S (1)
Mode: 1 kHz playback, at MASTER output

(74) **IC506 - pin 11 (AOUTL)**
V: 2.0 V/div. H: 1.0 µS/div.

(27) **IC202 - pin 34 (BCLK)**
V: 2.0 V/div. H: 1.0 µS/div.

(75) **IC202 - pin 36 (MASTER_DATA)**
V: 2.0 V/div. H: 1.0 µS/div.

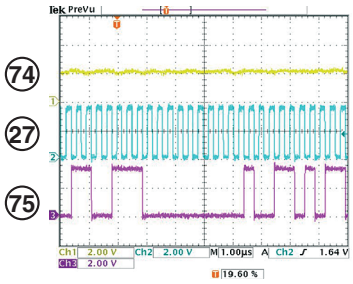

HEADPHONE
Mode: 1 kHz playback, at HEADPHONE output

(78) **TP306/CN301 - pin 3 (HP_L)**
V: 2.0 V/div. H: 400 µS/div.

(79) **TP305/CN301 - pin 5 (HP_R)**
V: 2.0 V/div. H: 400 µS/div.

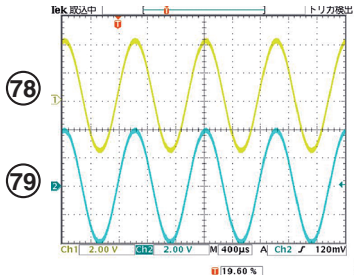

ADC I2S (1)
Mode: AUX 1 kHz input, at SW AUX selection

(68) **IC303 - pin 2 (AINL)**
V: 2.0 V/div. H: 1.0 µS/div.

(27) **IC202 - pin 34 (BCLK)**
V: 2.0 V/div. H: 1.0 µS/div.

(73) **TP302/IC202 - pin 39 (MIC_AUX_DATA)**
V: 2.0 V/div. H: 1.0 µS/div.

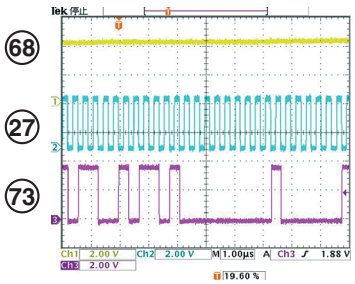

DAC I2S (2)
Mode: 1 kHz playback, at MASTER output

(74) **IC506 - pin 11 (AOUTL)**
V: 2.0 V/div. H: 400 µS/div.

(27) **IC202 - pin 34 (BCLK)**
V: 2.0 V/div. H: 400 µS/div.

(75) **IC202 - pin 36 (MASTER_DATA)**
V: 2.0 V/div. H: 400 µS/div.

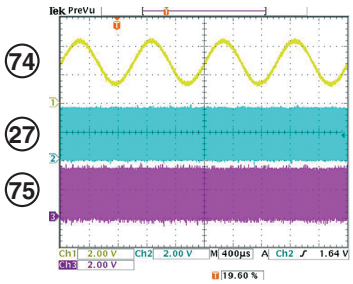

DAC control
Mode: POWER ON

(80) **IC304 - pin 6 (DAC_CS1)**
V: 2.0 V/div. H: 10 µS/div.

(81) **IC304 - pin 7 (DAC_CCLK)**
V: 2.0 V/div. H: 10 µS/div.

(82) **IC304 - pin 8 (DAC_CDTI)**
V: 2.0 V/div. H: 10 µS/div.

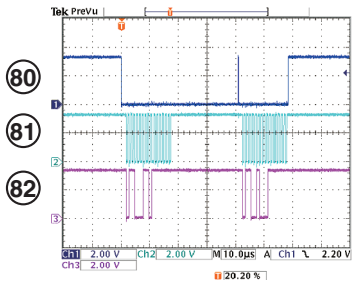

ADC I2S (2)
Mode: AUX 1 kHz input, at SW AUX selection

(68) **IC303 - pin 2 (AINL)**
V: 2.0 V/div. H: 400 µS/div.

(27) **IC202 - pin 34 (BCLK)**
V: 2.0 V/div. H: 400 µS/div.

(73) **TP302/IC202 - pin 39 (MIC_AUX_DATA)**
V: 2.0 V/div. H: 400 µS/div.

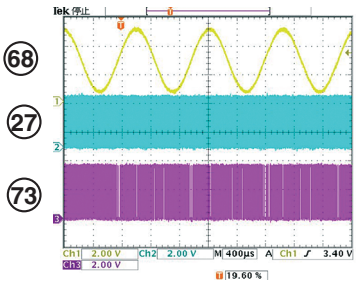

MASTER OUT
Mode: 1 kHz playback, at MASTER output

(76) **TP503/CN501 - pin 5 (MASTER_L)**
V: 2.0 V/div. H: 400 µS/div.

(77) **TP508/CN501 - pin 9 (MASTER_R)**
V: 2.0 V/div. H: 400 µS/div.

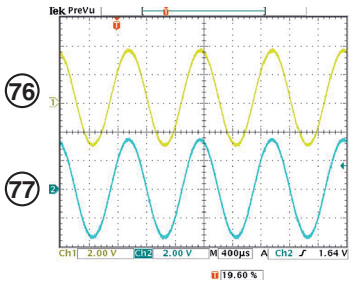

A JACB ASSY

MASTER OUT1
Mode: 1 kHz playback, at MASTER output

(83) **TP503/CN501 - pin 5 (MASTER_L)**
V: 5.0 V/div. H: 400 µS/div.

(84) **JA4402 - pin 3 (MASTER1_L+)**
V: 5.0 V/div. H: 400 µS/div.

(85) **JA4402 - pin 2 (MASTER1_L-)**
V: 5.0 V/div. H: 400 µS/div.

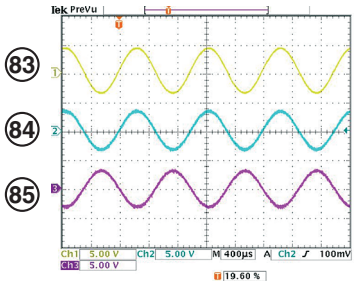

11. PCB CONNECTION DIAGRAM
11.1 JACB ASSY

SIDE A

SIDE A

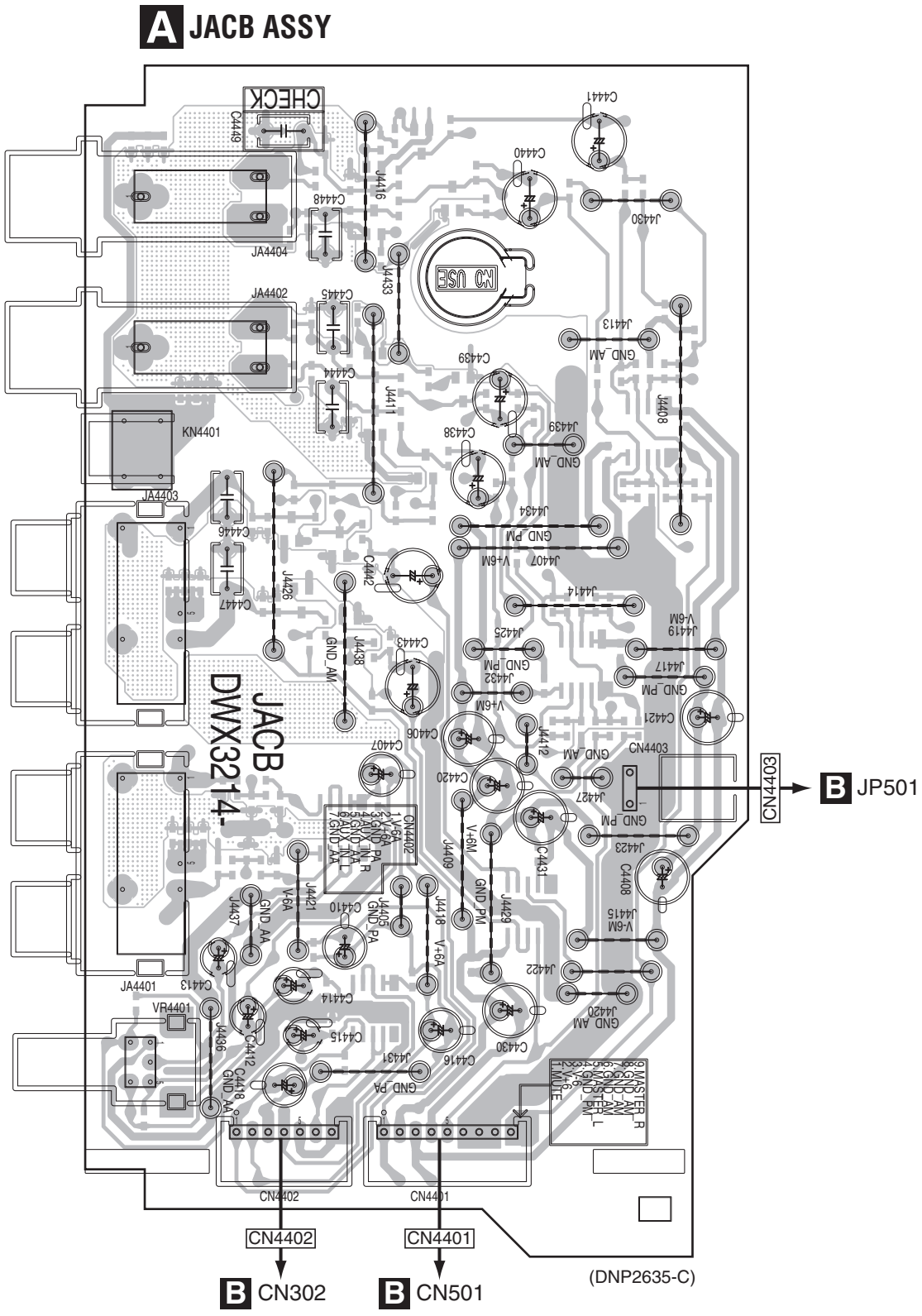

SIDE B

SIDE B

A JACB ASSY

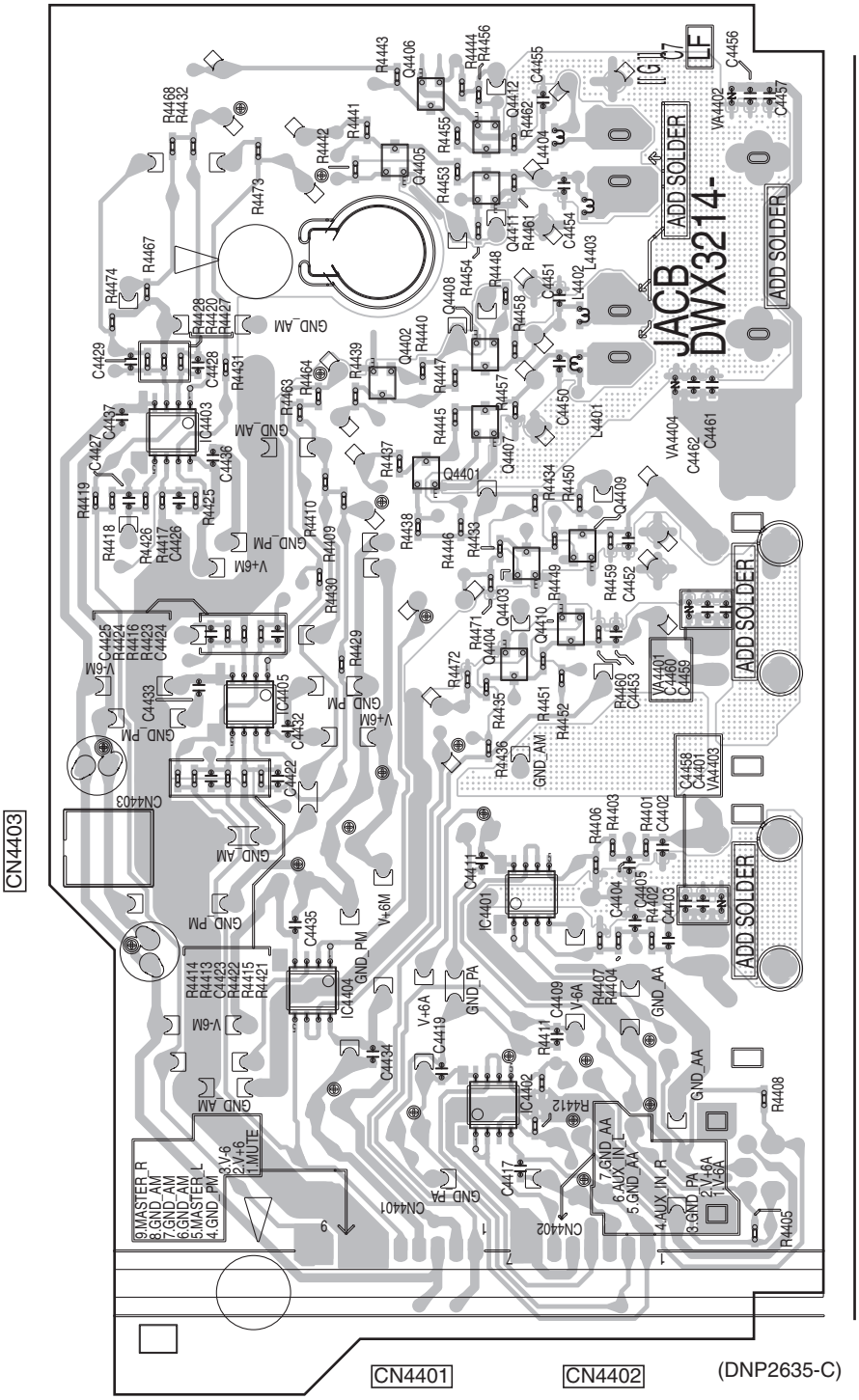

11.2 UCOM ASSY

SIDE A

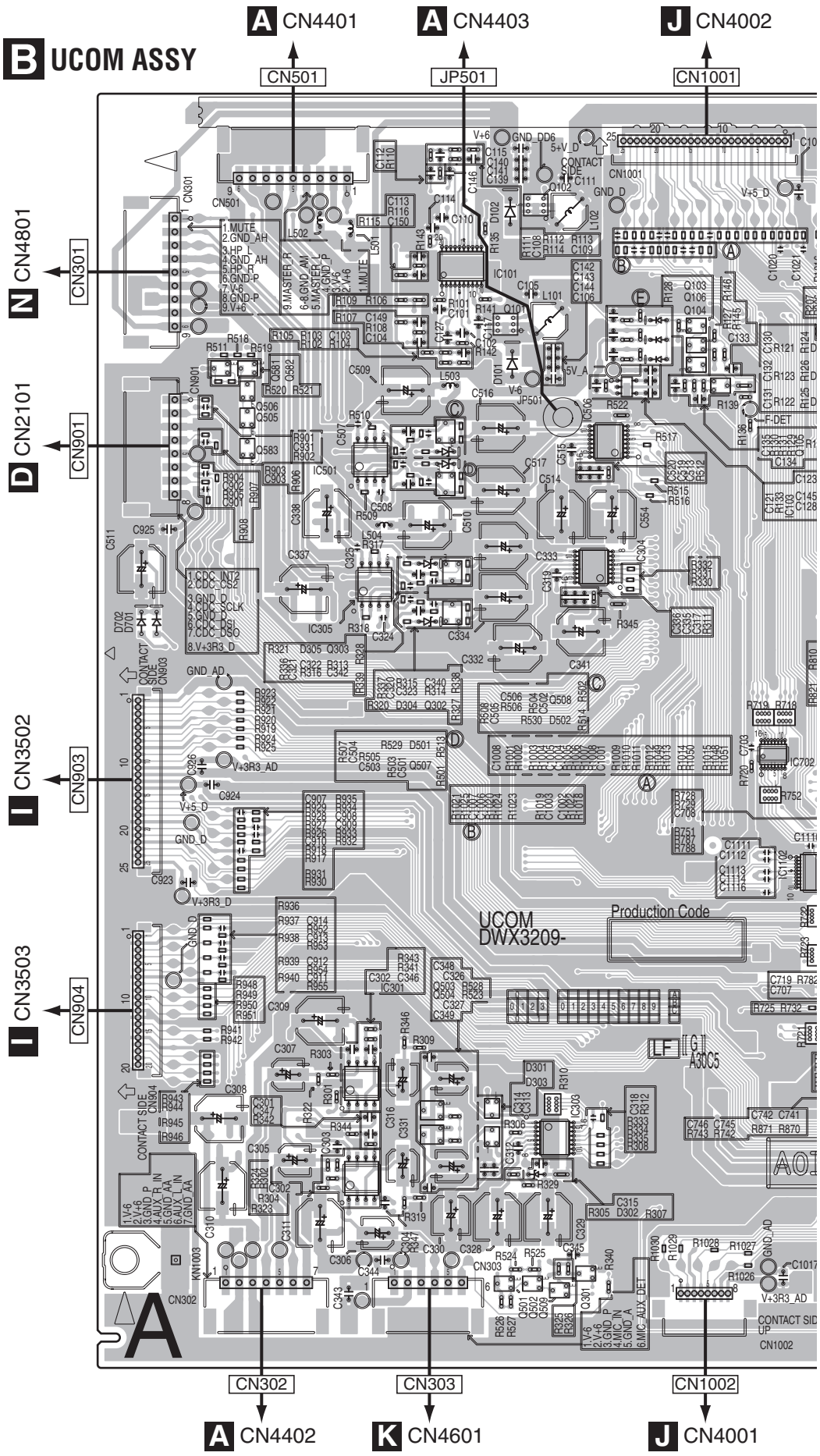

SIDE A

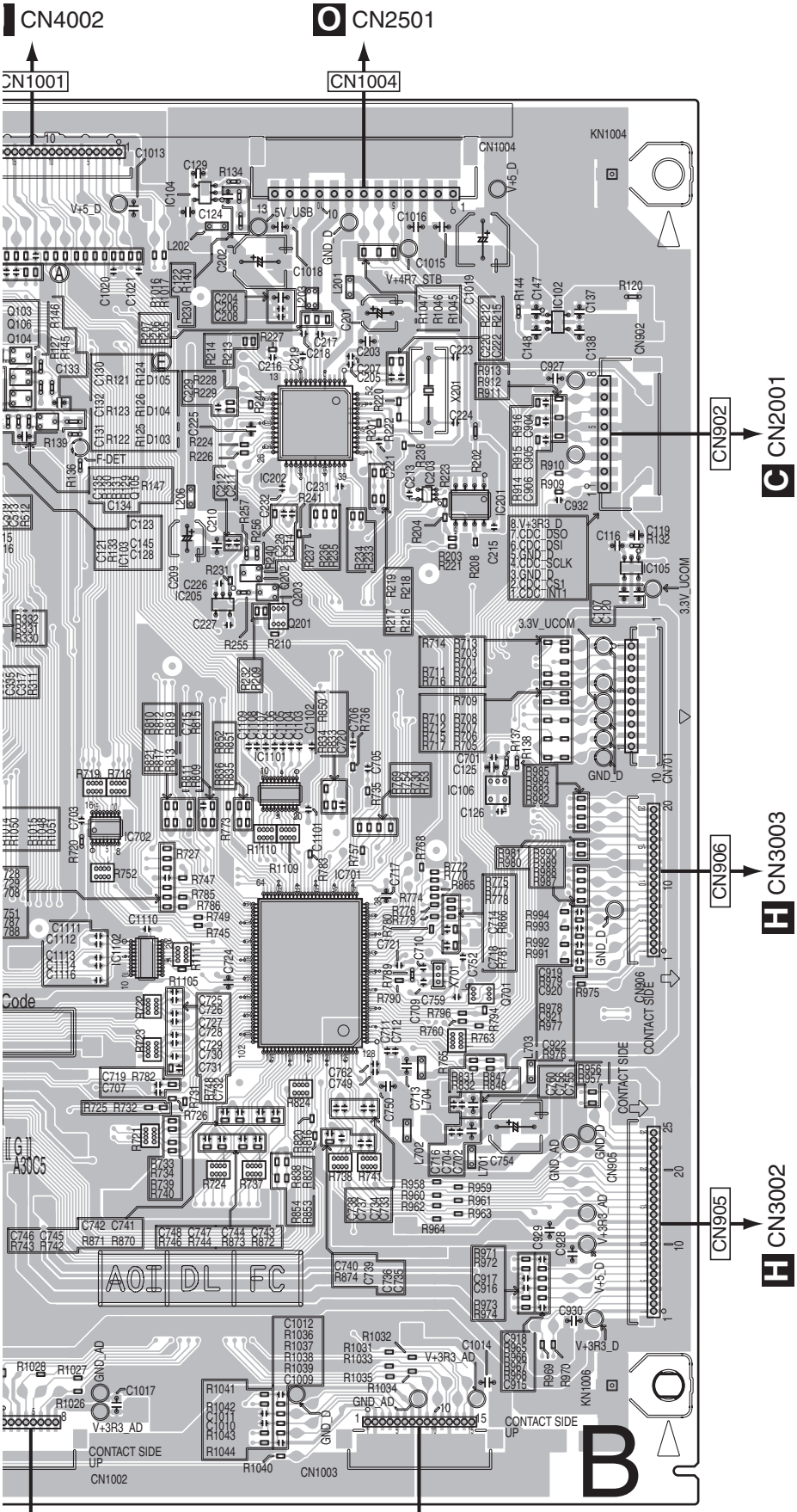

IC104
Q102
IC101
IC102
Q101 Q103
Q106
Q581 Q104
Q582 Q105 IC202
Q506 IC103
Q505
Q508
Q583 IC506 IC203
IC501 IC201
Q507
IC105
Q202
Q203
IC205 Q201
Q303 IC304
IC305
Q302
IC106
IC1101
IC702
IC701
IC1102
Q701
IC301
Q503
Q504 IC303
IC302
Q501 Q301
Q502 Q509

SIDE B

B UCOM ASSY

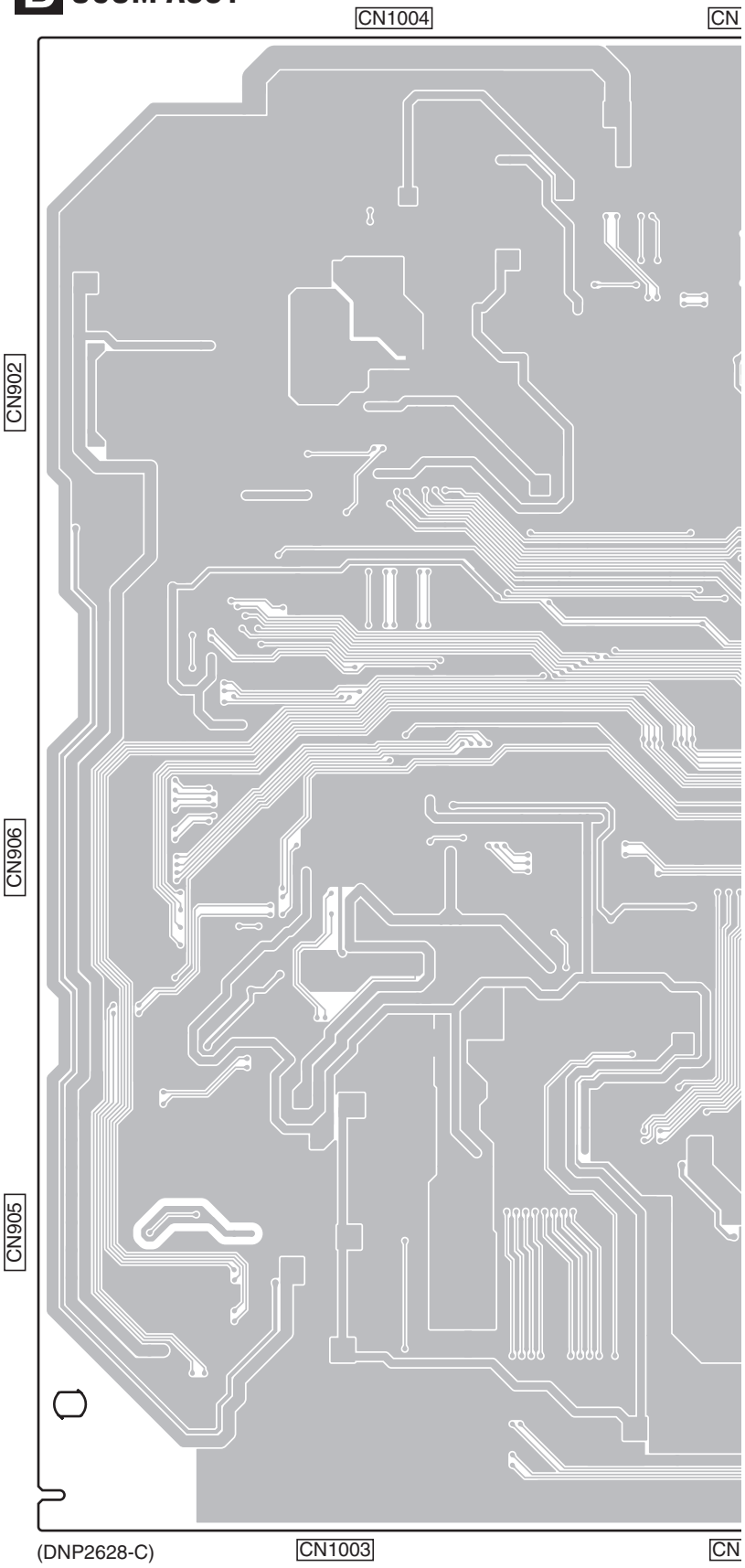

SIDE B

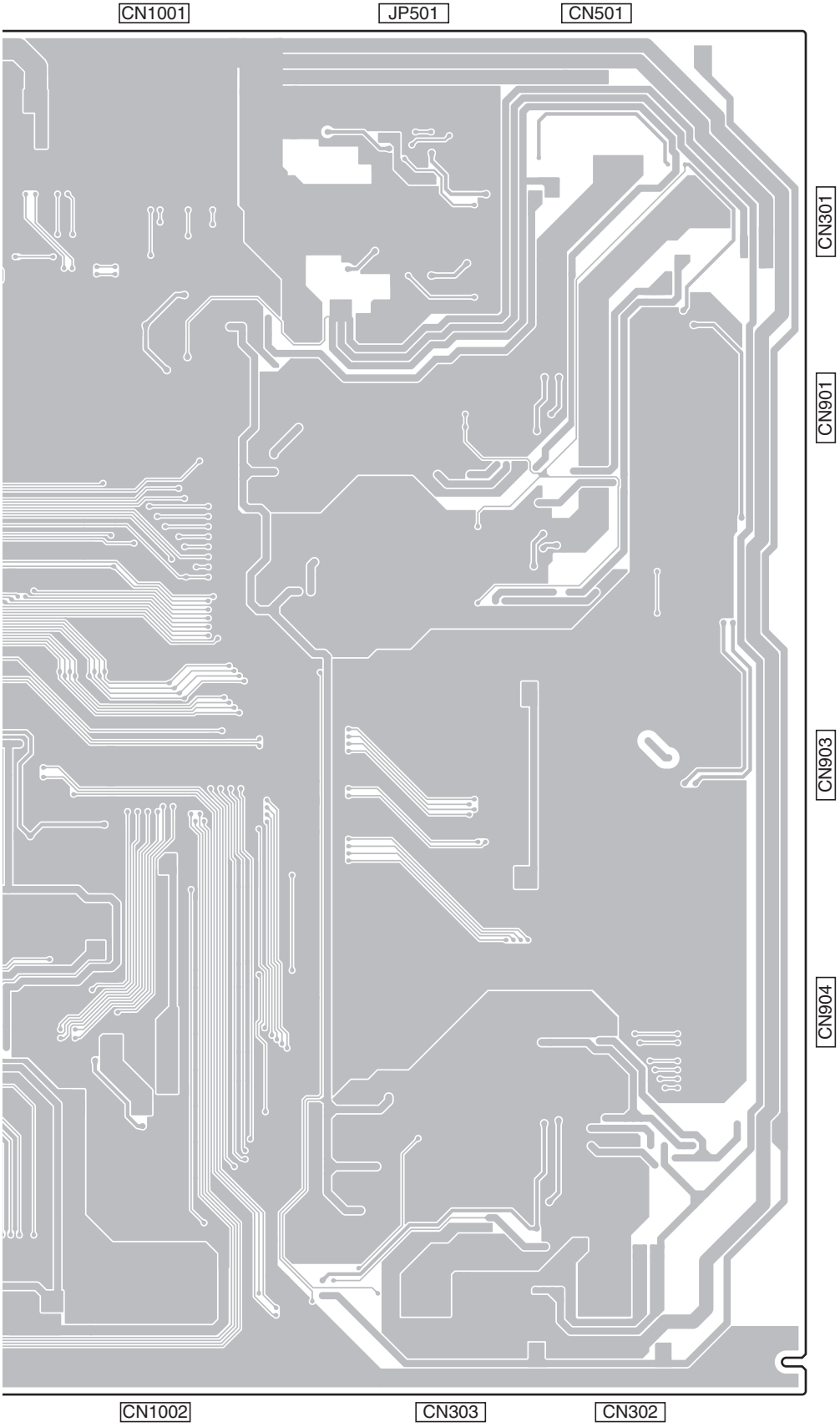
CN1001
JP501
CN501
CN301
CN901
CN903
CN904
CN1002
CN303
CN302

11.3 CDCB 1 ASSY

SIDE A

Either the CDCB 1 Assy or CDCB 2 Assy is assembled here.
The CDCB 1 Assy and CDCB 2 Assy are interchangeably used and handled similarly in their production management.

SIDE B

C CDCB 1 ASSY

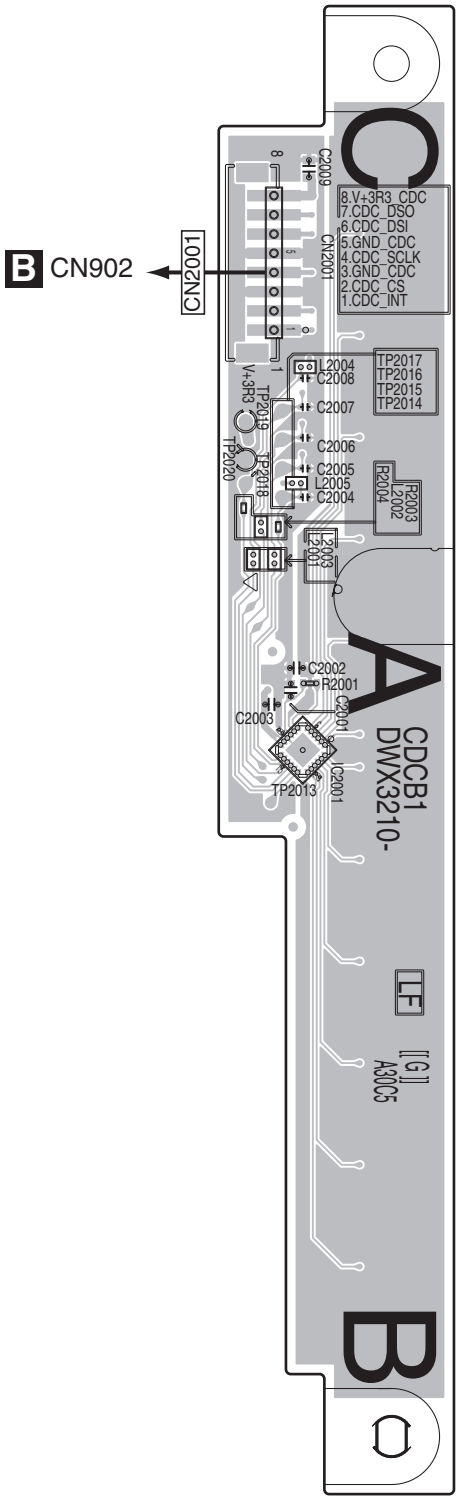

(DNP2628-C)

C CDCB 1 ASSY

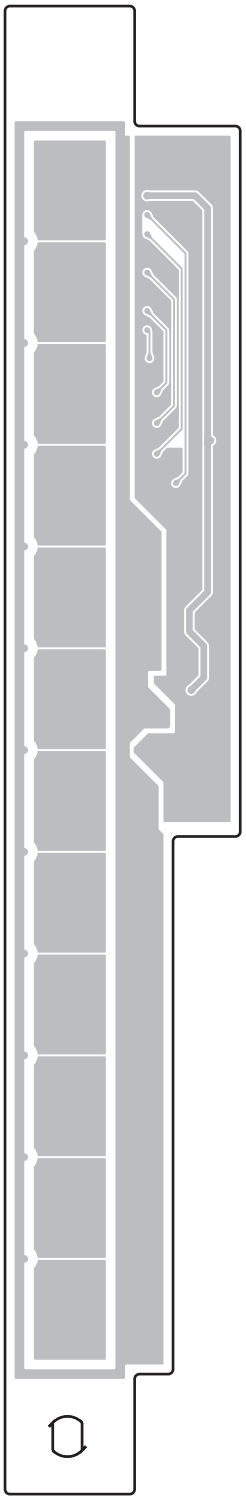

(DNP2628-C)

11.4 CDCB 2 ASSY

SIDE A

Either the CDCB 1 Assy or CDCB 2 Assy is assembled here.
The CDCB 1 Assy and CDCB 2 Assy are interchangeably used and handled similarly in their production management.

SIDE B

A B C D E F

D CDCB 2 ASSY

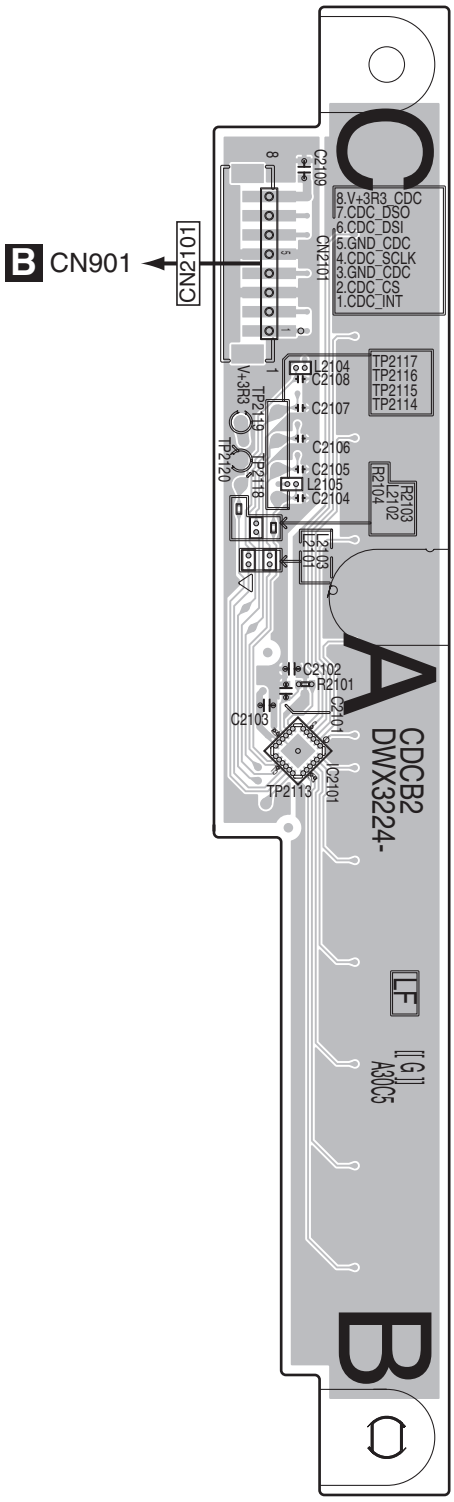

(DNP2628-C)

D CDCB 2 ASSY

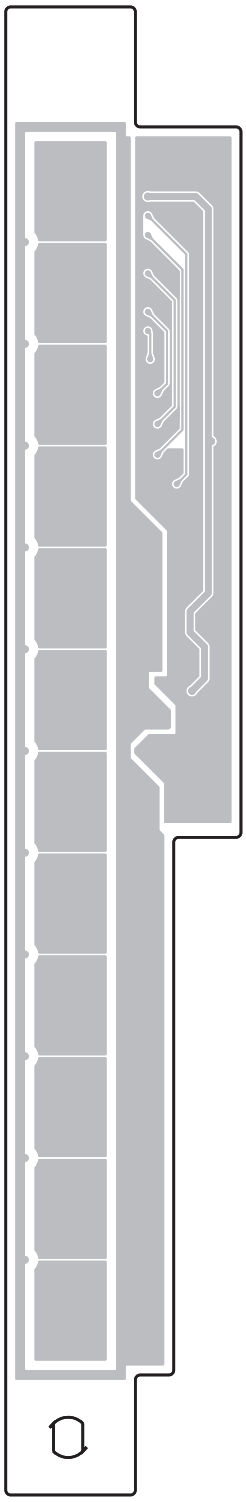

(DNP2628-C)

11.5 TCHB, JOGB and LEDB ASSYS

SIDE A

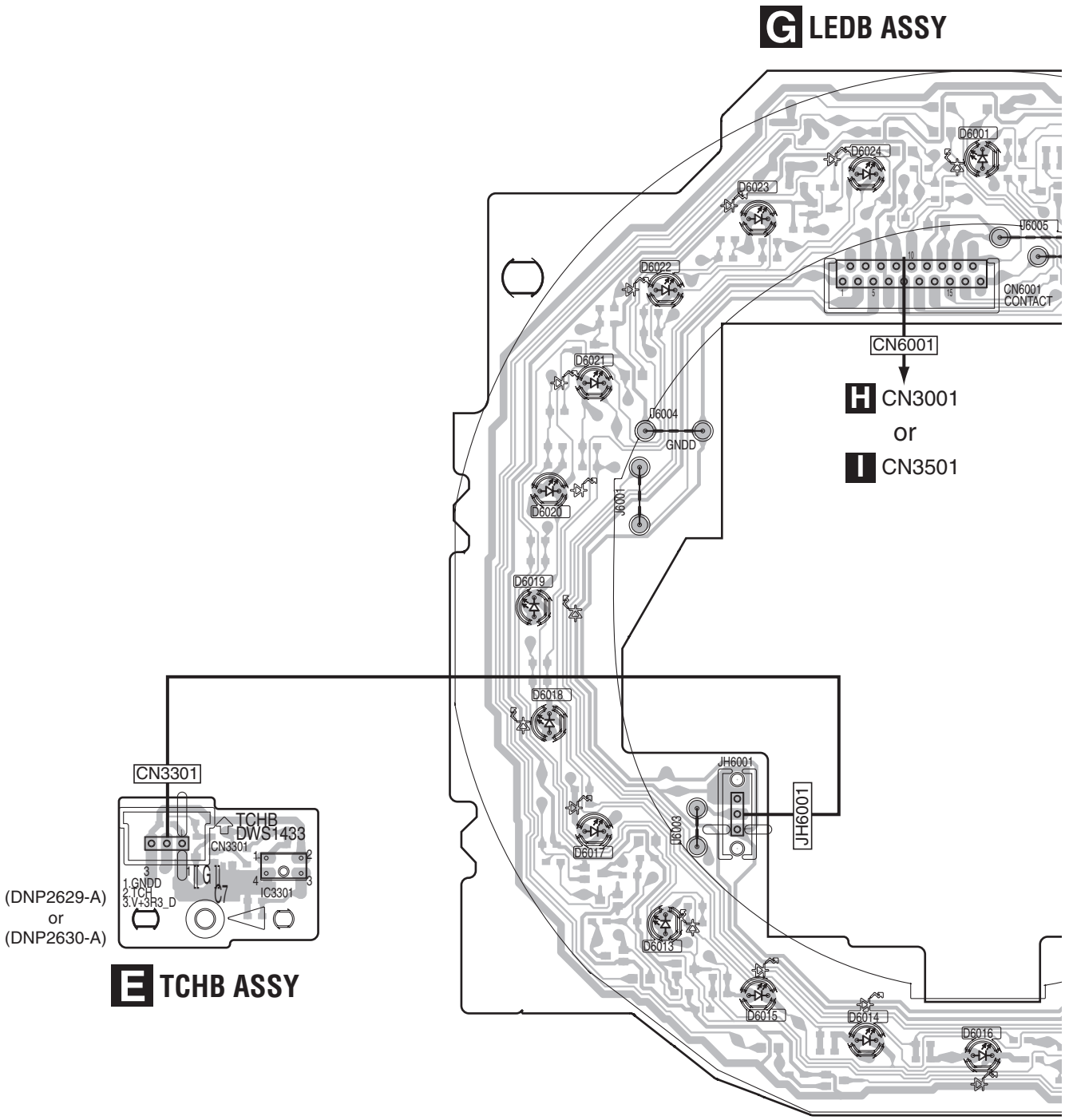

E G

SIDE A

A

B

C

D

E

F

SY

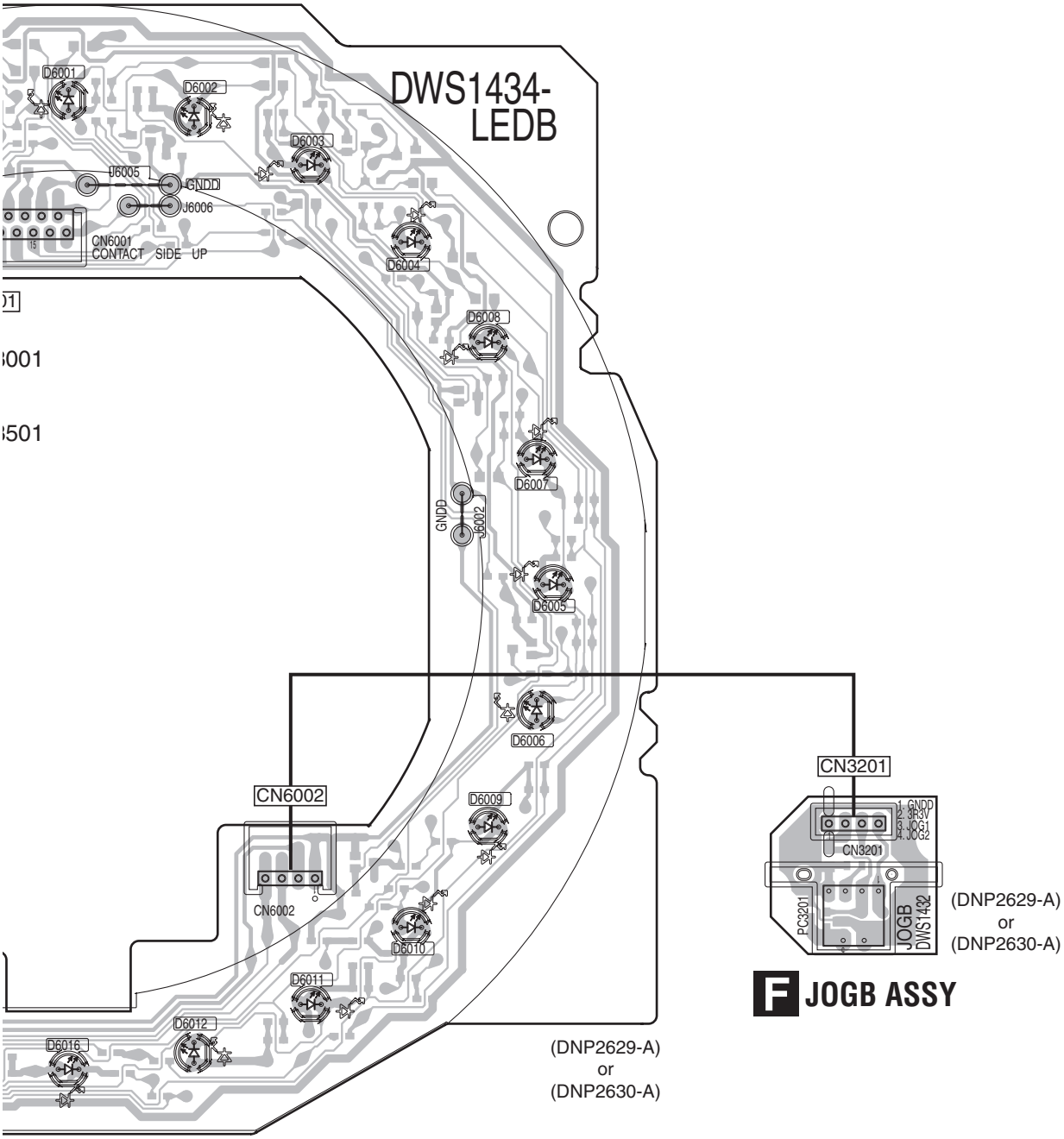

F JOGB ASSY

F G

SIDE B


G LEDB ASSY
CN6001
CN6002
CN3201
LEDB
DWS1434-
(DNP2629-A)
or
(DNP2630-A)
F JOGB ASSY
(DNP2629-A)
or
(DNP2630-A)

SIDE B

A

B

C

D

E

F

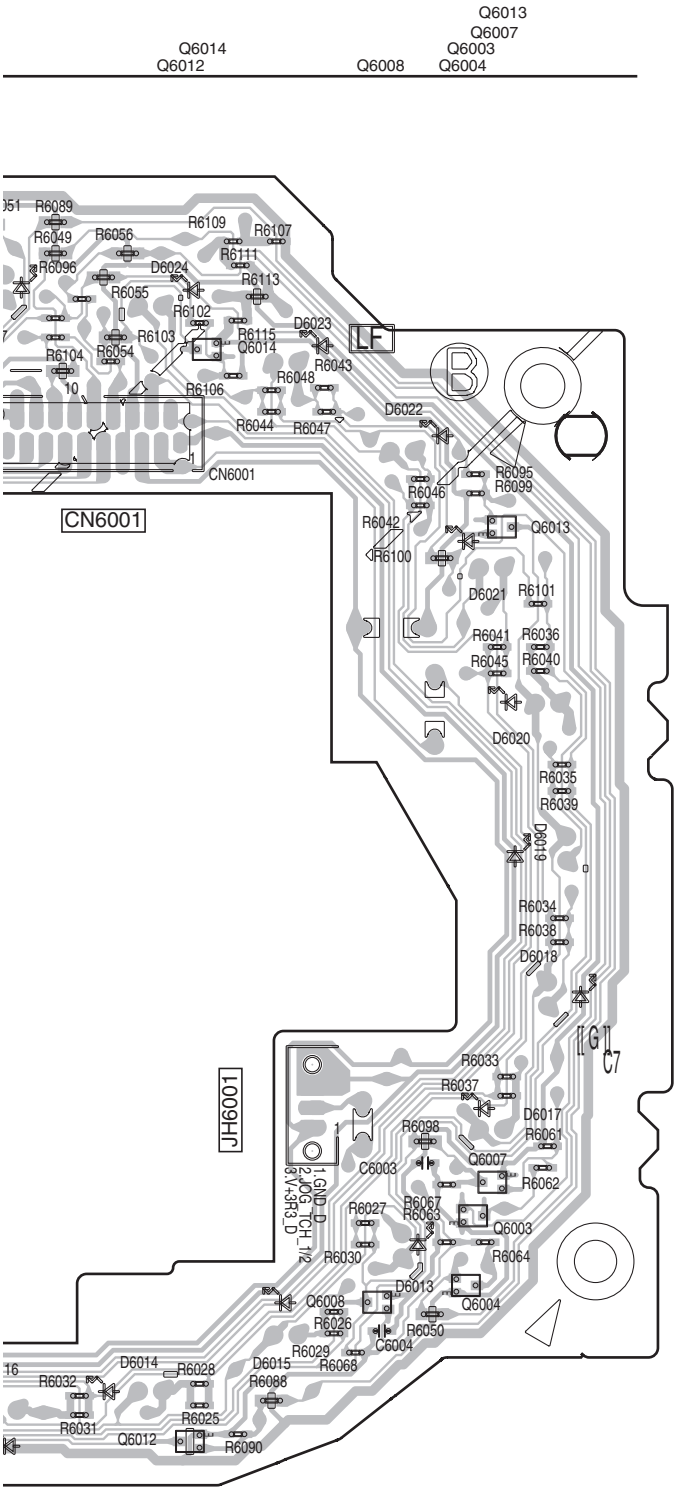

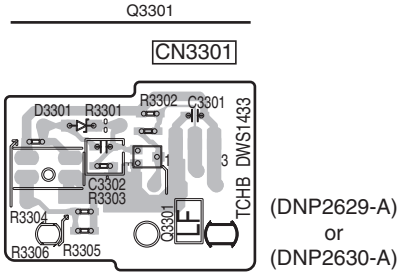

(DNP2629-A)
or
(DNP2630-A)

E TCHB ASSY

11.6 CDJ1B ASSY

SIDE A

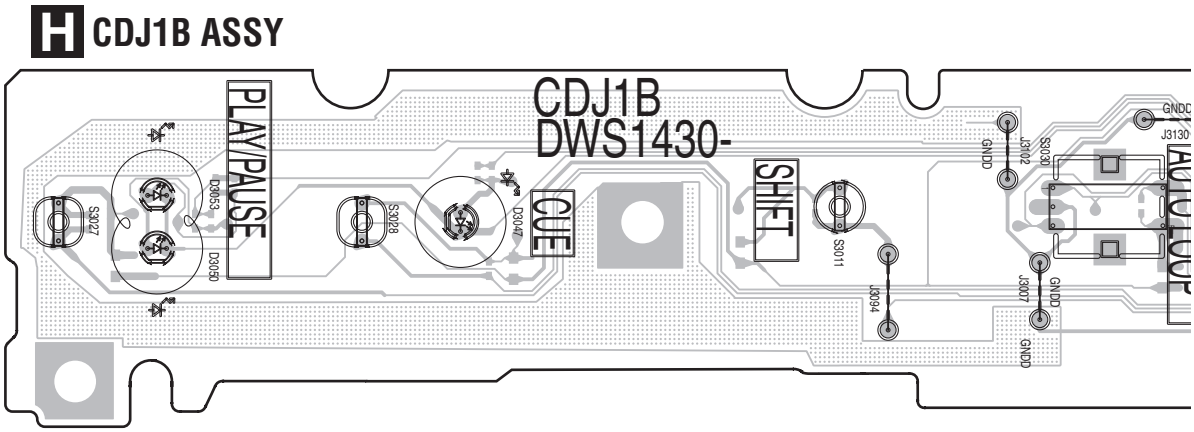

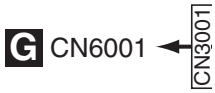

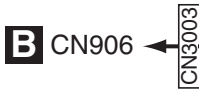

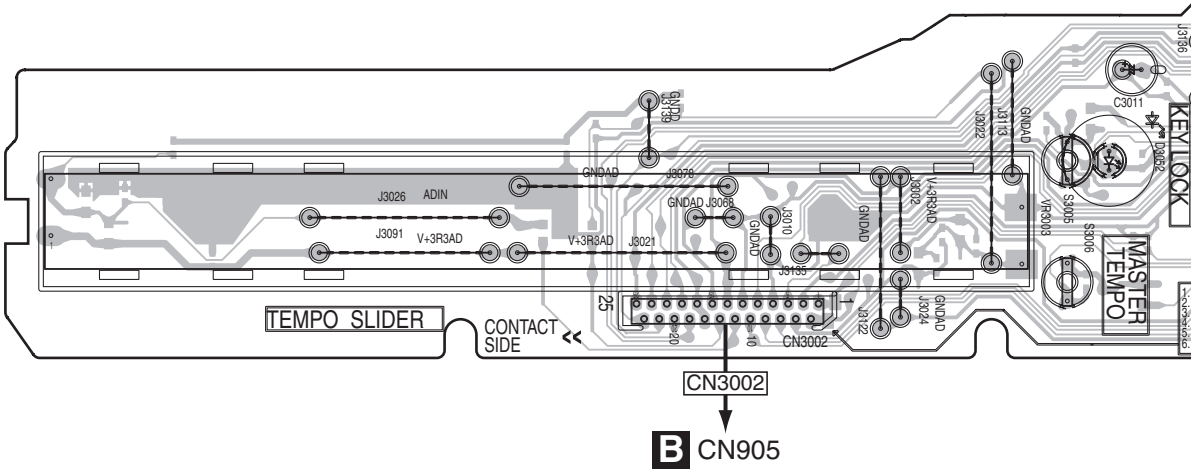

SIDE A

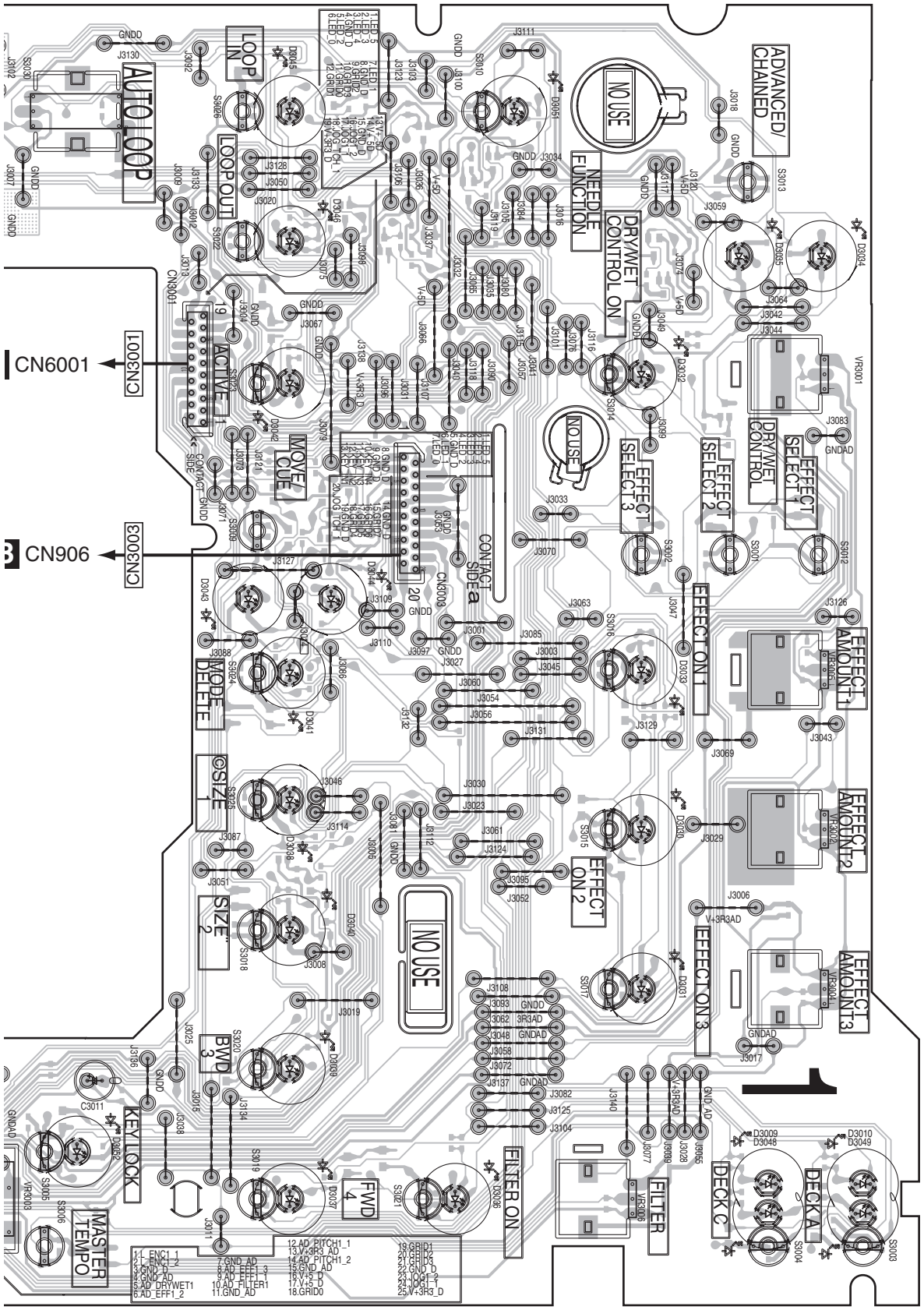

VR3001
VR3005
VR3002
VR3004
VR3006
VR3003

(DNP2629-A)

SIDE B

H CDJ1B ASSY

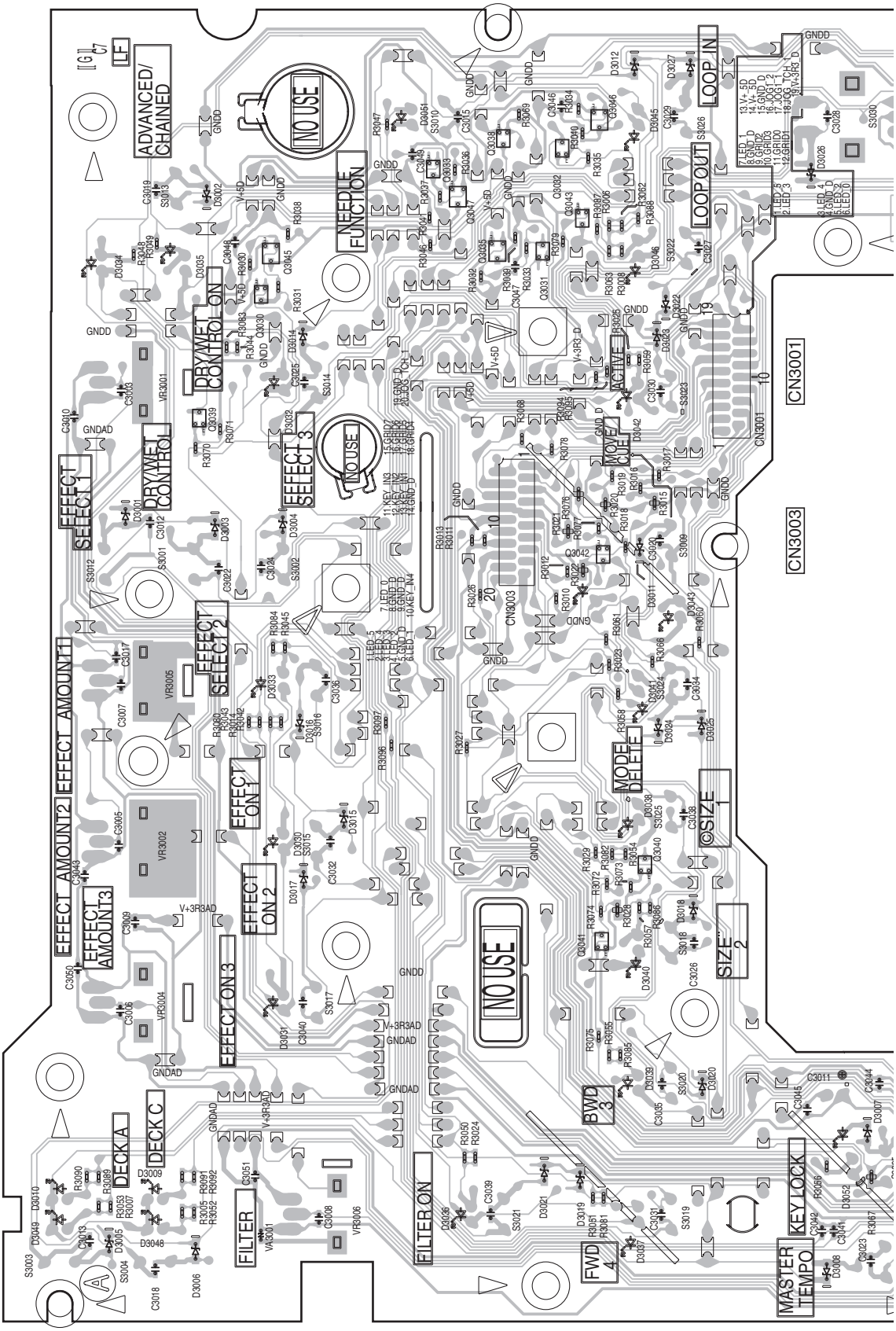

SIDE B

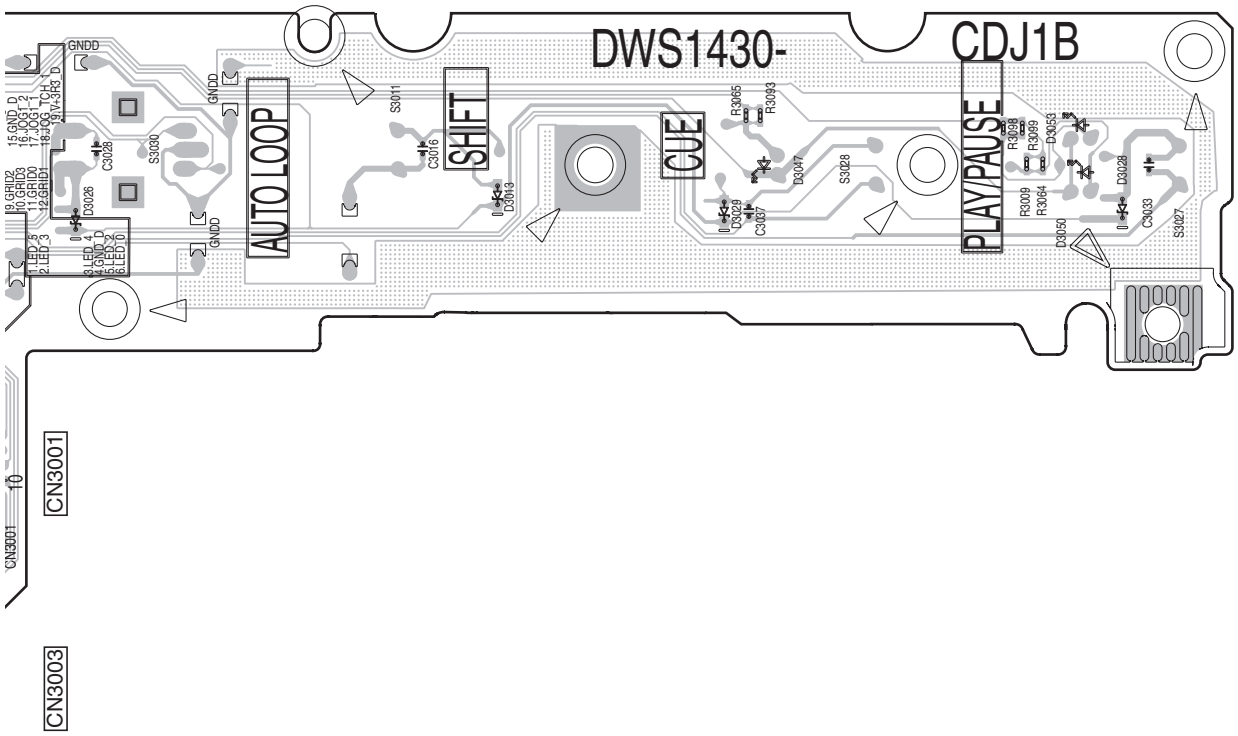

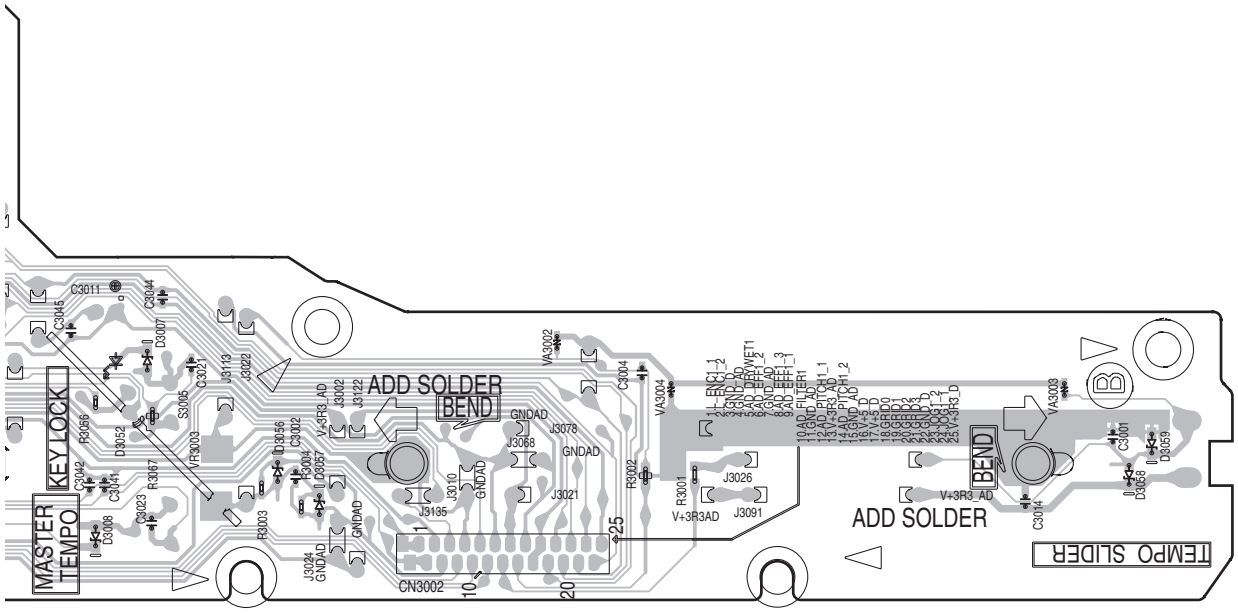

CN3002

(DNP2629-A)

11.7 CDJ2B ASSY

SIDE A

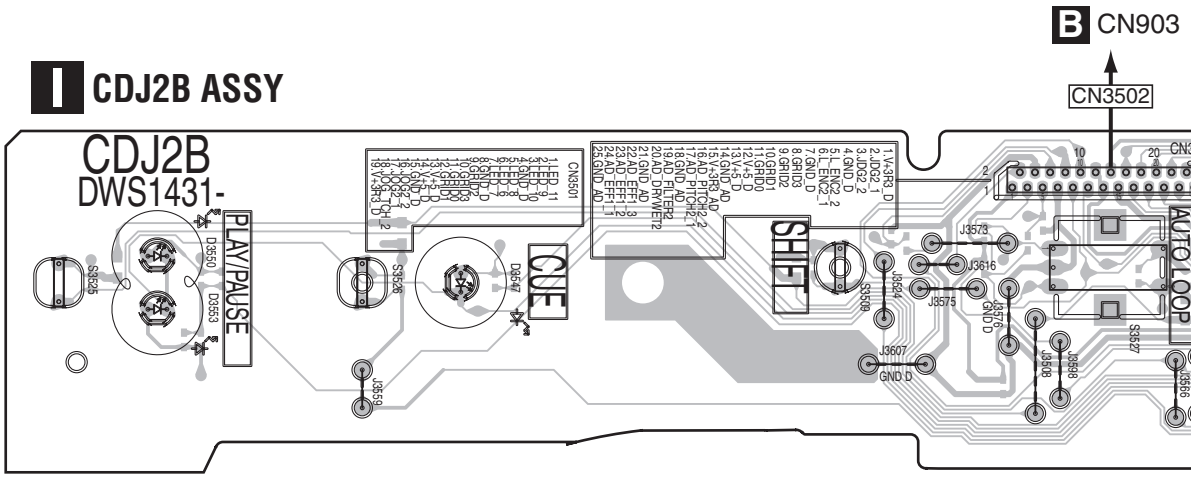

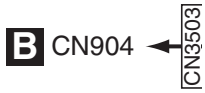

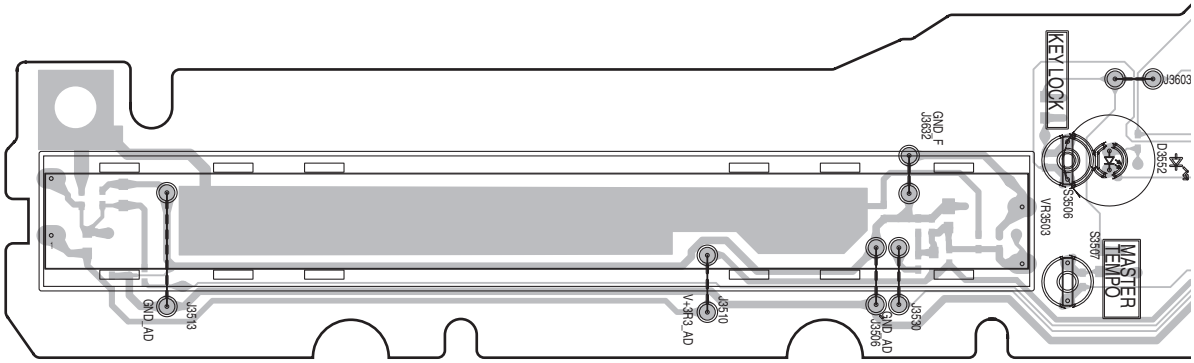

SIDE A

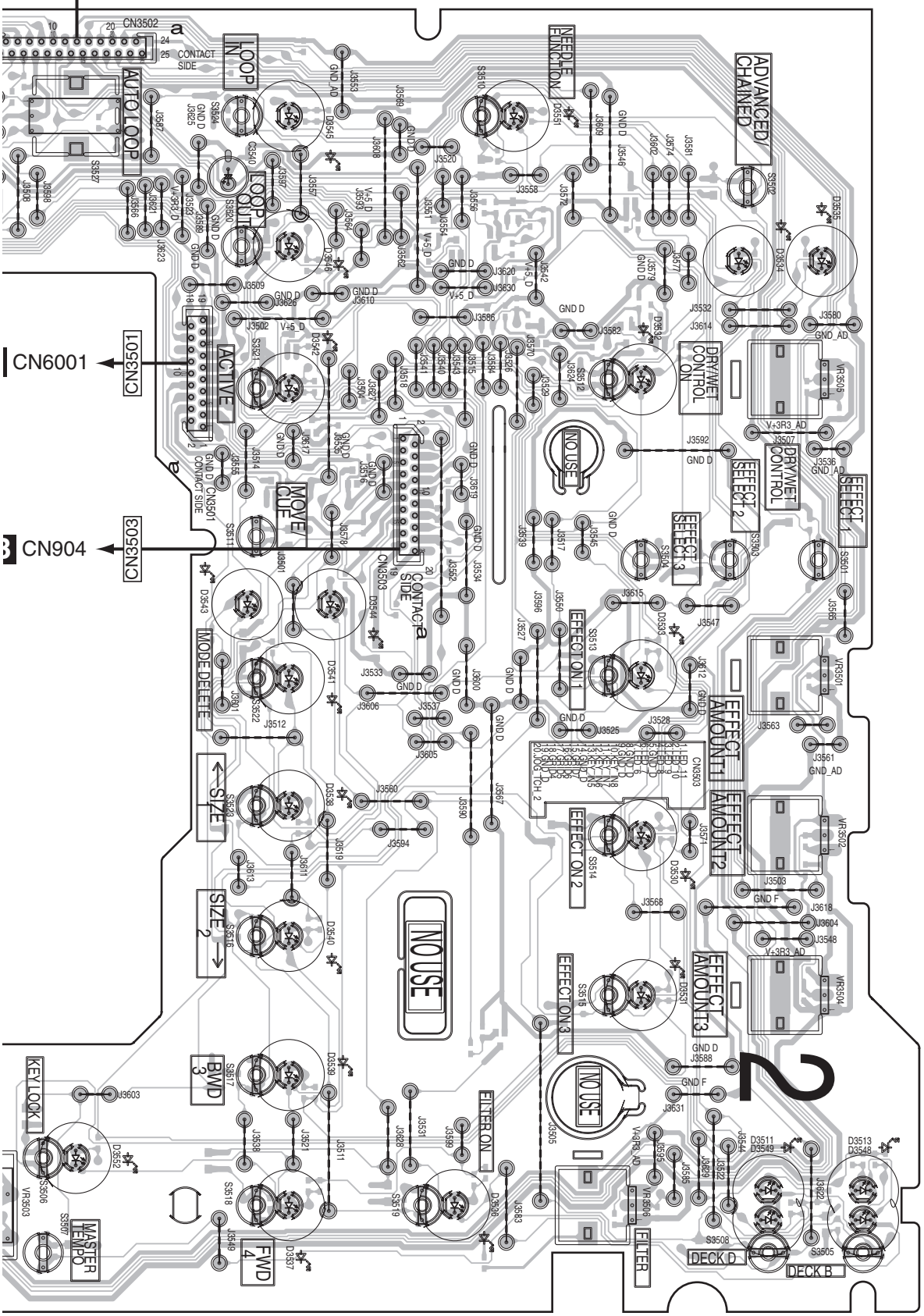

(DNP2630-A)

SIDE B

CDJ2B ASSY

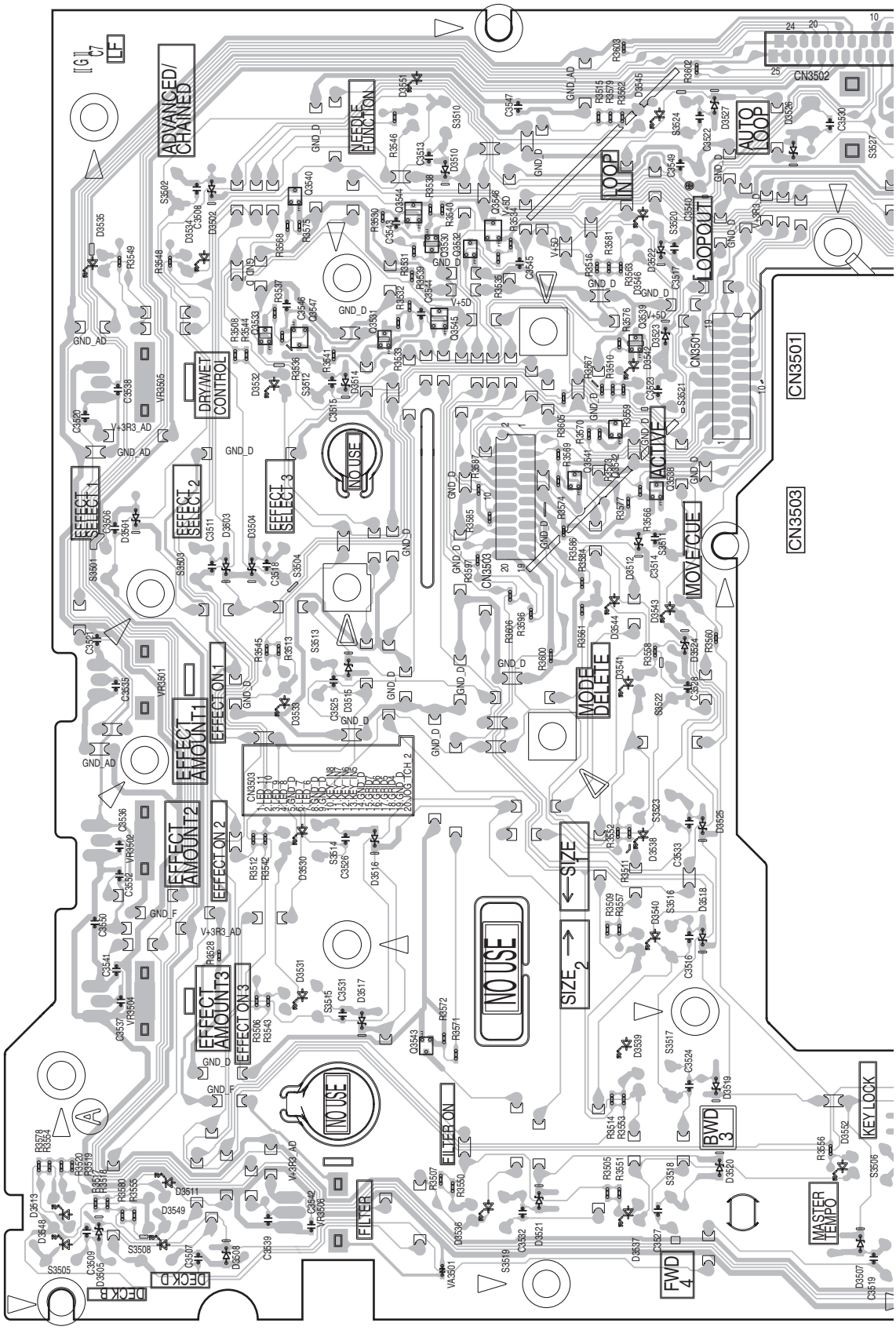

SIDE B

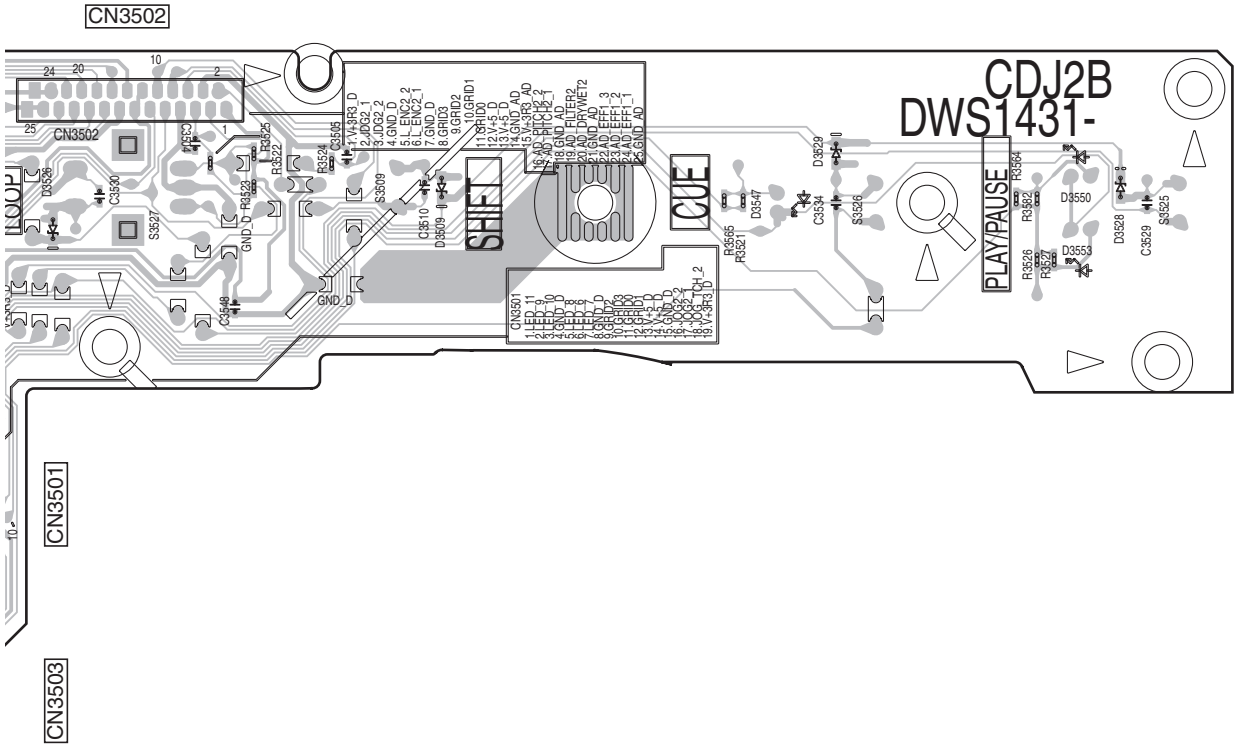

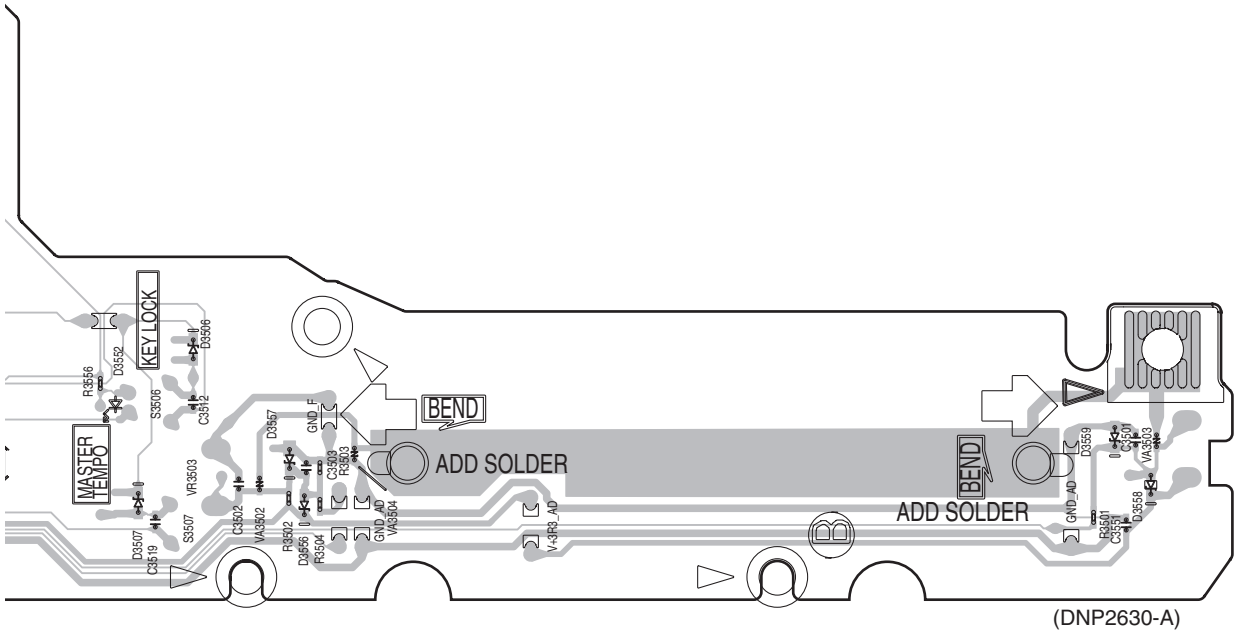

(DNP2630-A)

11.8 DJMB ASSY

SIDE A

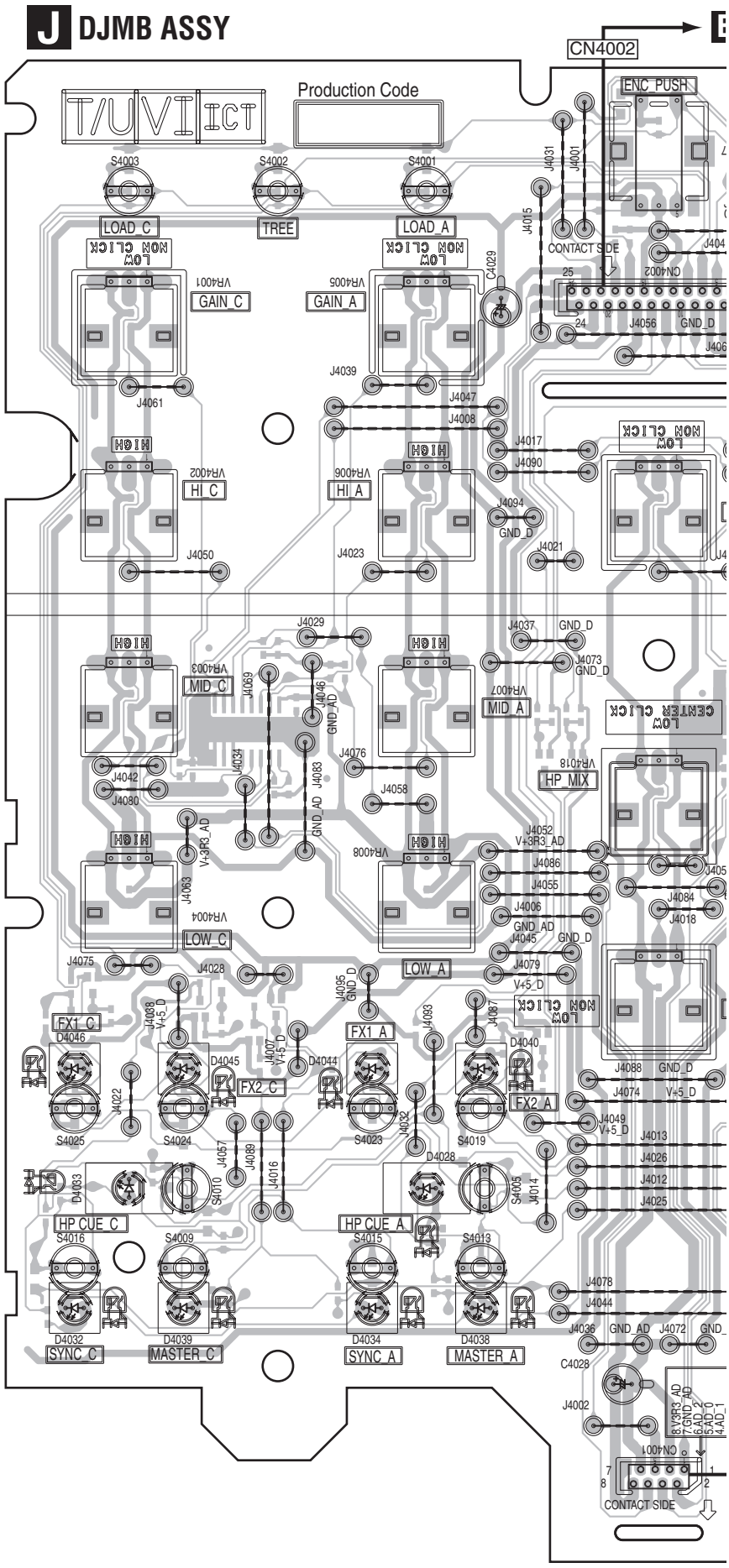

SIDE A

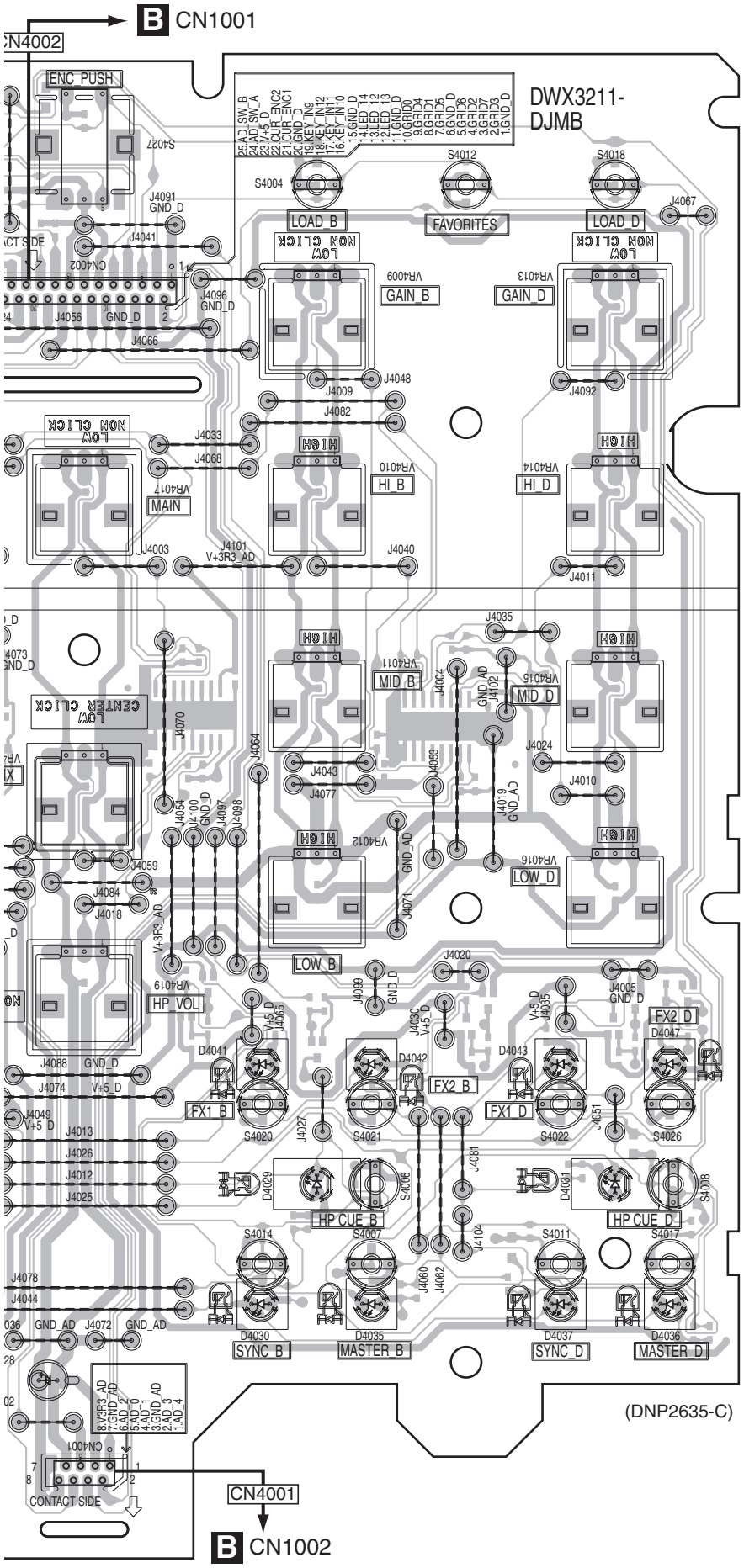

VR4001 VR4009
VR4005 VR4013

VR4002 VR4010
VR4006 VR4014
VR4017

VR4003 VR4011
VR4007 VR4015

VR4018

VR4004 VR4012
VR4008 VR4016

VR4019

SIDE B

J DJMB ASSY

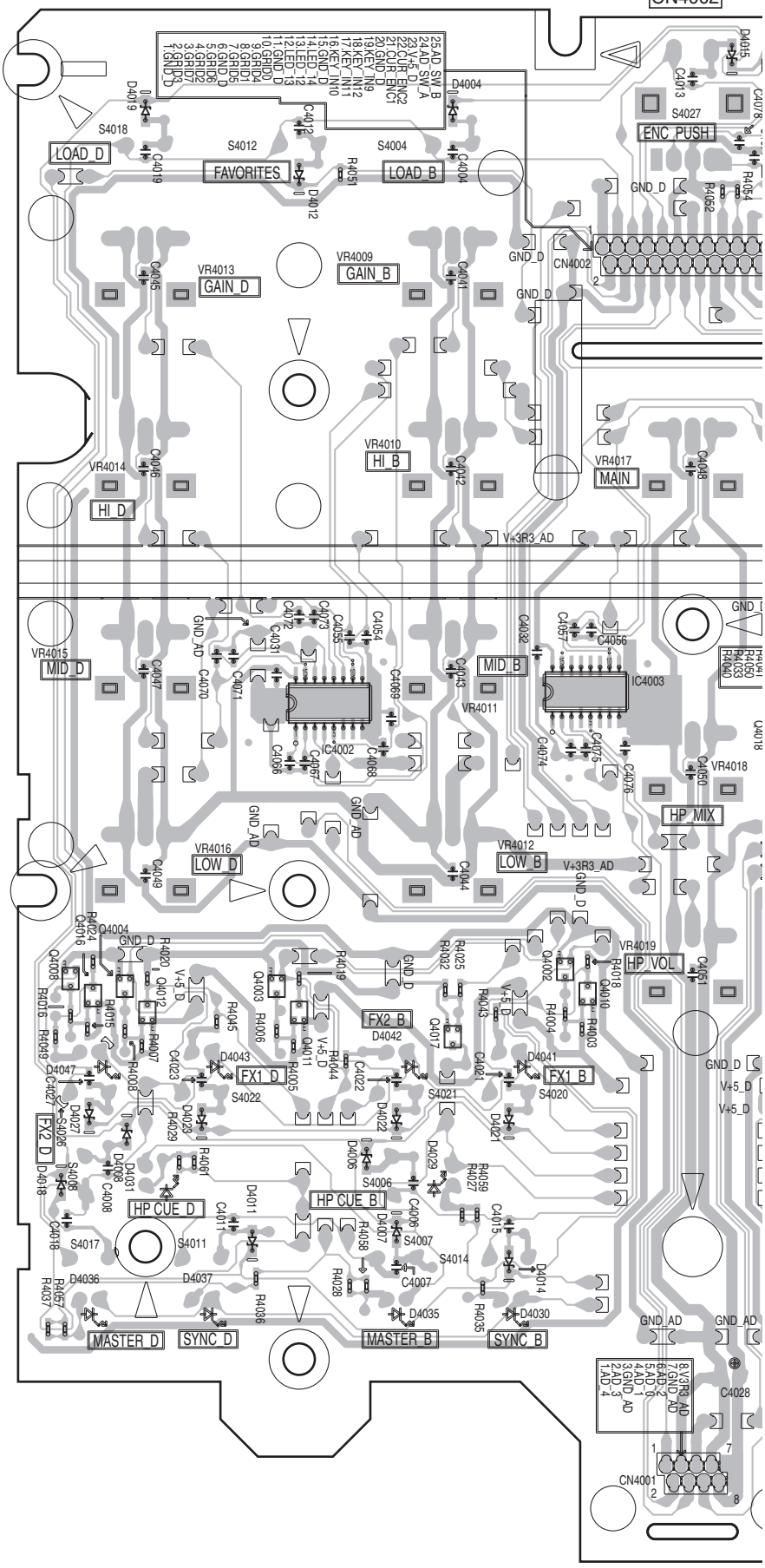

SIDE B

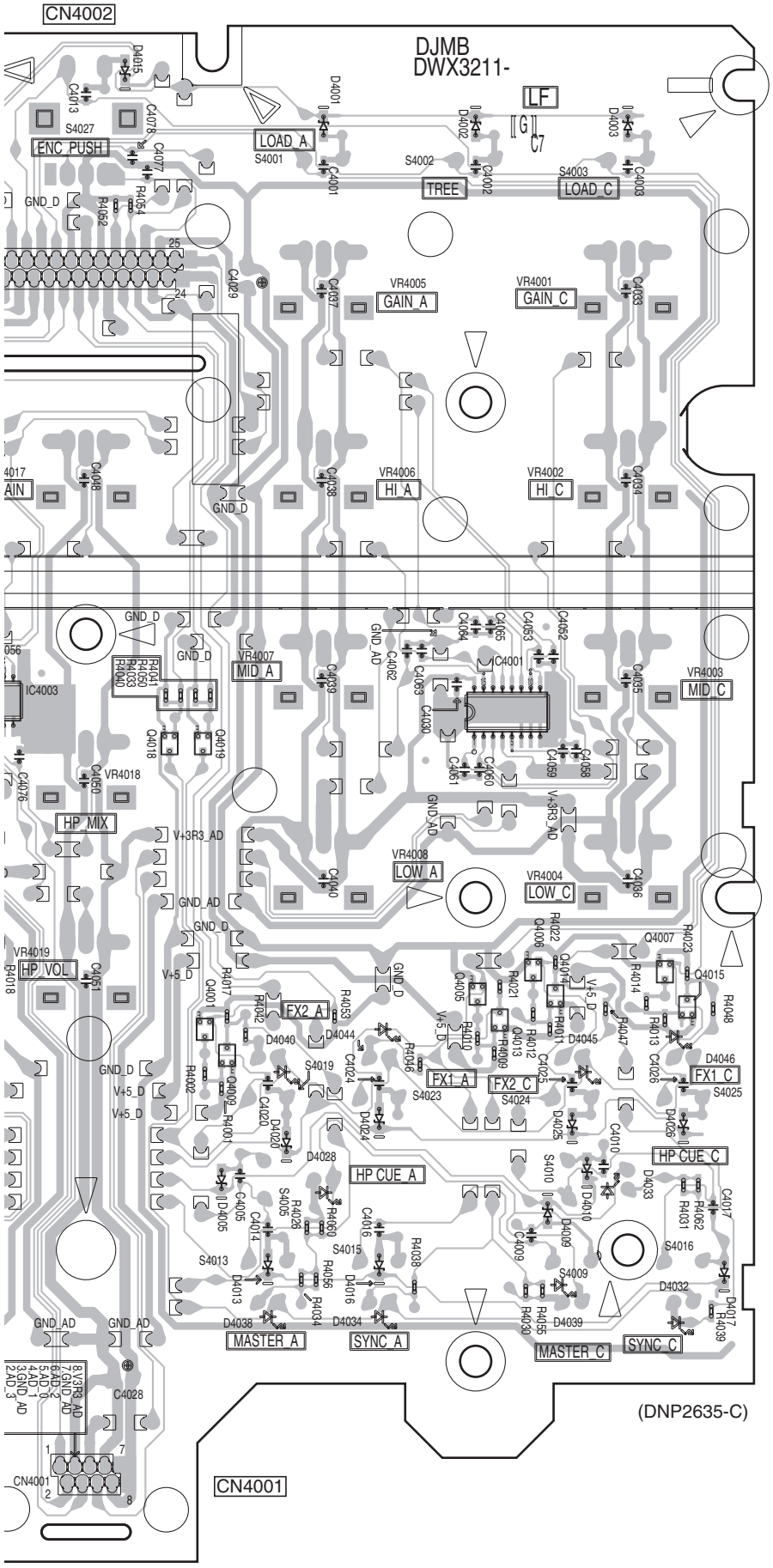

IC4002
IC4003
IC4001

Q4018
Q4019

Q4008 Q4002 Q4006 Q4007
Q4003
Q4004 Q4010 Q4005 Q4014
Q4016 Q4015
Q4012 Q4011 Q4013
Q4001
Q4017
Q4009

11.9 CHFD and CRFD ASSYS

SIDE A

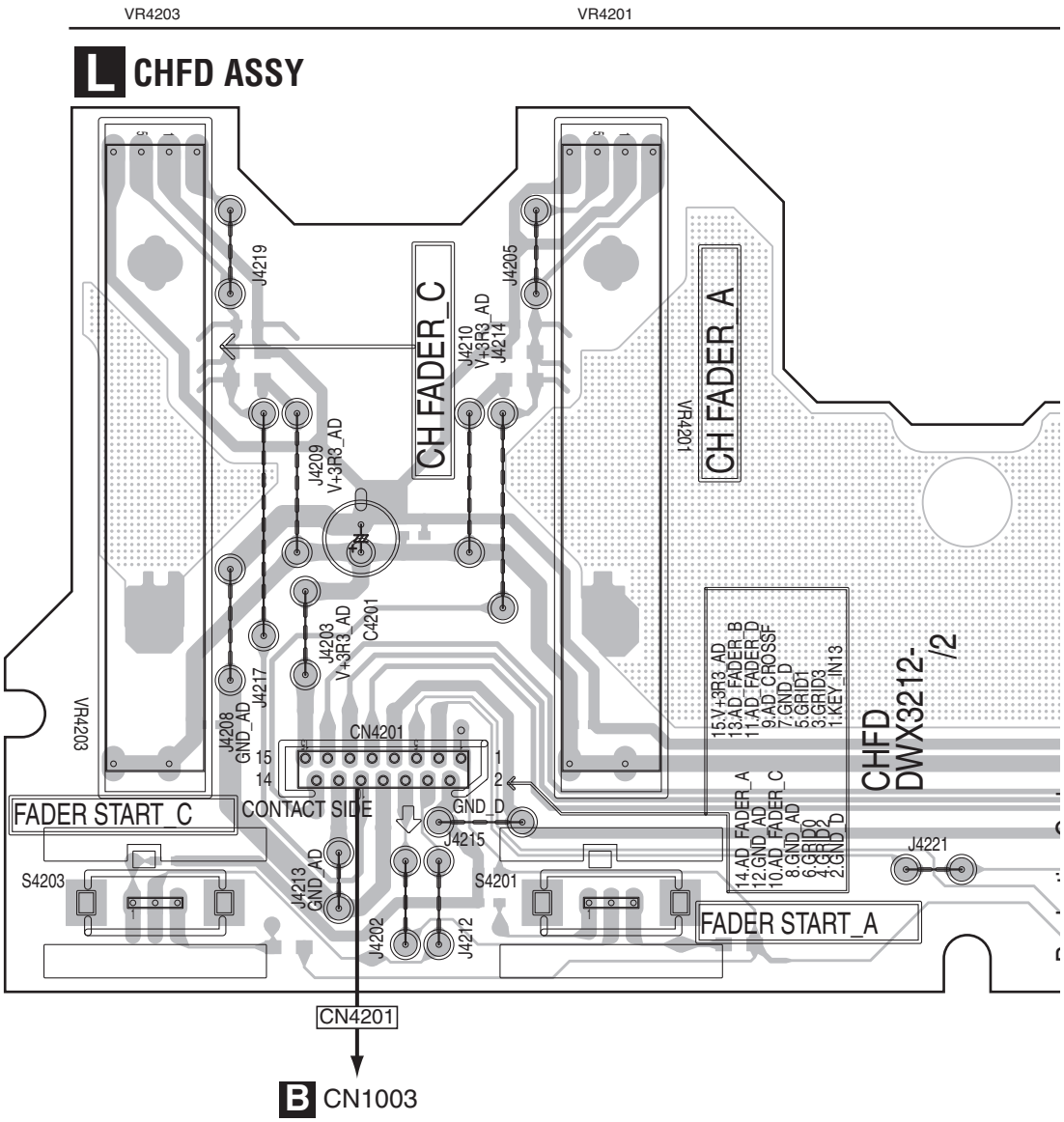

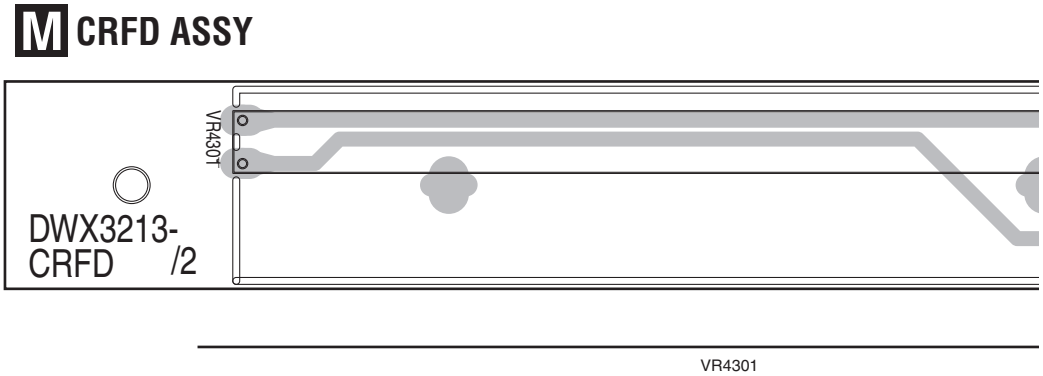

SIDE A

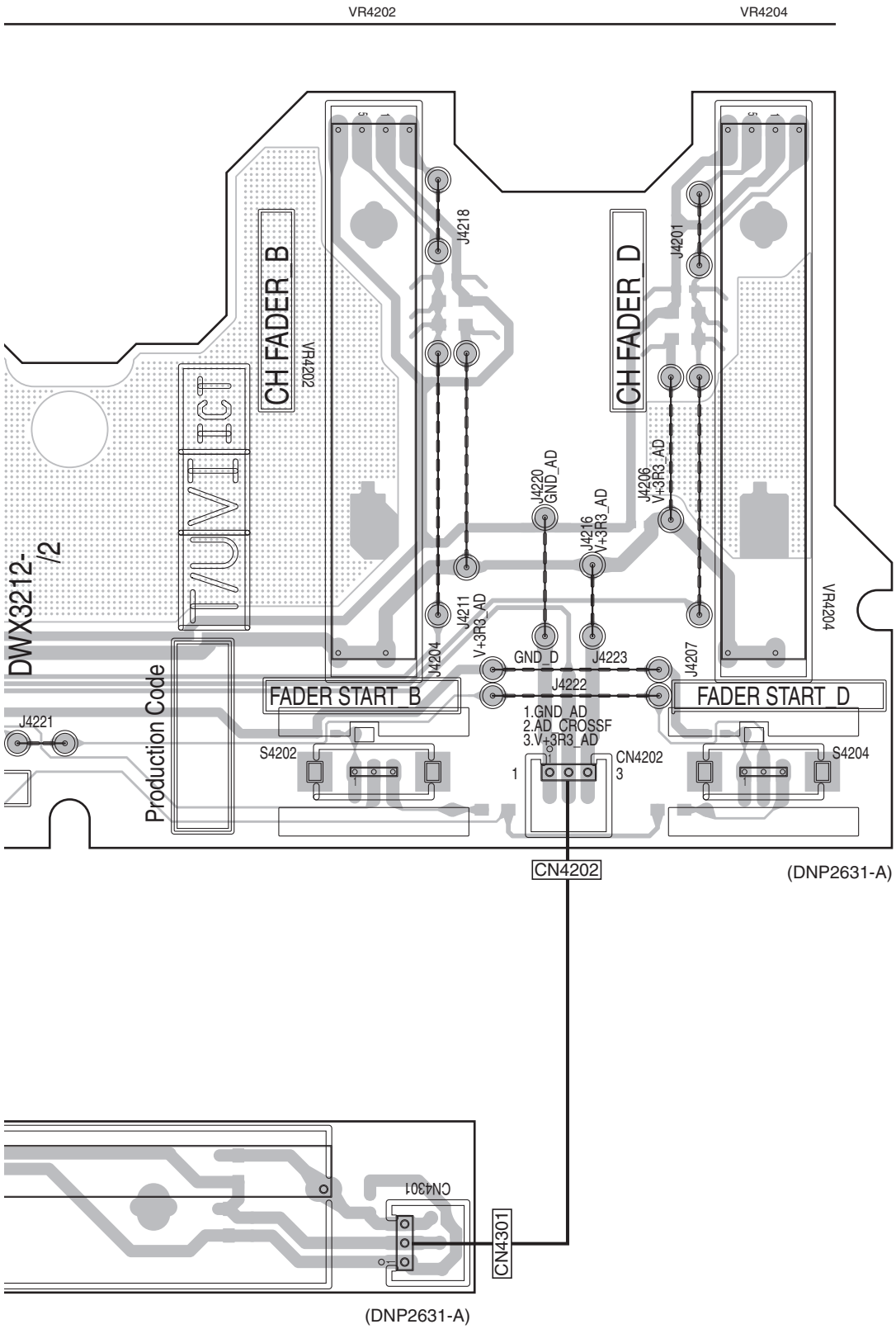
VR4202
VR4204
CH FADER_B
CH FADER_D
J4218
J4201
J4220
GND_AD
J4216
V+3R3_AD
J4206
V+3R3_AD
J4211
V+3R3_AD
J4204
J4207
GND_D
J4223
J4222
FADER START_B
FADER START_D
J4221
S4202
S4204
1.GND_AD
2.AD_CROSSF
3.V+3R3_AD
CN4202
1
3
DWX3212-
/2
Production Code
CN4202
(DNP2631-A)
CN4301
CN4301
(DNP2631-A)

SIDE B

L CHFD ASSY

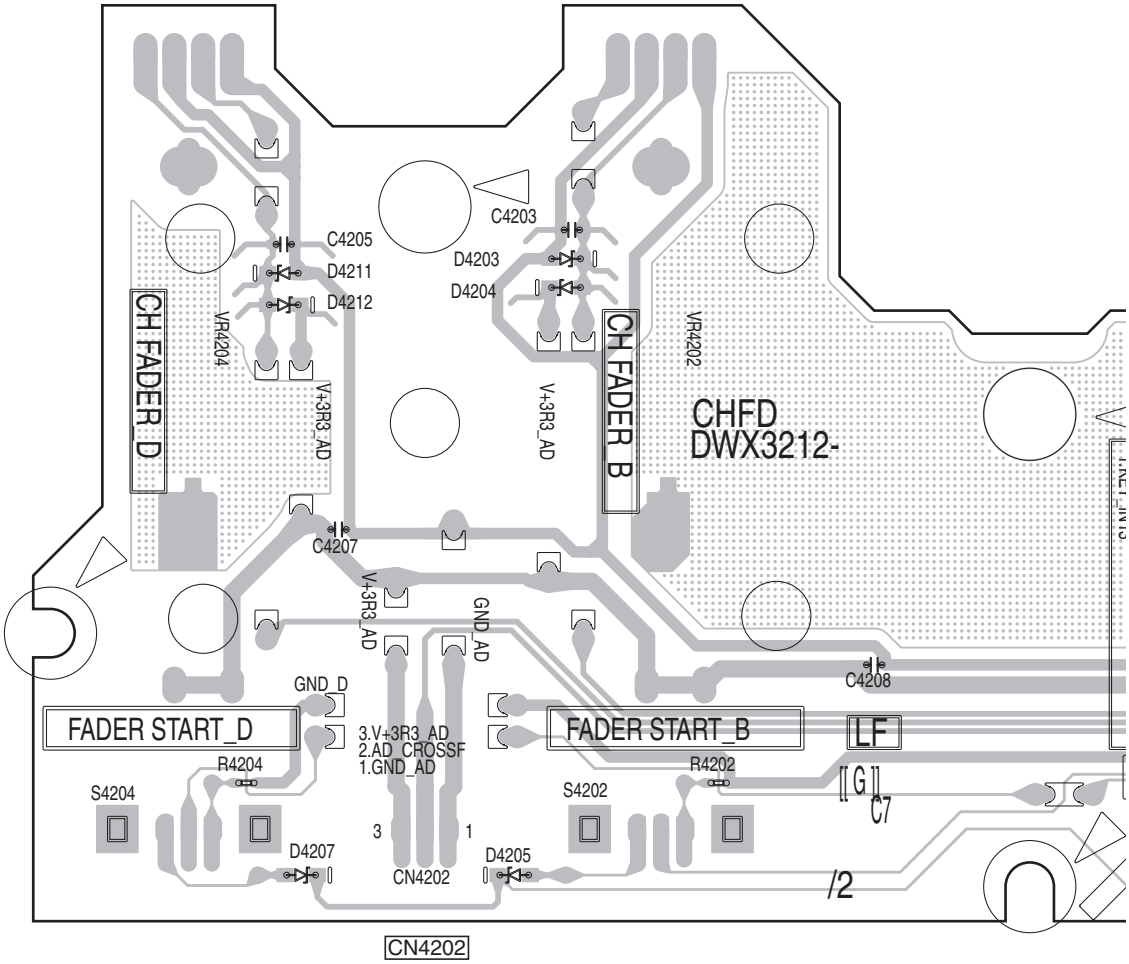

M CRFD ASSY

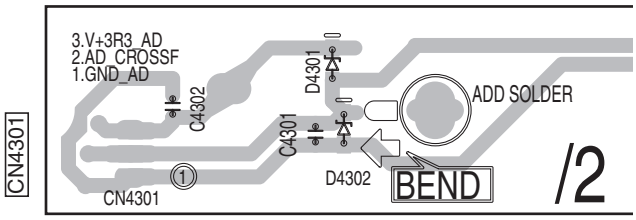

SIDE B

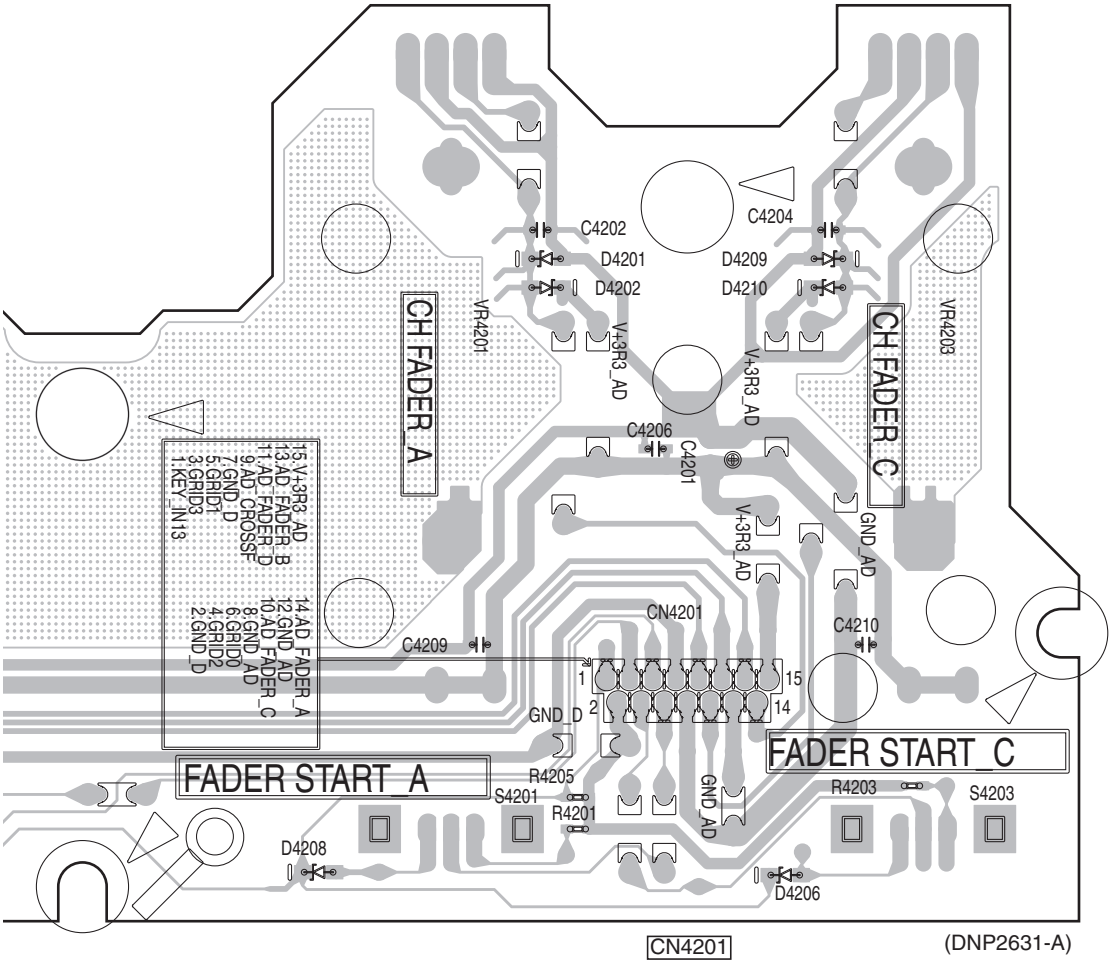

CN4201

(DNP2631-A)

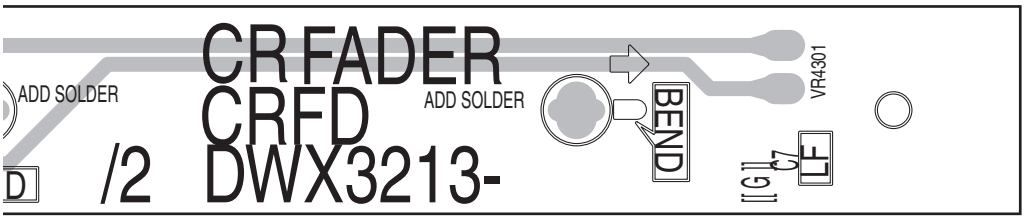

(DNP2631-A)

11.10 MICB ASSY

SIDE A **SIDE A**

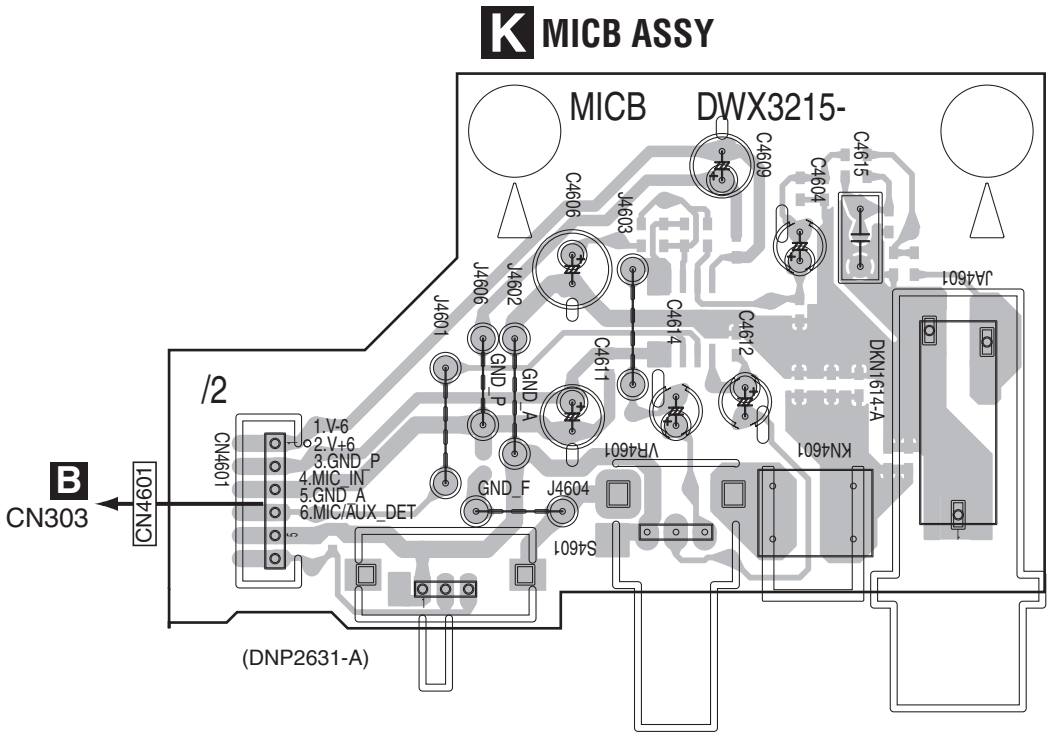

VR4601

SIDE B **SIDE B**

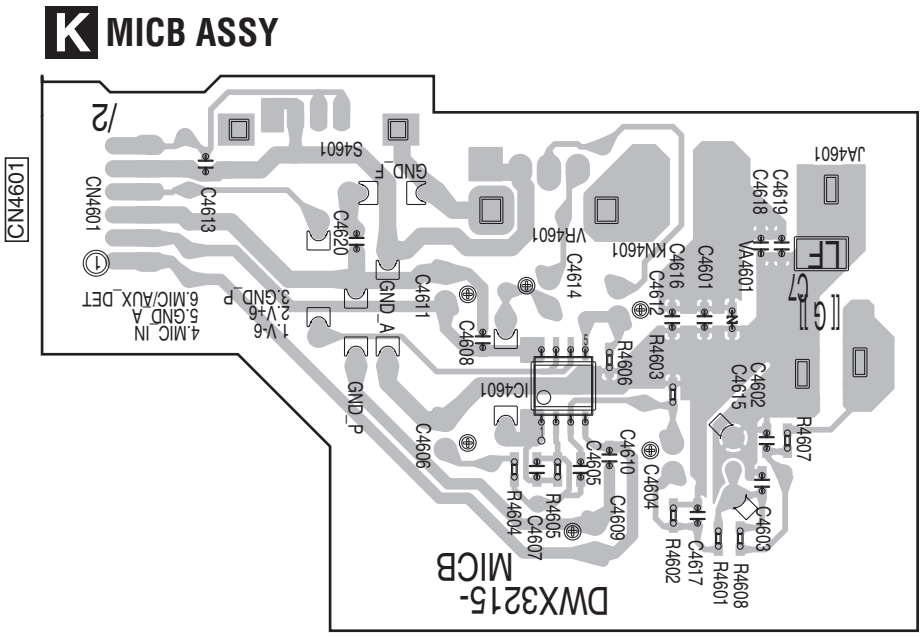

IC4601

11.11 HPJK ASSY

SIDE A

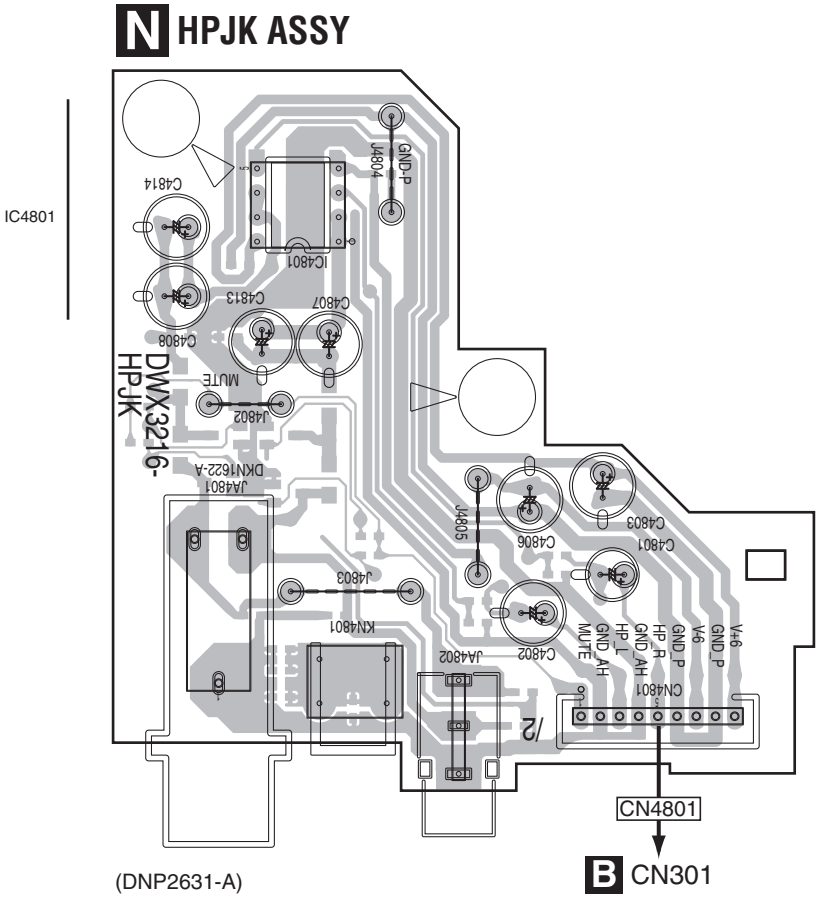

(DNP2631-A)

SIDE A

SIDE B

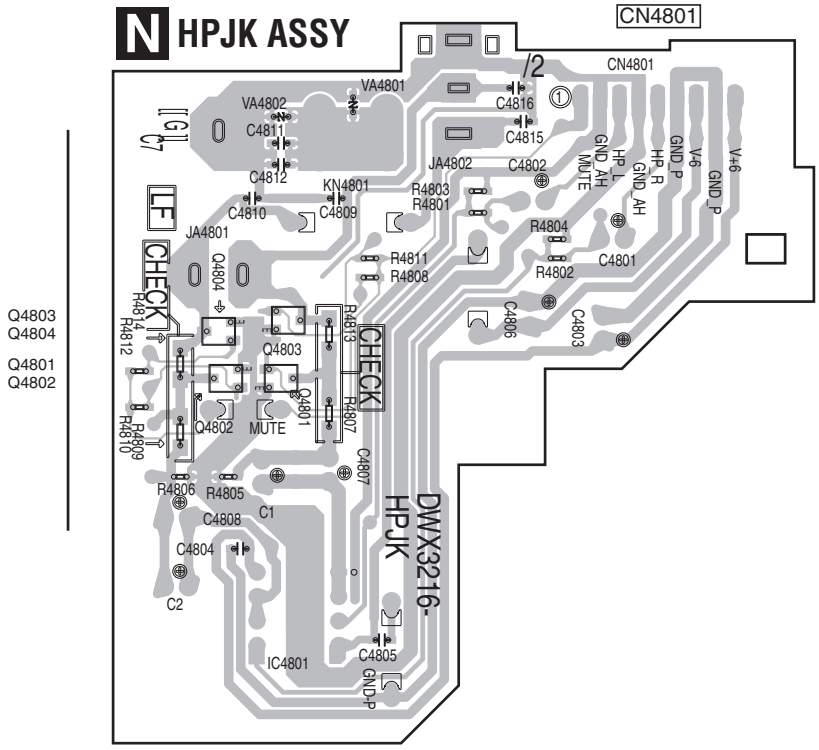

(DNP2631-A)

SIDE B

11.12 USBB ASSY

SIDE A

SIDE A

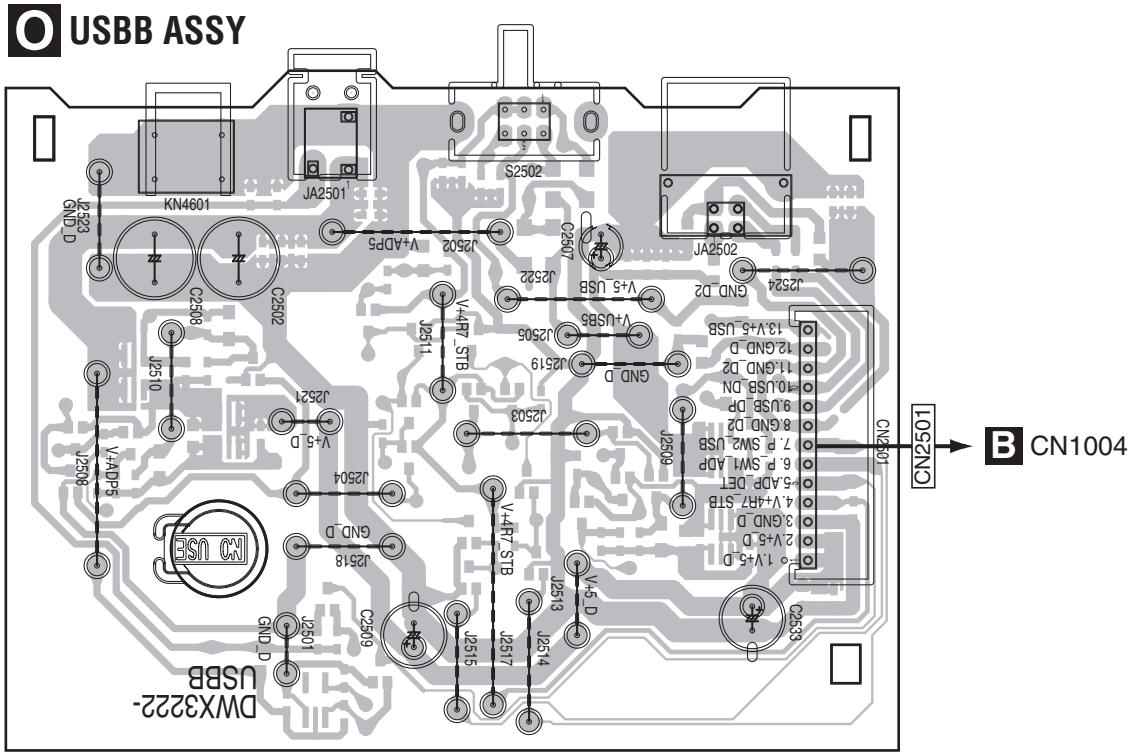

(DNP2635-C)

SIDE B

SIDE B

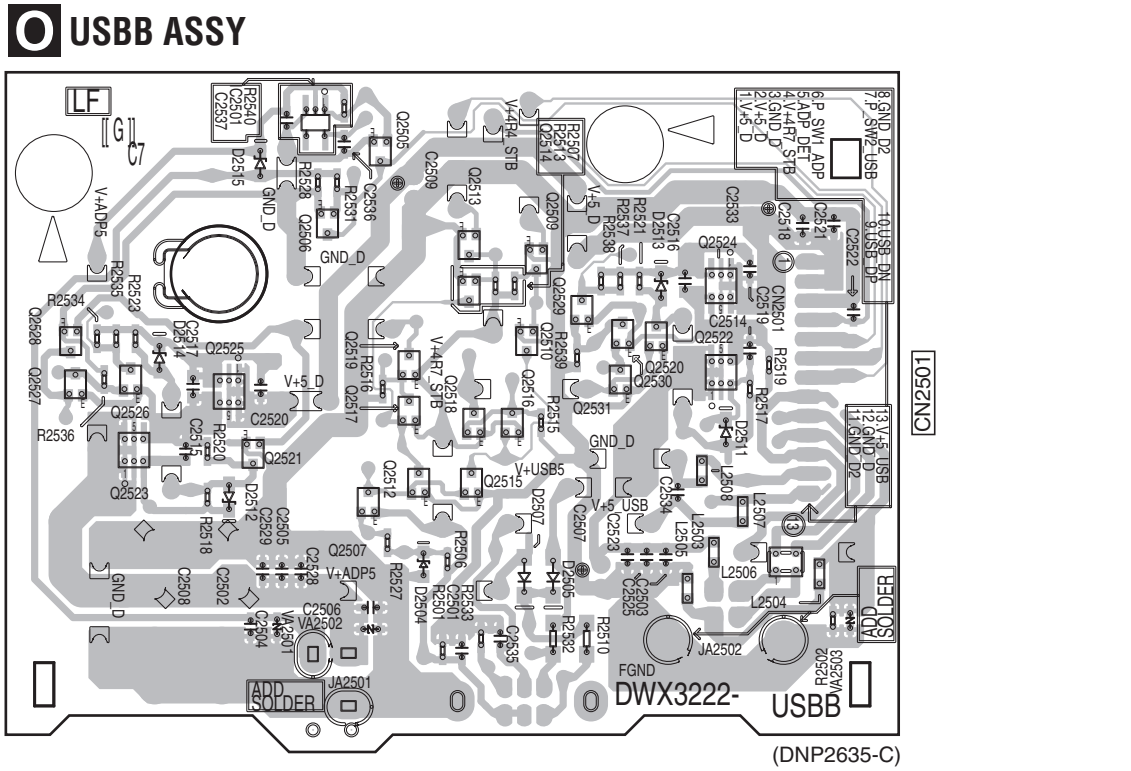

(DNP2635-C)

Q2528
Q2527 Q2526 Q2525 IC2501 Q2505 Q2513 Q2509 Q2530 Q2520 Q2524
Q2523 Q2521 Q2506 Q2519 Q2514 Q2510 Q2529 Q2531 Q2522
Q2517 Q2518 Q2516
Q2507 Q2512 Q2515

12. PCB PARTS LIST

NOTES: ● *Parts marked by "NSP" are generally unavailable because they are not in our Master Spare Parts List.*

● *The ⚠ mark found on some component parts indicates the importance of the safety factor of the part. Therefore, when replacing, be sure to use parts of identical designation.*

● *When ordering resistors, first convert resistance values into code form as shown in the following examples.*

Ex.1 When there are 2 effective digits (any digit apart from 0), such as 560 ohm and 47 k ohm (tolerance is shown by J = 5%, and K = 10%).

560 Ω	→	56×10^1	→	561	RD1/4PU 5 6 1 J
47 kΩ	→	47×10^3	→	473	RD1/4PU 4 7 3 J
0.5 Ω	→	R50			RN2H R 5 0 K
1 Ω	→	1R0			RS1P 1 R 0 K

Ex.2 When there are 3 effective digits (such as in high precision metal film resistors).

5.62 kΩ	→	562×10^1	→	5621	RN1/4PC 5 6 2 1 F

● *Meaning of the figures and others in the parentheses in the parts list.*

Example) IC 301 is on the point (face A, 91 of x-axis, and 111 of y-axis) of the corresponding PC board.
IC 301 (A, 91, 111) IC NJM2068V

LIST OF ASSEMBLIES

Mark	No.	Description	Part No.
NSP	1..	MAIN ASSY	DWM2421
	2..	UCOM ASSY	DWX3209
	2..	CDCB 1 ASSY	DWX3210
	2..	CDCB 2 ASSY	DWX3224
NSP	1..	CDJ1 ASSY	DWM2422
	2..	CDJ1B ASSY	DWS1430
	2..	JOGB ASSY	DWS1432
	2..	TCHB ASSY	DWS1433
	2..	LEDB ASSY	DWS1434
NSP	1..	CDJ2 ASSY	DWM2423
	2..	CDJ2B ASSY	DWS1431
	2..	JOGB ASSY	DWS1432
	2..	TCHB ASSY	DWS1433
	2..	LEDB ASSY	DWS1434
NSP	1..	DJM1 ASSY	DWM2424
	2..	CHFD ASSY	DWX3212
	2..	CRFD ASSY	DWX3213
	2..	MICB ASSY	DWX3215
	2..	HPJK ASSY	DWX3216
NSP	1..	DJM2 ASSY	DWM2426
	2..	DJMB ASSY	DWX3211
	2..	JACB ASSY	DWX3214
	2..	USBB ASSY	DWX3222

* Either the CDCB 1 Assy or CDCB 2 Assy is assembled here. The CDCB 1 Assy and CDCB 2 Assy are interchangeably used and handled similarly in their production management.

A JACB ASSY

Mark	No.	Description	Part No.
		SEMICONDUCTORS	
	IC	4401,4402	NJM4565MD
	IC	4403-4405	NJM4580MD
	Q	4401-4412	INC2002AC1
		MISCELLANEOUS	
	L	4401-4404 INDUCTOR	CTF1378
	JA	4401,4403 PIN JACK (2P)	AKB7181
	JA	4402,4404 HEADPHONE JACK	DKN1622
	KN	4401 SCREW PLATE	VNE1948
	VR	4401 POTENTIOMETER	DCS1115
	CN	4401 L-PLUG (9P)	KM200NA9L
	CN	4402 L-PLUG (7P)	KM200NA7L
	CN	4403 CONNECTOR	B2PS-VH
	VA	4401-4404 VARISTORS	EZJZ1V270RM
		RESISTORS	
	R	4401,4402	RS1/10SR1102D
	R	4403,4404	RS1/10SR1001D
	R	4405-4408	RS1/10SR1202D
	R	4409,4429-4432,4464	RS1/10SR5600D
	R	4410,4463,4467,4474	RS1/10SR4301D
	R	4413-4420	RS1/10SR4701D
	R	4421,4423,4425,4427	RS1/10SR1002D
	R	4422,4424,4426,4428	RS1/10SR9101D
	R	4445,4447,4453,4455	RS1/10SR1200D
	R	4468,4473	RS1/10SR5600D
		Other Resistors	RS1/10SR###J
		CAPACITORS	
	C	4401	CCSRCH102J50
	C	4402-4405,4422-4429	CCSRCH101J50
	C	4406,4408,4420,4421	CEJQ101M16
	C	4407,4410,4416,4418	CEJQ470M16
	C	4412-4415	CEJQ100M35
	C	4430,4431,4438-4443	CEJQ101M16
	C	4444-4449	DCE1016
	C	4457,4460,4462	CKSRYB103K50
	C	4458	CKSRYB104K16

B UCOM ASSY

Mark	No.	Description	Part No.
		SEMICONDUCTORS	
⚠	IC	101	BD9851EFV
⚠	IC	102,104,105	S-1200B33-M5
⚠	IC	103	S-1200B50-M5
	IC	106	S-80927CNMC-G8X
	IC	201	S-24CS64A0I
	IC	202	TUSB3200ACPAH
	IC	203	TC7SB66FU
	IC	205	S-80942CNMC-G9C
	IC	301,302	NJM2121MD
	IC	303	AK5358AET

Mark	No.	Description	Part No.
	IC 304,506		AK4387ET
	IC 305		NJM4565MD
	IC 501		NJM4580MD
	IC 701		PEG850A8-K
	IC 702		TC74VHC238FK
	IC 1101,1102		TC74LCX541FK
⚠	Q 101		RTQ025P02
⚠	Q 102		RTQ045N03
	Q 103,106		LSA1576UB
	Q 104,203,301		RT1N241M
	Q 105,202,501,581		LSC4081UB
	Q 201		RT3N22M
	Q 302,303,503,504		INC2002AC1
	Q 502,505,582		LTC124EUB
	Q 506,509,583		LTA124EUB
	Q 507,508		INC2002AC1
	Q 701		RT3P22M
	D 101,102		RB160L-40
	D 103-105		1SS352
	D 301,303		1SS302
	D 302		RKZ3.3KG(B2)
	D 304,305,501,502		HSU119
	D 701,702		RB160M-30

MISCELLANEOUS

	L 101,102	POWER INDUCTOR	ATH7047
	L 201,202	CHIP BEEDS FILTER	BTX1042
	L 203	COIL	ATH7015
	L 206	CHIP BEEDS FILTER	BTX1042
	L 501-504	CHIP INDUCTOR (10U)	DTL1105
	L 701-704	CHIP BEEDS FILTER	BTX1042
	KN 1003,1004	EARTH METAL FITTING	VNF1109
	KN 1006	EARTH METAL FITTING	VNF1109
	X 201	CRYSTAL RESONATOR (6.0 MHz)	DSS1136
	X 701	CERAMIC OSCILLATOR	CSS1616
	CN 301,501	CONNECTOR	AKM1295
	CN 302	CONNECTOR	AKM1293
	CN 303	CONNECTOR	AKM1292
	CN 901,902	CONNECTOR	AKM1294
	CN 903,905,1001	25P CONNECTOR	VKN1429
	CN 904,906	20P CONNECTOR	VKN1424
	CN 1002	8P CONNECTOR	VKN1300
	CN 1003	15P CONNECTOR	VKN1307
	CN 1004	CONNECTOR	AKM1299
	JP 501	CRIMP CONNECTOR	DKP3926

RESISTORS

Mark	No.	Description	Part No.
	R 101		RS1/10SR4701D
	R 102		RS1/10SR1202D
	R 103,114		RS1/10SR222J
	R 104		RS1/10SR1003D
	R 105,106		RS1/10SR1502D
	R 107,115		RS1/10SR153J
	R 108,116,131		RS1/10SR333J
	R 109		RS1/10SR1002D
	R 110,146		RS1/10SR562J
	R 111		RS1/10SR1802D
	R 112		RS1/10SR8202D
	R 113		RS1/10SR8201D
	R 120,147,230		RS1/8SQ0R0J
	R 121,122,128		RS1/10SR103J
	R 123,125,326		RS1/10SR223J
	R 124		RS1/10SR203J
	R 126		RS1/10SR273J
	R 127,130,139,325		RS1/10SR473J
	R 132-134,137,144		RS1/10SR103J
	R 135,141,143		RS1/10SR0R0J
	R 136		RS1/10SR101J
	R 138		RS1/10SR220J
	R 145		RS1/10SR332J
	R 212		RS1/16SS2701F
	R 215		RS1/16SS3900F
	R 255,306,524,525		RS1/10SR103J
	R 256,257		RS1/10SR221J
	R 301-304,340,720		RS1/10SR0R0J
	R 305,329		RS1/10SR470J
	R 309,319		RS1/10SR471J
	R 310		RAB4CQ103J
	R 311,512		RS1/10SR100J
	R 313,314		RS1/16SS8201D
	R 315,316		RS1/16SS6801D
	R 317,318		RS1/16SS1601D
	R 322-324,346,347		RS1/10SR104J
	R 336,337		RS1/16SS1001D
	R 338,339,501,502		RS1/16SS4701D
	R 341,342		RS1/10SR2401D
	R 343,344		RS1/10SR8200D
	R 505-508		RS1/16SS3301D
	R 509,510		RS1/16SS3901D
	R 523,526-528		RS1/10SR102J
	R 718,719,752,765		RAB4CQ220J
	R 721		RAB4CQ470J
	R 722-724,737,738		RAB4CQ221J
	R 741		RAB4CQ221J
	R 824		RAB4CQ220J
	R 1109-1111		RAB4CQ101J
	Other Resistors		RS1/16SS###J

CAPACITORS

Mark	No.	Description	Part No.
	C 101		CCSRCH561J50
	C 102		CKSRYB332K50
	C 103		CCSRCH820J50
	C 104,113,149		CCG1205
	C 105,110-112,114		CKSRYB105K10
	C 106,115,203,204		DCH1201
	C 108		CKSRYB222K50
	C 109		CCSRCH121J50
	C 117,141,144,335		CKSRYB103K50
	C 119,121,122,125		CKSRYB104K16
	C 120,123,124,137		CKSRYB105K10
	C 126,227		CKSSYB222K50
	C 130-135,140,143		CKSRYB104K16
	C 139		CCSRCH221J50
	C 142,503,506		CCSRCH471J50
	C 145,336,520		CCSRCH102J50
	C 147,225,312,313		CKSRYB104K16
	C 150		CKSRYB105K10
	C 205,206,211,213		CKSSYB104K16
	C 207,208,212		CCSSCH471J50
	C 210,702,713,750		DCH1201
	C 214,228,229,714		CCSSCH220J50

Mark	No.	Description	Part No.
C	215,219,221,226		CKSSYB104K16
C	216,318,716		CKSSYB103K16
C	217,218		CCSSCH470J50
C	220,715,718,719		CCSSCH101J50
C	222,707,708,711		CCSSCH102J50
C	223,224		CCSSCH270J50
C	231,232,701,703		CKSSYB104K16
C	305-307,316,326		CEVW100M16
C	308-311,328,329		CEVW470M16
C	315,317,319,513		CKSRYB104K16
C	320,321,504,505		CCSSCH681J50
C	322,323		CCSRCH391J50
C	327,331		CEVW100M16
C	330		CEVW470M6R3
C	332-334,337,338		CEVW470M16
C	340,342		CCSSCH821J50
C	341,514		CEVW470M16
C	509,510,554		CCH1565
C	511,516,517,1019		CEVW101M16
C	515,717,724		CKSRYB104K16
C	519		CKSRYB103K50
C	704,712,721,749		CKSSYB104K16
C	705,706		CKSSYB471K50
C	709,710		CCSSCH100D50
C	720		CCSSCH220J50
C	725-748,760,1020		CKSSYB103K16
C	752,759,762		CCSSCH102J50
C	755,923-930		DCH1201
C	756,1101,1110		CKSSYB104K16
C	1013-1018		DCH1201
C	1021		CKSSYB103K16

C CDCB 1 ASSY

SEMICONDUCTORS

IC	2001		AD7147ACPZ500RL7

RESISTORS

All Resistors			RS1/16SS###J

CAPACITORS

C	2001		CKSRYB103K50
C	2003		CKSRYB104K16
C	2005-2007		CCSSCH101J50
C	2009		DCH1201

D CDCB 2 ASSY

SEMICONDUCTORS

IC	2101		AD7147ACPZ500RL7

RESISTORS

All Resistors			RS1/16SS###J

CAPACITORS

C	2101		CKSRYB103K50
C	2103		CKSRYB104K16
C	2105-2107		CCSSCH101J50
C	2109		DCH1201

E TCHB ASSY

SEMICONDUCTORS

IC	3301		GP1S094HCZ0F
Q	3301		LSC4081UB
D	3301		HSU119

MISCELLANEOUS

CN	3301	3PJUMPER CONNECTOR	52151-0310

RESISTORS

All Resistors			RS1/10SR###J

CAPACITORS

C	3301		CKSRYB104K16

F JOGB ASSY

MISCELLANEOUS

CN	3201	CONNECTOR ASS'Y	PF04PG-B05

RESISTORS

All Resistors			RS1/10SR###J

MISCELLANEOUS

PC	3201	PHOTO INTERRUPTER	SEDS-7573

CAPACITORS

C	3201		CKSQYB225K10
C	3202,3203		CKSRYB103K50

G LEDB ASSY

SEMICONDUCTORS

Q	6001-6004		RT1N241M
Q	6005-6008		LSA1576UB
Q	6009-6014		2SC4154-11
D	6001-6024		SLI-343U3R(HJKL)

MISCELLANEOUS

CN	6001	19P CONNECTOR	VKN1279
CN	6002	L-PLUG (4P)	KM200NA4L
JH	6001	3P CABLE HOLDER	51048-0300
JP	6001	3P JUMPER WIRE	D20PDY0310E

RESISTORS

R	6049-6051,6053,6056		RS1/8SQ0R0J
R	6072-6075,6077,6079		RS1/8SQ0R0J
R	6088		RS1/8SQ472J
R	6089,6096,6098,6100		RS1/8SQ0R0J
R	6103,6105,6113		RS1/8SQ0R0J
Other Resistors			RS1/10SR###J

CAPACITORS

C	6001-6004		CKSRYB104K16

H CDJ1B ASSY

SEMICONDUCTORS

Q	3030-3033		RT1N241M
Q	3035,3045-3047		2SB1197K
Q	3038-3043		2SC4154-11
D	3001-3008,3011-3029		HSU119
D	3009,3010,3048-3050		SLI-343M8G(GHJ)
D	3030-3047		SLI-343Y8Y(KLM)
D	3051,3052		SLI-343U8R(HJK)
D	3053		SLI-343M8G(GHJ)

Mark	No.	Description	Part No.
	D	3056-3059	HSU119

MISCELLANEOUS

	VR	3001,3002,3004-3006 ROTARY VR	DCS1078
	VR	3003 VR	DCV1009
	S	3001,3002,3012 TACT SWITCH	DSG1079
	S	3003-3006,3009-3011 TACT SWITCH	DSG1089
	S	3013 TACT SWITCH	DSG1089
	S	3014-3026 TACT SWITCH	DSG1079
	S	3027,3028 TACT SWITCH	DSG1117
	S	3030 ENCODER	DSX1082
	CN	3001 19P CONNECTOR	VKN1250
	CN	3002 25P CONNECTOR	VKN1256
	CN	3003 20P CONNECTOR	VKN1251

RESISTORS

	R	3001,3002,3015	RS1/8SQ0R0J
	R	3020-3022,3028,3067	RS1/8SQ0R0J
	R	3076	RS1/8SQ472J
	Other Resistors		RS1/10SR###J

CAPACITORS

	C	3001-3003,3005-3008	CKSRYB103K50
	C	3009,3010,3014,3017	CKSRYB104K16
	C	3011	CEJQ101M16
	C	3041,3042	CKSRYB103K50
	C	3043,3046-3051	CKSRYB104K16

I CDJ2B ASSY

SEMICONDUCTORS

	Q	3530-3533	RT1N241M
	Q	3538-3543	2SC4154-11
	Q	3544-3547	2SB1197K
	D	3501-3510,3512	HSU119
	D	3511,3513,3548-3550	SLI-343M8G(GHJ)
	D	3514-3529,3556-3559	HSU119
	D	3530-3547	SLI-343Y8Y(KLM)
	D	3551,3552	SLI-343U8R(HJK)
	D	3553	SLI-343M8G(GHJ)

MISCELLANEOUS

	VR	3501,3502,3504-3506 ROTARY VR	DCS1078
	VR	3503 VR	DCV1009
	S	3501,3503,3504 TACT SWITCH	DSG1079
	S	3502,3505-3511 TACT SWITCH	DSG1089
	S	3512-3524 TACT SWITCH	DSG1079
	S	3525,3526 TACT SWITCH	DSG1117
	S	3527 ENCODER	DSX1082
	CN	3501 19P CONNECTOR	VKN1250
	CN	3502 25P CONNECTOR	VKN1256
	CN	3503 20P CONNECTOR	VKN1251

RESISTORS

	R	3600	RS1/8SQ0R0J
	Other Resistors		RS1/10SR###J

CAPACITORS

	C	3501,3502,3504,3505	CKSRYB103K50
	C	3520,3521,3541-3547	CKSRYB104K16
	C	3535-3539	CKSRYB103K50
	C	3540	CEJQ101M16
	C	3550-3552	CKSRYB104K16

J DJMB ASSY

SEMICONDUCTORS

	IC	4001-4003	TC74HC4052AF
	Q	4001-4008	RT1N241M
	Q	4009-4016	LSA1576UB
	Q	4017-4019	2SC4154-11
	D	4001-4027	HSU119
	D	4028-4034,4037	SLI-343Y8Y(KLM)
	D	4035,4036,4038,4039	SLI-343U8R(HJK)
	D	4040-4047	SLI-343Y8Y(KLM)

MISCELLANEOUS

	VR	4001,4005,4009,4013 ROTARY VR	DCS1117
	VR	4002-4004,4006-4008 ROTARY VR	DCS1078
	VR	4010-4012,4014-4016 ROTARY VR	DCS1078
	VR	4017,4019 ROTARY VR	DCS1117
	VR	4018 ROTARY VR	DCS1116
	S	4001,4003,4004,4007 TACT SWITCH	DSG1089
	S	4002,4005,4006,4008 TACT SWITCH	DSG1079
	S	4009,4011,4013-4018 TACT SWITCH	DSG1089
	S	4010,4012,4019-4026 TACT SWITCH	DSG1079
	S	4027 ROTARY SW	YSD5019
	CN	4001 8P CONNECTOR	VKN1239
	CN	4002 25P CONNECTOR	VKN1256

RESISTORS

	All Resistors		RS1/10SR###J

CAPACITORS

	C	4028,4029	CEJQ470M16
	C	4030-4057	CKSRYB104K16
	C	4058-4076	CKSRYB103K50

K MICB ASSY

SEMICONDUCTORS

	IC	4601	NJM4565MD

MISCELLANEOUS

	JA	4601 MIC JACK	DKN1614
	KN	4601 SCREW PLATE	VNE1948
	VR	4601 POTENTIOMETER	DCS1111
	S	4601 SLIDE SWITCH	DSH1025
	CN	4601 PLUG (6P)	KM200NA6
	VA	4601 VARISTORS	EZJZ1V270RM

RESISTORS

	R	4601	RS1/10SR2201D
	R	4602	RS1/10SR1002D
	R	4604	RS1/10SR1101D
	R	4605	RS1/10SR6802D
	Other Resistors		RS1/10SR###J

CAPACITORS

	C	4601,4618	CCSRCH102J50
	C	4602	CCSRCH561J50
	C	4604,4612,4614	CEJQ100M35
	C	4605	CCSRCH331J50
	C	4606	CEJQ101M16
	C	4609,4611	CEJQ470M16

Mark	No.	Description	Part No.
	C 4613		CKSRYB103K50
	C 4615		CFTLA103J50
	C 4616		CKSRYB104K16
	C 4619,4620		CCSRCH101J50

L CHFD ASSY

SEMICONDUCTORS

	D 4201-4212	HSU119

MISCELLANEOUS

	VR 4201-4204 VARIABLE RESISTOR	DCV1024
	S 4201-4204 SLIDE SWITCH	ASH1039
	CN 4201 15P CONNECTOR	VKN1246
	CN 4202 L-PLUG (3P)	KM200NA3L

RESISTORS

	All Resistors	RS1/10SR###J

CAPACITORS

	C 4201	CEJQ101M16
	C 4202-4205	CKSRYB103K50
	C 4206-4210	CKSRYB104K16

M CRFD ASSY

SEMICONDUCTORS

	D 4301,4302	HSU119

MISCELLANEOUS

	VR 4301 VARIABLE RESISTOR	DCV1023
	CN 4301 L-PLUG (3P)	KM200NA3L

CAPACITORS

	C 4301	CKSRYB103K50
	C 4302	CKSRYB104K16

N HPJK ASSY

SEMICONDUCTORS

	IC 4801	NJM4556AD
	Q 4801-4804	INC2002AC1

MISCELLANEOUS

	JA 4801 HEADPHONE JACK	DKN1622
	JA 4802 CONNECTOR	CKS4124
	KN 4801 SCREW PLATE	VNE1948
	CN 4801 PLUG (9P)	KM200NA9
	VA 4801 VARISTORS	EZJZ1V270RM

RESISTORS

	R 4807,4809	RS1/4SA270J
	R 4813,4814	RS1/4SA130J
	Other Resistors	RS1/10SR###J

CAPACITORS

	C 4801-4803,4806	CEHAR470M16
	C 4807,4808,4813,4814	CEHAR101M10
	C 4809,4810,4815,4816	CKSRYB473K16
	C 4811	CKSRYB103K50

O USBB ASSY

SEMICONDUCTORS

	Q 2506	2SC4154-11
	Q 2507	LSA1576UB
	Q 2509,2510,2512-2515	RT1N141M-11
	Q 2516-2519,2526,2527	RT1P141M
	Q 2520,2521,2528,2531	RT1N141M-11
	Q 2522-2525	RTQ040P02
	Q 2529,2530	RT1P141M
	D 2504	UDZS5R6(B)
	D 2505,2507	RB160M-30
	D 2511-2514	HSU119
	D 2515	UDZS3R6(B)

MISCELLANEOUS

	L 2503,2504 CHIP BEEDS FILTER	BTX1042
	L 2506 COIL	DTH1197
	L 2507,2508 CHIP BEEDS FILTER	BTX1042
	JA 2501 DCIN JACK	DKN1523
	JA 2502 USB CONNECTOR	DKN1237
	KN 4601 SCREW PLATE	VNE1948
	S 2502 SLIDE SWITCH	ASG1100
	CN 2501 L-PLUG (13P)	KM200NA13L
	VA 2501,2502 VARISTORS	EZJZ1V270RM

RESISTORS

	R 2510,2532	RS1/4SA0R0J
	Other Resistors	RS1/10SR###J

CAPACITORS

	C 2501,2503-2506,2514	CKSRYB103K50
	C 2502,2508	CEJQNP470M25
	C 2507	CEJQ100M35
	C 2509,2533	CEHAZL121M10
	C 2515,2535	CKSRYB103K50
	C 2516,2517	DCH1201
	C 2519	CKSRYB474K16
	C 2520	CKSRYB224K16
	C 2521,2522,2534	CKSRYB105K16
	C 2523,2528	CCSRCH102J50
	C 2525,2529	CKSRYB104K16